ARVIN Industries Model 8092, Chassis 1.48300, and Model 8093, Chassis 1.48600

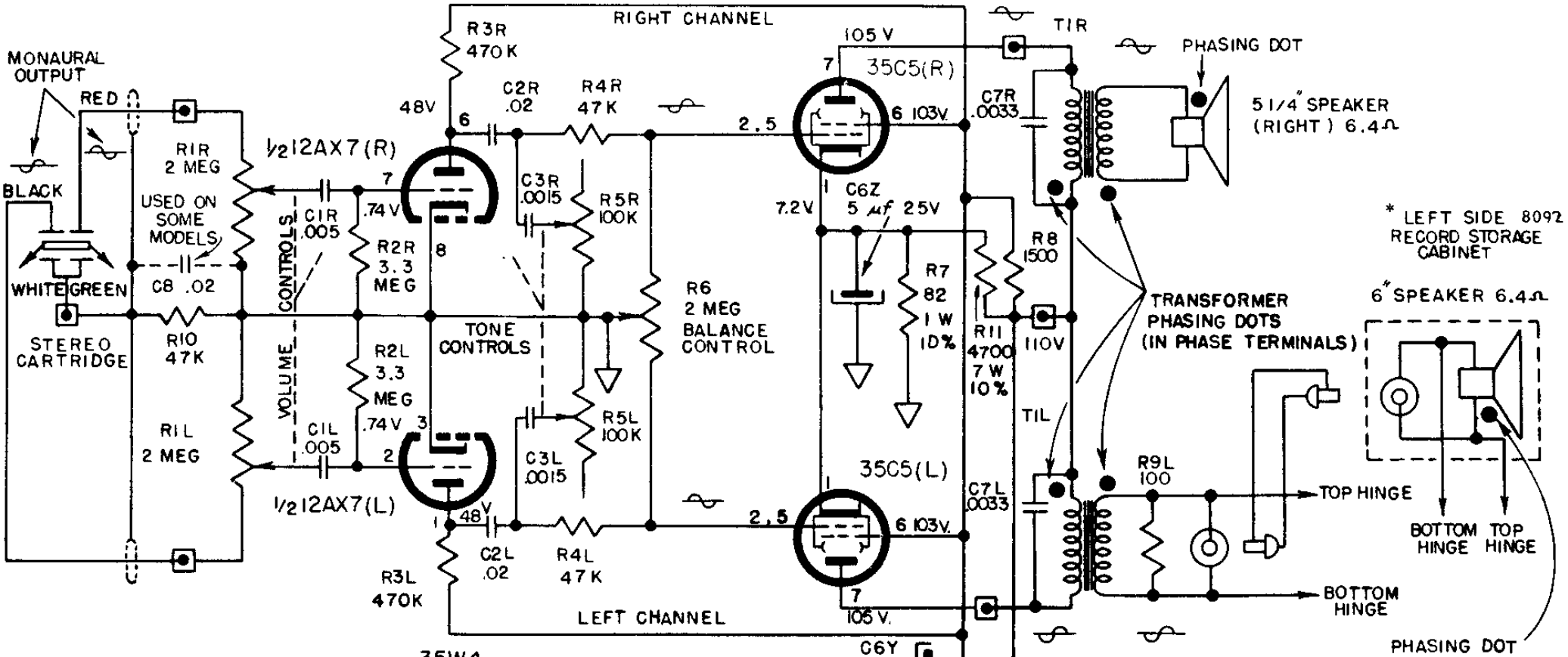

* 8093 HAS SEPARATE SPEAKER

NOTES:

1. ▽ = B−, ⏚ = CHASSIS.
2. ⊕ = EXTERNAL CONNECTIONS TO PRINTED BOARD.
3. VOLTAGES MEASURED WITH V.T.V.M.
4. RESISTANCE MEASURED IN OHMS; K = 1,000; MEG. = 1,000,000.
5. RESISTANCE TOLERANCE IS 20% UNLESS OTHERWISE INDICATED.
6. CAPACITANCE VALUES LESS THAN ONE (1) ARE IN MICROFARADS (µf), AND VALUES OF ONE (1) OR GREATER ARE IN MICRO-MICROFARADS (µµf) UNLESS OTHERWISE INDICATED.

CAUTION:

COMPONENTS IN THIS AMPLIFIER ARE INTER-CONNECTED TO RESULT IN A CONSISTANT PHASE RELATION BETWEEN APPLIED VOLTAGE AND VOICE COIL MOVEMENT (I.E. A POSITIVE INPUT VOLTAGE MOVES VOICE COIL OUTWARD IN RIGHT CHANNEL, INWARD ON LEFT CHANNEL.) DO NOT DISTURB THIS PHASE RELATIONSHIP DURING SERVICEING.