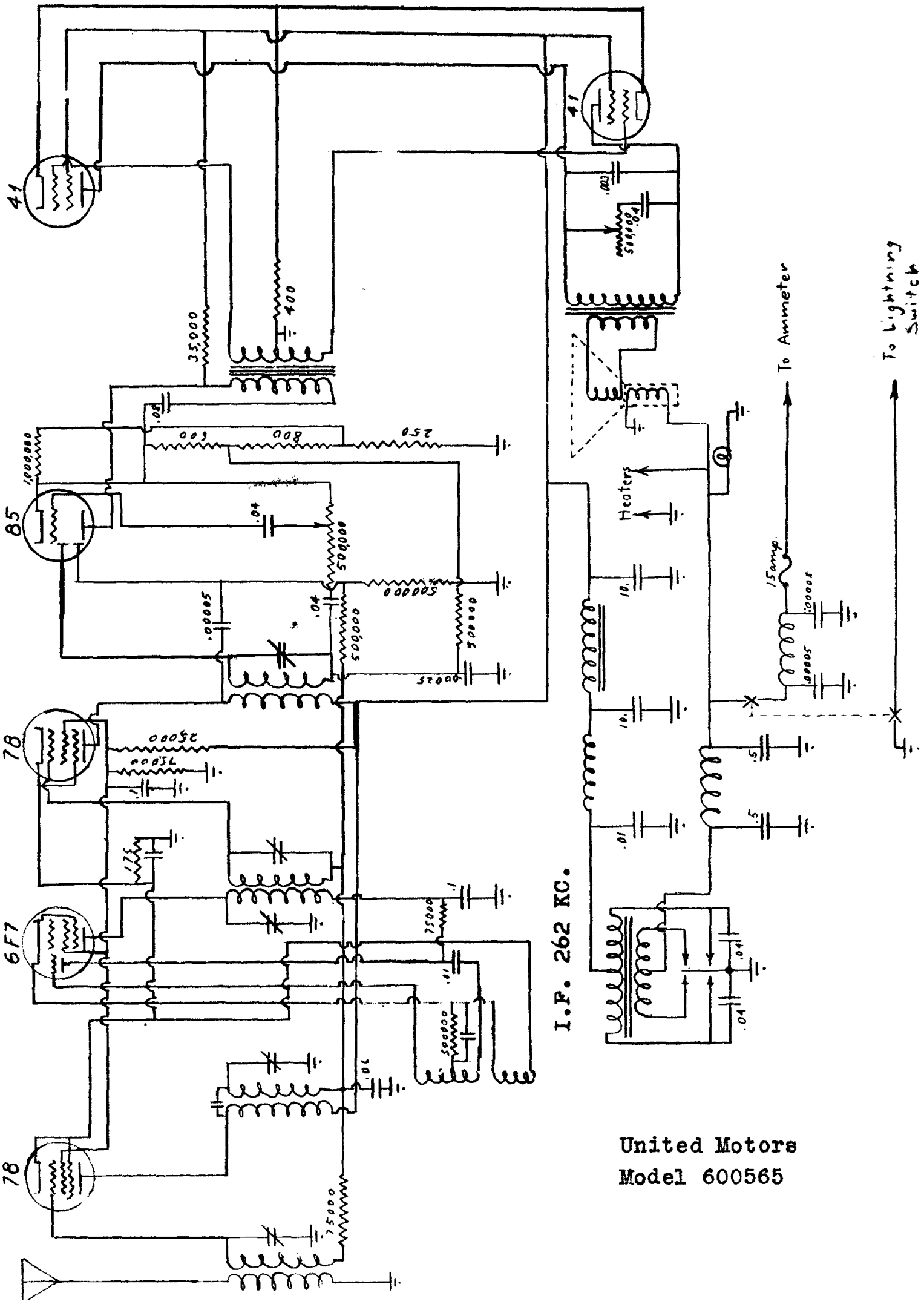

United Motors
Model 600565