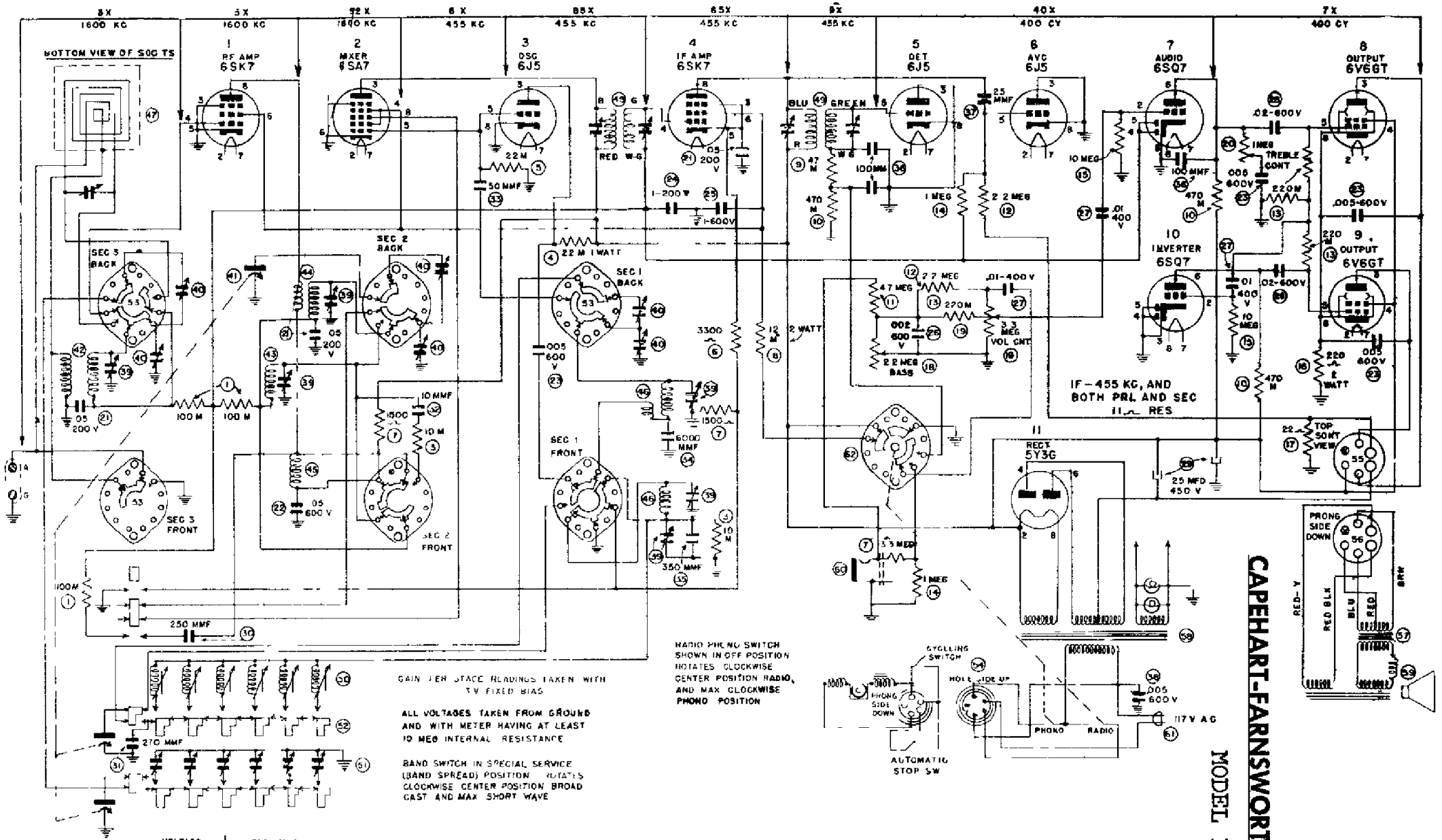

CAPEHART-FARNSWORTH

MODEL M-4

SCHEMATIC M-4

VOLTAGE 1	RESISTANCE
1 0	1 0
2 6 3	2 2 Ω
3 0	3 0
4 1 6	4 3 6 MEG
5 0	5 0
6 1 1 3	6 INF
7 0	7 0
8 2 5	8 INF

VOLTAGE 2	RESISTANCE
1 0	1 0
2 6 3	2 2 Ω
3 2 4 0	3 INF
4 1 1 3	4 INF
5 7	5 2 2 M
6 0	6 0
7 0	7 0
8 1 6	8 3 6 MEG

VOLTAGE 3	RESISTANCE
1 0	1 0
2 6 3	2 2 Ω
3 1 1 3	3 1 1 3
4 0 PEN	4 0 PEN
5 7	5 2 2 M
6 2 4 0	6 INF
7 0	7 0
8 0	8 0

VOLTAGE 4	RESISTANCE
1 0	1 0
2 6 3	2 2 Ω
3 9	3 3 3 0 0
4 1 6	4 3 5 MEG
5 9	5 3 3 0 0
6 1 1 3	6 INF
7 0	7 0
8 2 4 0	8 INF

VOLTAGE 5	RESISTANCE
1 0	1 0
2 0	2 0
3 0	3 0
4 0	4 0
5 6	5 5 4 0 M
6 0	6 0
7 6 3 V AC	7 2 Ω
8 0	8 0

VOLTAGE 6	RESISTANCE
1 0	1 0
2 0	2 0
3 0	3 0
4 0	4 0
5 1 8	5 2 5 MEG
6 1 7	6 3 5 MEG
7 6 3 AC	7 2 Ω
8 0	8 0

VOLTAGE 7	RESISTANCE
1 0	1 0
2 6	2 1 0 MEG
3 0	3 0
4 1 6	4 3 5 MEG
5 1 6	5 0
6 1 1 5	6 INF
7 6 3	7 2 Ω
8 0	8 0

VOLTAGE 8-9	RESISTANCE
1 0	1 0
2 6 3	2 2 Ω
3 2 3 0	3 INF
4 2 4 5	4 INF
5 0	5 4 5 0 M
6 0	6 0
7 0	7 0
8 1 4	8 2 2 0

VOLTAGE 10	RESISTANCE
1 0	1 0
2 9	2 1 0 MEG
3 0	3 0
4 0	4 0
5 0	5 0
6 9 2 5	6 INF
7 6 3 AC	7 2 Ω
8 0	8 0

VOLTAGE 1	RESISTANCE
1 0	1 0
2 2 4 0	2 INF
3 0 PEN	3 0 PEN
4 4 8 0	4 1 1 0 0 Ω
5 0 PEN	5 0 PEN
6 4 8 0	6 1 1 0 0 Ω
7 0 PEN	7 0 PEN
8 2 4 0	8 INF