# United Motors Buick Model 981550

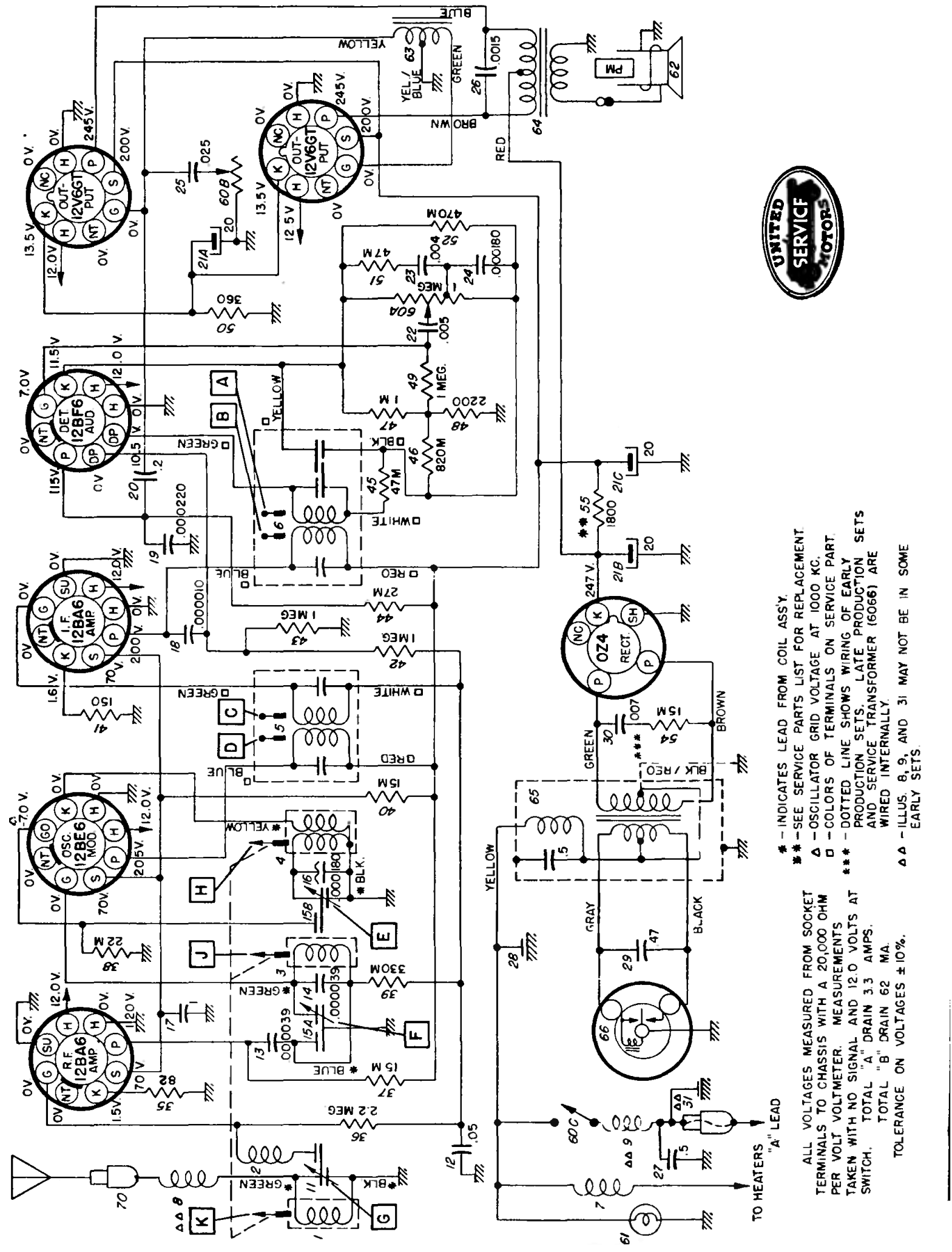

# United Motors
# Buick Model 981550

## GENERAL

MOUNTING—All 1954 Buick Cars.

TUBES—Six, plus Rectifier.

SPEAKER—6" x 9" Elliptical, Permanent Magnet.

TUNING—Manual and 5 P.B. Mechanical.

ANTENNA TRIMMER COMPENSATION—For Antennas Between 0.000050 - 0.000095 Mfd.

TUNING RANGE—550 - 1600 KC.

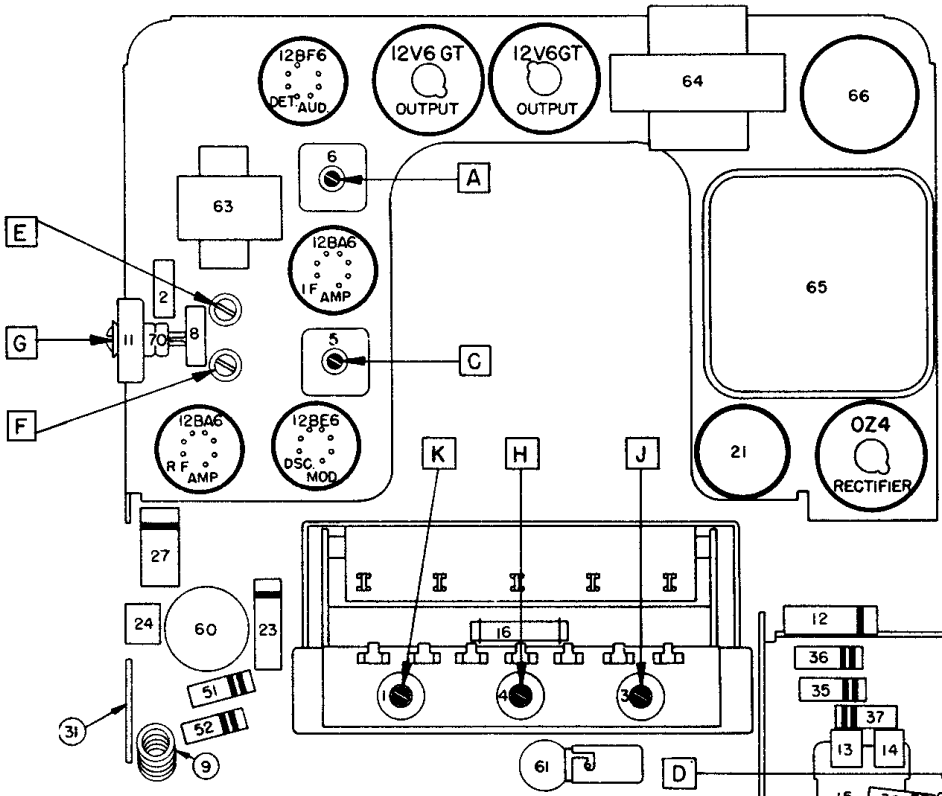


PARTS LAYOUT — TUBE VIEW

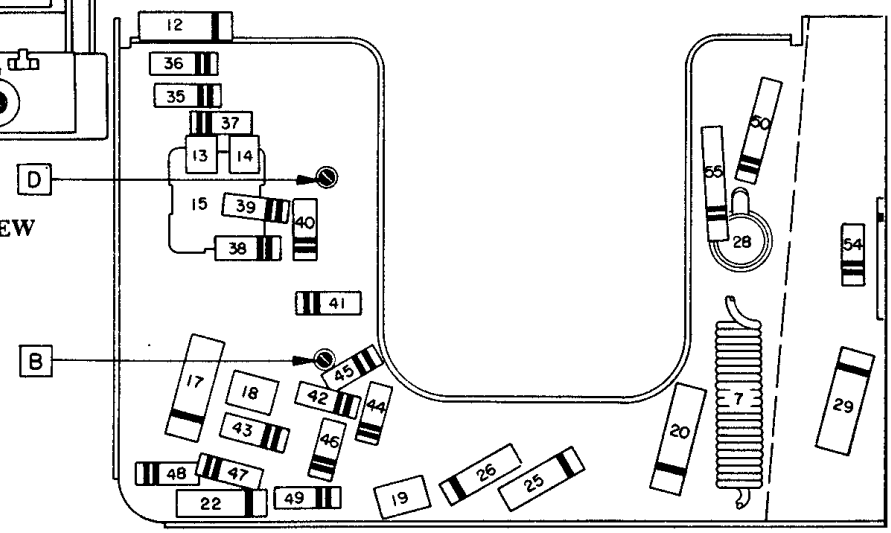


PARTS LAYOUT — CHASSIS VIEW

## PUSH BUTTON SET-UP PROCEDURE

Pull Push Button to the right and out. Tune in desired station manually. Push button all the way in.

## ALIGNMENT PROCEDURE

Output Meter Connections ..... Across Voice Coil
Generator Return ..... To Receiver Chassis
Dummy Antenna ..... In Series With Generator
Volume Control Position ..... Maximum Volume
Tone Control Position ..... Treble
Generator Output ..... Minimum for Readable Indication

| Step | Series Condenser or Dummy Antenna | Connect Signal Generator To | Signal Generator Frequency | Tune Receiver to | Adjust in Sequence For Max. Output |
|---|---|---|---|---|---|
| 1 | 0.1 Mfd. | 12BE6 Grid (Pin #7) | 262 KC | High Frequency Stop | A, B, C, D |
| 2 | .000082 Mfd. | Antenna Connector | 1615 KC | High Frequency Stop | *E, F, G |
| 3 | .000082 Mfd. | Antenna Connector | 1000 KC | Signal Generator Signal | J, K |
| 4 | .000082 Mfd. | Antenna Connector | 1615 KC | High Frequency Stop | F, G |
| 5 | .000082 Mfd. | Antenna Connector | 1000 KC | Signal Generator Signal | L** |

*Before making this adjustment check mechanical setting of oscillator core "H." The rear of the core should be $1\frac{35}{32}$" from the mounting end of the coil form. (This measurement is readily made by inserting a suitable plug in the mounting end of the coil form.) Core adjustment should be made with an insulated screwdriver, and core studs should be cemented in place with glyptal or household cement after alignment.

**L is the pointer adjustment screw which is on the connecting link, between the pointer assembly and the parallel guide bar. It should be adjusted so that the dial pointer corresponds with the 1000 KC mark on the dial. (On first "0" of "100.")

With the radio installed and the car antenna plugged in, adjust the antenna trimmer "G" for maximum volume with radio tuned to a weak station between 600 - 1000 KC (see sticker on case.)