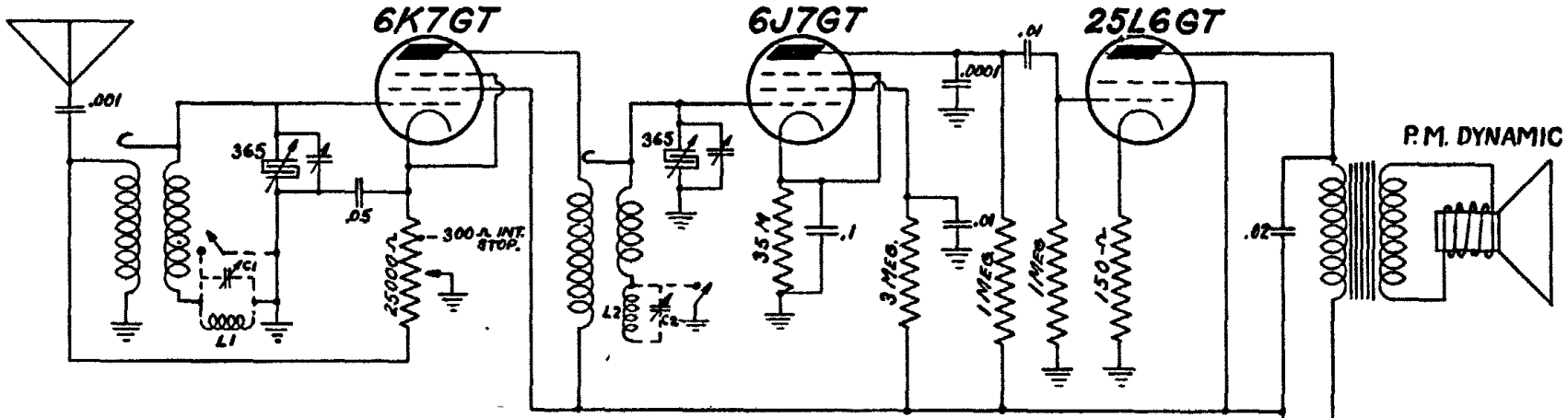

MODEL
406 - 406 L.W.

In Model 406 L.W.
LI, CI, L2 & C2 are in circuit.

In Model 406
LI, L2, CI, & C2 are omitted

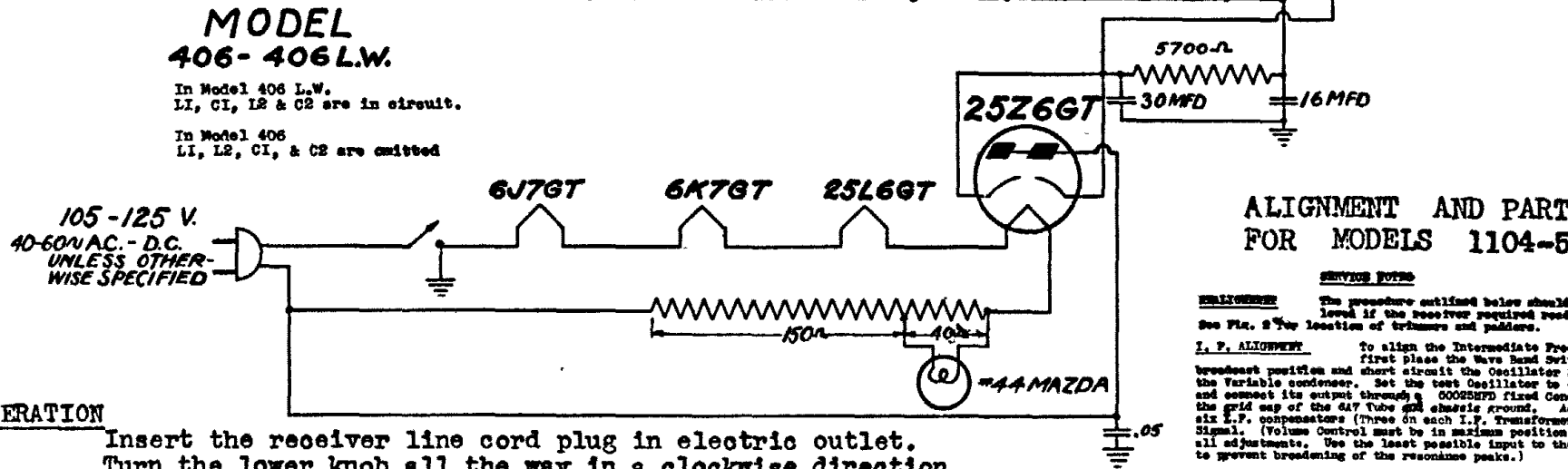

OPERATION

Insert the receiver line cord plug in electric outlet. Turn the lower knob all the way in a clockwise direction. Allow approximately one minute for the tubes to heat up and receiver is then ready for operation.

NOTE

If receiver is being operated on D.C. and no signals are heard after one minute, reverse the line cord plug in the outlet. To turn receiver "off". rotate the lower knob all the way in a counter clockwise direction until a snap is heard and the dial lamp goes out.

MODEL 406 - 406 LW LIST PRICES OF REPLACEMENT PARTS

1510	Antenna Coil	.50	3446	comb. vol. cont.	1.00
1511	Det Coil	.50	8607	pilot lamp	.10 net
2447	2 gang var. cond.	2.00	8882	knobs	.10
2448	comb. electrolytic	1.25		Walnut cabinet	2.50
6098	scale	.25		Colored cabinet	3.50
7240	speaker	3.50			

These receivers are designed to operate on 105-125 volts 40-60 cycles A.C. or D.C. The broadcast range coverage is 540-1750 K.C.

DEWALD RADIO

MODELS 406, 406LW
MODELS 1104, 1105

ALIGNMENT AND PARTS FOR MODELS 1104-5

SERVICE NOTES

ALIGNMENT The procedure outlined below should be followed if the receiver required readjusting. See Fig. 2 for location of trimmers and padders.

I. F. ALIGNMENT To align the Intermediate Frequency stages. first place the Wave Band Switch in broadcast position and short circuit the Oscillator Section of the Variable condenser. Set the test Oscillator to 456 K.C. and connect its output through a .00025MFD fixed Condenser to the grid cap of the 6A7 Tube and chassis ground. Adjust the six I.F. compensators (Three on each I.F. Transformer) for Max Signal. (Volume Control must be in maximum position during all adjustments. Use the least possible input to the receiver to prevent broadening of the resonance peaks.)

BROADCAST ALIGNMENT After the Intermediate Frequency stages have been completely aligned, connect external test oscillator to the Antenna and Ground binding posts of the set. See Fig. 3-A. Set the band switch to broadcast position. Set test Oscillator to 1500 K.C. and adjust the three broadcast Compensators for maximum gain. Next. set dial at 600 K.C. and adjust broadcast padder for maximum signal, rocking Variable Condenser at the same time Now repeat repeaking operation at 1500 K. C.

INTERMEDIATE S.W. ALIGNMENT Turn Wave Band Switch to Intermediate S. W. position and set Variable Condenser to 5000 K. C. Adjust test oscillator to this frequency and adjust 3 intermediate s. w. trimmers for maximum gain. Next set dial at 1900 K. C. and adjust Intermediate s. w. padder for maximum signal. Now repeat repeaking operation at 5000 K. C.

SHORT WAVE ALIGNMENT Turn Wave Band Switch to S. W. position and set Variable Condenser to 18 megacycles. Adjust test oscillator to this frequency and adjust three S W. Trimmers for maximum signal.

LONG WAVE ALIGNMENT Turn Wave Band Switch to L. W. position and align Trimmers on long wave Coils to 400 K. C. Adjust L. W. Padder at 160 K. C.

LIST PRICES OF REPLACEMENT PARTS

1286	filter choke	2.00	2425	3 gang var. cond.	5.10
1338	comb. ant coil	2.60	3422	volume control	.90
1339	" det. "	2.60	3423	comb. tone cont.	1.10
1340	" sec. "	2.25	6085	dial scale	.75
1459	R.F. choke "	.55	7238	speaker	10.00
1484	first I.F. "	2.00	8542	pilot lamp	.10 net
1485	second I.F. "	2.00	8636	P.L. assembly	.15
1509	push-pull trans	2.50	8639	wave band switch	2.75
2288	dual padder	1.00	8640	phono. switch	1.00
2381A	40 mfd. elect.(wet)	1.25	8641	dial assembly	4.00
2383	5 " "	.50	8647	knob	.80
2435	16 " "	.50		cabinet	22.50