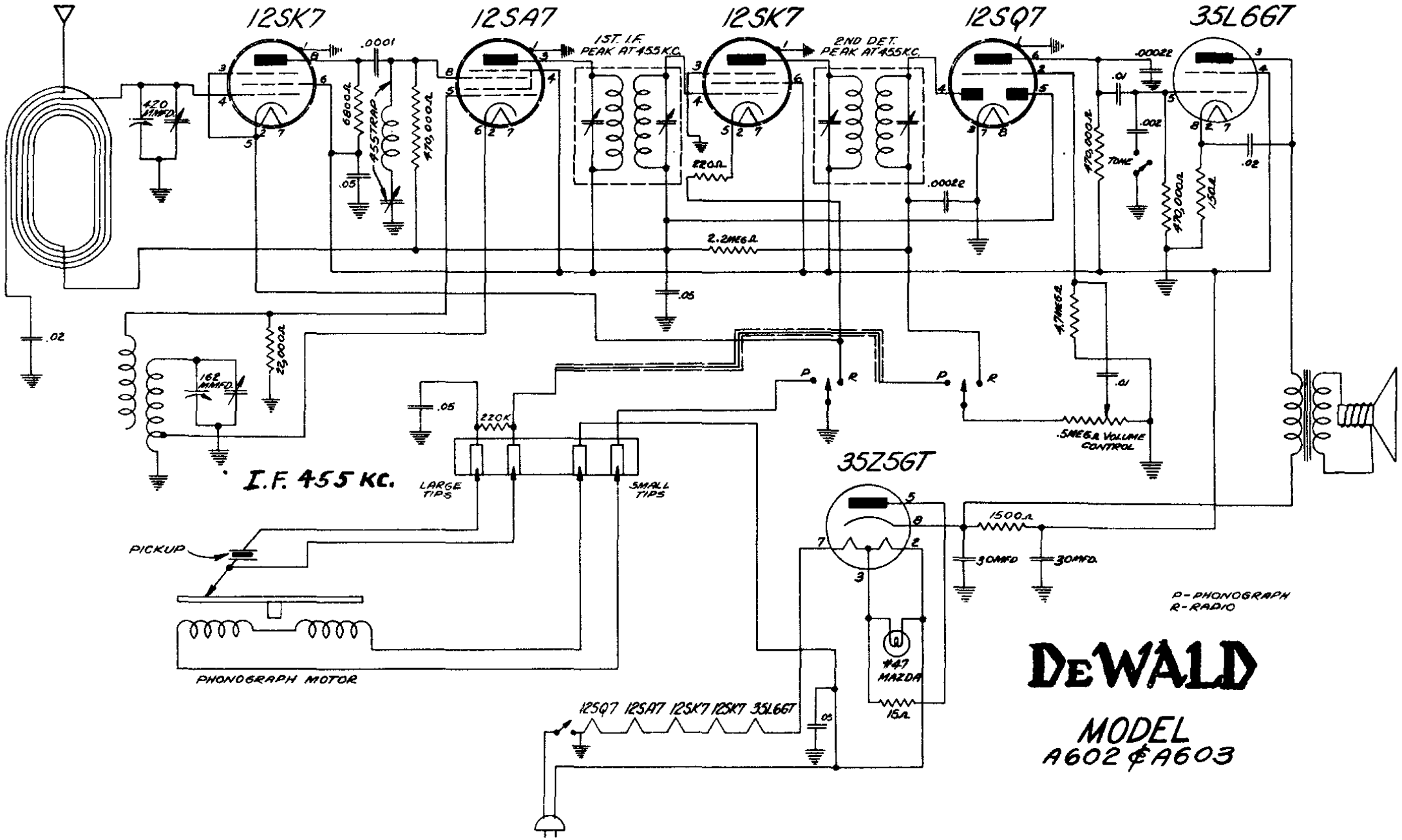
12SK7
12SA7
12SK7
12SQ7
35L6GT
1ST. I.F. PEAK AT 455 K.C.
2ND DET. PEAK AT 455 K.C.
.0001
.00022
.01
.002
.02
.05
420 MMFD.
6800Ω
455 TRAP
470,000Ω
220Ω
2.2 MEGΩ
470,000Ω
TONE
150Ω
4.7 MEGΩ
.5 MEGΩ VOLUME CONTROL
162 MMFD.
23,000Ω
220K
LARGE TIPS
SMALL TIPS
I.F. 455 KC.
PICKUP
PHONOGRAPH MOTOR
35Z5GT
1500Ω
30 MFD
30 MFD.
#47 MAZDA
15Ω
12SQ7 12SA7 12SK7 12SK7 35L6GT
P-PHONOGRAPH
R-RADIO
DeWALD
MODEL
A602 & A603