DEWALD RADIO

MODEL AC 145
MODEL AC 245

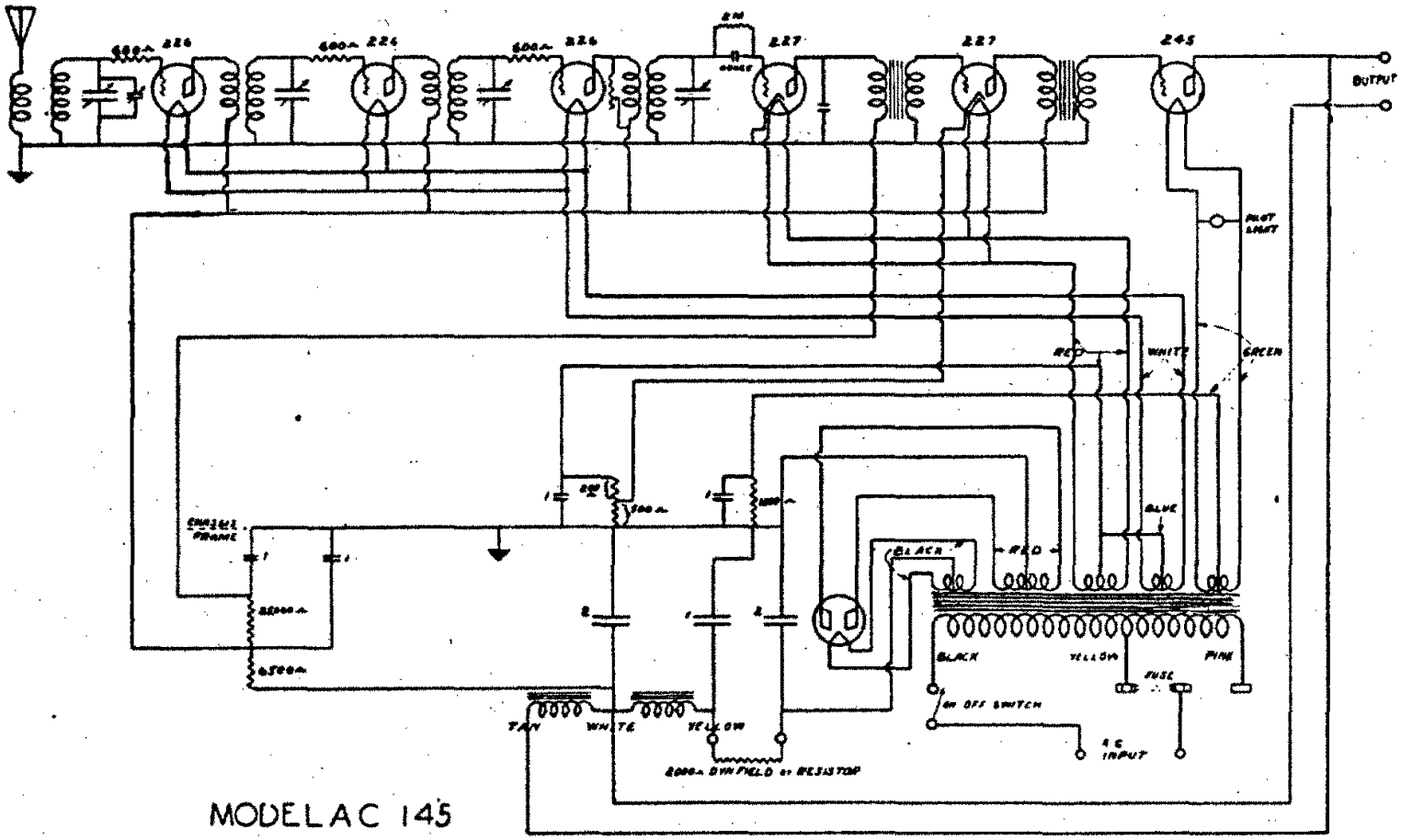

MODEL AC 145

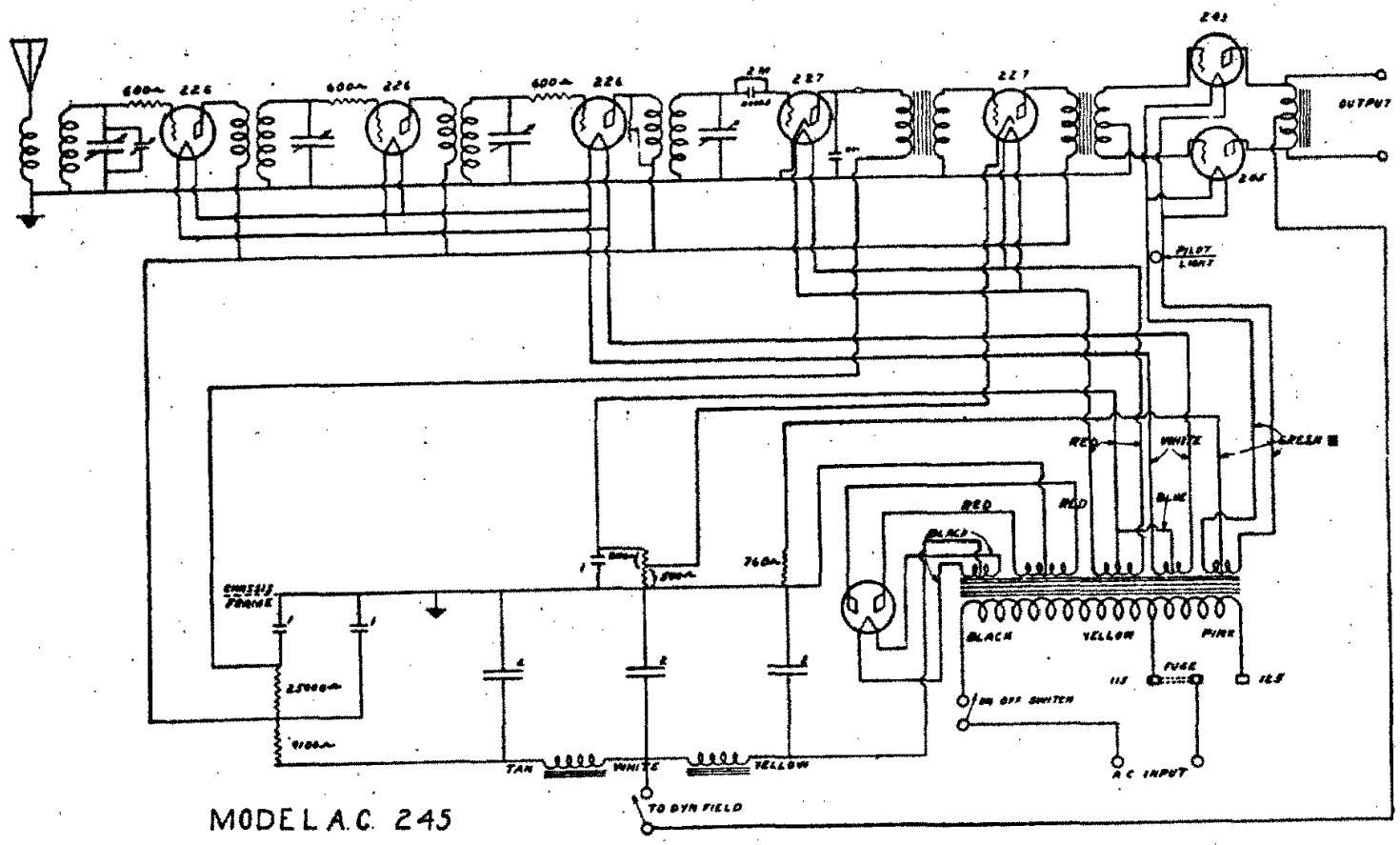

MODEL A.C. 245