ARVIN Model 140P
Chassis RE-209
Noblitt-Sparks In.

VOLTAGE & RESISTANCE MEASUREMENTS FROM SOCKET TERMINALS TO FLOATING GROUND

WITH SLIDE SWITCH IN ELECTRIC POSITION

TUBE	VOLTAGE 1	2	3	4	5	6	7	8	RESISTANCE 1	2	3	4	5	6	7	8
1R5	2.8	95	48	**	2.8	*1.8	4.2		39	3.5K	25.5K	100K	39	4.3M	50	
1U4	0	95	95	*1.8	0	0	1.4		0	3.5K	3.5K	4.3M	0	10M	22	
1S5	2.8	0	*2	*20	*50	*1	1.4		39	Inf.	1M+	4.75M	333.5K	4.7M	22	
3V4	4.2	95	95	7	5.6	0	7		50	3.5K	3.5K	65	60	2.2M	65	
OY4	0	0	+DC	117AC	117AC	0	120	120	330K	Inf.	Inf.	Inf.	Inf.	Inf.	1889	1889

WITH SLIDE SWITCH IN BATTERY POSITION

1R5	3.0	90	48	**	3.0	*1.8	4.5		39	*	**	100K	39	4.3M	50	
1U4	0	90	90	*1.8	0	0	1.5		0	*	*	4.3M	0	10M	22	
1S5	3.0	0	*2	*20	*50	*1	1.5		39	Inf.	1M+	4.75M	390K	4.7M	22	
3V4	4.5	90	90	0	6.0	0	7.5		50	*	*	680	60	2.2M	72	
OY4	0	0	0	0	0	0	0	0	330K	Inf.	10.3M	330K	330K	Inf.	2.5K	2.5K

All voltage measurements are made with a line voltage of 117V AC or a battery having 90 VB and 7.5 VA; with no signal using a 1000 ohm per volt voltmeter and are +DC unless otherwise indicated.

* Measured with a vacuum tube voltmeter.

**The oscillator voltage measured with a vacuum tube voltmeter from the oscillator grid to floating ground will vary from approx. —6V with the variable condenser closed to —12V with the condenser open. The true oscillator voltage measured from the grid to the negative filament lug should be from —10 to —20V.

* The resistance reading at this point is the leakage across the electrolytic condenser and will vary with different condensers and different ohmeters. With the negative lead of the ohmeter to floating ground. the reading may vary anywhere from 50K to 1M depending on the type meter used.

** 22K higher than the electrolytic condensers leakage

K equals 100 ohms

M equals 1 megohm

FREQUENCY RANGE

Broadcast ..... 540-1600 kc
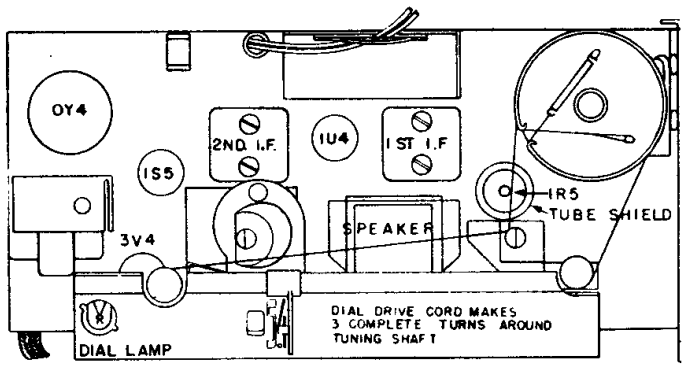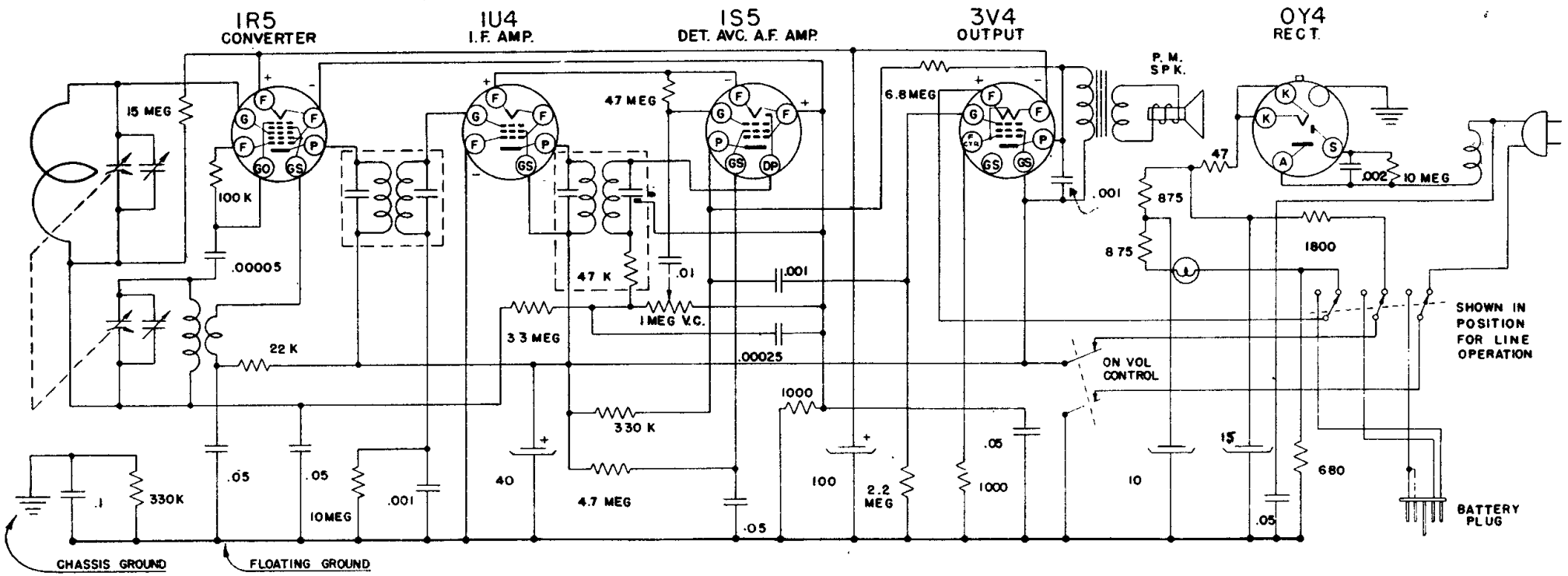
IF ..... 455 kc