MODEL 600
Chassis UB6
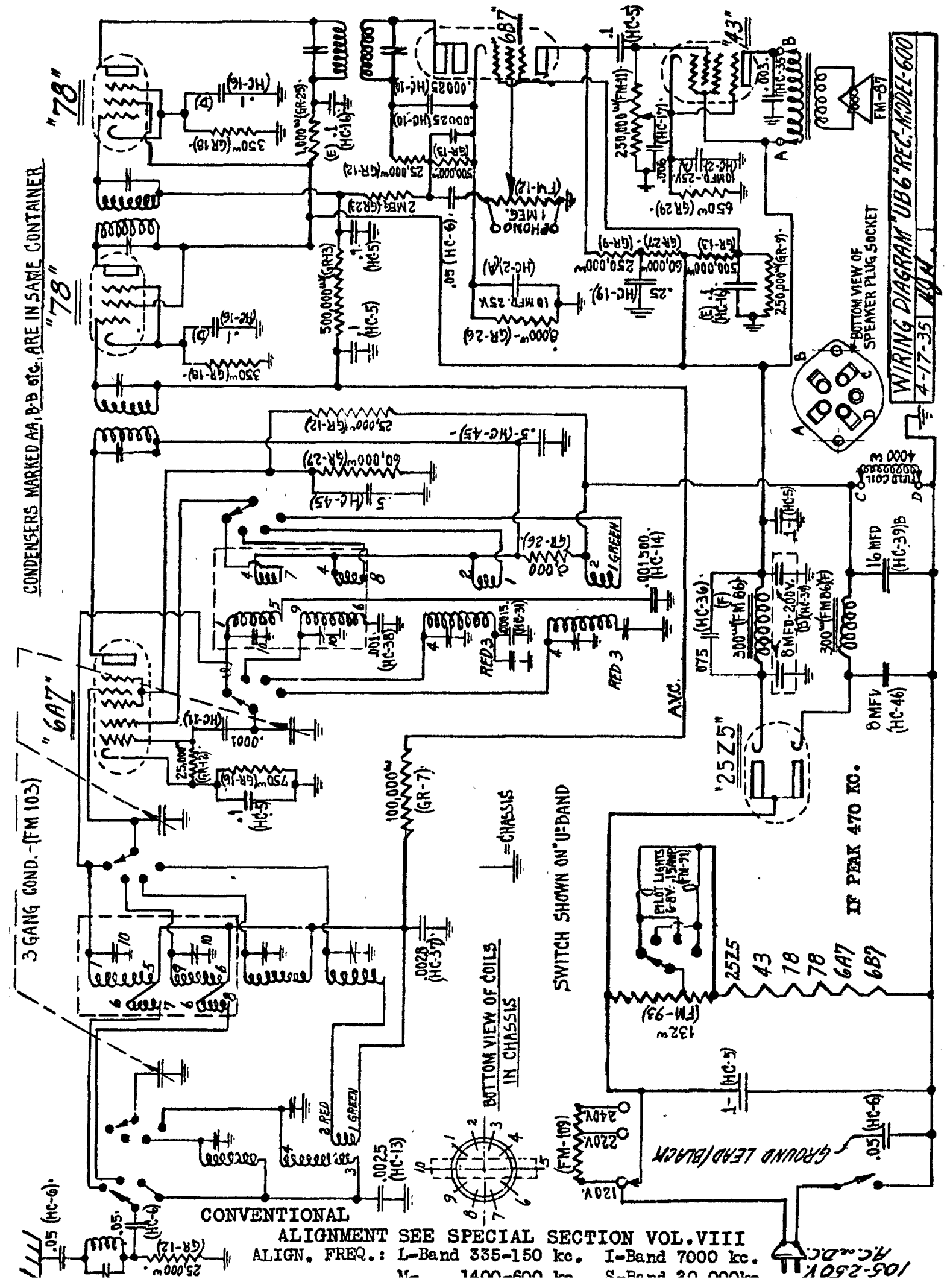
ANDREA RADIO CORP.