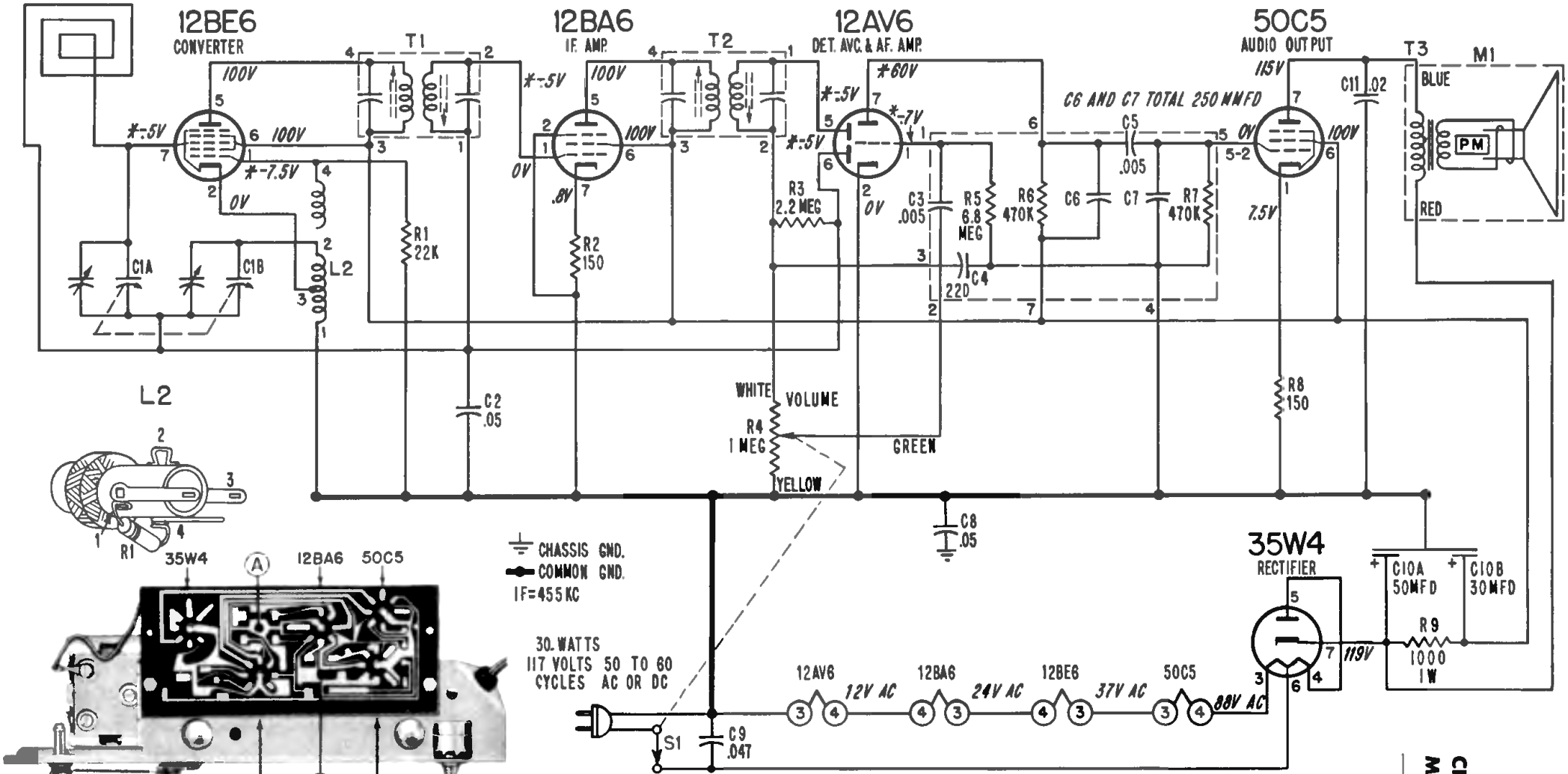

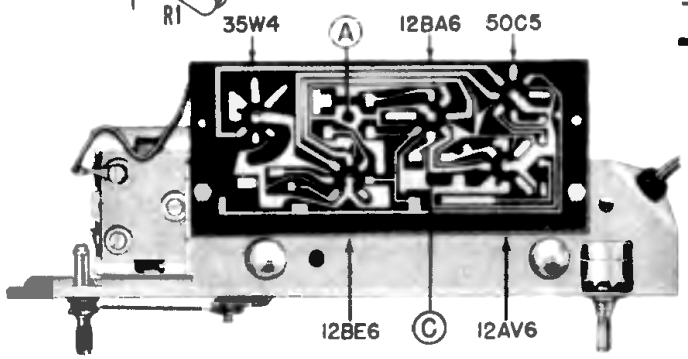

Bottom View of (Early Production) Chassis.

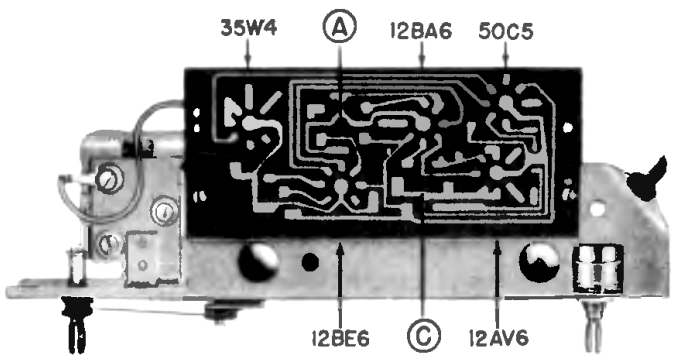

Bottom View of (Later Production) Chassis.

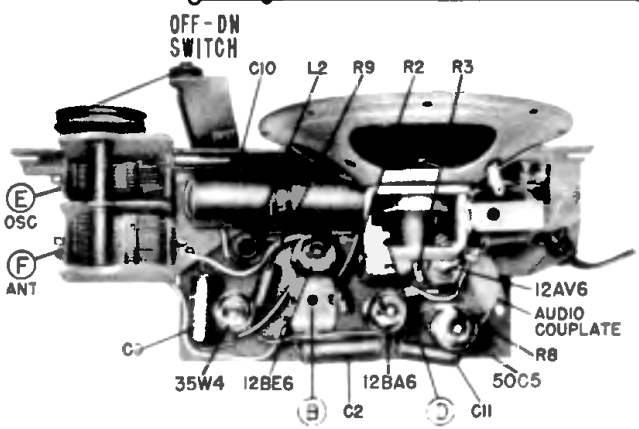

Top View of Chassis. Location of Components and Alignment Adjustments Shown.

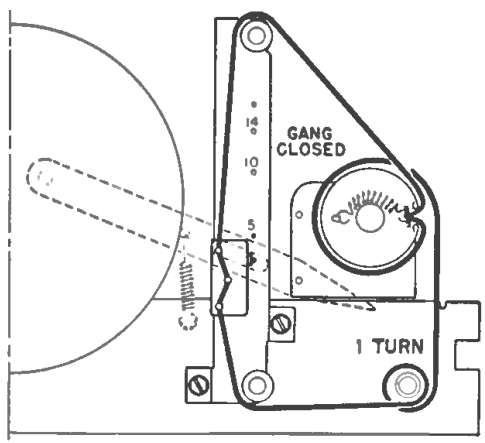

Admiral

CHASSIS 5C3

MODELS 5S21AN, 5S22AN, 5S23AN