AIR KING PRODUCTS CORP.

MODEL 9E
MODEL 252

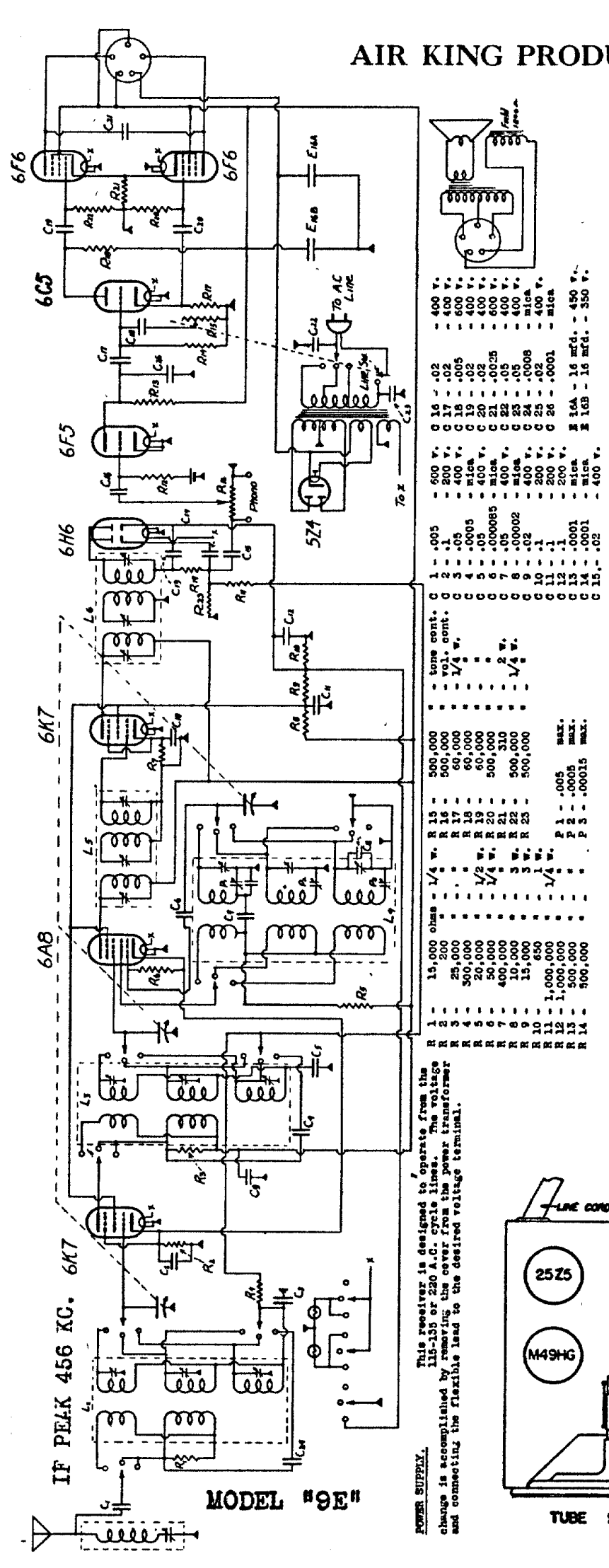

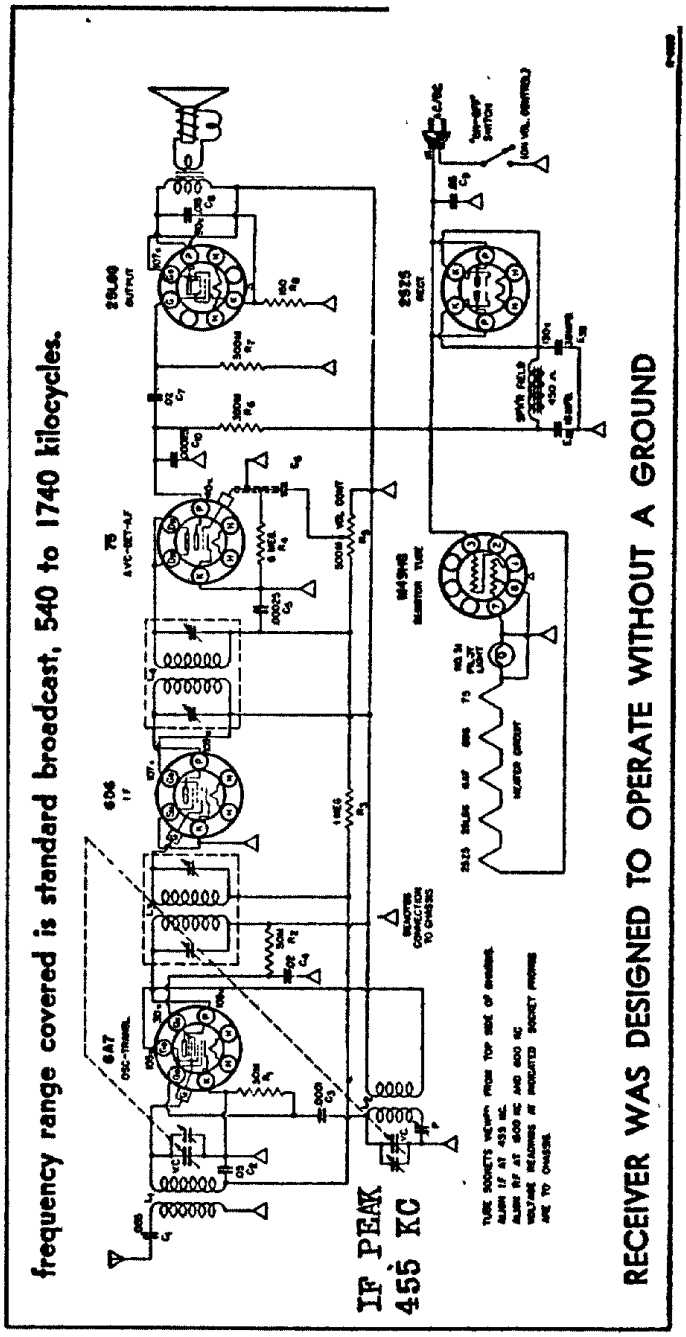

MODEL 252

110 to 125 volts 50-60 cycles AC or DC

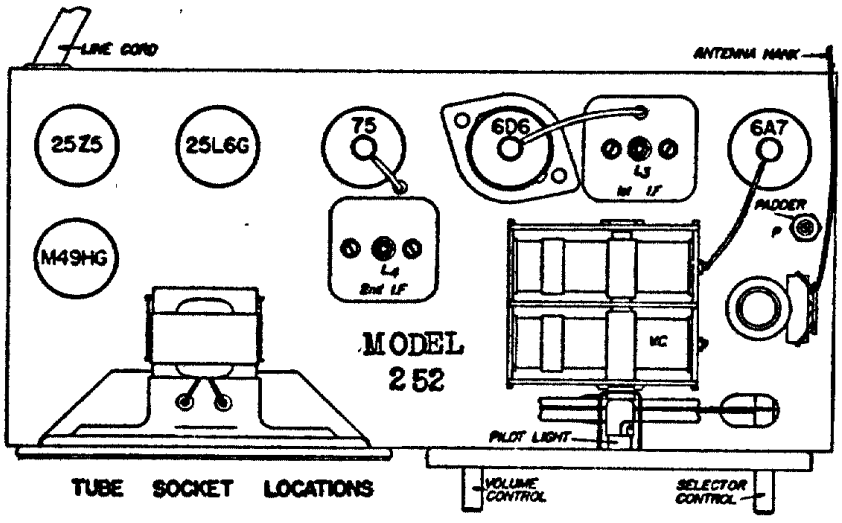

TUBE SOCKET LOCATIONS