STR-212L

AEP Model
UK Model

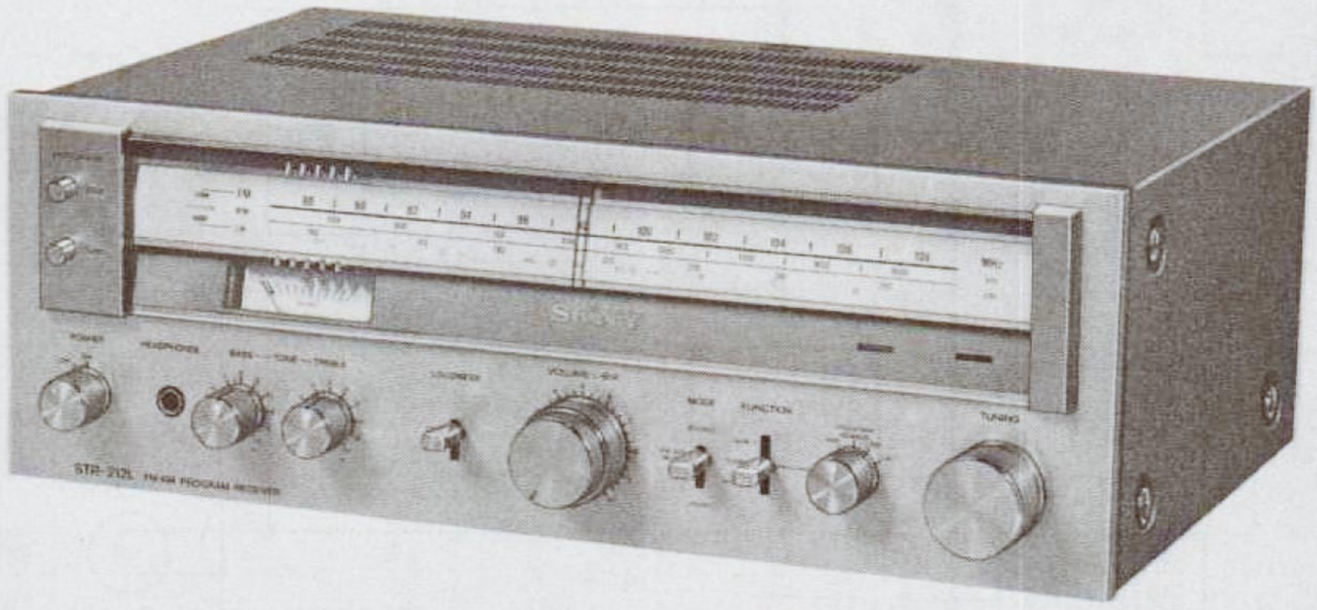

FM-AM PROGRAM RECEIVER

SPECIFICATIONS

GENERAL

Power Requirements: 240 V ac, 50 Hz (UK model)
120 V, 220 V or 240 V ac adjustable, 50 Hz (AEP model)

Power Consumption: 110 W (UK model)
95 W (AEP model)

Dimensions: Approx. 410 (w) x 145 (h) x 295 (d) mm
16 (w) x 5 ¾ (h) x 11 ½ (d) inches
including projecting parts and controls.

Weight: Approx. 6.3 kg, 13 lb 15 oz (net)
Approx. 7.5 kg, 16 lb 9 oz (in shipping carton)

FM SECTION

Tuning Range: 87.5 – 108 MHz

Antenna: 300 Ω balanced
75 Ω unbalanced

Intermediate Frequency: 10.7 MHz

Sensitivity at 50 dB Quieting: 4 μV (12 dB) (MONO)
45 μV (33 dB) (STEREO)

Sensitivity at 46 dB Quieting: (at 40 kHz deviation) 4.5 μV (13 dB) (MONO)
50 μV (34 dB) (STEREO)

Usable Sensitivity: 1.9 μV (5.5 dB), IHF
1.7 μV (4.5 dB), S/N=26 dB
(40 kHz deviation)

S/N Ratio: 73 dB (MONO)
68 dB (STEREO)

Harmonic Distortion: At 1 kHz
0.3 % (MONO)
0.5 % (STEREO)
At 1 kHz
0.2 % (MONO)
0.3 % (STEREO)

IM Distortion: 0.3 % (MONO)
0.5 % (STEREO)

Separation: 45 dB at 1 kHz

Frequency Response: 40 – 12,500 Hz $^{+0.5}_{-1.0}$ dB
30 – 15,000 Hz $^{+0.5}_{-2.0}$ dB

— Continued on page 2 —

SAFETY-RELATED COMPONENT WARNING!!

COMPONENTS IDENTIFIED BY SHADING AND MARK ⚠ ON THE SCHEMATIC DIAGRAMS, EXPLODED VIEWS AND IN THE PARTS LIST ARE CRITICAL TO SAFE OPERATION. REPLACE THESE COMPONENTS WITH SONY PARTS WHOSE PART NUMBERS APPEAR AS SHOWN IN THIS MANUAL OR IN SUPPLEMENTS PUBLISHED BY SONY.

SONY®
SERVICE MANUAL

www.hifiengine.com

Selectivity: 55 dB (400 kHz)
30 dB (300 kHz, S/N=26 dB, 40 kHz deviation)

Capture Ratio: 1.0 dB

AM Suppression Ratio: 54 dB

Image Response Ratio: 45 dB

IF Response Ratio: 90 dB

Spurious Response Ratio: 75 dB

RF Intermodulation: 60 dB

Muting Threshold: Approx. 5 μV

MW/LW SECTION

Tuning Range: MW: 530 – 1,605 kHz
LW: 150 – 350 kHz

Antenna: MW: External antenna terminal
Attached antenna wire
LW: Built-in Ferrite-rod antenna
External antenna terminal

Intermediate Frequency: 468 kHz

Usable Sensitivity: MW: 100 μV (40 dB)
external antenna (1,000 kHz)
LW: 500 μV/m (53.8 dB/m),
built-in antenna (230 kHz)
100 μV (40 dB),
external antenna (230 kHz)

S/N Ratio: MW: 50 dB at 5 mV
LW: 52 dB at 50 mV/m

Harmonic Distortion: MW: 0.3 % at 5 mV, 400 Hz
LW: 0.3 % at 50 mV/m, 400 Hz

Selectivity: 28 dB (9 kHz)
30 dB (10 kHz)

AUDIO AMPLIFIER SECTION

Continuous RMS Power Output: Less than 0.7 % THD, both channels driven simultaneously
At 40 – 20,000 Hz
15 W + 15 W (8 Ω)
At 1 kHz
15 W + 15 W (8 Ω)
According to DIN 45500
15 W + 15 W (8 Ω)

Dynamic Power Output: IHF constant power supply method
50 W at 8 Ω

Power Bandwidth: 10 – 40,000 Hz, IHF

Damping Factor: 20 at 1 kHz (8 Ω)

Harmonic Distortion: Less than 0.7 % at rated output
Less than 0.3 % at 1 W output

IM Distortion: (60 Hz : 7 kHz = 4 : 1)
Less than 0.7 % at rated output
Less than 0.3 % at 1 W output

Residual Noise: Less than 0.08 μW at 8 Ω

Frequency Response: PHONO:
RIAA equalization curve ± 1.0 dB
TAPE:
10 – 50,000 Hz $^{+1\ dB}_{-3\ dB}$

Inputs:

	Sensitivity	Impedance	S/N	Weighting network
PHONO	2.5 mV (–50 dB)	50 kΩ	70 dB	A
TAPE	150 mV (–14.5 dB)	100 kΩ	90 dB	A

Measured with rated output power into 8 Ω loads (both channels driven simultaneously) at 1 kHz.

Outputs: (with rated input)

	Voltage	Impedance
REC OUT	150 mV (–14.5 dB)	10 kΩ

Headphones: Accepts all low or high impedance headphones.

Speaker: 8 – 16 Ω speakers are suitable.

Tone Controls: BASS: ±8 dB at 100 Hz
TREBLE: ±8 dB at 10 kHz

Loudness Control: (att. 30 dB)
+8 dB at 100 Hz
+3 dB at 10 kHz

• MODEL IDENTIFICATION

– Specification Label –

AEP model

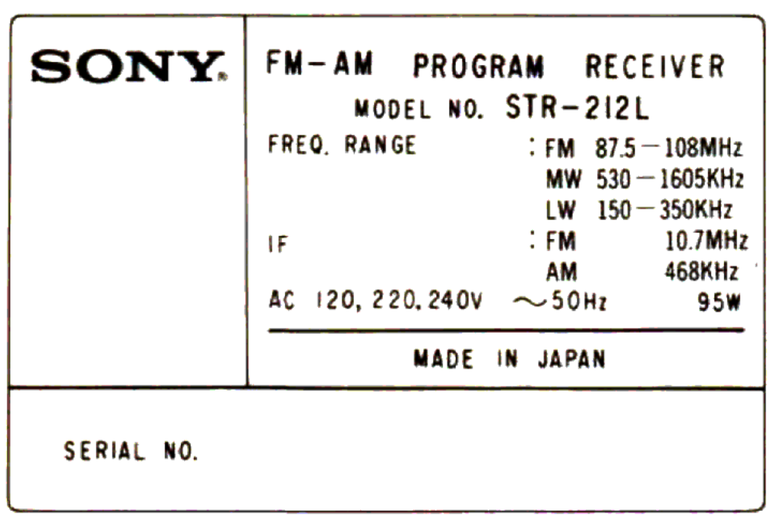

UK model

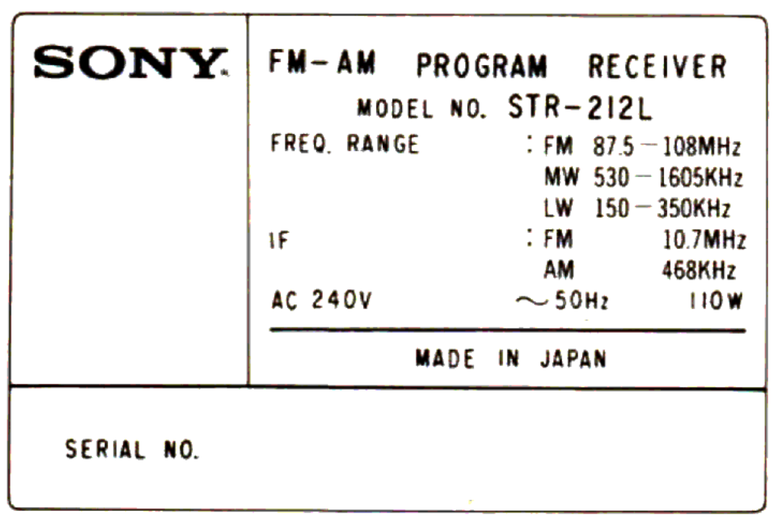

www.hifiengine.com

SECTION 1
OUTLINE

1-1. BLOCK DIAGRAM

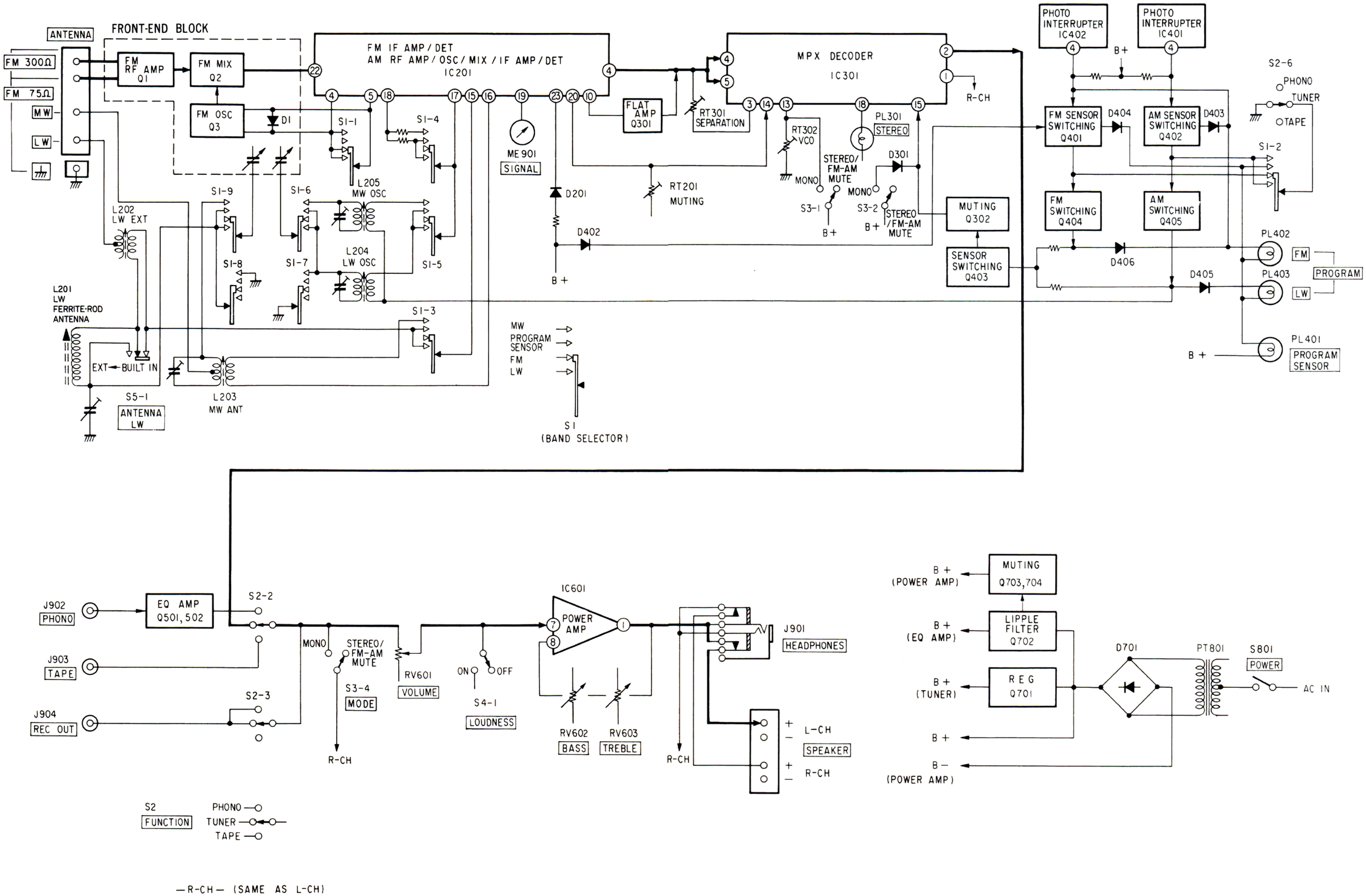

www.hifiengine.com

1-2. CIRCUIT DESCRIPTION (See Fig. 1)

Program Sensor

The FM or LW band can be changed automatically through the optical detection by the following procedures;

1 Set the FUNCTION selector switch to TUNER position.
2 Then, Set the Program Sensor/Band Selector switch to PROGRAM SENSOR position.
3 Match the dial pointer to the desired Station Marker. (See Fig. 2)
4 The FM or LW band changes automatically.

1) When the pointer matches only with the FM station marker:

a) The light of IC402 (Photo Interrupter) is intercepted by the marker, bias voltage is applied to the base of Q401 through R403, and Q401 is turned on.
b) The collecter voltage of Q401 reduces and D402 is turned on.
c) D402 is conducted, B+ voltage through R212 is decreased.
d) D201 is opened, B+ voltage is not supplied to the terminal (23) of IC201.
e) FM circuit operates (The terminal (23) of IC201 serves as a switch).

Note: When B+ voltage is applied to the terminal (23) of IC201 through R212, R209 and D201, the receiver is in LW mode.

f) At the same time, PL402 (FM indicator lamp) lights because of Q404 operating.

2) When the pointer matches only with the LW station marker:

a) As the light of IC402 is not intercepted, Q401 and D402 are turned off. As a result, B+ voltage is applied to the terminal (23) of IC201 through R212 and R209. On the other hand, the light of IC401 is intercepted by the LW station marker.
b) Q402 and Q405 are turned on.
c) B+ voltage is applied to L204 (LW oscillator coil).
d) LW circuit operates. When Q405 is on, PL403 (LW indicator lamp) simultaneously lights.

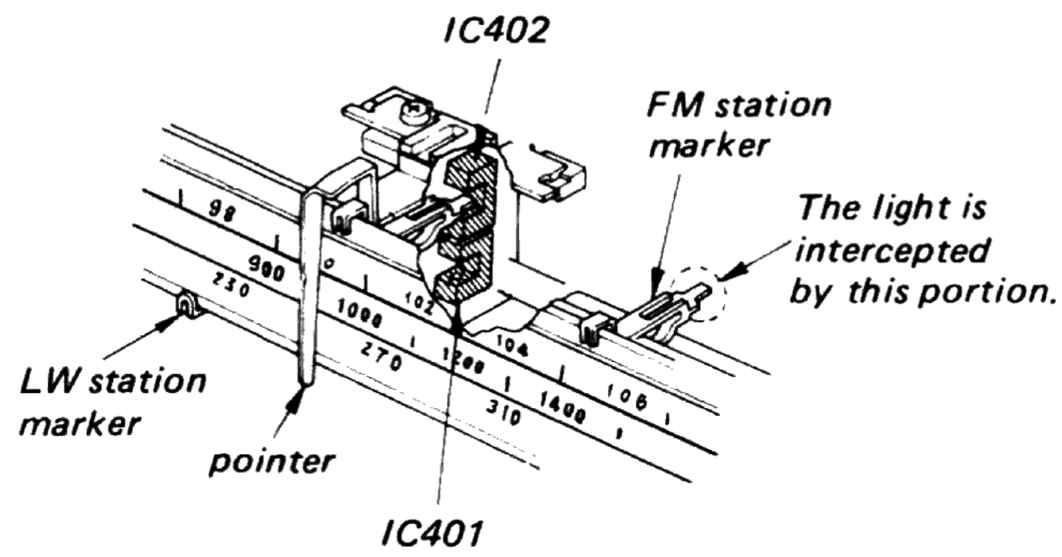

Fig. 2

3) When the pointer matches simultaneously with both the FM and LW station markers:

a) Q401 and Q404 are turned on by intercepting the light of IC402. On the other hand, the light of IC401 is also intercepted and the bias voltage is applied to the base of Q402. However, D403 is turned off because the collector potential of Q404 becomes higher than the emitter potential of Q402. Thus, Q402 and Q405 are turned off, and B+ voltage is not applied to L204 (LW oscillator coil). Consequently only the FM station signal is received.

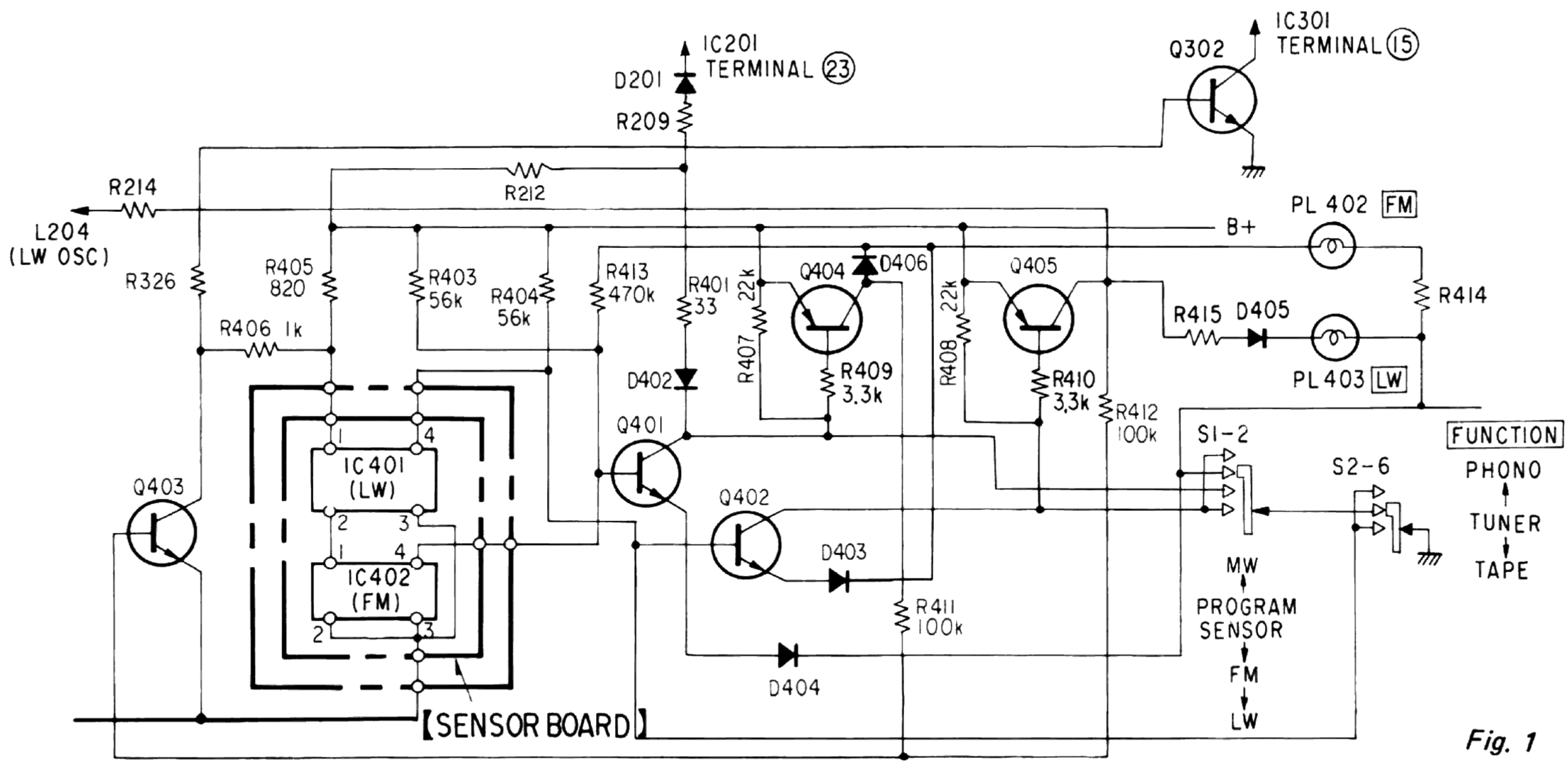

Fig. 1

www.hifiengine.com

Q403 and 302

Q403 operates to improve the rise time of PL402 (FM indicator lamp) or PL403 (LW indicator lamp) when the station signal is tuned, and at the same time switches Q302. Q302 serves as a high-speed-muting switch which is turned on or off as soon as the station signal is tuned or detuned.

IC201 (CX168), IC301 (CX178)

These two ICs form a system. Both of them are bipolar-linear-ICs. CX168 integrates 343 elements and CX178 integrates 260 elements. They include many functions and are improved upon the degree of integration now available as a linear-ICs for tuner use. They have high performance in FM reception and form a muting system having an FM muting attenuation of 90dB. In addition, because a muting circuit is newly employed in the AM circuit, not only is there high performance in FM reception but AM station signal can be received with fine tone quality and sensitivity as with FM broadcasting station. Besides, as an additional function, they operate for FM/AM continuous station selection, FM/AM signal-strength meter output, FM/AM muting output switching and enforced AGC at FM reception.

CX168 Main Function

<FM>
- IF Amplifier
- Quadrature detector
- Signal-strength Meter Output
- Muting Signal Output
- AFC Output for Converter
- Multipath Signal Output
- Bandpass Control Circuit

<AM>
- RF Attenuator
- Mixer
- Oscillator
- IF Amplifier and AGC
- AM Detector
- Signal-Strength Meter Output
- Signal Generator for AM Muting

<General>
- Regulator
- FM/AM Switching
- Regulator Output

CX178 Main Function

<FM Stereo Demodulator>
- FM Stereo Demodulator
- Phase Detector
- Stereo Indicating Circuit
- VCO
- VCO ON/OFF Circuit

<General>
- Muting Gate
- Regulator
- Muting Canceler Circuit
- Pop-noise Canceler
- Hysteresis Circuit

Photo Interrupter (IC401, 402)

The terminals ① and ② of the photo interrupter operate as the light emitting diode. On the other hand, the terminals ③ and ④ operate as the photo detector. When the photo detector receives the light as shown in Fig. 3, impedance between terminals ③ and ④ is low. When light is intercepted by the marker, as shown in Fig. 4, it becomes high-impedance.

When the photo detector receives the light **When light is intercepted**

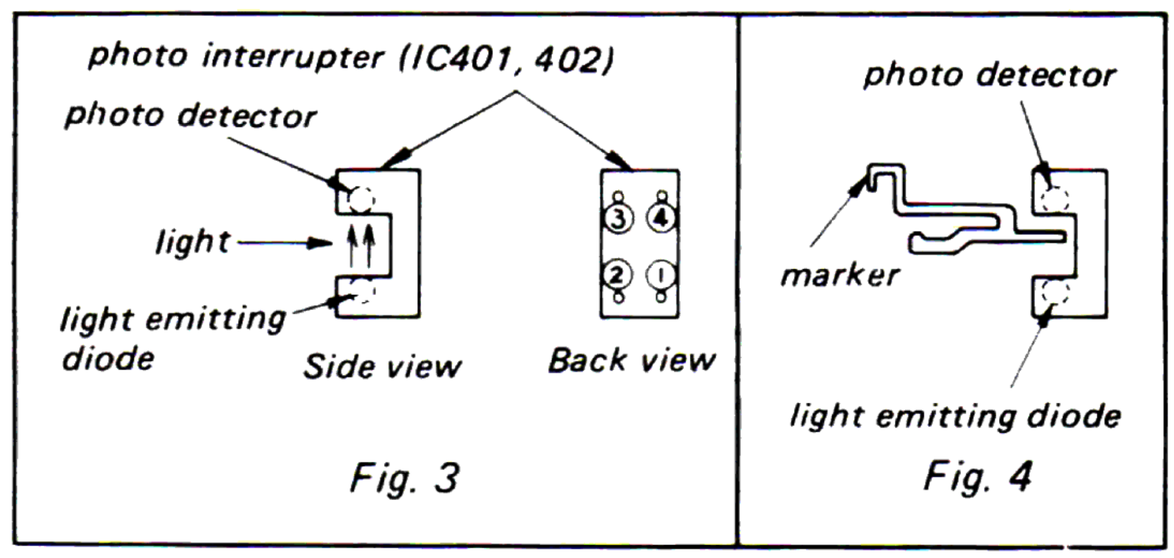

Fig. 3 Fig. 4

www.hifiengine.com

SECTION 2
DISASSEMBLY

- Follow the disassembly procedure in the numerical order given.

TOP COVER REMOVAL

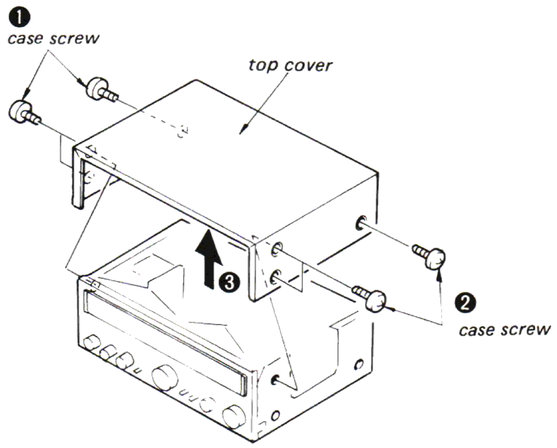

DIAL CORD STRINGING

- See page 9.

FRONT GLASS REMOVAL

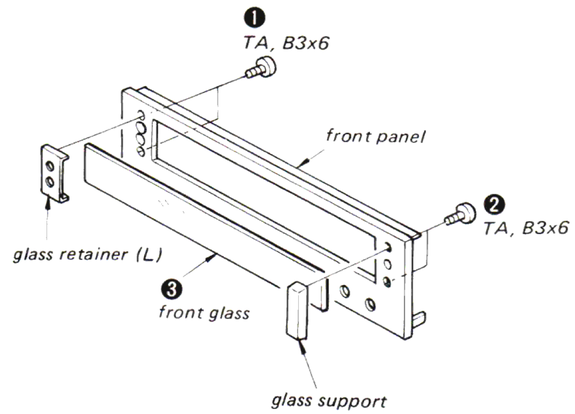

BOTTOM PLATE REMOVAL

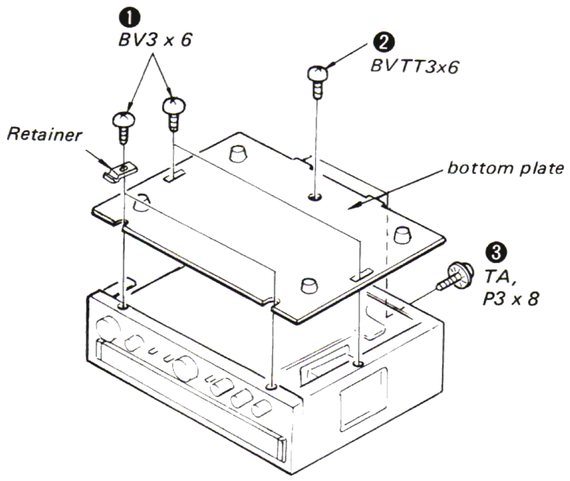

FRONT PANEL REMOVAL

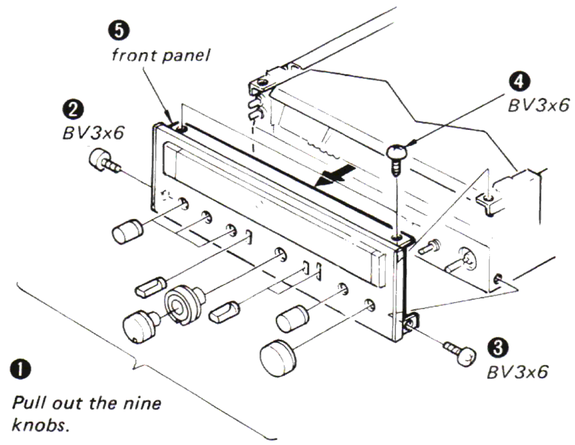

IC REPLACEMENT

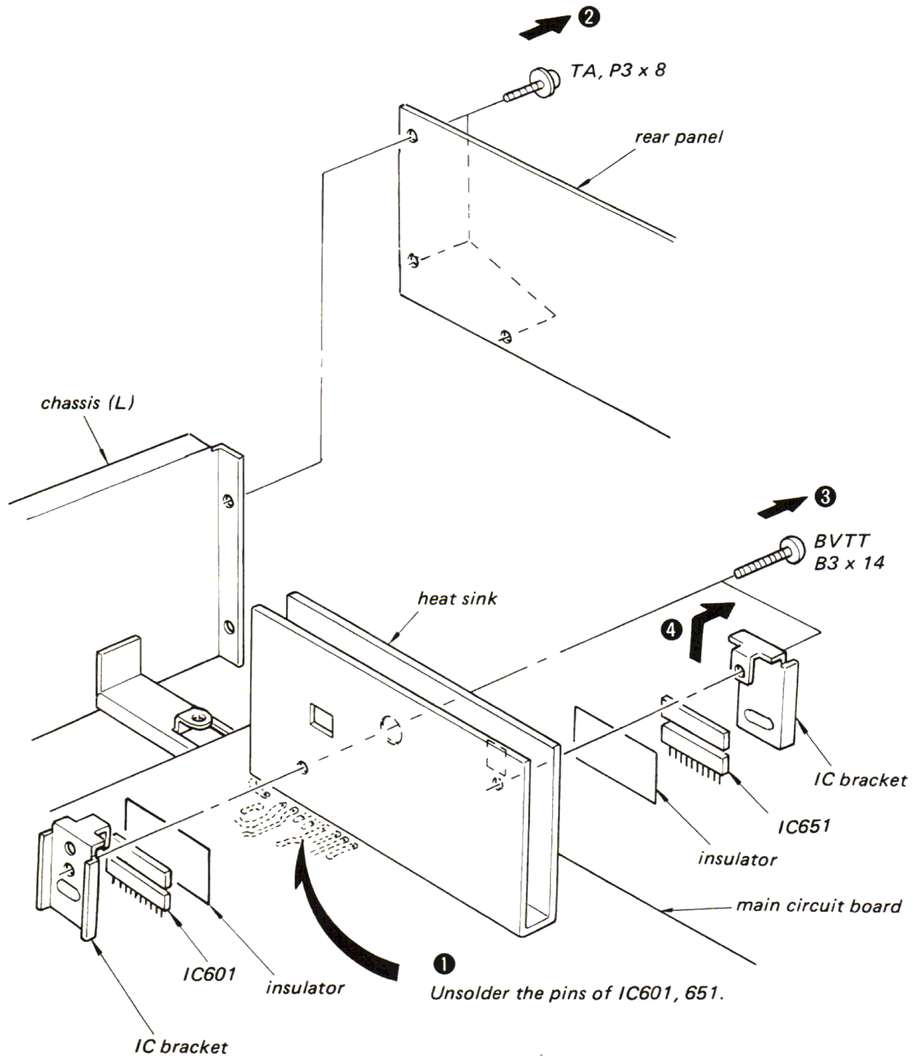

www.hifiengine.com

DIAL CORD STRINGING

1) Preparation

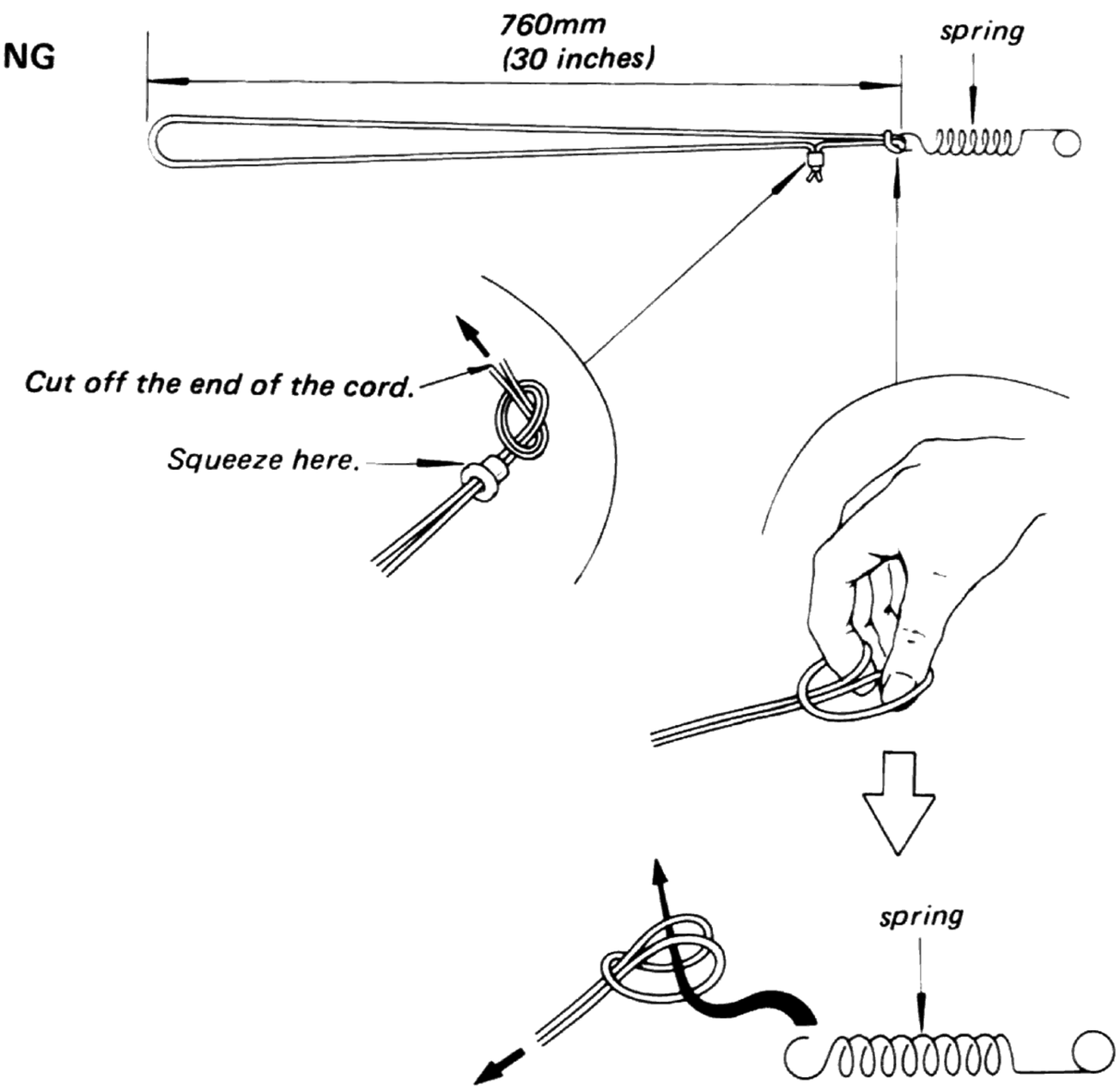

2) Stringing

Turn the tuning capacitor shaft fully clockwise and set the tuning drum so that the cutout is positioned as shown below.

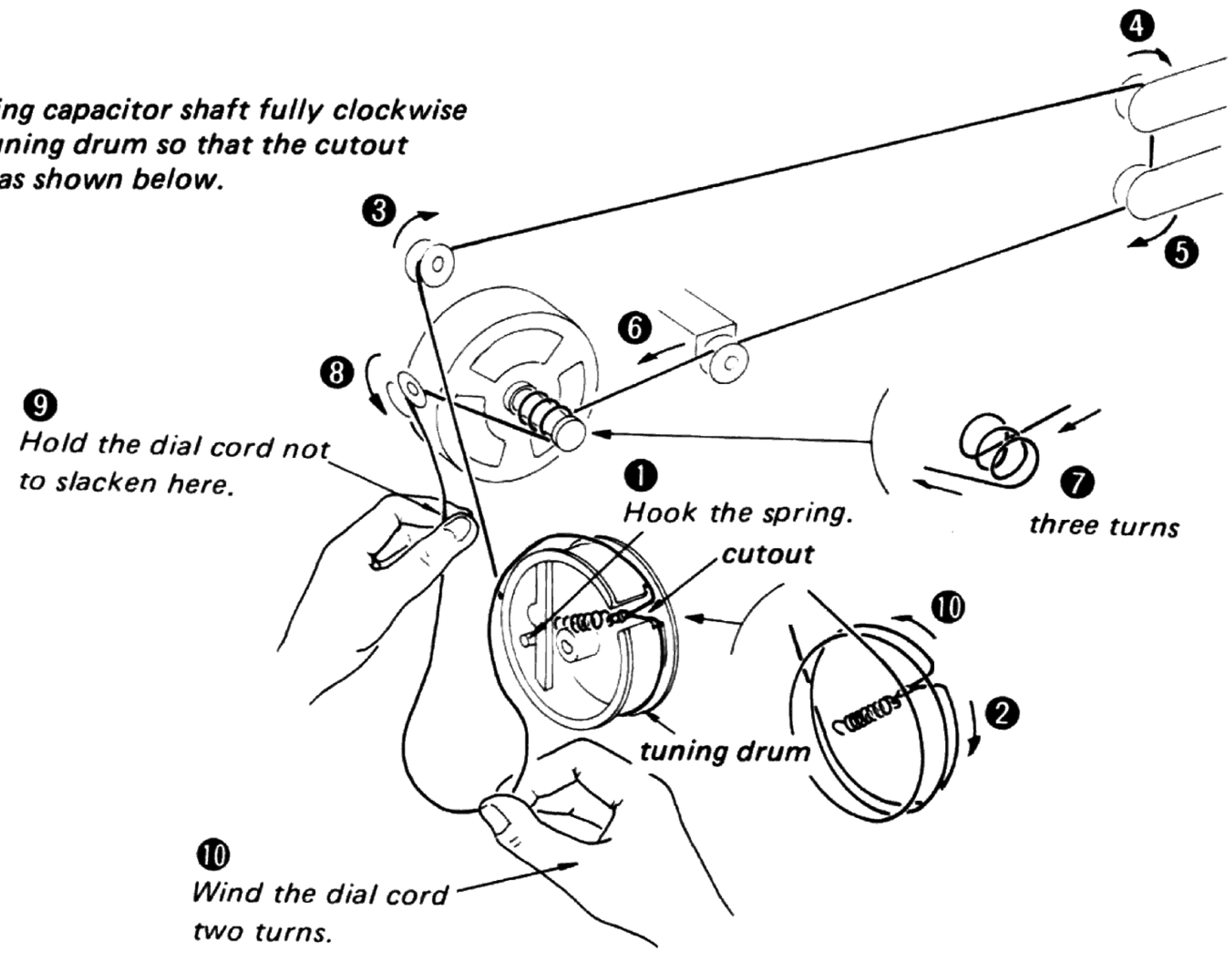

3) Dial Pointer Installation

❶ *Tune the receiver to the off-the-air signal and set the dial pointer to the frequency of the dial scale.*

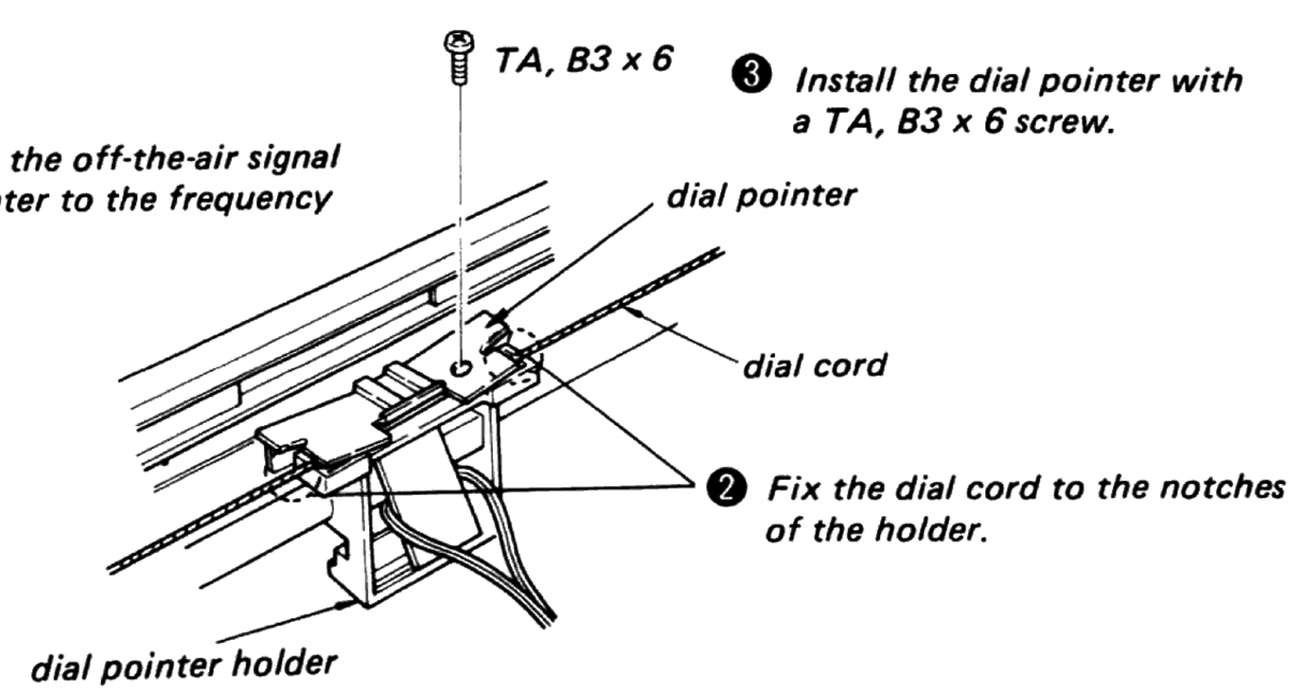

SECTION 3
ADJUSTMENTS

3-1. MW SECTION

Setting: FUNCTION Selector: TUNER
Band Selector: MW
MODE Selector: STEREO/FM-AM MUTE

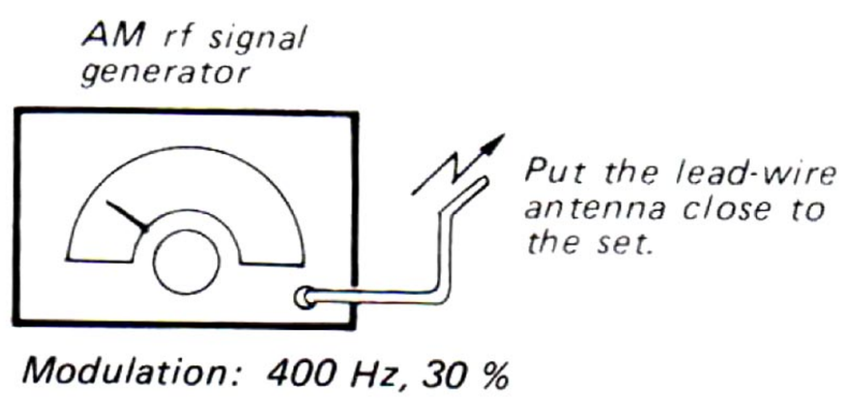

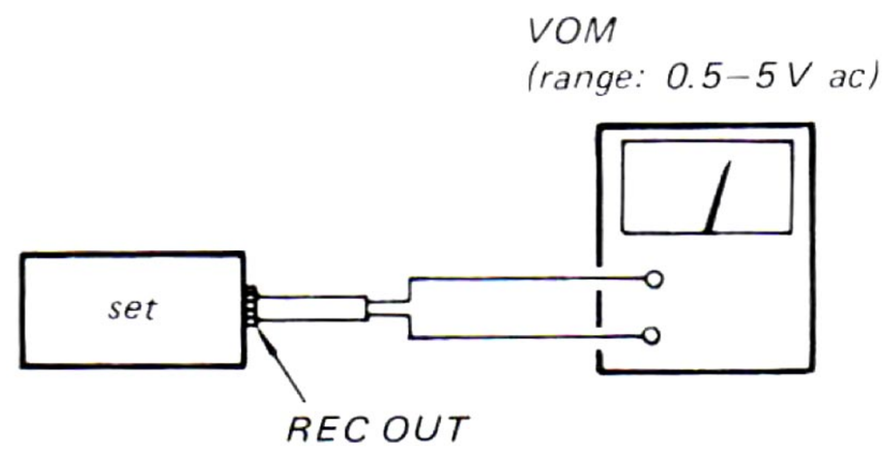

- Repeat the procedures in each adjustment several times, and the frequency coverage and tracking adjustments should be finally done by the trimmer capacitors.

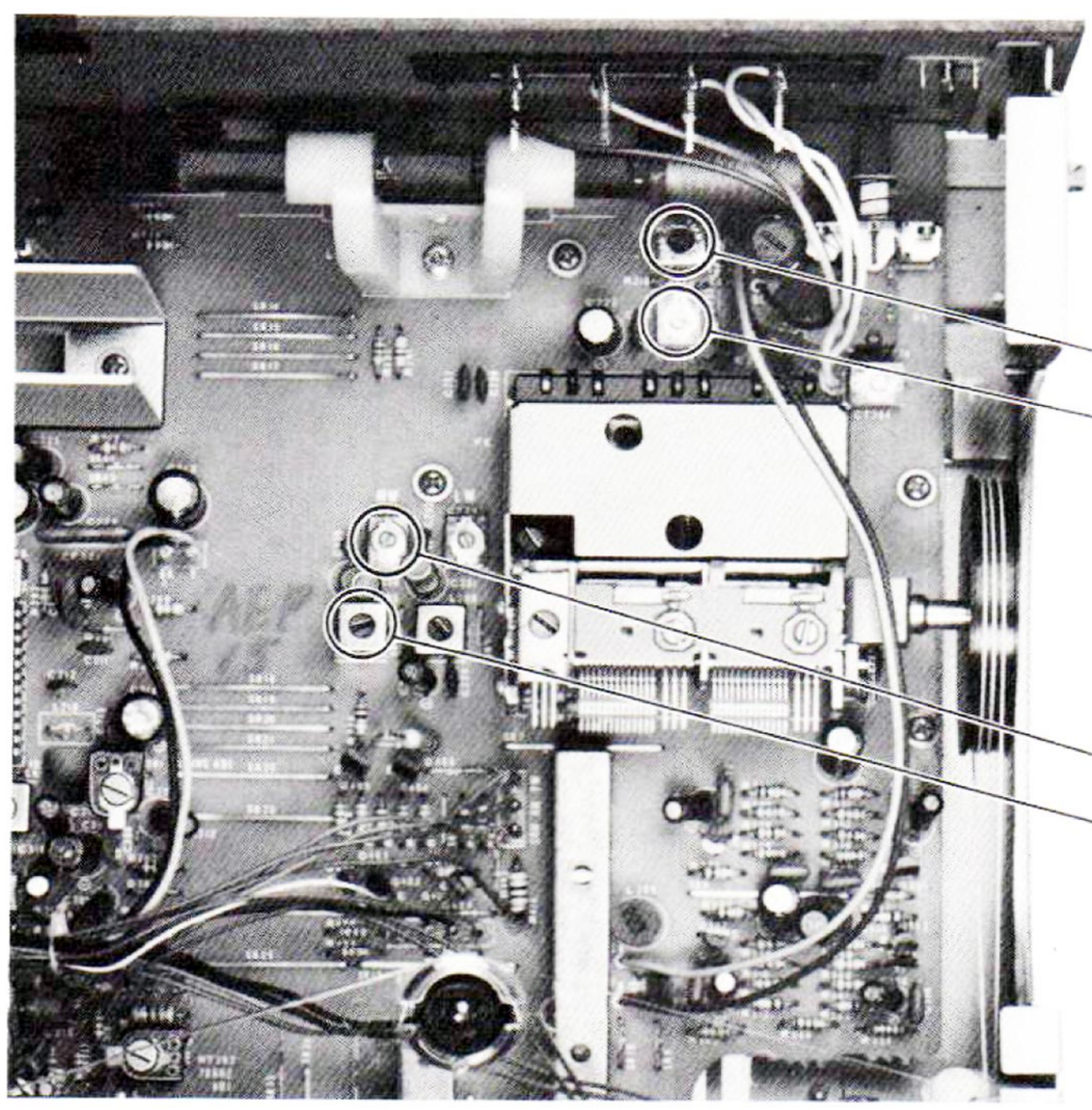

MW FREQUENCY COVERAGE ADJUSTMENT	
Adjust for a maximum reading on VOM.	
L203	*600 kHz*
CT203	*1400 kHz*

MW TRACKING ADJUSTMENT	
Adjust for a maximum reading on VOM.	
CT201	*1680 kHz*
L205	*520 kHz*

AM IF ALIGNMENT

CFT201 has been carefully adjusted at the factory, so the adjustment is unnecessary in the field.

www.hifiengine.com

3-2. LW SECTION

Setting: FUNCTION Selector: TUNER
Band Selector: LW
MODE Selector: STEREO/FM-AM MUTE
LW ANTENNA Selector: BUILT IN

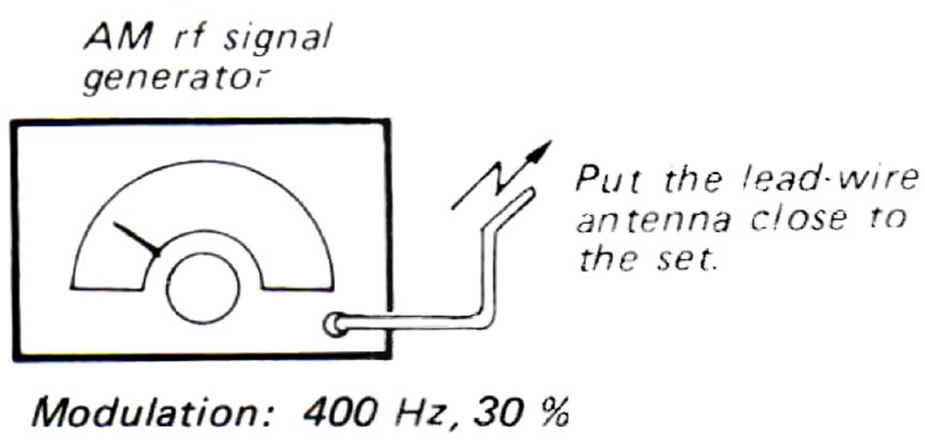

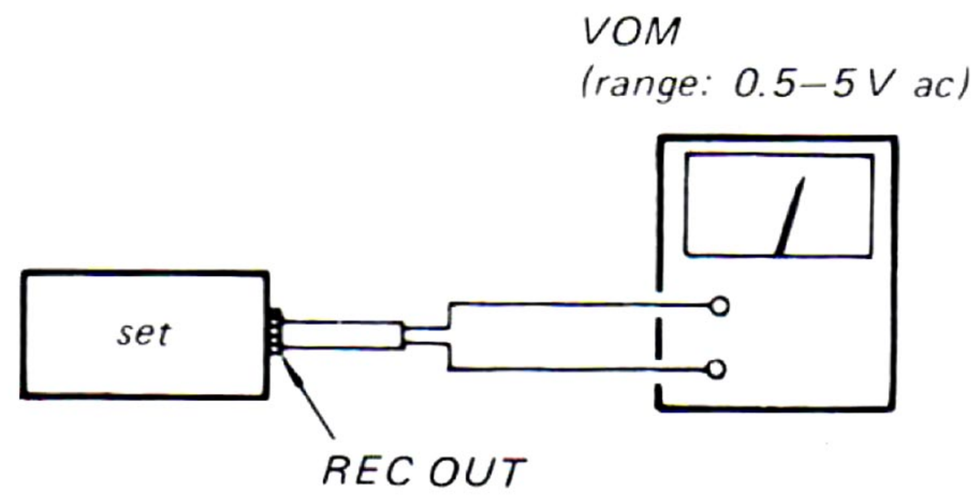

- Repeat the procedures in each adjustment several times, and the frequency coverage and tracking adjustments should be finally done by the trimmer capacitors.

LW EXT ANTENNA COIL ADJUSTMENT

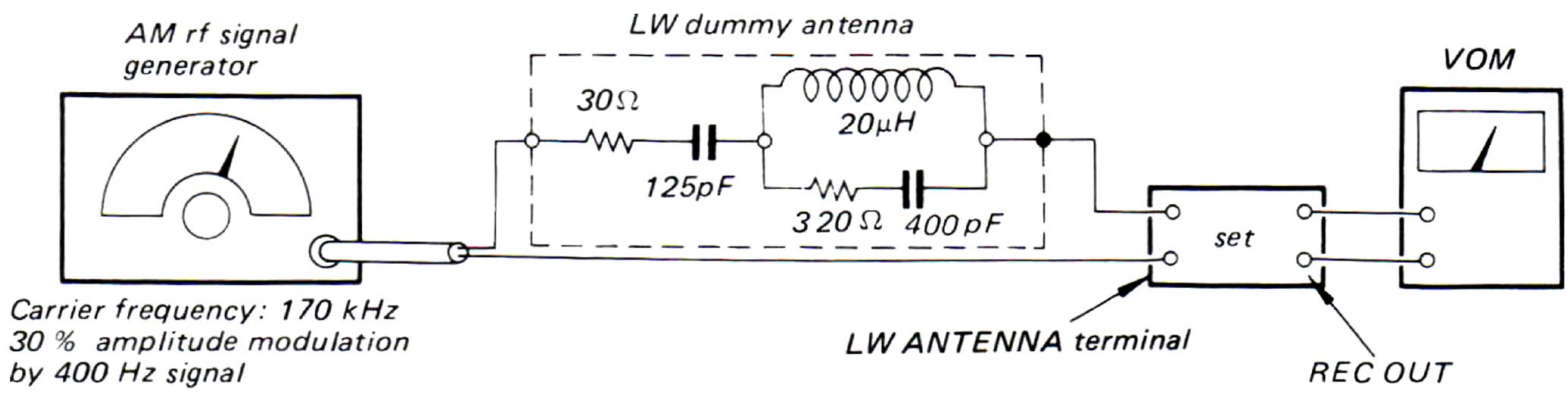

1. Set the ANTENNA LW switch to EXT position.
2. Tune the set to 170 kHz and adjust L202 for a maximum reading on VOM.

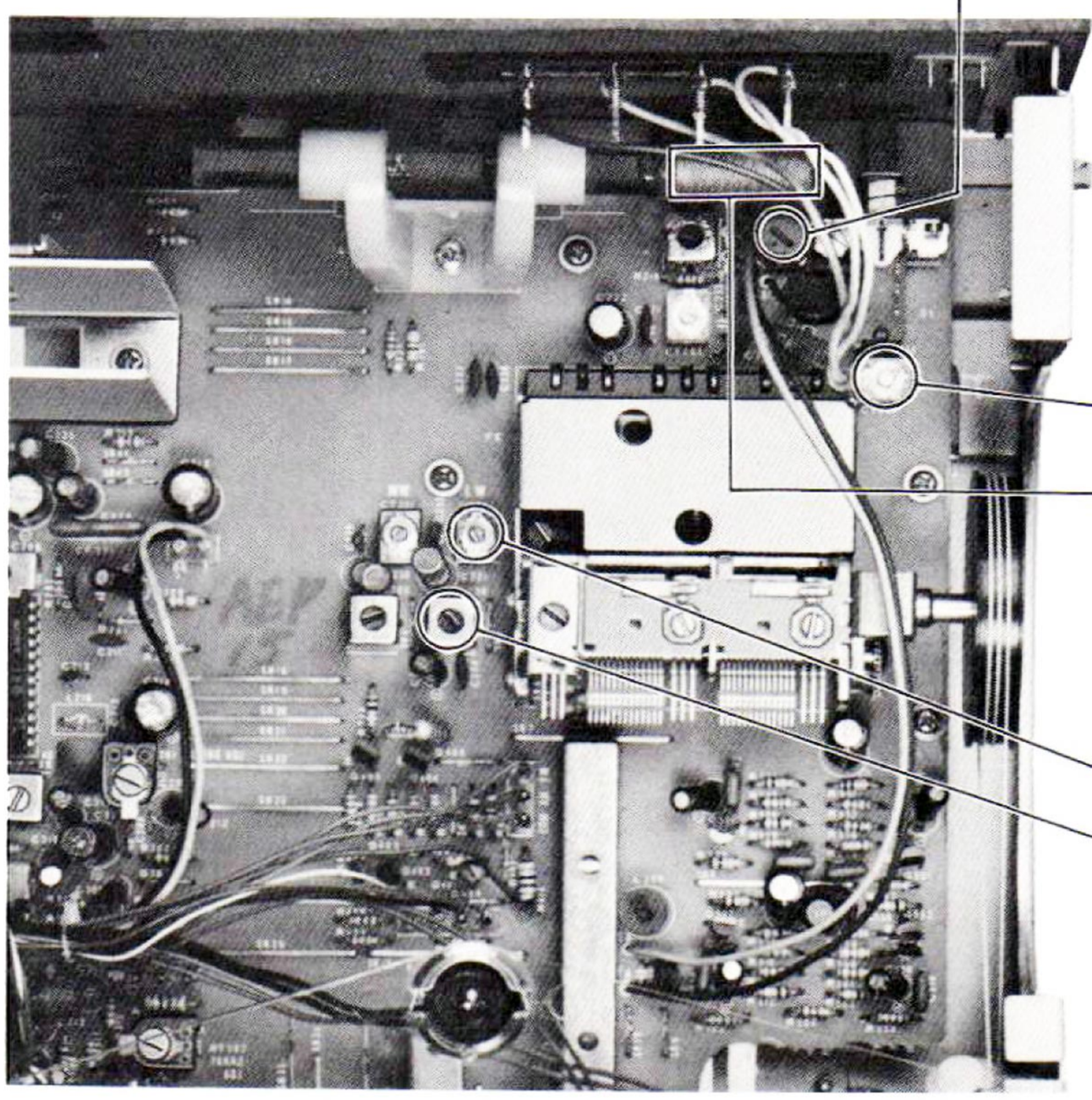

LW TRACKING ADJUSTMENT	
Adjust for a maximum reading on VOM.	
CT204	310 kHz
L201	170 kHz

LW FREQUENCY COVERAGE ADJUSTMENT	
Adjust for a maximum reading on VOM.	
CT202	365 kHz
L204	145 kHz

3-3. FM SECTION

Setting: FUNCTION Selector: TUNER
Band Selector: FM
MODE Selector: STEREO/FM-AM MUTE

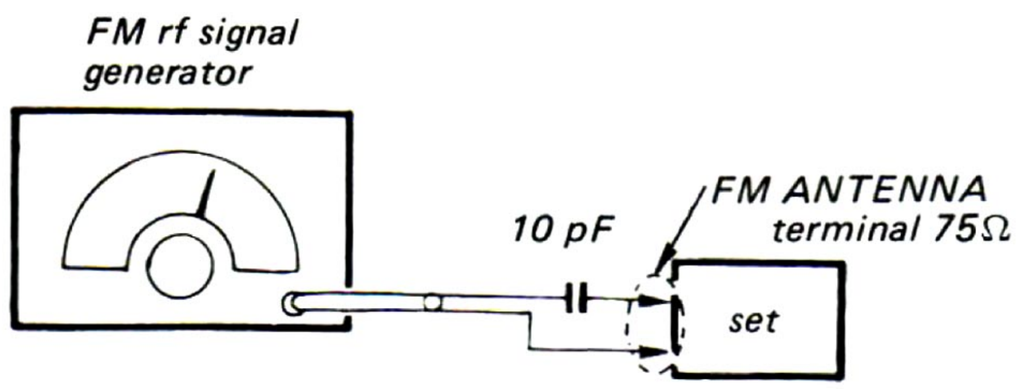

Modulation: 400 Hz, 75 kHz deviation (100 %)

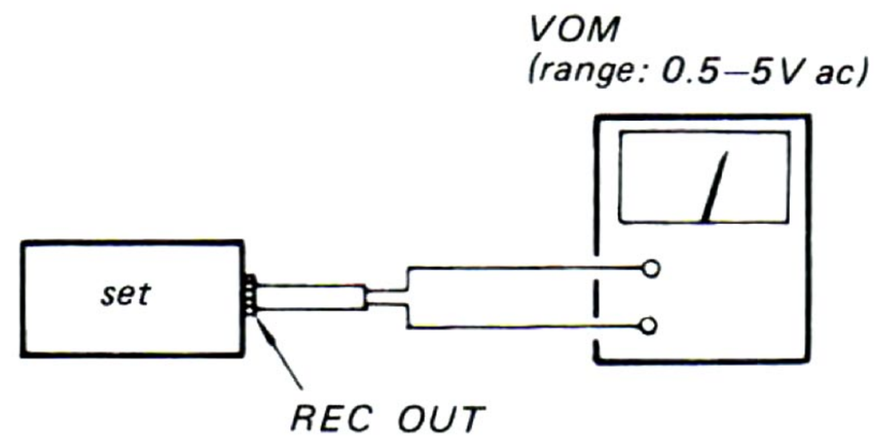

- Repeat the procedures in each adjustment several times, and the frequency coverage and tracking adjustments should be finally done by the trimmer capacitors.

FM FREQUENCY COVERAGE ADJUSTMENT	
Adjust for a maximum reading on VOM.	
87.1MHz (87.5MHz)	L3
108.5MHz (108MHz)	TC3

( ): in West Germany

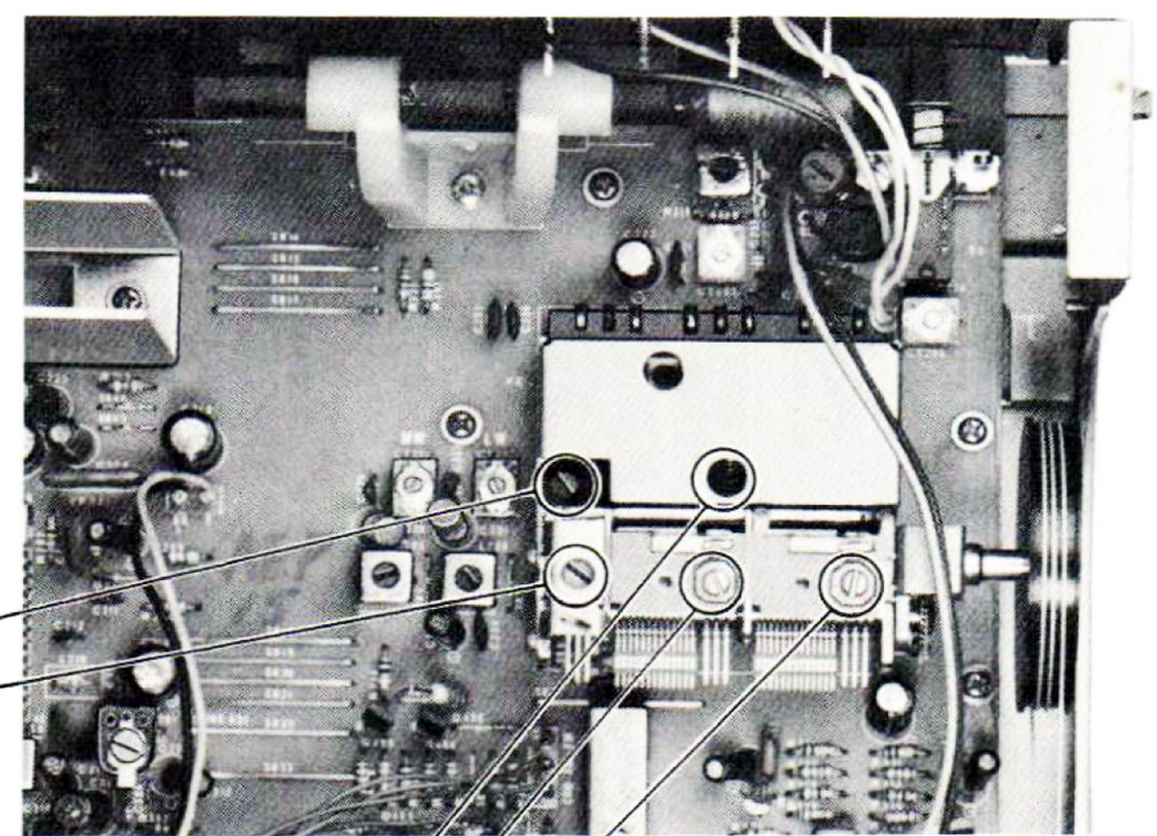

87.1MHz (87.5MHz)	L2
108.5MHz (108MHz)	TC2
	TC1
Adjust for a maximum reading on VOM.	
FM TRACKING ADJUSTMENT	

( ): in West Germany

www.hifiengine.com

MUTING LEVEL ADJUSTMENT

Setting: FUNCTION Selector: TUNER
Band Selector: FM
MODE Selector: STEREO/FM-AM MUTE

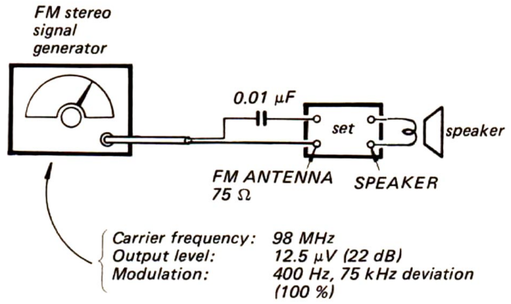

Procedure:

Adjust RT201 for the point that the sound is just muted.

FM STEREO SEPARATION ADJUSTMENT

Setting: FUNCTION Selector: TUNER
Band Selector: FM
MODE Selector: STEREO/FM-AM MUTE

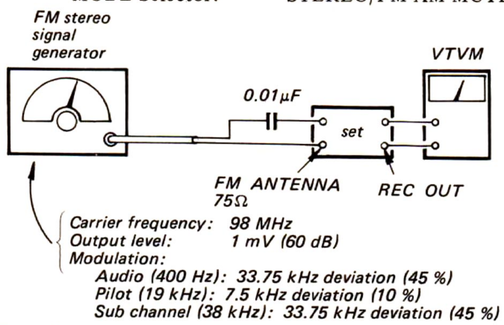

Procedure:

FM stereo signal generator output channel	VTVM connection	VTVM reading
L-CH	L-CH	Ⓐ
R-CH	L-CH	Ⓑ Adjust RT301 resistor for minimum reading.
R-CH	R-CH	Ⓒ
L-CH	R-CH	Ⓓ Adjust RT301 resistor for minimum reading.

L-CH Stereo separation: Ⓐ – Ⓑ
R-CH Stereo separation: Ⓒ – Ⓓ

The difference between separations Ⓐ→Ⓑ and Ⓒ→Ⓓ are to be equal.

FM DISCRIMINATOR ALIGNMENT 2

Setting: FUNCTION Selector: TUNER
Band Selector: FM
MODE Selector: MONO

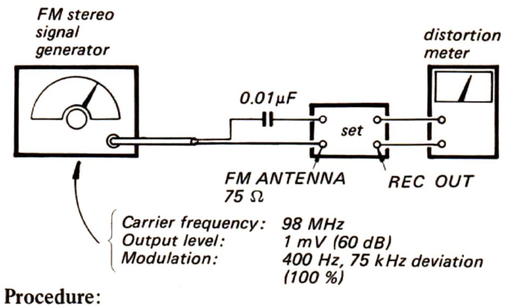

Procedure:

Adjust the black core (secondary side) of IFT201 for minimum distortion.

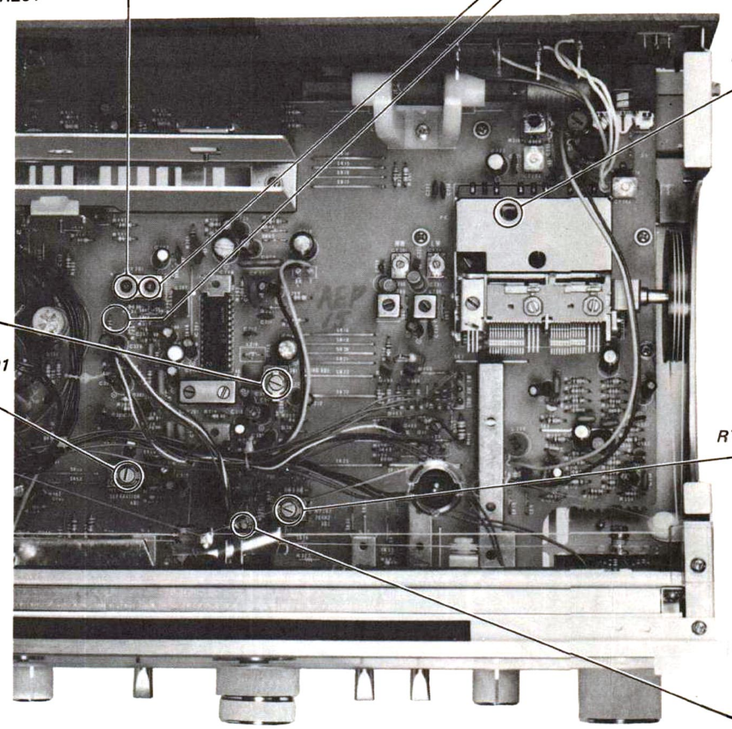

FM DISCRIMINATOR ALIGNMENT 1

Setting: FUNCTION Selector: TUNER
Band Selector: FM
MODE Selector: MONO
TUNING: Detuned position

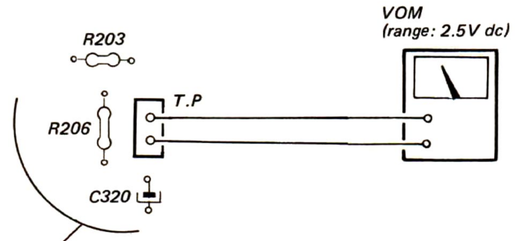

Procedure:

Adjust the blue core (primary-side) of IFT201 for 0 V reading on VOM.

Note: When replacing the ceramic filter (CF201), perform this alignment.

FM IF ALIGNMENT

Setting: FUNCTION Selector: TUNER
Band Selector: FM
MODE Selector: MONO

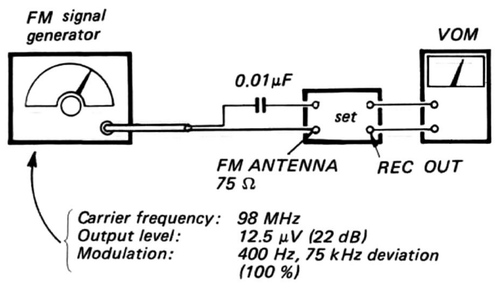

Procedure:

Adjust IFT1 for maximum reading on the VOM.

MPX ADJUSTMENT

Setting: FUNCTION Selector: TUNER
Band Selector: FM
MODE Selector: STEREO/FM-AM MUTE

A) Regular Method

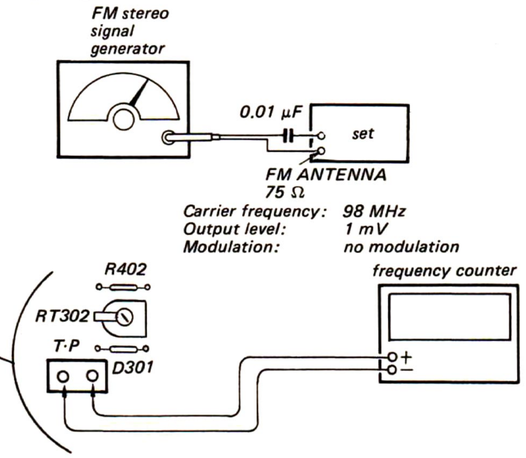

Procedure:

Adjust RT302 for 76 kHz ±100 Hz on the frequency counter.

B) Simple Method

Procedure:

1. Turn the set to the FM stereo broadcasting signal.
2. Turn RT302 clockwise or counterclockwise and memorize the lighting-up range of STEREO lamp.
3. Secure RT302 at the center in lighting-up range of both turns as shown below.

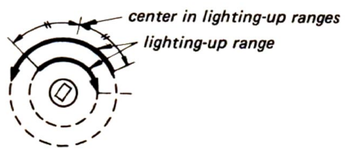

• IC Block Diagram

IC201 CX168

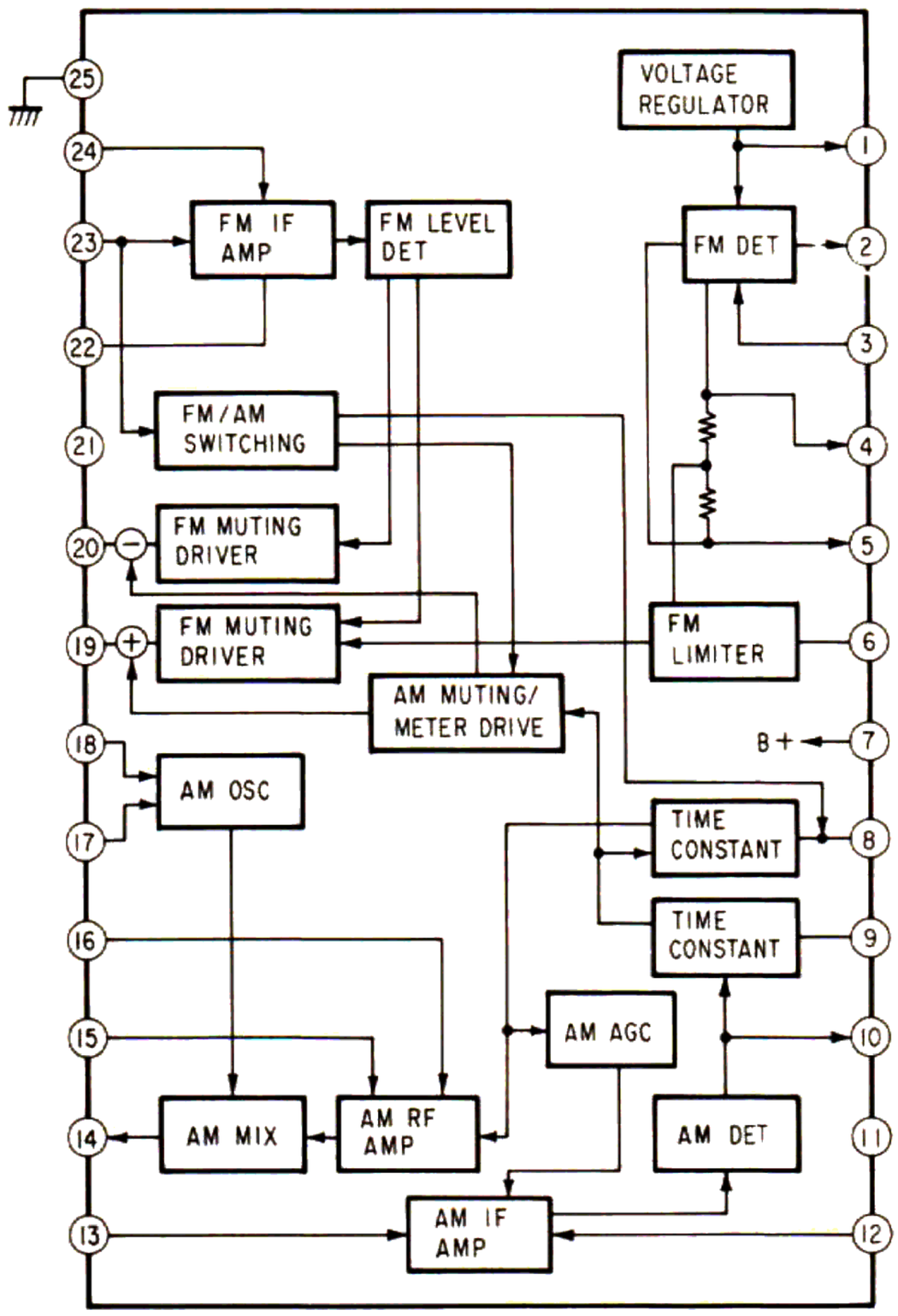

IC301 CX178

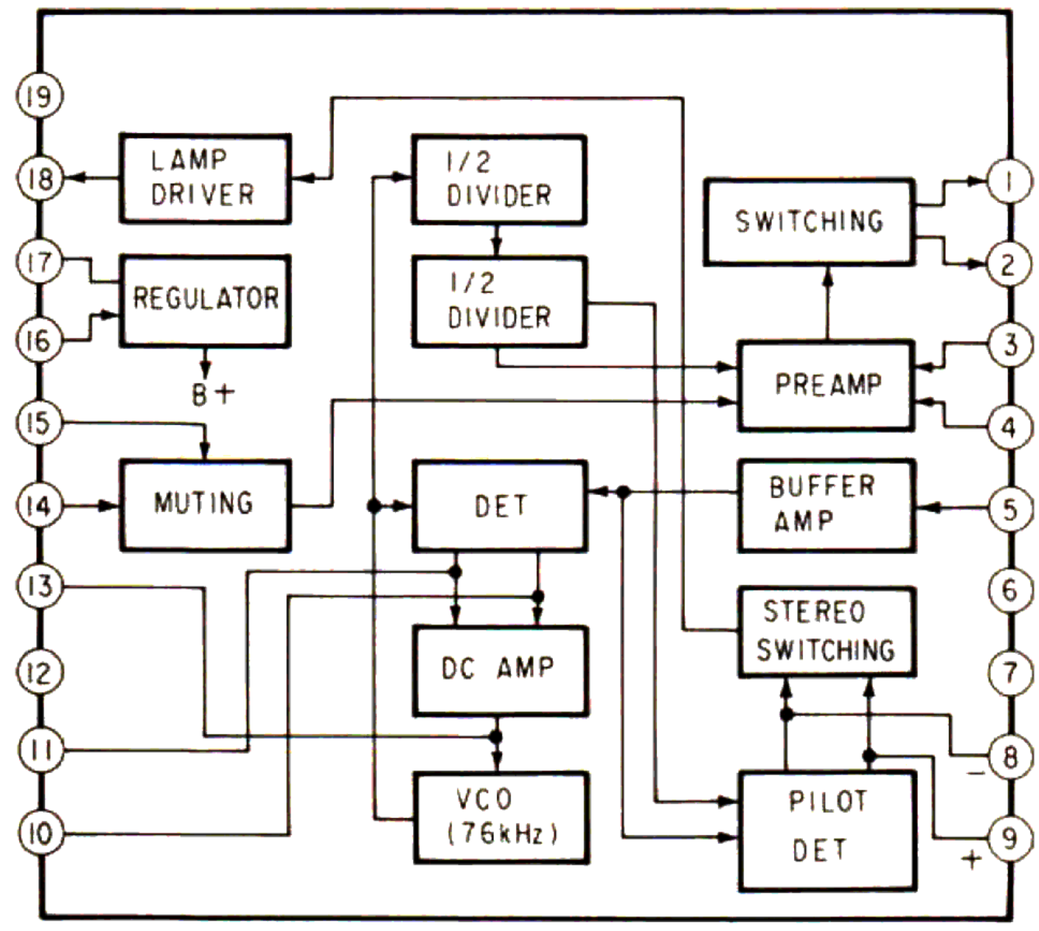

IC601, 651 HA1350S

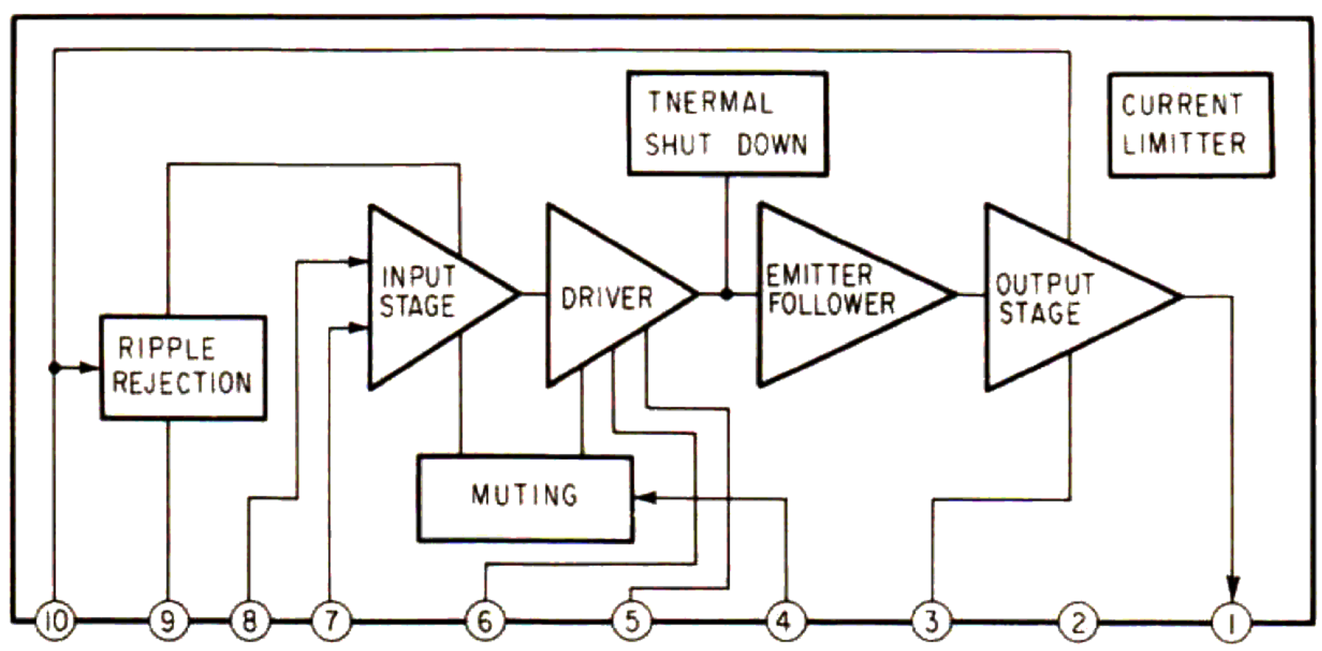

www.hifiengine.com

SECTION 4
DIAGRAMS

4-1. MOUNTING DIAGRAM

— Conductor Side —

- IC Block diagram: See page 15.
- **Replacement Semiconductors**

For replacement, use semiconductors except in ( ).

IC201: CX168

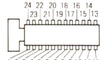

IC301: CX178

IC401, 402: SPI-201

IC601, 651: HA1350S

Q301, 302
Q401–403
Q702, 703 : **2SC1364 (2SC945)**

Q404, 405
Q704 : **2SA678 (2SA844)**

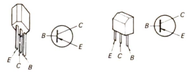

Q501, 502
Q551, 552 : **2SC1345**

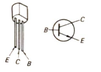

Q701: 2SC1173

D201
D301, 302
D401–406
D704 : **1S1555**

D701: S2VB20

D702: EQB01-16 (EQA01-16R)

D703: 10E2

Note:

- ⊡ : indicates side identified with part number.
- Color code of sleeving over the end of the jacket.

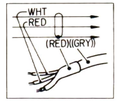

- ■ : part mounted on the conductor side.
- : B+ pattern.
- : B− pattern.
- Signal Path
  - —·—▸: L-CH
  - - - -▸: R-CH
- Readings are taken under no-signal (detuned) conditions with a VOM (20kΩ/V).
  - < > : AM
  - ( ) : STEREO

D	Q, IC
	IC651
	IC601
703	
201	
	IC201
405	
	704
406	404,405
	501 703
403	301
402 701	551
704	401,403,402
404	
	502
	552 302
	IC402
	IC301
	IC401
702	702,701
301	
401	

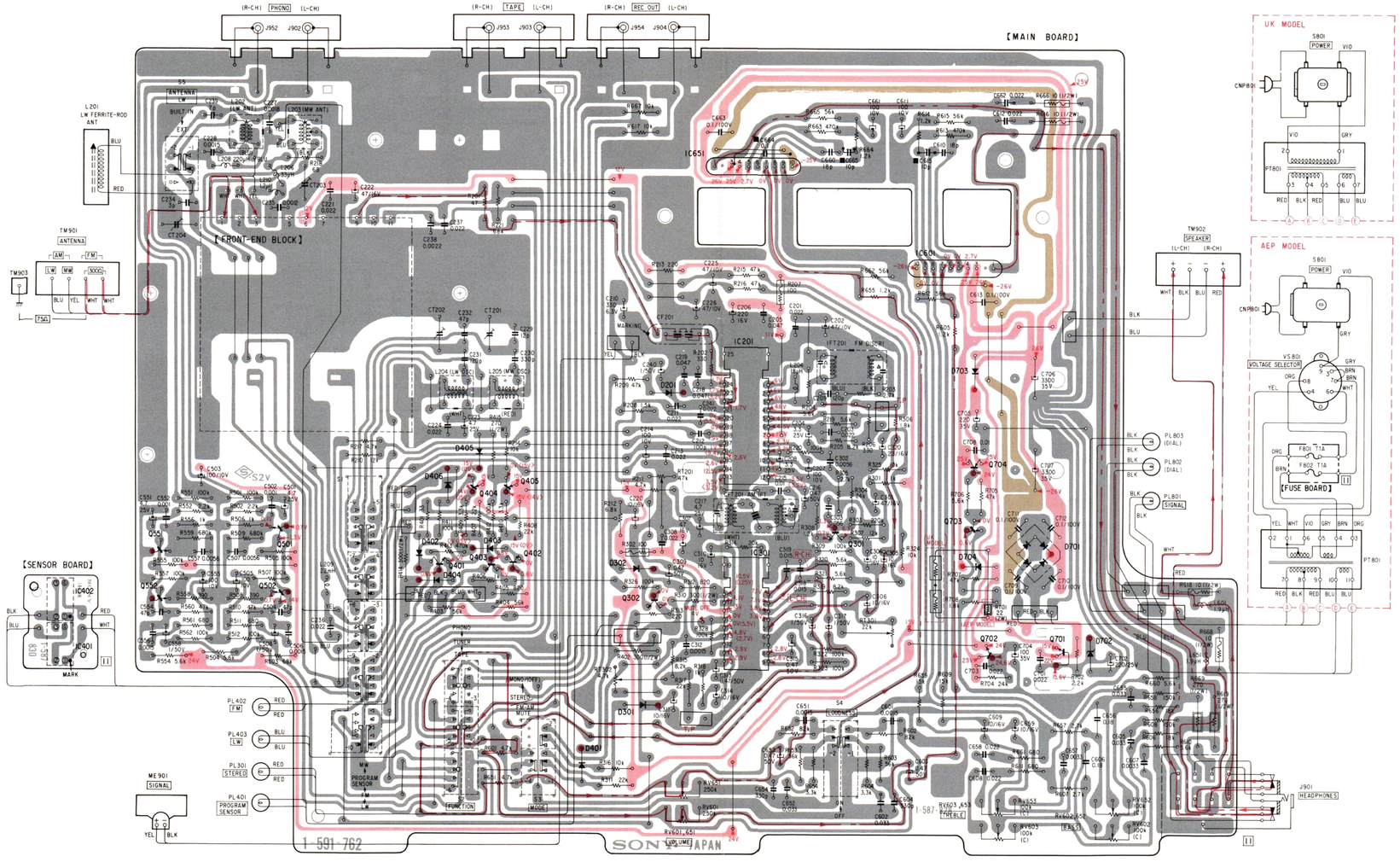

4-2. SCHEMATIC DIAGRAM

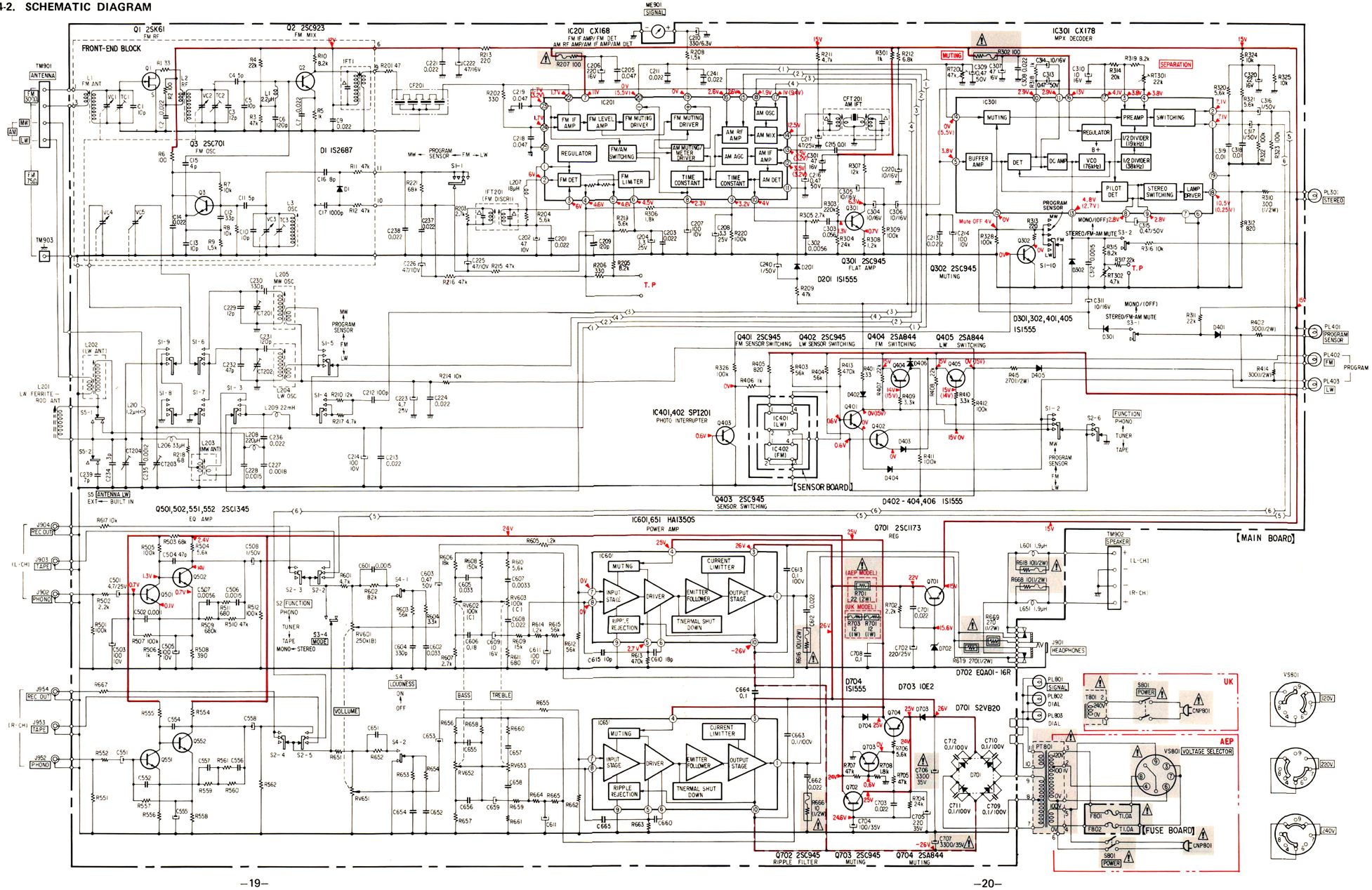

Note:

- All capacitors are in μF unless otherwise noted. pF : μμF 50WV or less are not indicated except for electrolytics.
- All resistors are in ohms, ¼W unless otherwise noted. kΩ : 1000Ω, MΩ : 1000kΩ
- : fusible resistor.
- : nonflammable resistor.
- : panel designation.
- : B+ bus.
- : adjustment for repair.
- : B− bus.
- Readings are taken under no-signal (detuned) conditions with a VOM (20kΩ/V).
  < > : AM
  ( ) : STEREO
- Voltage variations may be noted due to normal production tolerances.
- Switch

Ref. No.	Switch	Position
S1	Band Selector	FM
S2	FUNCTION	TUNER
S3	MODE	STEREO/FM-AM MUTE
S4	LOUDNESS	OFF
S5	ANTENNA LW	BUILT IN
S801	POWER	OFF

Note: The components identified by shading and mark ⚠ are critical for safety. Replace only with part number specified.

SECTION 5
EXPLODED VIEWS

5-1.

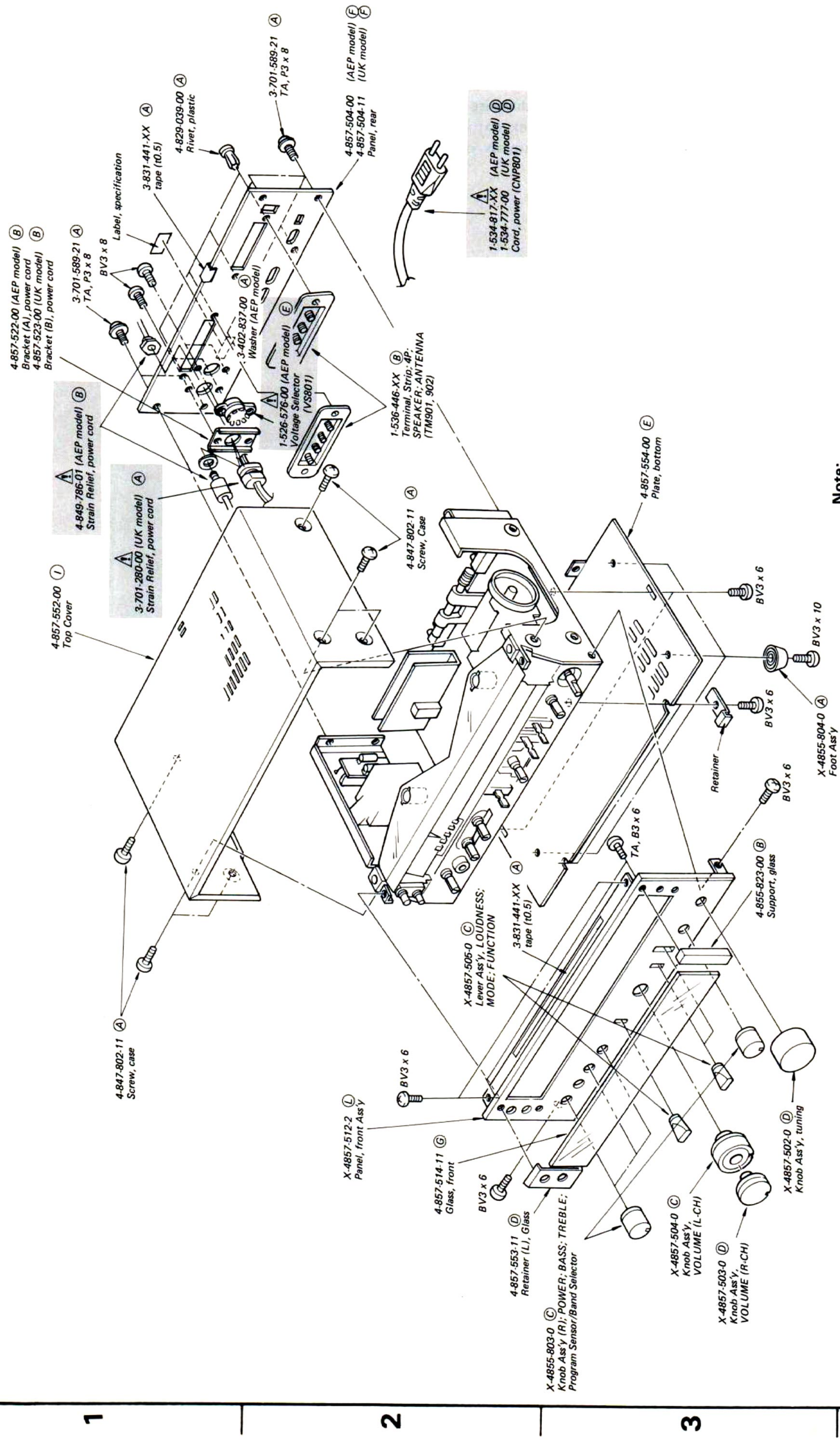

Note:

- Circled letters ((A) to (Z)) are applicable to European models only.
- Items with no part number and/or no description are not stocked because they are seldom required for routine service.

Note: The components identified by shading and mark ⚠ are critical for safety. Replace only with part number specified.

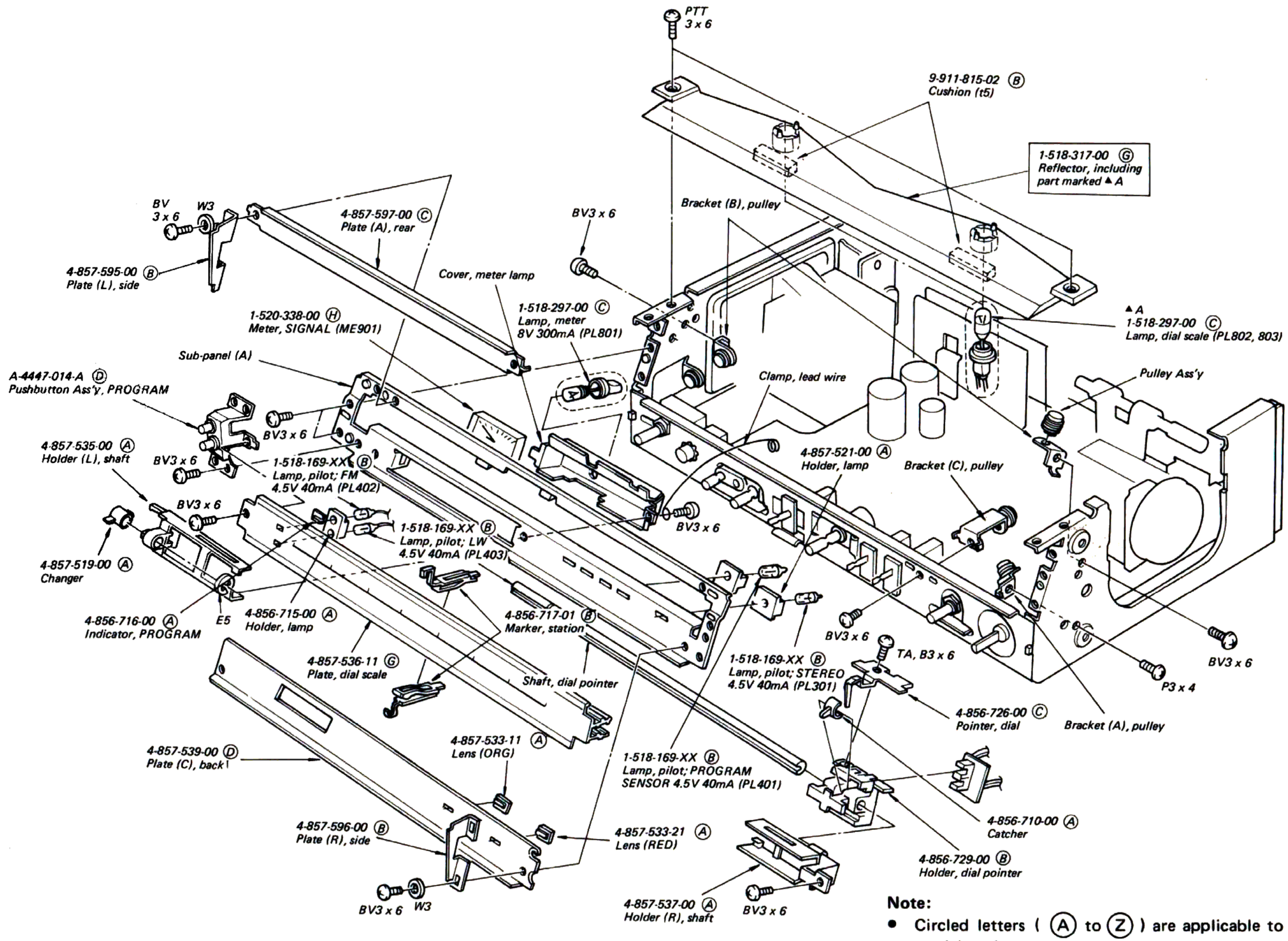

Note:

- Circled letters (Ⓐ to Ⓩ) are applicable to European models only.
- Items with no part number and/or no description are not stocked because they are seldom required for routine service.

www.hifiengine.com

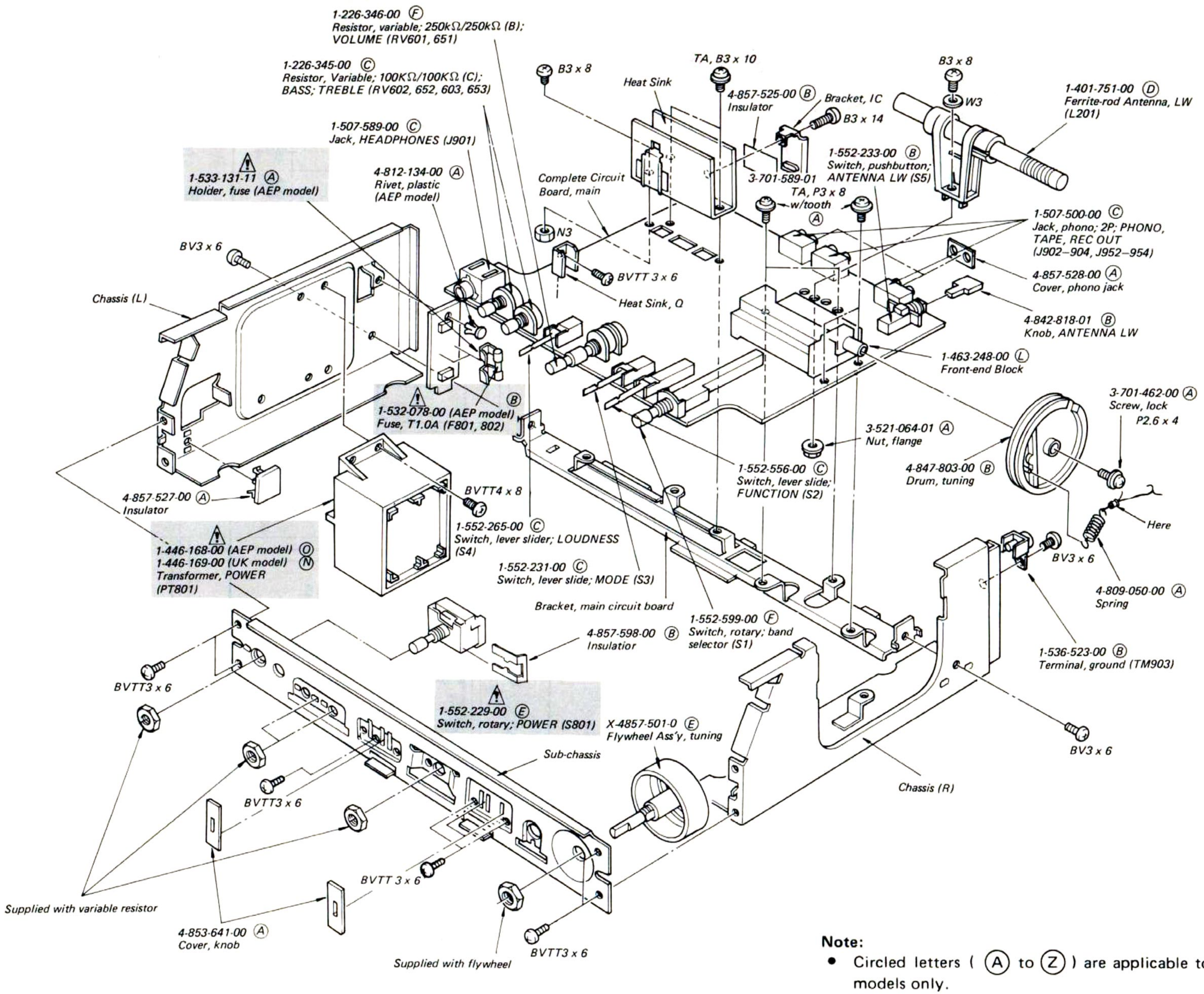

Note: The components identified by shading and mark ⚠ are critical for safety. Replace only with part number specified.

Note:

- Circled letters ((A) to (Z)) are applicable to European models only.
- Items with no part number and/or no description are not stocked because they are seldom required for routine service.

SECTION 6
ELECTRICAL PARTS LIST

• Circled letters (Ⓐ to Ⓩ) are applicable to European models only.

Ref. No.	Part No.	Description
		SEMICONDUCTORS
		ICs
IC201	8-751-680-01	Ⓛ CX168
IC301	8-751-780-00	Ⓚ CX178
IC401,402	8-719-902-01	Ⓖ SPI-201
IC601,651	8-759-313-50	Ⓚ HA1350S
		Transistors
⇒ Q301, 302 ⇒ Q401–403 ⇒ Q702, 703	8-729-663-47	Ⓑ 2SC1364
⇒ Q404, 405 Q704	8-727-788-00	Ⓒ 2SA678
Q501, 502 Q551, 552	8-729-334-58	Ⓒ 2SC1345
Q701	8-729-217-33	Ⓔ 2SC1173
		Diodes
D201 D301, 302 D401–406 D704	8-719-815-55	Ⓑ 1S1555
D701	8-719-502-20	Ⓕ S2VB20
⇒ D702	8-719-931-16	Ⓓ EQB01-16
D703	8-719-200-02	Ⓑ 10E2
		COILS
L201	1-401-751-00	Ⓓ LW Antenna, ferrite-rod
L202	1-401-709-00	Ⓒ LW Antenna
L203	1-401-728-00	Ⓑ MW Antenna
L204	1-405-813-00	Ⓑ LW Osc
L205	1-405-797-00	Ⓑ MW Osc
L207	1-407-741-00	Ⓑ 18μH microinductor
L209	1-407-210-XX	Ⓐ 22mH microinductor
		TRANSFORMERS AND FILTER
CF201	1-527-346-00	Ⓒ Filter, ceramic
CFT201	1-404-087-00	Ⓓ AM IFT
IFT201	1-404-011-00	Ⓒ Discri, FM
PT801	⚠ 1-446-168-00	Ⓛ Power (AEP model)
PT801	⚠ 1-446-169-00	Ⓛ Power (UK model)

• ⇒: Due to standardization, interchangeable replacements may be substituted for parts specified in the diagrams.

Ref. No.	Part No.	Description		
		CAPACITORS		
All capacitors are in μF and ceramic unless otherwise noted. 50WV or less are not indicated except for electrolytics. pF : μμF, elect : electrolytic				
C201	1-101-924-00	Ⓐ 0.022		
C202	1-121-352-00	Ⓐ 47	10V	elect
C203	1-101-924-00	Ⓐ 0.022		
C204	1-121-392-00	Ⓐ 3.3	25V	elect
C205	1-101-925-00	Ⓐ 0.047		
C206	1-121-421-00	Ⓑ 220	16V	elect
C207	1-121-414-00	Ⓐ 100	10V	elect
C208	1-121-392-00	Ⓐ 3.3	25V	elect
C209	1-102-816-00	Ⓐ 120p		
C210	1-121-751-00	Ⓐ 330	6.3V	elect
C211	1-101-924-00	Ⓐ 0.022		
C212	1-102-973-00	Ⓐ 100p		
C213	1-101-924-00	Ⓐ 0.022		
C214	1-121-414-00	Ⓐ 100	10V	elect
C215	1-101-923-00	Ⓐ 0.01		
C216	1-121-726-00	Ⓐ 0.47	50V	elect
C217	1-121-395-00	Ⓐ 4.7	25V	elect
C218, 219	1-101-925-00	Ⓐ 0.047		
C220	1-121-651-00	Ⓐ 10	16V	elect
C221	1-101-924-00	Ⓐ 0.022		
C222	1-121-409-00	Ⓐ 47	16V	elect
C223	1-121-395-00	Ⓐ 4.7	25V	elect
C224	1-101-924-00	Ⓐ 0.022		
C225, 226	1-121-352-00	Ⓐ 47	10V	elect
C227	1-108-561-00	Ⓐ 0.0018		mylar
C228	1-108-559-00	Ⓐ 0.0015		mylar
C229	1-102-262-00	Ⓐ 12p		
C230	1-104-065-00	Ⓐ 330p		polystyrol
C231	1-104-055-00	Ⓐ 120p		polystyrol
C232	1-101-880-00	Ⓐ 47p		
C234	1-102-940-00	Ⓐ 3p		
C235	1-102-118-00	Ⓐ 0.0012		
C236–238	1-101-924-00	Ⓐ 0.022		
C239	1-102-944-00	Ⓐ 7p		
C240	1-121-391-00	Ⓐ 1	50V	elect
C241	1-101-924-00	Ⓐ 0.022		

Note: The components identified by shading and mark ⚠ are critical for safety. Replace only with part number specified.

• Circled letters (Ⓐ to Ⓩ) are applicable to Europen models only.

Ref. No.	Part No.	Description		
C301	1-121-409-00	Ⓐ 47	16V	elect
C302	1-108-573-00	Ⓐ 0.0056		mylar
C303	1-108-846-00	Ⓐ 0.056		mylar
C304–306	1-121-651-00	Ⓐ 10	16V	elect
C307	1-123-192-00	Ⓐ 47	16V	elect
C308	1-101-924-00	Ⓐ 0.022		
C309	1-121-726-00	Ⓐ 0.47	50V	elect
C310, 311	1-121-651-00	Ⓐ 10	16V	elect
C312	1-104-081-00	Ⓐ 0.0015		polystyrol
C313	1-121-726-00	Ⓐ 0.47	50V	elect
C314	1-121-651-00	Ⓐ 10	16V	elect
C315	1-121-726-00	Ⓐ 0.47	50V	elect
C316, 317	1-121-391-00	Ⓐ 1	50V	elect
C318, 319	1-108-837-00	Ⓐ 0.01		mylar
C320	1-121-479-00	Ⓐ 22	16V	elect
C501, 551	1-121-395-00	Ⓐ 4.7	25V	elect
C502, 552	1-108-227-00	Ⓐ 0.001		mylar
C503, 553	1-121-414-00	Ⓐ 100	10V	elect
C504, 554	1-101-880-00	Ⓐ 47p		
C505, 555	1-121-414-00	Ⓐ 100	10V	elect
C506, 556	1-108-559-00	Ⓐ 0.0015		mylar
C507, 557	1-108-573-00	Ⓐ 0.0056		mylar
C508, 558	1-121-391-00	Ⓐ 1	50V	elect
C601, 651	1-108-559-00	Ⓐ 0.0015		mylar
C602, 652	1-108-843-00	Ⓐ 0.033		mylar
C603, 653	1-121-726-00	Ⓐ 0.47	50V	elect
C604, 654	1-102-820-00	Ⓐ 330p		
C605, 655	1-108-843-00	Ⓐ 0.033		mylar
C606, 656	1-108-364-00	Ⓐ 0.18		mylar
C607, 657	1-108-567-00	Ⓐ 0.0033		mylar
C608, 658	1-108-242-00	Ⓐ 0.022		mylar
C609, 659	1-121-651-00	Ⓐ 10	16V	elect
C610, 660	1-102-953-00	Ⓐ 18p		
C611, 661	1-123-196-00	Ⓐ 100	10V	elect
C612, 662	1-108-242-00	Ⓐ 0.022		mylar
C613, 663	1-108-389-00	Ⓑ 0.1	100V	mylar
C615, 665	1-102-947-00	Ⓐ 10p		
C664	1-108-849-11	Ⓐ 0.1		mylar
C701	1-101-924-00	Ⓐ 0.022		
C702	1-121-436-00	Ⓐ 220	25V	elect
C703	1-101-924-00	Ⓐ 0.022		
C704	1-121-357-00	Ⓑ 100	35V	elect
C705	1-121-261-00	Ⓑ 220	35V	elect

Note: The components identified by shading and mark ⚠ are critical for safety. Replace only with part number specified.

Ref. No.	Part No.	Description		
C706, 707	⚠ 1-123-118-00	Ⓔ 3300	35V	elect
C708	1-108-837-00	Ⓐ 0.01		mylar
C709–712	1-108-389-00	Ⓑ 0.1	100V	mylar
CT201–204	1-141-171-00	Ⓑ Trimmer		
		RESISTORS		
All resistors are in ohms. Common ¼W carbon resistors are omitted. Refer to the list on the last page for their part numbers.				
R207	⚠ 1-217-399-00	Ⓑ 100	¼W	fusible (nonflammable)
R302	⚠ 1-212-881-00	Ⓐ 100	¼W	fusible (nonflammable)
R310	1-244-860-00	Ⓐ 300	½W	carbon
R402, 414	1-244-860-00	Ⓐ 300	½W	carbon
R415	1-244-859-00	Ⓐ 270	½W	carbon
R616, 666	⚠ 1-212-958-00	Ⓐ 10	½W	fusible (nonflammable)
R619, 669	⚠ 1-211-624-00	Ⓑ 270	½W	carbon (nonflammable)
R618, 668	⚠ 1-212-958-00	Ⓐ 10	½W	fusible (nonflammable)
R701	⚠ 1-206-471-00	Ⓐ 22	2W	metal oxide (nonflammable) (AEP model)
R701	⚠ 1-213-060-00	Ⓐ 10	1W	fusible (nonflammable) (UK model)
R703	⚠ 1-213-062-00	Ⓑ 22	1W	fusible (nonflammable) (UK model)
RT201	1-224-647-XX	Ⓑ 47k, adjustable; muting		
RT301	1-224-646-XX	Ⓑ 22k, adjustable; separation		
RT302	1-224-644-XX	Ⓑ 4.7k, adjustable; vco		
RV601,651	1-226-346-00	Ⓔ 250k/250k (B), variable; VOLUME		
RV602,652	1-226-345-00	Ⓒ 100k/100k (C), variable; BASS		
RV603,653	1-226-345-00	Ⓒ 100k/100k (C), variable; TREBLE		
		SWITCHES		
S1	1-552-599-00	Ⓕ Rotary, band selector		
S2	1-552-556-00	Ⓒ Lever Slide, FUNCTION		
S3	1-552-231-00	Ⓒ Lever Slide, MODE		
S4	1-552-265-00	Ⓒ Lever Slide, LOUDNESS		
S5	1-552-233-00	Ⓒ Pushbutton, ANTENNA LW		
S801	⚠ 1-552-229-00	Ⓕ Rotary, POWER		

www.hifiengine.com

- Circled letters (Ⓐ to Ⓩ) are applicable to European models only.

Ref. No.	Part No.	Description
		LAMPS
PL301	1-518-169-XX	Ⓑ Pilot, STEREO (4.5V 40mA)
PL401	1-518-169-XX	Ⓑ Pilot, PROGRAM SENSOR (4.5V 40mA)
PL402	1-518-169-XX	Ⓑ Pilot, FM (4.5V 40mA)
PL403	1-518-169-XX	Ⓑ Pilot, LW (4.5V 40mA)
PL801	1-518-297-00	Ⓒ Meter (8.0V 300mA)
	1-518-317-00	Ⓖ Reflector, w/lamp
		MISCELLANEOUS
CNP801	⚠1-534-777-00	Ⓓ Cord, power (UK model)
CNP801	⚠1-534-817-XX	Ⓓ Cord, power (AEP model)
F801, 802	⚠1-532-078-00	Ⓑ Fuse, T1.0A (AEP model)
FE	1-463-248-00	Ⓛ Front-End Block
J901	1-507-589-00	Ⓒ Jack, HEADPHONES
J902, 952 J903, 953 J904, 954	1-507-500-00	Ⓒ Jack, 2P; PHONO; TAPE; REC OUT
ME901	1-520-338-00	Ⓗ Meter, SIGNAL
TM901,902	1-536-446-00	Ⓑ Terminal, strip; 4p; SPEAKER; ANTENNA
TM903	1-536-523-00	Ⓑ Terminal, ground
VS801	⚠1-526-576-00	Ⓔ Voltage Selector (AEP model)
	⚠1-533-131-11	Ⓐ Holder, Fuse (AEP model)

ACCESSORIES AND PACKING MATERIALS

Part No.	Description
X-4490-002-1	Ⓐ Cloth Ass'y, polishing
1-501-184-00	Ⓒ Antenna, ribbon; FM
1-501-193-00	Ⓑ Antenna Wire, MW/LW
3-701-622-00	Ⓐ Bag, plastic (UK model)
3-701-630-00	Ⓐ Bag, plastic
3-770-577-11	Ⓔ Manual, instruction
4-857-503-00	Ⓓ Carton
4-857-573-00	Ⓑ Cushion, lower (left)
4-857-574-00	Ⓑ Cushion, lower (right)
4-857-575-00	Ⓑ Cushion, upper
4-857-599-11	Ⓑ Leaflet for AM Antenna
4-891-037-00	Ⓑ Bag, plastic

Note: The components identified by shading and mark ⚠ are critical for safety. Replace only with part number specified.

www.hifiengine.com

1/4 WATT CARBON RESISTORS Ⓐ

Note: Circled letter Ⓐ is applicable to European models only.

Ω	Part No.	Ω	Part No.	Ω	Part No.	Ω	Part No.	Ω	Part No.	Ω	Part No.	Ω	Part No.
1.0	1-244-601-11	10	1-244-625-11	100	1-244-649-11	1.0k	1-244-673-11	10k	1-244-697-11	100k	1-244-721-11	1.0M	1-244-745-11
1.1	1-244-602-11	11	1-244-626-11	110	1-244-650-11	1.1k	1-244-674-11	11k	1-244-698-11	110k	1-244-722-11	1.1M	1-244-746-11
1.2	1-244-603-11	12	1-244-627-11	120	1-244-651-11	1.2k	1-244-675-11	12k	1-244-699-11	120k	1-244-723-11	1.2M	1-244-747-11
1.3	1-244-604-11	13	1-244-628-11	130	1-244-652-11	1.3k	1-244-676-11	13k	1-244-700-11	130k	1-244-724-11	1.3M	1-244-748-11
1.5	1-244-605-11	15	1-244-629-11	150	1-244-653-11	1.5k	1-244-677-11	15k	1-244-701-11	150k	1-244-725-11	1.5M	1-244-749-11
1.6	1-244-606-11	16	1-244-630-11	160	1-244-654-11	1.6k	1-244-678-11	16k	1-244-702-11	160k	1-244-726-11	1.6M	1-244-750-11
1.8	1-244-607-11	18	1-244-631-11	180	1-244-655-11	1.8k	1-244-679-11	18k	1-244-703-11	180k	1-244-737-11	1.8M	1-244-751-11
2.0	1-244-608-11	20	1-244-632-11	200	1-244-656-11	2.0k	1-244-680-11	20k	1-244-704-11	200k	1-244-728-11	2.0M	1-244-752-11
2.2	1-244-609-11	22	1-244-633-11	220	1-244-657-11	2.2k	1-244-681-11	22k	1-244-705-11	220k	1-244-729-11	2.2M	1-244-753-11
2.4	1-244-610-11	24	1-244-634-11	240	1-244-658-11	2.4k	1-244-682-11	24k	1-244-706-11	240k	1-244-730-11	2.4M	1-244-754-11
2.7	1-244-611-11	27	1-244-635-11	270	1-244-659-11	2.7k	1-244-683-11	27k	1-244-707-11	270k	1-244-731-11	2.7M	1-244-755-11
3.0	1-244-612-11	30	1-244-636-11	300	1-244-660-11	3.0k	1-244-684-11	30k	1-244-708-11	300k	1-244-732-11	3.0M	1-244-756-11
3.3	1-244-613-11	33	1-244-637-11	330	1-244-661-11	3.3k	1-244-685-11	33k	1-244-709-11	330k	1-244-733-11	3.3M	1-244-757-11
3.6	1-244-614-11	36	1-244-638-11	360	1-244-662-11	3.6k	1-244-686-11	36k	1-244-710-11	360k	1-244-734-11	3.6M	1-244-758-11
3.9	1-244-615-11	39	1-244-639-11	390	1-244-663-11	3.9k	1-244-687-11	39k	1-244-711-11	390k	1-244-735-11	3.9M	1-244-759-11
4.3	1-244-616-11	43	1-244-640-11	430	1-244-664-11	4.3k	1-244-688-11	43k	1-244-712-11	430k	1-244-736-11	4.3M	1-244-760-11
4.7	1-244-617-11	47	1-244-641-11	470	1-244-665-11	4.7k	1-244-689-11	47k	1-244-713-11	470k	1-244-737-11	4.7M	1-244-761-11
5.1	1-244-618-11	51	1-244-642-11	510	1-244-666-11	5.1k	1-244-690-11	51k	1-244-714-11	510k	1-244-738-11	5.1M	1-244-762-11
5.6	1-244-619-11	56	1-244-643-11	560	1-244-667-11	5.6k	1-244-691-11	56k	1-244-715-11	560k	1-244-739-11		
6.2	1-244-620-11	62	1-244-644-11	620	1-244-668-11	6.2k	1-244-692-11	62k	1-244-716-11	620k	1-244-740-11		
6.8	1-244-621-11	68	1-244-645-11	680	1-244-669-11	6.8k	1-244-693-11	68k	1-244-717-11	680k	1-244-741-11		
7.5	1-244-622-11	75	1-244-646-11	750	1-244-670-11	7.5k	1-244-694-11	75k	1-244-718-11	750k	1-244-742-11		
8.2	1-244-623-11	82	1-244-647-11	820	1-244-671-11	8.2k	1-244-695-11	82k	1-244-719-11	820k	1-244-743-11		
9.1	1-244-624-11	91	1-244-648-11	910	1-244-672-11	9.1k	1-244-696-11	91k	1-244-720-11	910k	1-244-744-11		

HARDWARE NOMENCLATURE

Screw: – P 3 x 10

- *L: Length in mm*
- *D: Diameter in mm*
- *Type of head*
- *Indicated slotted-head only. Unless otherwise indicated, it means cross-recessed head (Phillips type).*

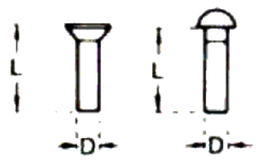

Nut, Washer, Retaining ring: N 3

- *Diameter of usable screw or shaft*
- *Reference designation*

Reference Designation	Shape	Description	Remarks
		SCREWS	
P		pan-head screw	binding-head (B) screw for replacement
PWH		pan-head screw with washer face	binding-head (B) screw and flat washer for replacement
PS PSP		pan-head screw with spring washer	binding-head (B) screw and spring washer for replacement
PSW PSPW		pan-head screw with spring and flat washers	binding-head (B) screw and spring and flat washers for replacement
R		round-head screw	binding-head (B) screw for replacement
K		flat-countersunk-head screw	
RK		oval-countersunk-head screw	
B		binding-head screw	
T		truss-head screw	binding-head (B) screw for replacement
F		flat-fillister-head screw	
RF		fillister-head screw	
BV		braizer-head screw	

Reference Designation	Shape	Description	Remarks
		SELF-TAPPING SCREWS	
TA		self-tapping screw	ex: TA, P 3 x 10
PTP		pan-head self-tapping screw	binding-head self-tapping (TA, B) screw for replacement
PTPWH		pan-head self-tapping screw with washer face	binding-head self tapping (TA, B) screw and flat washer for replacement
PTTWH		pan-head thread-rolling screw with washer face	binding-head (B) screw and flat washer for replacement
		SET SCREWS	
SC		set screw	
SC		hexagon-socket set screw	ex: SC 2.6 x 4, hexagon socket
		NUT	
N		nut	
		WASHERS	
W		flat washer	
SW		spring washer	
LW		internal-tooth lock washer	ex: LW3, internal
LW		external-tooth lock washer	ex: LW3, external
		RETAINING RINGS	
E		retaining ring	
G		grip-type retaining ring	

Sony Corporation

9-958-552-01

78I0475-1
Printed in Japan

www.hifiengine.com