THE HALLICRAFTERS INC.

MODEL S-29
Sky Traveller

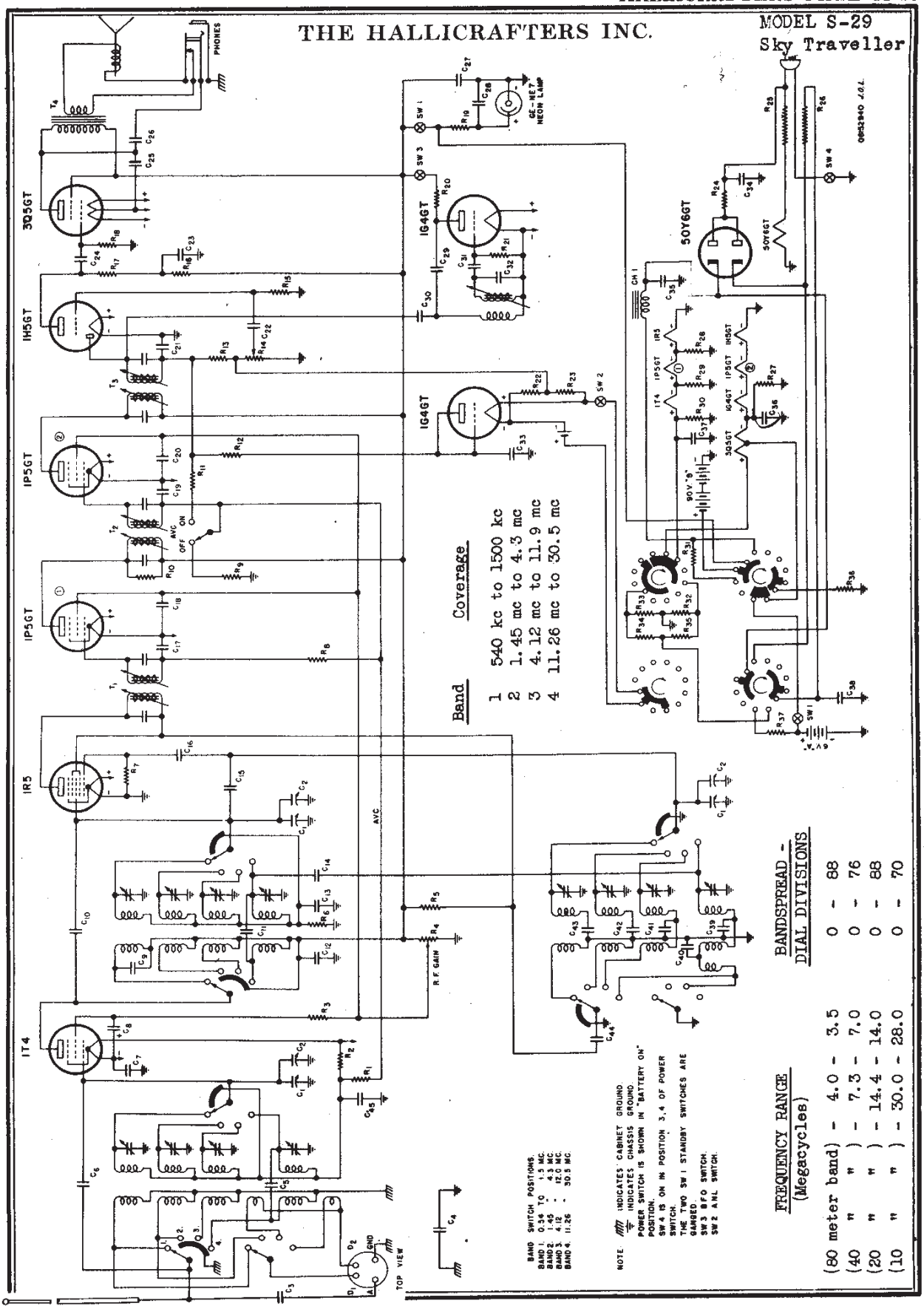

©John F. Rider, Publisher

Courtesy Nostalgia Air

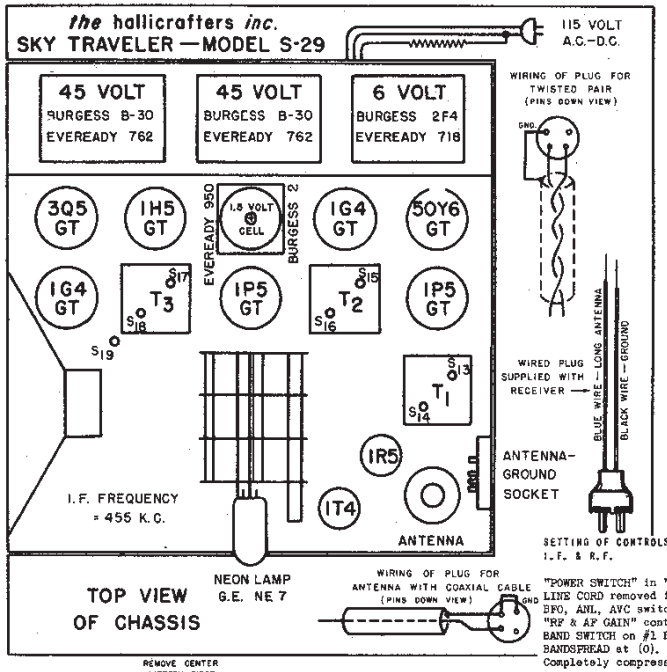

SETTING OF CONTROLS PRIOR TO ALIGNMENT I.F. & R.F.

"POWER SWITCH" in "BAT" position.
LINE CORD removed from outlet.
BFO, ANL, AVC switches "OFF".
"RF & AF GAIN" controls for maximum vol
BAND SWITCH on #1 Band.
BANDSPREAD at (0).
Completely compress the telescopic ant

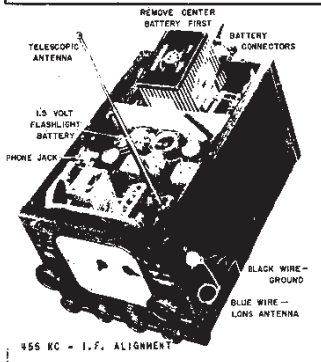

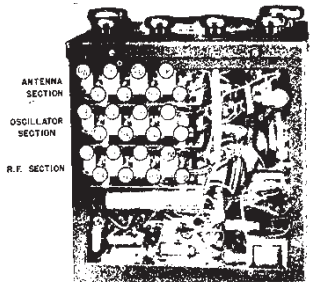

BOTTOM VIEW

455 KC - I.F. ALIGNMENT

Set "MAIN TUNING" control at 1500 kc.
Have antenna plug removed from antenna socket.
Tune generator to 455 kc.
Connect low side (GND) of generator to chassis.
Connect high side (HOT) of generator to lug on rear Stator section (R.F.) of main tuning condenser through a 0.1 mfd condenser.
Proceed to adjust the screws S_{13} to S_{18} inclusive protruding from the tops of the I.F. transformers, T_1, T_2 and T_3, for maximum output.

Without changing the frequency of the generator after completing I.F. alignment - turn BFO switch "ON" and remove modulation from the signal generator. Adjust screw S_{19} to the desired tone (approximately 1000 cycles).

NOTE: - It is also possible to adjust the BFO without the aid of the signal generator by tuning a signal to exact resonance with the BFO switch "OFF" - with BFO "ON" adjust S_{19} to desired tone.

Insert "long-antenna" plug, furnished with receiver, into antenna socket and connect generator as indicated in chart below. A condenser in the receiver in series with the blue lead compensates for the reduction in capacity when the antenna is folded and the covers removed - thus, a dummy antenna is unnecessary.

NOTE: - On #3 and 4 Bands, it may be necessary to "rock" the main tuning condenser to compensate for slight shifts in oscillator frequency. When adjusting the trimmers and slugs for maximum gain, the oscillator frequency is 455 kc. less than the signal frequency on #4 band.

Connect hot lead of signal generator to BLUE wire of antenna plug and low side of generator to BLACK wire. A dummy antenna is unnecessary.

Band	Signal Generator Frequency and Receiver Dial Setting	Oscillator Frequency Relative to Signal	HIGH FREQUENCY END: Adjust Osc. with	HIGH FREQUENCY END: Adjust Trimmers For Max. Gain	LOW FREQUENCY END: Adjust Osc. with	LOW FREQUENCY END: Adjust Slugs For Max. Gain
1	1.4 mc	Above	C_B	C_A C_C		
	.6				S_2	S_1 S_3
2	4.0	Above	C_E	C_D C_F		
	1.6				S_5	S_4 S_6
3	11.0	Above	C_H	C_G C_J		
	5.0				S_8	S_7 S_9
4	28.0	Below	C_L	C_K C_M		
	14.0				S_{11}	S_{10} S_{12}

No.	Capacity	Voltage	Type	No.	Ohms	Wattage
C1	Main Tuning Gang		air	R1	2 megs	1/3
2	Bandspread Gang		air	2	2 megs	1/3
3	25 mmfd		ceramicon	3	9000	1/3
4	0.1 mfd	400	paper	4	500,000	R.F. Gain
5	10 mmfd		ceramicon	5	5,000	1/3
6	5 mmfd		ceramicon	6	2 megs	1/3
7	.05 mfd	200	paper	7	100,000	1/3
8	.01 mfd	400	paper	8	1 meg	1/3
9	15 mmfd		ceramicon	9	2 megs	1/3
10	5 mmfd		ceramicon	10	40,000	1/3
11	5 mmfd		ceramicon	11	2 megs	1/3
12	.05 mfd	200	paper	12	1 meg	1/3
13	.05 mfd	200	paper	13	100,000	1/3
14	3 mmfd		twisted pair	14	500,000	A.F. Gain
15	2 mmfd		twisted pair	15	10 megs	1/3
16	50 mmfd		mica	16	100,000	1/3
17	.05 mfd	200	paper	17	500,000	1/3
18	.01 mfd	400	paper	18	500,000	1/3
19	.05 mfd	200	paper	19	400,000	1/3
20	.01 mfd	400	paper	20	50,000	1/3
21	50 mmfd		mica	21	50,000	1/3
22	.003 mfd	400	paper	22	300	1/3
23	0.1 mfd	200	paper	23	1100	1/3
24	0.01 mfd	400	paper	24	25	1
25	.005 mfd	400	paper	25	450	line cord
26	.01 mfd	400	paper	26	450	line cord
27	60 mfd	150	electrolytic	27	1100	1/3
28	.02 mfd	200	paper	28	500	1/3
29	.01 mfd	400	paper	29	550	1/3
30	2 mmfd		twisted pair	30	600	1/2
31	100 mmfd		mica	31	9000	1/3
32	500 mmfd		mica	32	900	1/3
33	.05 mfd	200	paper	33	800	1
34	.05 mfd	400	paper	34	800	3
35	60 mfd	150	electrolytic	35	845	3
36	100 mfd	40	electrolytic	36	750	1/3
37	60 mfd	40	electrolytic	37	2000	2
38	60 mfd	150	electrolytic			
39	4230 mmfd		mica			
40	250 mmfd		mica			
41	2030 mmfd		mica			
42	880 mmfd		mica			
43	380 mmfd		mica			
44	.01 mfd	400	paper			
45	.05 mfd	200	paper			

©John F. Rider, Publisher
Courtesy Nostalgia Air