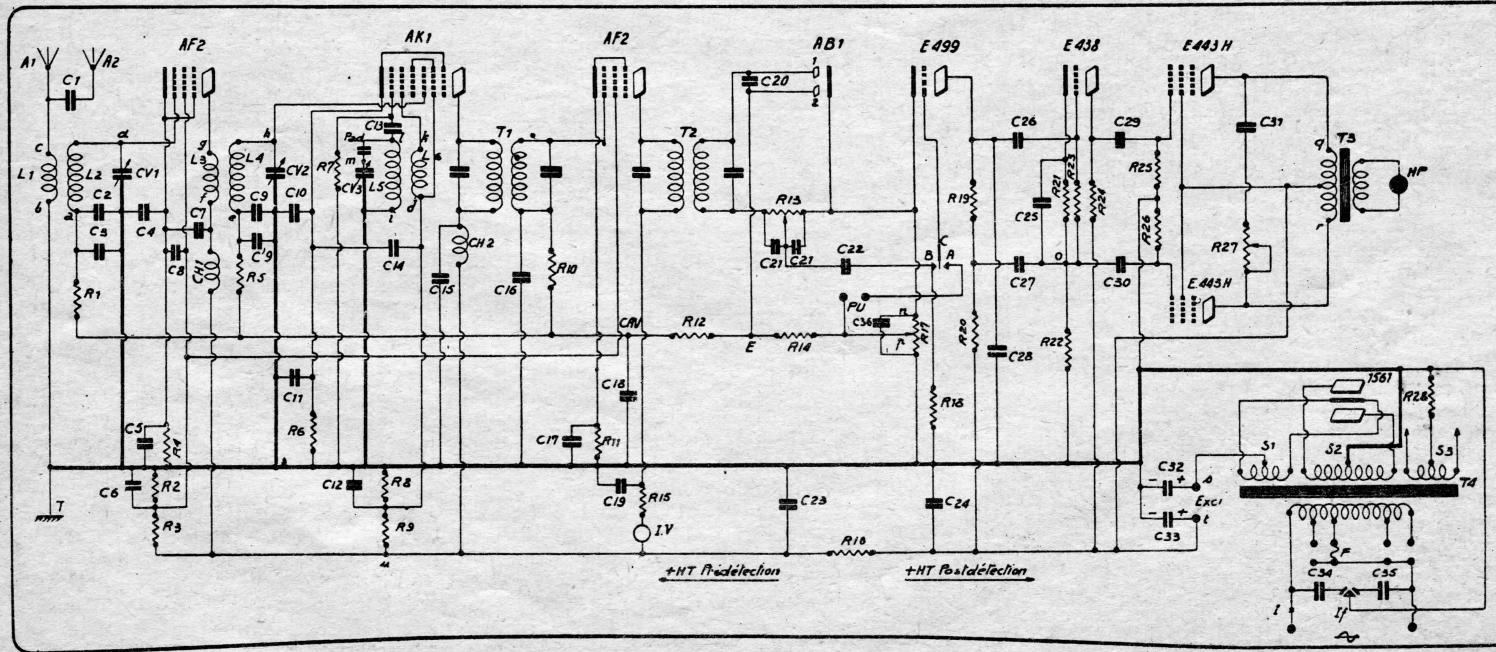
AF2
AK1
AF2
AB1
E499
E438
E443H
E443H
A1
A2
C1
L1
L2
CV1
C2
C3
C4
C8
R1
L3
C7
CH1
L4
CV2
C9
C10
C'9
R5
R7
CV3
L5
C13
Pad
C14
T1
CH2
C15
C16
R10
T2
C20
R13
C21
C21
C22
PU
C36
R17
R12
E
R14
CAV
C18
C17
R11
C19
R15
I.V
C23
R16
C24
R18
R19
R20
C26
C25
C27
C28
R21
R23
R24
R22
C29
C30
R25
R26
R27
C31
T3
HP
C11
R6
C5
R4
C6
R2
R3
C12
R8
R9
T
1561
R28
S1
S2
S3
T4
C32
C33
Exc1
C34
C35
F
I
If
+HT Prédétection
+HT Postdétection

Fig. 1.