RIDER'S
VOLUME - VII

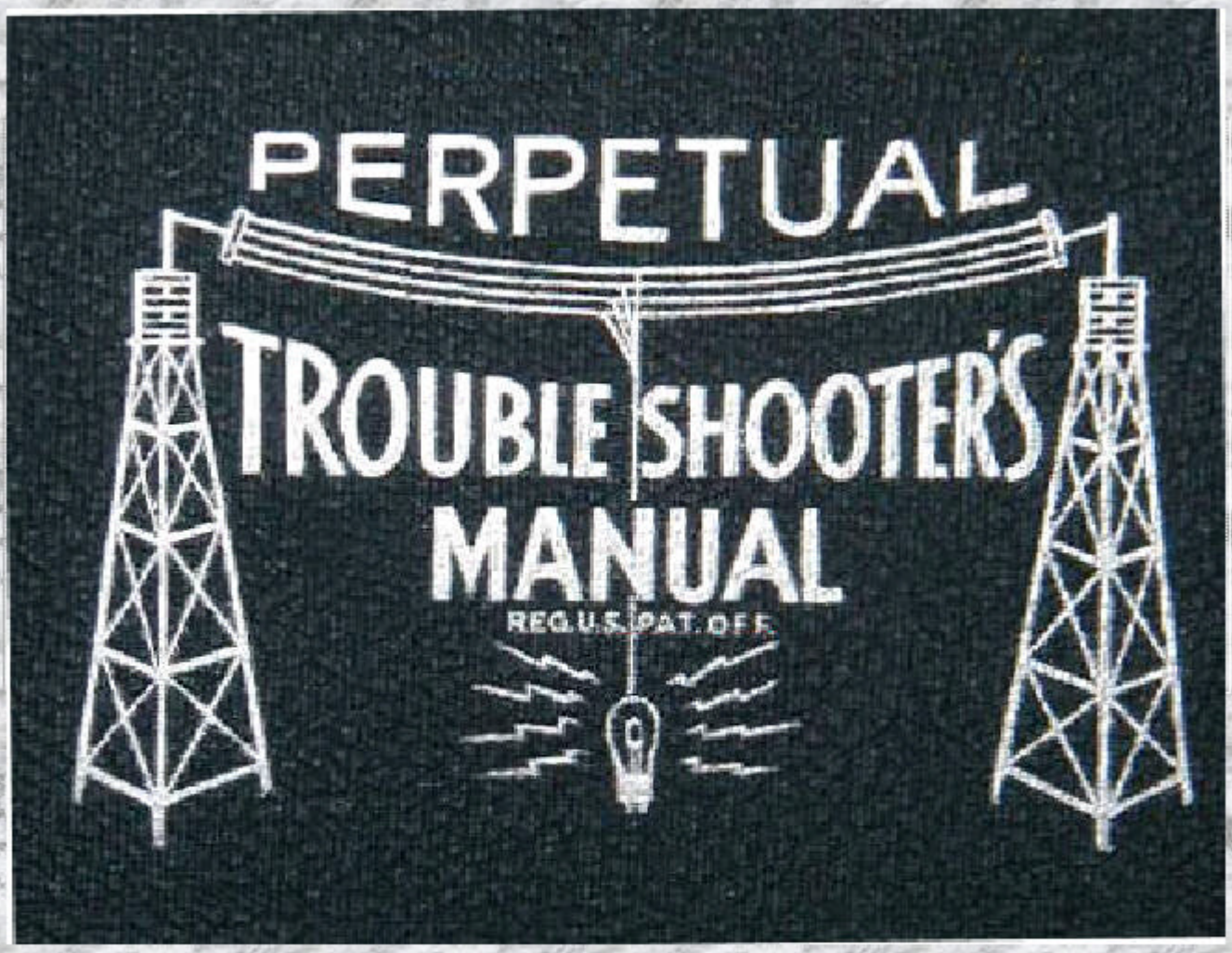

COVERING LATE 1935
THROUGH
LATE 1936

©John F. Rider, Publisher

MODEL 194 P. A. TUNER

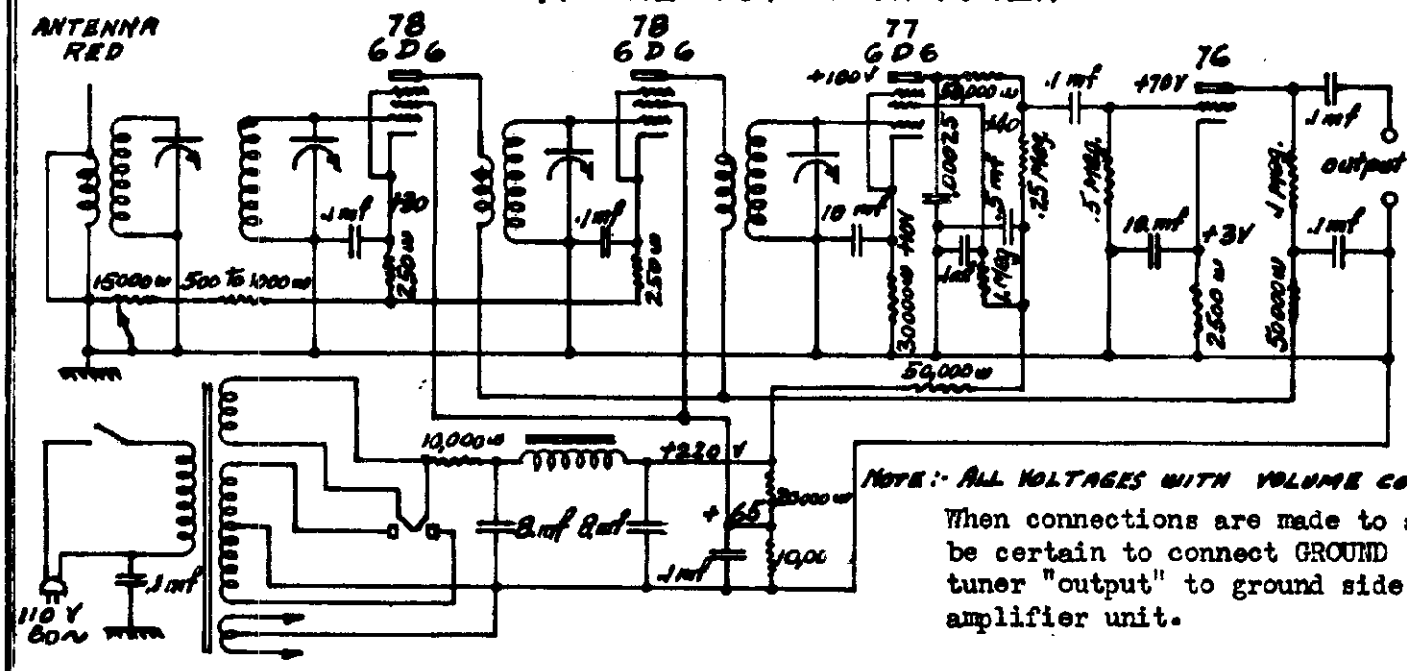

NOTE:- ALL VOLTAGES WITH VOLUME CONTROL FULL ON.

When connections are made to amplifiers, be certain to connect GROUND SIDE of the tuner "output" to ground side of the amplifier unit.

If the tube to line transformer is used, it should be placed a short distance away from the receiver and the proper method of orientation be employed to insure the minimum hum pickup between any power transformers either in the receiver or the amplifier.

If it becomes necessary to readjust the setting of the tuning condenser compensators; follow this procedure:

(1) Place receiver in operating condition.
(2) Connect local oscillator to antenna and ground terminals.
(3) Set tuning dial on receiver to "8" on the dial.
(4) Set oscillator to 1500 K.C.
(5) Adjust all four trimmers for maximum reading on output meter.
(6) Keep power from oscillator at a very low level to assure accurate tuning.
(7) Check at lower frequencies if desired but as the receiver has been designed and the coils and condensers are matched so that "8" on the dial is 1500 K.C., these adjustments should be sufficient for all channels unless the receiver has been damaged.

MODEL 200
MODEL 202
Schematics
Notes

ACRATEST PRODUCTS

MODEL 200 AMPLIFIER

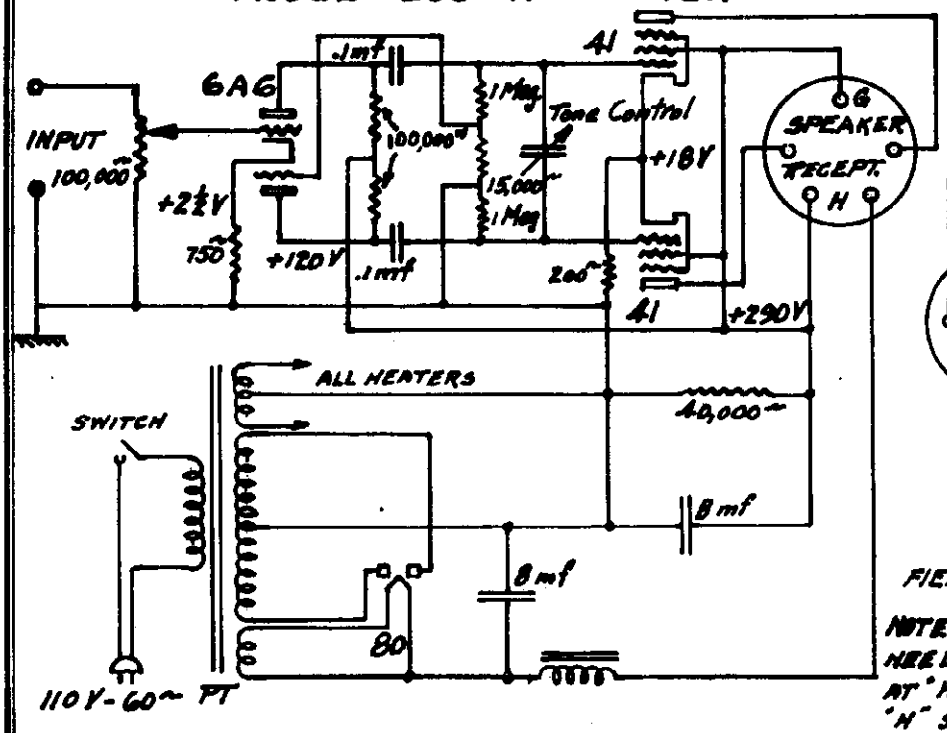

SPEAKER CONNECTIONS

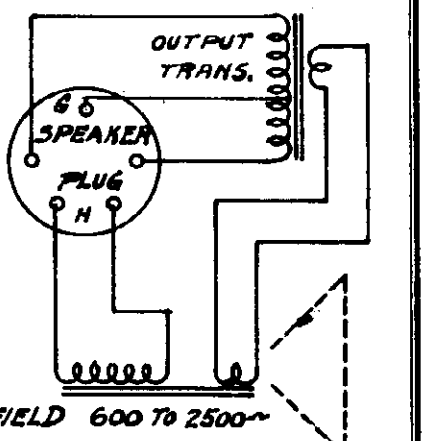

NOTE - IF FIELD SUPPLY IS NOT NEEDED, SHORT TERMINALS AT "H". ALL VOLTAGES WITH "H" SHORTED.

MODEL 202 5METER TRANSCEIVER

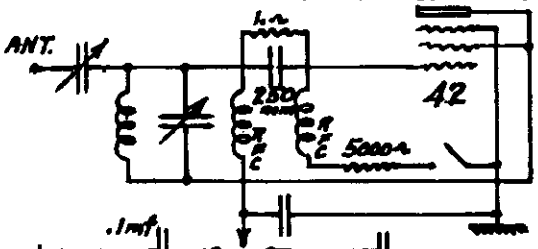

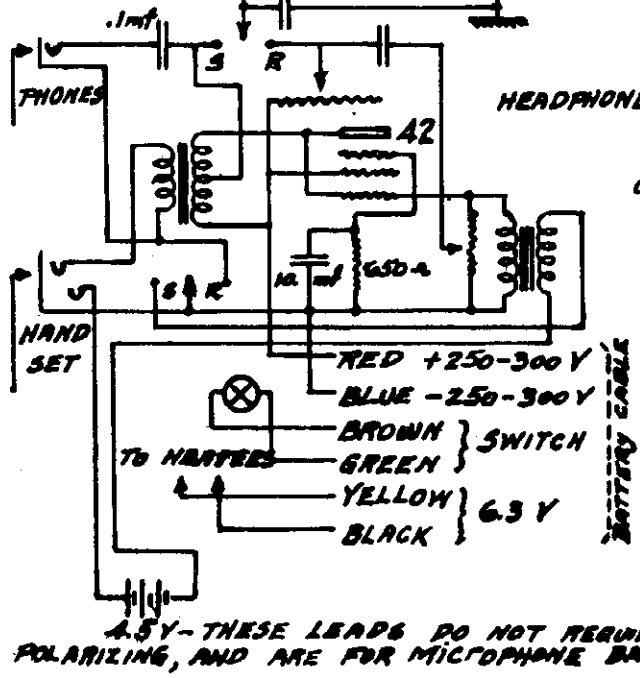

THESE LEADS DO NOT REQUIRE POLARIZING, AND ARE FOR MICROPHONE BAT.

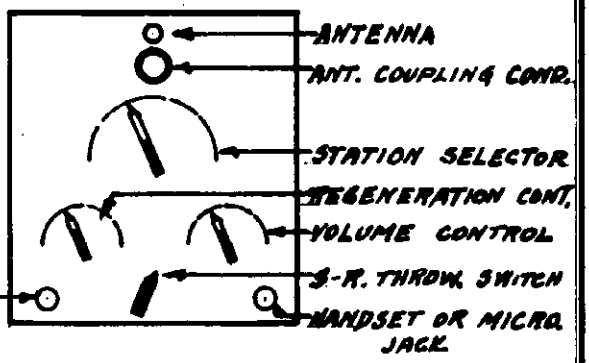

CONNECTING 'FRENCH PHONE' HANDSET

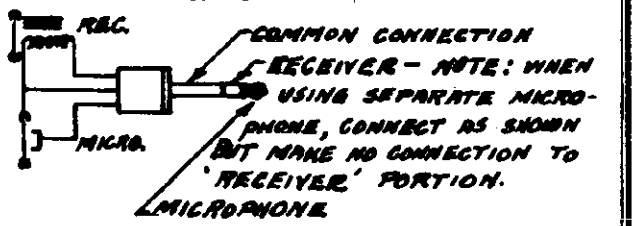

NOTE :- USE HEADPHONES IN 'PHONE' JACK ON TRANSCEIVER.

WITH DRY BATT. OR 6 V. 'B' ELIMINATOR +250 V - RED; -250 V - BLUE. CONNECT BROWN AND BLACK. 6 V. BATTERIES - YELLOW & GREEN. 'B' ELIM. THRU RELAY - YELLOW GND., GREEN THROUGH RELAY TO HOT 'A'. USE SWITCH ON TRANSCEIVER FOR MAIN CONTROL.

©John F. Rider, Publisher

ACRATEST PRODUCTS

MODEL 47
MODEL 85
Schematics
Notes

MODEL 47 AMPLIFIER

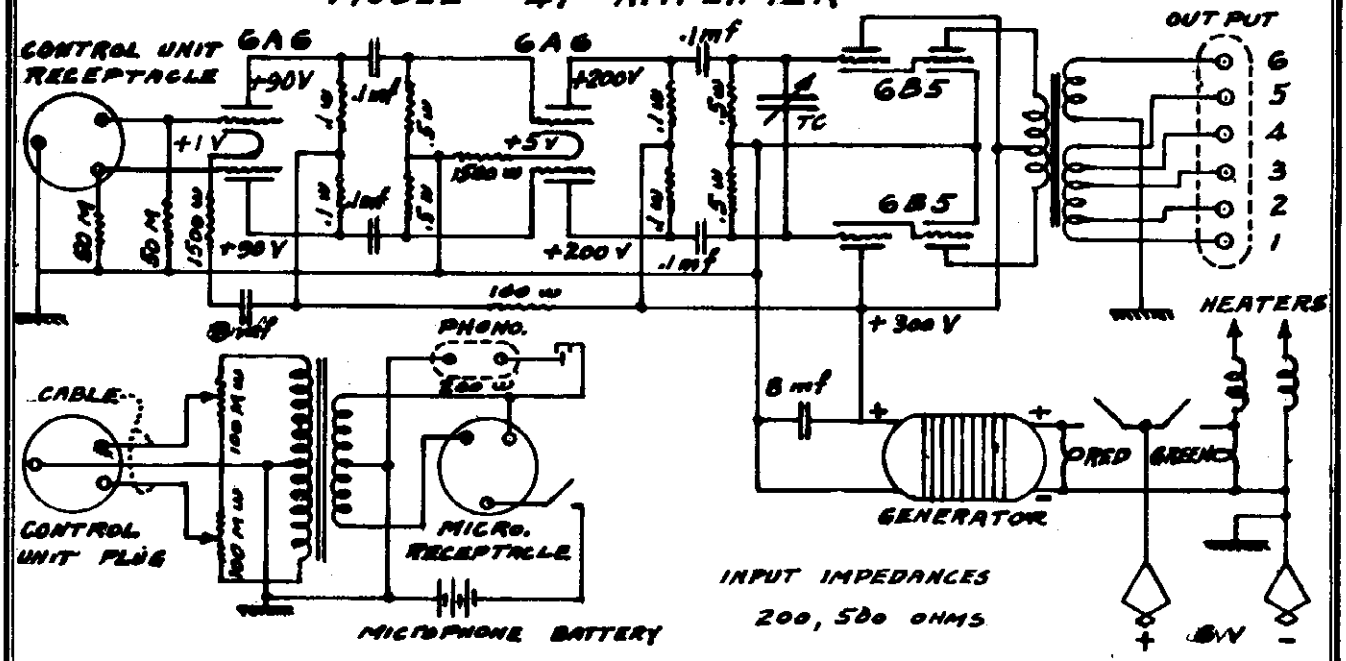

NOTE: Before attempting to use this amplifier, check the polarity of the car storage battery. If car frame or chassis is minus (-) it is safe to operate amplifier as is.

If frame or chassis is positive, remove bottom plate of amplifier look for slate colored wire with tag and change its connection as indicated on tag.

Be sure that the polarity of the generator input is correct. There is a knot in the positive battery feed wire.

The following output impedances are available. Note that terminal No. 1 is grounded to the chassis. The chassis is also B-.

Between Terminals	1	and 2	- 2 ohms
"	"	4	and 5 - 3 ohms
"	"	3	and 4 - 4 ohms
"	"	2	and 3 - 6 ohms
"	"	3	and 5 - 7 ohms
"	"	1	and 3 - 8 ohms
"	"	2	and 4 -10 ohms
"	"	1	and 4 -12 ohms
"	"	2	and 5 -13 ohms
"	"	1	and 5 -15 ohms
"	"	1	and 6 -500 ohms

MODEL 85 EXCITER

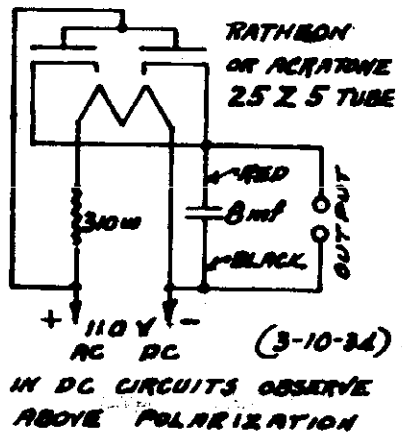

©John F. Rider, Publisher

MODEL 1900
Schematic

ACRATEST PRODUCTS

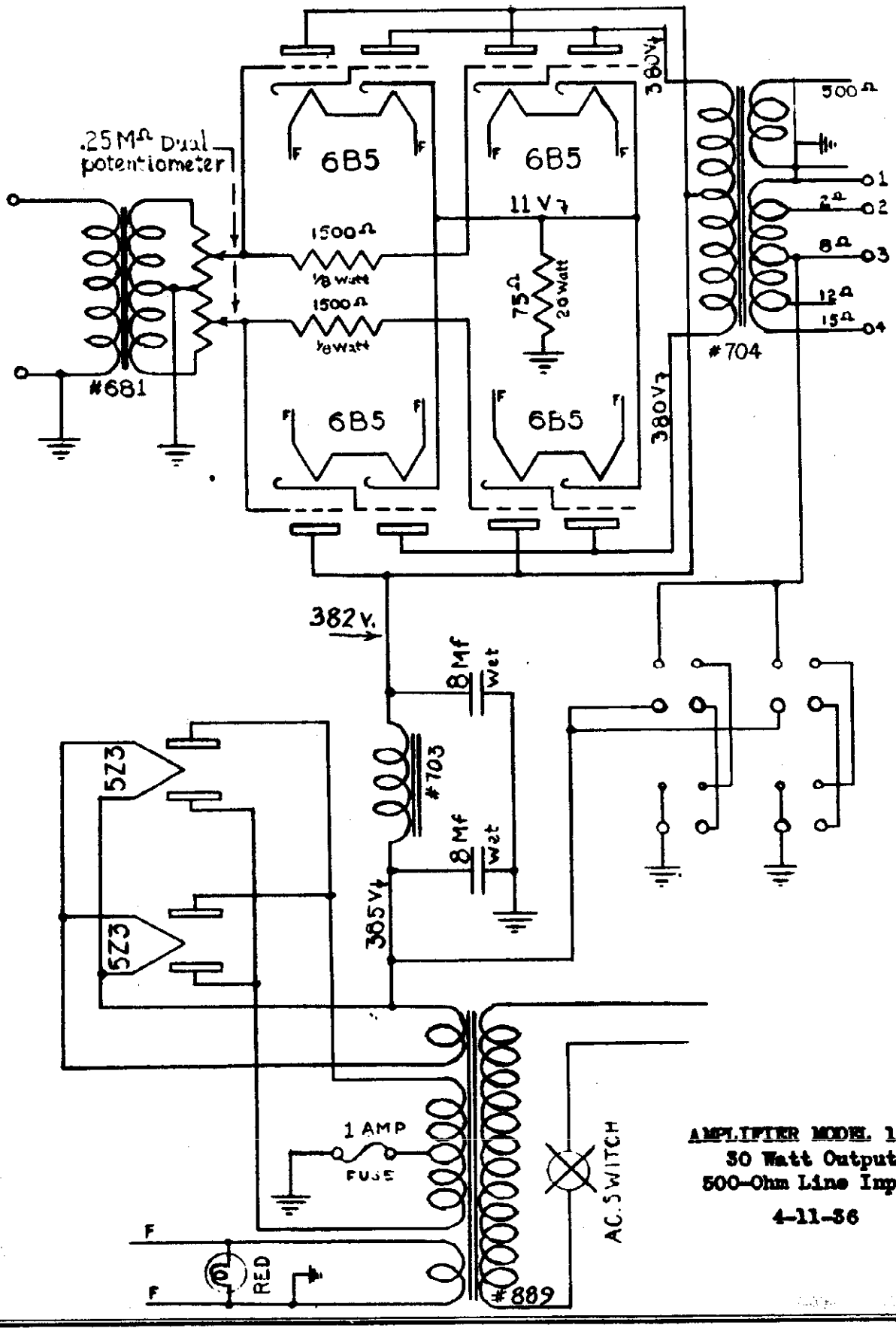

©John F. Rider, Publisher

©John F. Rider, Publisher

MODEL Knave
Schematic
Notes

AIR KING PRODUCTS CORP.

MODEL "KNAVE"

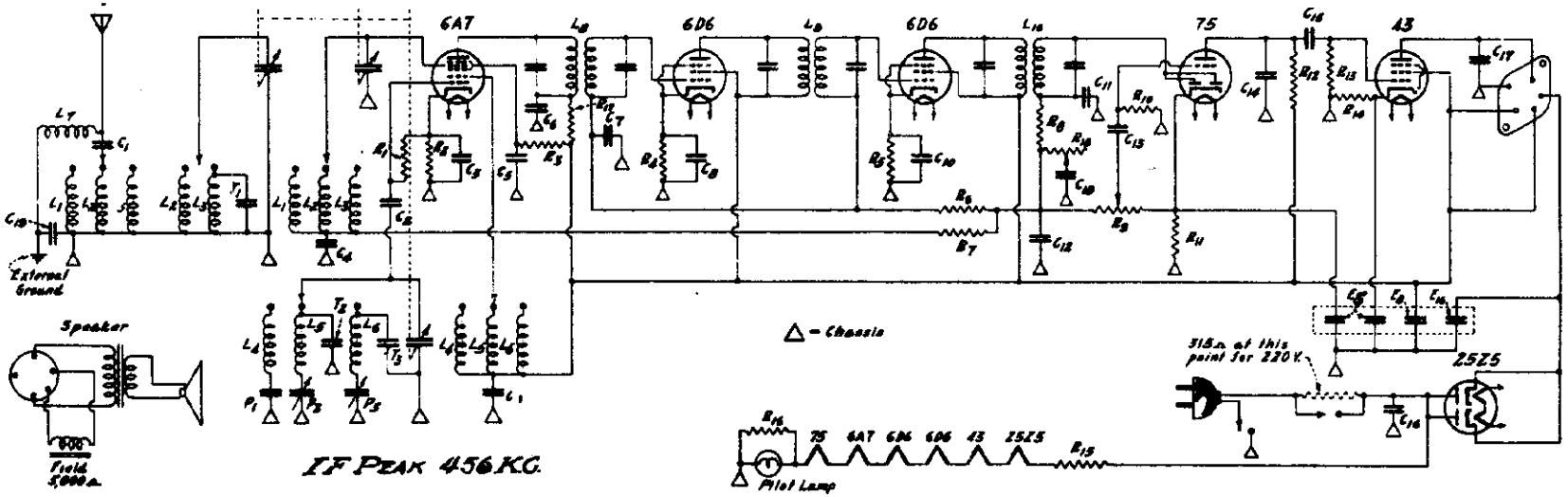

R 1 -	35,000	ohm
R 2 -	300	"
R 3 -	35,000	"
R 4 -	1,100	"
R 5 -	1,100	"
R 6 -	750,000	"
R 7 -	750,000	"
R 8 -	80,000	"
R 9 -	500,000	" vol.cont.
R 10 -	750,000	"
R 11 -	7,500	"
R 12 -	500,000	"
R 13 -	500,000	"
R 14 -	650	"
R 15 -	143	" 30 w.
R 16 -	20	" 2 w.
R 17 -	7,500	"
R 18 -	500,000	" tone cont.

T 1 -	3-30	mmfd.
T 2 -	3-30	mmfd.
T 3 -	10-50	mmfd.

P 1 -	.003	mica
P 2 -	260-500	padder
P 3 -	100-200	padder

C 1 -	.0005	mica
C 2 -	.0001	mica
C 3 -	.1	- 200 v.
C 4 -	.05	- 400 v.
C 5 -	.1	- 200 v.
C 6 -	.1	- 200 v.
C 7 -	.05	- 400 v.
C 8 -	.1	- 200 v.
C 9 -	.1	- 200 v.
C 10 -	.1	- 200 v.
C 11 -	.00025	- mica
C 12 -	.000255	- mica
C 13 -	.02	- 400 v.
C 14 -	.00025	- mica
C 15 -	.02	- 400 v.
C 16 -	.05	- 400 v.
C 17 -	.005	- 400 v.
C 18 -	.005	- 400 v.
C 19 -	.05	- 400 v.

E 5 -	5	mfd. 25 v.
E 8 -	8	mfd. 150 v.
E 16 -	16	mfd. 150 v.

L 1 - S.W. ant.
L 2 - B.C. preselector
L 3 - L.W. preselector
L 4 - S.W. oscillator
L 5 - B.C. oscillator
L 6 - L.C. oscillator
L 7 - 456 K.C. trap
L 8 - input I.F.
L 9 - int. I.F.
L 10 - output I.F.

INSTRUCTIONS MODEL "KNAVE" AC-DC SUPERHETERODYNE RECEIVER

ANTENNA AND GROUND CONNECTIONS. An antenna from 50 to 100 feet long is recommended. A good ground wire is absolutely essential on this receiver.

POWER SUPPLY. This receiver is designed to operate from the 110-125 v. lines normally, or 215-240 v. AC or DC lines if the receiver has a change over connector on back of chassis.

LOCATION OF CONTROLS. The knob on the lower left is the tone control, the knob on the lower right is the volume control and on-off switch, and the knob directly below the selector knob is the band switch.

OPERATION. To receive stations from 140 to 350 kilocycles, turn wave band switch to the extreme right position and turn set on by rotating volume control knob to the right. Turn station selector knob to secure desired stations. When tuning in a station, set tuning control carefully to maximum station volume, then adjust volume to desired level with volume control knob. For stations from 1700 to 540 kilocycles, turn band switch knob to center position, and for stations between 15 and 52 meters turn switch to extreme left position.

©John F. Rider, Publisher

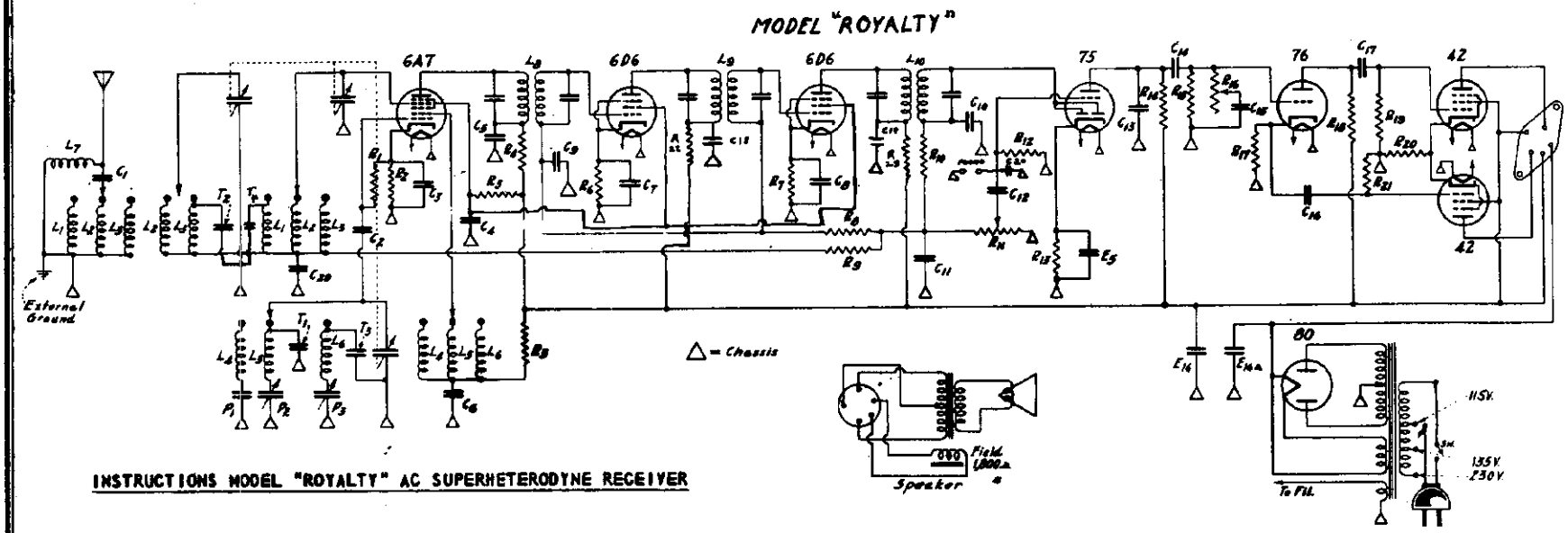

INSTRUCTIONS MODEL "ROYALTY" AC SUPERHETERODYNE RECEIVER

ANTENNA AND GROUND CONNECTIONS. An antenna from 50 to 100 feet long is recommended. A good ground wire is absolutely essential on this receiver.

POWER SUPPLY. This receiver is designed to operate from the 115-135 or 220 A.C. 50 cycle lines. The voltage change is accomplished by removing the cover from the power transformer and connecting the flexible lead to the desired voltage terminal.

LOCATION OF CONTROLS. The knob on the lower left is the on-off switch and volume control. The knob on the lower right is the band switch and the knob directly below the selector knob is the tone control.

OPERATION. To receive stations from 140 to 350 kilocycles, turn wave band switch to the extreme right position and turn set on by rotating volume control knob to the right. Turn station selector knob to secure desired stations. When tuning in a station, set tuning control carefully to maximum station volume, then adjust volume to desired level with volume control knob. For stations from 1700 to 540 kilocycles, turn band switch knob to center position, and for stations between 15 and 52 meters turn switch to extreme left position.

L 1 - S.W. ant.
L 2 - B.C. preselector
L 3 - L.W. preselector
L 4 - S.W. oscillator
L 5 - B.C. oscillator
L 6 - L.C. oscillator
L 7 - 456 K.C. trap
L 8 - input I.F. 456 K.C.
L 9 - int. I.F. 456 K.C.
L 10 - output I.F. 456 K.C.

R 1 -	35,000	ohm
R 2 -	300	"
R 3 -	40,000	"
R 4 -	7,500	"
R 5 -	20,000	"
R 6 -	1,100	"
R 7 -	1,100	"
R 8 -	750,000	"
R 9 -	750,000	"
R 10 -	60,000	"
R 11 -	500,000	vol. cont.
R 12 -	1,000,000	ohm
R 13 -	4,500	"
R 14 -	500,000	"
R 15 -	300,000	"
R 16 -	500,000	tone cont.
R 17 -	60,000	ohm
R 18 -	60,000	"
R 19 -	500,000	"
R 20 -	310	"
R 21 -	500,000	"
R 22 -	7,500	"
R 23 -	7,500	"

T 1 -	3-30 mmfd.
T 2 -	3-30 mmfd.
T 3 -	10-50 mmfd.
T 4 -	3-30 mmfd.
E 5 -	5 mfd. 25 v.
E 16 -	16 mfd. 350 v.
E 16A-	16 mfd. 450 v.

IF PEAK 456 KC.

P 1 -	.004	mica
P 2 -	260-500	padder
P 3 -	100-200	padder

C 1 -	.0005	mica	
C 2 -	.0001	mica	
C 3 -	.1	-	200 v.
C 4 -	.25	-	200 v.
C 5 -	.05	-	400 v.
C 6 -	.05	-	400 v.
C 7 -	.1	-	200 v.
C 8 -	.1	-	200 v.
C 9 -	.02	-	400 v.
C 10 -	.00025	-	mica
C 11 -	.00025	-	mica
C 12 -	.02	-	400 v.
C 13 -	.00025	-	mica
C 14 -	.02	-	400 v.
C 15 -	.005	-	400 v.
C 16 -	.02	-	400 v.
C 17 -	.02	-	400 v.
C 18 -	.05	-	400 v.
C 19 -	.05	-	400 v.
C 20 -	.0001	-	mica

AIR KING PRODUCTS CORP.

MODELS 213, King
Schematic, Notes

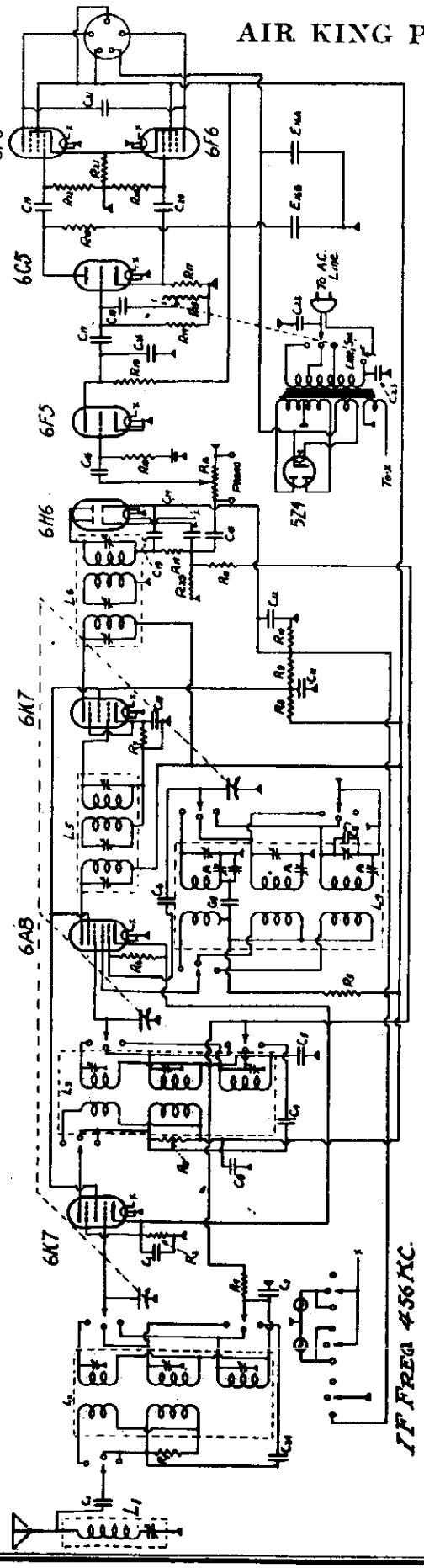

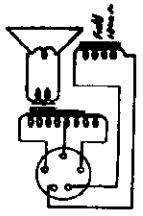

R 1 -	10,000 ohms -	1/4 w.
R 2 -	200 " -	" "
R 3 -	25,000 " -	1/2 w.
R 4 -	300,000 " -	1/4 w.
R 5 -	50,000 " -	1 w.
R 6 -	400,000 " -	1/4 w.
R 7 -	10,000 " -	2 w.
R 8 -	15,000 " -	2 w.
R 9 -	650 " -	1/4 w.
R 10 -	1,000,000 " -	" "
R 11 -	1,000,000 " -	tone cont.
R 12 -	1,000,000 " -	vol. cont.
R 13 -	800,000 " -	1/4 w.
R 14 -	800,000 " -	" "
R 15 -	500,000 " -	" "
R 16 -	60,000 " -	1 w.
R 17 -	60,000 " -	" "
R 18 -	60,000 " -	" "
R 19 -	60,000 " -	" "
R 20 -	500,000 " -	" "
R 21 -	310 " -	2 w.
R 22 -	500,000 " -	1/4 w.
R 23 -	500,000 " -	" "

C 1 -	.003	* 600 v.
C 2 -	.1	* 600 v.
C 3 -	.05	* 400 v.
C 4 -	.0005	* mica
C 5 -	.05	* 400 v.
C 6 -	.000065	* mica
C 7 -	.05	* 400 v.
C 8 -	.00002	* mica
C 9 -	.02	* 400 v.
C 10 -	.1	* 200 v.
C 11 -	.1	* 200 v.
C 12 -	.1	* 200 v.
C 13 -	.0001	* mica
C 14 -	.0001	* mica
C 15 -	.02	* 400 v.
C 16 -	.02	* 400 v.
C 17 -	.02	* 400 v.
C 18 -	.006	* 400 v.
C 19 -	.02	* 400 v.
C 20 -	.02	* 400 v.
C 21 -	.0025	* 400 v.
C 22 -	.05	* 400 v.
C 23 -	.05	* 400 v.
C 24 -	.0006	* mica
C 25 -	.02	* 400 v.
C 26 -	.0001	* mica

P 1 -	.005 mfd.
P 2 -	.0008 mfd.
P 3 -	.00015 mfd.

R 24 -	15 mfd. - 450 v.
R 25 -	15 mfd. - 350 v.

INSTRUCTIONS FOR MODEL 213 ST AC 3 BAND SUPERHETERODYNE RECEIVER

ANTENNA AND GROUND CONNECTIONS. An antenna from 50 to 100 feet long is recommended. A good ground wire is absolutely essential on this receiver.

POWER SUPPLY. This receiver is designed to operate from the 110-125 or 220 A.C. cycle lines. The voltage change is accomplished by removing the cover from the power transformer and connecting the flexible lead to the desired voltage terminal.

ADJUSTMENT OF CONTROLS. The knob on the extreme left is the on-off switch and tone control. The knob on the extreme right is the interchannel noise suppressor switch. The other lower knobs are wave change switch and volume control.

OPERATION. Turn station selector knob to secure desired station. When tuning in a station, set tuning control carefully to maximum station volume, then adjust volume to desired level with volume control knob. When the knob on extreme right is turned clockwise, the noise suppressor functions. This control is only effective on high wave stations.

©John F. Rider, Publisher

MODEL Dynamic 2-Range
MODEL Magnetic,10,21
22,41,42
Schematics

AIR KING PRODUCTS CORP.

MODEL DYNAMIC 2 RANGE

AC-DC TRF RECEIVER 80-560 MTRS

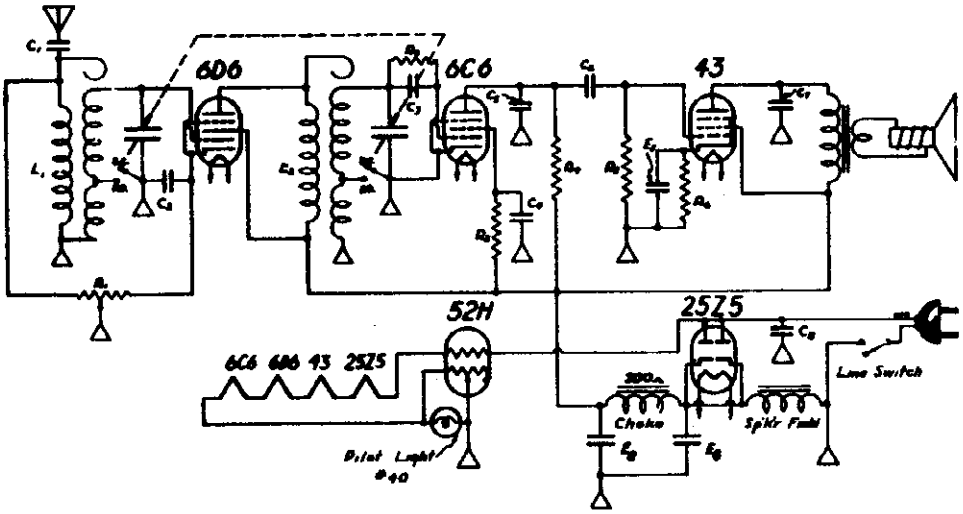

R1 - 25,000 ohm volume control
R2 - 3,000,000 " 1/4 watt
R3 - 6,000,000 " 1/4 "
R4 - 1,000,000 " 1/4 "
R5 - 750,000 " 1/4 "
R6 - 600 " 1 "

C1 - .006 - 400 V.
C2 - .1 - 600 V.
C3 - .005 - 400 V.
C4 - .1 - 600 V.
C5 - .0001 - Silk
C6 - .05 - 400 V.
C7 - .008 - 400 V.
C8 - .05 - 400 V.

R8 - 8 mfd. - 25 V.
R9 - 8 mfd. -150 V.
R10 - 8 mfd. -150 V.

L1 - Combination - Ant. Coil
L2 - Combination - R.F. Coil

MODEL MAGNETIC NUMBERS 10, 21, 22, 41, 42

AC-DC TRF RECEIVER

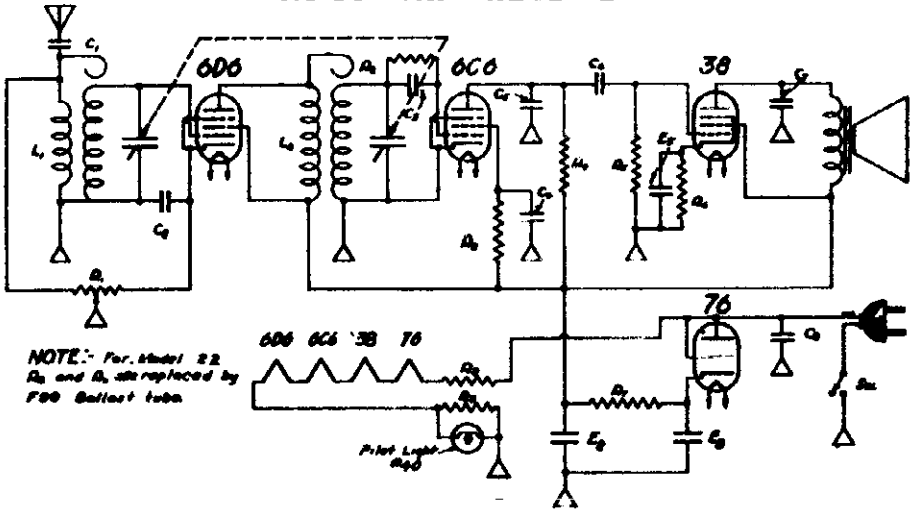

R1 - 25,000 ohm vol. cont.
R2 - 3,000,000 " ½ watt.
R3 - 6,000,000 " ½ watt.
R4 - 1,000,000 " ½ "
R5 - 750,000 " ½ "
R6 - 1,000 " ½ "
R7 - 300 " 1 "
R8 - 375 " 2m 125m cont
R9 - 30 " 6 watt

R8 - 8 mfd. - 25V.
R9 - 8 mfd. - 150 V.
R10 - 8 mfd. - 150 V.

L1 - Antenna Coil.
L2 - R. F. Coil

C1 - .006 - 400 V.
C2 - .1 - 600 V.
C3 - .005 - 400 V.
C4 - .1 - 600 V.
C5 - .0001 - mica
C6 - .05 - 400 V
C7 - .004 - 400 V
C8 - .05 - 400 V

©John F. Rider, Publisher

AIR KING PRODUCTS CORP.

MODELS 227,228,229
Premier, Palace, Pirate
Schematic

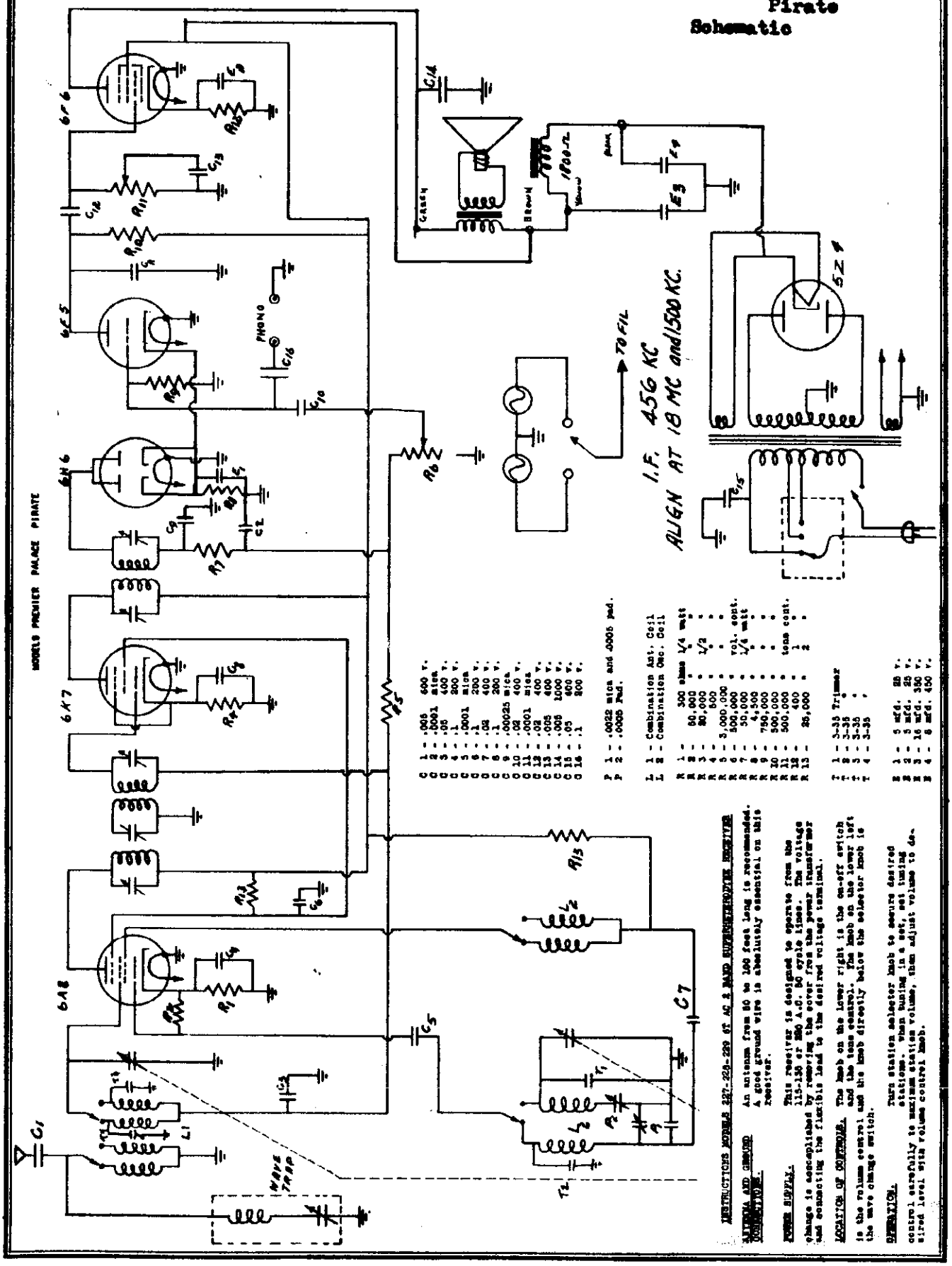

©John F. Rider, Publisher

MODELS 209, Prince
Schematic
Notes

AIR KING PRODUCTS CORP.

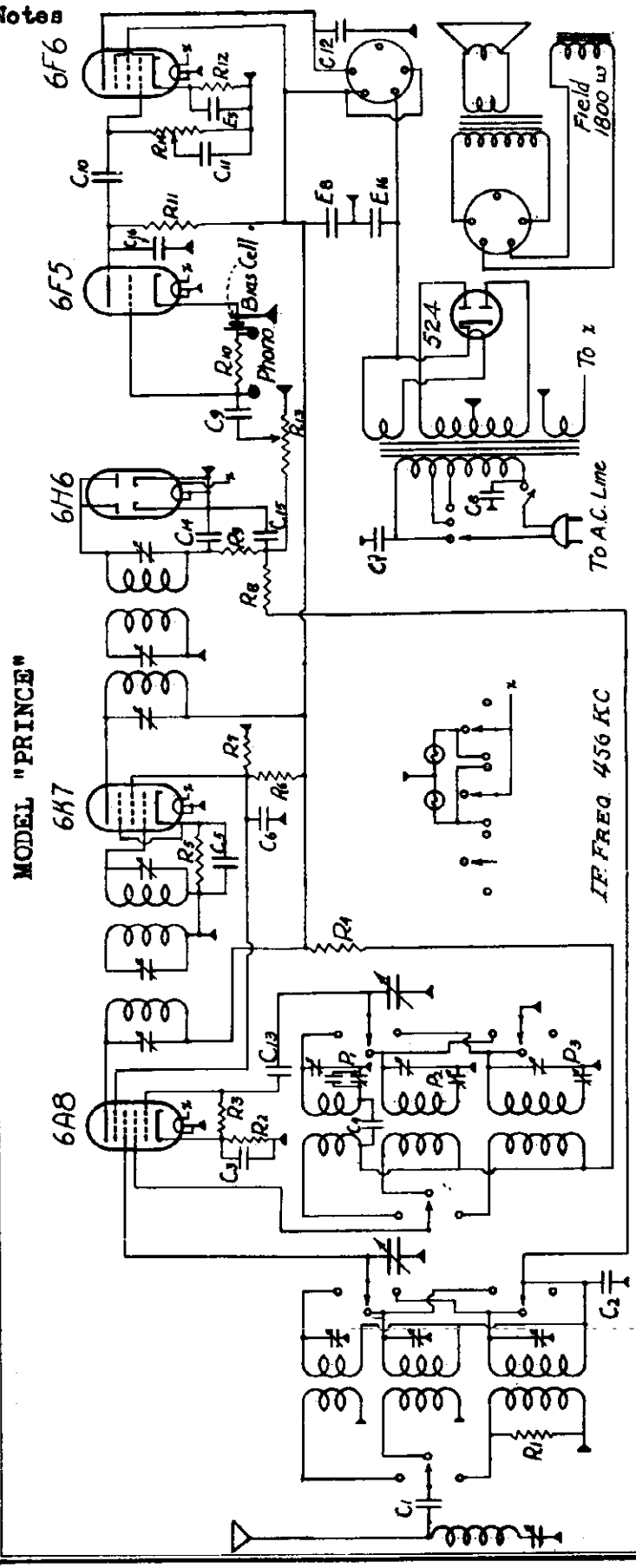

INSTRUCTIONS MODEL 209 6T AC 3 BAND SUPERHETERODYNE RECEIVER

ANTENNA AND GROUND CONNECTIONS. An antenna from 50 to 100 feet long is recommended. A good ground wire is absolutely essential on this receiver.

POWER SUPPLY. This receiver is designed to operate from the 115-135 or 220 A.C. 50 cycle lines. The voltage change is accomplished by removing the cover from the power transformer and connecting the flexible lead to the desired voltage terminal.

LOCATION OF CONTROLS. The knob on the lower right is the on-off switch and the tone control. The knob on the lower left is the volume control and the knob directly below the selector knob is the wave change switch.

OPERATION. Turn station selector knob to secure desired stations. When tuning in a set, set tuning control carefully to maximum station volume, then adjust volume to desired level with volume control knob.

R 1 -	15,000 ohms	- 1/4 w.	C 1 - .005	- 600 v.	
R 2 -	300	" - "	C 2 - .05	- 400 v.	
R 3 -	50,000	" - "	C 3 - .1	- 200 v.	
R 4 -	20,000	" - 1/2 w.	C 4 - .02	- 400 v.	
R 5 -	400	" - 1/4 w.	C 5 - .1	- 200 v.	
R 6 -	25,000	" - 2 w.	C 6 - .1	- 200 v.	
R 7 -	40,000	" - 1/2 w.	C 7 - .05	- 400 v.	
R 8 -	1,000,000	" - 1/4 w.	C 8 - .05	- 400 v.	
R 9 -	60,000	" - "	C 9 - .02	- 400 v.	
R 10 -	1,000,000	" - "	C 10 - .02	- 400 v.	
R 11 -	500,000	" - "	C 11 - .005	- 600 v.	
R 12 -	400	" - 1 w.	C 12 - .005	- 600 v.	
R 13 -	500,000	" - vol. cont.	C 13 - .000085	- mica	
R 14 -	500,000	" - tone cont.	C 14 - .0001	- mica	
			C 15 - .0001	- mica	
			C 16 - .0001	- mica	
P 1 -	.0027 max.				
P 2 -	.0005 max.				
P 3 -	.00015 max.				
			E 5 - 5 mfd.	- 35 v.	
			E 8 - 8 mfd.	- 400 v.	
			E 16 - 16 mfd.	- 450 v.	

©John F. Rider, Publisher

AIR KING PRODUCTS CORP. **MODELS 211,224,225, Lancer, Spear, Armor Superhet Schematic, Notes**

MODELS LANCER,

SPEAR, AND ARMOR.

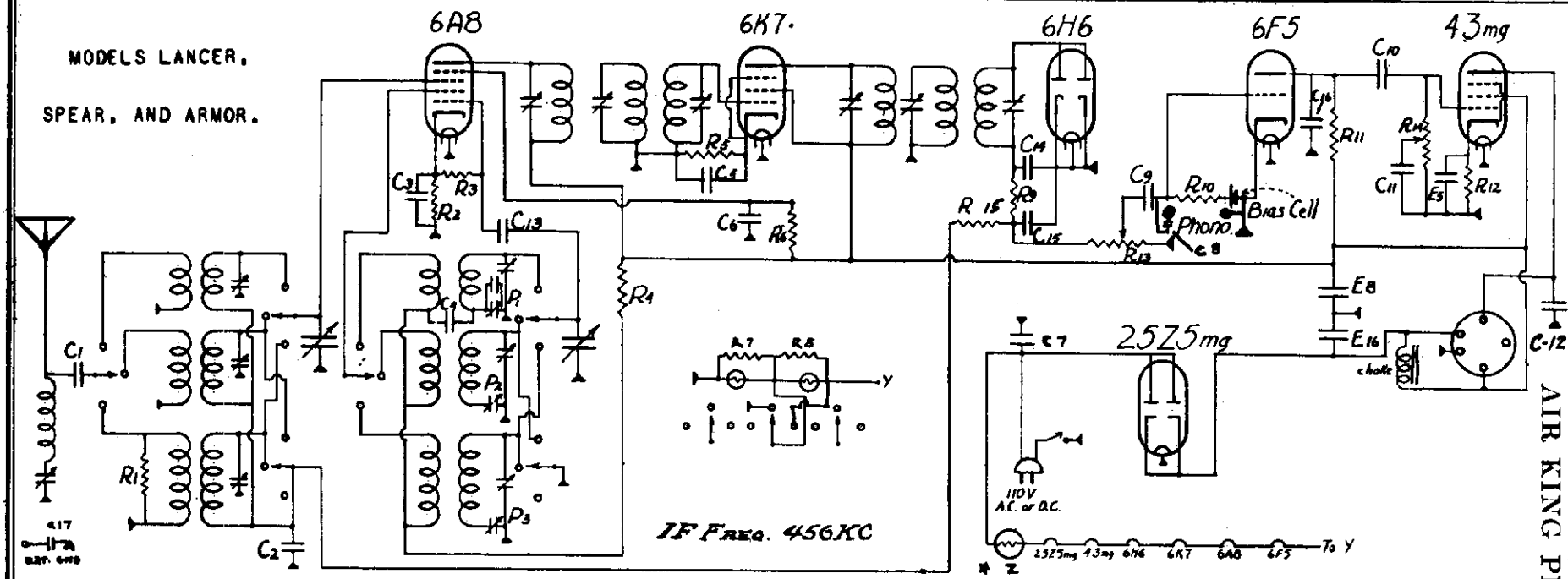

INSTRUCTIONS MODELS 211, 224, 225 6T AC/DC 3 BAND 456 K.C. SUPERHETERODYNE

ANTENNA AND GROUND CONNECTIONS. An antenna from 50 to 100 feet long is recommended. A good ground wire is absolutely essential on this receiver.

POWER SUPPLY. This receiver is designed to operate from A.C. or D.C. lines. On A.C. it will operate on the 50 or 60 cycle lines, but 25 cycle operation can be provided for by the addition of one 16 mfd. electrolytic in parallel with E8.

LOCATION OF CONTROLS. The knob on the lower right is the on-off switch and the tone control. The knob on the lower left is the volume control and the knob directly below the selector knob is the wave change switch.

OPERATION. Turn station selector knob to secure desired stations. When tuning in the set, set tuning control carefully to maximum station volume, then adjust volume to desired level with volume control knob.

R 1 -	15,000	ohms	- 1/4 w.	R 8 -	25	"	- "
R 2 -	200	"	- "	R 9 -	60,000	"	- 1/4 w.
R 3 -	50,000	"	- "	R 10 -	1,000,000	"	- "
R 4 -	1,000	"	- "	R 11 -	500,000	"	- "
R 5 -	400	"	- "	R 12 -	650	"	- 1 w.
R 6 -	25,000	"	- "	R 13 -	500,000	"	- vol. cont.
R 7 -	25	"	- 2 w.	R 14 -	500,000	"	- tone cont.
				R 15 -	1,000,000	"	- 1/4 w.

C 1 -	.005	- 600 v.	
C 2 -	.05	- 400 v.	
C 3 -	.1	- 200 v.	
C 4 -	.02	- 400 v.	
C 5 -	.1	- 200 v.	
C 6 -	.1	- 200 v.	
C 7 -	.05	- 400 v.	
C 8 -	.1	- 200 v.	
C 9 -	.02	- 400 v.	
C 10 -	.02	- 400 v.	
C 11 -	.005	- 600 v.	
C 12 -	.005	- 600 v.	
C 13 -	.000085	- mica	
C 14 -	.0001	- mica	
C 15 -	.0001	- mica	
C 16 -	.0001	- mica	
C 17 -	.05	- 400 v.	

P 1 -	.0027 max.
P 2 -	.0005 max.
P 3 -	.00015 max.

E 5 -	10	mfd.	- 35 v.
E 8 -	12	mfd.	- 400 v.
E 16 -	24	mfd.	- 450 v.

* Resistor marked "Z" is either ballast tube or 160 ohm resistor cord.

MODELS 27,28A
MODELS 47,48,57,58
Schematics

AIR KING PRODUCTS CORP.

MODELS 27,28A

2 RANGE 75-560 METER SUPERHETERODYNE

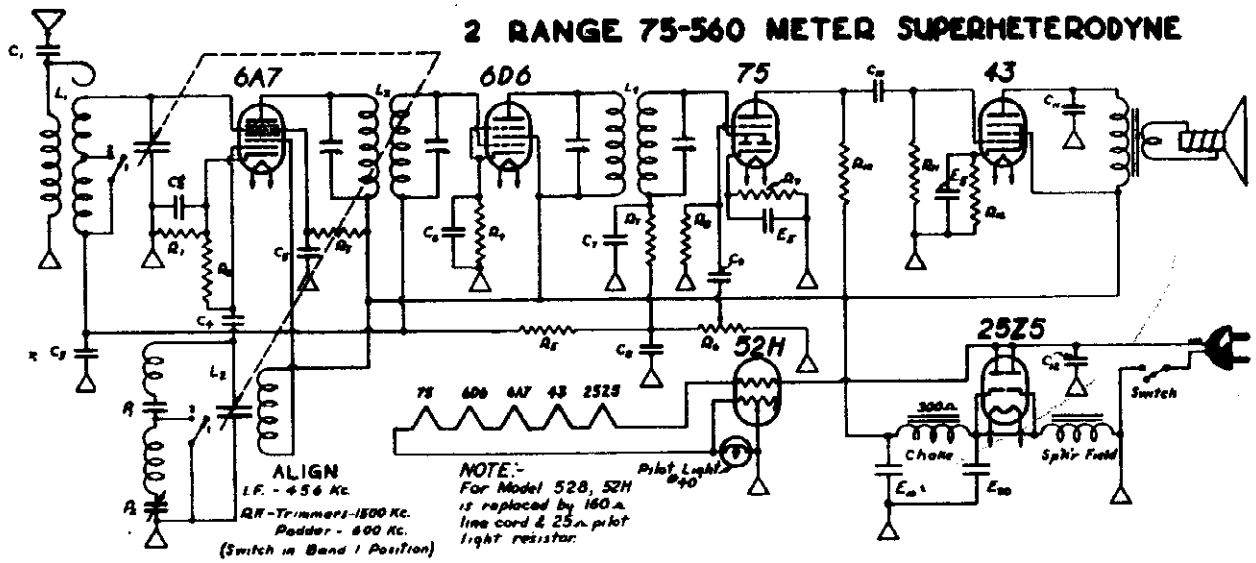

R 1 - 250 ohm ½ watt.
R 2 - 50,000 " ½ watt.
R 3 - 50,000 " ½ watt.
R 4 - 800 " ½ watt.
R 5 -3,000,000 " ½ watt.
R 6 - 500,000 " Vol.control.
R 7 - 50,000 " ½ watt.
R 8 - 750,000 " ½ watt.
R 9 - 4,800 " ½ watt.
R 10 - 800,000 " ½ watt.
R 11 - 750,000 " ½ watt.
R 12 - 400 " 1 watt.

L 1 - Comb. Police Band & B'dc't Ant. Coil.
L 2 - Comb. Police Band & B'dc't Osc. Coil.
L 3 - 456 K.C. I.F.
L 4 - 456 KC. I.F.

F 1 - .006 mica
F 2 - 500 mmf. mmx.

E 20 - 20 mfd.- 150 V.
E 10 - 10 mfd. -150 V.
E 8 - 8 mfd. -25 V.
E 8 - 8 mfd. -25 V.

C 1 - .006 - 600 V.
C 2 - .1 - 200 V.
C 3 - .05 - 400 V.
C 4 - .0005- mica.
C 5 - .1 - 200 V.
C 6 - .1 - 200 V.

C 7 - .0001- mica
C 8 - .0001- mica
C 9 - .05 - 400 V.
C 10 - .05 - 400 V.
C 11 - .006 - 400 V.
C 12 - .05 - 400 V.

MODELS 47,48,57,58

2 RANGE 75-560 METER SUPERHETERODYNE

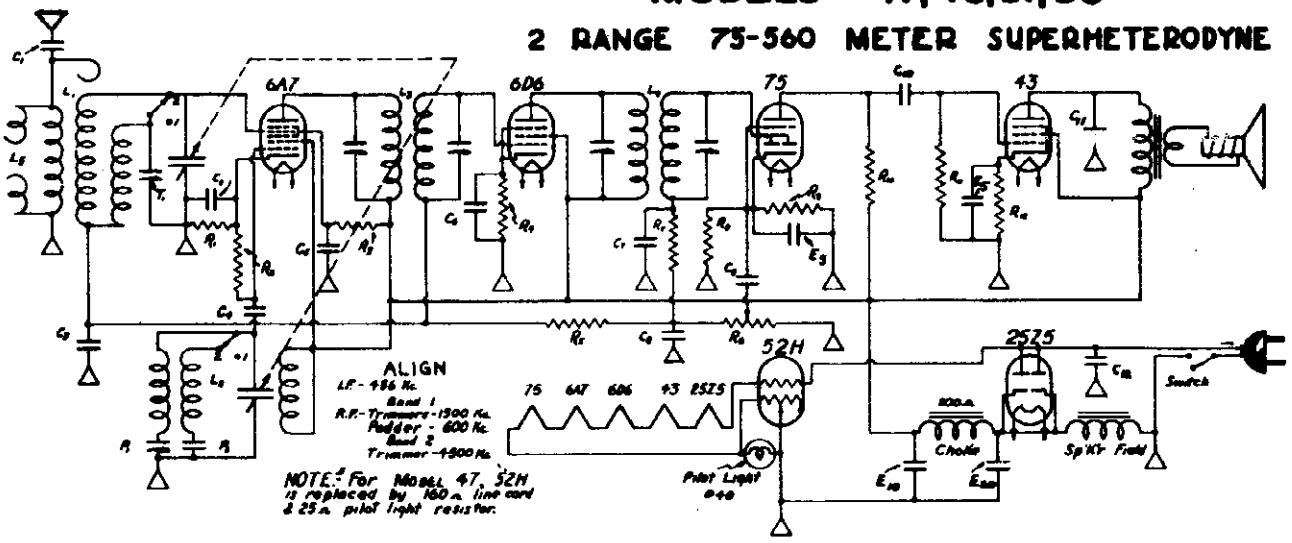

R 1 - 300 ohm ½ watt
R 2 - 50,000 " ½ watt
R 3 - 50,000 " ½ watt
R 4 - 700 " ½ watt
R 5 - 3,000,000 " ½ watt
R 6 - 500,000 " Vol. Control.
R 7 - 50,000 " ½ watt
R 8 - 750,000 " ½ watt
R 9 - 4,800 " ½ watt
R 10 - 800,000 " ½ watt
R 11 - 750,000 " ½ watt
R 12 - 400 " 1 watt

L 1 - Comb. Police Band & B'dc't Ant. Coil.
L 2 - Comb. Police Band & B'dc't Osc. Coil.
L 3 - 456 KC I. F.
L 4 - 456 KC I. F.
L 5 - 600 KC Wave Trap.
T 1 - 2-25 mmf. trimmer.

F 1 - 500 mmf. mmx.
F 2 - .0006 mfd.

E 20 - 20 mfd. 150 V.
E 10 - 10 mfd. 150 V.
E 8 - 8 mfd. 25 V.
E 8 - 8 mfd. 25 V.

C 1 - .006 - 600 V
C 2 - .05 - 400 V.
C 3 - .05 - 400 V.
C 4 - .0001- mica
C 5 - .1 - 200 V.
C 6 - .1 - 200 V.
C 7 - .0001- mica
C 8 - .0001- mica
C 9 - .05 - 400 V.
C 10 - .05 - 400 V.
C 11 - .006 - 400 V.
C 12 - .05 - 400 V.

©John F. Rider, Publisher

AIR KING PRODUCTS CORP.

MODELS 221,222,223
Regent,Autocrat
Council
Schematic, Notes

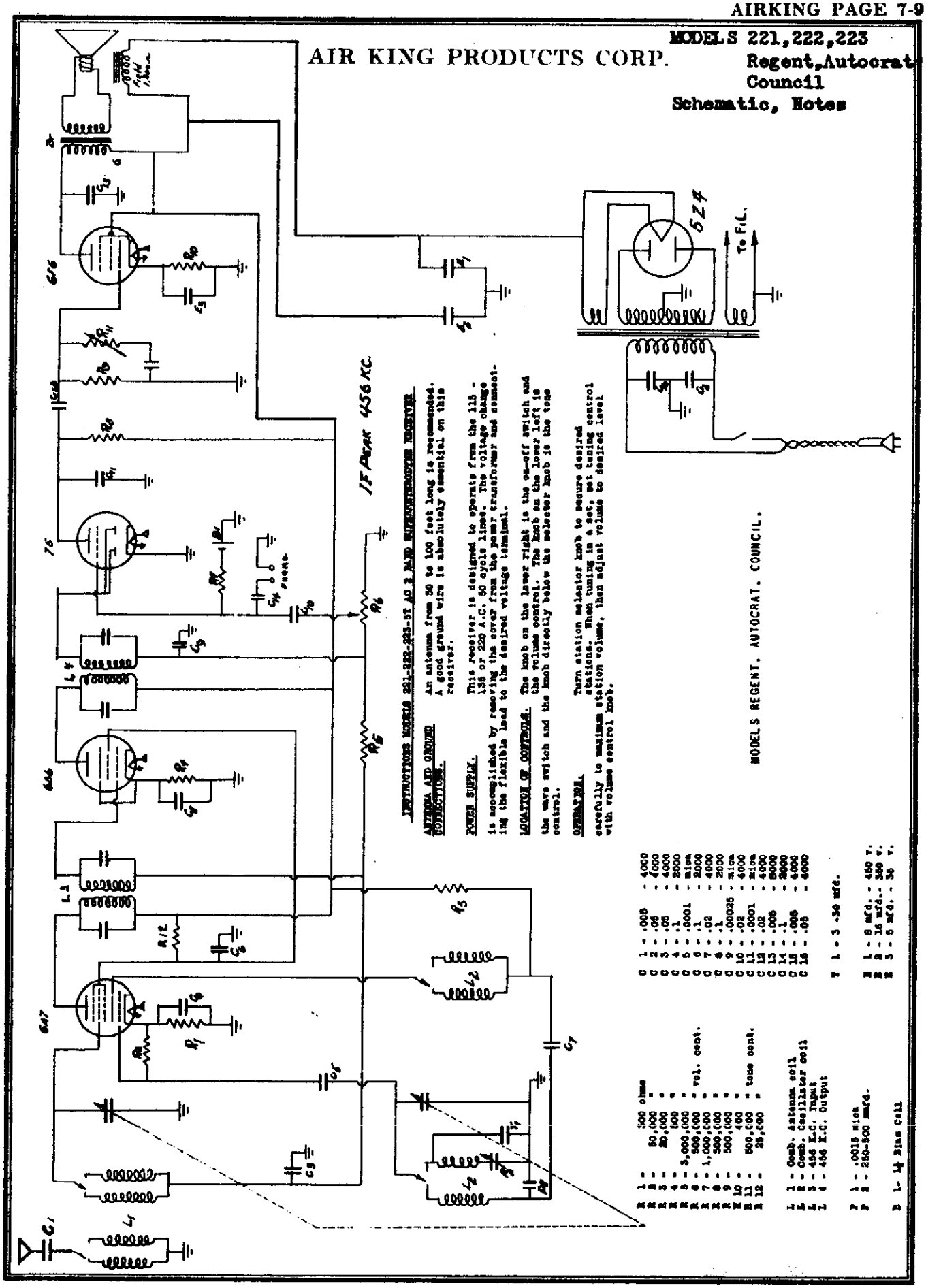

©John F. Rider, Publisher

MODEL 600
Schematic

AIR KING PRODUCTS CORP

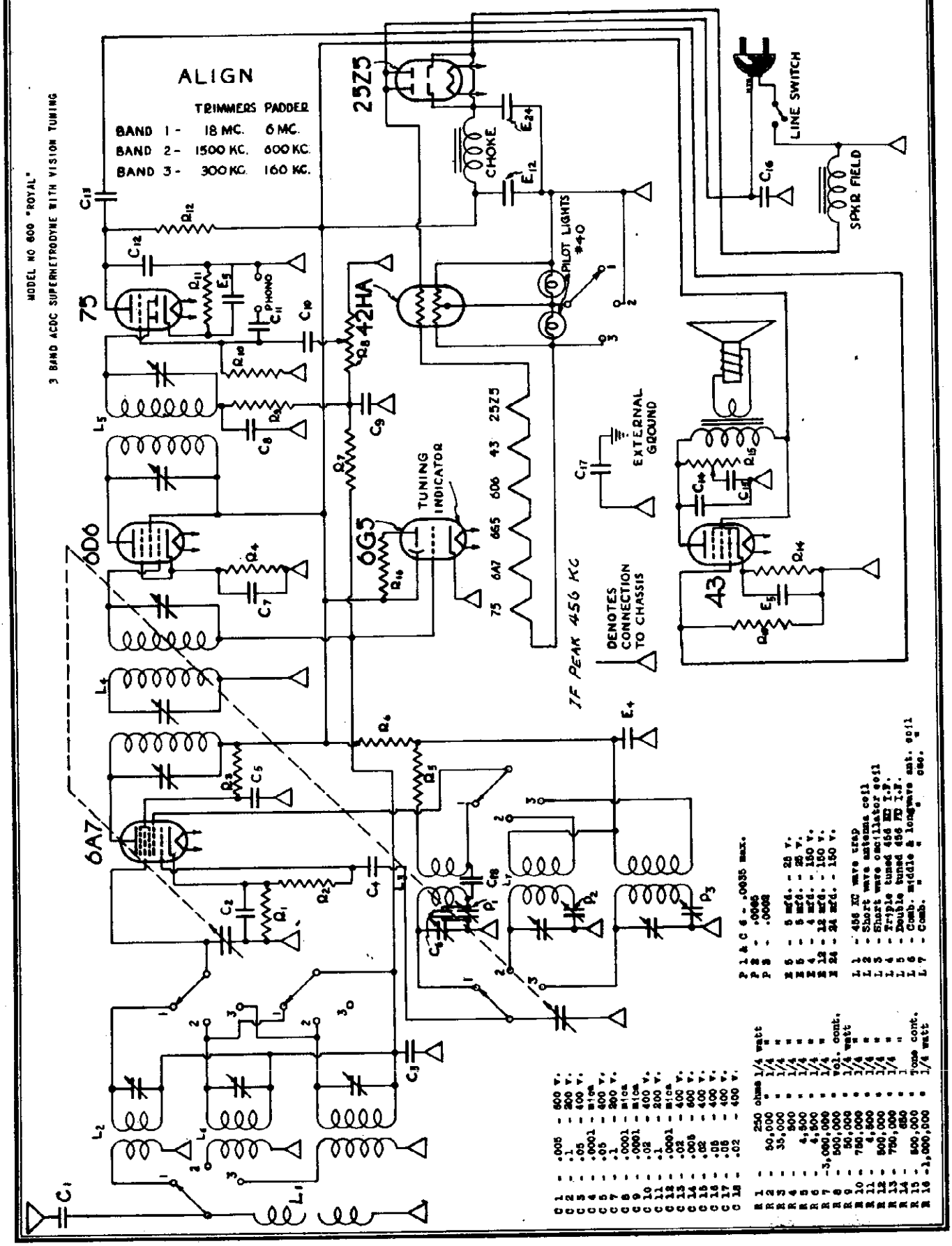

©John F. Rider, Publisher

ALLIED RADIO CORP.

MODEL 80-AC
MODEL G-9527
Schematics

PART NO.	DESCRIPTION	MODEL 80 AC	LIST PRICE
701	FILTER CONDENSER		2.40 EACH
702	.1 BY-PASS CONDENSER		.14 "
703	.05 " "		.14 "
704	.02 " "		.14 "
705	.25 " "		.15 "
706	.5 " "		.35 "
707	.00025 " "		.20 "
708	1-WATT RESISTOR		.20 "
709	MISCELLANEOUS RESISTORS(SPECIFY VALUES)(SEE DIAGRAM		.20 "
717	350 OHM POWER RESISTOR		.30 "
718	VOLUME CONTROL		1.25 "
719	SHORT WAVE AND BROADCAST SWITCH		.75 "
720	OSCILLATOR COIL 456 KC		.80 "
723	CORD AND PLUG		.50 "
733	POWER TRANSFORMER		4.25 "
738	3-GANG CONDENSER		4.50 "
739	1ST I F TRANSFORMER		2.10 "
740	2ND I F TRANSFORMER		2.10 "
741	PRE SELECTOR COIL		1.25 "
745	PILOT LAMP		.25 "
749	TRIMMER		.20 "
751	KNOB (LARGE)		.20 "
751-A	KNOBS		.15 "
754	PILOT LIGHT SOCKET		.15 "
758	SPEAKER		6.00 "
758-A	SPIDER AND VOICE COIL		.40 "
758-B	6" DIAPHRAM		.30 "
762	S.W. OSCILLATOR COIL		.80 "
763	ANTENNA S.W. OSCILLATOR COIL		.80 "
767	DIAL DRIVE DISC		.60 "
768	CELLULOID DRIVE DISC		.50 "
769	DIAL FACE		.60 "
777	DIAL POINTER		.12 "
779	CONVEX DIAL CRYSTAL		.30 "

MODEL 80 AC

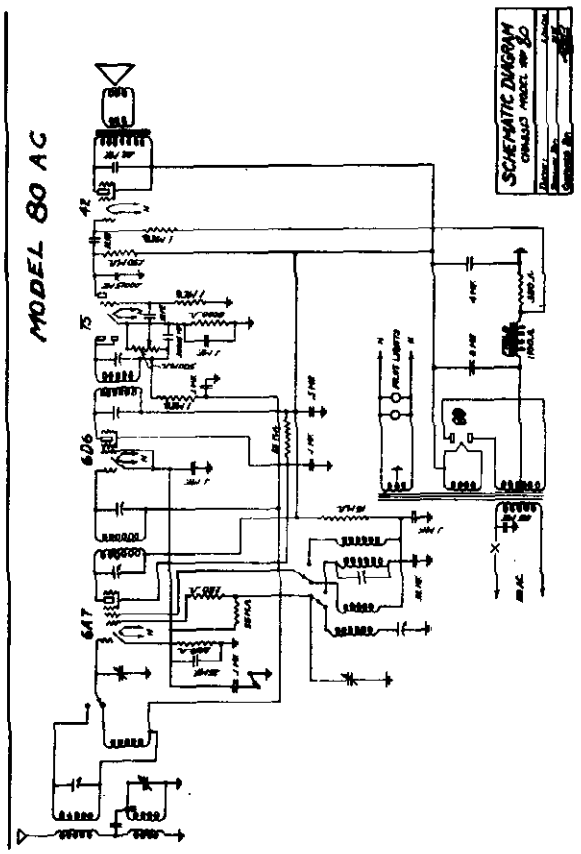

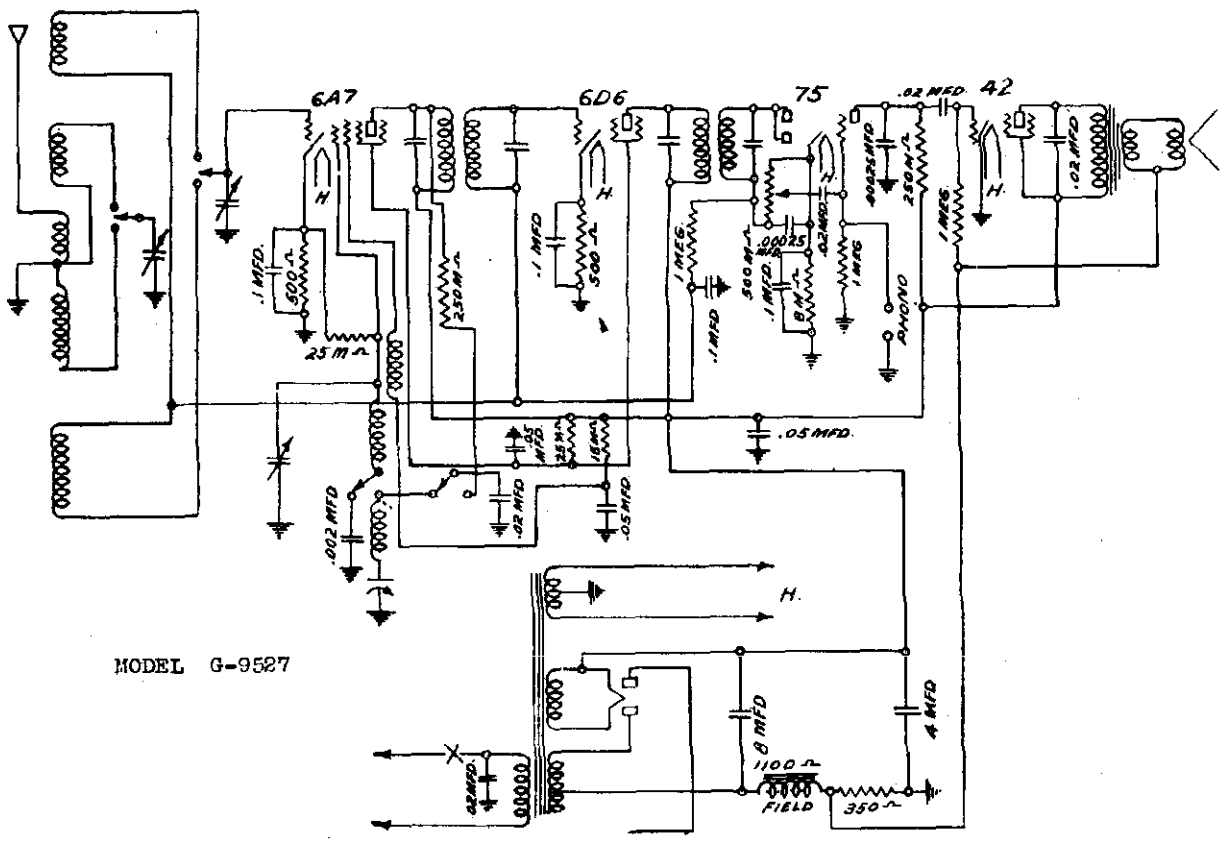

MODEL G-9527

©John F. Rider, Publisher

MODELS G-9575-
G-9605 incl.
Schematic, Notes

ALLIED RADIO CORP.

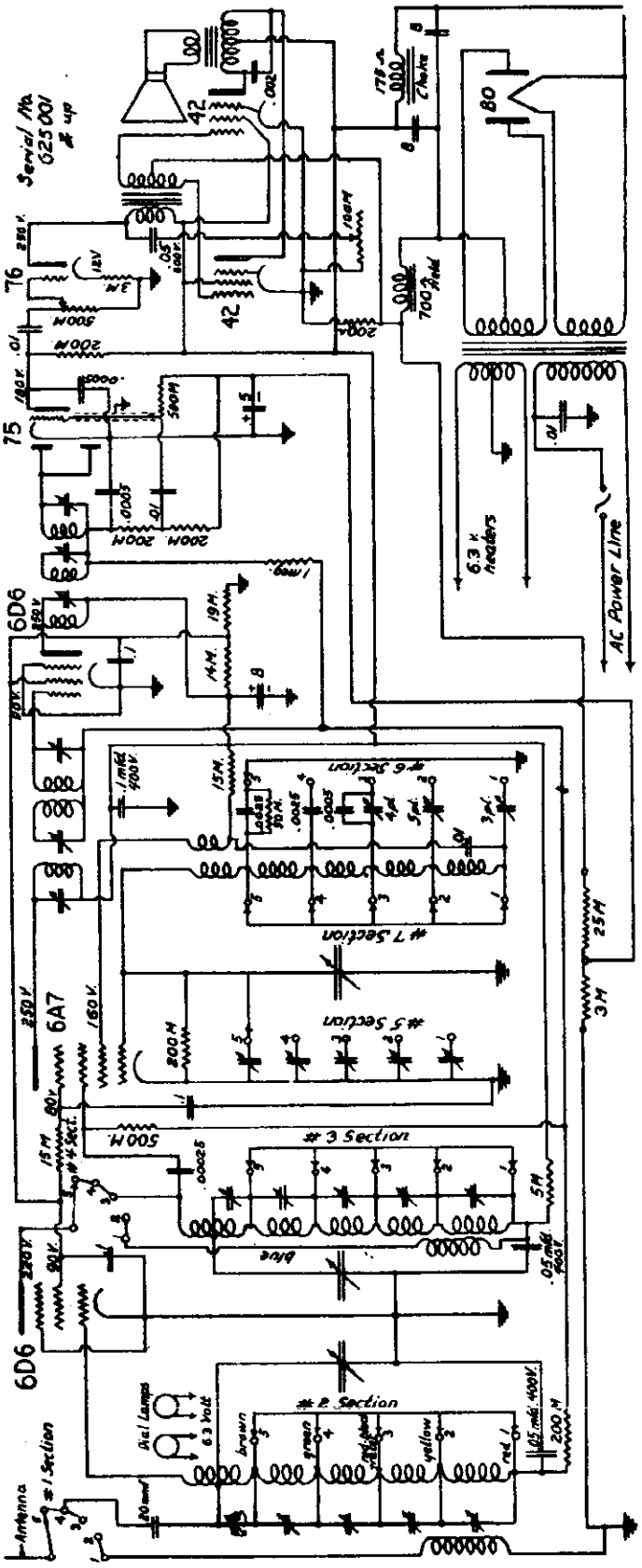

OPERATING INSTRUCTIONS — ALL WAVE 8-TUBE SUPERHETERODYNE

CAUTION: Do not attempt to operate on current other than that noted on the instrument.

INSTALLATION: A good aerial, 25 to 50 feet long, well away from surrounding metal structures and power lines, is essential for best results. Any of the new ALL-WAVE antennas is recommended for best performance. Power noise interference especially with short-wave reception. If the set is located where power noise is prevalent, it may be necessary to install an aerial high above the street and use a "transposition" lead-in to the set. A good ground connection (water pipe or equivalent) will also contribute to quieter reception.

SERVICE NOTES: If the radio fails to operate when unpacked, or stops working after a few days, proceed as follows: (1) Turn the tubes checked. (2) Remove the chassis from the cabinet and check for loose connections. Do not return the receiver unless you have made the above tests. This set was shipped, carefully inspected.

The intermediate stages are carefully phased to 456 KC. Should rephasing be necessary, attach the output lead from a 456 KC test oscillator to the grid cap of the 6A7 tube; keep the signal to a very low audible value and carefully adjust the three trimmer screws, two in the top and one in the bottom of each of the two coil cans, to loudest volume. If an output meter is available, it should be used across the two outside black leads at the speaker transformer. An all-wave oscillator having a range from 150 KC to 20 MC will be necessary to rephase the frequency bands. The oscillator output is attached to the aerial lead of the set and the oscillator output kept always at a low audible level. The R.F. coil trimmers are reached through a series of five (5) holes in the side of the R.F. shield can and correspond to frequency band Nos. 1, 2, 3, 4, and 5, from top down. The oscillator coil trimmers are seen on the under side of the set when the front of it is raised and parallel trimmers are seen on the under side of the set when the back of chassis and #5 are located along side the band switch, #1 being the one nearest the back of chassis and #5 the nearest the front. The dual porcelain trimmers at back of chassis are series padders, the left hand for band #3 and the right hand one for band #1. The series padder for band #5 is the single trimmer at the center of the chassis. Each band is trimmed first at the minimum end of its range, band #5 being first, #4 second, then #3, etc. Bands 5, 2, and 1 are also tracked near their maximum ranges, or with the tuning condenser turned well in, by adjusting that series padder belonging to the particular band being used, location of which is given above.

NOTE: Should it be necessary to write us for parts or information, always give the serial number of the set as stamped on the back of the chassis.

©John F. Rider, Publisher

MODEL G-961

ALLIED RADIO CORP.

Schematic

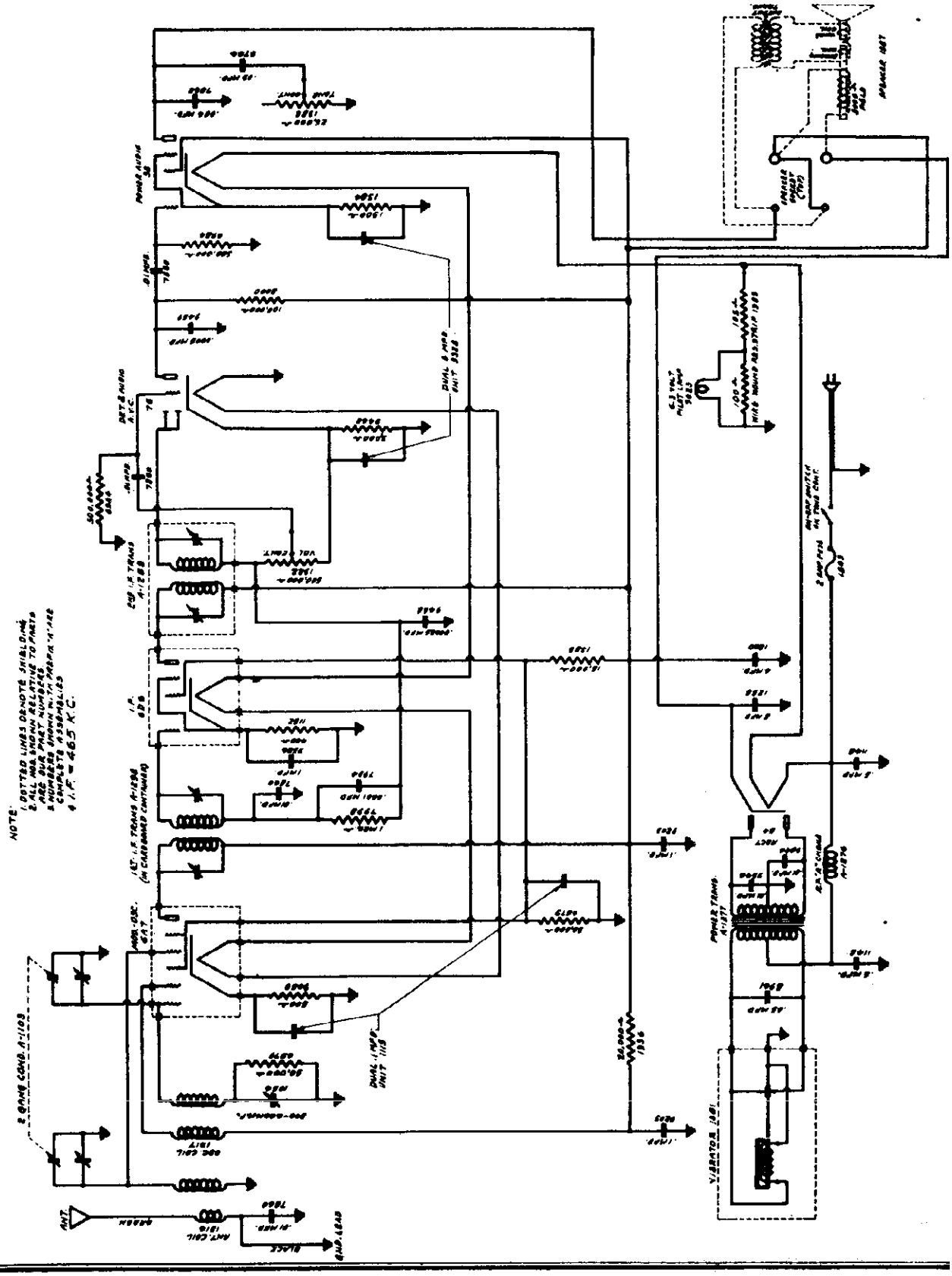

©John F. Rider, Publisher

MODEL G-9615
Alignment, Parts
Voltage

ALLIED RADIO CORP.

SERVICE NOTES
for the
32 VOLT DIRECT CURRENT
FIVE TUBE SUPERHETERODYNE RECEIVER

ALIGNMENT PROCEDURE: For properly aligning either the intermediate transformer or the gang condenser, it is necessary that an accurately calibrated oscillator be used with some type of output measuring device.

INTERMEDIATE ALIGNMENT:

1. Connect the high side of the oscillator output to the control grid of the 6A7 tube leaving the grid cap disconnected. Connect the ground side of the oscillator to the receiver ground lead.

2. Set the test oscillator frequency to 465 kilocycles (this must be accurate).

3. Align the first intermediate transformer by turning one of the trimmer screws up and down until maximum reading is obtained on the output meter and then adjust the other trimmer screw of the same transformer for maximum sensitivity.

4. Adjust the second intermediate transformer in the same manner.

NOTE: Two type intermediate transformer trimmers have been used in this receiver. One type has two parallel holes in the top of the shield, one for each trimmer. The other type has a brass hex nut for adjusting one trimmer, the other intermediate trimmer being adjusted with the trimmer screw located insideof the brass hex nut. Regardless of which type trimmer is used, the procedure is the same.

TO ALIGN THE VARIABLE CONDENSER: It is important when aligning to follow the procedure carefully, otherwise the receiver will lack sensitivity and the dial calibration will be incorrect.

1. Connect the high output side of the oscillator to the green receiver antenna lead and the ground to the black ground lead.

2. Set the test oscillator frequency and adjust the receiver dial to exactly 1720 kilocycles. BRING IN THIS 1720 KILOCYCLE SIGNAL BY ADJUSTING THE TRIMMER CONDENSER LOCATED ON TOP OF THE OSCILLATOR SECTION (front section) OF THE GANG CONDENSER.

3. Tune the receiver to approximately 600 kilocycles and adjust the test oscillator to this frequency.

While rocking the variable condenser slightly to the right and left adjust the 600 kilocycle padding condenser, which is located on and accessible through the hole provided in the right hand side of the chassis, for maximum sensitivity.

This completes the alignment procedure. It is recommended that all of the adjustments be gone over again. Generally, it will be found that improved results can be obtained if this is done.

VOLTAGE TABLE

Line Voltage : 32 Volts
Volume Control : Full On

TUBES		FILAMENT	PLATE	SCREEN	GRID NO. 2	GRID NO. 3 & 5	CATHODE
6A7	Oscillator & 1st Detector	6.4	195	93	123	93	4
6D6	I. F.	6.4	195				3.5
75	2nd Detector Diode & AVC	6.4	110#				1.5
38	Output	6.4	187	195			18.5
84	Rectifier	6.4	450 ea plate				300 D. C.

Triode Plate comparative voltage only.
Read all voltages from socket to set ground.
NOTE: Metal chassis is NOT ground.

PART NUMBER		LIST PRICE
1316	Antenna Coil	$ .98
1317	Oscillator Coil	.95
1298	1st I. F. Transformer	2.05
1288	2nd I. F. Transformer	2.10
1103	Gang Condenser	3.95
1276	R. F. "A" Choke	.25
1380	Tuning Dial	.28
9023	6.3 Volt .15 Ampere Pilot Light	.39
1054	Padding Condenser	.55
1322	Volume Control	.88
1382	Tone Control & Off and On Switch	1.21
1361	Tube Shield	.15
1260	4 Mfd. Wet Electrolytic Condenser	1.02
1258	8 Mfd. Wet Electrolytic Condenser	1.16
9328	2 x 5 Mfd.Dry Electrolytic Condenser	1.15
1377	Power Transformer	3.63
1381	32 Volt Vibrator	5.50
1548	Fuse Block Receptacle	.25
1549	2 Ampere Fuse	.08
7934	.0001 Mfd. Moulded Condenser	.21
9458	.00025 Mfd. Moulded Condenser	.21
9459	.0005 Mfd. Moulded Condenser	.21

PART NUMBER		LIST PRICE
9386	.1 Mfd. 200 Volt Condenser	$ .19
9203	.1 Mfd. 400 Volt Condenser	.21
7860	.01 Mfd. 400 Volt Condenser	.17
9546	.01 Mfd. 600 Volt Condenser	.18
8961	.05 Mfd. 400 Volt Condenser	.18
7862	.004 Mfd. 400 Volt Condenser	.17
1148	.5 Mfd. 200 Volt Condenser	.55
1115	2 x .1 Mfd. 200 Volt Condenser	.35
9766	.03 Mfd. 400 Volt Condenser	.19
1179	Large Knob	.15
9759	Small Knob	.14
7998	1 Meg Ohm 1/3 Watt Resistor	.19
6984	500,000 Ohm 1/3 Watt Resistor	.19
8000	100,000 Ohm 1/3 Watt Resistor	.19
6879	50,000 Ohm 1/3 Watt Resistor	.19
9089	500 Ohm 1/3 Watt Resistor	.19
1152	400 Ohm 1/3 Watt Resistor	.19
9460	3,000 Ohm 1/3 Watt Resistor	.19
1384	1,500 Ohm 1/2 Watt Resistor	.19
1336	20,000 Ohm 1/2 Watt Resistor	.19
1385	15,000 Ohm 1 Watt Resistor	.22

©John F. Rider, Publisher

©John F. Rider Publisher

ALLIED RADIO CORP.

MODEL 8 G-9617, 9619, 9621, 9623, 9625, 9627

Schematic, Voltage, Alignment, Parts List

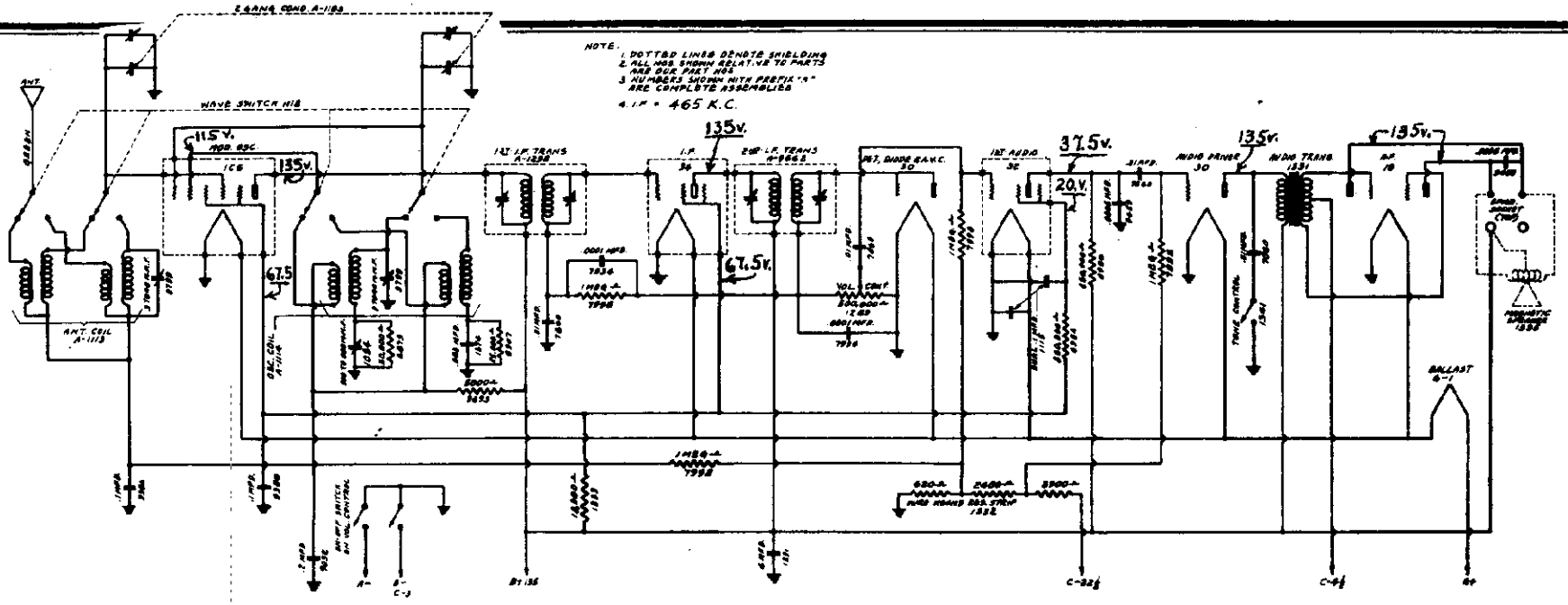

NOTE: Two type intermediate transformer trimmers have been used in this receiver. One type has two parallel holes in the top of the shield, one for each trimmer. The other type has a brass hex nut for adjusting one trimmer, the other intermediate trimmer being adjusted with the trimmer screw located inside of the brass hex nut. Regardless of which type trimmer is used the procedure is the same.

TO ALIGN THE VARIABLE CONDENSER: It is important when aligning to follow the procedure carefully, otherwise the receiver will lack sensitivity and the dial calibration will be incorrect.

1. Connect the high output side of the oscillator to the receiver antenna lead and the ground to the chassis.

2. Place the band selector switch for operation on the short wave band, tune the receiver to exactly 15 megacycles on the dial and set the test oscillator frequency to exactly 15 megacycles. **THEN TUNE IN THE 15 MEGACYCLE SIGNAL BY ADJUSTING THE TRIMMER MOUNTED ON TOP OF THE OSCILLATOR SECTION OF THE GANG CONDENSER TO MAXIMUM OUTPUT.**

Looking at the front of the receiver the oscillator section is the rear section of the gang condenser.

3. Set the band selector switch for operation on the broadcast band, adjust the test oscillator frequency to 1400 kilocycles and set the receiver dial to exactly 1400 kilocycles. **NEXT, BRING IN THE 1400 KILOCYCLE SIGNAL TO MAXIMUM OUTPUT BY ADJUSTING THE TRIMMER LOCATED UNDERNEATH AND NEAR THE CENTER FRONT OF THE CHASSIS.**

4. After making this adjustment tune the dial to 1720 kilocycles and set theoscillator frequency to 1720 kilocycles. If the 1720 kilocycle signal cannot be received reduce the 1400 kilocycle trimmer capacity until the 1720 kilocycle signal is brought in.

5. Next, set the receiver dial and test oscillator to exactly 1400 kilocycles, and adjust the trimmer located on the front section of the gang condenser for maximum sensitivity.

6. Leave the band selector switch for operation on the broadcast band, tune the receiver and set the oscillator to approximately 600 kilocycles. Then adjust the 600 kilocycle padding condenser,which is located on and accessible through the small hole in the front of the chassis, for maximum sensitivity. As this adjustment is quite critical it is necessary to rock the condenser slightly to the right and left to find the point of greatest sensitivity.

7. Place the band selector switch for operation on the short wave band, adjust the test oscillator frequency to exactly 15 megacycles and set the receiver dial to 15 megacycles. Turn the receiver on its back with the dial up and adjust the trimmer, which is mounted on the top of the coil underneath and near the right hand side of the chassis, for maximum output. Be sure to rock the condenser slightly to the right and left when making this adjustment.

PART NUMBER		LIST PRICE
1113	Antenna Coil	$1.65
1114	Oscillator Coil	1.65
1298	1st I. F. Transformer	2.05
9662	2nd I. F. Transformer	2.05
1331	Audio Transformer	1.40
1291	4 Mfd. Wet Electrolytic Condenser	.85
1115	Dual .1 Mfd. 200 Volt Condenser	.35
7860	.01 Mfd. 400 Volt Condenser	.17
9052	.2 Mfd. 200 Volt Condenser	.25
9459	.0005 Mfd. Mica Mould Condenser	.21
7934	.0001 Mfd. Mica Mould Condenser	.21
1374	.005 Mfd. Mica Mould Condenser	.21
1332	Wire Wound Resistor Strip	.35
7998	1 Meg Ohm 1/3 Watt Resistor	.19
6984	500,000 Ohm 1/3 Watt Resistor	.19
8906	250,000 Ohm 1/3 Watt Resistor	.19
6879	50,000 Ohm 1/3 Watt Resistor	.19
1333	15,000 Ohm 1/2 Watt Resistor	$ .19
9693	5,000 Ohm 1/3 Watt Resistor	.19
8907	25,000 Ohm 1/3 Watt Resistor	.19
1292	6 Conductor Battery Cable	.68
1289	Volume Control with D.P.S.T. Switch	1.24
1341	Tone Control Switch	.40
1370	One Color Tuning Dial	.30
1338	Two Color Tuning Dial	.35
1103	Two Gang Condenser	5.95
1361	Tube Shield	.15
9986	Tube Shield	.11
1053	Padding Condenser	.50
1054	Padding Condenser	.55
9799	Trimmer Condenser	.15
6-1	Voltage Regulator Tube	3.00
1179	Knob, Large	.15
1180	Knob, Small with Dot	.17
9758	Knob, Small	.14

MODELS G-9643,9645
Schematic

ALLIED RADIO CORP.

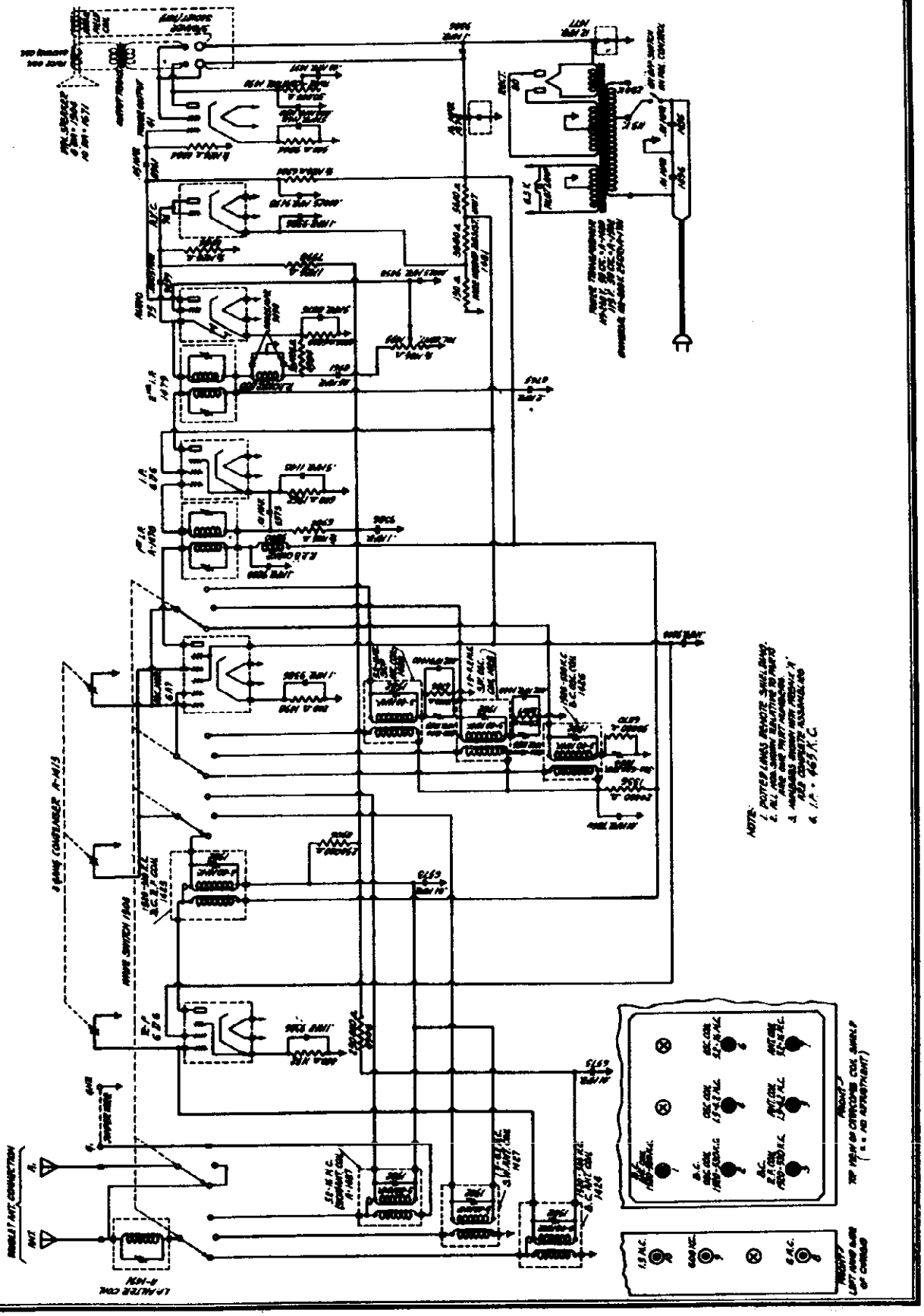

©John F. Rider, Publisher

ALLIED RADIO CORP.

SERVICE NOTES
for the
SEVEN TUBE AC OPERATED
THREE BAND SUPERHETERODYNE RECEIVER
1520-550 KILOCYCLES
1.5-4.2 MEGACYCLES
5.4-16 MEGACYCLES

Realignment of this receiver should never be necessary unless one of the oscillator, antenna, or RF coils has been replaced and then only the frequency band in which the coil is used will require realignment. Lack of sensitivity, selectivity, and poor tone quality may be due to any one or a combination of causes such as weak or defective tubes or speaker, inadequate or excessively long antenna, open or grounded bias resistor, bypass condenser, etc. Under no circumstances should realignment be attempted until all other possible sources of trouble have been first thoroughly investigated and have definitely proven not to be the cause. If an IF tube is replaced it is advisable to realign the IF amplifier particularly if the replacement tube is made by a different manufacturer than the one in the receiver.

NOTE: NEVER LIFT THE RECEIVER BY GRASPING THE CATACOMB SHIELD, TO DO SO MAY MOVE THE SHIELD THEREBY DETUNING THE RECEIVER.

ALIGNMENT PROCEDURE:

It is important when aligning to carefully follow the procedure in the order given, otherwise the receiver will lack sensitivity and the dial calibration will be incorrect. IT IS IMPERATIVE THAT AN ACCURATELY CALIBRATED OSCILLATOR BE USED WITH SOME TYPE OF OUTPUT MEASURING DEVICE.

INTERMEDIATE ALIGNMENT:

1. Connect the high side of the oscillator output to the control grid of the 6A7 tube, leaving the grid cap disconnected. Connect the ground side of the oscillator to the receiver chassis.

2. Set the test oscillator frequency to 465 kilocycles. (This must be accurate).

3. Align the first intermediate transformer by turning one of the trimmer screws up and down (increasing and decreasing capacity) until maximum reading is obtained on the output meter, after which adjust the other trimmer screw of the same transformer for maximum sensitivity.

4. Adjust the other intermediate transformer in the same manner.

NOTE: Two type intermediate transformer trimmers have been used in this receiver. One type has two variable holes in the top of the shield, one for each trimmer. The other type has a brass hex nut for adjusting one trimmer, the other intermediate trimmer being adjusted with the trimmer screw located inside of the brass hex nut. Regardless of which type trimmer is used, the procedure is the same.

TO ALIGN THE VARIABLE CONDENSER:

Adjustment of the trimmer condensers, located inside of and accessible through the holes found in the top of the catacomb shield (mounted on top and in the left hand front corner of the receiver) will be referred to by numbers as indicated on the circuit diagram showing the relative location of these trimmers.

1. Connect the high output side of the test oscillator to the receiver antenna post through a 250 MMFD (.00025 MFD) condenser and the ground to the set ground post.

2. Place the band selector switch for operation on the 1520 to 530 kilocycle (broadcast) band. Tune the receiver to exactly 1400 kilocycles on the dial and set the test oscillator frequency to exactly 1400 kilocycles. THEN BRING IN THE 1400 KILOCYCLE SIGNAL TO MAXIMUM OUTPUT BY ADJUSTING THE TRIMMER MARKED NO. 2 ON CATACOMB DIAGRAM, after which adjust No. 1 and No. 3 trimmers in the order named for maximum sensitivity.

3. Leave the band selector switch for operation on the broadcast band (1520 to 530 kilocycles) and tune the receiver and set the oscillator to approximately 600 kilocycles. Then adjust the 600 kilocycle padding condenser No. 9 which is located on and accessible through the hole in the left hand side of the chassis for maximum sensitivity. As this adjustment is quite critical, it is necessary to rock the variable condenser slightly to the right and to the left to find the point of greatest sensitivity.

4. Recheck the alignment at 1400 kilocycles as the 600 kilocycle adjustment may have changed the alignment at 1400 kilocycles.

5. Place the band selector switch for operation on the 1.5 to 4.2 megacycle band and set the test oscillator frequency and tune the receiver dial to exactly 3.8 megacycles. THEN TUNE IN THIS 3.8 MEGACYCLE SIGNAL TO MAXIMUM OUTPUT BY ADJUSTING CATACOMB TRIMMER NO. 4, next adjust trimmer No. 5 for maximum sensitivity.

6. With the band selector switch in the same position (1.5 to 4.2 megacycle band) tune the receiver dial and set the oscillator frequency to approximately 1.7 megacycles and then while rocking the variable condenser slightly to the right and left, adjust the 1.7 megacycle trimmer No. 10 (located on the left hand side of the chassis) for maximum sensitivity.

7. Recheck 3.8 megacycle adjustments.

8. Adjust the band selector switch for operation on the 5.2 to 16 megacycle band and tune the receiver dial and set the oscillator frequency to exactly 15 megacycles. When adjusting catacomb trimmer No. 6 two peaks (the fundamental and the image peak) will be noticed. CARE MUST BE TAKEN SO THAT THE FUNDAMENTAL PEAK AND NOT THE IMAGE PEAK IS USED FOR ALIGNING THE RECEIVER AT 15 MEGACYCLES. First back off catacomb trimmer No. 6 to minimum capacity, next screw down the trimmer (add capacity) until the first peak which is the fundamental and the one you are to use is tuned in. If the trimmer is screwed down beyond the point where this first peak is received the incorrect image peak will be tuned in. When the first peak has been located adjust catacomb trimmer No. 6 to BRING IN THE 15 MEGACYCLE SIGNAL TO MAXIMUM OUTPUT. After completing this adjustment always check to see if the proper peak has been used. To do this leave the test oscillator frequency at 15 megacycles and increase the output of the test oscillator, then tune the receiver dial to approximately 14 megacycles. Vary the receiver dial slightly to the right and left of 14 megacycles and if the fundamental peak was used in aligning at 15 megacycles the test oscillator signal will be heard at approximately 14 megacycles on the set dial. If it is not possible to receive the signal then the fundamental peak was not used and the 15 megacycle adjustment of trimmer No. 6 must be gone over and properly adjusted. After correctly completing catacomb trimmer No. 6 adjustment adjust catacomb trimmer No. 7 to maximum sensitivity. Should two peaks be noticed with this trimmer always adjust trimmer No. 7 to the one that requires the most capacity to tune in.

©John F. Rider, Publisher

MODELS G-9643,9645
Alignment,Part 2
Voltage,Parts List

ALLIED RADIO CORP.

9. Leave the band selector switch for operation on 5.4 to 16 megacycle band, set the oscillator frequency and tune the receiver dial to approximately 6 megacycles. While rocking the variable condenser slightly to the right and left, adjust the 6 megacycle trimmer No. 8 (located on the left hand side of the chassis) for maximum sensitivity.

10. Recheck 15 megacycle adjustments.

11. Some code and aircraft signals are broadcast on a frequency exactly the same or near the IF frequency of the receiver. To eliminate interference from these signals a 465 kilocycle filter (mounted in the coil shield located underneath and towards the front of the chassis) is incorporated in the set. To adjust, set the oscillator frequency (with oscillator output connected to set antenna and ground) TO EXACTLY 465 KILOCYCLES turn the receiver on and adjust the trimmer located on and accessible through the top of the filter shield for MINIMUM 465 KILOCYCLE SIGNAL.

This completes the alignment and it is recommended that all of the adjustments be gone over again. Generally it will be found that improved results can be obtained if this is done. Assuming that all tubes and component parts of the set are okeh, extreme inaccuracies in the dial calibration, low sensitivity, and poor selectivity are indications that the alignment procedure has not been followed. Should these conditions be apparent, proceed to realign, starting at the IF alignment and carefully follow each step in the order given.

VOLTAGE TABLE

Line voltage : 115 Volt 60 Cycle
Volume Control : Full on
Wave Band : Broadcast

TUBE	FIL.	PLATE	SCREEN	CATHODE	GRID NO.1	GRID NO.2	GRID NO. 3 and 5
6A7 Oscillator & 1st Detector	6.2	250	94	2.5	4.5	175	94
6D6 Radio Frequency	6.2	250	94	3.4			
6D6 Intermediate Frequency	6.2	250	94	3.2			
75 2nd Detector & 1st Audio	6.2	70#		1.2			
76 Automatic Volume Control	6.2			3.4			
41 Output	6.2	250	94	15			
80 Rectifier	4.9		80 M. A. Total Drain				

#- Triode Plate
Read all voltages from socket to chassis with 1,000 ohm per volt meter.

PART NUMBER		LIST PRICE	PART NUMBER		LIST PRICE
1478	First I. F. Transformer	$2.10	6765	.2 Mfd. 400 Volt Condenser	$ .26
1479	Second I. F. Transformer	2.10	9386	.1 Mfd. 200 Volt Condenser	.19
1424	Antenna Coil for 1520-530 K.C. Band	.90	1148	.5 Mfd. 200 Volt Condenser	.55
1426	Oscillator Coil for 1520-530 K.C. Band	.75	9203	.1 Mfd. 400 Volt Condenser	.20
1425	R. F. Coil for 1520-530 K. C. Band	.95	6573	.01 Mfd. 200 Volt Condenser	.17
1427	Antenna Coil for 1.5-4.2 M. C. Band	.55	7998	1 Meg Ohm 1/3 Watt Resistor	.19
1428	Oscillator Coil for 1.5-4.2 M. C. Band	.55	6984	500,000 Ohm 1/3 Watt Resistor	.19
1487	Antenna Coil for 5.4-16 M. C. Band	.70	6880	6,000 Ohm 1/3 Watt Resistor	.19
1488	Oscillator Coil for 5.4-16 M.C. Band	.75	1498	200 Ohm 1/3 Watt Resistor	.19
1433	Nine Cell Ghacomb Coil Shield	1.50	1152	400 Ohm 1/3 Watt Resistor	.19
1503	Wave Switch 3 gang 3 positions	2.25	9544	500 Ohm 1 Watt Resistor	.22
9799	Trimmer Condenser	.15	1363	600 Ohm 1/3 Watt Resistor	.19
1054	Padding Condenser	.55	1701	Power Transformer (Universal)	9.25
1055	Trimmer Condenser	.55	1502	Power Transformer 115 Volt 50-60 Cycle	5.25
1491	I. F. Filter Assembly	1.50	1480	Power Transformer 115-230 Volt 50-60 Cycle	5.75
9800	R. F. "B" Choke	.22	1481	Vitreous Resistor Strip	1.10
1415	Three Gang Condenser	4.50	1504	8" Dynamic Speaker	9.50
1505	Two Speed Planetary Drive	1.10	1671	10" Dynamic Speaker	12.00
1511	Tuning Dial with Glass	2.50	1738	Large Bakelite Tuning Knob (Bottom Sec.)	.25
1476	16 Mfd. Wet Electrolytic Condenser	1.40	1739	Bakelite Tone Control & Top Section tuning control knob	.22
1477	12 Mfd. Wet Electrolytic Condenser	1.25	1794	Bakelite Band Selector Knob	.25
8876	5 Mfd. Dry Electrolytic Condenser	.77	1740	Bakelite Volume Control Knob	.22
9458	.00025 Mfd. Moulded Condenser	.21	1567	Large Wood Tuning Knob (Bottom Section)	.30
9459	.0005 Mfd. Moulded Condenser	.21	1568	Small Wood Tuning Knob (Top Section)	.25
1496	.01 Mfd. 600 Volt Condenser	.18	1570	Wood Band Selector Knob	.30
8961	.05 Mfd. 400 Volt Condenser	.18	1569	Wood Volume Control Knob	.25
7862	.004 Mfd. 600 Volt Condenser	.17	1571	Wood Tone Control Knob	.25
1497	.03 Mfd. 600 Volt Condenser	.19			

©John F. Rider, Publisher

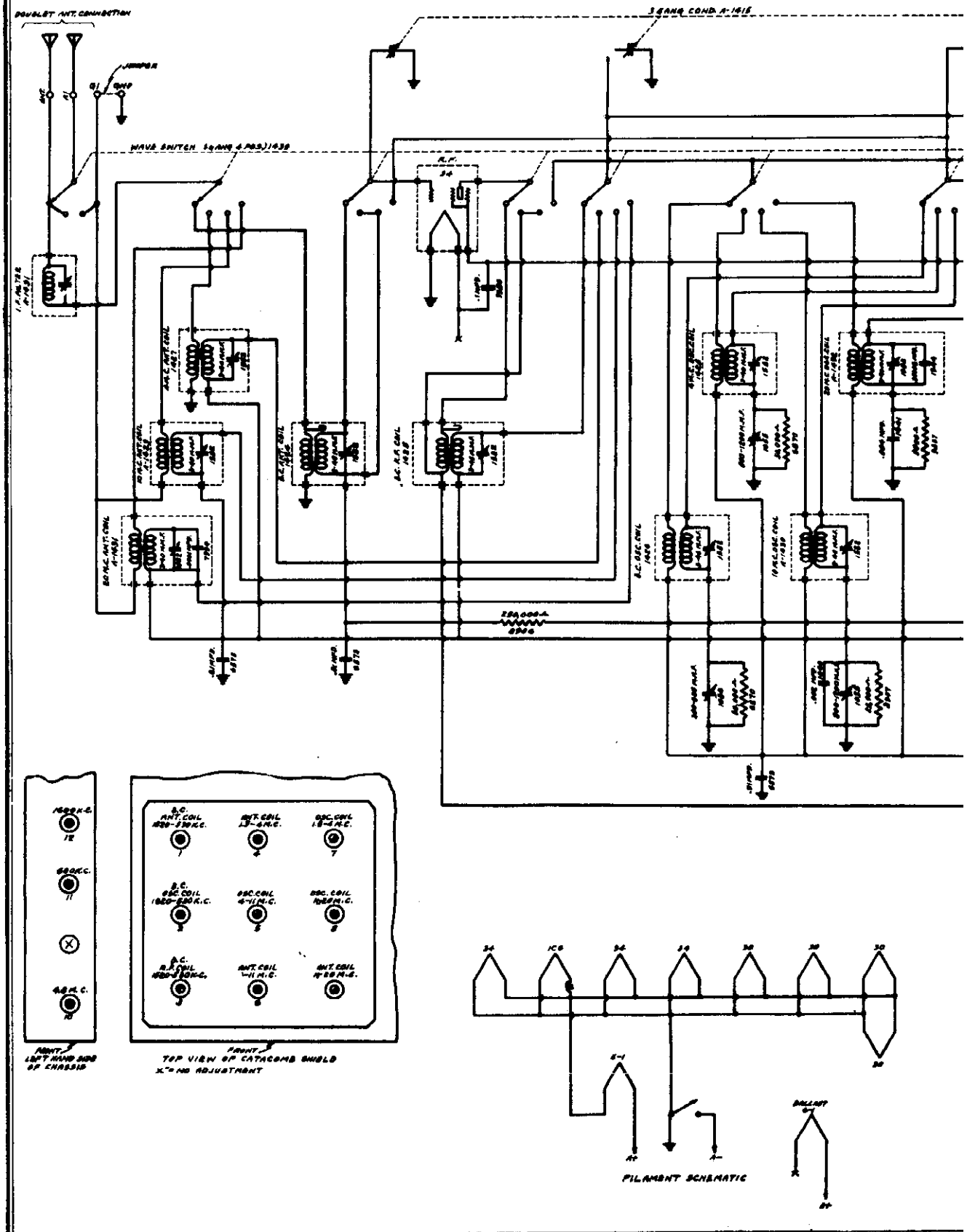

©John F. Rider, Publisher

ADIO CORP.

MODEL G-9629,9631,9633,
9635,9637,9639
Schematic

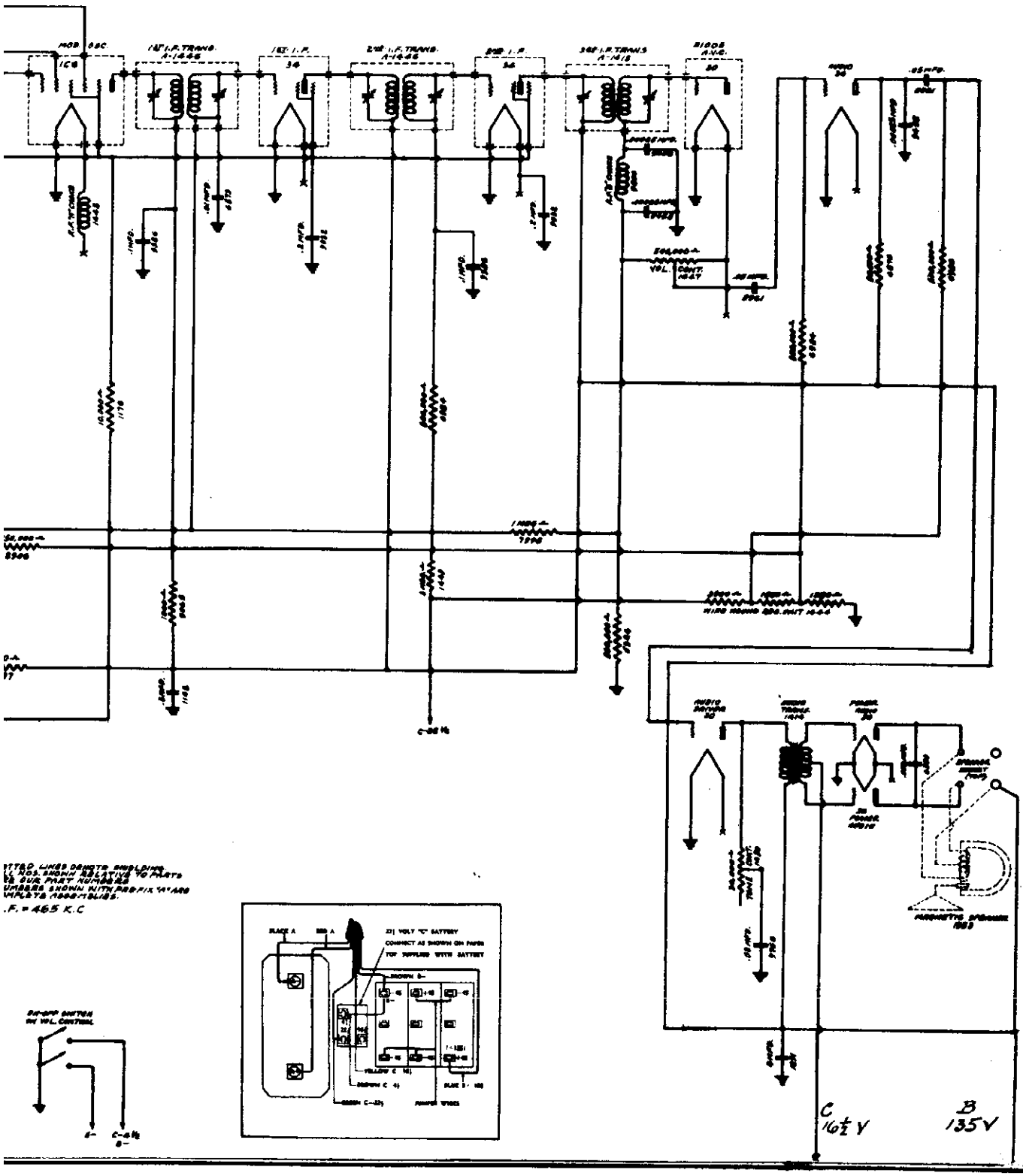

ALLIED RADIO CORP.

MODEL G-9629,9631,9633
9635,9637,9639
Alignment, Part 1

SERVICE NOTES
for the
TEN TUBE BATTERY OPERATED
FOUR BAND SUPERHETERODYNE RECEIVER
1520-535 KILOCYCLES
1.5 -4.2 MEGACYCLES
4 -11 MEGACYCLES
10 -20 MEGACYCLES

Realignment of this receiver should never be necessary unless one of the oscillator, antenna or RF coils has been replaced and then only the frequency band in which that coil is used will require realignment. Lack of sensitivity, selectivity, and poor tone quality may be due to any one or a combination of causes such as weak or defective tubes or speaker, inadequate or excessively long antenna, open or grounded bias resistor, bypass condenser, etc. Under no circumstances should realignment be attempted until all other possible sources of trouble have been first thoroughly investigated and have been definitely proven not to be the cause. If an IF tube is replaced it is advisable to realign the IF amplifier particularly if the replacement tube is one of a different manufacture than the one in the receiver.

NOTE: NEVER LIFT THE RECEIVER BY GRASPING THE CATACOMB SHIELD, TO DO SO MAY MOVE THE SHIELD THEREBY DETUNING THE RECEIVER.

ALIGNMENT PROCEDURE: It is important when aligning to carefully follow the procedure in the order given, otherwise the receiver will lack sensitivity and the dial calibration will be incorrect. IT IS IMPERATIVE THAT AN ACCURATELY CALIBRATED OSCILLATOR BE USED WITH SOME TYPE OF OUTPUT MEASURING DEVICE.

INTERMEDIATE ALIGNMENT:

1. Connect the high side of the oscillator output to the control grid of the 1C6 tube, leaving the grid cap disconnected. Connect the ground side of the oscillator to the receiver ground post.

2. Set the test oscillator frequency to 465 kilocycles. (This must be accurate).

3. Align the first intermediate transformer by turning one of the trimmer screws up and down (increasing and decreasing capacity) until maximum reading is obtained on the output meter, after which adjust the other trimmer screw of the same transformer for maximum sensitivity.

4. Adjust the other intermediate transformers in the same manner.

NOTE: Two type intermediate transformer trimmers have been used in this receiver. One type has two parallel holes in the top of the shield, one for each trimmer. The other type has a brass hex nut for adjusting one trimmer, the other intermediate trimmer being adjusted with the trimmer screw located inside of the brass hex nut. Regardless of which type trimmer is used, the procedure is the same.

TO ALIGN THE VARIABLE CONDENSER:

Adjustment of the trimmer condensers, located inside of and accessible through the holes found in the top of the catacomb (mounted on top and in the left hand front corner of the receiver) will be referred to by numbers as indicated on the circuit diagram showing the relative location of these trimmers.

1. Connect the high output side of the oscillator through a 250 mmfd. (.00025 Mfd.) to the receiver antenna post and the ground to the ground post.

2. Place the band selector switch for operation on the 1520 to 535 kilocycle band (broadcast), tune the receiver to exactly 1400 kilocycles on the dial and set the test oscillator frequency to exactly 1400 kilocycles. THEN BRING IN THE 1400 KILOCYCLE SIGNAL TO MAXIMUM OUTPUT BY ADJUSTING TRIMMER MARKED No. 2 ON CATACOMB DIAGRAM, after which adjust No. 1 and No. 3 trimmers in the order named for maximum sensitivity.

3. Leave the band selector switch for operation on the broadcast band (1520-535 kilocycles) and tune the receiver and set the test oscillator to approximately 600 kilocycles. Then while rocking the condenser slightly to the right and left adjust the 600 kilocycle padding condenser No. 11, which is located on and accessible through the hole provided on the left hand side of the chassis, for maximum sensitivity.

4. Recheck the alignment at 1400 kilocycles as the 600 kilocycle adjustment may have changed the alignment at 1400 kilocycles.

5. Place the band selector switch for operation on the 1.5 to 4.2 megacycle band and set the test oscillator frequency and tune the receiver dial to EXACTLY 3.8 MEGACYCLES. THEN TUNE IN THIS 3.8 MEGACYCLE SIGNAL TO MAXIMUM OUTPUT BY ADJUSTING CATACOMB TRIMMER NO. 7. Next adjust catacomb trimmer No. 4 for maximum sensitivity.

6. With the band selector switch in the same position (1.5-4.2 megacycle band) tune the receiver dial and set the oscillator frequency to approximately 1600 kilocycles, and then while rocking the variable condenser slightly to the right and left adjust the 1600 kilocycle trimmer No. 12 located on the left hand side of the chassis for maximum sensitivity.

7. Recheck 3.8 megacycle adjustments.

8. Adjust the band selector switch for operation on the 4 to 11 megacycle band and tune the receiver dial and set the oscillator frequency to exactly 10.5 megacycles. When adjusting catacomb trimmer No. 5 two peaks (the fundamental and the image peak) will be noticed. CARE MUST BE TAKEN SO THAT THE FUNDAMENTAL PEAK AND NOT THE IMAGE PEAK IS USED FOR ALIGNING THE RECEIVER AT 10.5 MEGACYCLES. First back off catacomb trimmer No. 5 to minimum capacity, next screw down the trimmer (add capacity) until the first peak which is the fundamental and the one you are to use is tuned in. If the trimmer is screwed down beyond the point where this first peak is received the incorrect image peak will be tuned in. When the first peak has been located adjust catacomb trimmer No. 5 to BRING IN THE 10.5 MEGACYCLE SIGNAL TO MAXIMUM OUTPUT. After completing this adjustment always check to see if the proper peak has been used. To do this leave the test oscillator frequency at 10.5 megacycles, increase its output, and tune the receiver dial to approximately 9.5 megacycles. Vary the receiver dial slightly to the right and left of 9.5 megacycles and if the fundamental peak was used in aligning at 10.5 megacycles the test oscillator signal will be heard at approximately 9.5 megacycles on set dial. If it is not possible to receive the signal then the fundamental peak was not used and the 10.5 megacycle adjustment of trimmer No. 5 must be gone over and properly adjusted. After correctly completing catacomb trimmer No. 5 adjustment adjust catacomb trimmer No. 6 for maximum sensitivity. Should two peaks be noticed with this trimmer always adjust trimmer No. 6 to the one that requires the most capacity.

MODELS G-9629,9631,9633
9635,9637,9639
Alignment,Part 2
Voltage,Parts List

ALLIED RADIO CORP.

9. With the band selector switch adjusted for operation on the same band (4-11 megacycles) set the test oscillator frequency and tune the receiver dial to approximately 4.8 megacycles. Then while rocking the variable condenser slightly to the right and left adjust the 4.8 megacycle trimmer No. 10, located on the left hand side of the chassis for maximum sensitivity.

10. Recheck the 10.5 megacycle adjustment.

11. Adjust the band selector switch for operation on the 10 to 20 megacycle band, tune the receiver dial and set the oscillator frequency to exactly 19 megacycles. When adjusting catacomb trimmer No. 8 two peaks (the fundamental and the image peak) will be noticed. CARE MUST BE TAKEN SO THAT THE FUNDAMENTAL PEAK AND NOT THE IMAGE PEAK IS USED FOR ALIGNING THE RECEIVER AT 19 MEGACYCLES. First back off catacomb trimmer No. 8 to minimum capacity, next screw down the trimmer (add capacity) until the first peak which is the fundamental and the one you are to use is tuned in. If the trimmer is screwed down beyond the point where this first peak is received the incorrect image peak will be tuned in. When the first peak has been located adjust catacomb trimmer No. 8 to BRING IN THE 19 MEGACYCLE SIGNAL TO MAXIMUM OUTPUT. After completing this adjustment always check to see if the proper peak has been used. To do this leave the test oscillator frequency at 19 megacycles, increase its output, and tune the receiver dial to approximately 18 megacycles. Vary the receiver dial slightly to the right and left of 18 megacycles and if the fundamental peak was used in aligning at 19 megacycles the test oscillator signal will be heard at approximately 18 megacycles on set dial. If it is not possible to receive the signal then the fundamental peak was used and the 19 megacycle adjustment of trimmer No. 8 must be gone over and properly adjusted. After correctly completing catacomb trimmer No. 8 adjustment adjust catacomb trimmer No. 9 for maximum sensitivity. Should two peaks be noticed with this trimmer always adjust trimmer No. 9 to the one that requires the most capacity.

12. Some code and aircraft signals are broadcast on a frequency exactly the same or near the IF frequency of the receiver. To eliminate interference from these signals a 465 kilocycle filter (mounted in the coil shield located underneath and towards the front of the chassis) is incorporated in the set. To adjust, set the oscillator frequency (with oscillator output connected to set antenna and ground) TO EXACTLY 465 KILOCYCLES, turn the receiver on end and adjust the trimmer located on and accessible through the top of the filter shield for MINIMUM 465 KILOCYCLE SIGNAL.

This completes the alignment and it is recommended that all of the adjustments be gone over again. Generally it will be found that improved results can be obtained if this is done. Assuming that all tubes and component parts of the set are okeh, then extreme inaccuracies in the dial calibration, low sensitivity, and poor selectivity are indications that the alignment procedure has not been followed. Should these conditions be apparent, proceed to realign starting at the IF alignment and carefully follow each step in the order given.

VOLTAGE TABLE

"A" Battery - 3 Volt Dry Cell
"B" Battery - 3 45 Volt "B" Battery
"C" Battery - 1 22½ Volt "C" Battery

TUBE		FILAMENT	PLATE	SCREEN	GRID NO. 2	GRID NO. 3 & 5	CONTROL GRID
106	Oscillator & 1st Detector	1.9	135		135	75	3.5
34	Radio Frequency	1.9	135	75			
34	1st Intermediate Frequency	1.9	135	75			
34	2nd Intermediate Frequency	1.9	135	75			
30	2nd Detector & AVC	1.9					
30	1st Audio	1.9	60#	(Total "A" Drain 600 M.A.)			
30	Audio Driver	1.9	125	(Total "B" Drain 23 M. A. with no signal)			
30	Output	1.9	125				
30	Output	1.9	125				

Comparative voltage only. Read all voltages from socket to chassis with 1,000 ohm per volt meter. When making voltage checks use batteries that deliver full voltage with the receiver turned on.

PART NUMBER		LIST PRICE
1446	First and Second I. F. Transformer	$2.05
1413	Third I. F. Transformer	2.10
1424	Antenna Coil for 1520-535 K.C. Band	.90
1425	R. F. Coil for 1520-535 K. C. Band	.98
1426	Oscillator Coil for 1520-535 K. C. Band	.72
1427	Antenna Coil for 1.5-4.2 M. C. Band	.60
1428	Oscillator Coil for 1.5-4.2 M. C. Band	.60
1429	Antenna Coil for 4-11 M. C. Band	.77
1430	Oscillator Coil for 4-11 M. C. Band	.80
1431	Antenna Coil for 10-20 M. C. Band	.73
1432	Oscillator Coil for 10-20 M. C. Band	.72
1433	9 Cell Gtacomb Coil Shield	1.50
1439	Four Gang Four Position Wave Switch	3.10
9799	Trimmer Condenser	.15
1054	Trimmer Condenser	.55
1055	Trimmer Condenser	.55
1415	Three Gang Condenser	4.40
1453	Single Speed Dial & Drive	2.75
1505	Two Speed Planetary Drive only	1.10
1510	Dial Mechanism & glass for Two Speed Planetary Drive	2.75
1491	I. F. Filter Assembly	1.50
1448	R. F. "A" Choke	.45
9800	R. F. "B" Choke	.54
1451	Seven Conductor Battery Cable	.80
1291	4 Mfd. Wet Electrolytic Condenser	.85
1444	Resistor Strip	1.10
1414	Audio Transformer	2.20

PART NUMBER		LIST PRICE
1447	Volume Control with D.P.S.T. Switch	$1.26
1450	Tone Control	.83
9458	.00025 Mfd. Moulded Condenser	.21
1544	.0005 Mfd. Moulded Condenser	.21
9766	.03 Mfd. 400 Volt Condenser	.19
9032	.2 Mfd. 200 Volt Condenser	.23
9386	.1 Mfd. 200 Volt Condenser	.19
8961	.05 Mfd. 400 Volt Condenser	.18
6590	.002 Mfd. 400 Volt Condenser	.17
1148	.5 Mfd. 200 Volt Condenser	.44
1449	3 Meg Ohm 1/3 Watt Resistor	.19
7998	1 Meg Ohm 1/3 Watt Resistor	.19
6984	500,000 Ohm 1/3 Watt Resistor	.19
9065	1,000 Ohm 1/3 Watt Resistor	.19
1176	10,000 Ohm 1/2 Watt Resistor	.19
6-1	Voltage Regulator Tube	3.00
1420	Antenna and Ground Connector Strip	.24
1353	8" Magnetic Speaker	7.00
1508	Tuning Knob (Bottom Section)#	.30
1509	Tuning Knob (Top Section)#	.25
1500	Volume Control and Band Selector Knob with indicator line#	.30
1565	Tone Control Knob#	.27
1794	Volume and Band Selector Knob with indicator line##	.25
1740	Tuning Control Knob##	.22
1739	Tone Control Knob##	.22

For two speed planetary drive only, specify if wooden or bakelite knobs are desired.
For single speed drive only, specify if wooden or bakelite knobs are desired.

AMERICAN FOUNDATION FOR BLIND, INC.

MODEL X
MODEL U
MODEL 30
Schematics

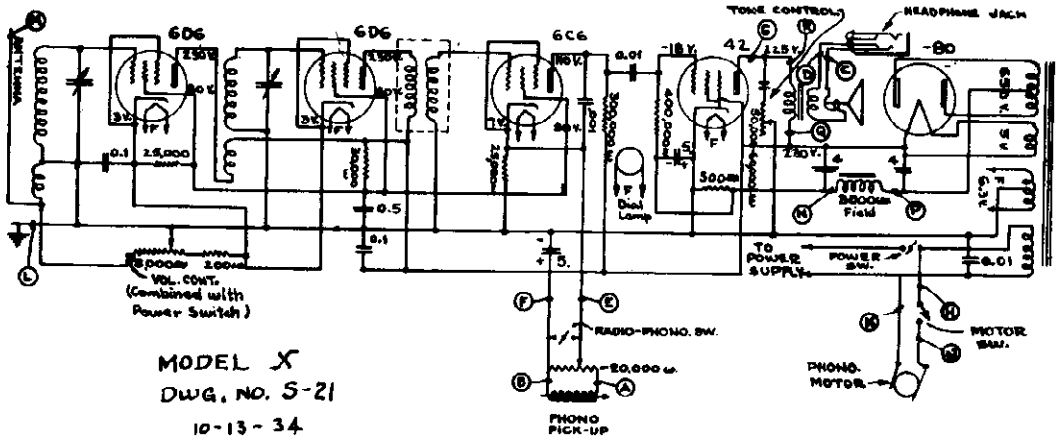

MODEL X
DWG. NO. S-21
10-13-34

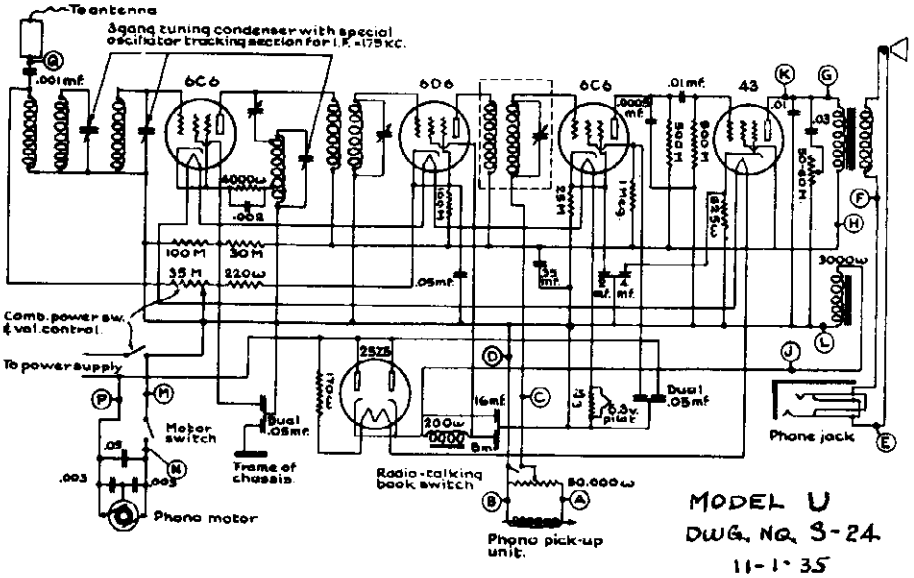

MODEL U
DWG. NO. S-24
11-1-35

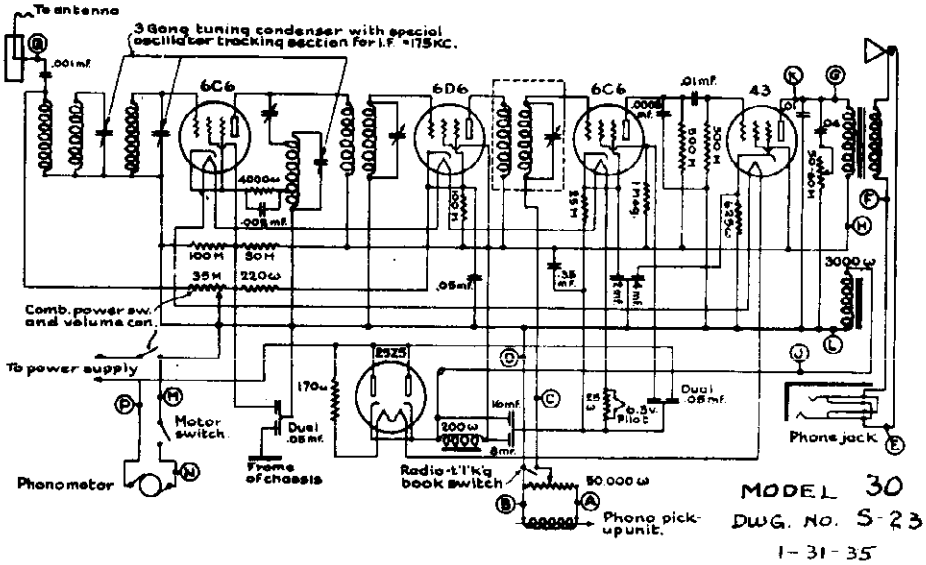

MODEL 30
DWG. NO. S-23
1-31-35

©John F. Rider, Publisher

MODEL X
MODEL U
MODEL 30
Chassis Wiring

AMERICAN FOUNDATION FOR BLIND, INC.

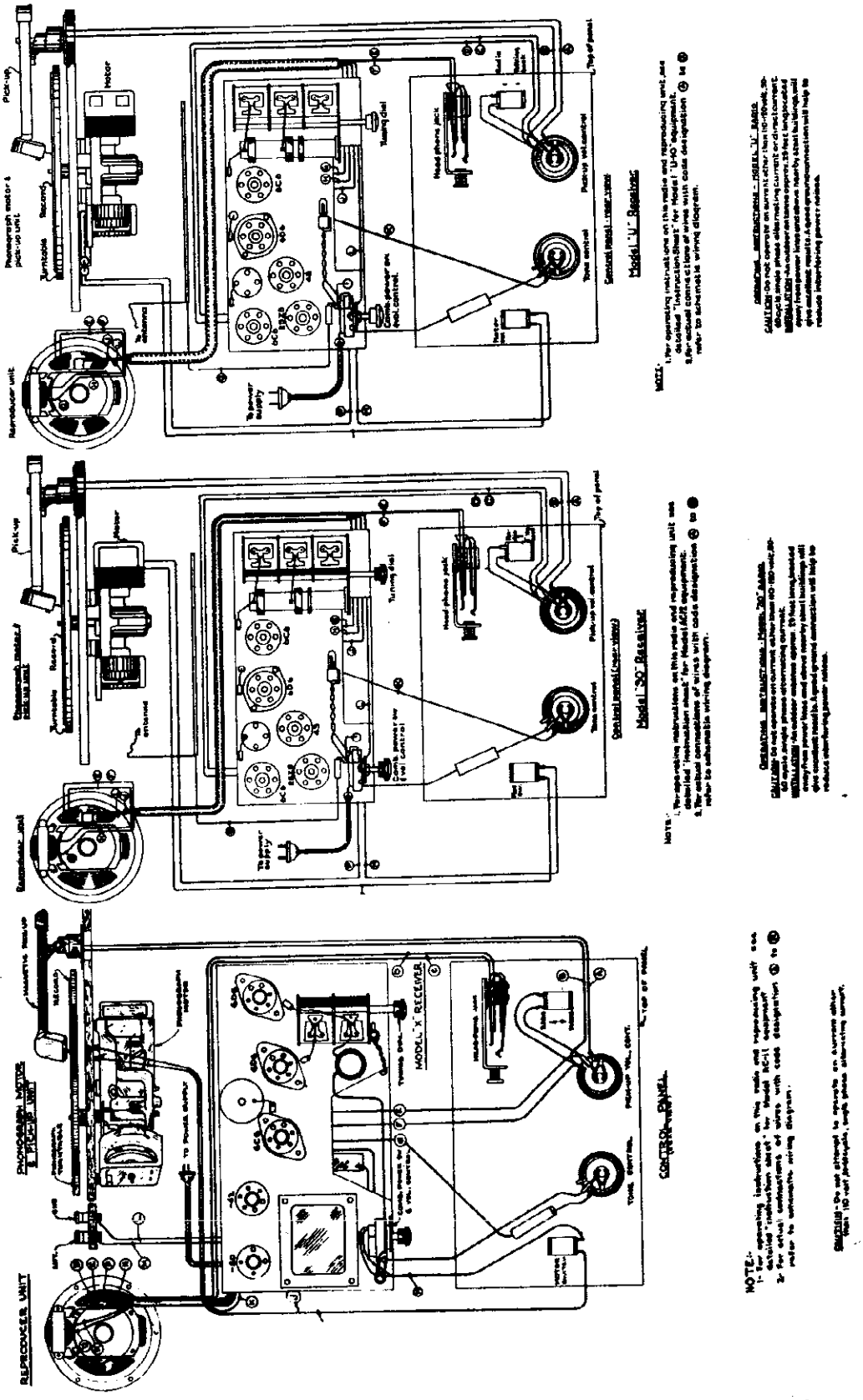

©John F. Rider, Publisher

©John F. Rider, Publisher

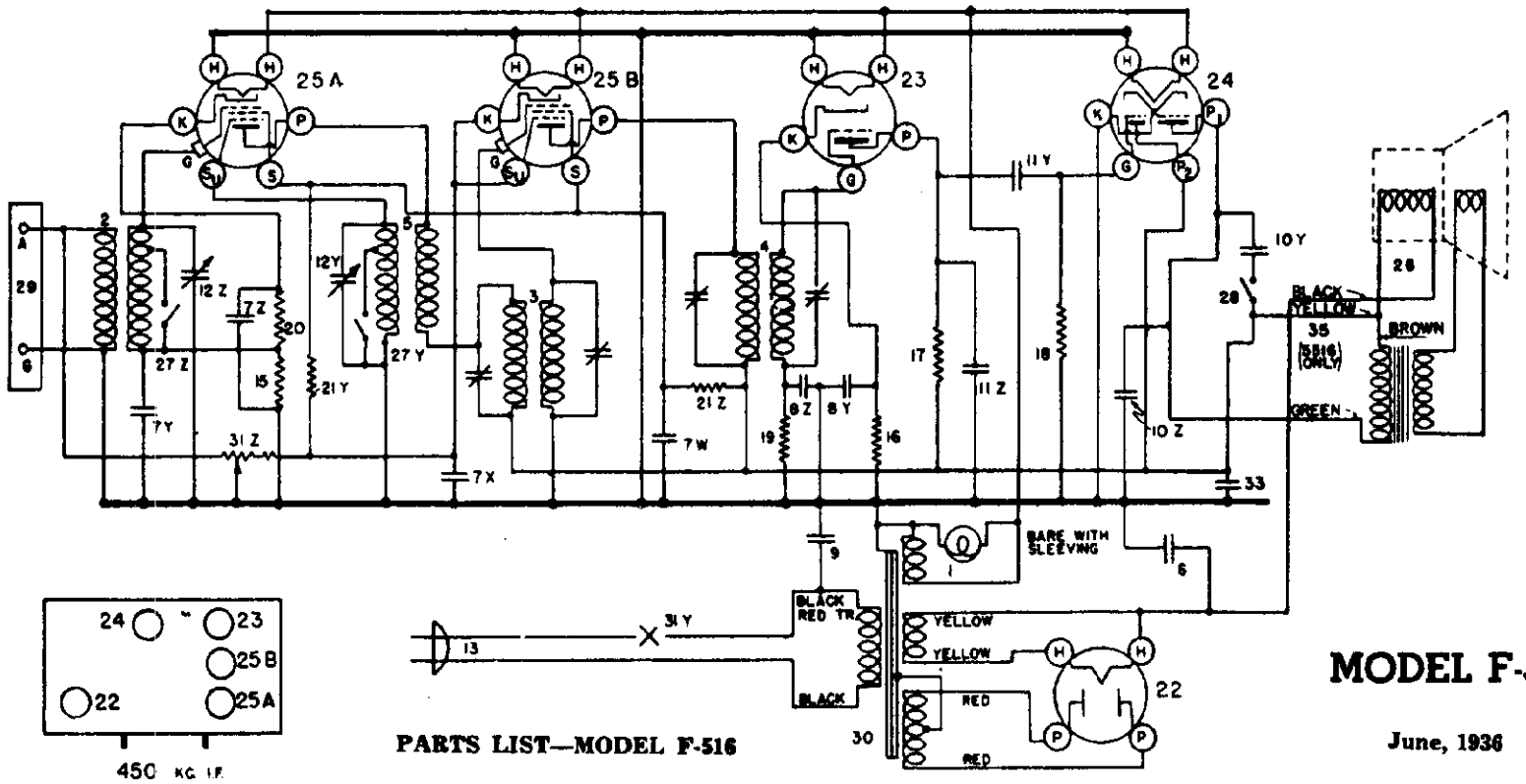

MODEL F-516

June, 1936

AMRAD CORP.

PARTS LIST—MODEL F-516

I.F. PEAK - 450 KC

ITEM No.	Part No.	Name	Description
1	W —37922	Bulb	Dial Light
	G3 —37965	Socket	Dial Light
2	G42—32000	Coil	Antenna
3	G48—32004	Coil	1st 1-F (Complete)
4	G49—32004	Coil	2nd 1-F (Complete)
5	G47—32002	Coil	Osc.
6	W —41080	Condenser	12 Mfd. 300V.
7 Z			.02 Mfd. 200V.
7 Y	W —28623	Condenser	.02 Mfd. 200V.
7 X			.02 Mfd. 200V.
7 W			.02 Mfd. 200V.
8 Z	W —28622	Condenser	.1 Mfd. 200V.
8 Y			.1 Mfd. 200V.
9	W —30805	Conednser	.01 Mfd. 400V.
10 Z	W —35011	Condenser	.006 Mfd. 400V.
10 Y			.03 Mfd. 400V.
11 Z	W —25537A	Condenser	.001 Mfd. 400V.
11 Y			.03 Mfd. 400V.
12 Z	G14—33001	Condenser	2 section Var. Tuning.
12 Y			
13	B —33906A	Cord & Plug	Power Supply
15	—31094	Resistor	4500 Ohm.
16	—21237A	Resistor	60000 Ohm. ¼ W.
17	—21455	Resistor	300,000 Ohm.
18	—23785	Resistor	500,000 Ohm.
19	—21454	Resistor	1 Megohm
20	W —25937	Resistor	275 Ohm Flex
21 Z / 21 Y	W —35963	Resistor	8500 Ohm / 25000 Ohm (Candohm)
22	G6 —28807	Socket	Type 80
23	G80—28807	Socket	Type 76
24	G90—28807	Socket	Type 6B5
25A	G75—28807	Socket	Type 6T6
25B	G75—28807	Socket	Type 6D6
26	—41469	Speaker	Type 219BL9"R"
	—41472	Cone	Speaker
	—41473	Output Trans.	Speaker
	W —37341	Knob	Control
	C —41518	Dial Glass	
	W —41737	Mtg. Brkt.	Dial Glass. RH
	W —41738	Mtg Brk.	Dial Glass. LH
	W —41821	PointerDiscassy	Dial
	B —41521	Escutcheon	Dial
	W —40570	Shield	Dial Light
27 Z / 27 Y	W —35753A	Switch	Band Selector
28	W —36184A	Switch	Tone Control
29	G1 —26719	Terminal Board	Ant. & Grd.
30	G5 —28500	Transformer	Power—110V. 60 Cy.
	G6 —28500	Transformer	Power—110V. 25 Cy.
	G7 —28500	Transformer	Power—220V. 25 Cy.
31 Z / 31 Y	—37343		Volume Control On-Off Switch
32	None		
33	W —41081	Condenser	16 Mfd. 250V.
	W	Knob	
	W —35772	Shield	Tube (Half)
	W —35773	Cap	Tube Shield
	W —35774	Base	Tube Shield
	C	Dial	Calibrated Glass
	W	Bracket	DialGlassMtg.RH
	W	Bracket	DialGlassMtg.LH
	W	Drive Unit	Dial
	MG16—40819	Bracket	Drive Mtg. Assy.
	B	Escutcheon	Dial
	D — 28	Screw	Escutcheon Mtg.

AMRAD PAGE
MODEL F-516
Schematic
Parts

©John F. Rider, Publisher

Fig. 2. Top View—Model F-516

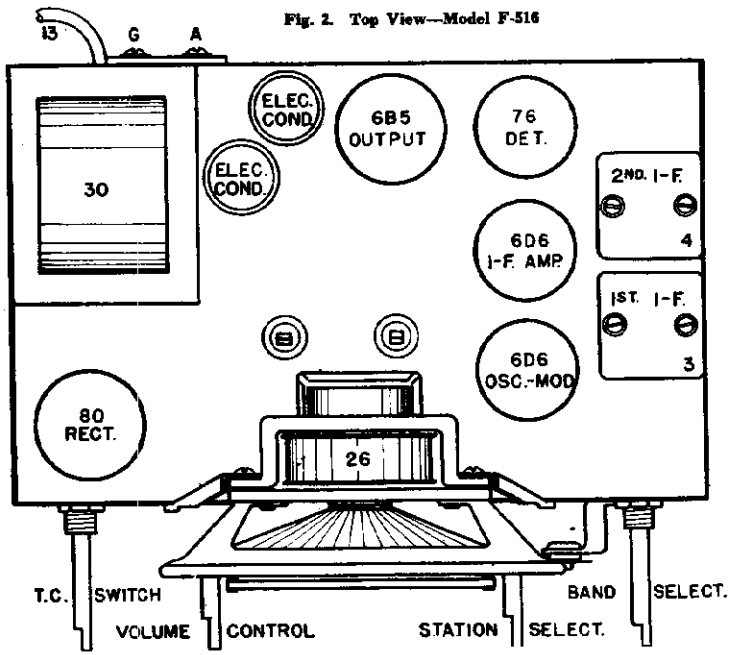

TUBE SOCKET VOLTAGE READINGS

Tube	Function	H	P	S	S2	G	P2	K
6D6	Osc-Mod.	6.3	210	120	0	28	—	31
6D6	I. F. Amp.	6.3	210	120	3	0	—	3
76	Detector	6.3	86	—	—	0	—	8.5
6B5	Output	6.3	200	—	—	0	210	0
80	Rectifier	4.9	289	—	—	—	—	—

Measured on 117.5 Volt—60 Cycle Line. Power Output Approximately 2.5 Watts.
Power Consumption Approximately 48 Watts.

Fig. 3—Bottom View—Model F-516

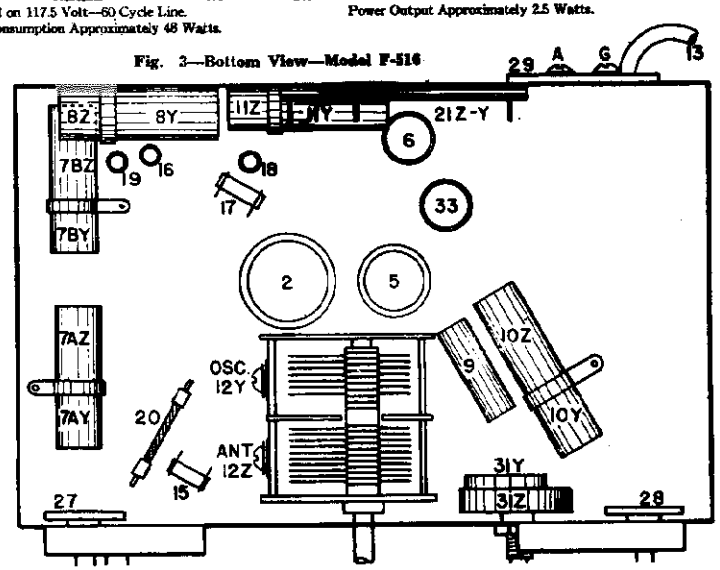

SPECIFICATIONS

This model radio is a five-tube superheterodyne receiver designed for operation on an ALTERNATING CURRENT power supply. It is available with either of the following types of power transformers: 110 volt—60 cycles, 110 volt—25 cycles or 220 volts—25 cycles.

It is a two band receiver, tuning from approximately 540 to 1570 kilocycles in the American Broadcast Band and from 1570 to 4000 kilocycles in the Police and Amateur Band.

The tubes used are 6D6 Oscillator-Modulator, 6D6 I. F. Amplifier, 76 Detector, 6B5 Output and type 80 Rectifier.

SOCKET VOLTAGES

The tube socket voltages are measured from the socket contacts to the chassis with a 1000 ohm per volt, 250 volt voltmeter (except filaments) with receiver in operating condition and no signal input. Readings may vary plus or minus 10% of values given. Filament readings are taken with a low range A. C. voltmeter.

ALIGNMENT PROCEDURE

All the circuits in this receiver are very accurately adjusted at the factory and should need no further adjustment. However, if it is definitely known that an adjustment is necessary the circuits can best be aligned with the use of a modulated signal generator and an output meter.

CONNECTING OUTPUT METER

Connect one terminal of the output meter to P1 and the other terminal to P2 of the 6B5 output tube. Looking at the bottom of the tube with the filament prongs toward you P1 will be the first prong to the left of the filaments and P2 will be next to P1. Be sure the meter is protected from D. C. by connecting a condenser (.1 mfd. or larger—not electrolytic) in series with one of the leads.

1. Tuning I-F Amplifier to 450 Kilocycles.

(a) Connect the output of the signal generator through a .02 mfd. series condenser to the top cap of the 6D6 I. F. tube, leaving the tube's grid clip in place.

KEEP THE GENERATOR LEAD AS FAR AS POSSIBLE FROM THE OTHER S. G. TUBES.

(b) Connect the ground lead of the signal generator to the chassis frame or ground terminal of the receiver.

(c) Set the signal generator to 450 kilocycles.

(d) Rotate the receiver tuning condenser until the rotor plates are completely out of mesh.

(e) Turn the band selector switch to the right hand position. (Short Wave Band).

(f) Turn the volume control of the receiver on full.

(g) With the signal generator set to the lowest usable output level adjust the I. F. trimmer condensers located on top of the 2nd I. F. transformers, Fig. 2, for maximum output.

(h) Remove the signal generator lead from the 6D6 I. F. tube and connect it to the top cap of the 6D6 Osc.-Mod. tube, leaving the tube's grid clip in place.

(i) Adjust the trimmer condensers located on top of the 1st I. F. transformer for maximum output.

DO NOT RETUNE THE 2ND I. F. TRANSFORMER.

2. Aligning R. F. Circuits.

(a) Turn the band selector switch to the left hand position. (Broadcast Band).

(b) Leave the receiver tuning condenser rotor plates completely out of mesh.

(c) Connect the output lead from the signal generator through a .00025 mfd., series condenser to the antenna terminal of the receiver.

(d) Set the signal generator to approximately 1570 kilocycles.

(e) Adjust the trimmer on the "Osc." section of the tuning condenser gang for maximum output. (Fig. 3).

(f) Set the signal generator to 1400 kilocycles.

(g) Tune in the 1400 kilocycle signal with the station selector for maximum output.

NOTE: Do not disturb the setting of the "Osc." trimmer as this is adjusted at 1570 kilocycles only and any further adjustment at this point would affect both the tuning range of the receiver and the tracking of its circuits.

(h) Adjust the trimmer on the "Ant." section of the tuning condenser gang for maximum output.

NOTE: There are no adjustments on this receiver for the Police Band.

AMRAD CORP

MODEL F-546
Schematic
Parts

FIG. 1. WIRING DIAGRAM OF MODEL F-546

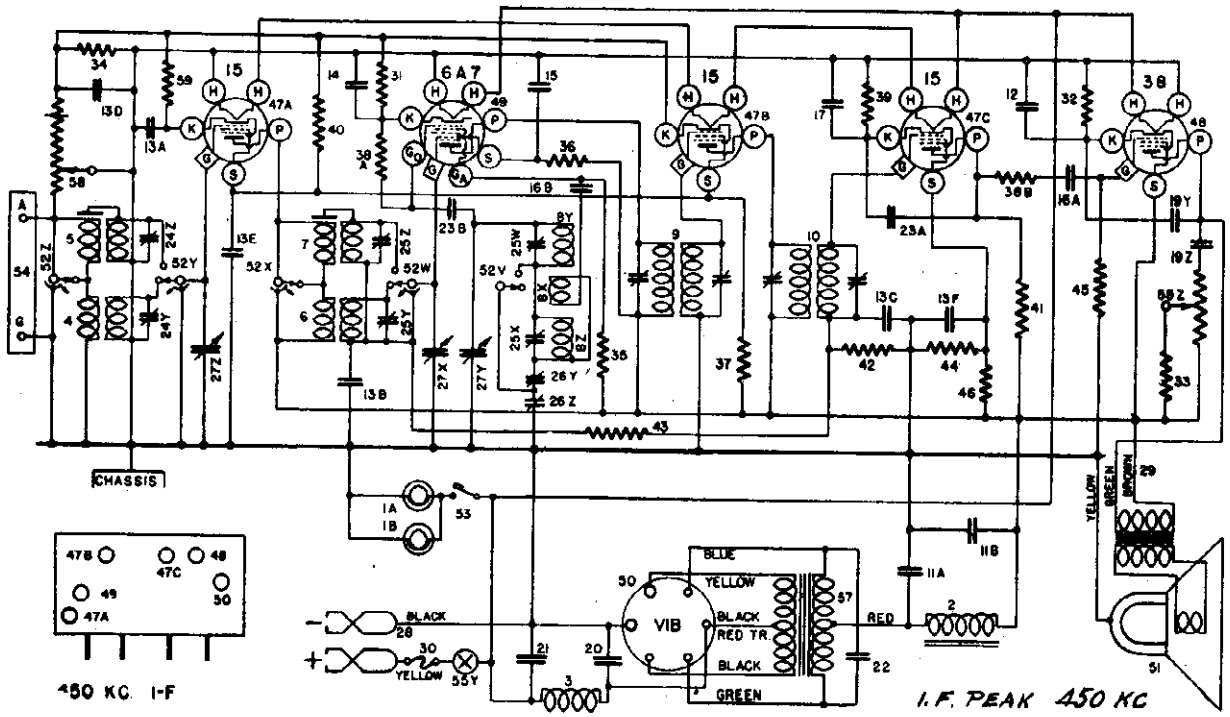

PARTS LIST—MODEL F-546

Item No.	Part No.	Description
1AB	W —37922	Dial Bulb
	G3 —37965	Dial Light Socket Assembly
2	G27 —24628	Filter Choke
3	G16 —28067	R-F Filter Choke
4	G114—32000	Ant Coil—B-C-B
5	G115—32000	Ant Coil—H-F-B
6	G81 —32001	R-F Coil—B-C-B
7	G82 —32001	R-F Coil—H-F-B
8	G104—32002	Double Osc. Coil.
9	G109—32004	1st I-F Assembly
10	G110—32004	2nd I-F Assembly
11A	W —36057	Condenser 40 Mfd. 300 V. Electrolytic
11B	W —36057	Condenser 40 Mfd. 300 V. Electrolytic
12	W —41195	Condenser 12 Mfd. 25 V. Electrolytic
13A To 13E	W —35936	Condenser .05 Mfd. 200 V.
13E	W —35936	Condenser .05 Mfd. 200 V.
14	W —32380	Condenser .05 Mfd. 200 V.
15	W —30488	Condenser .02 Mfd. 400 V.
16A	W —34647	Condenser .006 Mfd. 400 V.
16B	W —34647	Condenser .006 Mfd. 400 V.
17	W —34712	Condenser .25 Mfd. 160 V.
18	W —24049B	Condenser .1 Mfd. 200 V.
19Z, 19Y	W —25537A	Condenser .03 Mfd. 400 V. Condenser .001 Mfd. 400 V.
20	W —37174	Condenser .5 Mfd. 160 V.
21	W —37190	Condenser .02 Mfd. 160 V.
22	W —37214	Condenser .001 Mfd. 1000 V.
23A	G2 —34002	Condenser .0001 Mfd. (Molded)
23B	G2 —34002	Condenser .0001 Mfd. (Molded)
24	W —37986	2 Section Shunt Trimmer Condenser
25	W —41247	4 Section Shunt Trimmer Condenser
26	—41288	2 Section Osc. Series Trimmer
27	G23 —33001	3 Section Var. Tuning Condenser
	C —41669	Dial (Glass) Calibrated
	B —41599	Pointer Disc
	W —40486	Pointer Disc Screw
	W —41314B	Shaft Assembly (Sprocket etc.)
	B —41316	Support Bracket (Bearing)
	B —41315A	Sprocket Assembly (Driver)
	W —40909	Spring Washer (Shaft)
	W —31940A	Snap Spring (Shaft)
	W —41317A	Lower glass Support Bracket
	W —41318A	Upper glass Support Bracket R-H
	W —41319A	Upper glass Support Bracket L-H
	W —41320A	Drive Chain
	W —41743	Chain Take up Spring
28	MG25—37103	Battery Cable Assembly
29	G9 —35696	Speaker Cable
30	W —37624	Fuse (4 Amp.)
	G2 —33339	Fuse Panel Assembly
	W —33310A	Fuse Cover
	W —34223	Fuse Cover Insulator
	W — 4072	Thumb Screw (Cover)
31	W —21964	Resistor 165 Ohm ½W. Flexible
32	W —21452	Resistor 1100 Ohm ½W. Flexible
33	W —27503	Resistor 1400 Ohm ¾W. Flexible
34	W —23013	Resistor 2000 Ohm 1¼W. Flexible
35	W —37485	Resistor 15,000 Ohm ½W. Car.
36	—33390	Resistor 30,000 Ohm ¼W. Car.
37	—37472	Resistor 50,000 Ohm ¼W. Car.
38A	—21237A	Resistor 60,000 Ohm ¼W. Car.
38B	—21237A	Resistor 60,000 Ohm ¼W. Car.
39	—36761	Resistor 40,000 Ohm ¼W. INS.
40	—23403	Resistor 150,000 Ohm ¼W. Car.
41	—35930	Resistor 200,000 Ohm ¼W. INS.
42	—23785	Resistor 500,000 Ohm ¼W. Car.
43	— 21454	Resistor 1 Megohm ¼W. Car.
44	—35602	Resistor 1. Megohm ¼W. Ins.
45	—37245	Resistor 1.5 Megohm ¼W. Car.
46	—36688	Resistor 3. Megohm ¼W. Ins.
47A	G88 —28807	Socket Type 15
47B	G88 —28807	Socket Type 15
47C	G88 —28807	Socket Type 15
48	G15 —28807	Socket Type 38
49	G47 —28807	Socket Type 6A7
50	G92 —28807	Socket Type V1B.
	W — 27981A	Tube Shield Base
	W —40911	Tube Shield
51	33PJ-3	Speaker Spec. R-6000 D-1 (Table)
	—41434	Cone Assembly for Above Speaker
	—41454	Output Transformer for Above Speaker
	—41458	Mtg. Ring (Cardboard) for Above Cone
	—43-PJ-3	Speaker Spec. R-8000 B-3 (Console)
	—41452	Cone Assembly for Above Cone
	—41459	Mtg.-Ring (Cardboard) for Above Spkr
52	B —41253A	Band Selector Switch
53	W —41068A	Dial Light Switch
54	G10 —26719	Ant. & Grd. Terminal Assembly
55Z, 55Y	—32908	Tone Control On-off Switch
56	—37216	Vibrator
57	G11 —32769	Power Transformer
58	—41252	Volume Control (10,000 Ohm)
59	W —35467	Resistor 220 Ohm ½W. Flexible
	—34903	Battery clip W (+) (Pos.)
	—34904	Battery Clip W (—) (Neg.)
	B —41514	Escutcheon
	W —28760B	Escutcheon Pin
	W —41221	Upper Knob (1) } Dial Light
	W —41222	Lower Knob (1) } Station Select.
	W —41366A	Knob (1) Band Select.
	W —41224	Knob (2) V. C. & T. C

©John F. Rider, Publisher

Fig. 2. Top View—

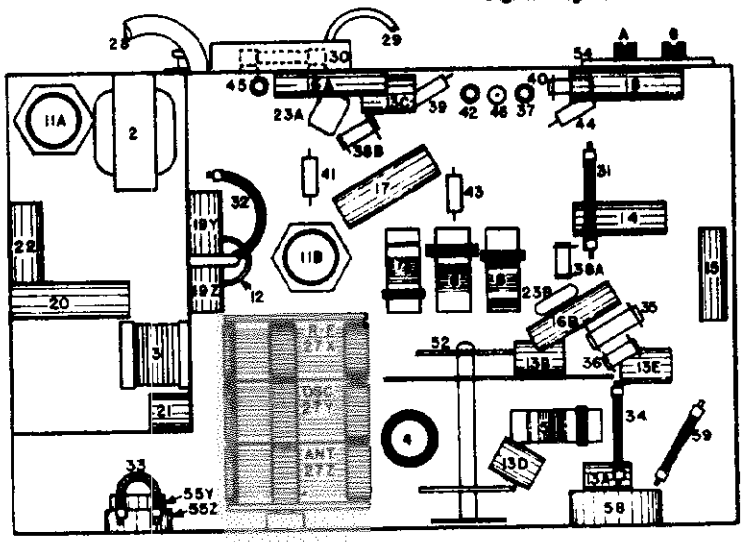

Fig. 3. Bottom View—

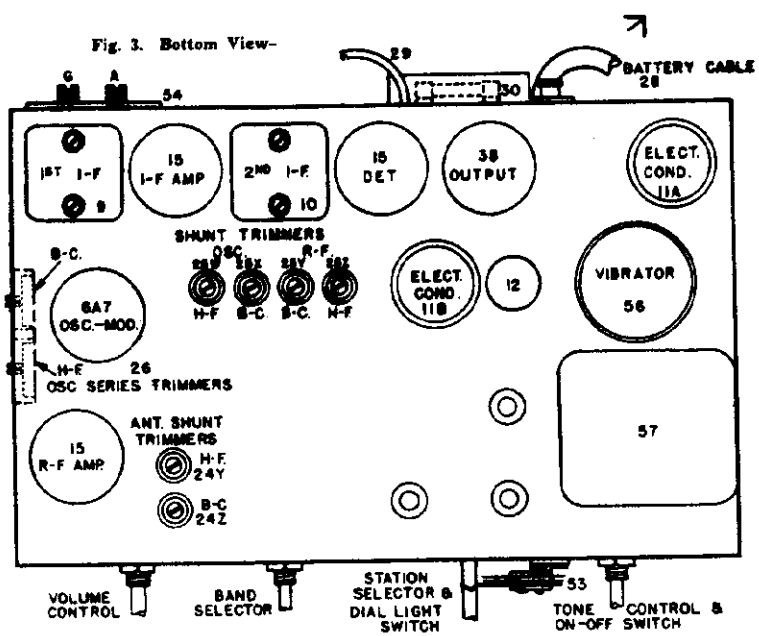

TUBE SOCKET VOLTAGE READINGS

Tube	Function	H	P	S	K	Ga	Go
15	R-F Amplifier	2.0	180	96	2.6	—	—
6A7	Oscillator-Modulator	6.0	180	84	3.8	130	Meg.
15	I-F Amplifier	2.0	180	96	2.6	—	—
15	Detector	2.0	90	13	3.8	—	—
38	Output	6.0	170	180	14.5	—	—

Power consumption approximately 2.2 amperes at 6.0 volts.
Power Output approximately .7 watt.

SPECIFICATIONS

The Amrad Model F-546 is a five-tube superheterodyne receiver designed for operation from a six-volt storage battery. It contains a completely shielded, built-in

GREEN 540-1730 Kilocycles
RED 2.3- 7.0 Megacycles

TUBES AND VOLTAGE LIMITS

The following table gives the functions of the tubes used, together with the voltage readings between the tube socket contacts and the chassis. Voltage readings should be taken with a 1000 ohm per volt, 250 volt power supply unit which employs a self-rectifying type vibrator.

The tuning range of the receiver is from 540 to 7000 kilocycles and is divided into two bands as follows:
(American Broadcast Band)
(High Frequency Band)

voltmeter (except filaments with the volume control full on and no signal input. The filament voltages should be measured with an accurate low range D-C voltmeter (approximately 0 to 10 volts). Voltage limits may vary plus or minus 10% of values given.

MODEL F-546

June, 1936

SIGNAL INPUT FREQUENCIES

		Shunt Alignment	Series Alignment
American Broadcast Band	(GREEN)	1400 Kc.	600 Kc.
High Frequency Band	(RED)	5000 Kc.	2800 Kc.

ALIGNMENT PROCEDURE

All the circuits in this receiver are very accurately adjusted at the factory and normally should need no further adjustment. However, if it is definitely known that an adjustment is necessary the circuits can best be properly aligned with the use of a modulated signal generator and an output meter.

CONNECTING OUTPUT METER

Connect one terminal of the output meter to the plate and the other terminal to the screen of the 38 Output tube. Be sure the meter is protected from D.C. by connecting a condenser (.1 mfd. or larger—not electrolytic) in series with one of the leads.

1. **Tuning I-F Amplifier to 450 Kilocycles.**

(a) Connect the output signal generator through a .02 mfd. condenser to the top cap of the 6A7 tube, leaving the tube's grid clip in place. Connect the ground lead from the signal generator to the "GND" terminal of the receiver. KEEP THE GENERATOR OUTPUT LEAD AS FAR AS POSSIBLE FROM THE GRID LEADS OF THE OTHER SCREEN GRID TUBES.

(b) Set the station selector so that the tuning condenser plates are completely out of mesh. Turn the volume control knob to the right (ON) and turn the tone control knob to the left (TREBLE).

(c) Turn the band selector switch to the right (High Frequency Band).

(d) Set the signal generator to 450 kilocycles.

(e) Adjust both trimmers located on top of the 2nd I-F transformer for maximum output.

(f) Adjust both trimmers located on top of the 1st I-F transformer for maximum output.

ALWAYS USE THE LOWEST SIGNAL GENERATOR OUTPUT THAT WILL GIVE A REASONABLE OUTPUT METER READING.

2. **Aligning R-F Amplifier.**

When aligning the R-F amplifier the output lead from the signal generator is connected to the antenna ("A-1") terminal of the receiver through a .00025 mfd. condenser.

Each band should first be shunt aligned and then series aligned. The band selector switch should be set for the band being aligned and the signal generator should be set to the frequency indicated for each adjustment.

Adjust the "OSC", "R-F" and "ANT" shunt trimmers in the order given for maximum output. Tune the station selector to the signal generator for maximum output and then check the adjustments of the "R-F" and "ANT" trimmers in the order given. Do not readjust the "OSC" trimmer. NOTE: When aligning the High Frequency Band care must be exercised so that the circuits will be aligned on the fundamental frequency rather than on the image frequency which is approximately 900 kilocycles less than the fundamental. To check on this, increase the output of the signal generator approximately ten times and try to tune-in the signal at both the generator frequency as indicated on the station selector dial and at approximately 900 kilocycles below the correct frequency. If the circuits have been properly aligned the signal can be tuned-in at both positions but much stronger at the correct position.

To adjust the "series" trimmers set the signal generator to the frequency indicated and then tune-in this signal with the station selector for maximum output. Adjust the "series" trimmer while rocking the tuning condenser back and forth slightly, until no further improvement in output can be obtained.

©John F. Rider, Publisher

MODEL F-616
Schematic
Parts

AMRAD CORP.

FIG. 1. WIRING DIAGRAM OF MODEL F-616

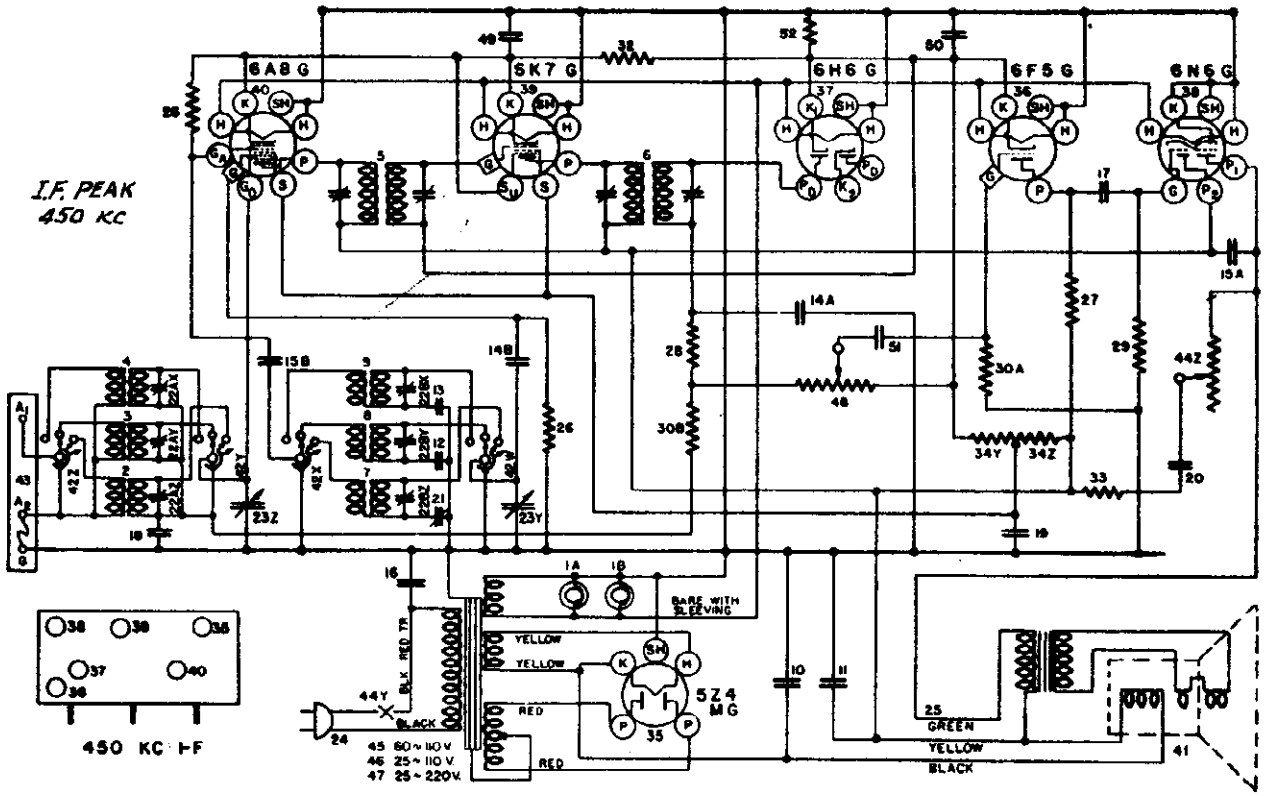

PARTS LIST—MODEL F-616

Figures in first column refer to parts in Diagrams.

Item	Part No.	Description
1A	W —37922	Bulb Dial Light
1B	W —37922	Bulb Dial Light
	G3 —37965	Dial Light Socket Assembly
2	G104 —32000	Ant. Coil B. C. B.
3	G103 —32000	Ant. Coil Pol. B.
4	G105 —32000	Ant. Coil H. F. B.
5	G99 —32004	1st 1-F Assembly
6	G100 —32004	2nd 1-F Assembly
7	G91 —32002	Osc. Coil B. C. B.
8	G92 —32002	Osc. Coil Pol. B.
9	G93 —32002	Osc. Coil H. F. B.
10	W —36055	Condenser 35 Mfd. 400 V.
11	W —36057	Condenser 40 Mfd. 300 V.
12	G7 —34007	Condenser 1750Mmfd. Pol. Osc. Series
13	G8 —34007	Condenser 4350Mmfd. H. F. Osc. Series
14A	G2 —34002	Condenser 0.0001 Mfd.
14B	G2 —34002	Condenser 0.0001 Mfd.
15A	W —35139	Condenser 0.004 Mfd. 400 V.
15B	W —35139	Condenser 0.004 Mfd. 400 V.
16	W —30805	Condenser 0.01 Mfd. 400 V.
17	W —30488	Condenser 0.02 Mfd. 400 V.
18	W —35936	Condenser 0.05 Mfd. 200 V.
19	W —24049B	Condenser 0.1 Mfd. 200 V.
20	W —22688	Condenser 0.1 Mfd. 400 V.
21	—40769	Condenser B-C Osc. Series Trimmer
22AZ to 22AX	W —35861	3 Section Ant. Shunt Trimmers
22BZ to 22BX	W —35861	3 Section Osc. Shunt Trimmers
23Z	G21 —33001	2 Section Var. Tuning Cond. Gang.
23Y		
24	B —33806A	Power Cord & Plug
25	G3 —35696	Speaker Cable
26	—40757	Resistor 50000 Ohm, ½ W.
27	—35930	Resistor 200000 Ohm, ½ W.
28	—21455	Resistor 300000 Ohm, ½ W.
29	—23785	Resistor 500000 Ohm 1 W.
30A	—36688	Resistor 3 Megohm ½ W.
30B	—36688	Resistor 3 Megohm ½ W.
31	—36952	Resistor 30,000 Ohm, 1 W.

Item	Part No.	Description
32	W —21964	Resistor 165 Ohm, ½ W.
33	W —27503	Resistor 1400 Ohm, ½ W.
34Z	W —32301	Candohm {10,000 Ohm
34Y		{15,000 Ohm
35	G166 —36400	Socket 5Z4
36	G158 —36400	Socket 6F5
37	G155 —36400	Socket 6H6
38	G165 —36400	Socket 6N6
39	G151 —36400	Socket 6K7
40	G156 —36400	Socket 6A8
	W —40911	Tube Shield
	W —27981A	Tube Shield Base
41	—40971	Speaker Spec. 332-BJ-3
42Z to 42W	—40770	Band Selector Switch
43	G27 —26719	Ant & Grd. Terminal Board
44Z	—37908	Tone Control (100,000 Ohm)
44Y		On-Off Switch
45	G12 —28500	Power Transformer 60 Cy. 110 V.
46	G13 —28500	Power Transformer 25 Cy. 110 V.
47	G14 —28500	Power Transformer 25 Cy. 220 V.
48	—37967	Volume Control (1 Meg.)
49	W —29910A	Condenser 0.25 Mfd. 200 V.
50	W —28621	Condenser 0.02 Mfd. 200 V.
51	W —35758	Condenser 0.008 Mfd. 400 V.
52	W —25357	Resistor 75 Ohms, ½ W.
	MG27 —41510	Dial Drive Assembly Complete
	—41597	Drive Unit only
	C —41540	Glass Dial, Calibrated
	—41596	Pointer Disc
	—41582	Drive Cable
	—41584	Drive Coupling Unit
	—41587	Pointer Mtg. Screw
	B —41929	Escutcheon
	D — 30	Escutcheon Mtg. Screw
	W —37339	Knob (3)
	W —40192B	Knob (1)
	W 36117	Rubber Mtg. Foot

©John F. Rider, Publisher

©John F. Rider, Publisher

MODEL F-616

June, 1936

Fig. 2 Top View—

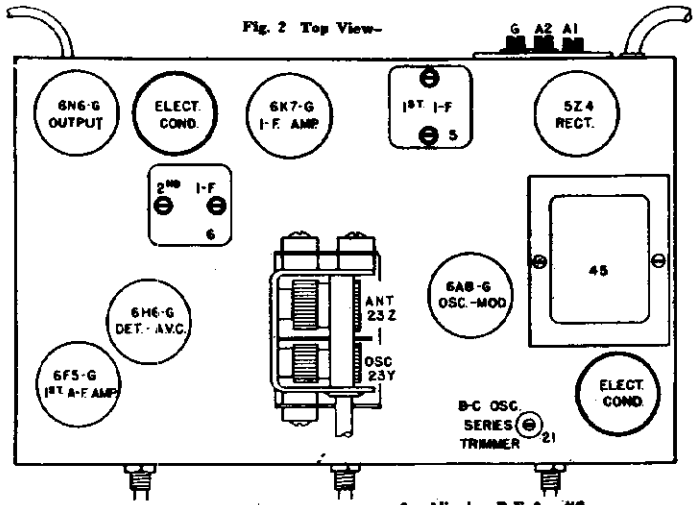

Fig. 3. Bottom View—

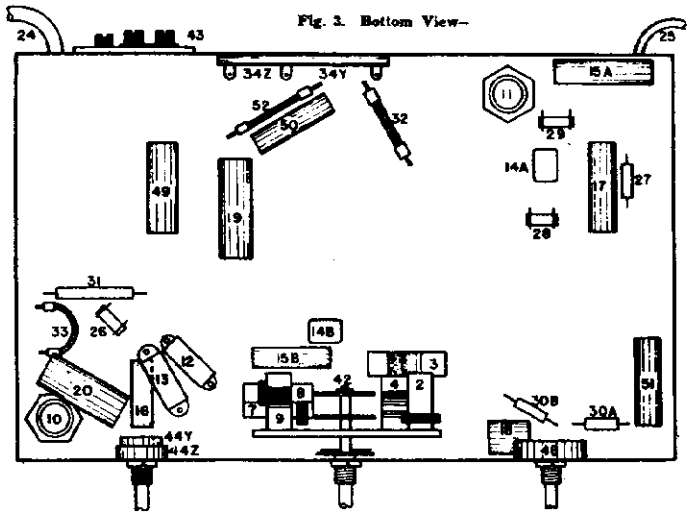

ALIGNMENT PROCEDURE

All the circuits in this receiver are very accurately adjusted at the factory and normally should need no further adjustment. However, if it is definitely known that an adjustment is necessary the circuits can best be properly aligned with the use of a modulated signal generator and an output meter.

CONNECTING OUTPUT METER

Connect the output meter to the two plates of the 6N6 Output Tube. Be sure the meter is protected from D.C. by connecting a condenser (.1 mfd. or larger—not electrolytic) in series with one of the leads.

1. Tuning I-F Amplifier to 450 Kilocycles.

(a) Connect the output of the signal generator through a .02 mfd. condenser to the top cap of the 6A8 tube, leaving the tube's grid clip in place. Connect the ground lead from the signal generator to the "GND" terminal of the receiver. KEEP THE GENERATOR LEADS AS FAR AS POSSIBLE FROM THE GRID LEADS OF THE OTHER SCREEN GRID TUBES.

(b) Set the station selector so that the tuning condenser plates are completely out of mesh. Turn the volume control knob to the right (ON) and turn the tone control knob to the left (TREBLE).

(c) Turn the band selector switch to the High Frequency Band.

(d) Set the signal generator to 450 kilocycles.

(e) Adjust both trimmers located on top of the 2nd I-F Transformer for maximum output.

(f) Adjust both trimmers located on top of the 1st I-F Transformer for maximum output.

(g) Check operations (e) and (f) for more accurate adjustments.

ALWAYS USE THE LOWEST SIGNAL GENERATOR OUTPUT THAT WILL GIVE A REASONABLE OUTPUT METER READING.

2. Aligning R-F Amplifier.

When aligning the R-F Amplifier the output lead of the signal generator is connected to the "ANT" terminal of the receiver. For the GREEN and WHITE bands a .00025 mfd. condenser must be connected in series with the output lead of the signal generator and for the high-frequency band a 400 ohm carbon resistor should be used in place of the condenser.

Each band should first be shunt aligned and then series aligned, where provision is made for series alignment (GREEN band). The band selector switch should be set for the band being aligned and the station selector and signal generator should be set to the frequency indicated (c) for each adjustment.

(a) Adjust the "Osc." and "ANT" shunt trimmers in the order given for maximum output. Readjust the station selector slightly so that the generator signal is tuned-in with maximum output and then check the adjustments of the "ANT" trimmers. DO NOT READJUST the "OSC" TRIMMER.

NOTE: When shunt aligning the WHITE and RED bands care must be exercised so that the circuits will be aligned on the correct frequency rather than on the image frequency which is approximately 900 kilocycles less than the fundamental. To check on this, increase the output of the signal generator ten times, or more, and try to tune-in the signal both at the generator frequency as indicated on the station selector dial and at approximately 900 kilocycles less than the correct frequency. If the circuits have been properly aligned the signal can be tuned-in at both positions but much stronger at the correct position.

(b) To align the series trimmer (Item 21, Fig. 2) set the signal generator to the frequency indicated (c) and then tune-in this signal with the station selector for maximum output. To obtain the best adjustment for the series trimmer it will be necessary to rotate the station selector back and forth slightly while adjusting the trimmer for maximum output.

(c) Signal Input Frequencies:

	Shunt Alignment	Series Alignment
American Broadcast Band (GREEN)	1700 Kilocycles	600 Kilocycles
Police Band (WHITE)	6000 Kilocycles	.....
High-Frequency Band (RED)	18000 Kilocycles	.....

SPECIFICATIONS

The Amrad Radio Model F-616 is a six-tube superheterodyne receiver designed to operate on an ALTERNATING CURRENT power supply. It is designed to use either metal tubes or the equivalent glass tubes with octal bases. If glass tubes are replaced with metal tubes or metal tubes are replaced with glass tubes it will be necessary to completely realign the circuits of the receiver.

It is a three band receiver and the dial is divided into three sections as follows:

GREEN	540-1800 Kilocycles	(American Broadcast Band)
WHITE	1.8- 6.6 Megacycles	(Police and Amateurs)
RED	6.6- 18.0 Megacycles	(High Frequency Bands)

SOCKET VOLTAGES

The tube socket voltages are measured from the tube socket contacts to the chassis with a 1000 ohm per volt, 500 volt D.C. voltmeter (except filaments) with the receiver in operating condition and no signal input. The filament voltages should be measured with an accurate low range A-C voltmeter (Approximately 0-10 volts). Readings may vary plus or minus 10% of values given.

TUBE SOCKET VOLTAGE READINGS

Tube	Function	H	P	P_1	S	S_2	G	K	Go	Ga
6A8-G	Osc.-Modulator	6.3	240	—	95	—	0	4.5	-5 to -30	115
6K7-G	I-F Amplifier	6.3	240	—	95	4.5	0	4.5	—	—
6H6-G	Diode Detector	6.3	0	—	—	—	0	—	—	—
6F5-G	A-F Amplifier	6.3	150	—	—	—	0	1.5	—	—
6N6-G	Output	6.3	220	240	—	—	0	0	—	—
5Z4-MG	Rectifier	4.9	310	—	—	—	—	—	—	—

MEASURED ON 117.5 VOLT—60 CYCLE POWER SUPPLY.
POWER CONSUMPTION APPROXIMATELY 80 WATTS.
POWER OUTPUT APPROXIMATELY 4 WATTS.

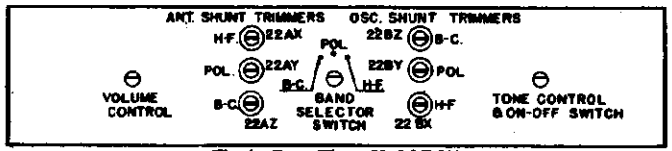

Fig. 4. Front View—Model F-616

AMRAD CORP.

MODEL F-626
Schematic
Parts

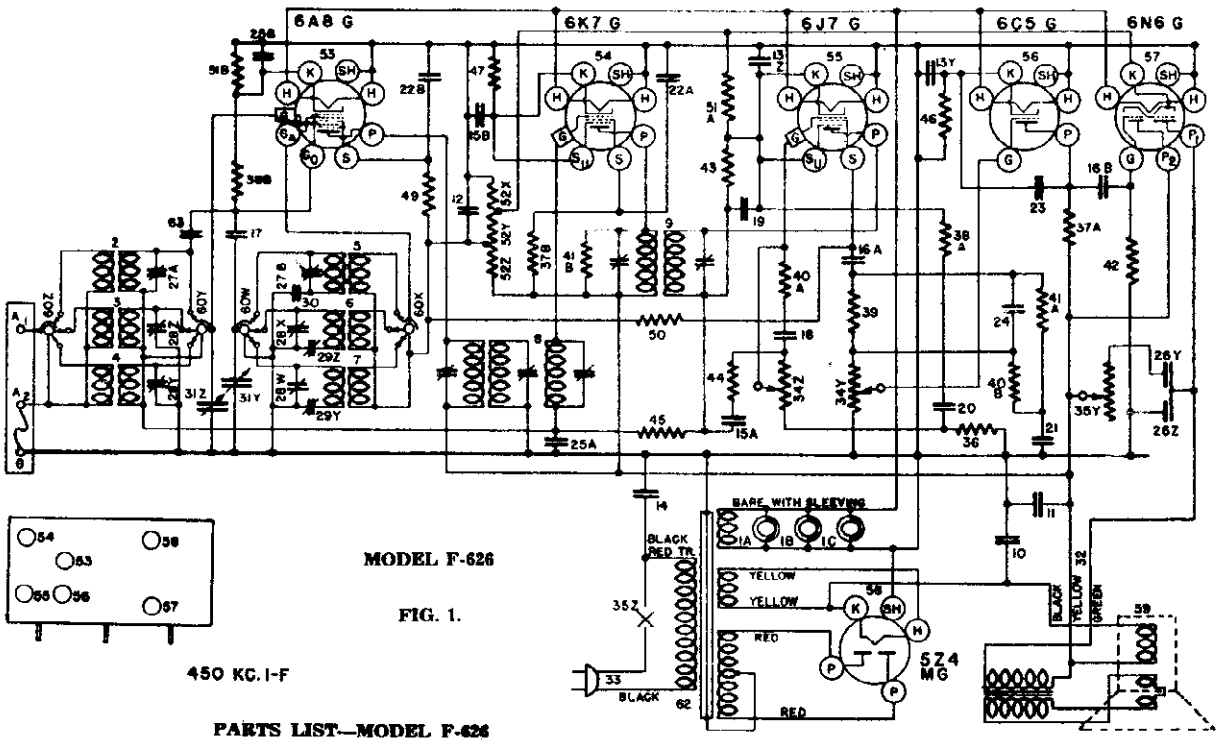

MODEL F-626

FIG. 1.

PARTS LIST—MODEL F-626

Item No.	Part No.	Description
1A	W —37922	Bulb, Dial Light
1A	W —37922	Bulb, Dial Light
1B	W —37922	Bulb, Dial Light
1C	W —37922	Bulb, Indicator Light
2	G92 —32000	Coil, Ant. 6000-18000 Kc.
3	G90 —32000	Coil, Ant. 1800-6000 Kc.
4	G91 —32000	Coil, Ant. 540-1800 Kc.
5	G84 —32002	Coil, Osc. 6000-18000 Kc.
6	G83 —32002	Coil, Osc. 1800-6000 Kc.
7	G82 —32002	Coil, Osc. 540-1800 Kc.
8	G101—32004	Coil, 1st I-F Assm.
9	G102—32004	Coil, 2nd I-F Assm.
10	W —36055	Condenser, .35 mfd., 400 V.
11	W —36057	Condenser, .40 mfd., 300 V.
12	W —40325	Condenser, 50 mfd., 150 V.
13Z	W —37778	Condenser, 12 mfd., 25 V.
13Y		Condenser, 12 mfd., 25 V.
14	W —30805	Condenser, 0.1 mfd., 400 V.
15A	W 36541	Condenser, .02 mfd., 160 V.
15B	W —36541	Condenser, .02 mfd., 160 V.
16A	W —32780B	Condenser, .05 mfd., 400 V.
16B	W —32780B	Condenser, .05 mfd., 400 V.
17	G1 —34002	Condenser, .00025 mfd., (molded)
18	G6 —34002	Condenser, .000025 mfd., (molded)
19	G2 —34002	Condenser, .0001 mfd., (molded)
20	W —30323	Condenser, .01 mfd., 200 V.
21	W —37988	Condenser, .017 mfd., 200 V.
22A	W —23142	Condenser, .02 mfd., 400 V.
22B		Condenser, .02 mfd., 400 V.
23	W —27540	Condenser, .0005 mfd., 400 V.
24	G5 —34002	Condenser, .00005 mfd., (molded)
25A	W 35936	Condenser, .05 mfd., 200 V.
25B	W —35936	Condenser, .05 mfd., 200 V.
26Z	W —31052	Condenser, .004 mfd., 400 V.
26Y		Condenser, .05 mfd., 400 V.
27A	W —37954	Condenser, H-F Ant. Shunt Trim.
27B	W —37954	Condenser, H-F Ant. Shunt Trim.
28Z		Condenser, Pol. Ant. Shunt Trim.
28Y	W —37822A	Condenser, B-C Ant. Shunt Trim.
28X		Condenser, Pol. Osc. Shunt Trim.
28W		Condenser, B-C Osc. Shunt Trim.
29Z	G31 —33006	Condenser, Pol. Osc. Series Trim.
29Y		Condenser, B-C Osc. Series Trim.
30	G17 —34000	Condenser, .0053 mfd. H-F Osc.
31Z	G19 —33001	Condenser, Var. Tuning Gang
31Y		
32	G4 —35696	Cable, Speaker
33	B —33906A	Cable & Plug, Power Supply
34Z	—37907	Vol. Cont., 1st A-F Control, 3 Meg.
34Y		2nd A-F Control, 1 Meg.
35Y	37908	Control, Tone
35Z		Switch, On-Off
36	—21455	Resistor, 300,000 Ohm, ½ W.
37A	— 5469A	Resistor, 100,000 Ohm, 1 W.
37B	— 5469A	Resistor, 100,000 Ohm, 1 W.
38A	—36761	Resistor, 40,000 Ohm, ¼ W., Insul.
38B	—36761	Resistor, 40,000 Ohm, ¼ W., Insul.
39	—21454	Resistor, 1 Megohm, ½ W.
40A	—34020	Resistor, 250,000 Ohm, ½ W.
40B	—34020	Resistor, 250,000 Ohm, ½ W.
41A	—37590	Resistor, 750,000 Ohm, ½ W.
41B	—37590	Resistor, 750,000 Ohm, ½ a.
42	—36322	Resistor, 500,000 Ohm, ½ W.
43	—33344	Resistor, 400,000 Ohm, ½ W.
44	—23402	Resistor, 150,000 Ohm, ½ W.
45	—37245	Resistor, 1.5 Megohm, ½ W.
46	—21876	Resistor, 10,000 Ohm, ½ W.
47	W —22514	Resistor, 750 Ohm, ½ W., Flex.
49	—22831	Resistor, 15,000 Ohm, ½ W.
50	—21875	Resistor, 100,000 Ohm, ½ W.
51A	W —28106	Resistor, 500 Ohm, ½ W. Flex.
51B	W —28106	Resistor, 500 Ohm, ½ W. Flex.
52Z		Resistor, 10,000 Ohm
52Y	—37829A	Resistor, 25,000 Ohm (Candohm)
52X		Resistor, 60 Ohm
53	G156—36400	Socket 6A8
54	G151—36400	Socket 6K7
55	G157—36400	Socket 6J7
56	G152—36400	Socket 6C5
57	G165—36400	Socket 6N6
58	G154—36400	Socket 5Z4
59	532-CJ-3"M"	Speaker Special 1-D-235
	—40400	Cone Assembly for 532-CJ-3"M"
	—40406	Field Coil for 532-CJ-3"M"
	—40412	Output Trans. for 532-CJ-3"M"
60	B —37906D	Switch, 2 Sec. Band Selector
61	G27 —26719	Terminal Board, Ant. & Grand.
62	G15 —28500	Transformer, Power 110-60 Cy.
	G16 —28500	Transformer, Power 110-25 Cy.
	G17 —28500	Transformer, Power 220-25 Cy.
	W 27981A	Base, Tube Shield
	—40531	Belt, Drive
	W —22334	Cable, Indicator Control
	—40537	Coupling, Flexible Drive
	MG39—41522	Dial Assembly Complete
	W —41532	Escutcheon, Cabinet
	—41525	Face, Calibrated Glass Dial
	—42063	Gasket, Escutcheon Felt
	W —42056	Hand, Long
	W —42057	Hand, Short
	W —37339	Knob, 3 required
	W —40192B	Knob, 1 required
	B —41232	Lens, Dial
	W —37909	Pulley, Indicator Cable
	W —40911	Shield, Tube
	W —40570	Shield, Dial Light
	G3 —37965	Socket, Indicator & Dial Light
	—41696	Spring, Dial Lens Retaining
	—42062	Paper Backing for Dial
	W —40486	Hand Mtg. Screw
	D — 30	Escutcheon Mtg. Screw

©John F. Rider, Publisher

©John F. Rider, Publisher

MODEL F-626
Socket, Trimmer
Voltage, Alignment

AMRAD CORP.

Fig. 2. Top View—

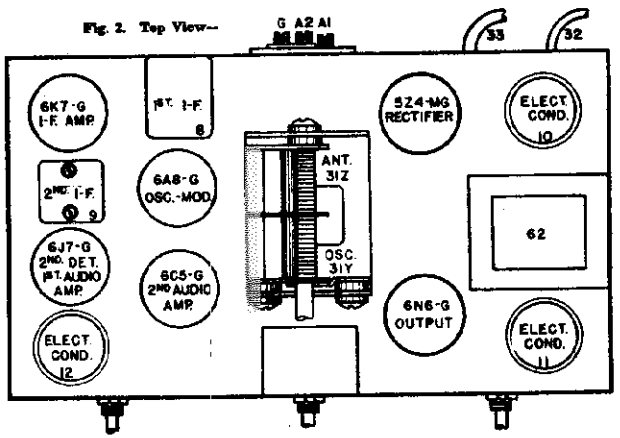

Fig. 3. Bottom View—

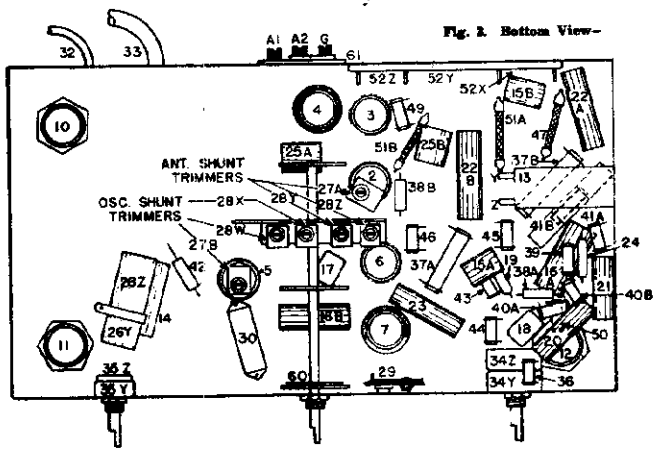

Fig. 4. Front View—

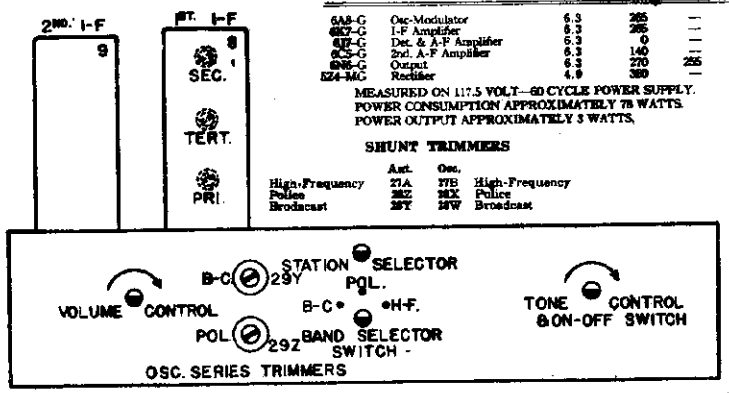

TUBE SOCKET VOLTAGE READINGS

Tube	Function	H	P	P_1	S	S_2	G	K	G_2	G_1
6A8-G	Osc-Modulator	6.3	265	—	100	—	0	5.0	0	140
6K7-G	I-F Amplifier	6.3	265	—	120	6.2	0	6.2	—	—
6J7-G	Det. & A-F Amplifier	6.3	0	—	75	2.6	0	2.6	—	—
6C5-G	2nd. A-F Amplifier	6.3	140	—	—	—	0	10.0	—	—
6N6-G	Output	6.3	270	255	—	—	0	2.3	—	—
5Z4-MG	Rectifier	4.9	380	—	—	—	—	—	—	—

MEASURED ON 117.5 VOLT—60 CYCLE POWER SUPPLY.
POWER CONSUMPTION APPROXIMATELY 75 WATTS.
POWER OUTPUT APPROXIMATELY 3 WATTS.

SHUNT TRIMMERS

	Ant.	Osc.	
High-Frequency	27A	27B	High-Frequency
Police	28Z	28X	Police
Broadcast	28Y	28W	Broadcast

MODEL F-626

June, 1936

SPECIFICATIONS

The Amrad Model F-626 radio is a six-tube superheterodyne receiver designed to operate on an ALTERNATING CURRENT power supply. It is available with either of the following types of power transformers: 110 volt—60 cycles, 110 volt—25 cycles or 220 volts—25 cycles.

GREEN	540- 1800 Kilocycles	(American Broadcast Band)
WHITE	1800- 5000 Kilocycles	(Police and Amateurs)
RED	5800-18500 Kilocycles	(High Frequency Band)

SOCKET VOLTAGES

The tube socket voltages are measured from the tube socket contacts to the chassis with a 1000 ohm per volt, 500 volt D.C. voltmeter (except filaments) with the receiver in operating condition and no signal input. The filament voltages should be measured with an accurate low range A.C. voltmeter (Approximately 0-10 volts). Reading may vary plus or minus 10% of values given.

This receiver is designed to use either metal tubes or the equivalent glass tubes with octal bases. If glass tubes are replaced with metal tubes or metal tubes are replaced with glass tubes it will be necessary to completely realign the circuits of the receiver.

It is a three band receiver and the dial is divided into three sections as follows:

ALIGNMENT PROCEDURE

All the circuits in this receiver are very accurately adjusted at the factory and normally should need no further adjustment. If it is definitely known that readjustment is necessary the circuits may be most accurately aligned with the aid of an oscilloscope. However, if an oscilloscope is not available a good alignment may be obtained by means of a signal generator and an output meter provided the following procedure is carefully observed.

CONNECTING OUTPUT METER

Connect the two terminals of the output meter to the two plates of the 6N6 Ouput tube. Be sure the meter is protected from D.C. by connecting a condenser (.1 mfd. or larger not electrolytic) in series with one of the leads.

1. Tuning I-F Amplifier to 450 Kilocycles.

(a) Connect the output of the signal generator through a .02 mfd. condenser to the top cap of the 6K7 I-F Amplifier tube, leaving the tube's grid clip in place. Connect the ground lead from the signal generator to the receiver chassis. KEEP THE GENERATOR OUTPUT LEAD AS FAR AS POSSIBLE FROM THE GRID LEADS OF THE OTHER SCREEN GRID TUBES.

(b) Turn the band selector switch to the Broadcast Band and rotate the station selector to approximately 60 on the dial. Turn the volume knob to the right (ON) and turn the tone control knob to the left (TREBLE).

(c) Set the signal generator to 450 kilocycles.

(d) Adjust the trimmer condensers located on top of the 2nd I-F transformer for maximum output (Fig. 2).

ALWAYS USE THE LOWEST SIGNAL GENERATOR OUTPUT THAT WILL GIVE A REASONABLE OUTPUT METER READING.

(e) Transfer the output lead of the signal generator from the 6K7 tube to the top cap of the 6A8 Oscillator-Modulator tube, leaving the tube's grid clip in place.

(f) Close the middle trimmer (Terr. Fig. 4) on the 1st I-F transformer so that it is moderately tight. (Do not force adjusting screw).

(g) Adjust the top trimmer on the 1st I-F transformer for maximum output.

(h) Adjust the bottom trimmer on the 1st I-F transformer for maximum output.

(i) Transfer the signal generator output lead from the 6A8 tube to the "Ant" terminal of the receiver and increase the output of the signal generator if necessary.

(j) Check the adjustment of the bottom trimmer of the 1st I-F transformer. DO NOT READJUST THE TOP TRIMMER.

(k) Adjust the middle trimmer of the 1st I-F transformer by opening condenser until maximum output is obtained. DO NOT READJUST THE TOP AND BOTTOM TRIMMERS.

2. Aligning R-F Amplifier.

When aligning the R-F Amplifier the output lead of the signal generator is connected to the "ANT" terminal of the receiver. For the GREEN and WHITE bands a .00025 mfd. condenser must be connected in series with the output lead of the signal generator and for the high-frequency band a 400 ohm carbon resistor should be used in place of the condenser.

Each band should first be shunt aligned and then series aligned where provision is made for series alignment (GREEN and WHITE bands). The band selector switch should be set for the band being aligned and the station selector and signal generator should be set to the frequency indicated (c) for each adjustment.

(a) Adjust the "OSC" and "ANT" shunt trimmers in the order given for maximum output. Readjust the station selector slightly so that the generator signal is tuned-in with maximum output and then check the adjustments of the "ANT" trimmers. DO NOT READJUST the "OSC" TRIMMER.

NOTE: When shunt aligning the WHITE and RED bands care must be exercised so that the circuits will be aligned on the correct frequency rather than on the image frequency which is approximately 900 kilocycles less than the fundamental. To check on this, increase the output of the signal generator ten times or more and try to tune-in the signal both at the generator frequency as indicated on the station selector dial and at approximately 900 kilocycles less than the correct frequency. If the circuits have been properly aligned the signal can be tuned-in at both positions but much stronger at the correct position.

(b) To align the series trimmers (29Y-29Z Fig. 4) set the signal generator to the frequency indicated (c) and then tune-in this signal with the station selector for maximum ouput. To obtain the best adjustment for each series trimmer it will be necessary to rotate the station selector back and forth slightly while adjusting the trimmer for maximum output.

(c) Signal Input Frequencies:

	Shunt Alignment	Series Alignment
American Broadcast Band (GREEN)	1700 Kilocycles	600 Kilocycles
Police Band (WHITE)	6000 Kilocycles	2500 Kilocycles
High-Frequency Band (RED)	18000 Kilocycles	.....

ANSLEY RADIO LABORATORIES

MODEL B-1
Early, Late
Schematics

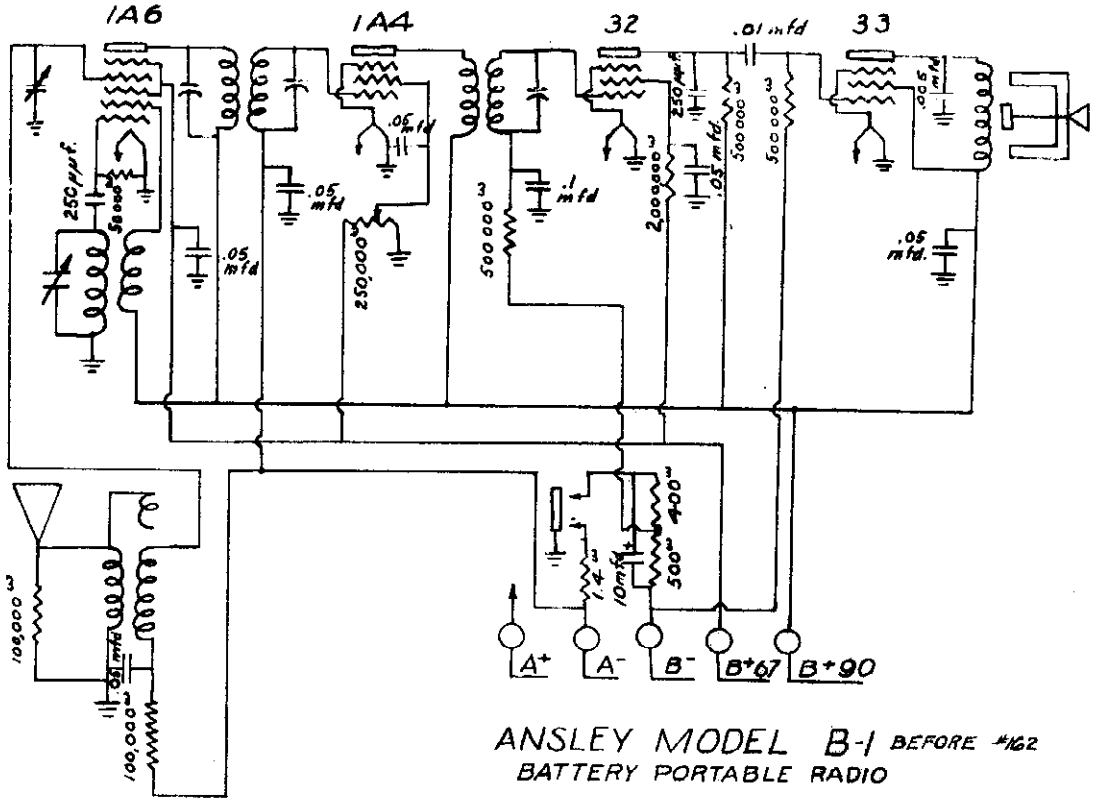

ANSLEY MODEL B-1 BEFORE #162
BATTERY PORTABLE RADIO

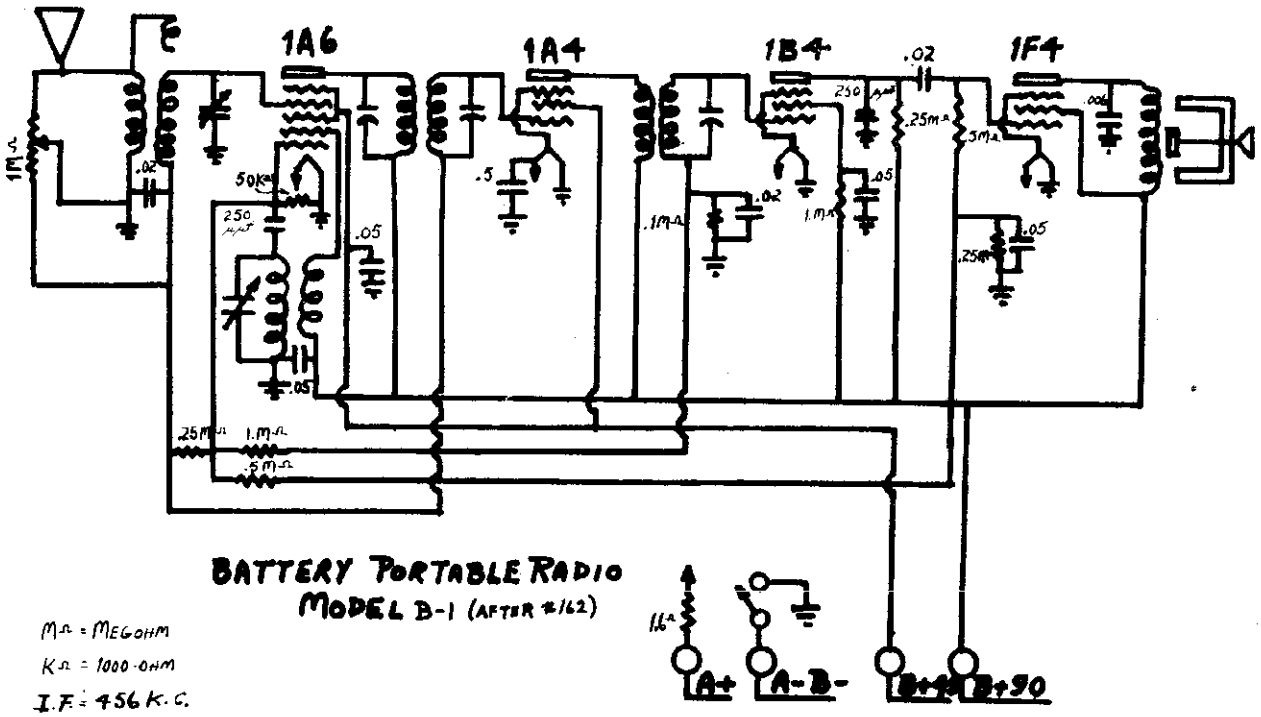

BATTERY PORTABLE RADIO
MODEL B-1 (AFTER #162)

MΩ = MEGOHM
KΩ = 1000 OHM
I.F. = 456 K.C.

©John F. Rider, Publisher

MODEL D-1
MODEL D-12
Dynaphones
Schematics

ANSLEY RADIO LABORATORIES

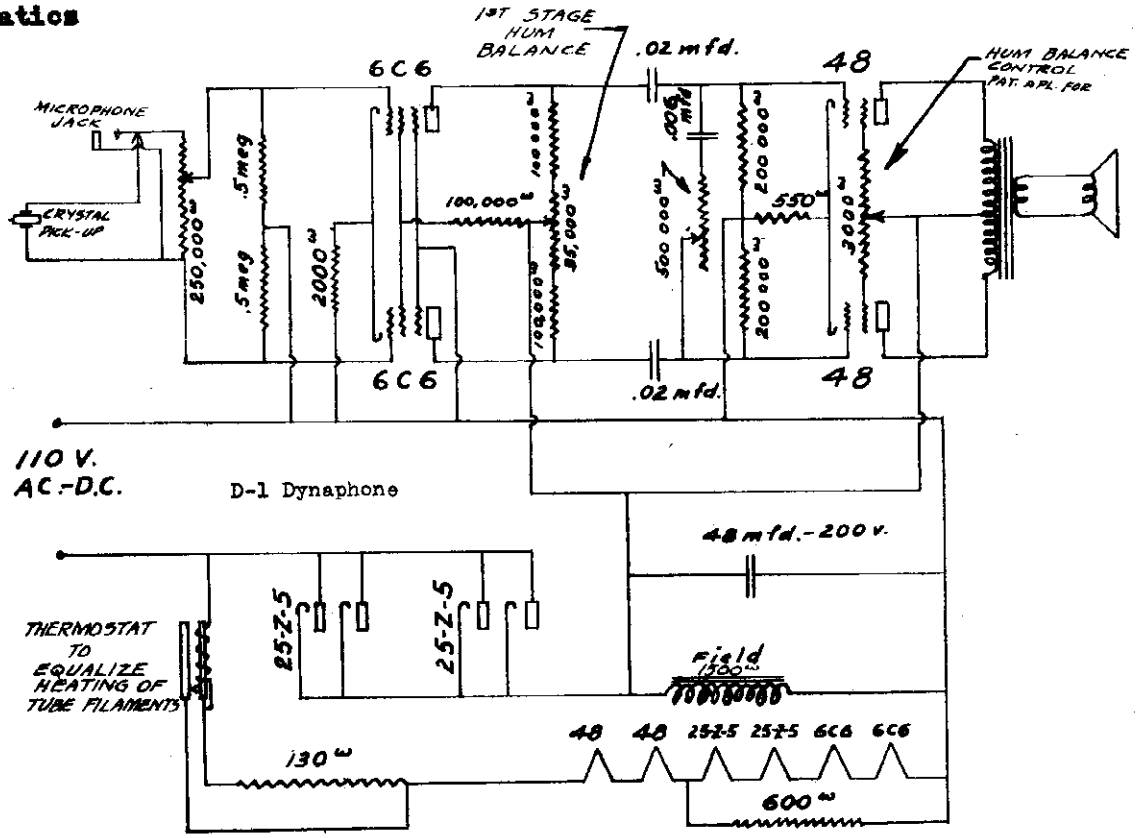

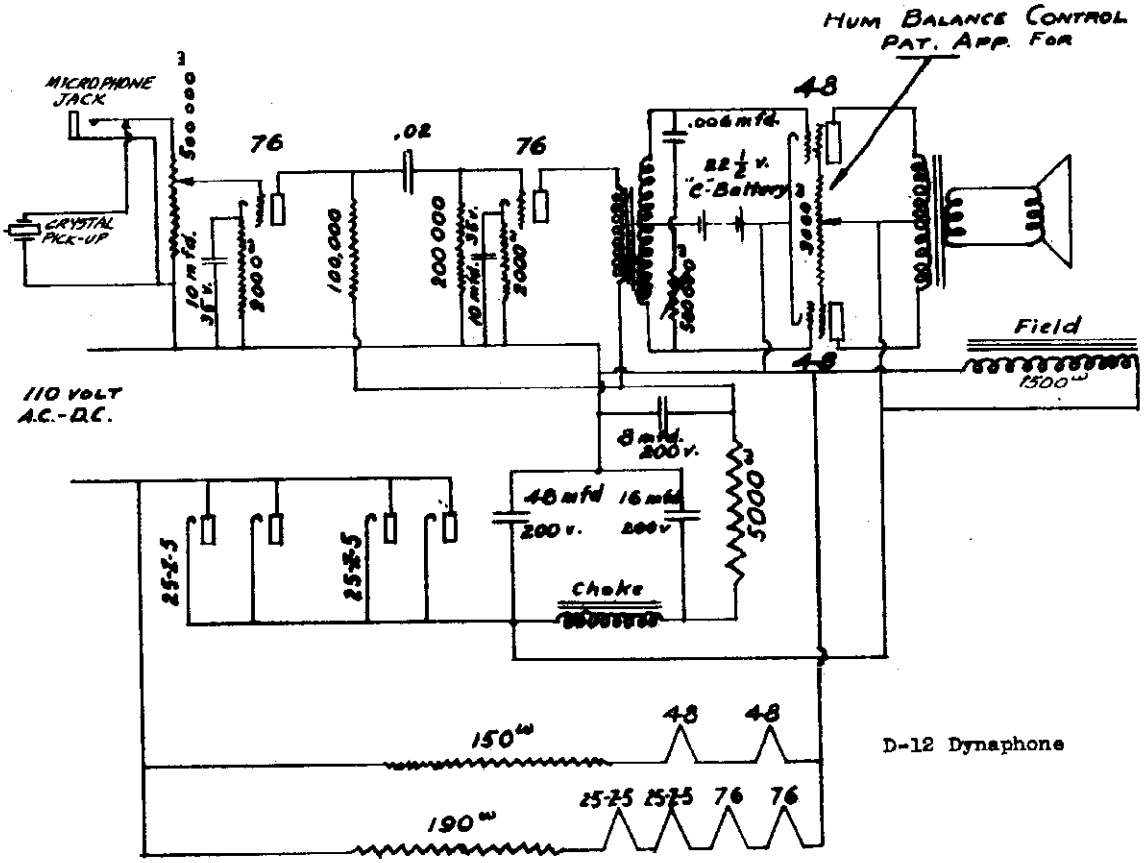

©John F. Rider, Publisher

MODEL D-1
Schematic

ANSLEY RADIO LABORATORIES

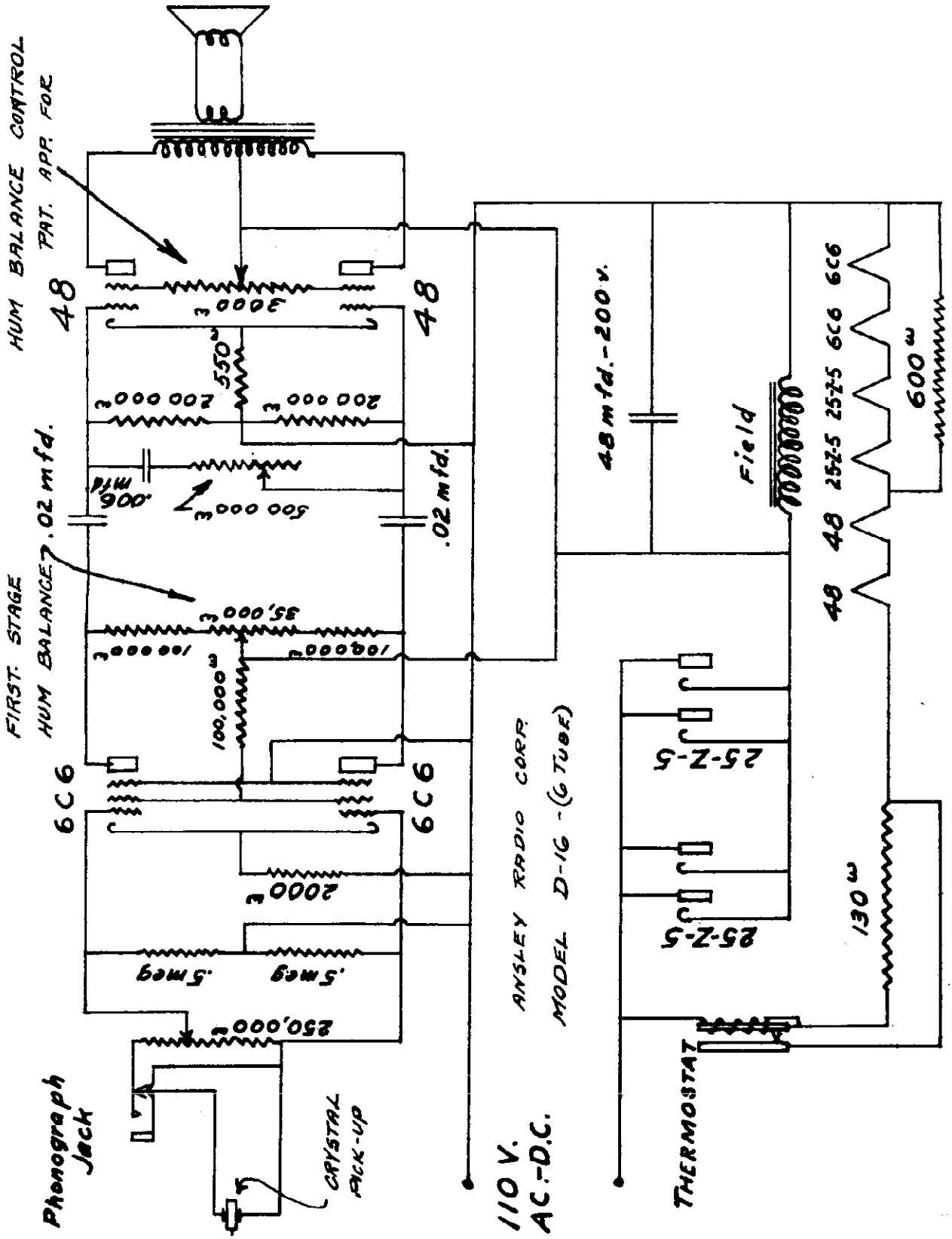

©John F. Rider, Publisher

MODEL U-10
Schematic
Socket

ANSLEY RADIO LABORATORIES

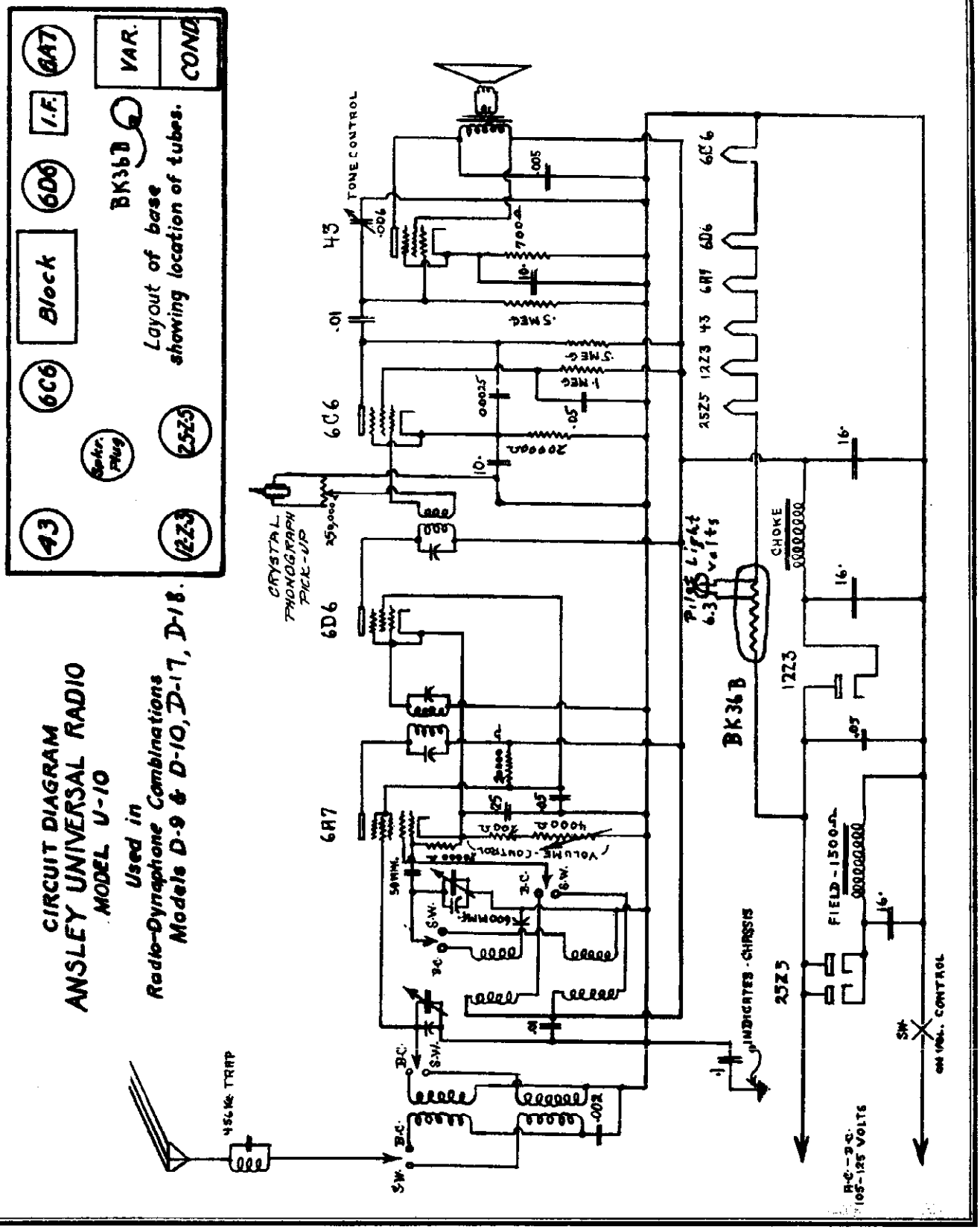

©John F. Rider, Publisher

ATWATER KENT MFG. CO.

MODEL 35
Schematic
MODELS 412,810
Coil Data

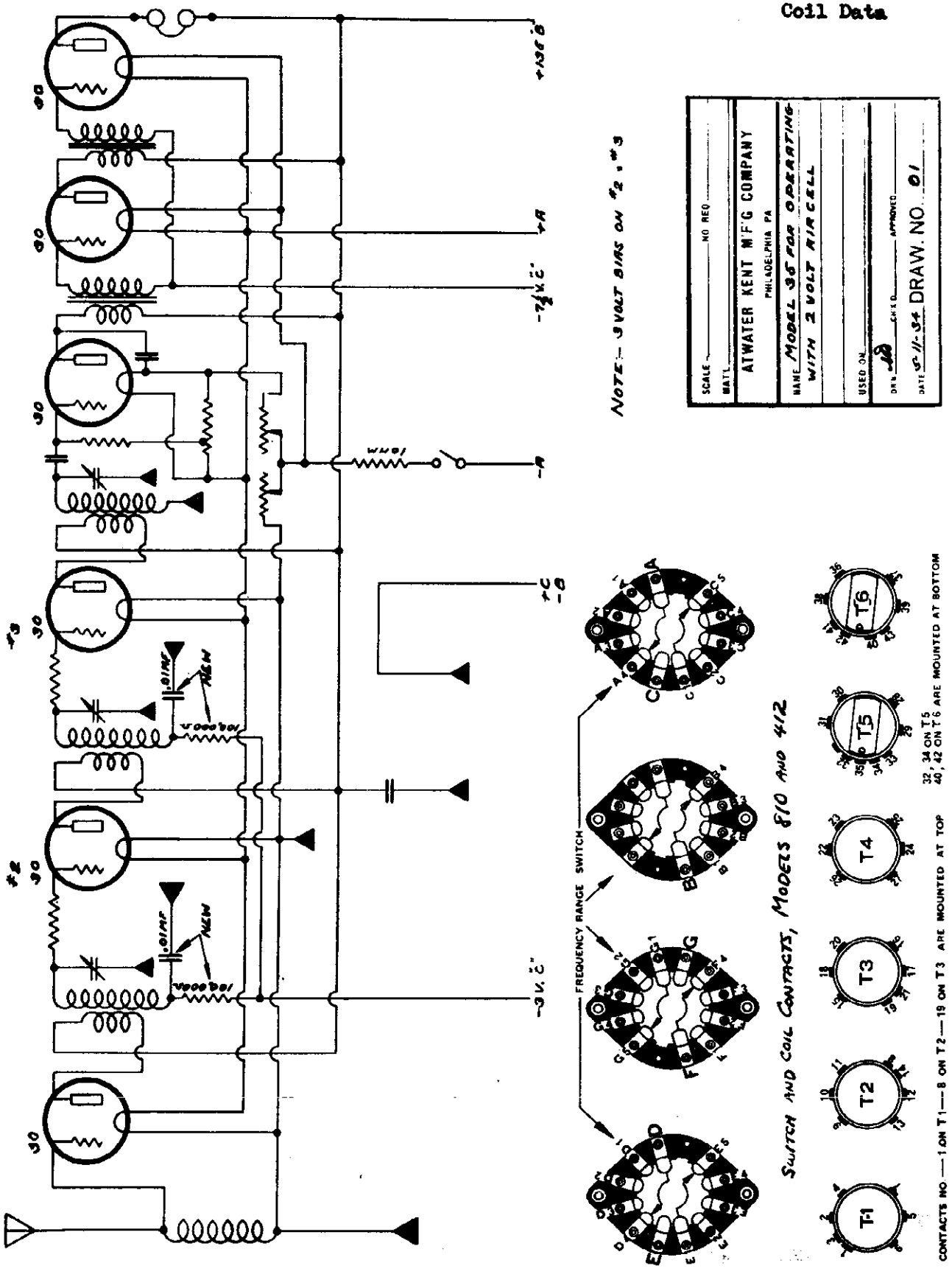

©John F. Rider, Publisher

MODEL 82-D
MODEL E-145
MODEL 155
MODEL 649
Changes

ATWATER KENT MFG. CO.

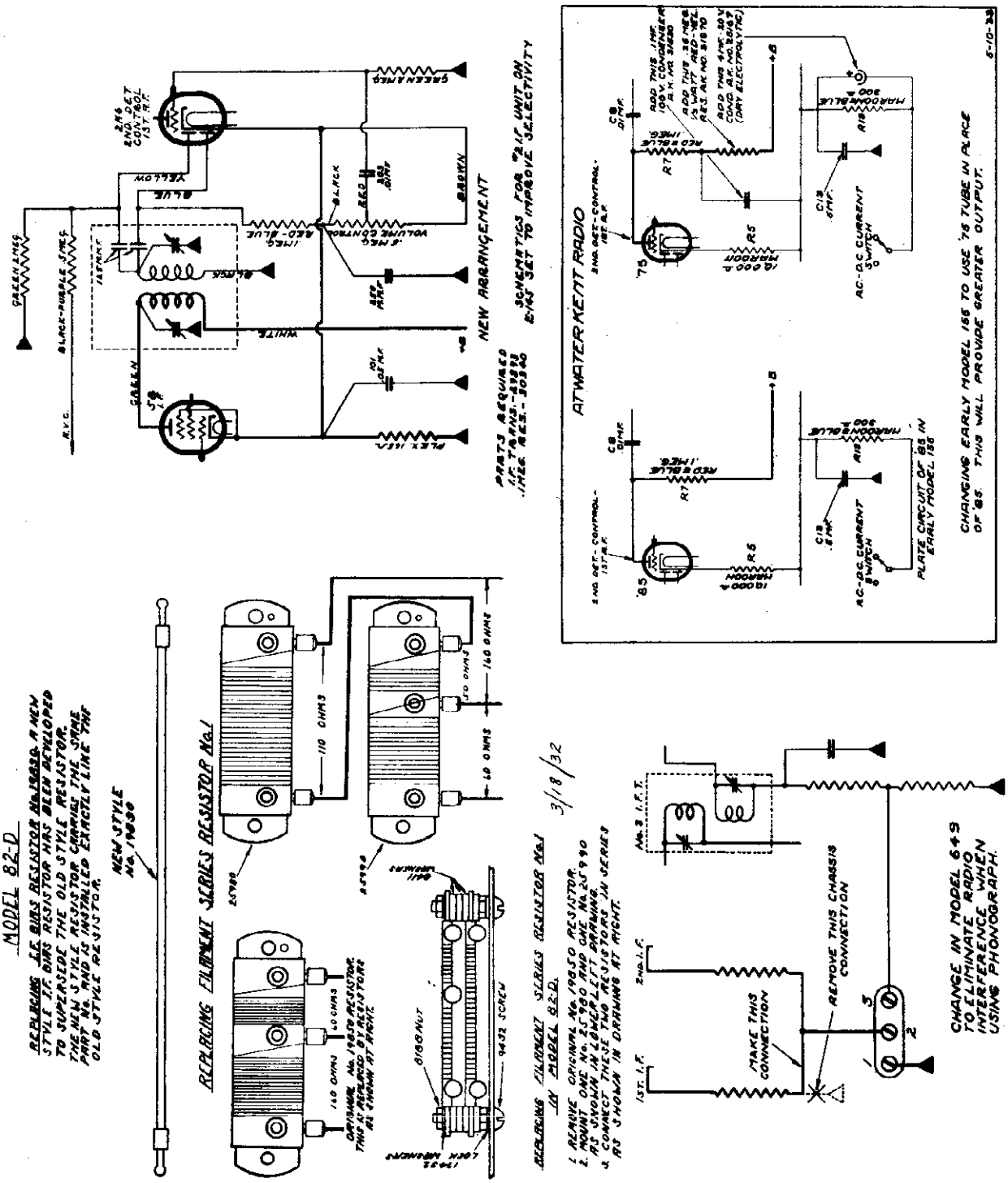

©John F. Rider, Publisher

ATWATER KENT MFG. CO.

MODELS 126,136
416,446
Schematic

DIAGRAM OF MODELS 126, 136, 416 and 446

Models 126 and 136 Have Glass Tubes with Suffix "G" Added to Type Numbers

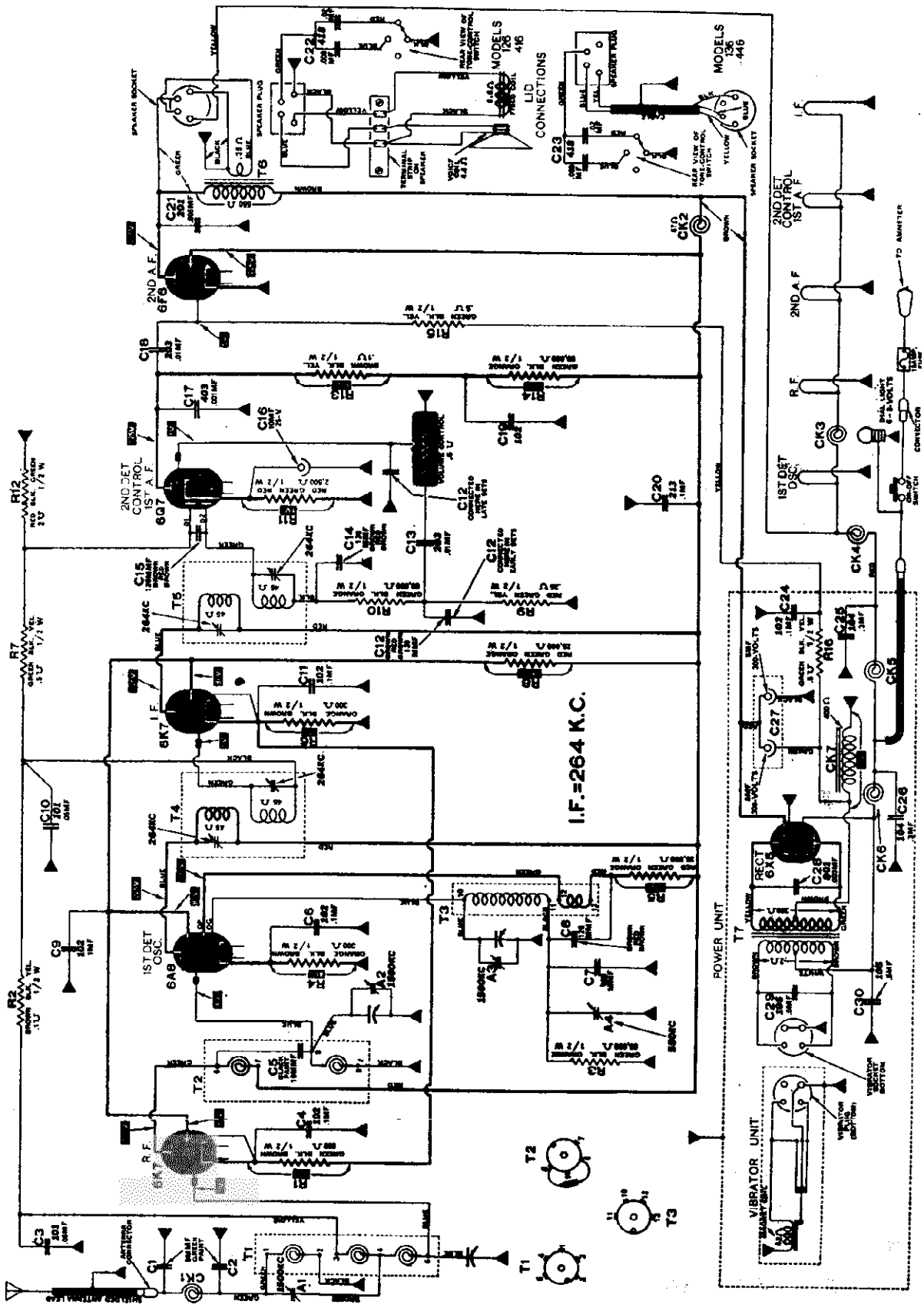

©John F. Rider, Publisher

MODELS 126,136,416, 446,556
Socket,Trimmers,Parts
Chassis,Alignment

ATWATER KENT MFG. CO.

MODELS 126, 136, 416, 446 and 556

IMPORTANT: Models 126, 136 and 556 Have Glass Tubes, with Suffix "G" Added to Type Numbers

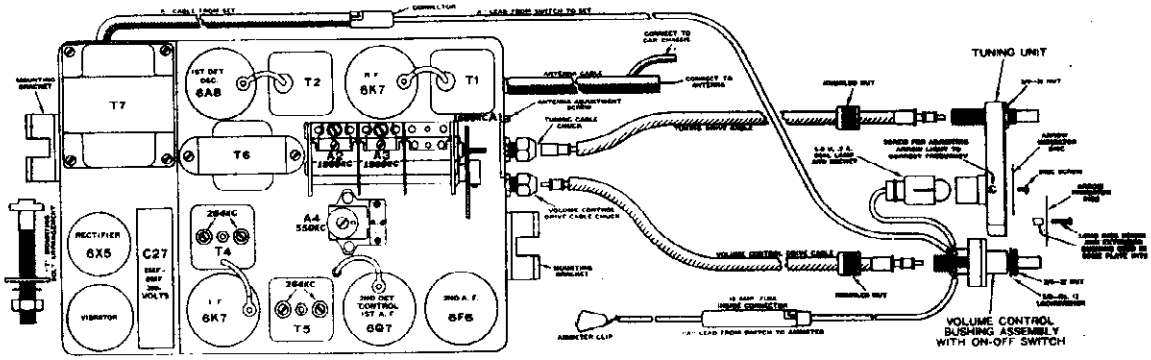

TRIMMER CONDENSERS

Trimmers are precisely adjusted at the factory, and readjustment is never required except in the normal course of servicing. The following technical data is therefore intended only for the use of radio service experts who have the equipment and experience for this work.

GENERAL

When adjusting trimmers, keep the radio volume control and tone control turned full clockwise.

Use an Atwater Kent No. 42590 I.F. coupling unit to couple the signal generator while aligning I.F. trimmers. The coupling unit may be purchased through any Atwater Kent distributor.

In order to keep below the AVC level, it is necessary to use the weakest possible output from signal generator that will give a reading on a sensitive output meter.

I.F. TRIMMERS

Turn variable condenser full out of mesh.

Connect signal generator (264 KC) to cap of I.F. tube by means of No. 42590 coupling unit. Peak two trimmers on top of T5.

Connect signal generator to cap of 1st-detector tube and peak two trimmers on top of T4.

DIAL ADJUSTMENT

With variable condenser fully meshed, the arrow indicator should be adjusted (by means of screw in center of dial lamp opening at rear of tuning unit) to the mark beyond the 550 KC end of dial.

R.F. TRIMMERS

Connect signal generator (1500 KC) to antenna and chassis, using a 200 MMF fixed condenser in series with the antenna lead. With dial at 1500 KC, peak A3 (oscillator), A2 (1st-detector) and A1 (antenna). Use first peak as A3 is screwed in from a loose position.

With signal generator at 550 KC, peak tracking condenser A4 while rocking tuning control slightly around the 550 KC mark.

Repeat adjustments at 1500 and 550 KC if necessary.

CONNECTIONS OF AUXILIARY SPEAKER CABLE

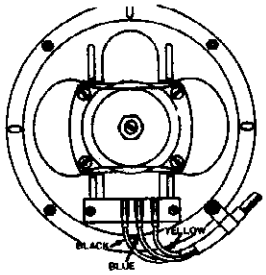

PARTS LIST MODELS 126, 136, 416, 446 and 556

32104	Set container with volume control	T4	50030 No. 1 I.F. Trans.
32208	Control shaft	T5	50050 No. 2 I.F. Trans.
26205	Station selector chuck	T6	32148 Output Trans.
26105	Inner plate	T7	32134 Power Trans. (126, 136, 416, 446)
29226	Check nut	T7	26291 Power Trans. (556)
32106	Ground clip (edge of set)		
32319	Bottom lid		**TRIMMERS**
32128	Snap buttons (2 used)	A1	32121 Antenna trimmer
32108	Snap buttons (6 used)		29119 Double I.F. trimmer
32142	T head mounting bolt		**RESISTORS**
32204	Mounting washer		For tabular resistors, refer to lists in previous supplements.
24485	Lockwasher		Molded resistors with a band of color instead of a dot are rated at ½ watt. Unless otherwise identified in values, these are the standard ½ watt molded type, not a special internal construction permits rating safely at ½ watt.
32171	Mounting nut		**CHOKES**
32217	Cable and socket from chassis to lid	CK1	59270 Antenna choke
40990	Volume control assembly	CK2	19210 "B" Choke
32097	Vol. control mounting clips	CK3	36530 "A" choke
32187	No. 1 I.F.T. shield	CK4	50190 "A" choke
32189	No. 2 I.F.T. shield	CK5	36530 "A" choke
32219	Oscillator trans. shield	CK6	36630 "A" choke
32218	R.F.T. shield	CK7	32135 Iron core filter choke
32211	Clips on R.F., I.F. shields		**CONDENSERS**
32199	Clips on Osc. shield		Tabular condensers with letter "H" before code number are slightly smaller than those without "H" and are used in receivers described in later supplements.
32102	VOL. CONTROL .5 MEG.		
45370	TONE CONTROL SWITCH		
32182	Tone control nut		
32166	Tube shield (tall)		
32169	Holding ring (for the above)		
32266	Tube shield clip on base		
	SOCKETS		
30058	Universal 8 prong		
32114	Vibrator socket		
29057	Speaker socket		
	TRANSFORMERS		
T1	50060 No. 1 R.F. Trans.		
T2	50070 No. 2 R.F. Trans.		
T3	50080 Oscillator Trans.		

		29057	120 MMF
		C16	25379 10 MF, 25 V.
		C18A	25379 10MF, 25 V (556)
		C27	32136 8-8 MF 300 V (126, 136, 416, 446)
		C27	32273 8-8 MF 300 V (556)
		C28	30210 .002 MF 600 V (all)
			POWER UNIT
		50170	Power unit complete with tube (126, 136, 416, 446)
		50340	Power unit (556) complete with tubes
		32209	Base and socket assembly
		25045	Power trans. brackets
		32138	VIBRATOR
		32095	Container less covers
		32258	Top cover
		32096	Bottom cover
			REMOTE CONTROL UNIT
		32122	Tuning unit*
		32222	Switch and bracket assem. complete with leads
		32221	Switch and bracket assem. less leads
		32172	Arrow indicator disc
		30091	Dial plate
		30093	Disc screw 7/32"
		32223	Disc screw 3/8"
		30099	Disc screw 3/4"
		30101	Disc bushing 3/16"
		30094	Disc bushing 33/64"
		32225	Sheath-clamping nut
		32123	Tuning flexible drive assem.
		32151	Volume control flexible drive assembly
			*Parts of tuning unit assembly are not sold separately.

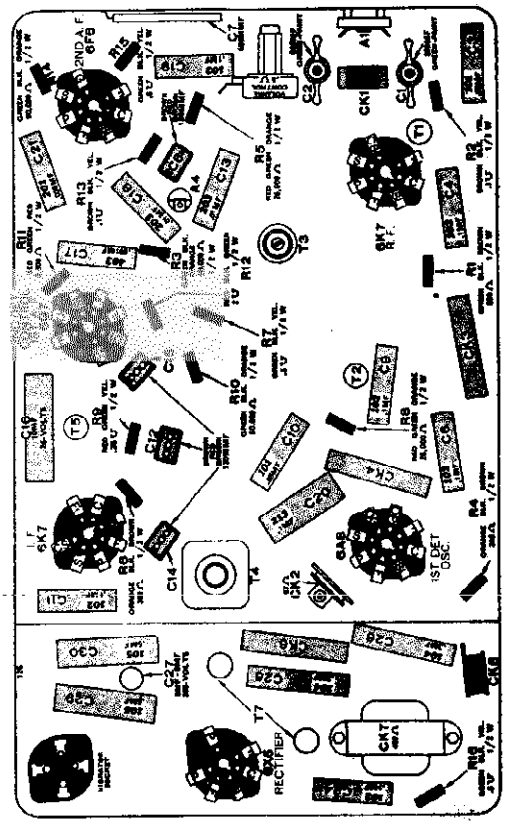

MODELS 126, 136, 416 and 446

Model 556 is similar except for differences in the Power Unit and the 2nd A-F bias circuit

ATWATER KENT MFG. CO.

Remote and Header Type
SPEAKER COMBINATIONS
FOR
ATWATER KENT AUTO RADIO

MODELS 126, 416 and 556

Models 126, 416 and 556 have a self-contained speaker in lid. One additional speaker may be used with these models. The additional speaker may be one of the following three types:—

(1) HF (header type) for 1936 Ford only. The HF speaker has cable "A" packed with it.

(2) S6 (6½" diameter).*

(3) S8 (8½" diameter).*

MODELS 136 and 446

Models 136 and 446, which do not have a self-contained speaker, may be used with either one or two speakers. **If only one speaker is to be used, with Models 136 and 446, there is choice of:—**

(1) HF (header type) for 1936 Ford only.

(2) S6 (6½" diameter).

(3) S8 (8½" diameter).

No extra cables are required to connect one of these speakers to Models 136 and 446. **If two speakers are to be used with Models 136 and 446,** the following combinations are available:—

(1) S6 and HF speakers* (1936 Ford only).

(2) S8 and HF speakers* (1936 Ford only).

(3) S6 and S8 speakers*.

*The combinations of speakers marked above and in illustrations at right with star require auxiliary cable No. 50230. When necessary, additional double-conductor shielded cable (No. 32284) may be used to lengthen the auxiliary cable No. 50230. Specify the desired length of extra cable. See page 4 for connections.

INSTALLING HEADER TYPE SPEAKER "HF" IN 1936 FORD

The type "HF" dynamic speaker is designed to fit in the header strip (above windshield) in 1936 Ford cars. The header has a cut-out space for this purpose.

Two small mounting brackets are provided for quickly fastening the speaker, and a shielded two-wire cable, with plug at one end, and three tip contacts at the other end, is supplied for quick, easy connection.

Procedure:

1. Remove header. Take off paper cover from speaker opening in the header.

2. Fasten speaker to header with two brackets as shown in illustration.

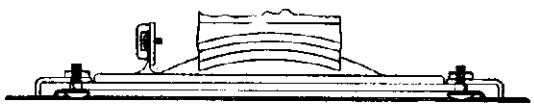

3. Tie the tip-end of cable to lower end of string that car manufacturer has provided in right-hand front column. Pull cable gently up through the column.

4. Insert cable tips in terminal strip, with cable leads corresponding to colors on terminals in speaker. Fasten cable to cone housing by means of clamp.

5. Replace header, pulling slack cable down column.

6. The correct connections for the header speaker in various combinations are shown on this page.

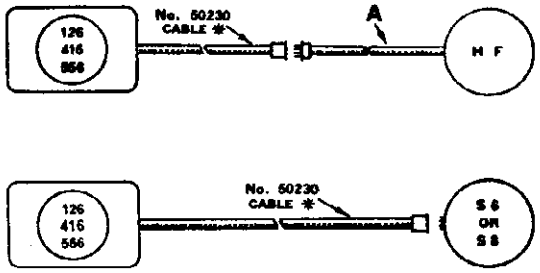

Models 126, 416 and 556, with self-contained speaker, may be used with one additional speaker, HF, S6 or S8, as shown above.

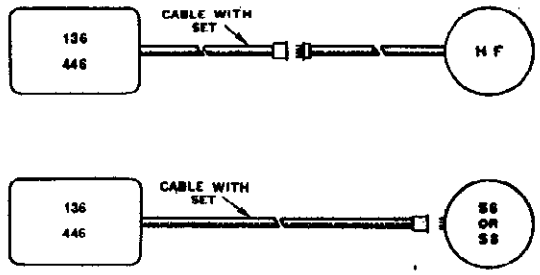

Models 136 and 446 may be used with one speaker, HF, S6 or S8, as shown above, or with a combination of two speakers as shown below.

See page 4 for connections.

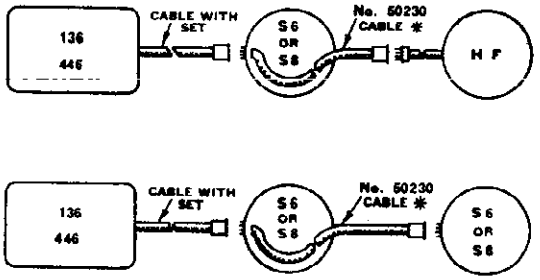

©John F. Rider Publisher

General Notes

ATWATER KENT MFG. CO.

BATTERY DRAIN AND OTHER VALUABLE DATA

ATWATER KENT BATTERY-OPERATED MODELS

Model Number	Cabinet	Speaker Type	Speaker Number	Transmitter Range	Year	"A" Battery Volts	"A" Battery Amps.	"B" Battery Volts	"B" Battery Mils.	"C" Battery Volts	Tubes	Dial Lamp	I. F. (KC)
67	Table	Dynamic	F7	Broadcast	1929	6	2.2	180	30	45	3—222, 2—112A, 2—171A	1—6 volt, .15 amp., No. 16099	T.R.F.
67C	Console	Dynamic	F7C										
70Q	Console	Inductor		Broadcast	1930	6	2.2	180	30	45	3—222, 2—112A, 2—171A	1—6 volt, .15 amp., No. 16099	T.R.F
76Q	Console	Inductor											
82Q	Compact	P. M. D.**	18400	Broadcast	1931	2	.62	135	25	15	4—32, 2—30, 1—33	None	130
84Q	Compact	P. M. D.	18400										
85Q	Console	P. M. D.	19900										
280Q	Compact	P. M. D.	18400	Broadcast	1932	2	.62	135	25	15	4—32, 2—30, 1—33	None	130
534Q	Compact	P. M. D.	31700	Broadcast	1932	2	.54	180	30	15	3—34, 2—32, 4—30	110 volt, ¼ watt, Neon, No. 23832	130
469Q	Console	P. M. D.	31500										
387	Compact	P. M. D.	31700	Broadcast and	1933	2	.42	135	24	12	2—34, 1—1A6, 1—32, 3—30	1—60 mil., 2 volt,† No. 26721	264
427Q	Console	P. M. D.	36400	Police									
165Q	Compact	Magnetic	37170	Broadcast and Police	1934	2	.5(165Q) .56(525Q)	135	20	7½	1—1A6, 1—34, 1—32, 1—30, 1—19	1—60 mil., 2 volt,†† No. 26721	264
525Q	Console	Magnetic	39200										
465Q	Compact	Magnetic	*42900	540-4800 KC, 5.3-16 MC	1934	2	.62	135	22	7½	1—1C6, 1—34, 1—32, 1—30, 1—19	1—60 mil., 2 volt, No. 26721	264
655Q	Console	Magnetic	*43200										
768Q	Compact	Magnetic	43100	540-22,500 KC	1934	2	.6	180	25	None	1—1C6, 2—34, 1—32, 4—30	1—60 mil., 2 volt, No. 26721	472½
978Q	Console	Magnetic	43200										
625Q	Compact	Magnetic	46700	540-4800 KC, 5.3-16 MC	1934	2	.62	135	22	7½	1—1C6, 1—34, 1—32, 1—30, 1—19	1—60 mil., 2 volt, No. 26721	264
385Q	Console	Magnetic	46800										
415Q	Compact	Magnetic	48500	540-1712 KC	1935	2	.62	135	22	22½	1—1C6, 1—34, 1—32, 1—33, 1—30	1—60 mil., 2 volt, No. 26721	450
285Q	Console	Magnetic	49900										
237Q	Compact	Magnetic	50700	540-18,000 KC	1935-36	6	2.1	None	—	None	1—1C6, 2—34, 1—1B5, 1—30, 1—19, 1—6Z4	2—60 mil., 2 volt, No. 26721	472½
467Q	Console	Magnetic	50800										
637Q	Compact	Magnetic	50700	540-18,000 KC	1935-36	2	.6	180	30	None	1—1C6, 2—34, 1—1B5, 3—30	2—60 mil., 2 volt, No. 26721	472½
747Q	Console	Magnetic	50800										
515Q	Compact	Magnetic	55500	540-1712 KC, 5.4-18 MC	1936	2	.62	135	25	22½	1—1C6, 2—1A4, 1—1B5, 1—33	1—60 mil., 2 volt, No. 26721	450
485Q	Console	Magnetic	55600										

"B" current is dependent on actual "B" voltage, incoming signal strength, volume level, and other factors. The values given above are high averages, not maximum.
* In late 465Q, speaker is 66700. In late 655Q, speaker is 44000.
** Abbreviation. "P. M. D." indicates a permanent-magnet dynamic speaker.
† Late sets only.
†† 525Q only.

IMPORTANT DATA FOR ATWATER KENT AUTO RADIO

(1931 to 1936 Inclusive)

Model	Year	"A" Battery Volts	"A" Battery Amps.	"B" Battery Volts	"B" Battery Mils.	"C" Battery Volts	Tubes	Dial Lamp	Speaker Cone No.	I.F. (KC)	Description
81 81B 81C	1931	6	4	135	25	30	3-36, 2-37, 2-38	MAZDA 50 (clear) AK$21407	21161	TRF	Model 81 has 3 units: Receiver-and-battery container, speaker, remote control. Models 81B and 81C have separate containers for the chassis and the "B" batteries. "C" batteries are mounted in the chassis container in 81B and 81C.
91 91B 91C	1932	6	4	135	30	30	3-36, 3-37, 2-38	MAZDA 50 (clear) AK$21407	21161	260	Same unit arrangement as 81, 81B and 81C.
636 756 756B	1933	6	5¾	DYNAMOTOR No. 30860		..	2-39, 1-36, 1-85, 2-41	MAZDA 50 (clear) AK$21407	21161	262½	Model 636 has 3 units: Chassis with controls, speaker, dynamotor. Model 756 has 3 units: Chassis with dynamotor, speaker, remote control. 756B has 4 units: Chassis, dynamotor, remote control, speaker.
424 534	1933	6	4	SYNCHRONOUS VIBRATOR No. 25995		..	1-77, 1-44, 1-75, 1-41	MAZDA 50 (clear) AK$21407	25504 (424) 25603 (534)	264 450	Model 424 is one complete unit. Model 534 is one unit, but with remote control.
816	1934	6	5	SYNCHRONOUS VIBRATOR No. 26863		..					Models 816 and 926 have chassis, speaker and power unit in one container, and separate remote control. Model 936 has 3 units: Chassis, speaker, remote control.
926	1934	6	6	GENEMOTOR No. 26734		..	2-39 (6D6 in late), 1-6A7, 1-85, 2-41	MAZDA 40 (green) AK$16099	26826 (816) 26826 (926) 26822 (936)	264	
936	1934	6	6	GENEMOTOR No. 26734		..					
666	1934	6	6	VIBRATOR No. 27005		..	2-6D6, 1-6A7, 1-85, 1-41, 1-6Z4	MAZDA 40 (green) AK$16099	26826	264	Model 666 has 2 units: Chassis with speaker, and remote control.
776	1935	6	6	VIBRATOR No. 27005		..	2-6D6, 1-6A7, 1-85, 1-41, 1-6Z4	MAZDA 40 (green) AK$16099	26826	264	Model 776 has 2 units: Chassis with speaker, and remote control.
126 136 416 446 556	1936	6	6.8*	VIBRATOR No. 32138		..	Models 126, 136, 556 (glass tubes): 2-6K7G, 1-6A8G, 1-6Q7G, 1-6F6G, 1-6X5G Models 416, 446 (metal tubes): 2-6K7, 1-6A8, 1-6Q7, 1-6F6, 1-6X5	MAZDA 51 (clear) AK$28299	30096 (126) 30096 (416) 30096 (556) 30096 (S6) 26822 (S8)	264	Models 126, 416 and 556 are single unit sets, with remote control. 126 and 416 have tone control and chrom speaker grille. Models 136 and 446 have external speaker. These five models may be used with additional speaker, S6, S8 or HF (header type for 1936 Ford).

*Add 1 amp. if additional speaker is used.

©John F. Rider, Publisher

ATWATER KENT MFG. CO.

MODEL 137
Schematic
Socket, Trimmers

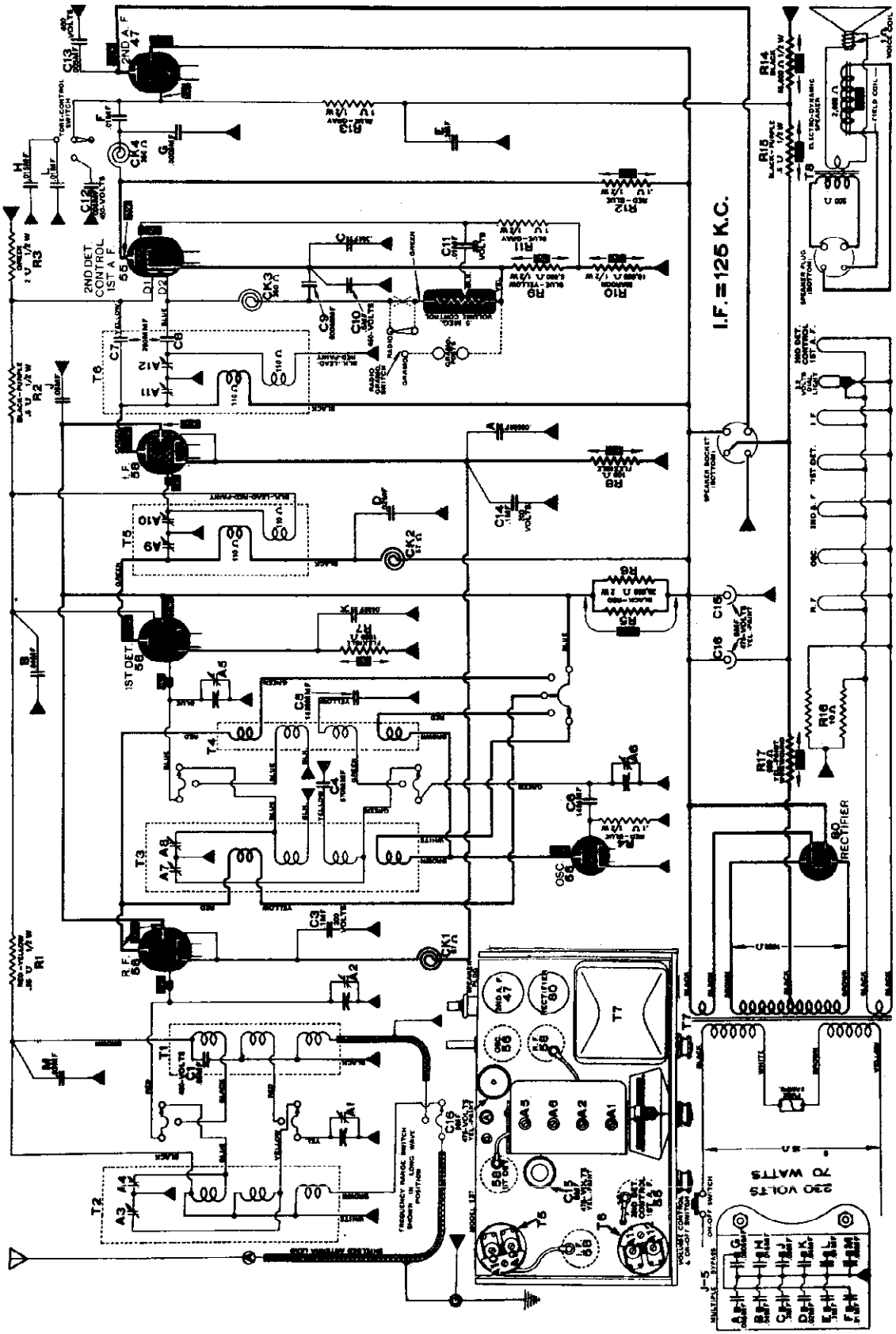

©John F. Rider, Publisher

MODEL 137
Chassis
MODEL 184
Socket, Trimmers
Chassis

ATWATER KENT MFG. CO.

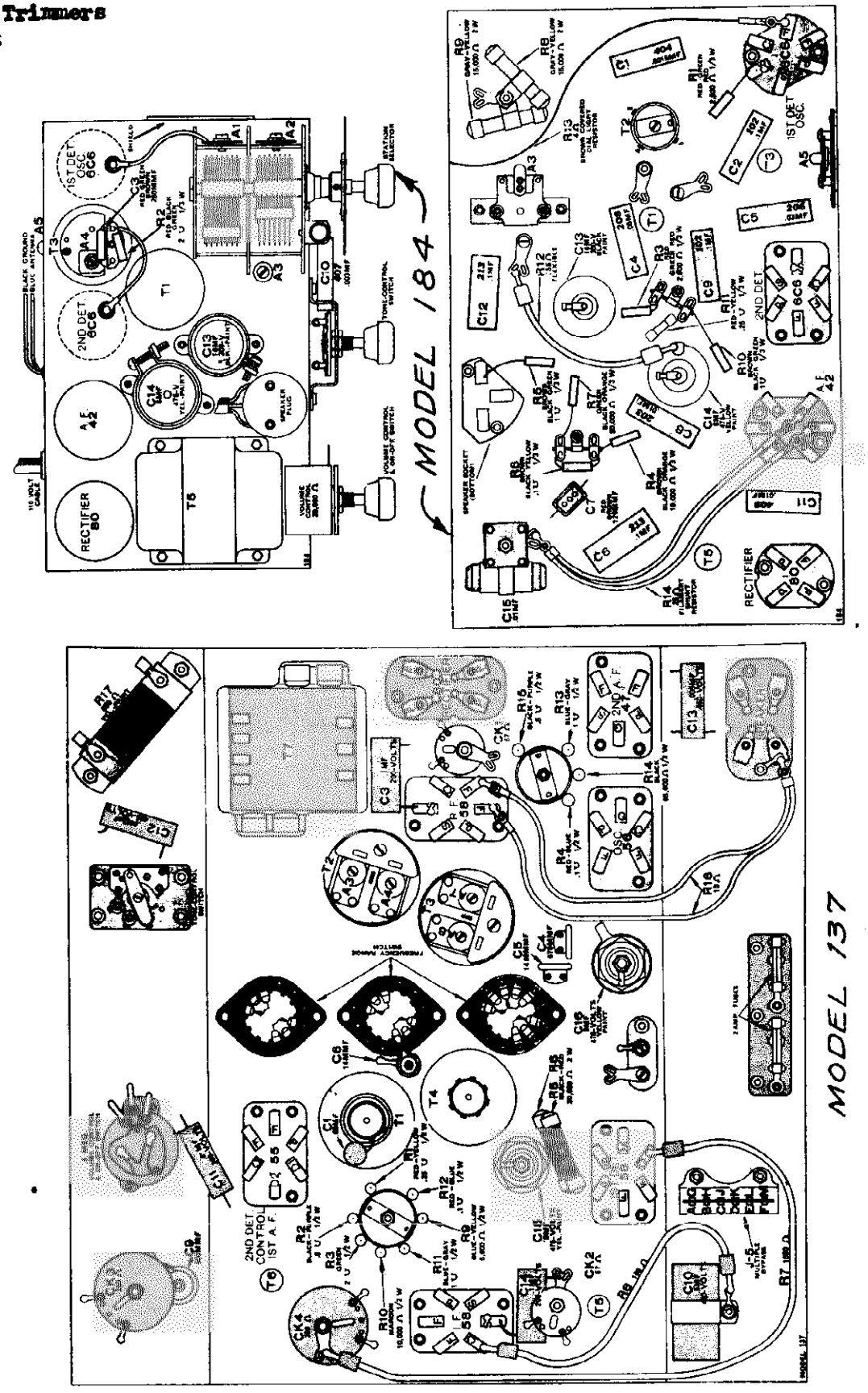

©John F. Rider, Publisher

MODEL 157

(European Compact)

24101	Cabinet with escutcheon
25561	Cloth screen
25448	Escutcheon
50090	Dial plate and bracket
25453	Dial plate
15404	Dial lamp
22804	Dial knob
22062	Volume control knob
22062	Tone control knob
25278	Range switch knob
25228	Volume control
20750	Tone control switch
22297	Shaft and blade for tone control switch
24009	Range switch

TRANSFORMERS

T1	24008	(Group, includes T1 and T4)
T2	25929	Long wave RF transformer
T3	25951	Long wave oscillator transformer
T4	24008	(group, includes T1 and T4)
T5	25556	No. 1 I.F.T., less trimmers
T6	22059	No. 2 I.F.T., less trimmers
T7	29470	Power transformer
T8	19697	Output transformer, with strap

CONDENSERS

28040	Tone control condenser
22558	8MF, 475 V. electrolytic
24250	Multiple bypass (J5)

RESISTORS

R7	16520	1050 ohms, flexible
R8	20040	100 ohms, flexible
R17	27950	500 ohms, flexible

CHOKES

19210	RF choke (small)
17580	IF choke (large)

TRIMMERS

30110	Double trimmer, long wave transformers
24760	Double trimmer, I.F.T.

SHIELDS

25452	Shield for T1 and T4
21877	Shield for T5 and T6
25452	Shield for T2 and T3
22585	Tube shield
23745	Auxilliary tube shield

VARIABLE CONDENSER

24011	Variable condenser
18809	Dial knob shaft
17961	Dial rubber and bushing
20119	Trimmer mica
20149	Dial gear

SOCKETS

22755	Socket for '55 or '58
22754	Socket for '47 or '56
22689	Rectifier socket
21556	Speaker socket
24015	Fuse socket

MISCELLANEOUS

25997	Phono switch
15534	Line fuse
25789	Instruction sheet, F-1056
25597	Shipping container

157 SPEAKER NO. 17500

19465	Diaphragm
18870	Field coil
19697	Output transformer, with strap
19487	Cable and plug assembly

MODELS E145, E145X

(EUROPEAN COMPACT)

For parts not listed below, refer to Modal 145

27452	Variable condenser assembly.....
28426	Dial plate
29760	Range switch
28294	Instruction sheet F-1205

TRANSFORMERS

42050	No. 1 R.F.T. Broadcast range
42060	No. 1 R.F.T. Long wave and short wave.
41870	Oscillator transformer, broadcast range
41980	Oscillator transformer, long wave
28826	No. 1 I.F.T.
28827	No. 2 I.F.T.
28821	Output transformer
28566	Power transformer (8505)
40140	Choke in No. 2 I.F.T.

CONDENSERS

28051	8 MF, 475 V., electrolytic
25379	10 MF. 25V., electrolytic
42580	920 MMF
59190	420 MMF

TRIMMERS

39450	Double RF trimmer
32880	Double I.F. trimmer (No. 1 I.F.T.)
41850	Trimmer for No. 2 I.F.T.
59650	Base trimmer (rear of chassis)
51870	Base trimmer
42240	Base trimmer (blue lead)

SHIELDS

25055	I.F.T. shield
27545	R.F.T. shield
28612	Shield for long wave oscillator
27781	Shield for broadcast oscillator

MODEL 168

(European Console)

TRIMMERS

A3,4	32510	Double R.F. trimmer
A5,6	32510	Double R.F. trimmer
A9,10	27660	Double I.F. trimmer
A11,12	24760	Double I.F. trimmer

168 SPEAKER NO. 28800

20757	Diaphragm
21260	Field coil
21695	Output transformer (T9)
24934	Range switch
25228	Volume control
25418	Silencing potentiometer and phono switch
24540	Tone control switch
22297	Shaft and blade for above
25051	Variable condenser
22697	Dial gear
22578	Shaft bracket
22692	Shaft
22687	Dial rubber and bushing
24928	Phono switch on back of silencing potentiometer
24936	Range switch dial assembly

TRANSFORMERS

T1	25929	No. 1 long wave, less trimmers
T2	32150	No. 1 Broadcast
T3	25079	No. 2 long wave, less trimmers
T4	32120	No. 2 broadcast
T5	25556	No. 1 I.F.T. less trimmers
T6	22059	No. 2 I.F.T. less trimmers
T7	30920	Input transformer
T8	32240	Power transformer
T9	21695	Output transformer

CONDENSERS

C2	31180	680 MMF.
C3	32160	1450 MMF.
C4,5	27650	8 MMF.
C6	17440	500 MMF.
C7	21530	Tone control condenser (B-11)
C8	22558	8MF, 475 V., electrolytic
C9	25820	.7 MF (K5)
C10	22558	8 MF., 475 V. electrolytic
C11, 12	30240	250 MMF.
C13	23250	.01 Line bypass
	32140	Multiple bypass (J-12)

RESISTORS

R5	16520	1050 ohms, flexible
R6	20040	100 ohms, flexible
R10	24450	6400 ohms, flexible
R12	16520	1050 ohms, flexible
R14	17077	10 ohms, flexible
R15	25950	200 ohms, flexible
R17	31360	1 ohm, flexible

CHOKES

CH1,2	19210	R.F. choke
CH3	28970	Filter choke unit

©John F. Rider, Publisher

Turn volume control on full, turn tone control to "high" and use the weakest possible signal that will give a reading on a sensitive output meter.

I. F. TRIMMERS.

Connect an I. F. test oscillator to the 1st-detector tube by means of the I. F. coupling unit No. 42590. Adjust the I. F. oscillator to 125 KC. Peak trimmers A8, A9 and A10.

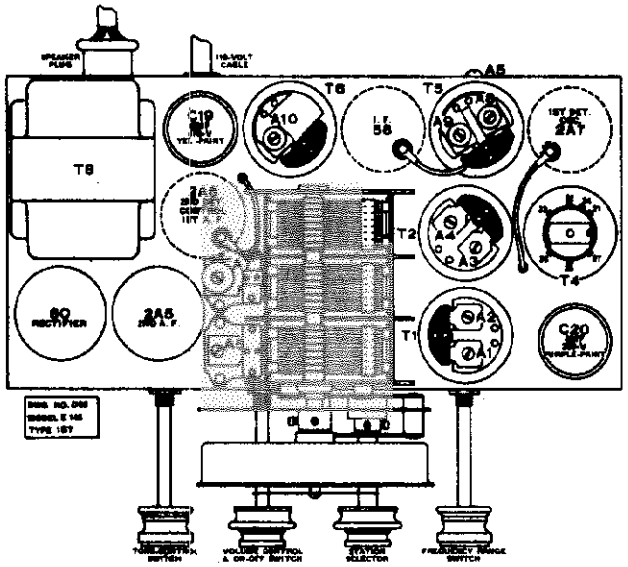

DIAL POINTER ADJUSTMENT.

With the variable condenser all the way in, the dial pointer should be a pointer's width beyond 500 KC (approximately 498 KC).

R. F. TRIMMERS.

Connect an R. F. test oscillator to the antenna and ground terminals of set. Use the weakest possible oscillator signal. Loosen the trimmer screws.

Short-wave range. There are no trimmer adjustments for this range.

Long-wave range. Oscillator at 400 KC and range switch in long-wave position, turn dial pointer to 400 KC. Peak trimmers A3, A4 and A7.

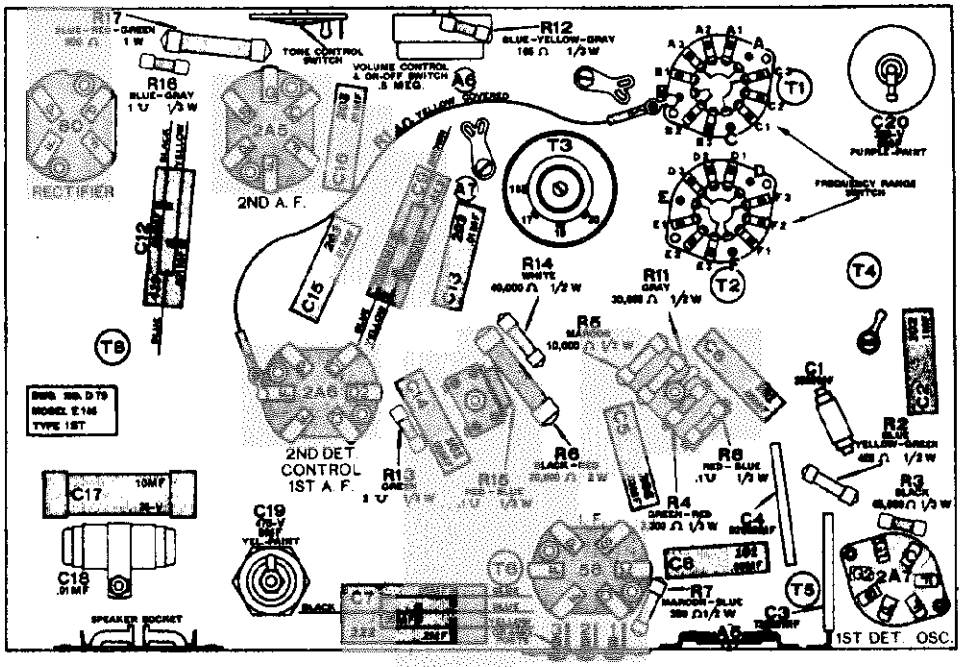

Medium-wave range. Oscillator at 1100 KC and range switch in medium-wave position, turn dial pointer to 1100 KC. Peak trimmers A1, A2 and A6. Tune oscillator and set to 560 KC. Peak A5. Repeat adjustments on A6 at 1100 KC and A5 at 560 KC until correct dial setting of pointer is obtained at these frequencies.

It should be observed that the first signal obtained as the oscillator trimmer A6 is turned in from open position must be used.

A1—Pre-selector, 1100 KC.
A2—1st-detector, 1100 KC.
A3—Pre-selector, 400 KC.
A4—1st-detector, 400 KC.
A5—Tracking, 560 KC.
A6—Oscillator, 1100 KC.
A7—Oscillator, 400 KC.

There are three I. F. trimmers, A8, A9 and A10. These are adjusted at 125 KC.

©John F. Rider, Publisher

ATWATER KENT MFG. CO.

MODEL E-145
Schematic

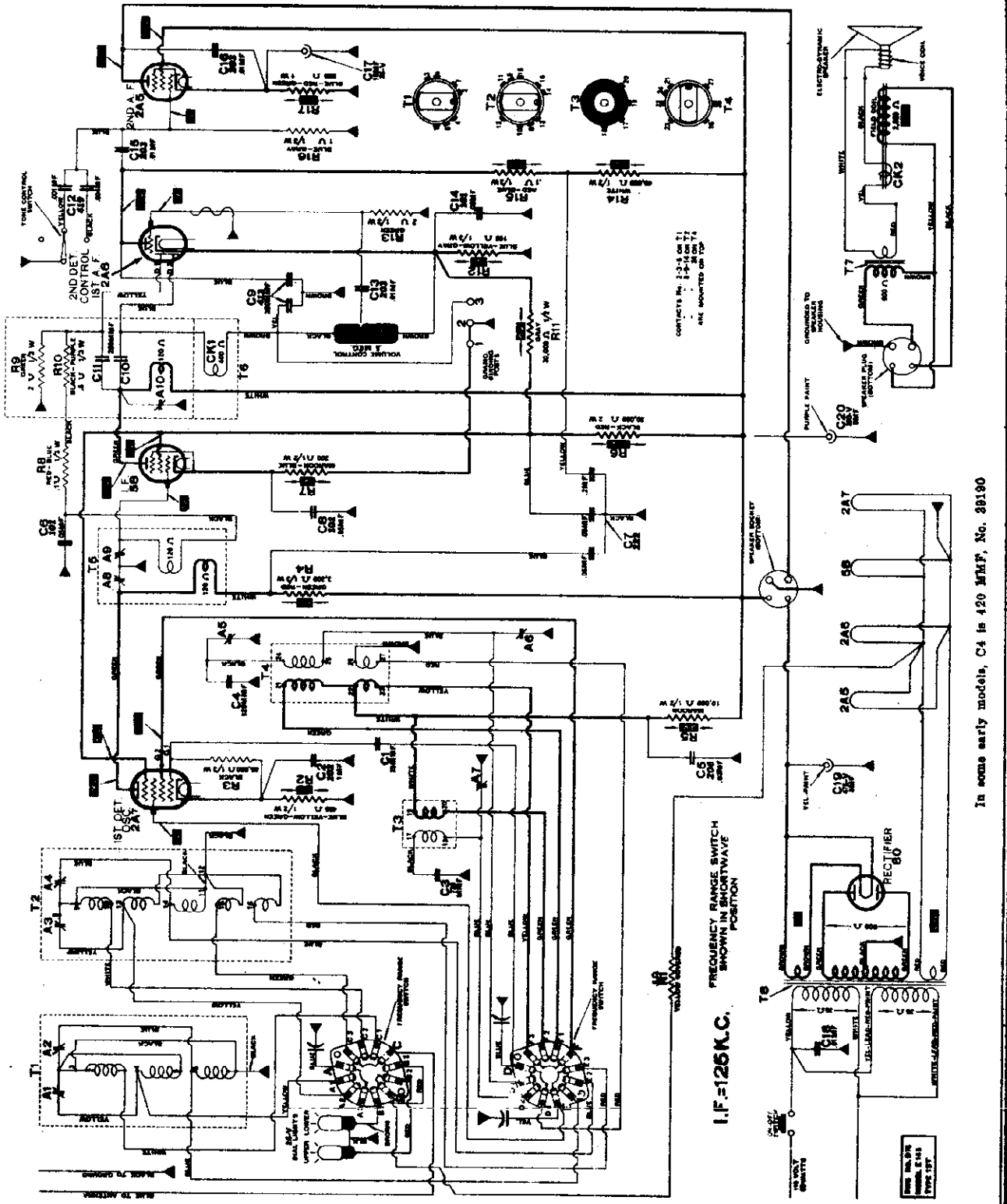

September 25, 1935.

© John F. Rider, Publisher

MODELS 184,184-X
MODELS 200,317,337
MODELS 206D,376D
MODELS E206,E206X Parts List

ATWATER KENT MFG. CO.

MODELS E208,E208X, E248,E248X
MODELS P216,P216X, P336,P336X

MODELS 184, 184X

27455		Var. condenser
27955		Dial plate assem.
27567		Vol. control, 20,000 ohm
46020		Dial light socket
29335		Tube shield (1st det.) with cap
27651		Tube shield (2nd det.)
29848		Lamp, 6.3-V.
42840		Tone control switch
28094		Tuning shaft
26095		Trimmer mica
29804		Inst. sheet, F-1274
47260		Shipping container

TRANSFORMERS

T1	45970	No. 1 R.F.T.
T2	46010	Oscillator trans.
T3	27486	No. 1 I.F.T.
T4	21672	Output trans.
T5	45840	Power trans. (110-V. 60-C.), S-334
47040		Power transformer (220-V., 60C.) S-345

RESISTORS

R12	20050	355 ohm, flexible
R13	45880	4 ohm, flexible
R14	45860	25 ohm, flexible

CONDENSERS

C5	29855	250 MMF. 450-V.
C7	29852	120 MMF. 450-V.
C13	27585	16 MF, 300-V.
C14	28051	8 MF, 475-V.
C15	25250	.01 MF, 450-V.

TRIMMERS

A5	45940	1st det. plate
A4	36570	R. F. grid
A6	45940	Sensitivity trimmer
	29776	Grooved trimmer screw
	29775	Trimmer screw retaining spring wire

SOCKETS

25196	5-prong, speaker socket
24492	4-prong, rectifier socket
24494	6-prong

MODELS 200, 317, and 337

29426	Variable condenser
42750	Tone control switch assembly
29101	Shaft and blade for above
28954	Range switch
28961	Volume control, .5 megohm

ELECTROLYTICS

C18	27592	Triple electrolytic (4-450-V., 8-450-V., 10-25-V.)
C20	28051	8 MF., 475-V.

TRANSFORMERS

T1	44990	No. 1 R.F.T.
T2	45010	No. 2 R.F.T.
T3	45020	Oscillator trans.
T4	47780	No. 1 I.F.T.
T5	47790	No. 2 I.F.T.
T6	45810	Power transformer (S-335)
T7	21672	Output transformer

TRIMMERS

44570	Double R.F. trimmer
29728	Double I.F. trimmer
39630	(A6) broadcast tracking

SOCKETS

21556	Speaker socket
30058	Universal 8-prong socket

RESISTORS

R18	46160	2 ohm, dial light resistor
R19	45860	25 ohm, filament shunt

30046	Cabinet with screen (337 only)
29985	Gasket and screen (337 only)
29759	Escutcheon and crystal

MODELS 206D and 376D

27425	Volume control
39620	Tone control switch
40780	Range switch
30054	Cabinet and screen (206D)
28749	Shipping container (206D)
28751	Shipping container (376D)
27954	Instruction sheet
27432	Variable condenser
27685	Dial (206D)
28536	Dial (376D)
28299	Dial lamp 6-8 volts

TRANSFORMERS

41750	No. 1 R.F.T., with trimmers
41760	No. 2 R.F.T., with trimmers
41770	Oscillator transformer
28527	No. 1 I.F.T. complete
28528	No. 2 I.F.T.
41860	Input audio transformer
41620	Output transformer

CHOKE

28587	Filter choke
24525	Choke cover

CONDENSERS

27598	3700 MMF
35840	50 MMF
40580	2200 MMF
41580	540 MMF
28405	Electrolytic, 8MF, 125V.

RESISTORS

35820	12 ohm flexible
19820	48 ohm flexible
31850	250 ohm flexible
20620	670 ohm flexible

TRIMMERS

42270	A6
29650	Rear of chassis (A5)
38890	A7
39430	Double R.F. trimmer

SOCKETS

21557	5 prong socket
24494	6 prong socket
26111	7 prong socket

206D SPEAKER NO. 43500

19465	Diaphragm
35510	Field coil
41620	Output transformer
28424	Cable and plug

376D SPEAKER NO. 43600

20737	Diaphragm
35510	Field coil
41620	Output transformer
22994	Cable and plug

MODELS E206 and E206X

(EUROPEAN COMPACT)

For parts not listed below, refer to Model 206

28295	Instruction sheet F-1204
42080	Range switch

TRANSFORMERS

42010	No. 1 R.F.T.
41980	No. 2 R.F.T.
41990	Oscillator transformer
28527	No. 1 I.F.T.
28528	No. 2 I.F.T.
21672	Output transformer
28702	Power transformer

TRIMMERS

39430	Double R.F. trimmer
39650	Rear of chassis
42250	Front base
38890	Base trimmer

SHIELDS

28565	R.F.T. shield
27781	Oscillator shield

MODELS E208, E208X, E248, and E248X

(European compact and console)

For parts not listed below, refer to Models E206, E246.

31973	Instruction sheet F-1332
49680	Shipping container (E208)
49810	Shipping container (E248)
48820	Tone control switch
30089	Front panel assembly

TUNING PARTS

Same as Model 328, 649, etc.

SOCKETS

21557	Speaker socket
30068	Universal 8-prong socket

TRANSFORMERS

T1	46880 No. 1 R.F.T., broadcast and short wave
T2	46890 No. 1 R.F.T., long wave
T3	46860 No. 2 R.F.T., broadcast and short wave
T4	46890 No. 2 R.F.T., long wave
T5	46870 Oscillator, broadcast and short wave
T6	46910 Oscillator, long wave
T7	49780 No. 1 I.F.T.
T8	49790 No. 2 I.F.T.
T9	44750 No. 3 I.F.T.
T10	46590 Input audio transformer
T11	46330 Power transformer
T12	21370 Output transformer

CONDENSERS

27585	16 MF, 300 V., electrolytic
29691	16 MF, 475 V., electrolytic
25379	10 MF, 25 V., electrolytic

TRIMMERS

28845	(A5)
38770	(A9, 10)
44570	Double R.F. trimmer
29823	Double I.F. trimmer

E208 SPEAKER No. 52500
E248 SPEAKER No. 50100

MODELS P216, P216X, P336, P336X

30047	Cabinet with screen (P336).....
29965	Screen and gasket (P336)

TUNING PARTS

Same as Models 317 and 337 with exception of dial plate No. 29971 (P216) and 29757 (P336).

28961	Volume control
28954	Range switch
42750	Tone control switch
29101	Shaft and blade
45170	Dial lamp socket
29648	Dial lamp 6.3 V., bayonet base
31006	Base cover (P216)
47590	Shipping container (P216)

TRANSFORMERS

T1	44990	No. 1 R.F.T.
T2	45010	No. 2 R.F.T.
T3	45020	Oscillator transformer
T4	45250	No. 1 I.F.T.
T5	45260	No. 2 I.F.T.
T6	21672	Output transformer
T7	49650	Power transformer

CONDENSERS

28051	8 MF., 475 V., electrolytic
27592	4-8-10 MF. electrolytic

TRIMMERS

44570	Double R.F. trimmer
29728	Double I.F. trimmer
39630	Tracking trimmer (A6)
28845	Oscillator (A5)

SOCKETS

24492	4 prong
24494	6 prong
26111	7 prong
21556	Speaker socket

P336 SPEAKER NO. 41900
P216 SPEAKER NO. 41900

ATWATER KENT MFG. CO.

MODEL 1
Schematic

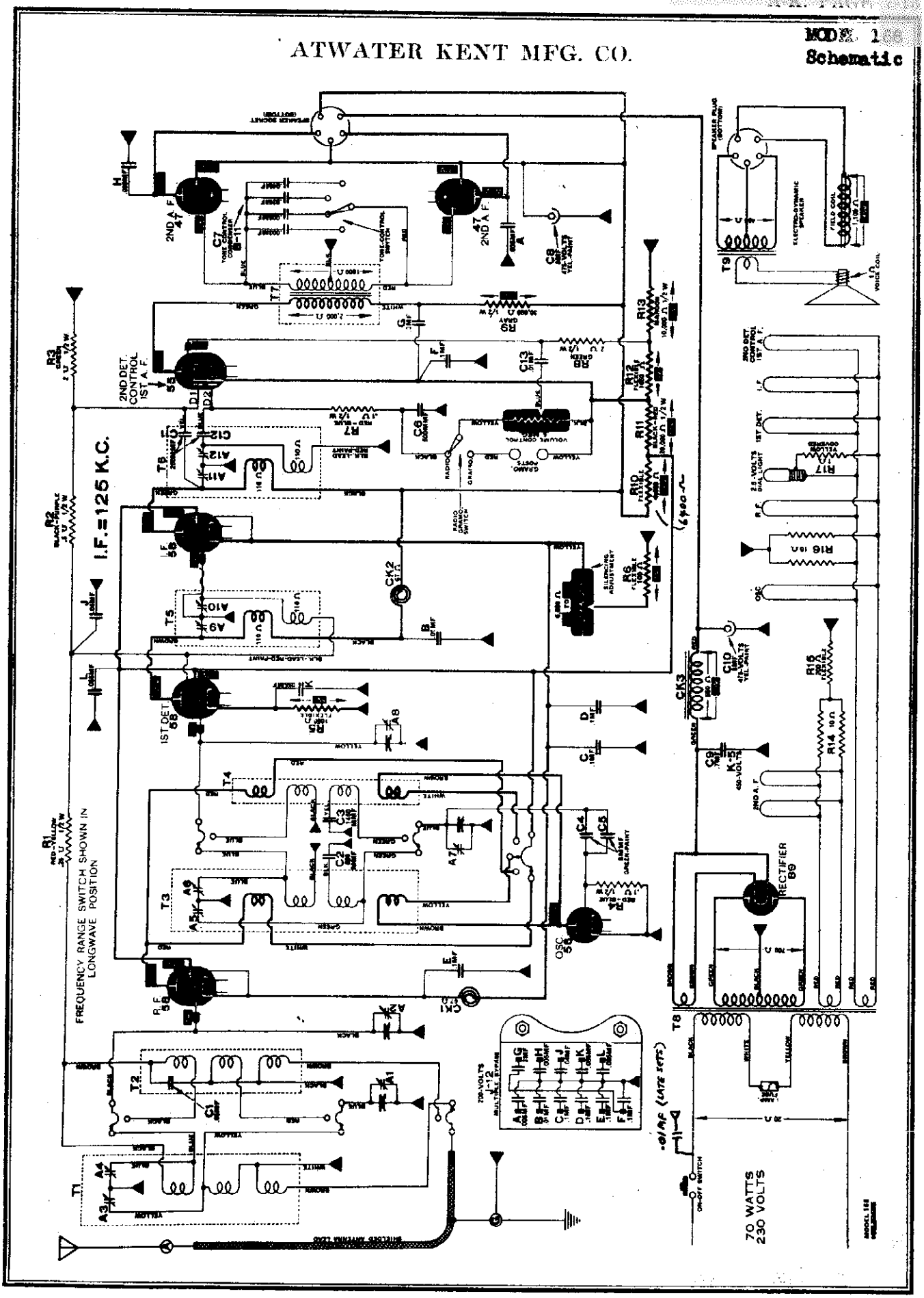

©John F. Rider, Publisher

MODEL 168
Socket, Trimmers
Chassis

ATWATER KENT MFG. CO.

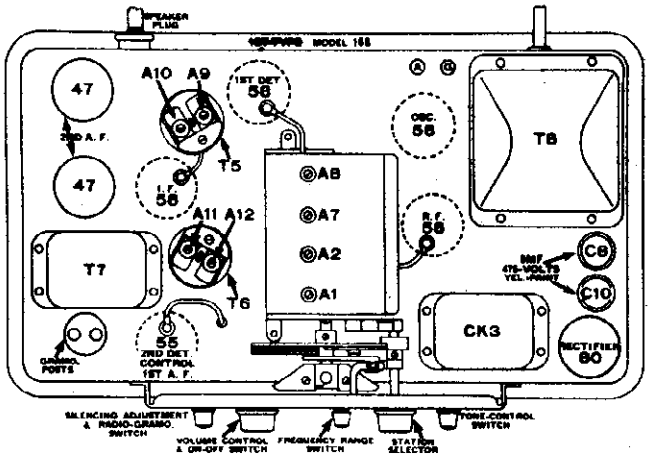

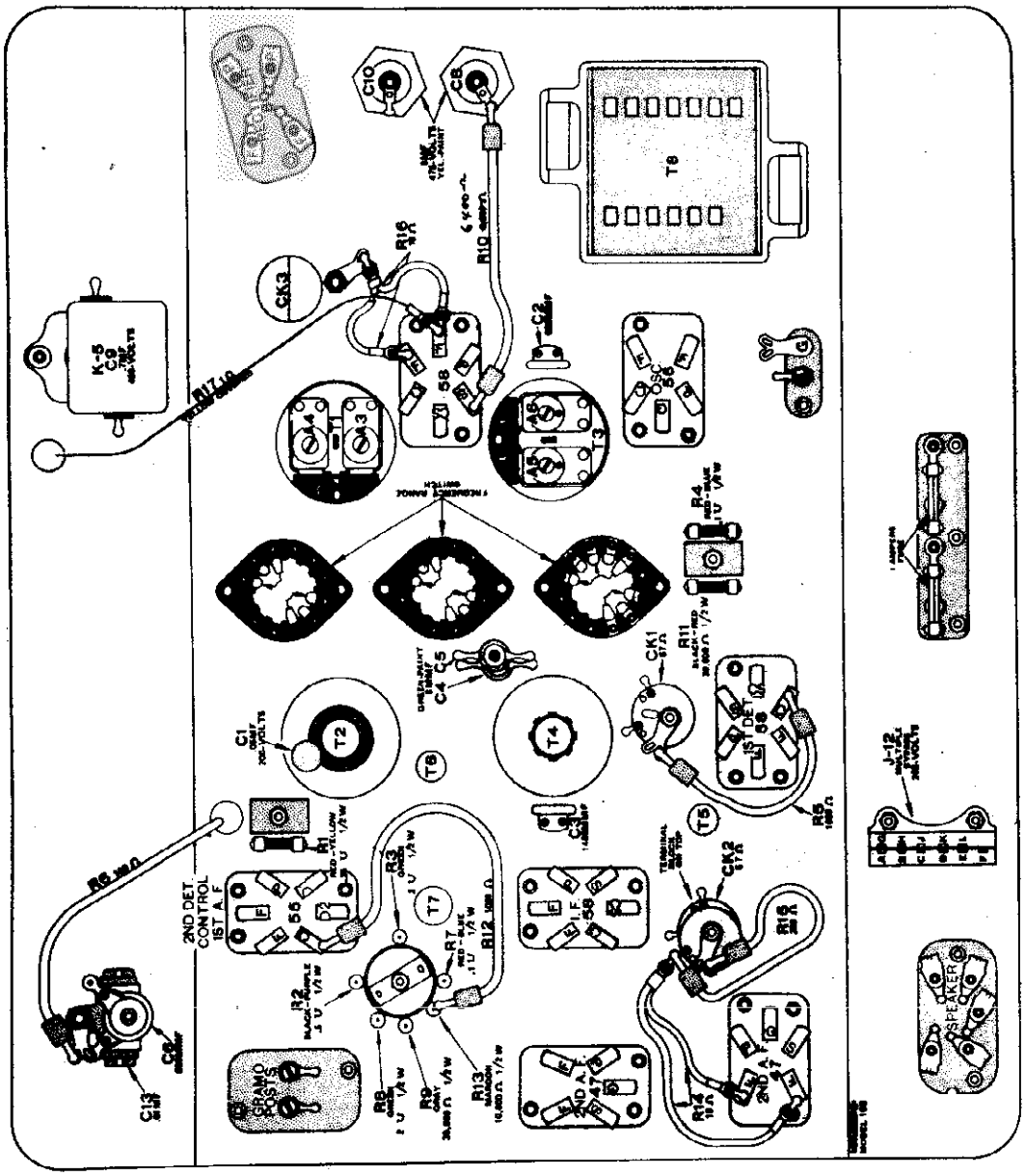

©John F. Rider, Publisher

MODELS 184,184X
Schematic

ATWATER KENT MFG. CO.

Model 184, 110 v. 60 cycles
Model 184X, 220 v. 60 "

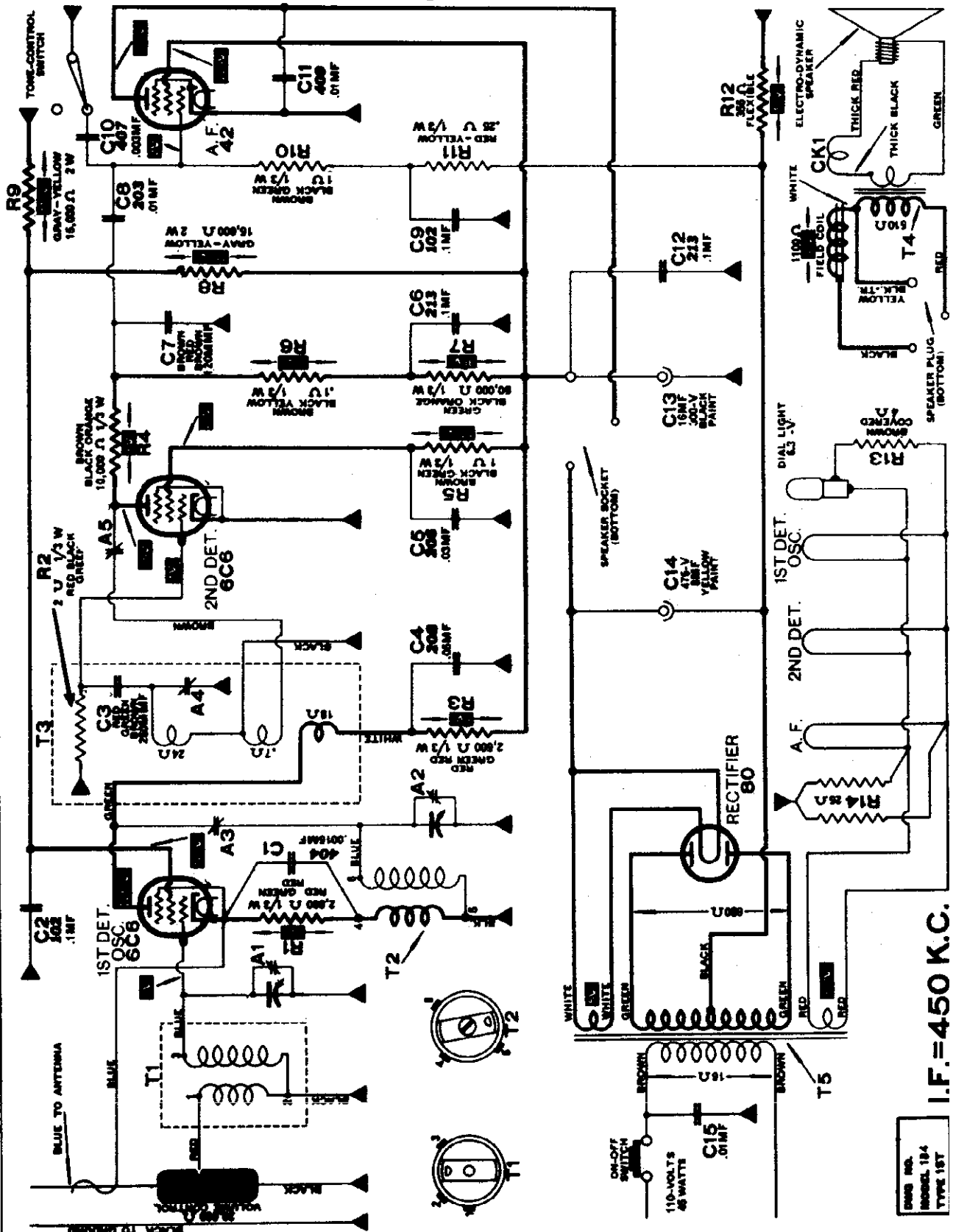

©John F. Rider, Publisher

MODEL 206D (Early)
Socket, Trimmers
Chassis

ATWATER KENT MFG. CO.

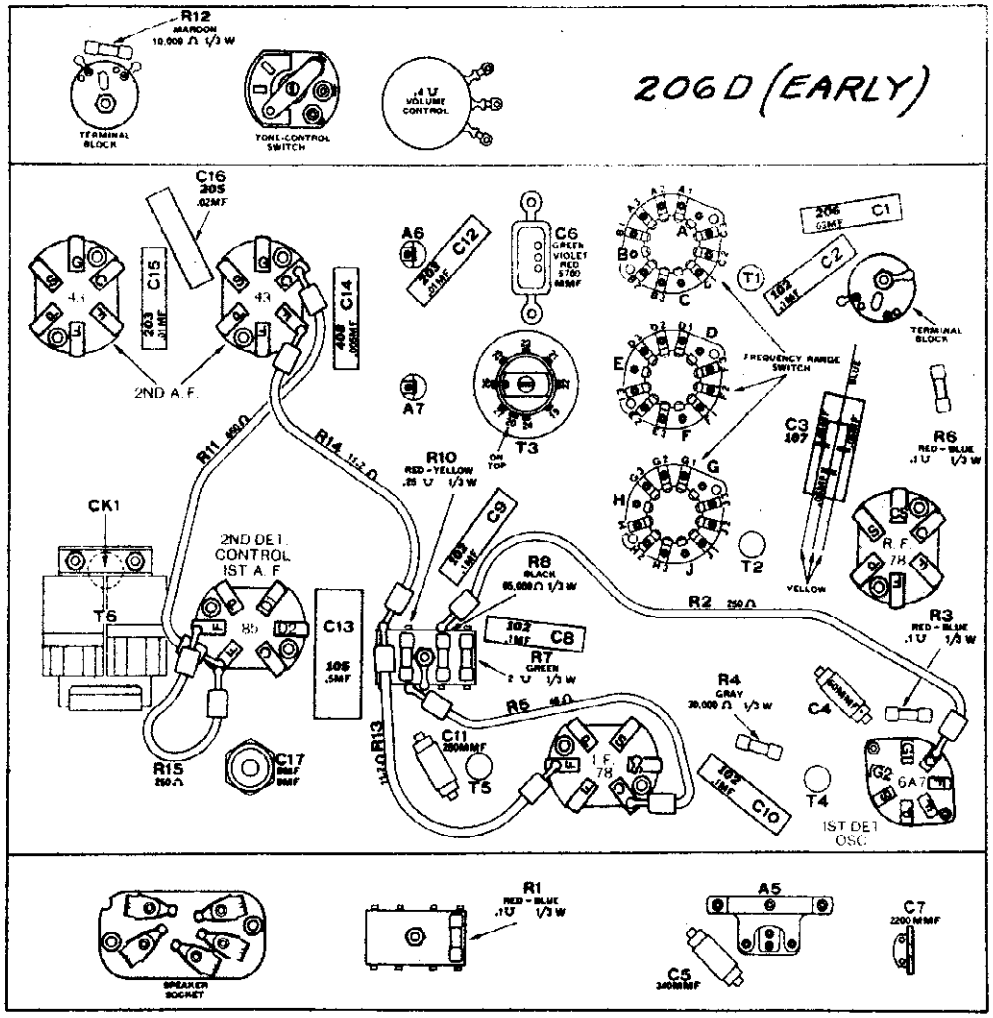

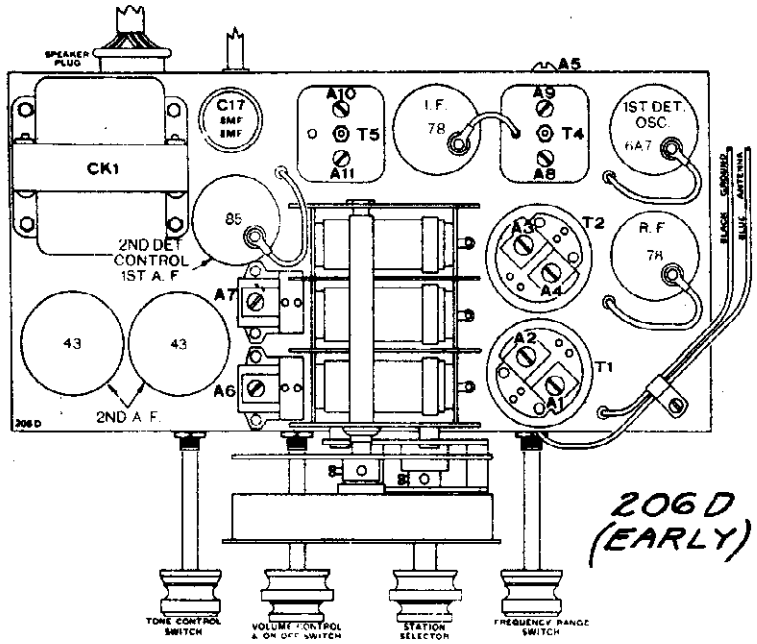

©John F. Rider, Publisher

ATWATER KENT MFG. CO.

MODEL 206D (Early
Schematic

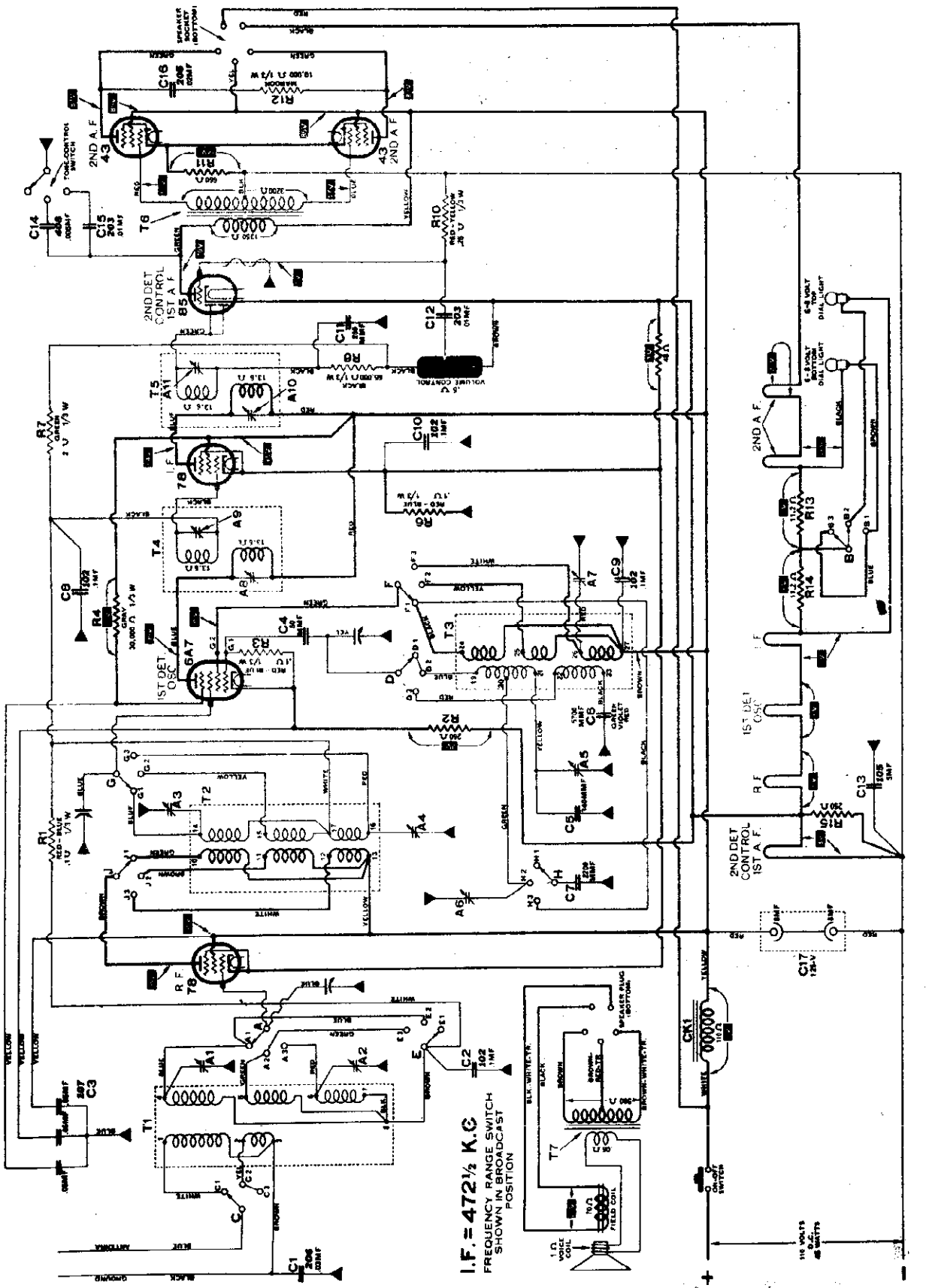

©John F. Rider, Publisher

MODELS 206D, 376D
(Late)
Schematic

ATWATER KENT MFG. CO.

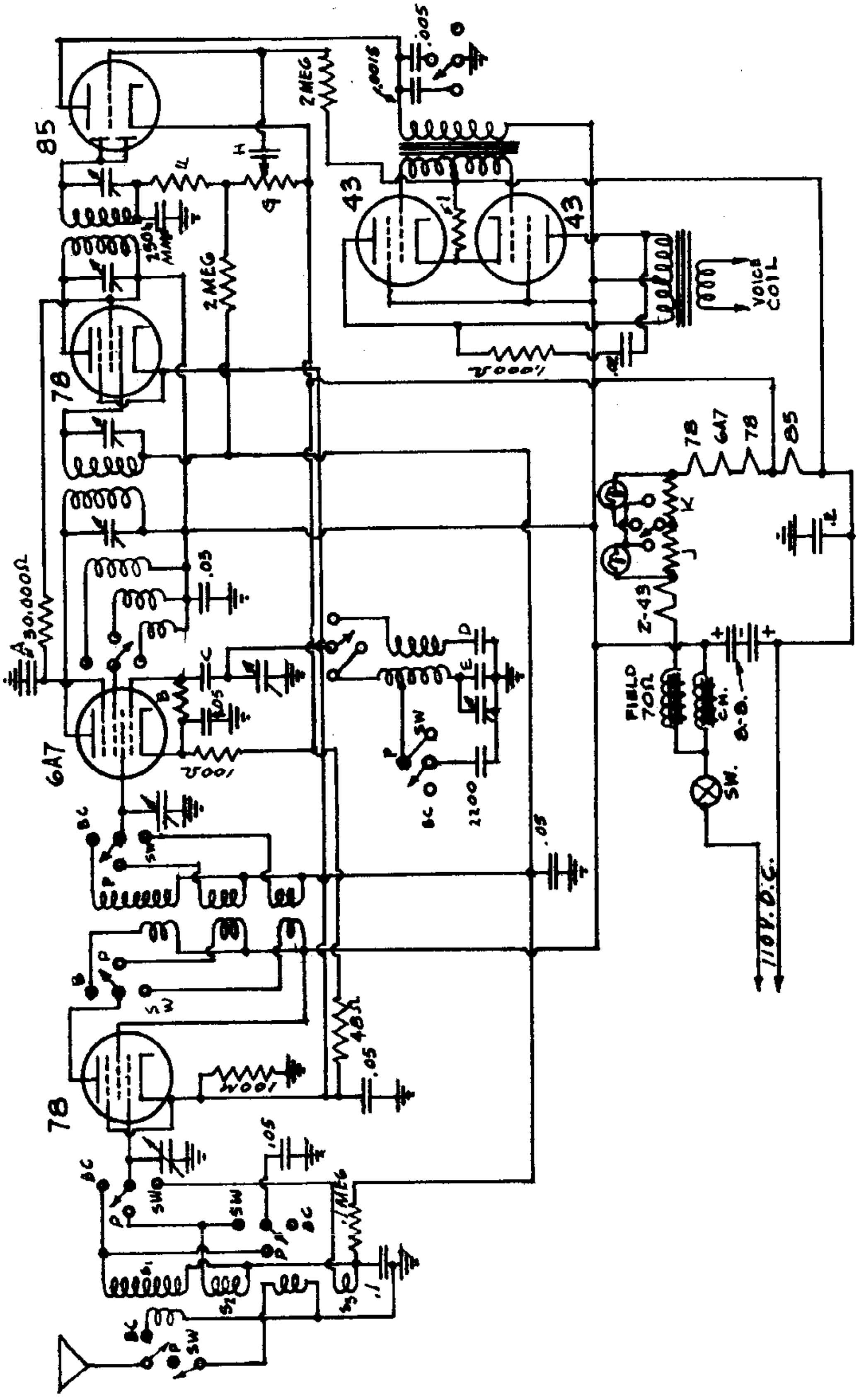

©John F. Rider, Publisher

ATWATER KENT MFG. CO.

MODEL E-206
Schematic

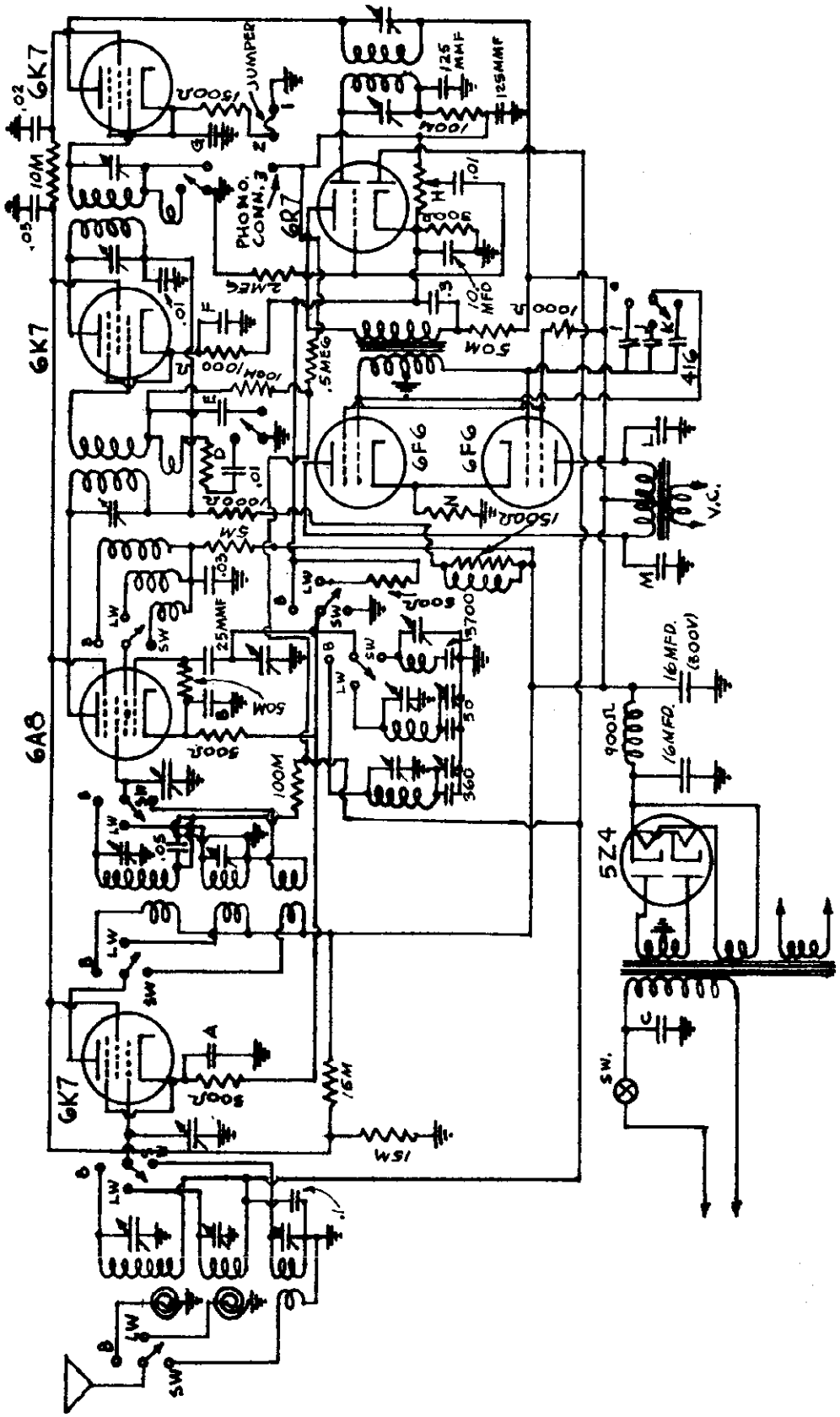

©John F. Rider, Publisher

MODEL 87-D
Change
MODELS 217, 427, 667, 708, 808, 808A
Changes

ATWATER KENT MFG. CO.

MODEL 87-D

INSTRUCTIONS FOR INSTALLING No. 24340 RESISTOR IN PLACE OF No. 23840 AND
INSTRUCTIONS FOR INSTALLING No. 25980 & No. 25990 IN PLACE OF No. 19850

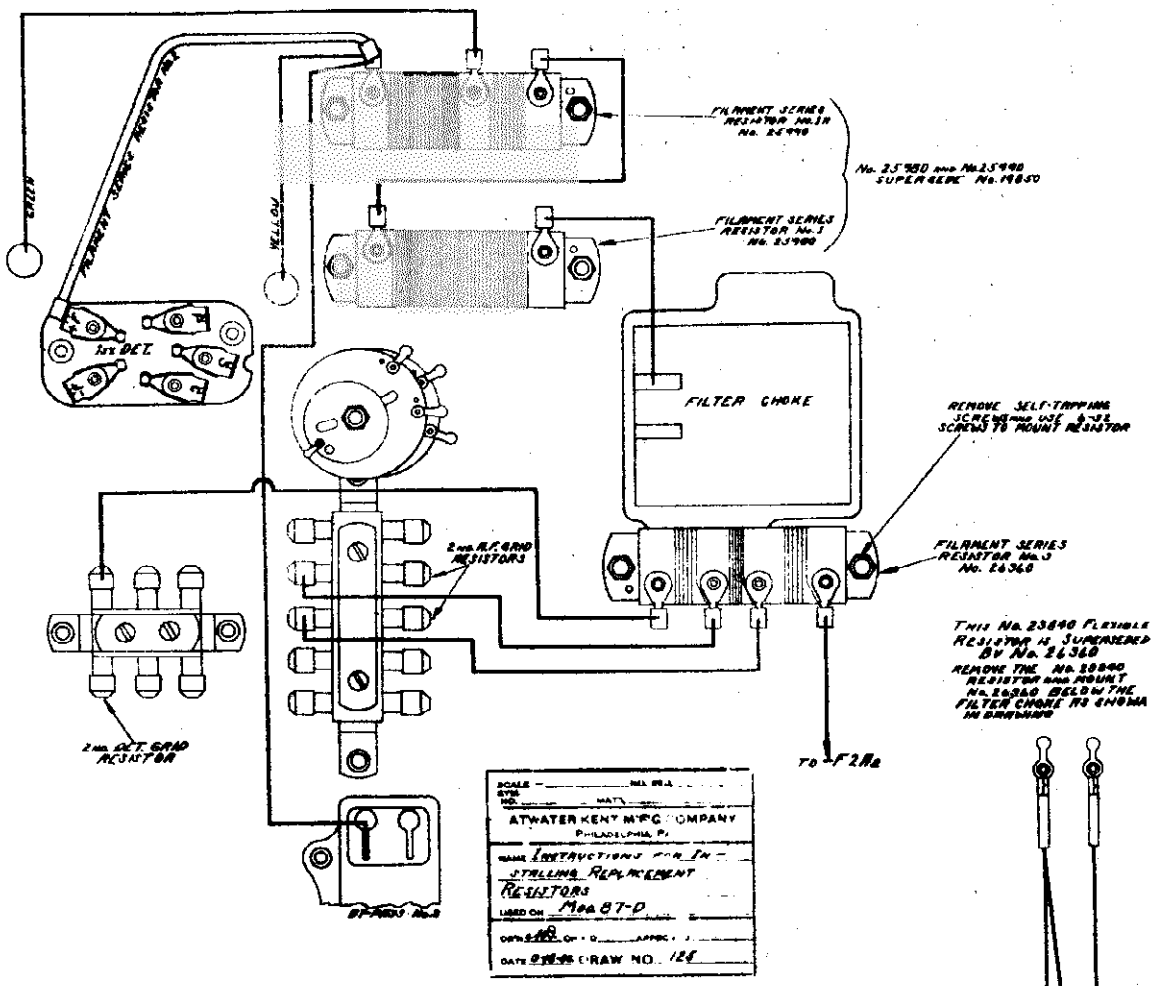

IMPROVING TONE QUALITY IN MODELS 217, 427, 667, 708, 808, and 808A

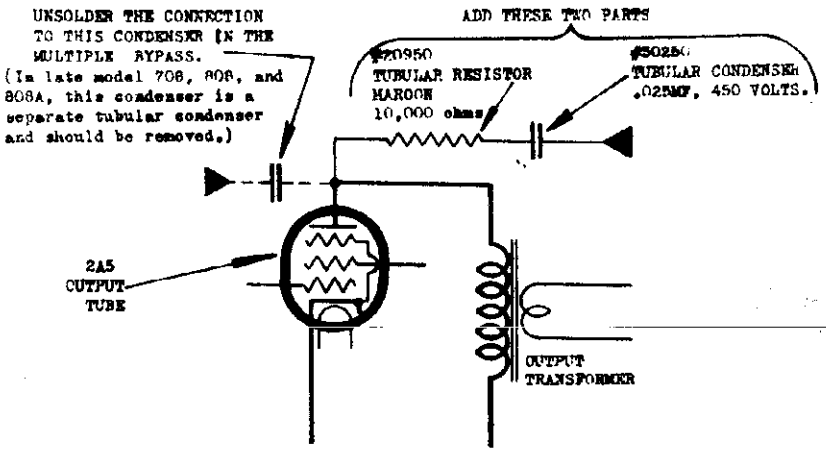

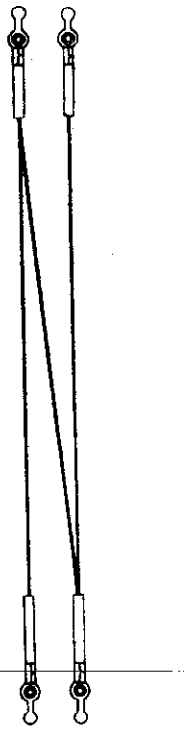

To improve the tone quality of Models 217, 427, 667, 808, 808A, and 708, remove the connection to the original quality condenser on the plate of the 2A5 output tube, and add a #20950 10,000 ohm resistor and a #30250 tubular condenser (.025MF) as shown above.

MODELS F216,P53
Schematic

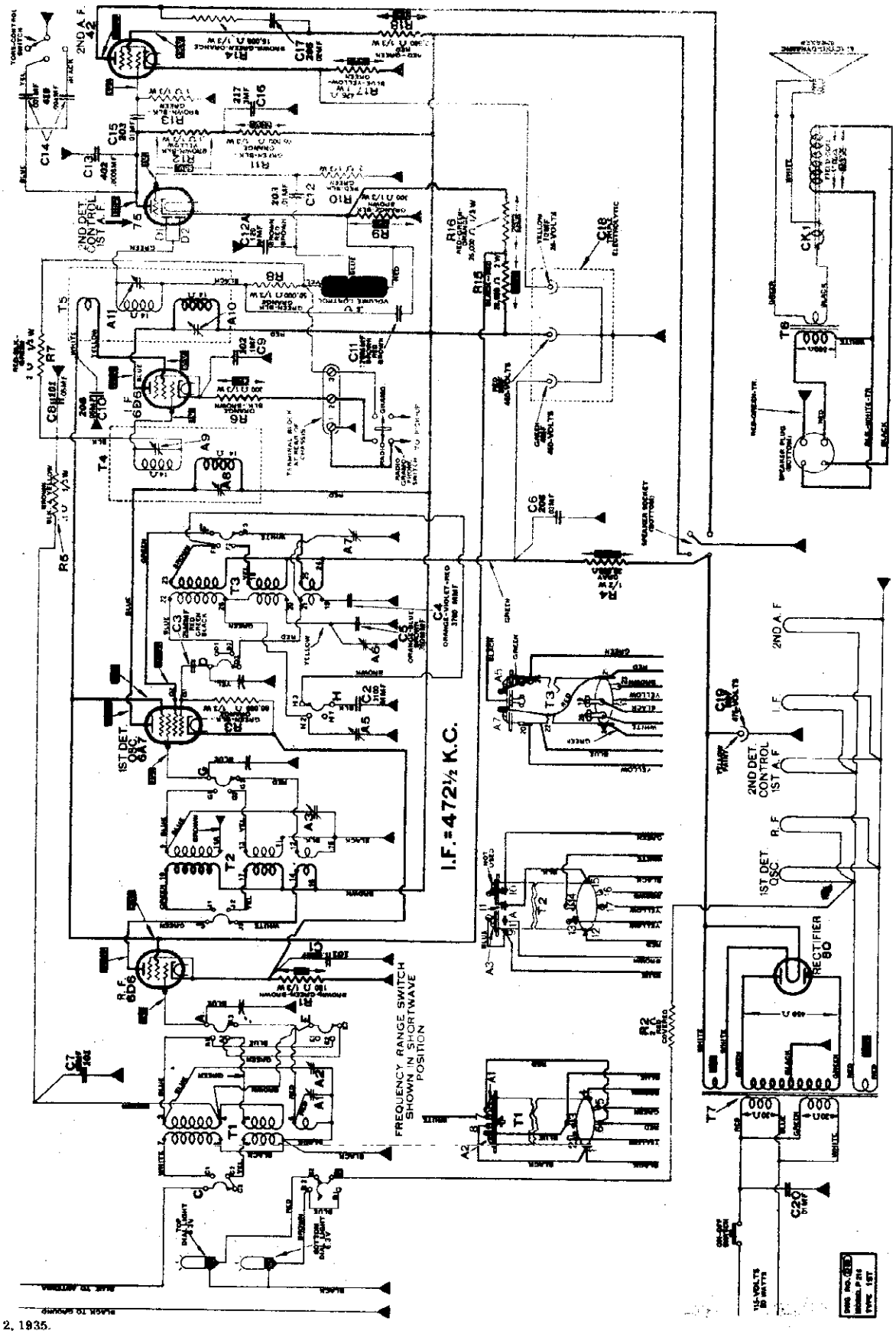

August 2, 1935.

©John F. Rider, Publisher

MODELS P216,P336
Socket,Trimmers
Chassis,Alignment

ATWATER KENT MFG. CO.

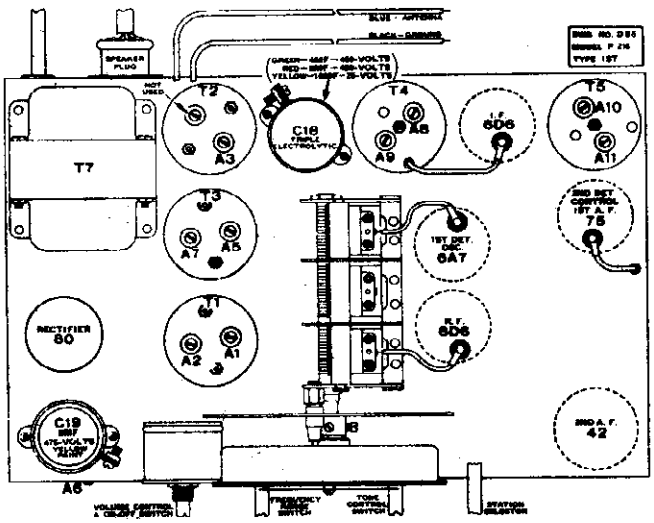

ADJUSTING TRIMMER CONDENSERS

Refer to general notes on trimmer-condenser adjustment published in previous supplements. Remember always to use the weakest possible oscillator signal that will give a reading on the output meter with the radio volume control full "on", and the radio tone control at high pitch. Use the first spot on oscillator trimmer, as it is screwed in from a loose or minimum-capacity position. Use the standard Atwater Kent I. F. coupling unit No. 42590. Note that no balancing resistors are used in aligning the I. F. trimmers on these particular models.

I. F. TRIMMERS.

Connect test oscillator (472½ KC) to I. F. tube by means of regular I. F. coupling unit. Peak A10, A11. Connect oscillator to 1st-detector tube and peak A8, A9.

DIAL POINTER ADJUSTMENT.

With rotor of variable condenser fully meshed, dial indicator should be at 535 KC.

R. F. TRIMMERS.

Connect an R. F. oscillator to antenna and ground of set.

Short-wave range. With oscillator and dial at 15 MC, peak A7, A1.

Police range. No trimmers on this range.

Broadcast range. With oscillator and dial at 1500 KC, peak A5, A3, A2. With oscillator and dial at 560 KC, peak A6.

August 2, 1935.

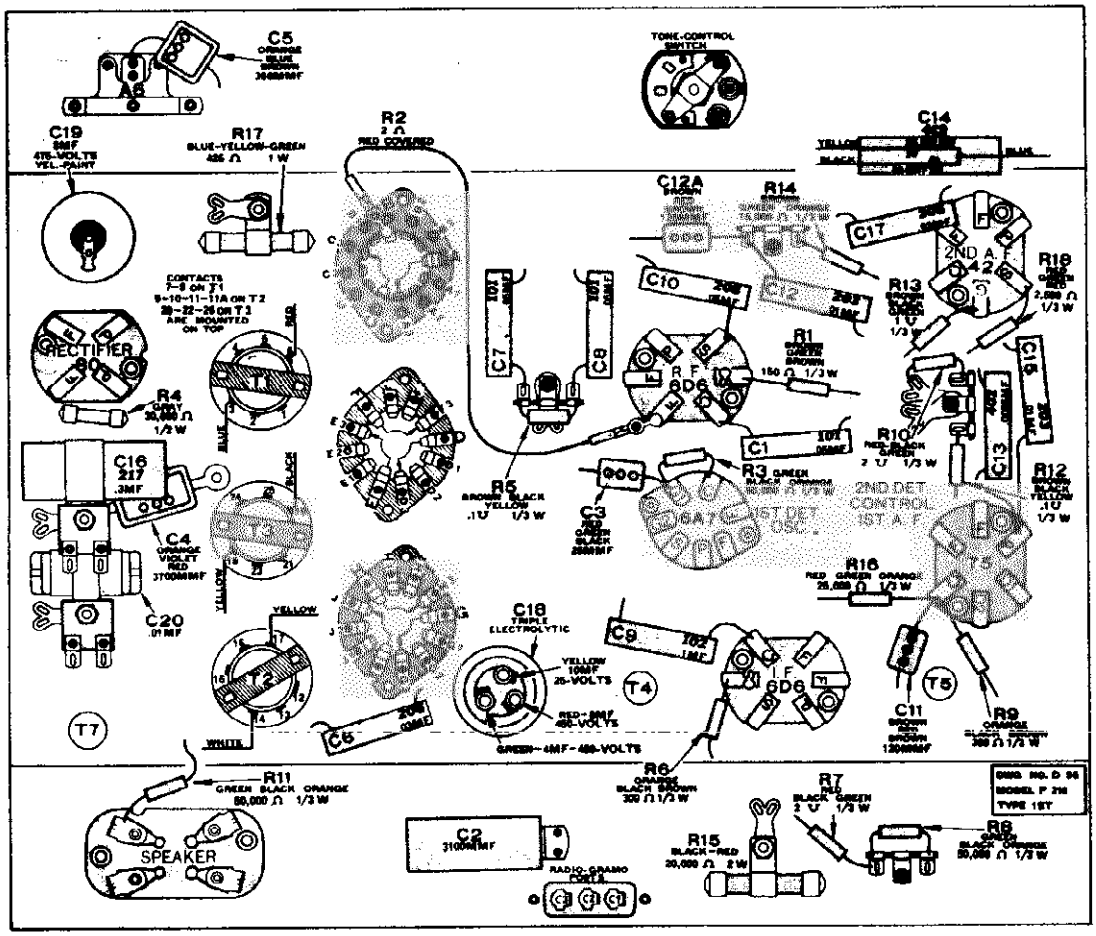

©John F. Rider, Publisher

MODEL 23
Schematic

ATWATER KENT MFG. CO.

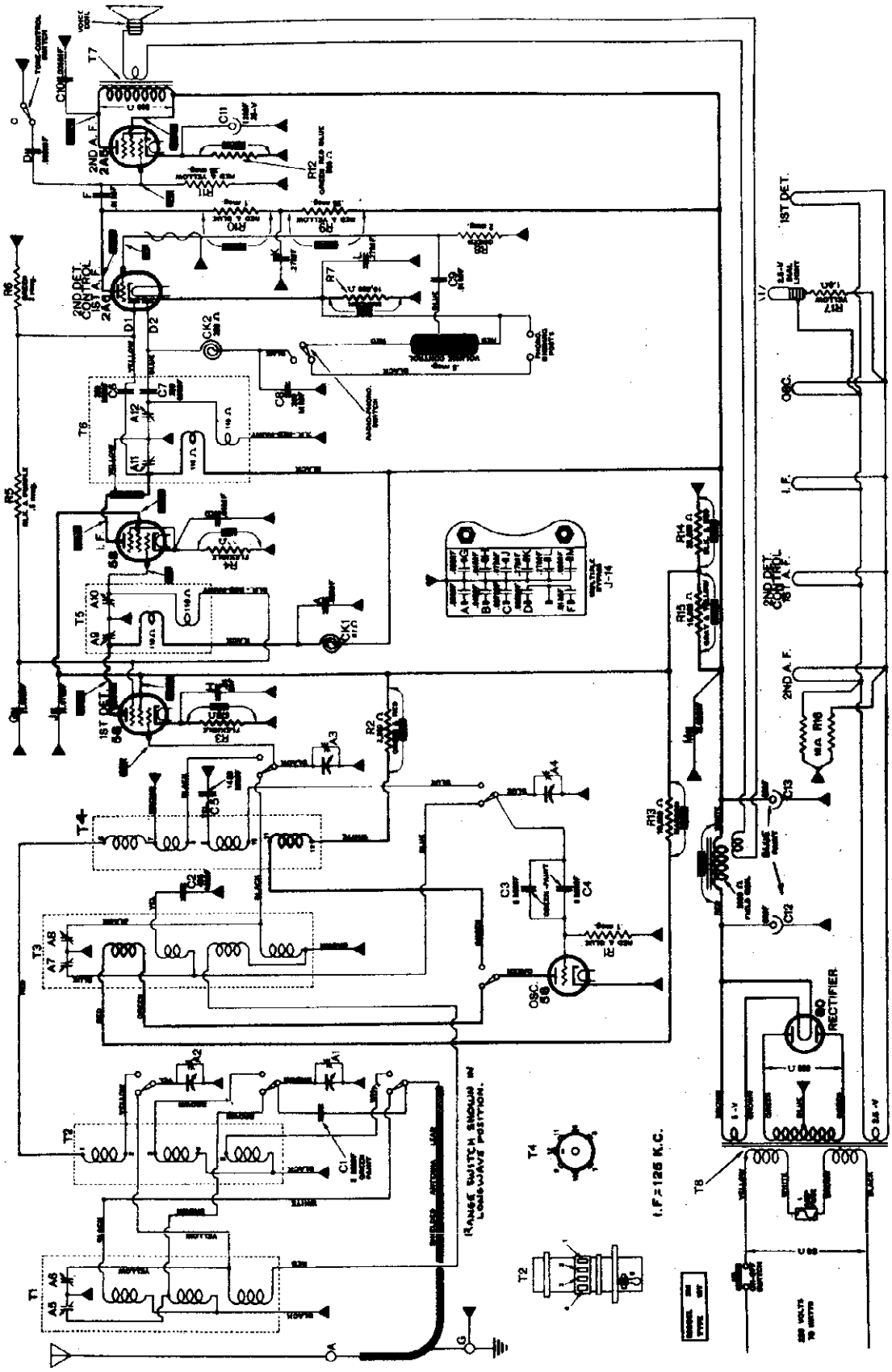

©John F. Rider, Publisher

MODEL 236
Socket, Trimmers
Chassis

ATWATER KENT MFG. CO.

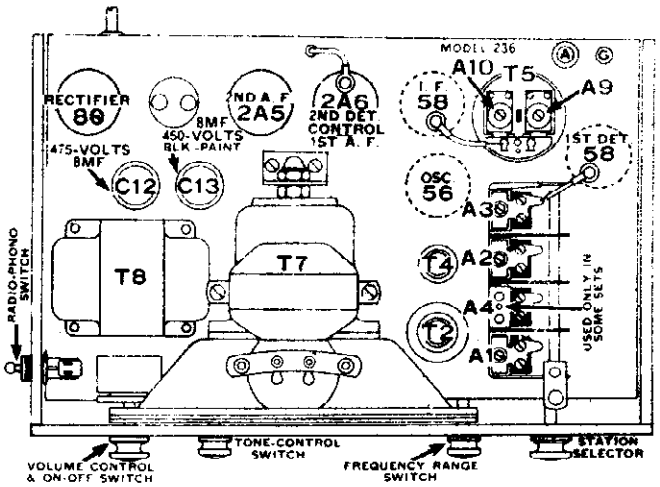

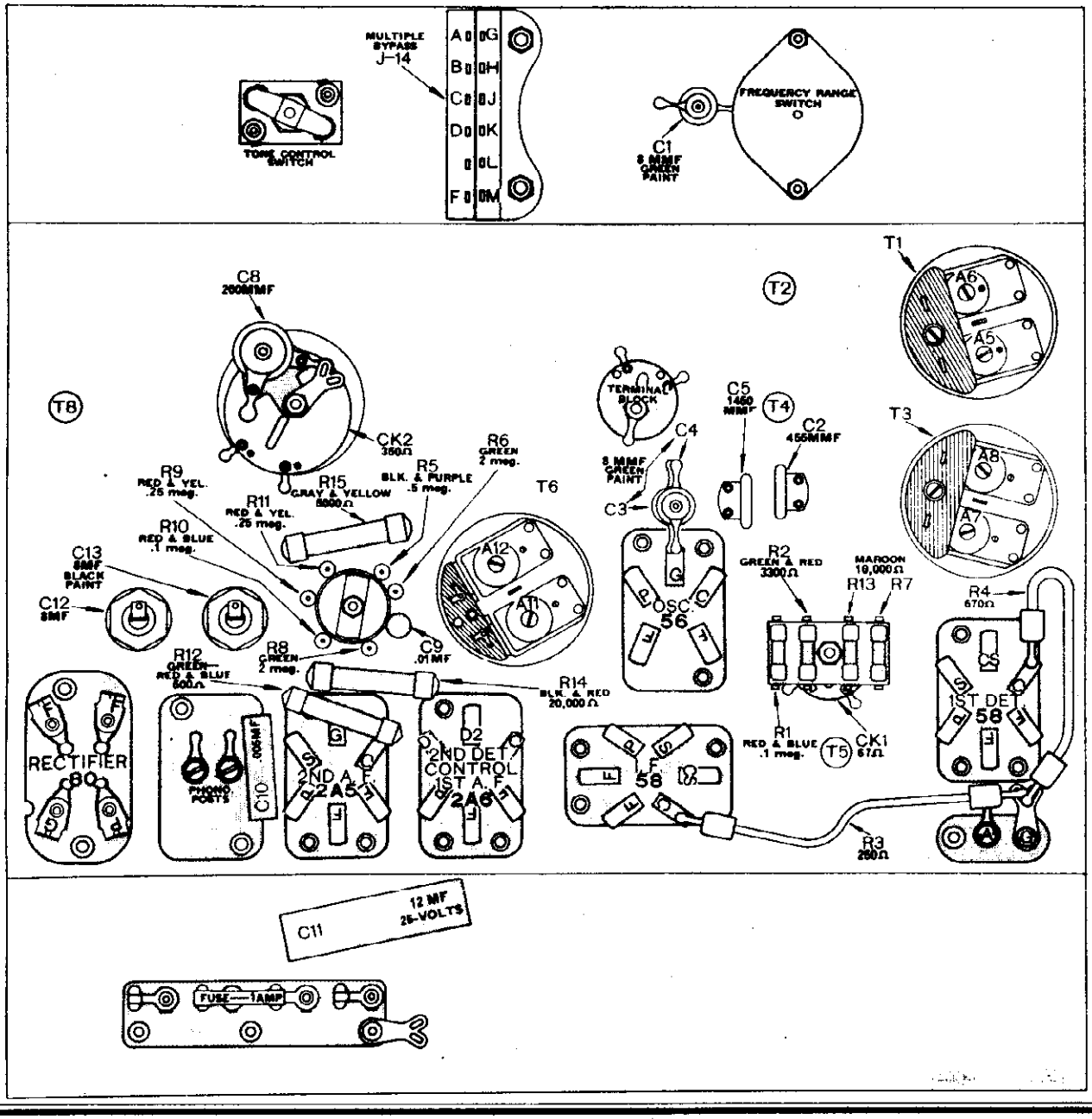

©John F. Rider, Publisher

ATWATER KENT MFG. CO.

MODEL 255
Schematic

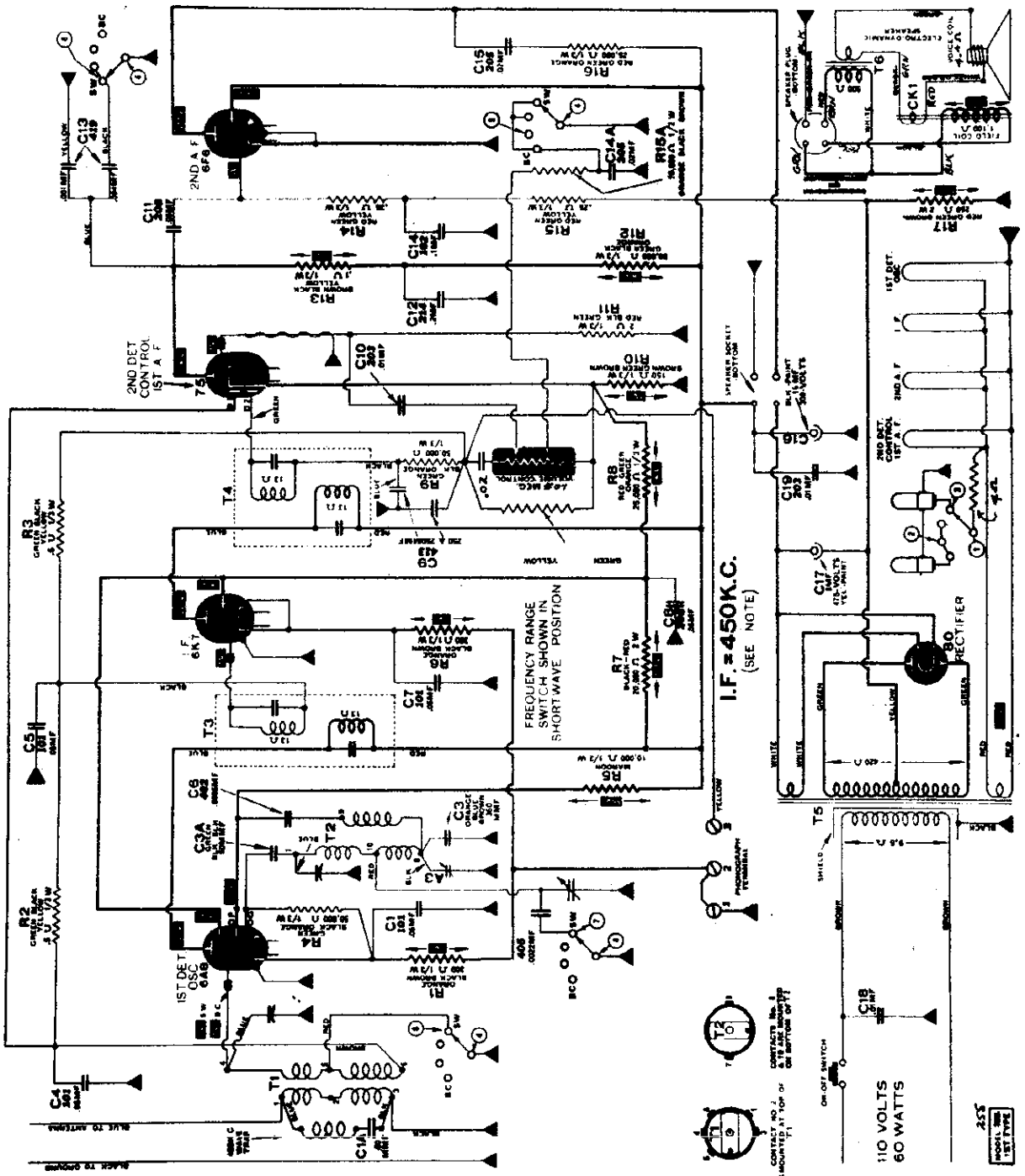

©John F. Rider, Publisher

MODEL 278D
Schematic

ATWATER KENT MFG. CO.

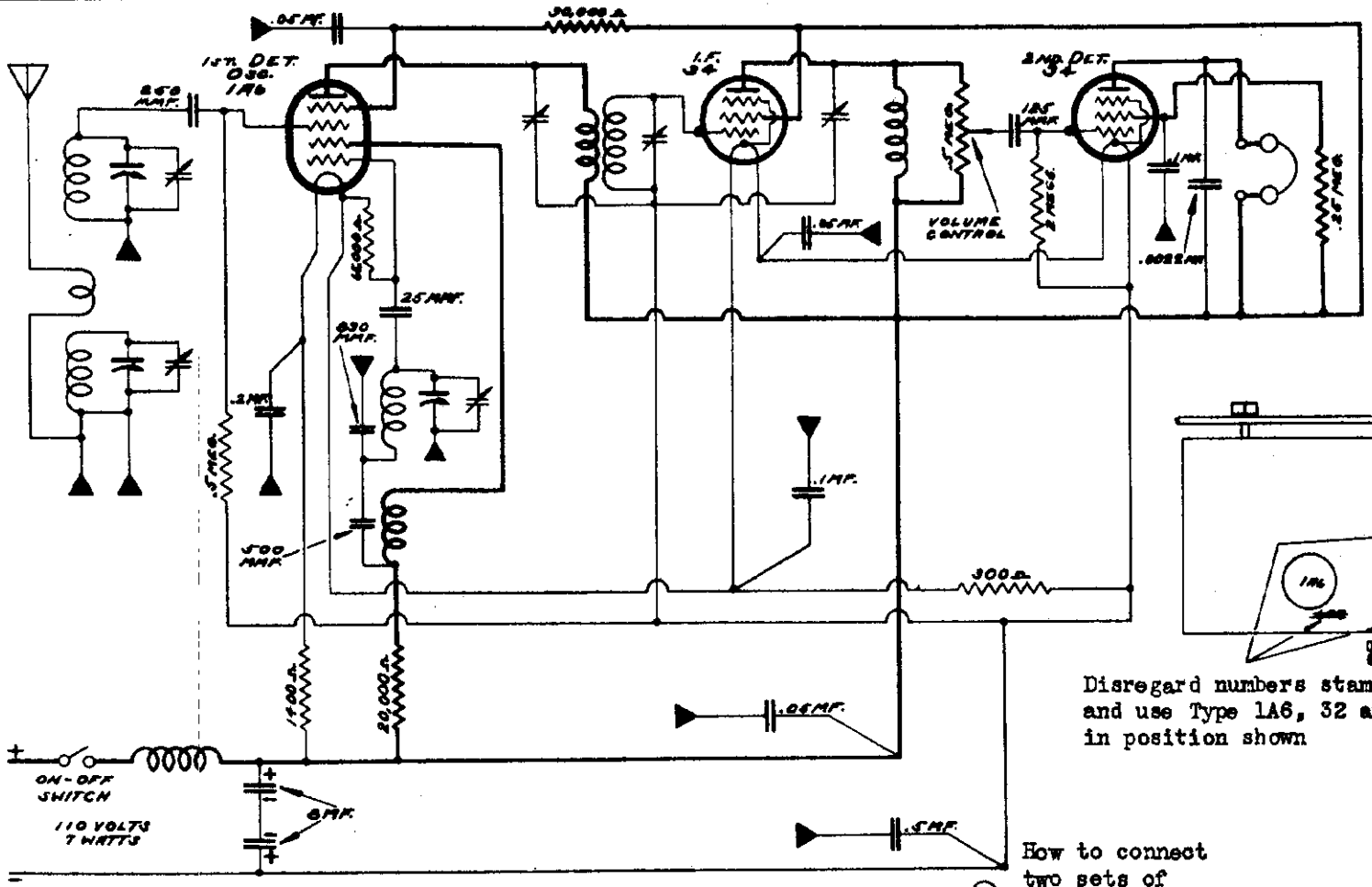

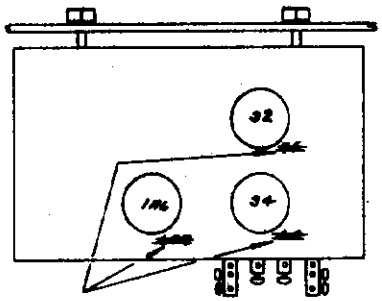

Disregard numbers stamped on base and use Type 1A6, 32 and 34 tubes in position shown

How to connect two sets of headphones

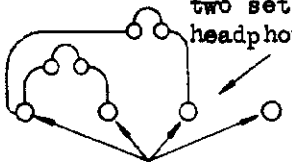

Binding Posts on rear of set

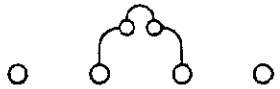

How to connect one set of headphones

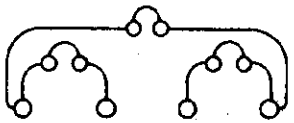

How to connect three sets of headphones

ATWATER KENT MFG COMPANY PHILADELPHIA PA	
NAME	SCHEMATIC DIAGRAM OF 110 VOLT - 278-D SET. SET No. 39800
USED ON	
DRAWN	LAID OUT APPROVED
DATE	8-7-34 DRAW. NO. 100-B

The 110 volt plug must be inserted correctly in Electric Outlet. If the set does not operate, reverse the plug.

USING 2-VOLT AIR CELL, 2-VOLT STORAGE CELL OR 3-VOLT DRY "A" BATTERIES

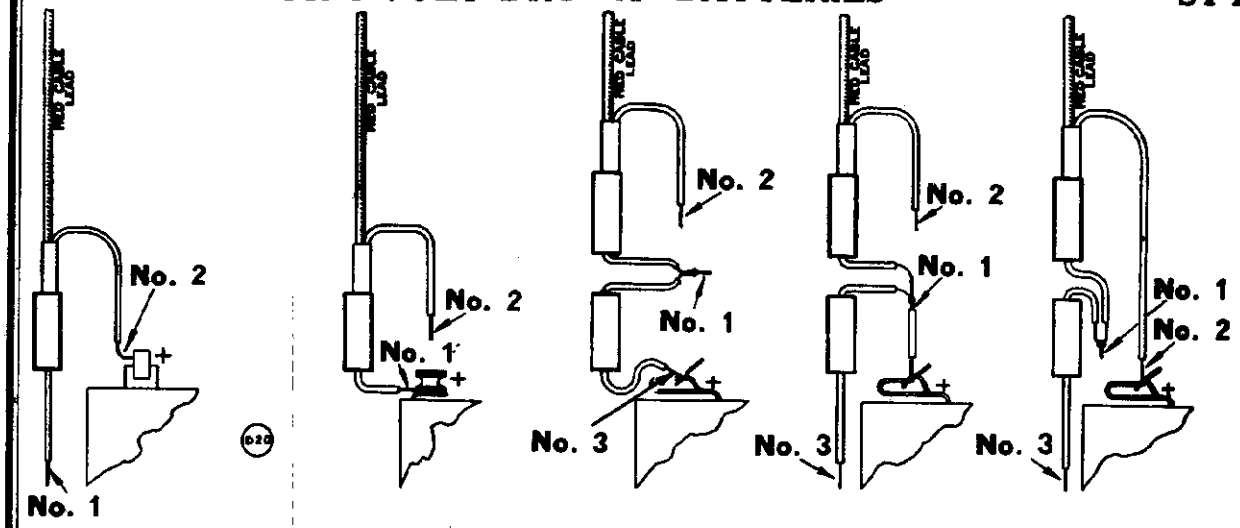

2-VOLT STORAGE CELL
Connect No. 2 as shown, do not use No. 1

2-VOLT AIR CELL
Connect No. 1 as shown, do not use No. 2

Connections when battery is fresh | Connections after 300 hours' use | Connections after 600 hours' use

3-VOLT DRY "A" BATTERY
It is necessary to connect an extra resistor as shown when using a 3-volt dry "A" battery. This resistor is available through Atwater Kent distributors.

The extra resistor required when using a 3-volt dry "A" battery is Atwater Kent part No. 40340, 1.03 ohms.

SPEAKER ADJUSTMENT

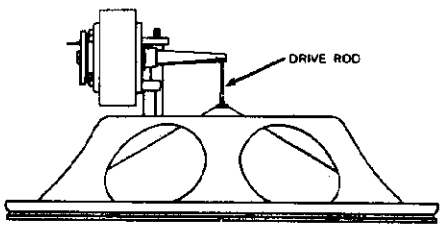

There are no adjustments for centering the armature in the magnet gap. If the coil becomes open, or if adjustment is required, it is necessary to replace the complete sound unit No. 29076.

The diaphragm is clamped to the drive rod between two nuts. When installing a new diaphragm or unit turn the rear nut back on the drive rod, fasten the diaphragm or unit to cone housing, and turn rear nut forward until it touches apex of diaphragm. Put the front nut on drive rod and fasten securely.

IMPORTANT INSTALLATION NOTES FOR MODELS 237Q AND 467Q

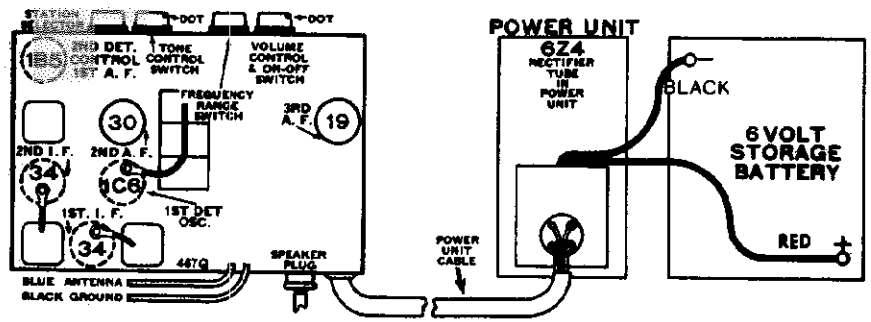

Do not lengthen the leads from the power unit to the storage battery, as this will cause excessive hum.

The spring clips must make good contact to the storage battery terminals. File and clean the battery terminals when necessary to ensure good contact.

Connections between the chassis, power unit, and storage battery are shown above.

Keep the antenna lead-in as far as possible from the power unit, power-unit cable, and storage battery.

March 25, 1936

MODELS 285Q, 415Q, MODELS 237Q, 467Q, MODELS 657Q, 747Q, MODELS 485Q, 515Q

Parts Lists

ATWATER KENT MFG. CO.

MODELS 285Q AND 415Q

30044	Cabinet with screen (415Q)	
29451	Screen (415Q)	
29783	Escutcheon and crystal assem.	
29531	Vol. control, .5 U	
44430	Tone control switch assem.	
30045	Shaft and blade for the above	
29427	Var. cond. assem.	
29441	Dial holder	
29456	Dial plate (415Q)	
29977	Dial plate (285Q)	
29417	Drive shaft	
30042	Plate assembly for shaft	
17961	Dial rubber and bushing	
27692	Tuning gear	
29054	Male plug assem.	
29055	Female plug assem.	
31168	Battery cable set-end (415Q)	
31487	Battery cable and plug, battery end (285Q)	
31219	Battery cable and plug, battery end (415Q)	
29472	Battery cable tag, F-1253	
28827	Pilot light socket assem.	
26721	Pilot lamp, 2-V., .06 amp.	
22683	Tube shield (1st det.)	
28614	Tube shield (2nd A. F.)	
29282	Tube shield (I. F.)	
29468	Inst. sheet, F-1250	
45030	Shipping container	

TRANSFORMERS

T1	44780	No. 1 R. F. T.
T2	44790	Oscillator T.
T3	44880	No. 1 I. F. T.
T4	44890	No. 2 I. F. T.

RESISTORS

R12	47120	.25 Ω, flexible (415Q)
R12	47210	.43 Ω, flexible (285Q)
	40340	1.03 Ω, 3-V. dry battery resistor

CONDENSERS

C3	29532	120 MMF, 450-V.
C12	29529	8 MF, 200-V.

TRIMMERS

A3, 4	29119	Double trimmer on T3
A5, 6	29119	Double trimmer on T4

SOCKETS

24494	6-prong (1C6)
21336	4-prong (speaker)
24493	5-prong (33)
24492	4-prong (32, 30)

285Q SPEAKER No. 49900
415Q SPEAKER No. 48500

29076*	Speaker unit	
29077	Drive rod	
31207	Cable and plug assem.	
29075	Diaphragm	

* Parts for this unit are not sold separately.

MODELS 237Q AND 467Q

30046	Cabinet with screen (237Q)
29983	Gasket and screen (237Q only)
29759	Escutcheon and crystal
28961	Volume control, .5 U
42750	Tone control switch assembly
29101	Shaft and blade for above
28986	Range switch
31349	Variable condenser assembly
40090	Dial light socket assembly
26721	Dial light, 2-V., 60 MA
31354	Dial plate (237Q)
31355	Dial plate (467Q)
31606	Dial plate holder
22683	Tube shield (1C6, 1B5)
15213	Tube shield (34)
29547	Coil shield (T2, 3)
29619	I. F. T. shield (T4, 5, 6)
31553	Cable and plug (chassis to power unit)
31634	Cable plug only
29874	Instruction sheet, F-1276
48790	Shipping container (237Q)
48810	Shipping container (467Q)
31006	Base cover (467Q only)

TRANSFORMERS

T1	47460	Broadcast pre-selector
T2	47470	1st-detector transformer
T3	47480	Oscillator transformer
T4	48610	No. 1 I. F. T.
T5	48620	No. 2 I. F. T.
T6	48630	No. 3 I. F. T.
T7	47840	Audio input transformer
T8	48480	Power transformer (S-375)

ELECTROLYTICS

C2	29529	8 MF, 200-V.
C22	31551	50 and 50 MF, 6-V.
C26	31552	10 and 10 MF, 200-V.

RESISTORS

R16	31546	63 Ω, blue-orange-black
R17	31546	63 Ω, blue-orange-black
R18	31547	15 Ω, brown-green-black
R20	31547	15 Ω, brown-green-black
R21	31547	15 Ω, brown-green-black
R22	31545	7 Ω, black-violet-black
R24	31548	30 Ω, orange-black-black

TRIMMERS

44570	Double R. F. trimmer
29823	Double I. F. trimmer
39630	Broadcast tracking trimmer (A4)

SOCKETS

26985	624 socket
24492	Vibrator socket
21336	Power supply socket
24492	4-prong tube socket
24494	6-prong tube socket (1C6, 1B5)
21336	Speaker socket
18449	Fuse socket

CHOKES

CK1	36630	Filament choke
CK2	31587	R. F. choke
CK3	36610	R. F. choke
CK4	31573	A. F. choke

POWER UNIT

48590	Power unit complete with tube
31568	Power unit container
26094	Power unit container lid
31495	Power unit auxiliary container
48290	Relay assembly
31554	Vibrator
31565	"A" terminal clip
26046	Power trans. mounting bracket
23774	3-amp. fuse

657Q AND 237Q SPEAKER No. 50700

29076*	Sound unit complete	
29077	Drive rod	
31231	Cable and plug assem.	
31853	Inst. sheet, F-1322	
49470	Shipping container (515Q)	
49460	Shipping container (485Q)	

TUNING PARTS

29417	Shaft
30042	Plate assembly
17961	Dial rubber
27692	Tuning gear
31927	Indicator disc with bushing
31875	Dial and holder assem.
31818	Dial holder
15079	Plug only
29075	Diaphragm assem.
19469	Segment

747Q AND 467Q SPEAKER No. 50800

29076*	Sound unit	
29077	Drive rod	
31231	Cable and plug assem.	
15079	Plug only	
29075	Diaphragm assem.	
19469	Segment	

* Parts for this unit are not sold separately.

MODELS 657Q AND 747Q

30046	Cabinet with screen (657Q only)	
29983	Gasket and screen (657Q only)	
29759	Escutcheon and crystal assem.	
31734	Volume control, .5 U	
42750	Tone control switch assembly	
29101	Shaft and blade for above	
28986	Range switch	
31349	Variable condenser assembly	
40090	Dial light socket assembly	
26721	Dial light, 2-V., 60 MA	
31713	Dial plate (657Q only)	
31714	Dial plate (747Q only)	
31606	Dial plate holder	
22683	Tube shield (1B5, 1C6)	
15213	Tube shield (34)	
29547	Coil shield (T2, 3)	
29619	I. F. T. shield (T4, 5, 6)	
49240	Shipping container (657Q)	
49250	Shipping container (747Q)	
31703	Instruction sheet, F-1312	
27695	Battery cable tag, F-1155	
31006	Base plate (747Q)	

TRANSFORMERS

T1	47460	Broadcast pre-selector
T2	49210	1st detector
T3	47480	Oscillator
T4	48610	No. 1 I. F. T.
T5	48620	No. 2 I. F. T.
T6	48630	No. 3 I. F. T.
T7	47840	Audio input trans.

TRIMMERS

44570	Double R. F. trimmer
29823	Double I. F. trimmer
39630	Broadcast tracking trimmer (A4)

ELECTROLYTICS

31552	10 MF and 10 MF, 200-V.

MODELS 485Q, 515Q

30084	Cabinet with screen (515Q)	
31622	Gasket and screen assem. (515Q)	
29759	Escutcheon and crystal	
31768	Var. condenser	
29531	Vol. control, .5 U	
45370	Tone control switch	
31851	Range switch	
31865	Battery cable (515Q)	
31866	Battery cable (485Q)	
31401	Tube shield (halves) (1A4)	
31402	Tube shield cap	
31993	Centering plate (485Q)	
31994	Screw for the above	
29619	I. F. T. shield	
31857	Battery cable tag, F-1326	
22683	Tube shield (1C6)	
31859	"C" battery plug, 5-prong	
31858	"B" battery plug, 3-prong	
31871	Dial spacer (red rubber, 4 used)	
31839	Dial gasket	
31814	Dial only	
31819	Light shield ring	
31864	Reflector only	
31822	Snap eyelets	
49520	Pilot light socket assem.	
26721	Pilot lamp, 2-V., 60 mils.	

KNOBS

28946	Knob (without dot)	
28947	Knob (with dot)	
32036	Knob (rel., red, dot)	
28063	Knob spring	

TRANSFORMERS

T1	49530	No. 1 R. F. transformer
T2	49570	Oscillator transformer
T3	49540	No. 1 I. F. transformer
T4	49550	No. 2 I. F. transformer
T5	48630	No. 3 I. F. T.
	49330	Wave trap assem.

RESISTORS

R17	47120	.25 Ω (515Q)
R17	47210	.43 Ω (485Q)
	40340	1.03 Ω, wire wound, for use with a 3-V. "A" battery

CONDENSERS

C4	29589	360 MMF
C5	29603	50 MMF
C11, 13	29687	120 MMF
C15	29606	25 MMF
C20	29529	8 MF, 200-V.

(C20 is 8 MF, 475-V., No. 28031 in some sets.)

CHOKES

CK1	36630	48-turn choke

TRIMMERS

A1	31845	On wave trap
A2	28843	Front of chassis
A3	39630	Rear of chassis
	29823	On T3, T4, T5

SOCKETS

21336	Speaker
24494	6-prong
24493	5-prong
24492	4-prong

485Q SPEAKER No. 55600
515Q SPEAKER No. 55500

29076*	Sound unit	
29077	Drive rod	
31914	Cable and plug assem. (515Q)	
31916	Cable and plug assem. (485Q)	
15079	Plug only	
29075	Diaphragm assem.	
19469	Segment	

* Parts for this unit are not sold separately.

RESISTORS

R25	47120	.25 Ω (in 657Q)
R25	47210	.43 Ω (in 747Q)
	40340	Dry cell battery resistor, 1.03 Ω

SOCKETS

24492	4-prong socket
24494	6-prong socket (1C6, 1B5)
21336	Speaker socket

CHOKES

CK1	36630	Filament choke

BATTERY CABLES

31759	Cable and plug (set end), 747Q
31761	Cable and socket (bat. end), 747Q
31756	Cable and plug (set end), 657Q
31757	Cable and socket (bat. end), 657Q
29056	Battery-cable plug only
29057	Battery-cable socket only

SPEAKERS

Refer to list under Models 237Q and 467Q.

TUNING MECHANISM
MODELS 237Q, 467Q, 657Q, AND 747Q

29501	Tuning gear bracket	
28995	Gear stop stud	
28956	Tuning gear	
27947	Dial pointer holder	
27696	Screw for above	
29758	Dial pointer	
27535	Dial pointer screw	
28116	Gear frame	
27332	Large gear (rubber tired)	
27333	Small gear (rubber tired)	
28959	Tuning shaft	
27957	Pinion gear	
27297	Pin	
27293	Detention spring	
28957	Gear stop rubber	
28937	Stop stud	
27259	Screw	

ATWATER KENT MFG. CO.

MODEL 512
Schematic

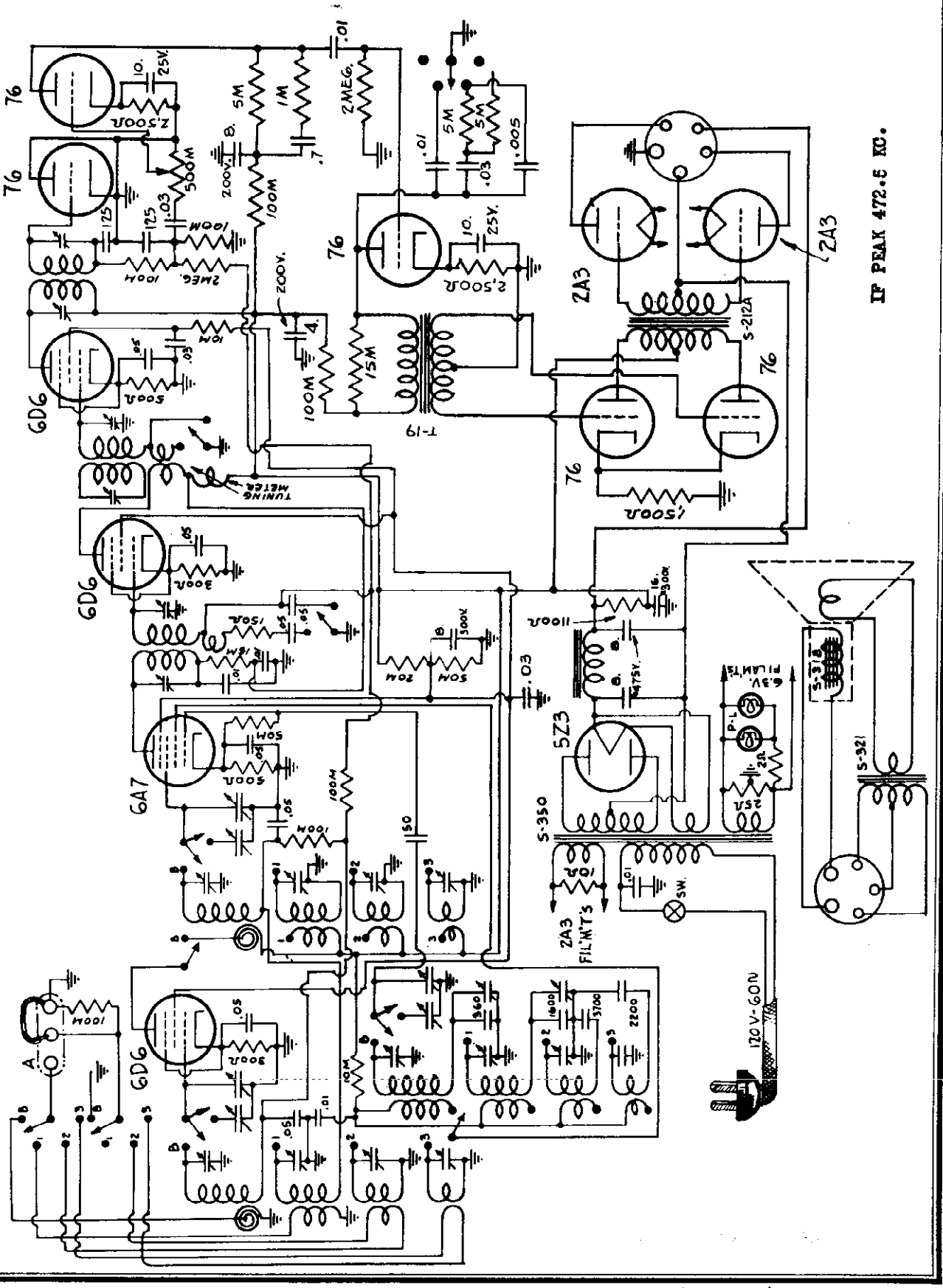

©John F. Rider Publisher

MODELS 328,P328,P328X
MODELS 412,P412,B412
MODELS 447,447X
MODELS 710,810
Parts Lists

ATWATER KENT MFG. CO.

TRANSFORMERS FOR

MODELS 312, B312, 412, B412, 710, and 810

Diagram Code Number	Name	MODEL 312 P312	MODEL B312	MODEL 412 P412	MODEL B412	MODEL 710 P710	MODEL 810 P810
T1	R.F., broadcast and 4.6 to 12.2 MC	45740	45740	45740	45740	45740	45740
T2	R.F., police and 12 to 18 MC	45770	.....	45770	.....	45770	45770
T2	R.F., long wave and 12 to 18 MC	....	46750	.....	46750	.....	.....
T3	1st-det., broadcast and 4.6 to 12.2 MC	45750	45750	45750	45750	45750	45750
T4	1st-det., police and 12 to 18 MC	45780	.....	45780	.....	45780	45780
T4	1st-det., long wave and 12 to 18 MC	....	46760	.....	46760	.....	.....
T5	Oscillator, broadcast and 4.6 to 12.2 MC	45760	45760	45760	45760	45760	45760
T6	Oscillator, police and 12 to 18 MC	45790	.....	45790	.....	45790	45790
T6	Oscillator, long wave and 12 to 18 MC	....	46770	.....	46770	.....	.....
T7	No. 1 I.F.T.	45640	45640	45640	45640	45640	47880
T8	No. 2 I.F.T.	45650	45650	45650	45650	45650	47890
T9	No. 3 I.F.T.	45660	45660	45660	45660	45660	45660
T10	Audio transformer unit	46280	46280	47640	47640	46620	48770
T11	Power transformer, 110 volts	45960	.....	47850	.....	48190	48740
T11	Power transformer, 115-230 volts	45960	45960	47850	47850	48190	48740
T12	Output transformer	46740	46740	46740	46740	44460	48780

MODEL 328

29567	Variable condenser
28618	Volume control, .5 megohm
29409	Selectivity switch
30046	Tone control switch
28906	Shaft and blade for above
47340	Range switch
25589	Shadow meter complete
30055	Front panel assembly
31288	Escutcheon
29575	Dial plate only
29848	Lamp, 6.3-V., bayonet base
27254	Dial pointer
31515	Grid lead and cap
29547	Coil shield (T1, 2)
29548	Osc. trans. shield (T3)
29619	I. F. T. shield (T4, 5, 6)
31183	Instruction sheet, F-1289
48890	Shipping container

RESISTORS

R24	46150	2 ohms, flexible
R25	45960	25 ohms, flexible

TRANSFORMERS

T1	44390	No. 1 R. F. T.
T2	44410	No. 2 R. F. T.
T3	44420	Oscillator transformer
T4	47720	No. 1 I. F. T.
T5	47730	No. 2 I. F. T.
T6	47740	No. 3 I. F. T.
T7	47770	Power trans., early (S-557)
	48980	Power trans., late (S-561)
T8	21672	Output trans. (for 41600 speaker)
	46010	Output trans. (for 54100 speaker)

TRIMMERS

29823	Double I. F. trimmer on T4 and T5
29645	Double I. F. trimmer on T6
44570	Double R. F. trimmer on T1, T2, and T3
38770	Broadcast tracking condenser (A6)

SOCKETS

21334	Speaker socket
30056	Universal socket for metal tubes

ELECTROLYTICS

C25	27592	Triple electrolytic (early sets, 4 MF, 450-V.; 8 MF, 450-V.; 10 MF, 25-V.
	31702	Triple electrolytic (late sets), 4 MF, 200-V.; 8 MF, 100-V.; 8 MF, 25-V.
C27	29691	16 MF, 475-V.
C29	29051	8 MF, 475-V. (late sets)

MODELS P328 and P328X

Model P328 is same as standard Model 328 except that it has phono terminals and a universal power transformer No. 49960

MODELS 412, P412 and B412

27321	Volume control.....
48340	Tone control switch
29409	Selectivity switch
47980	Range switch
29489	Variable condenser
29476	Dial and frame (412, P412)
31212	Dial and frame (B412)
29475	Dial (412, P412)
29844	Dial (B412)
31287	Escutcheon
25589	Shadow tuning meter
47940	Reflector
28946	Knob, without dot
28947	Knob, with dot
28349	Phono terminal card
31188	Instruction folder F-1293 (412)
31427	Instruction folder F-1304 (B412)
48930	Shipping container (412)
48940	Shipping container (B412)

TRIMMERS

39140	Strip of four trimmers
38770	Tracking trimmer (2)
44570	Double R.F. trimmer
29823	Double I.F. trimmer

SOCKETS

30058	Universal 8 prong
24492	4 prong
21337	Speaker socket

SHIELDS

29547	Shield for T1, T8
29546	Shield for T2, T4
27536	Shield for T5, T6
29619	I.F.T. shield

412 SPEAKER NO. 48900

38060	Field coil
46740	Output transformer
26243	Diaphragm

TUNING PARTS

The tuning parts are same as in Model 810

CONDENSERS

27583	16 MF, 300 V., electrolytic
29691	16 MF, 475 V., electrolytic
25584	8 MF, 300 V., electrolytic
29962	4-8 MF, 200 V., electrolytic

FILTER CHOKE

46290	Filter choke

MODELS 447 and 447X

For parts not listed below, refer to Model 518

28026	Cabinet, less screen.....
27904	Screen and gasket.....
27585	Shipping container
28224	Front panel assembly

CONDENSERS

27584	4 MF. 300 V. electrolytic
29051	8 MF. 475 V., electrolytic
25579	10 MF. 25 V., electrolytic
27598	5700 MMF.
27599	5700 MMF.

TRANSFORMERS

21672	Output transformer
28567	Power transformer (447X)
25221	Power transformer (447)

MISCELLANEOUS

21536	Speaker socket
29106	Tone control switch

447 SPEAKER NO. 41700

21280	Field coil
19465	Diaphragm
19487	Cable and plug
21672	Output transformer

447-39040 - S245A - 25221
447X-41590 - S297A - 28567

©John F. Rider, Publisher

ATWATER KENT MFG. CO.

MODEL 317
MODEL E412
Socket, Trimmer
Chassis

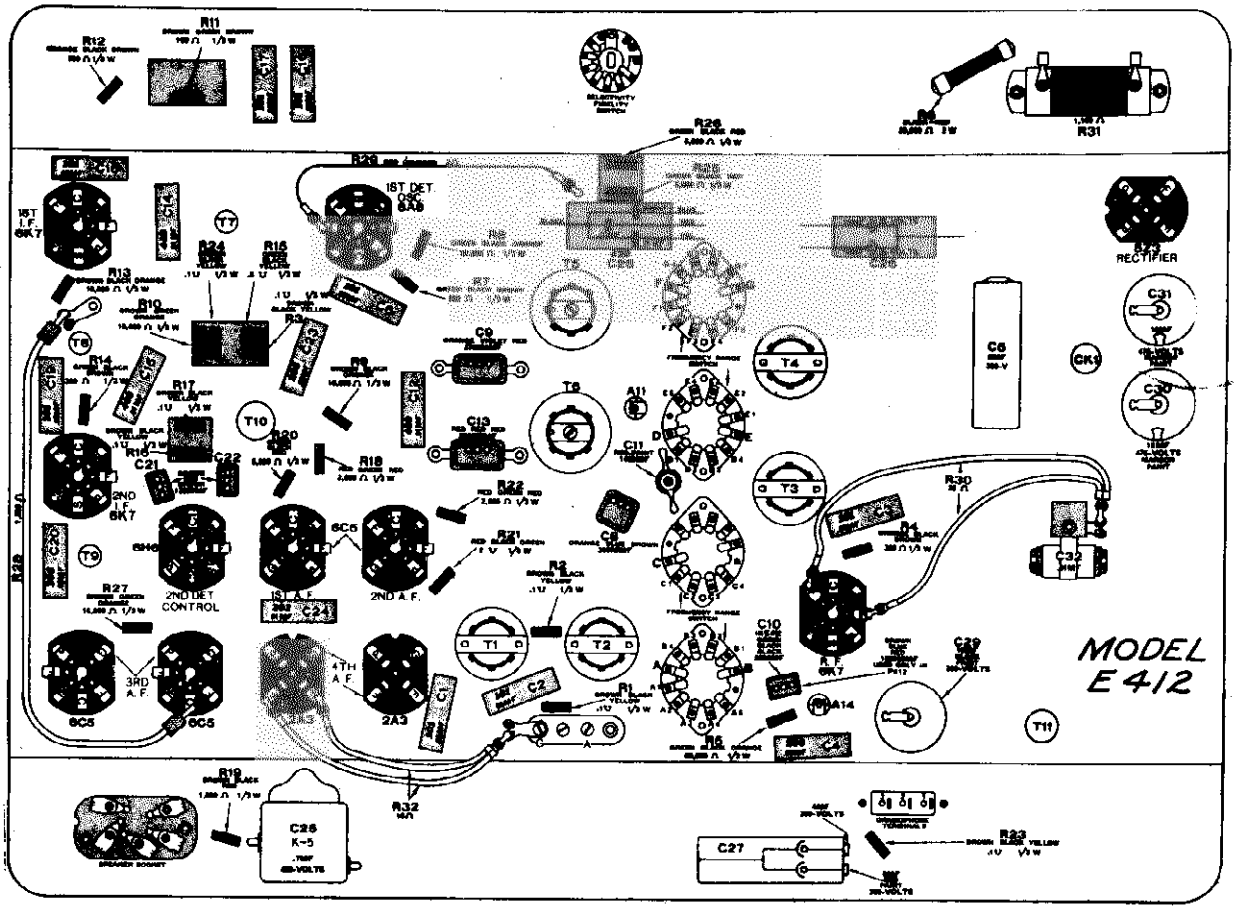

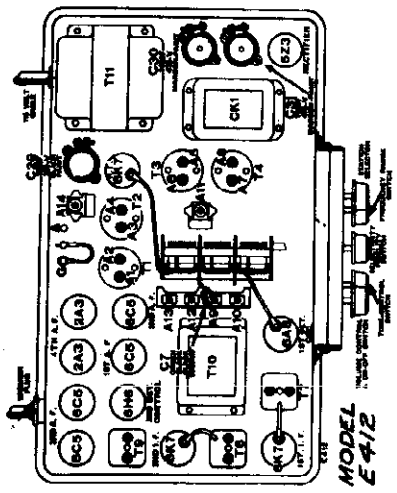

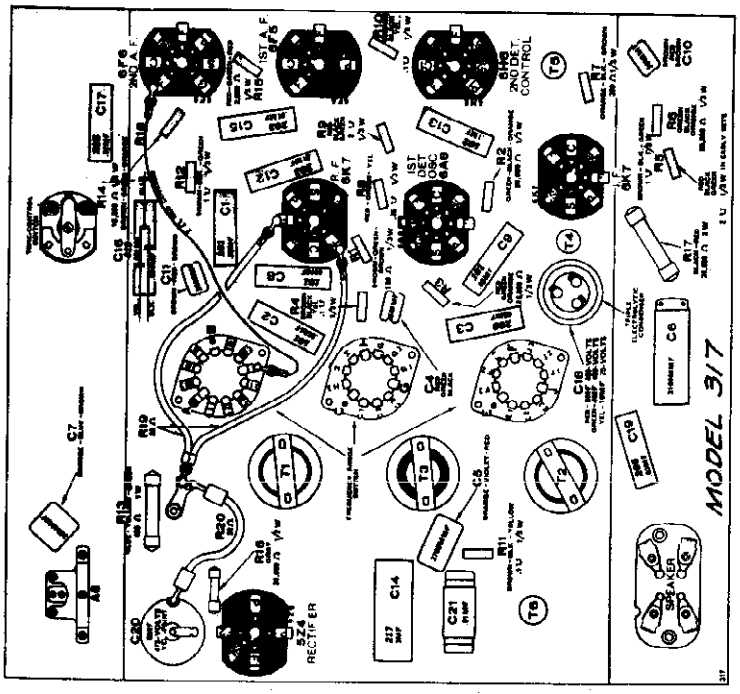

©John F. Rider, Publisher

MODELS 225,455
MODEL 256
MODEL 255
MODELS 312,E312

ATWATER KENT MFG. CO.

MODELS 225 AND 455

In the early type 225 and 455, the short-wave range is to 7.5 MC. In the late type, the short-wave range is extended to 12.6 MC.

30051	Cabinet with screen (225)	
31822	Screen (225)	
29785	Escutcheon and crystal assem.	
31768	Var. cond. assem. (in late sets)	
29675	Var. cond. assem. (in early sets)	
29516	Plate under var. cond.	
29482	Vol. control, .5	
29676	Range switch	
45570	Tone control switch	
45820	Pilot light socket assem.	
29848	Lamp, 6.5-V., bayonet base	
31401	Tube shield (in halves), 2 used	
31402	Tube cap (black)	
31047	Base cover	
29999	Dial plate (455, early)	
31511	Dial plate (225, early)	
31754	Dial plate (455, late)	
31753	Dial plate(225, late)	
29915	Dial plate holder	
29619	I.F.T. shield	
31506	Inst. sheet, F-1300 (early)	
31773	Inst. sheet, F-1315 (late)	
47280	Shipping container, 455 only	
48950	Shipping container, 225 only	

TUNING MECHANISM, MODELS 225, 455

30042	Front and back plate assem.
27692	Tuning gear
17961	Tuning rubber
27947	Dial pointer holder
27522	Pointer
27535	Pointer screw
29417	Tuning shaft

TRANSFORMERS

T1	47760	No. 1 R.F.T. (early)
T1	49160	No. 1 R.F.T. (late)
T2	44840	Oscillator trans. (early)
T2	49170	Oscillator trans. (late)
T3	47750	No. 1 I.F.T.
T4	44950	No. 2 I.F.T.
T5	45810	Power transformer (110-V., 60-C.) S-355
T6	21672	Output transformer

RESISTORS

R18	45880	4 ohm, dial light resistor
R19	45860	25 ohm, filament shunt

CONDENSERS

C2	27599	5700 MMF, 450-V.
C3	29589	560 MMF, 450-V.
C3A	29687	120 MMF, 450-V.
C16	27585	16 MF, 300-V., electrolytic
C17	25594	8 MF, 475-V., electrolytic
C18	23250	.01 MF, 450-V.

TRIMMERS

A2	29708	Oscillator, front of chassis
A3	39630	Tracking, rear of chassis
A4,5	29545	Double I.F. on T3
A6,7	29825	Double I.F. on T4

SOCKETS

30058	Universal 8-prong socket
21556	Speaker socket
24492	4-prong (80)
24494	6-prong (75)

MODEL 256

(European Compact)

28558	Cabinet, complete.....
25785	Cloth screen.....
19527	Cabinet feet.....
25691	Escutcheon
25614	Name plate
25756	Knob, tuning and volume
25811	Knob, tone and range
25281	Knob set screw
25295	Instruction card, F-1066
24079	Volume control, .5 meg.
24062	Volume control mounting bracket
20093	Volume control mounting nut
30560	Tone control switch complete
24207	Shaft and blade for above
25997	Phono switch
25822	Phono switch name plate
25823	Phono switch mounting nut
25571	Range switch
21497	Range switch mounting nut

TRANSFORMERS

T1	26772	No. 1 long wave transformer
T2	33590	No. 1 broadcast transformer
T3	26775	No. 2 long wave transformer
T4	33610	No. 2 broadcast transformer
T5	26771	No. 1 I.F.T.
T6	25769	No. 2 I.F.T.
T7	21672	Output transformer
T8	25591	Power transformer

CONDENSERS

C1, 3,4	27650	8 MMF., 500 Volts
C2	34070	455 MMF.
C5	32160	1450 MMF.
C8	21160	200 MMF.
C11	25379	10 MF., 25 V.
C12,15	26581	8 MF., 450 V.
	33060	Multiple bypass (J-14)
	25589	Variable condenser assembly

RESISTORS

R5	20620	670 ohms, flexible
R4	21420	250 ohms, flexible
R16	17077	10 ohms, flexible
R17	31860	1 ohm, flexible

CHOKES

CH1	19210
CH2	17390

TRIMMERS

A5,6	33119	Double trimmer
A7,8	30110	Double trimmer
A9,10	24760	Double trimmer
A11,12	27860	Double trimmer

MISCELLANEOUS

25552	Dial light socket
15404	Dial lamp, 2.5 volts
25091	Dial knob shaft bracket
17961	Dial rubber and bushing
24055	Dial knob shaft
25545	Dial gear
25551	Dial plate
24323	Power transformer cover
25136	Fuse, 1 amp.

SOCKETS

22755	6 prong
22754	5 prong
22689	4 prong

SHIELDS

25452	Shield for T1,5,6
21877	Shield for T3
25556	Shield for T2,4

256 SPEAKER NO. 36500

18670	Field coil, 2000 ohms.
21672	Output transformer, T7
19465	Diaphragm
25657	Small choke

MODEL 255

30116	Cabinet with screen.....
32456	Screen and gasket.....
32484	Knob (with dot)
32465	Knob (without dot)
32598	Volume control.
32599	Range and tone control switch
31768	Variable condenser
31401	Tube shield (half)
31402	Tube shield cap
32403	Base cover
32004	Shield for T3
32005	Shield for T4
28349	Phono terminal strip
30540	Shipping container

TRANSFORMERS

T1	49510	R.F.T.
T2	49520	Oscillator transformer
T3	50450	No. 1. I.F.T., less shield
T4	50440	No. 2 I.F.T. less shield
T5	45810	Power transformer
T6	50117	Output transformer
T7	50450	Wave trap assembly

CONDENSERS

C3	29589	560 MMF
C16	27585	16 MF, 300 V.
C17	22558	8 MF, 475 V.

RESISTORS

R18	49570	4 Ohms

TRIMMERS

A2	28845	Front of chassis
A5	39630	Rear of chassis

SOCKETS

30058	Universal 8 prong
24492	4 prong
24494	6 prong
21556	Speaker socket

255 SPEAKER NO. 50390

32404	Speaker, less cable
30119	Field coil
30117	Output transformer
30121	Cone head assembly

MODELS 312 and E312

27321	Volume control .....
39150	Tone control switch
28151	Shaft and blade for above
29409	Selectivity switch
46090	Range switch
29429	Variable condenser

TUNING PARTS

Same as Model 810

CONDENSERS

27583	16 MF, 300 V., electrolytic
28031	8 MF, 475 V., electrolytic
29962	4-8 MF, 200 V., electrolytic
25384	8 MF, 300 V., electrolytic
29961	16 MF, 475 V., electrolytic

FILTER CHOKE

46290	Filter choke

TRIMMERS

39140	Strip of four trimmers
38770	Tracking trimmer (2)
44570	Double R.F. trimmer
29823	Double I.F. trimmer

SOCKETS

24492	4 prong
24493	5 prong
24494	6 prong
26111	7 prong
21337	Speaker socket

SHIELDS

22683	Tube shield
23743	Auxiliary tube shield
29547	Shield for T1, T3
29548	Shield for T2, T4
27335	Shield for T5, T6
29619	I.F.T. shield

312 SPEAKER NO. 48900

36080	Field coil
46740	Output transformer
26243	Diaphragm

©John F. Rider. Publisher

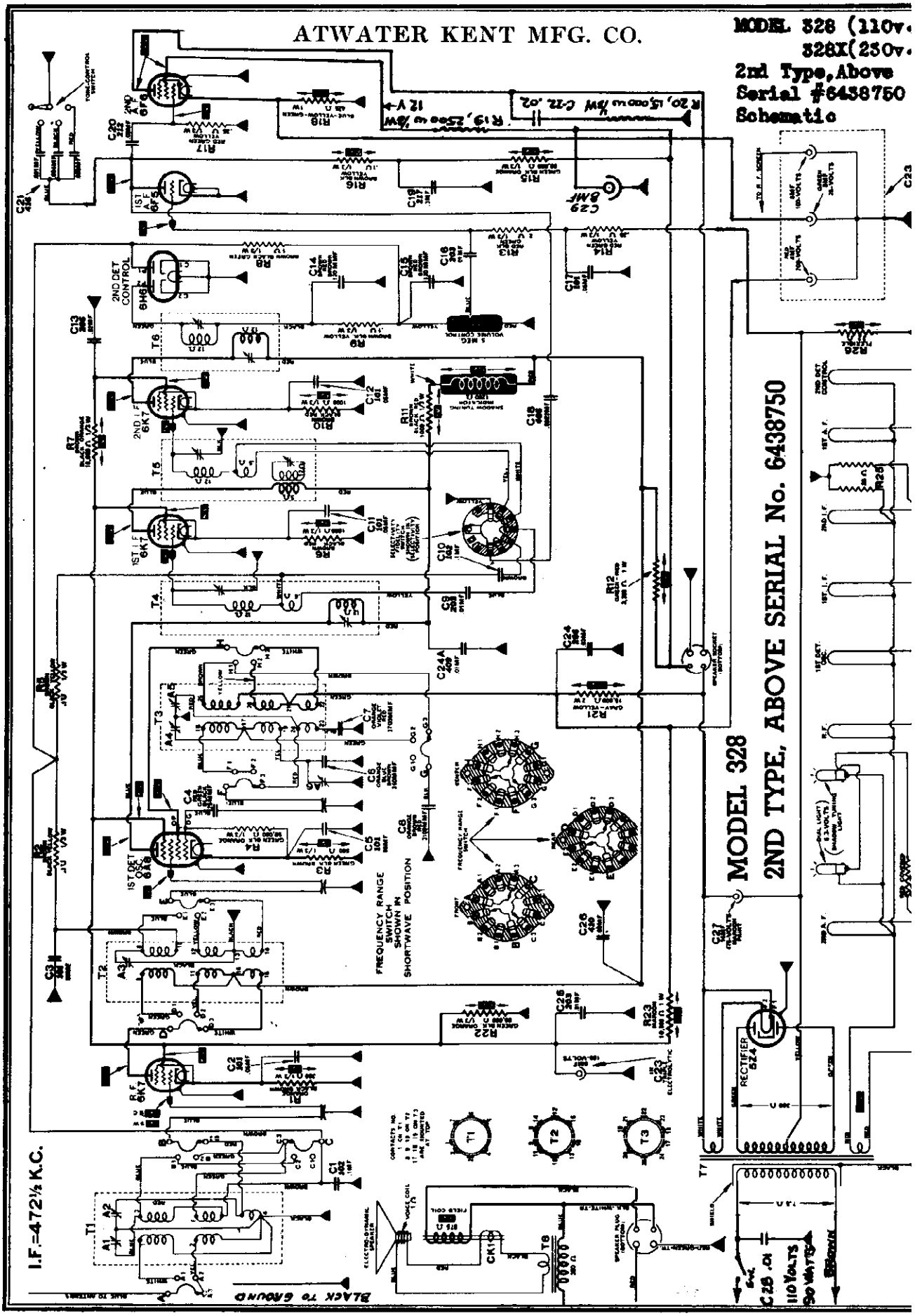

©John F. Rider, Publisher

MODEL 328, Early and Late Chassis Layouts

ATWATER KENT MFG. CO.

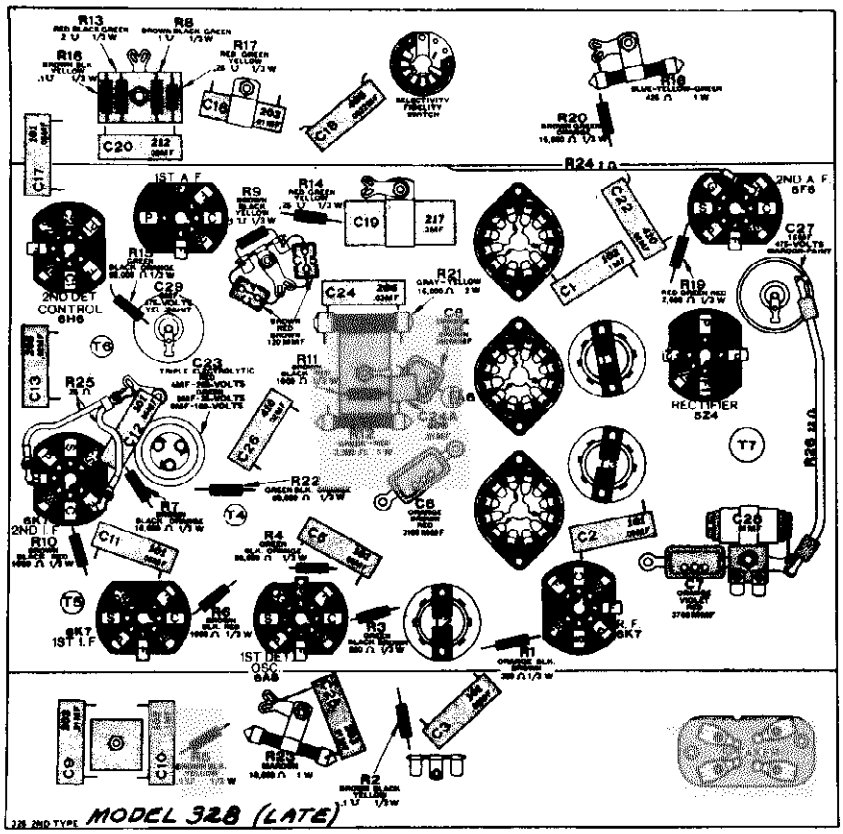

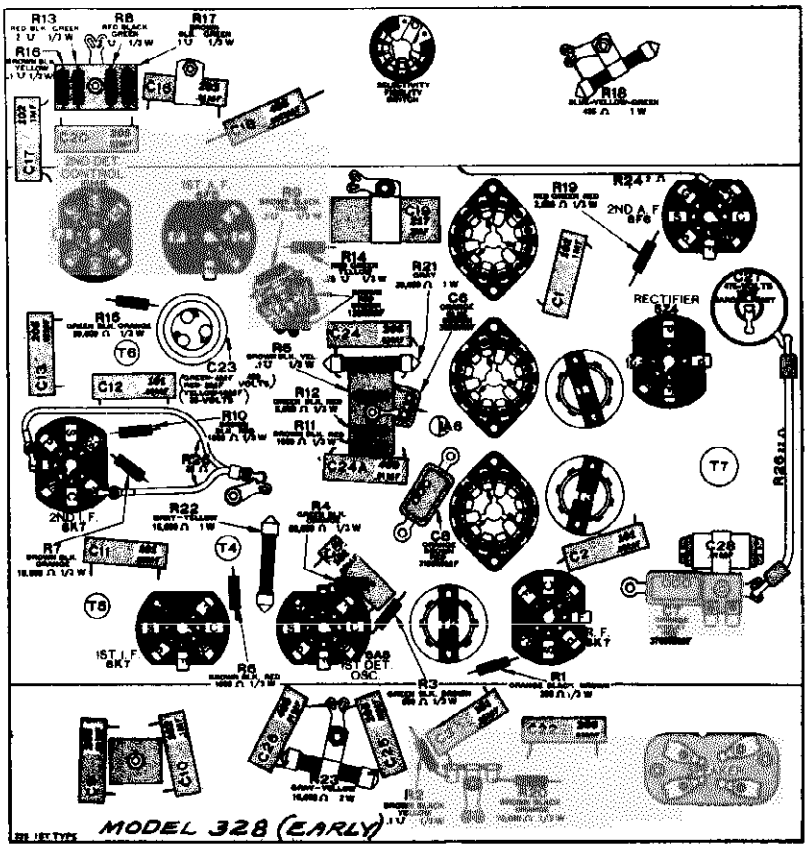

©John F. Rider, Publisher

ATWATER KENT MFG. CO.

MODELS P412, P412
P412X, P412
Schematic

MODELS 424,534
CHASSIS H-1
Changes

ATWATER KENT MFG. CO.

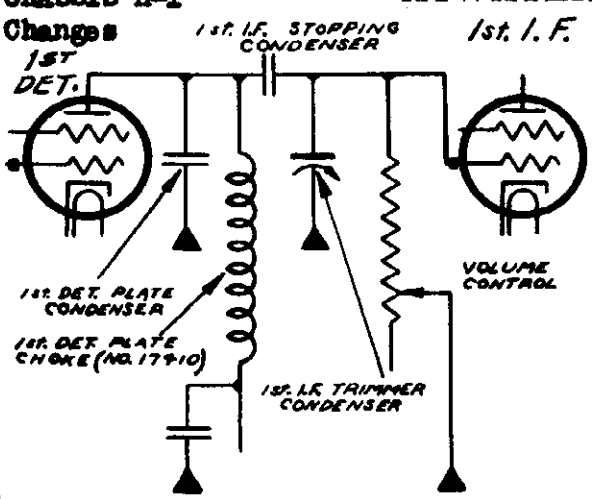

Original Connections in Type H-1 Chassis
(Below Serial #5,855,201)

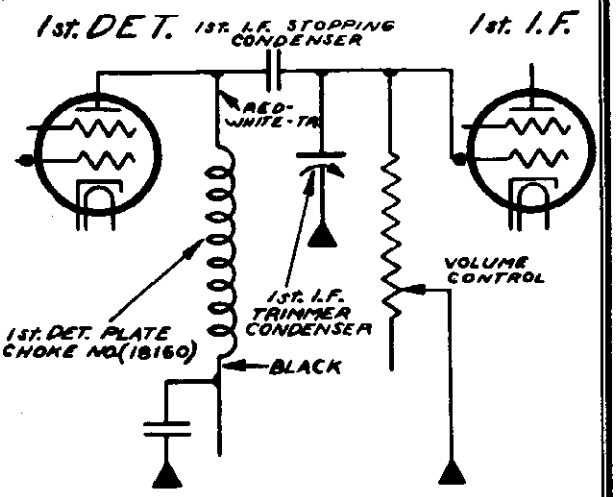

Changes in Type H-1 Chassis
To Increase Sensitivity

CHANGE IN H-1 CIRCUIT TO SECURE GREATER SENSITIVITY

By making a slight change in the circuit of type H-1 Chassis, it is possible to secure considerably greater sensitivity. This change may be made in less than one-half hour, and only two small parts are required (one No. 18160 choke, and one No. 18272 adjusting disc). The procedure is as follows:-

1. Remove the bottom plate and locate the 1st-detector plate choke (part No. 17410). This choke is oval shaped and has two contacts, one at each end. The choke is mounted at the rear of the oscillator tube socket which is at the front center of set (UX-227). There are two small fixed condensers mounted on top of this choke, all three parts being held by one bolt. Of these two fixed condensers, the one toward the front of the set is the 1st-1.F stopping condenser (Part No. 17440): The other fixed condenser is the 1st-detector plate condenser (Part No. 17470).

2. Tag the 1st-1.F stopping condenser, No. 17440, as this part is to be used again.

3. Unsolder the leads to these three parts and remove them from the set. It will be found that there are two brass washers and a nut on the mounting bolt between the choke and the chassis. Remove the nut and one washer. Leave the other washer on the bolt.

4. Screw a No. 18272 aluminum adjusting disc all the way down on the mounting bolt. Slip a lock washer down on top of the disc and then screw on a No. 8186 nut.

5. With its two leads facing out, put a No. 18160 choke on the mounting bolt. Then put the No. 17440 1st- 1.F stopping condenser back in its original position.

6. Connect as shown in the right hand diagram.

7. Put the set in operation with the volume control turned on full.

8. Adjust the 1st-1.F. trimmer condenser (on top, at the front center of chassis)to a point just below the position at which the 1.F. amplifier begins to oscillate. (The bottom plate must be in place while making this adjustment of the 1st-1.F. trimmer condenser.)

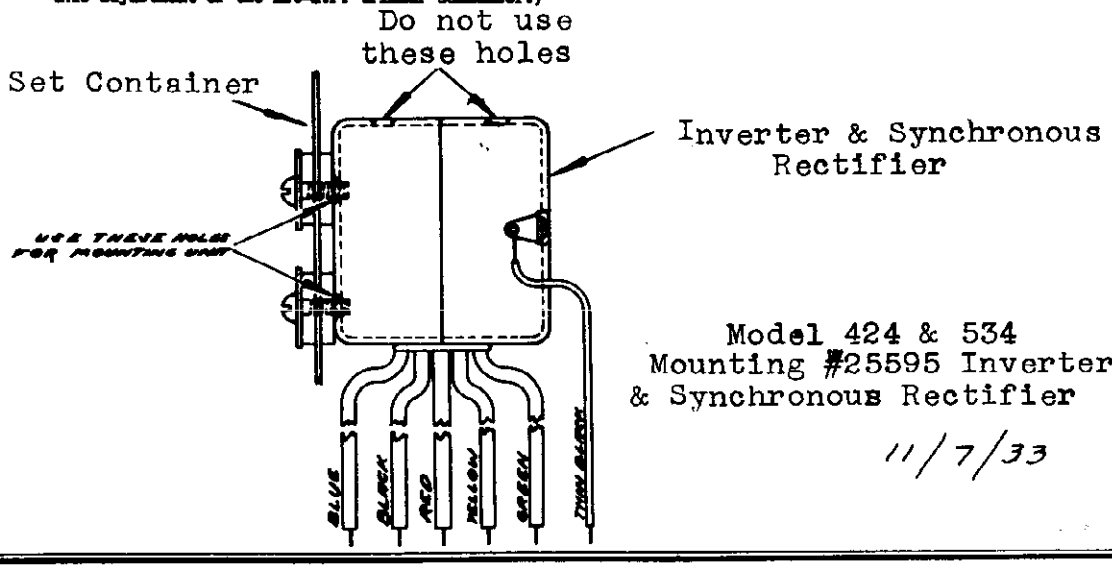

Model 424 & 534
Mounting #25595 Inverter
& Synchronous Rectifier

11/7/33

©John F. Rider, Publisher

ATWATER KENT MFG. CO.

MODEL 435, 2nd Type Schematic

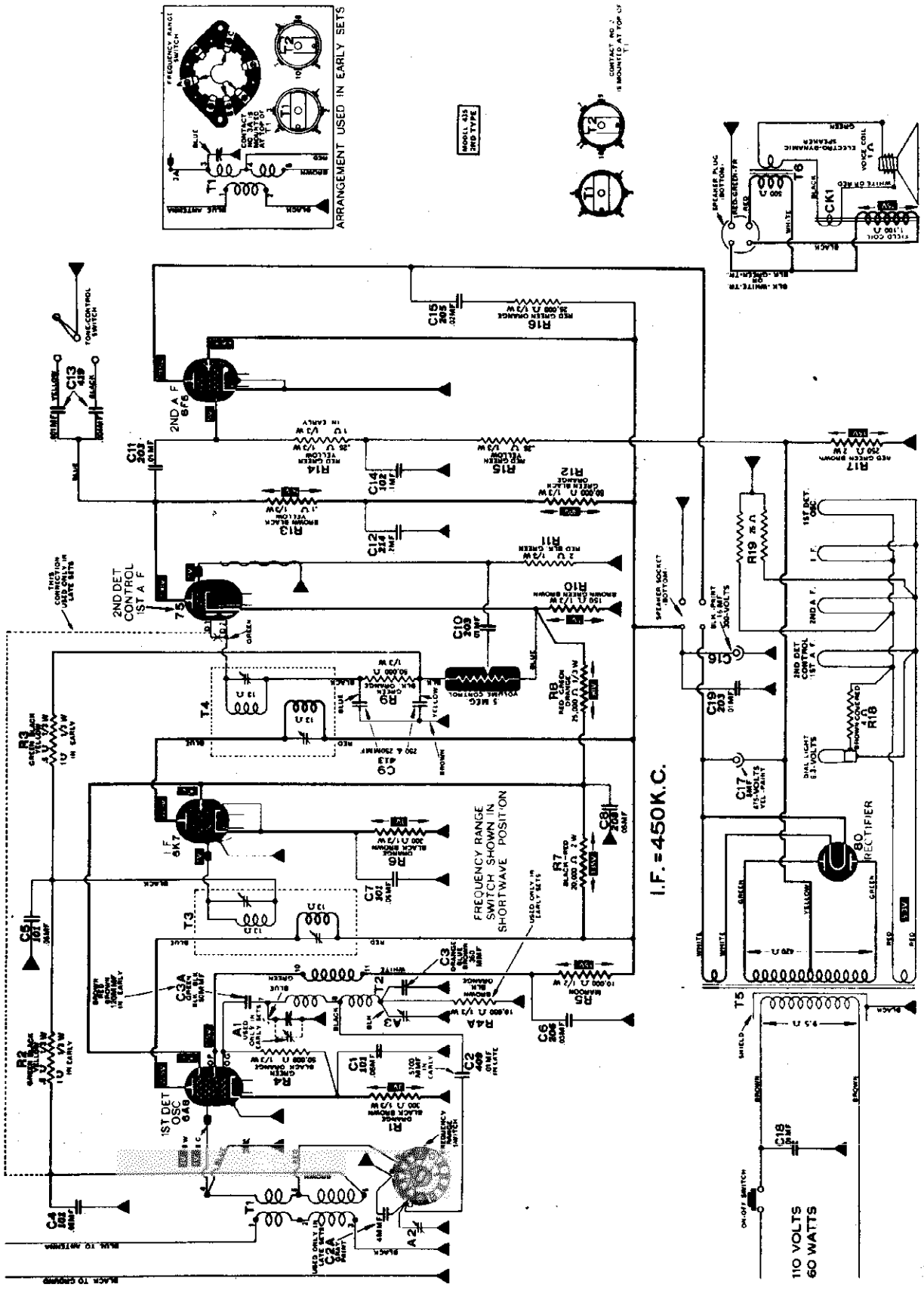

©John F. Rider, Publisher

MODEL 435, 2nd Type
Socket, Trimmers
Chassis Layout

ATWATER KENT MFG. CO.

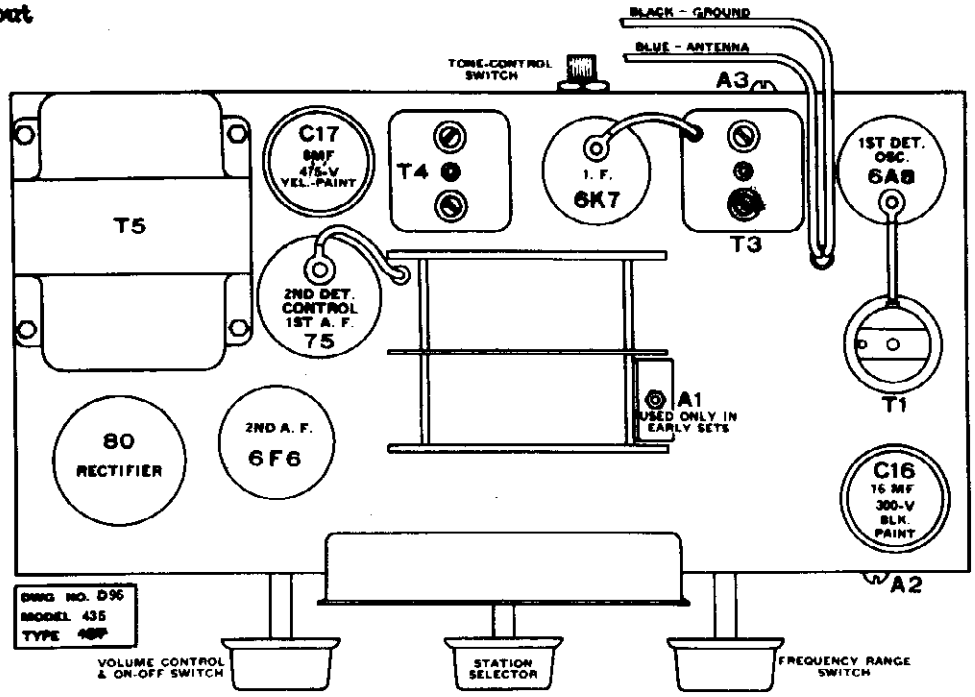

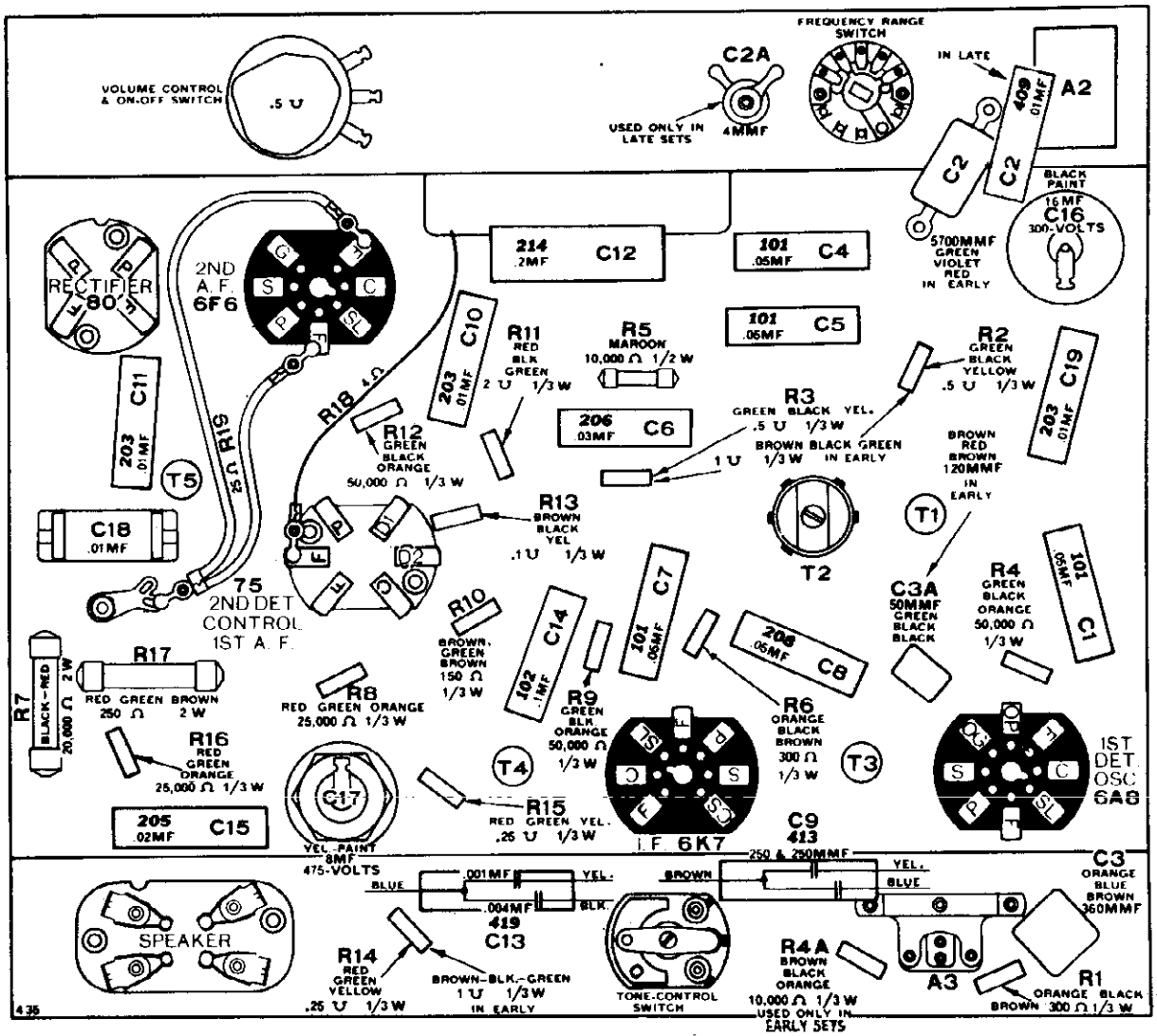

© John T. Riddle, Publisher

ATWATER KENT MFG. CO.

Schemati

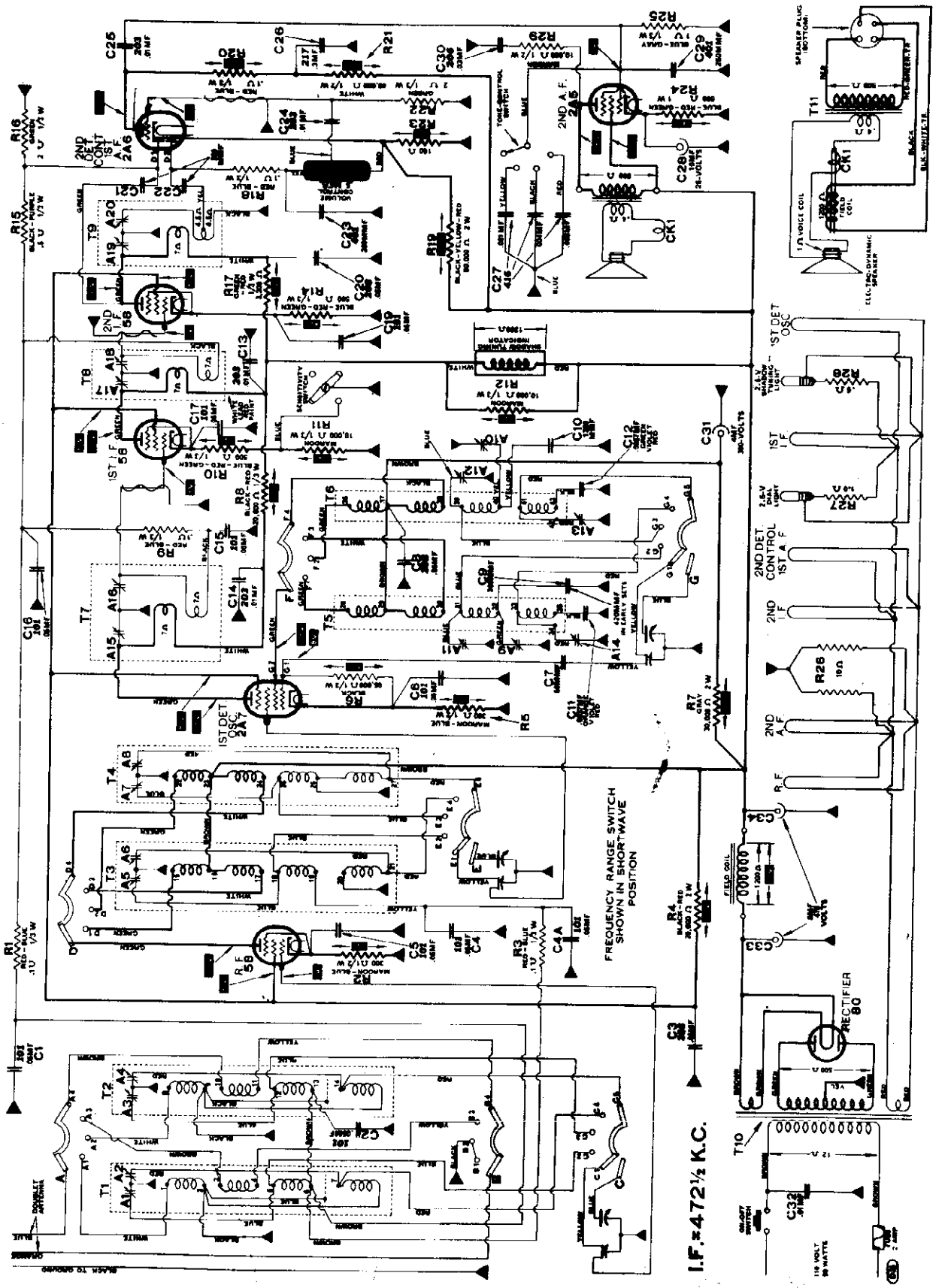

©John F. Rider, Publisher

MODEL 447
MODEL 487
Chassis Layouts

ATWATER KENT MFG. CO

MODEL 447

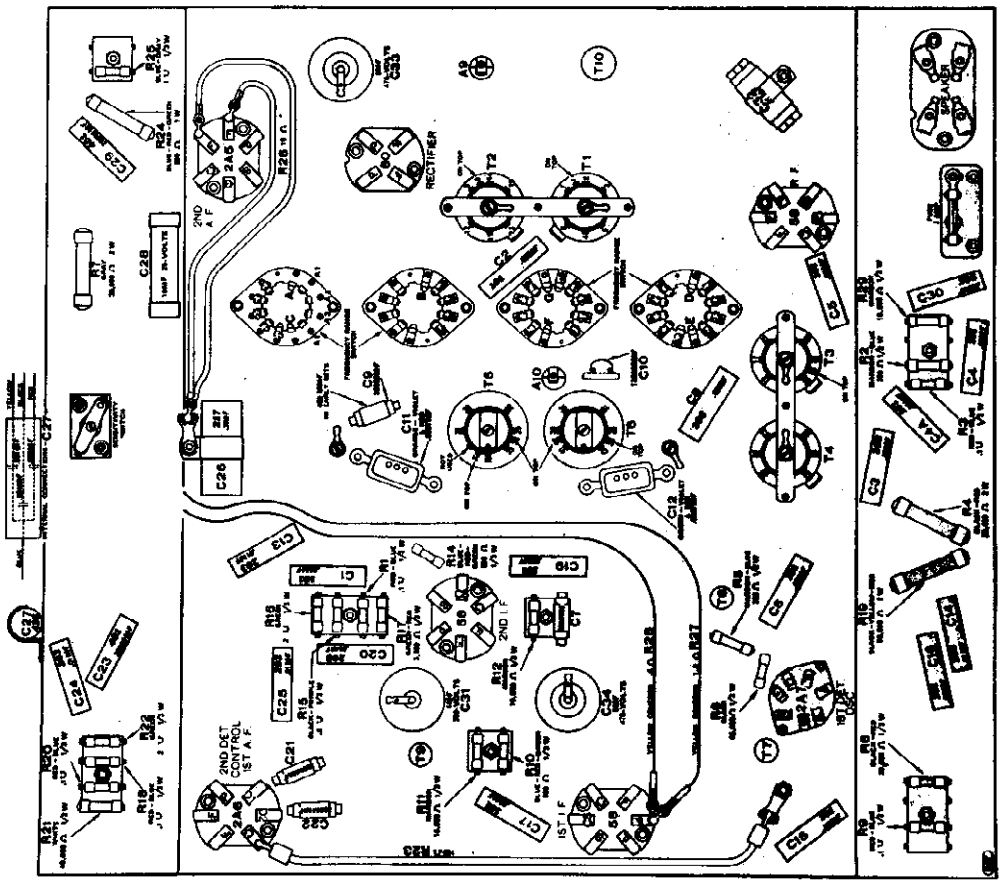

MODEL 487

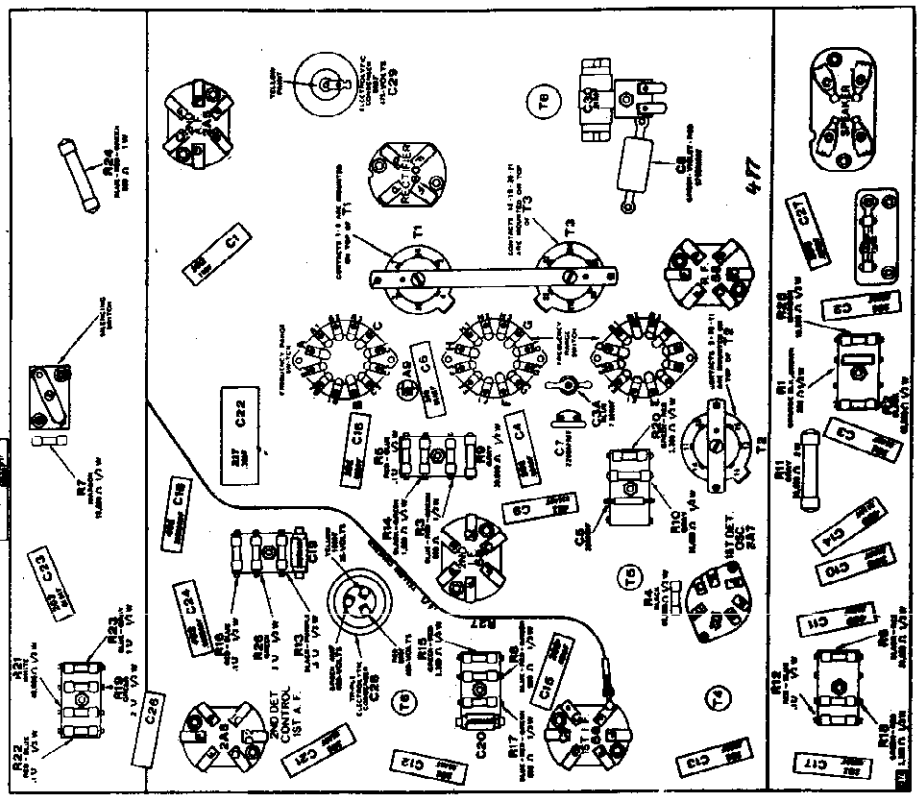

©John F. Rider, Publisher

ATWATER KENT MFG. CO.

MODEL 485Q, 515Q
Schematic

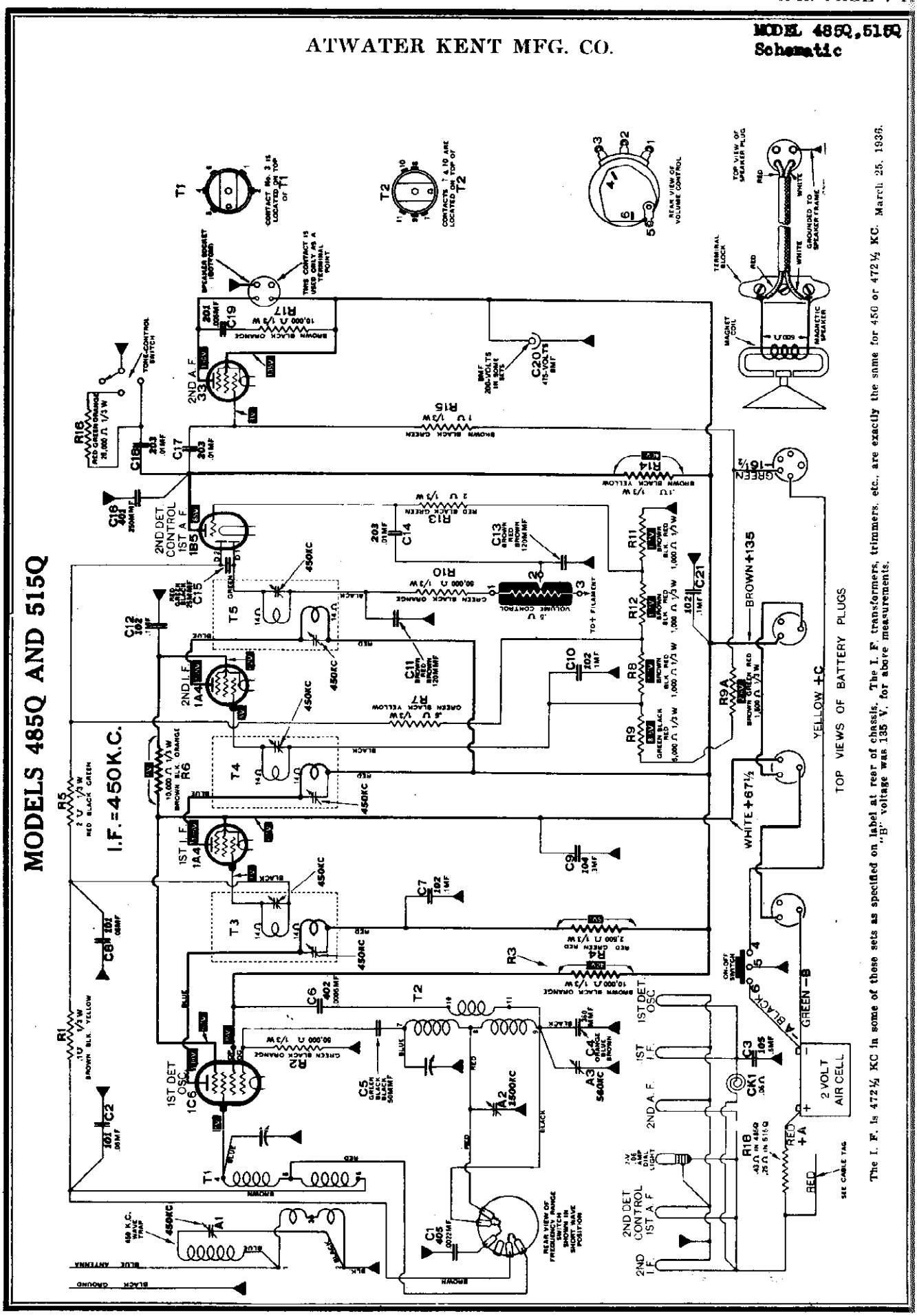

The I. F. is 472½ KC in some of these sets as specified on label at rear of chassis. The I. F. transformers, trimmers, etc., are exactly the same for 450 or 472½ KC. March 25, 1935.
"B" voltage was 135 V. for above measurements.

©John F. Rider, Publisher

©John F. Rider, Publisher

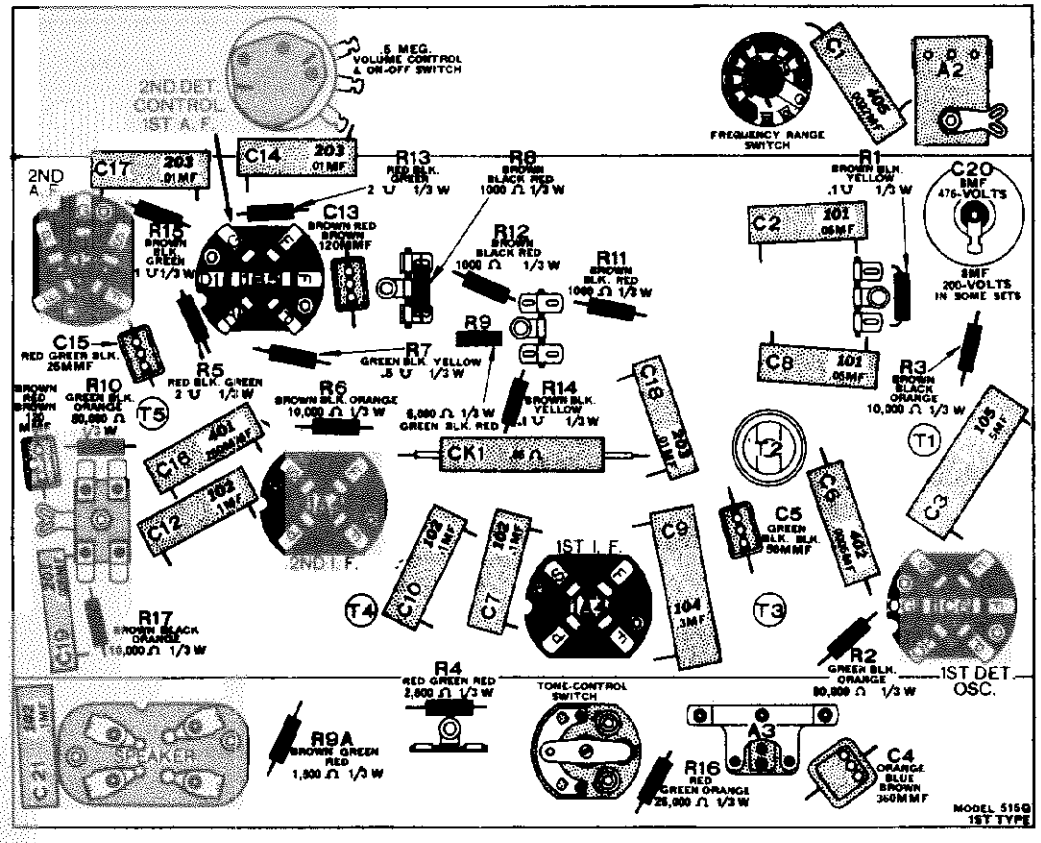

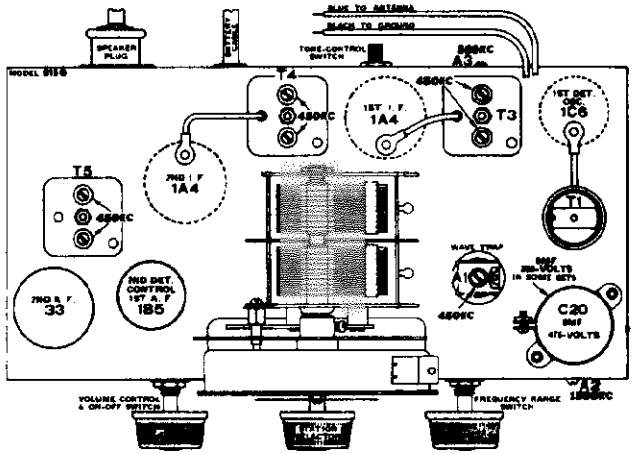

MODELS 485Q AND 515Q

I. F. TRIMMERS

Connect signal generator (450 KC) to 2nd-I. F. grid cap by means of No. 42590 coupling unit. Peak two trimmers on top of T5 (3rd I. F. transformer).

Connect signal generator to cap of 1st-I. F. tube and peak two trimmers on top of T4 (2nd I. F. transformer).

Connect signal generator to cap of 1st-detector tube and peak two trimmers on top of T3 (1st I. F. transformer).

DIAL POINTER ADJUSTMENT

With the variable condenser fully meshed, the arrow-indicator disc should be set at 540 KC.

A1—Trap trimmer, 450 KC.
A2—Broadcast oscillator, 1500 KC.
A3—Broadcast tracking, 560 KC.

There are six I. F. trimmers, two on top of each I. F. transformer (T3, 4 and 5).

These are peaked at 450 KC.

R. F. TRIMMERS

In location where severe electrical interference is present, it is necessary, when aligning R. F. trimmers, to connect a 40,000-ohm resistor in series with a .02 M. F. condenser from the grid cap of the 1st-I. F. tube to chassis. This reduces the I. F. sensitivity and permits use of a stronger output from the signal generator to over-ride the local noise level without bringing the AVC into action.

Short-wave Range

No trimmers on this range.

Broadcast Range

Connect signal generator to antenna and ground of set, using a 250 MMF condenser in series with the antenna lead. With signal generator and dial at 1500 KC, peak the broadcast oscillator trimmer A2. Use the first peak as A2 is screwed in from a loose position. Tune generator to 560 KC and peak broadcast tracking trimmer A3 while rocking variable condenser one division around the 560 KC mark. Repeat adjustments at 1500 and at 560 KC if necessary.

I. F. Trap

Feed 450 KC signal into antenna and ground of set, using a .00025 MFD condenser in series with the antenna lead. Adjust A1 trap trimmer for minimum response.

I. F. is 472½ KC in Some of These Models

In some Models 485Q and 515Q sets, the I. F. is 472½ KC as indicated by label on rear of chassis. With these models, all adjustments mentioned above for 450 KC should be made at 472½ KC.

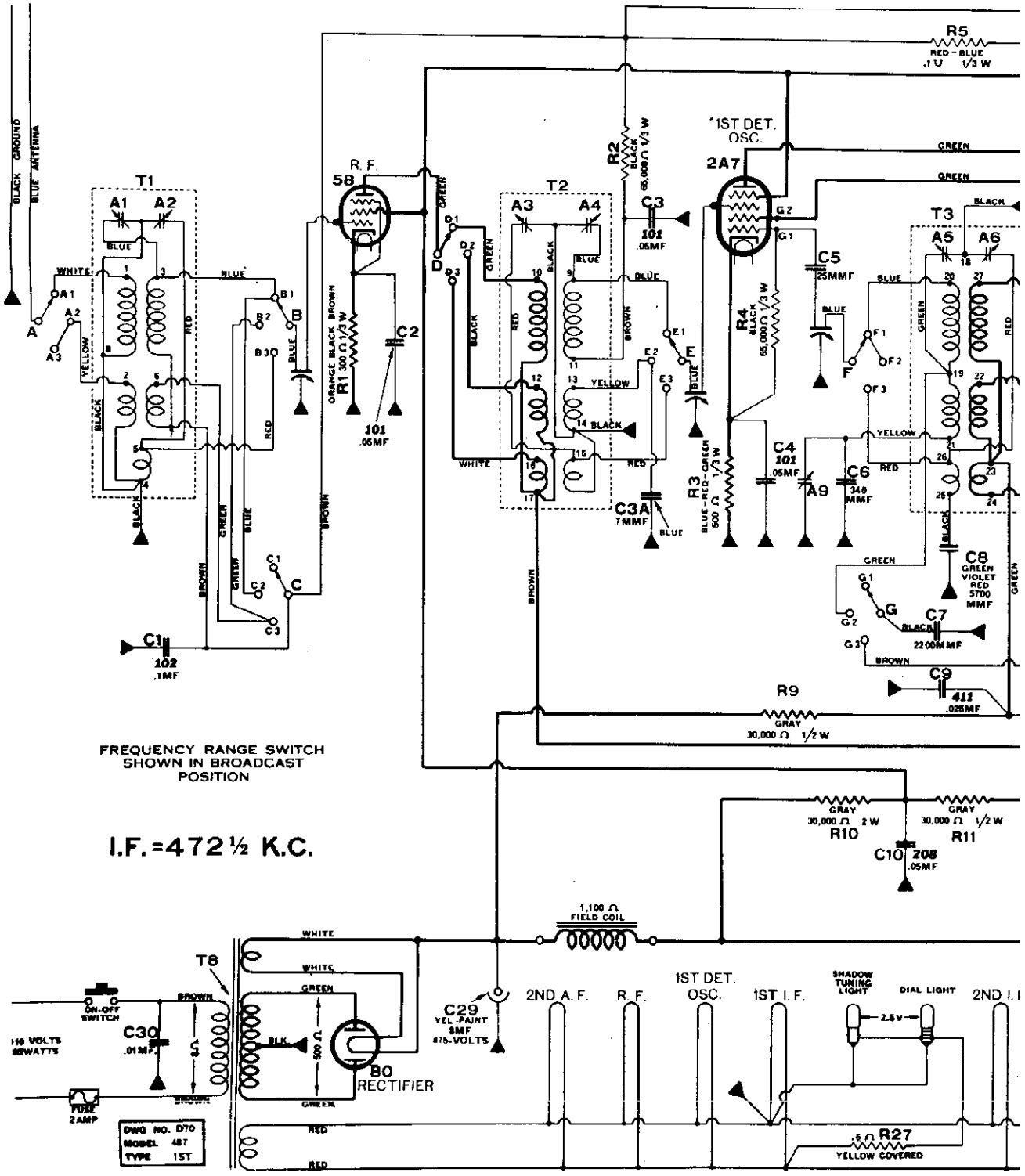

©John F. Rider, Publisher

ENT MFG. CO.

MODEL 487
Schematic

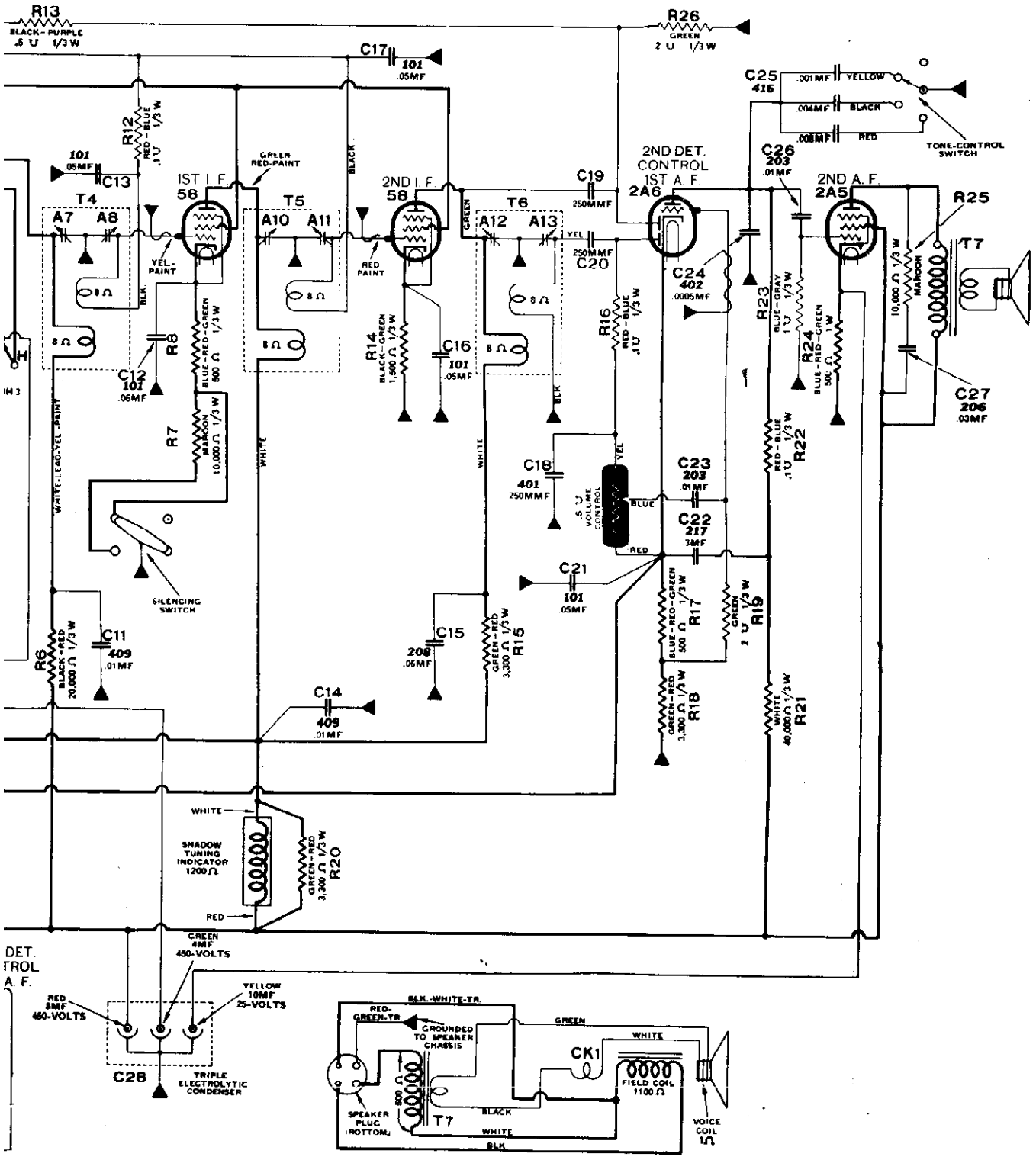

MODEL 509
Schematic
Socket, Trimmers

ATWATER KI

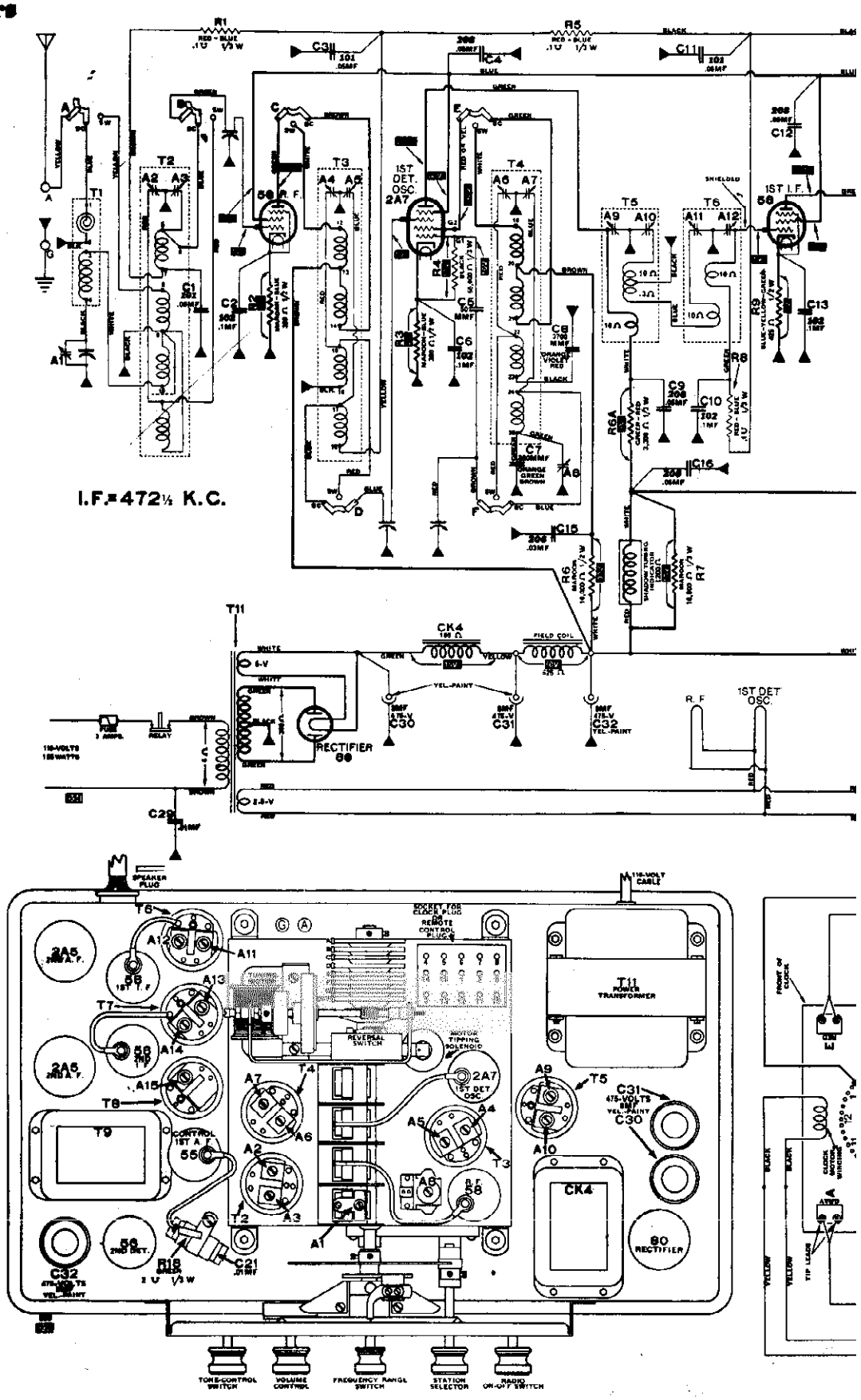

©John F. Rider, Publisher

MFG. CO.

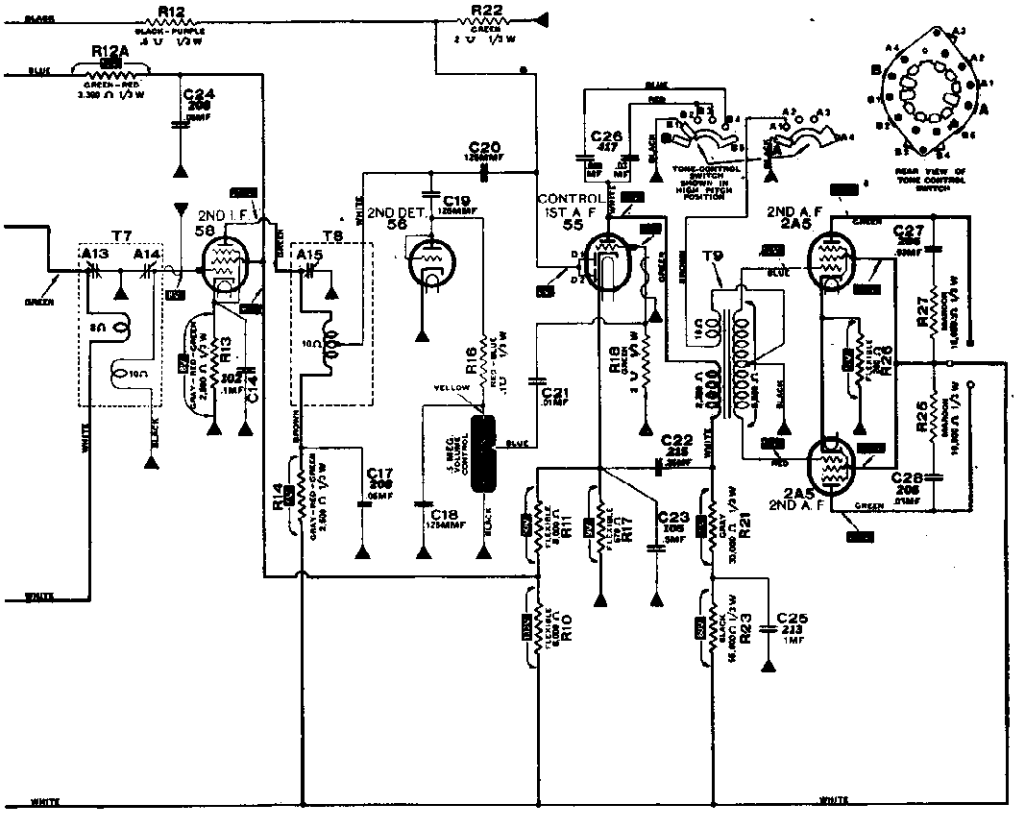
R12
R22
R12A
C24
C20
C19
C26
2ND I F
56
2ND DET.
56
CONTROL
1ST A F
55
2ND A F
2A5
T7
T8
T9
A13
A14
A15
C27
R27
R28
R25
C28
R16
R18
C21
C22
C17
C18
C23
R14
R13
C14
R11
R17
R21
R10
R23
C25

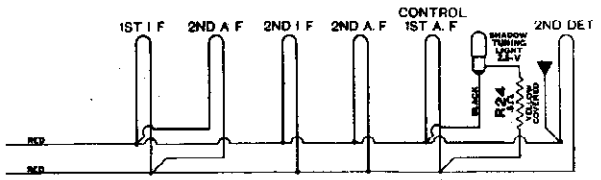
1ST I F
2ND A F
2ND I F
2ND A. F
CONTROL
1ST A. F
2ND DET

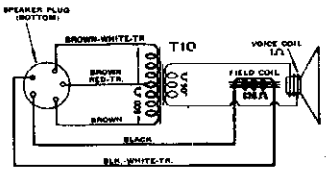
T10
BROWN-WHITE-TR
BROWN
RED-TR
BROWN
BLACK
BLK.-WHITE-TR.

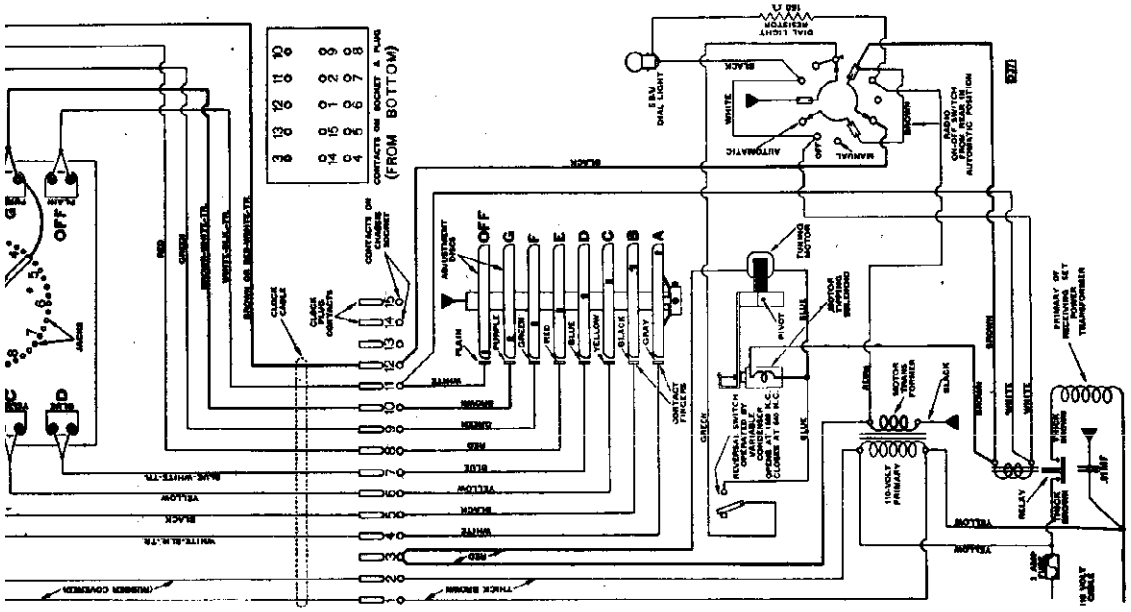
OFF
A
B
C
D
E
F
G
OFF
(FROM BOTTOM)
DIAL LIGHT
AUTOMATIC
MANUAL
RELAY

ATWATER KENT MFG. CO.

MODEL 509
Chassis Wiring

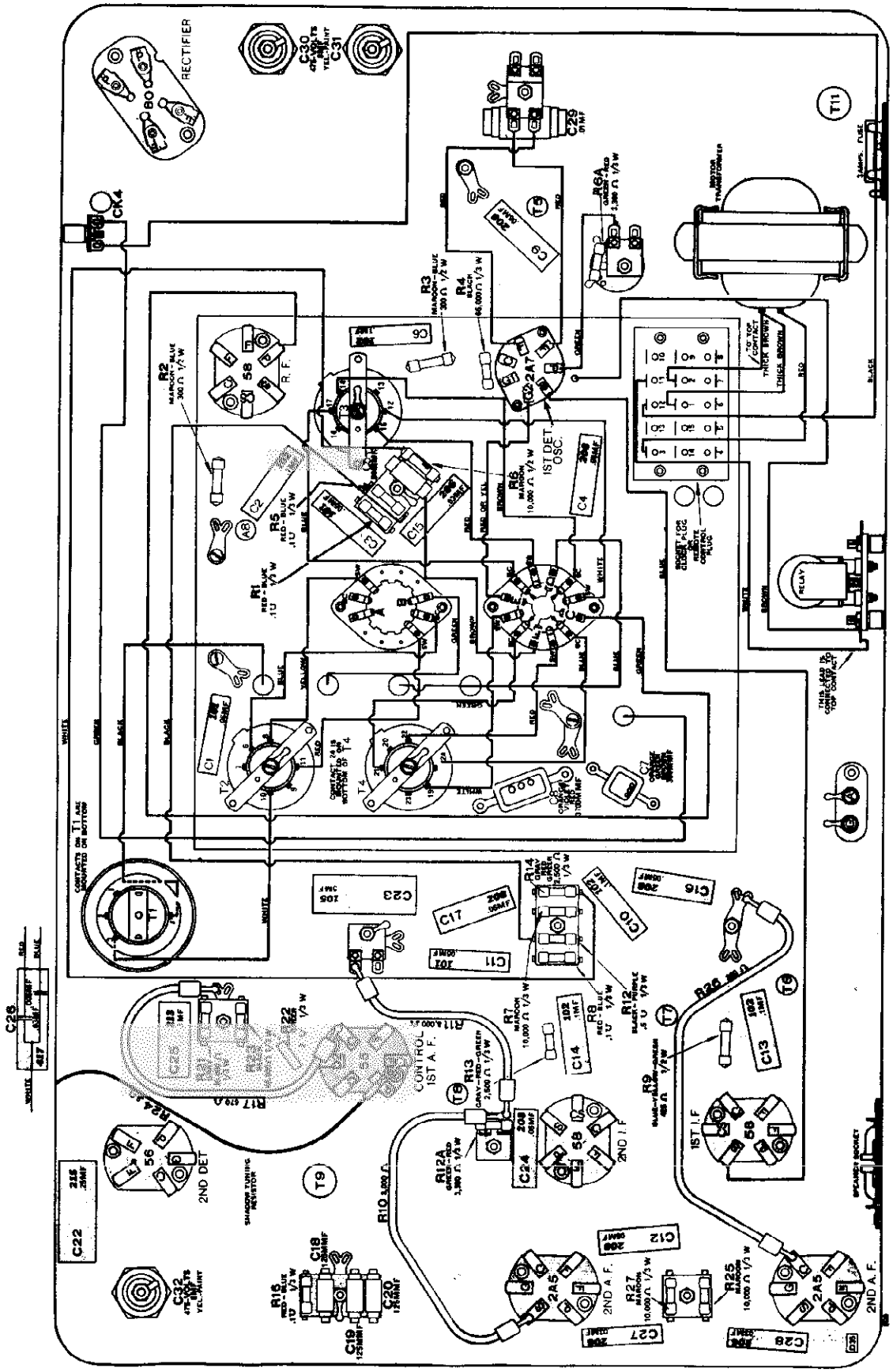

MODEL 511
Changes

ATWATER KENT MFG. CO.

CHANGE IN MODEL 511 AUDIO TO REDUCE HUM

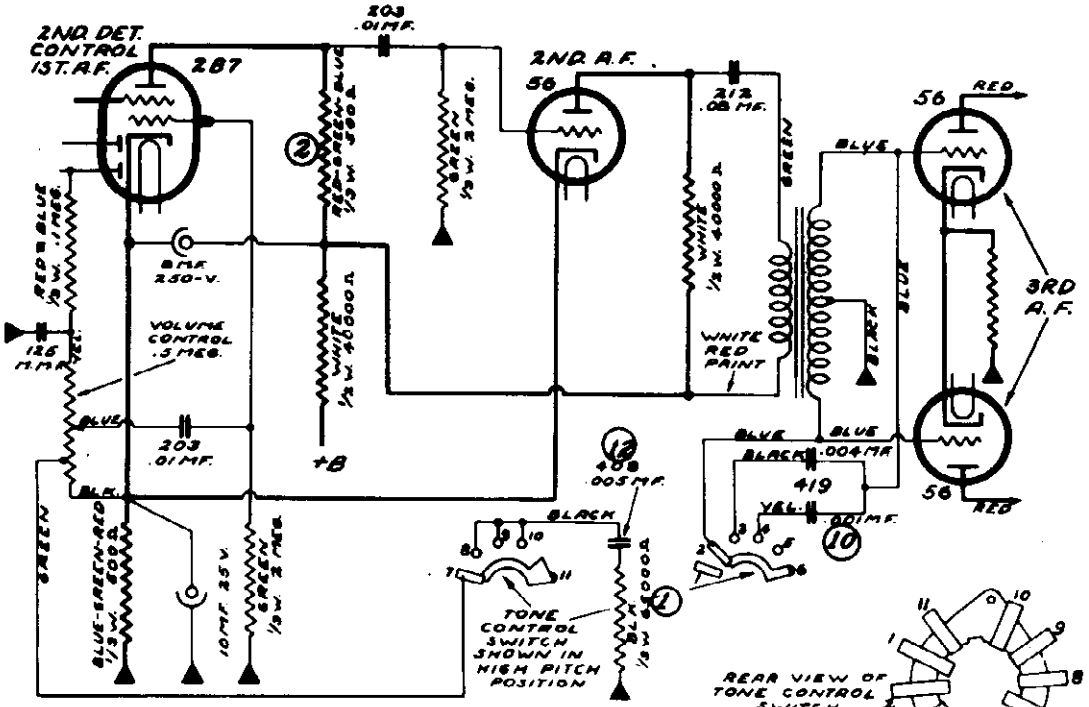

A. Remove resistors 1, 2, 3 and 4. Save resistor 4 for use in the revised circuit.

B. Remove condensers 5, 6, 7 and 8.

C. Remove choke 11.

D. Add one tubular condenser No. 39650 (code No. 419) and change the wiring of the tone control circuit as shown in the revised circuit. Mount the 419 condenser on the front of the chassis between the front panel and the chassis by means of a No. 28826 clamp. Use the screw that fastens the tubular-resistor mounting strip on the front flange of the chassis, to fasten the clamp for the 419 condenser.

E. Connect a 500-ohm tubular resistor (No. 39790) in the plate of the 2B7 as shown in the revised circuit.

MATERIAL REQUIRED

1 No. 39650 tubular condenser (419).
1 No. 28826 clamp for condenser.
1 No. 39790 500-ohm 1/3 watt tubular resistor.

©John F. Rider, Publisher

ATWATER KENT MFG. CO.

MODEL 556
Schematic

DIAGRAM OF MODEL 556

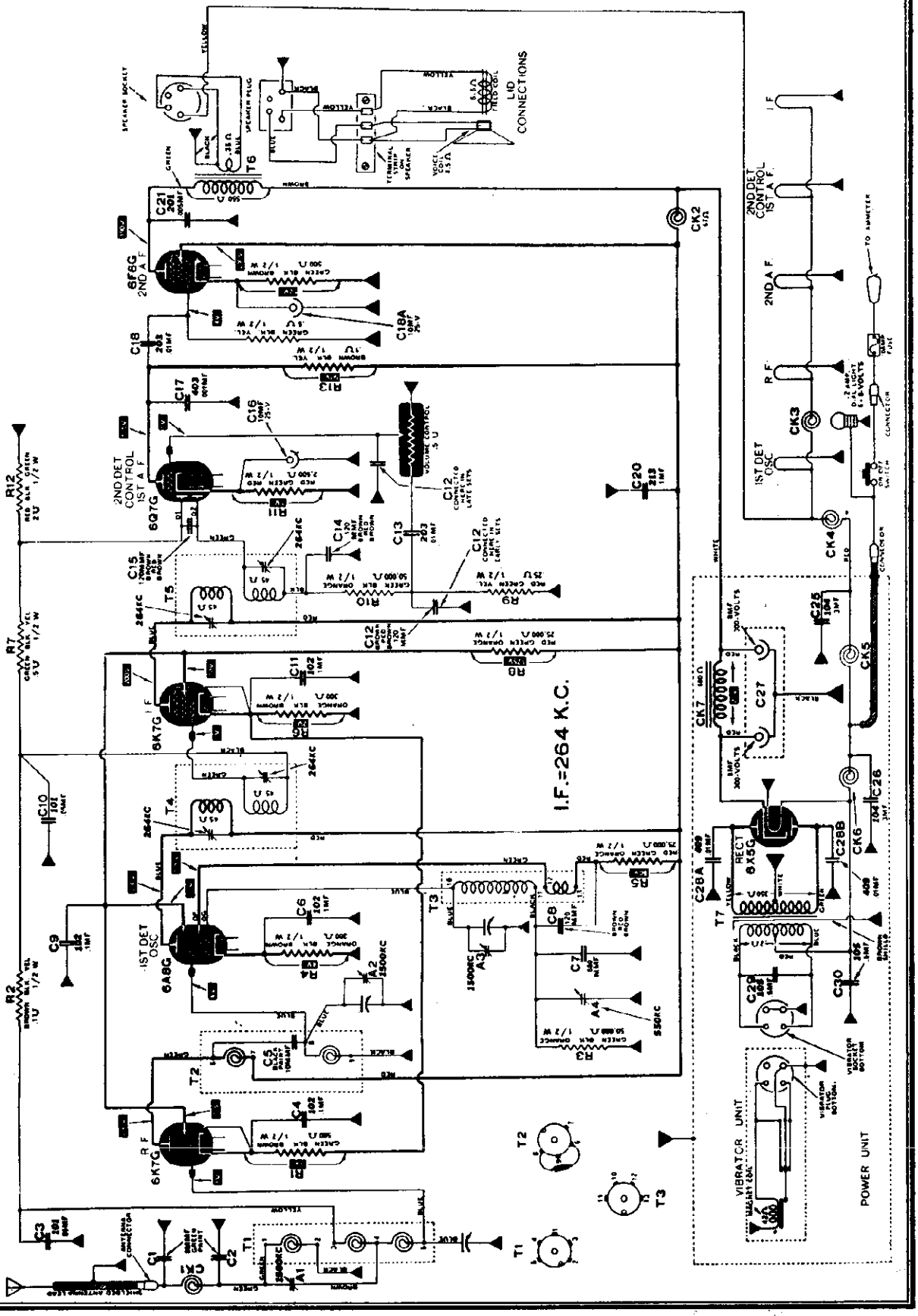

©John F. Rider, Publisher

PHONOGRAPH
Connections
MODELS 612,812
Change

ATWATER KENT MFG. CO.
PHONOGRAPH CONNECTIONS

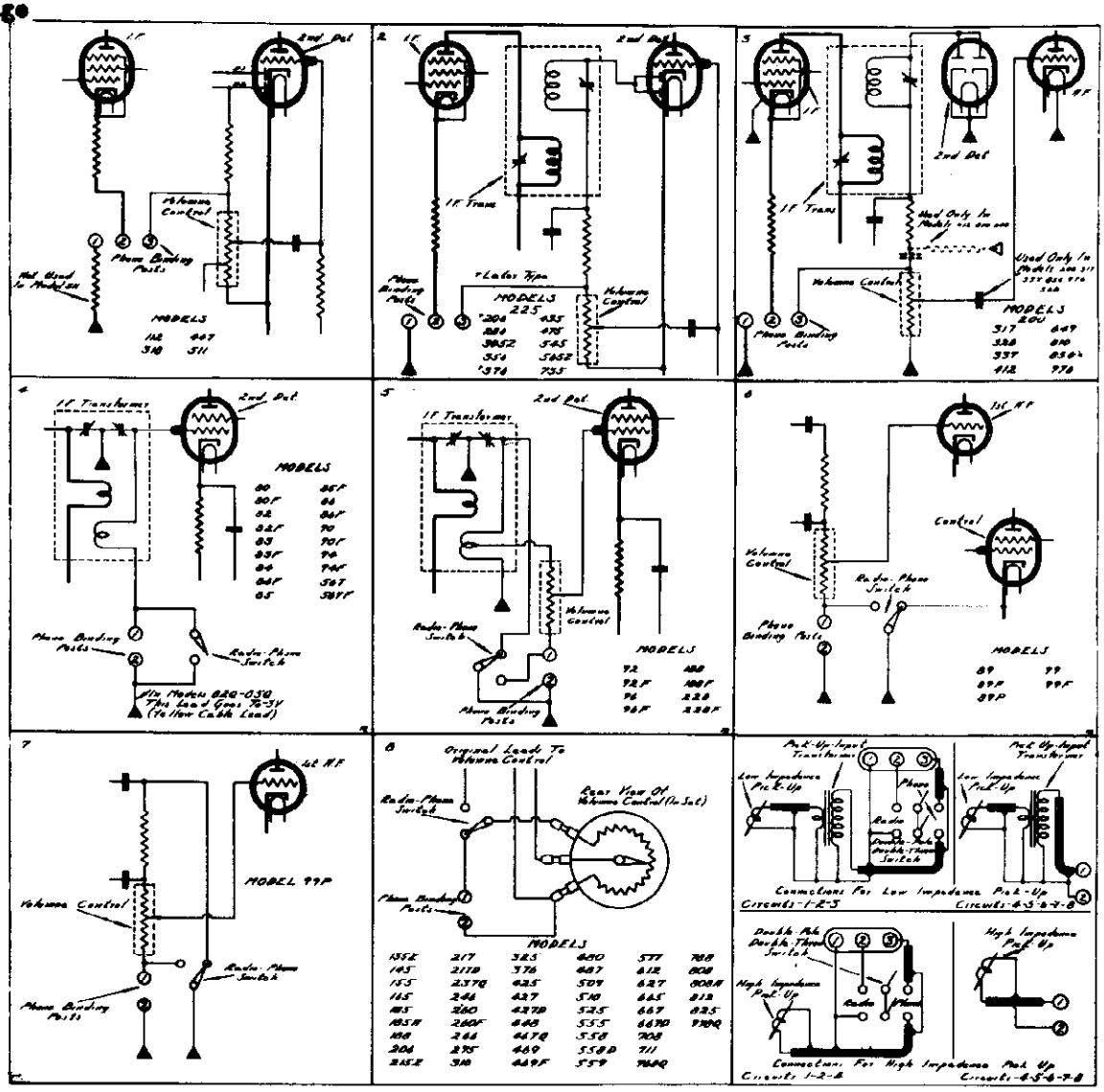

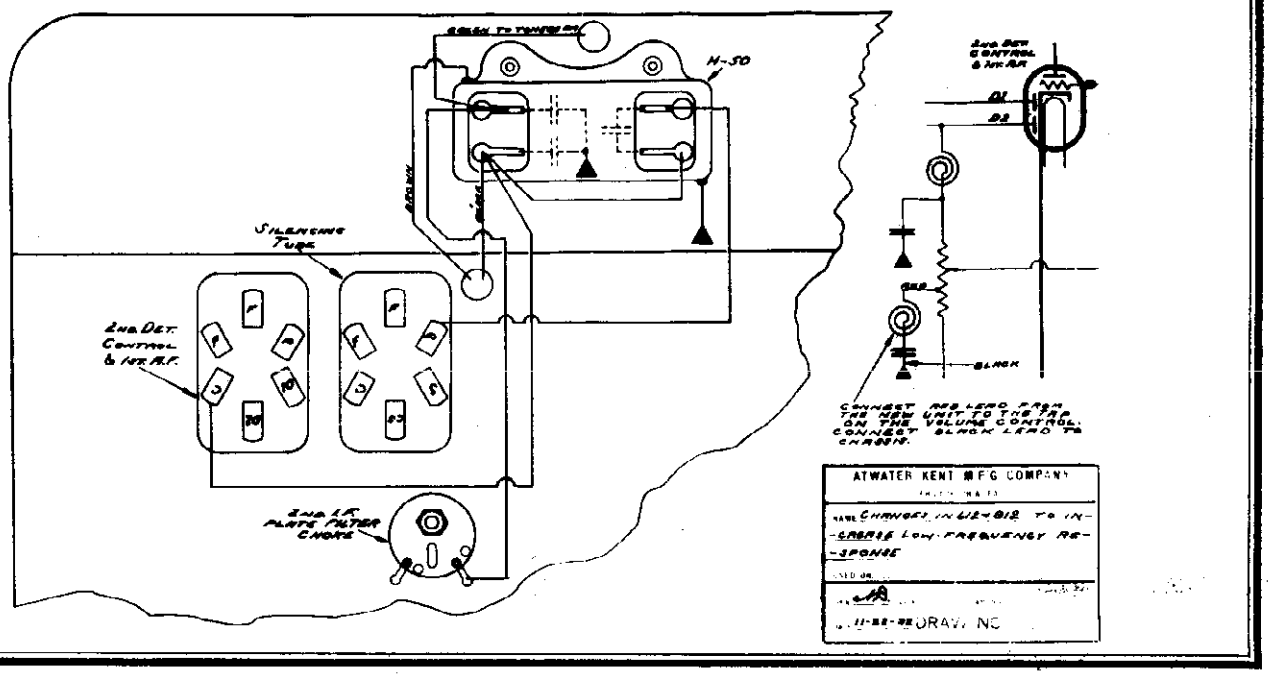

ATWATER KENT MFG COMPANY

NAME CHANGES IN 612-812 TO IN-CREASE LOW-FREQUENCY RE-SPONSE

DATED 11-22-32 ORAVILLE, OHIO

ATWATER KENT MFG. CO.

MODELS 2606, 2648
Schematic

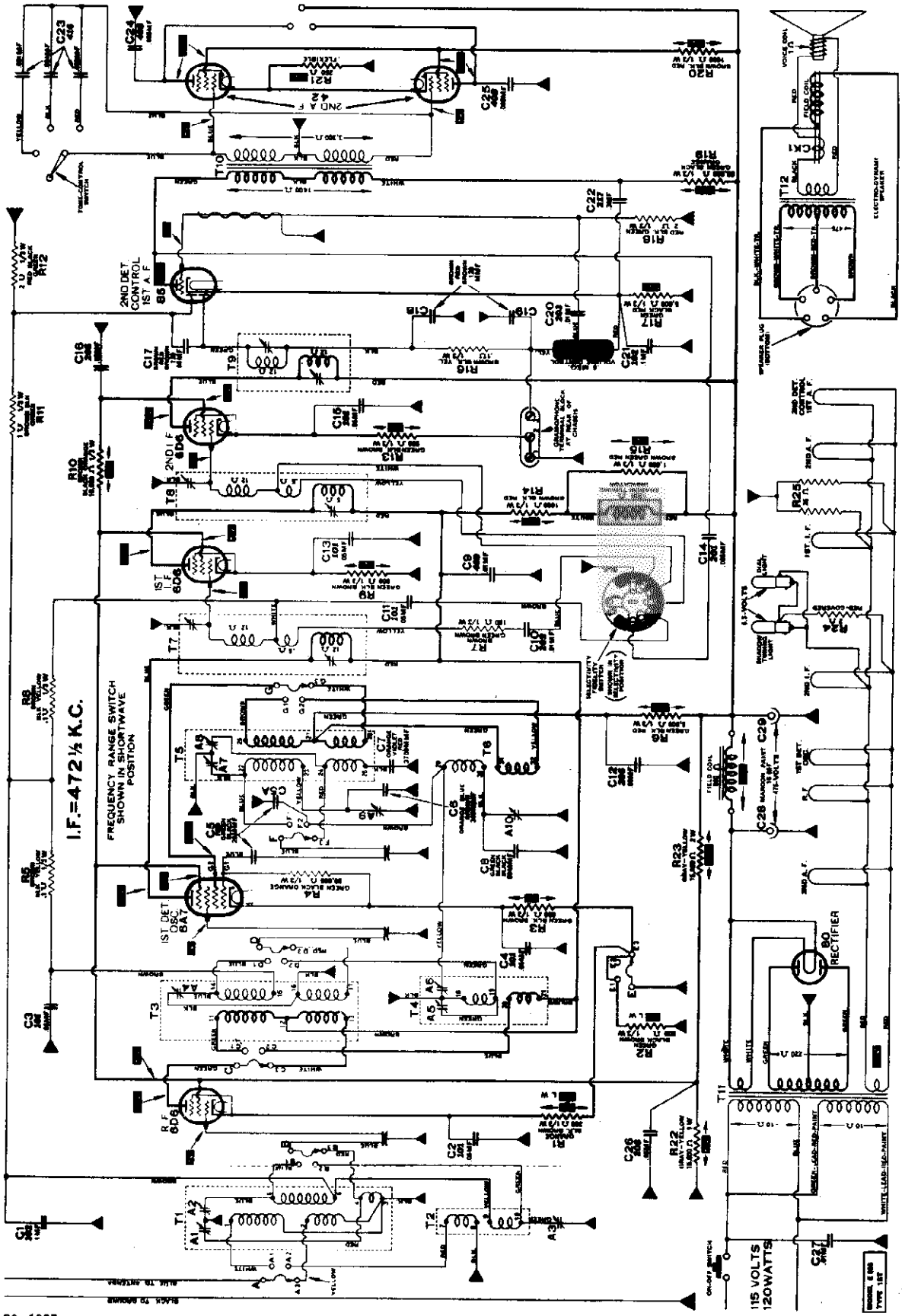

August 30, 1935.

©John F. Rider, Publisher

MODELS E608,E648
Socket,Trimmers
Alignment

ATWATER KENT MFG. CO.

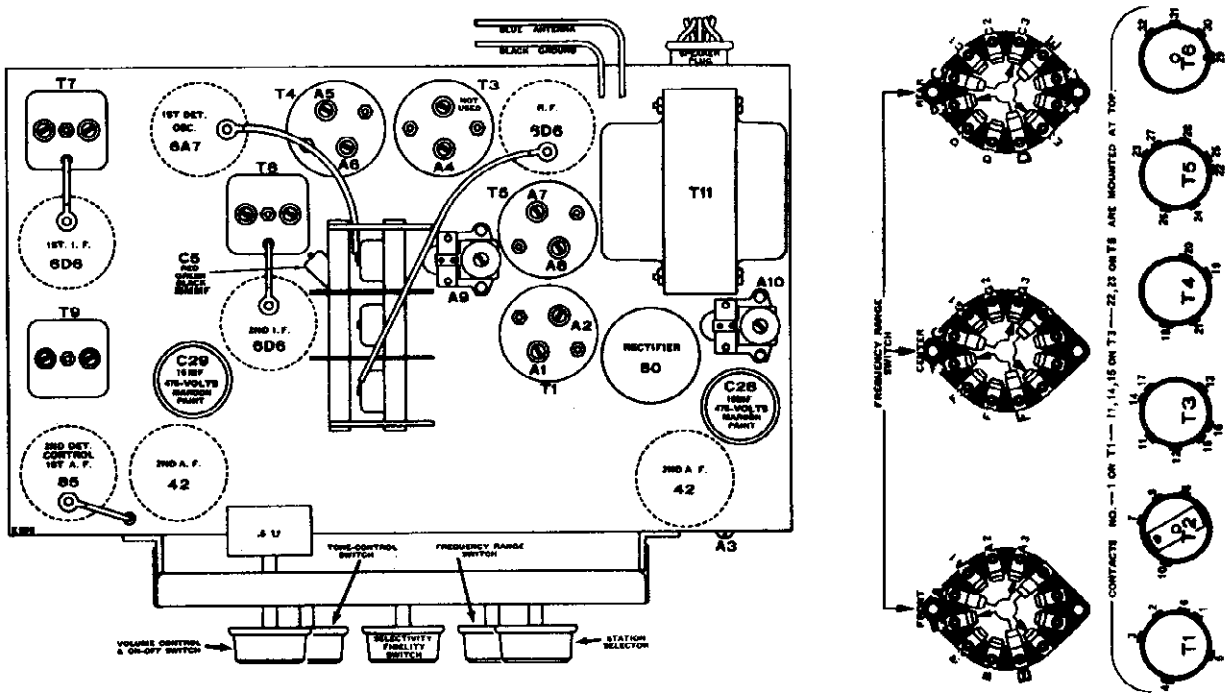

ADJUSTING TRIMMER CONDENSERS

Turn volume on full, turn tone control to "high", and turn switch to "selectivity." Use the weakest possible signal that will give a reading on a sensitive output meter.

I. F. TRIMMERS.

Connect I. F. test oscillator (472½ KC) to 2nd-I. F. grid by means of the regular I. F. coupling unit No. 42590. Peak two trimmers on top of T9.

Connect I. F. oscillator to 1st-I. F. grid. Peak two trimmers on T8.

Connect I. F. oscillator to 1st-detector grid. Peak two trimmers on T7.

DIAL POINTER ADJUSTMENT.

If the dial gear and indicator have not been tampered with, leave them alone; but if they have been changed in any way, reset as follows:

1. Loosen the two set screws which hold pointer gear on condenser shaft.
2. Turn condenser to minimum.
3. See illustration (Fig. 1). Place straight-edge gauge in vertical position with the long flat face against the front mounting plate of the variable condenser as shown. Turn the condenser until the front edge of the rotor spacing bar just touches the straight edge. Hold the condenser in this position and move the pointer arm so the pointer is at 1562 KC, after which tighten the set screws to hold the dial gear securely.
4. Loosen the screws which hold the pointer to the pointer arm, and adjust the pointer so that when the condenser is completely meshed, the pointer is at 535 KC.

Recheck at 1562 KC and repeat procedure 3 and 4, if necessary.

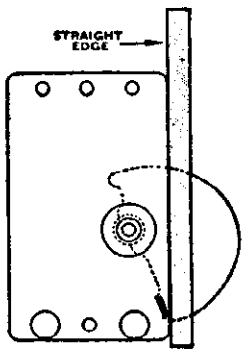

Fig. 1

This illustration shows the correct position of the variable condenser rotor for a dial-pointer setting of 1562 KC. The straight edge is held firmly against the front mounting plate of the variable condenser and the rotor is turned so the spacing bar (shown at lower edge of rotor) is just touching the straight edge. The straight edge is a strip of bakelite or hard rubber ¼" thick, ⅜" wide, and 6" long. The ⅜" side is held against the mounting plate.

R. F. TRIMMERS.

Connect an R. F. test oscillator to the antenna and ground terminals of set. Use the weakest possible oscillator signal that will give a reading on the output meter. Loosen the trimmer screws for the frequency range or ranges that are to be adjusted.

Short-wave range. Oscillator at 18 MC, dial pointer at 18 MC, peak A8 and A1.

Medium-wave range. Oscillator at 1500 KC, dial pointer at 1500 KC, peak A7, A4 and A2. Tune oscillator to 560 KC, turn dial to 560 KC, and peak A9. Repeat adjustment on A7 at 1500 KC, and A9 at 560 KC, if necessary.

Long-wave range. Oscillator at 405 KC, dial pointer at 405 KC, peak A6, A5 and A3. Tune oscillator to 160 KC, turn dial to 160 KC, and peak A10. Repeat adjustments on A6 at 405 KC and A10 at 160 KC, if necessary.

August 30, 1935.

©John F. Rider, Publisher

ATWATER KENT MFG. CO.

MODELS 649, P64
Chassis, Parts

MODELS 649 AND 649-P

29367	Variable condenser assembly
27832	Base cover
30048	Tone control switch assembly
28908	Shaft and blade for above
47340	Range switch
29409	Selectivity switch
27321	Volume control, .5 megohm
25689	Shadow meter complete
30053	Front panel assembly
31222	Escutcheon
29375	Dial plate only
29848	Lamp, 6.3-V., bayonet base
27254	Dial pointer
29547	Coil shield (T1, 2)
29548	Oscillator trans. shield (T3)
29619	I. F. T. shield (T4, 5, 6)
28349	Phono. terminal card
31183	Instruction sheet, P-1289
48040	Shipping container (649)
49050	Shipping container (649 RP)

ELECTROLYTICS

C23	25379	10 MF, 25-V.
C28,29	29691	15 MF, 475-V.

TRANSFORMERS

T1	44390	No. 1 R. F. T.
T2	44410	No. 2 R. F. T.
T3	44420	Oscillator transformer
T4	47720	No. 1 I. F. T.
T5	47730	No. 2 I. F. T.
T6	47740	No. 3 I. F. T.
T7	45590	Input transformer
T8	21370	Output transformer
T9	46270	Power transformer (S340)

TRIMMERS

29823	Double I. F. trimmer on T4 and T5	
29543	Double I. F. trimmer on T6	
44570	Double R. F. trimmer	
38770	Broadcast tracking trimmer (A6)	

RESISTORS

R22	21420	280 ohms, flexible
R26	46150	2 ohms, flexible
R27	45860	25 ohms, flexible

SOCKETS

21337	Speaker socket
30058	Universal 8-prong

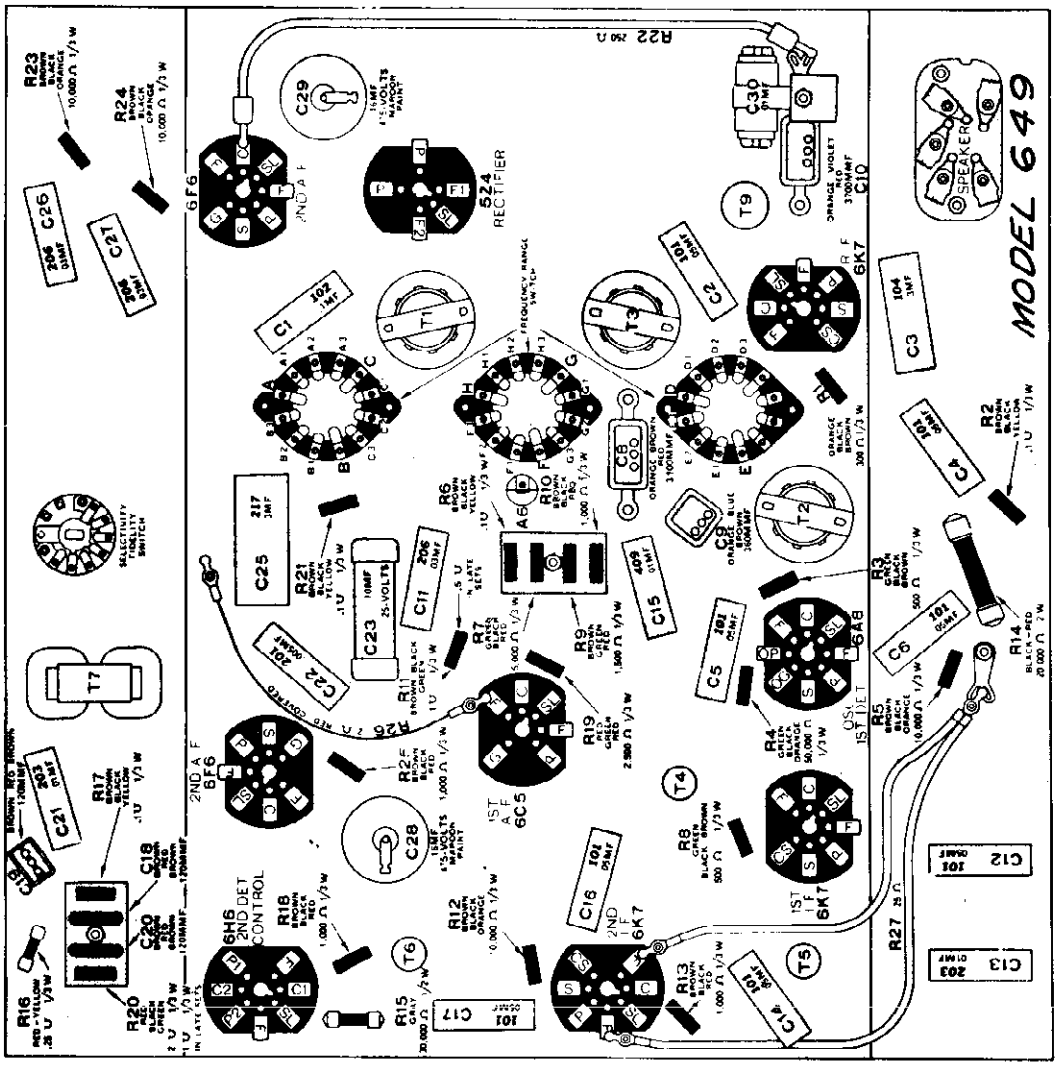

MODEL P649

Model P649 is same as standard Model 649, except for phono terminals and a universal power transformer No. 46330.

©John F. Rider, Publisher

MODELS 487, 487X
MODEL 509
MODELS 535, 725, P725, P725X

ATWATER KENT MFG. CO.

MODELS E606, E606X, E648, E648X
MODEL 648
Parts Lists

MODELS 487 AND 487X

29159	Range switch.....	
43580	Tone control switch	
58740	Sensitivity switch	
27628	Shaft and blade for above	
27521	Volume control	
25669	Shadow tuning indicator	
29158	Variable condenser assembly	
30051	Front panel assembly	
29205	Escutcheon	
29186	Dial plate	
29215	Dial frame and plate	

TUNING PARTS

Same as Model 518

TRANSFORMERS

T1	45520	No. 1 R.F.T., with trimmers
T2	45550	No. 2 R.F.T., with trimmers
T3	45540	Oscillator transformer, with trimmers
T4	29196	No. 1 I.F.T., less trimmers
T5	29202	No. 2 I.F.T., less trimmers
T6	29203	No. 3 I.F.T., less trimmers
T7	21672	Output transformer
T8	28521	Power transformer (487)
	28567	Power transformer (487X)

CONDENSERS

28051	8 MF., 475 V., electrolytic
27592	4-8-10 MF.
54660	2200 MMF.
27599	5700 MMF.

TRIMMERS

39430	Double R.F. trimmer
32880	Double I.F. trimmer
39420	Tracking trimmer (A9)

SHIELDS

25056	I.F.T. shield
27955	R.F.T. shield
22685	Tube shield
23745	Auxiliary shield

SOCKETS

24492	4 prong
24494	6 prong
26111	7 prong
18449	Fuse socket

MISCELLANEOUS

29187	Instruction folder, F-1235
28456	Shipping container
28946	Knob (without dot)
28947	Knob (with dot)
28065	Knob spring

487 SPEAKER NO. 41800

25525	Small choke (CK1)
21672	Output transformer
20757	Diaphragm
21260	Field coil

MODEL 509

For parts not listed below, refer to Model 511

27975	Range switch.....
29144	Volume control
30082	Front panel assembly
29108	Escutcheon
27837	Dial plate
28299	Dial lamp
28946	Knob, 1 used
28947	Knob, 4 used
28065	Knob spring
29061	Set of decals for knobs
29085	Customer instruction folder F-1224
29084	Dealer instruction folder F-1225
29081	Base cover
21537	Speaker socket

TRANSFORMERS

40310	Tuning motor transformer (also used in Model 511)
42980	Audio transformer
42980	Power transformer
21570	Output transformer

CHOKE

42970	Filter choke

509 SPEAKER NO. 46600

20737	Diaphragm
34630	Field coil
21570	Output transformer
20657	Cable and plug
18582	Plug only

MODELS 535, 725, P725, and P725X

For parts not listed below, refer to Models 525 and 455

30084	Cabinet with screen (725).....
31822	Screen and gasket (725).....
29759	Escutcheon and crystal.....
31766	Variable condenser assembly
29482	Volume control, .5 meg
29676	Range switch
32056	Knob, red and yellow dots
45570	Tone control switch
28549	Phono terminal card
31842	Instruction sheet, F-1518
49490	Shipping container, 535
49480	Shipping container, 725

TUNING PARTS

Same as Models 485Q, 515Q, except dial lamp which is No. 29648

TRANSFORMERS

T1	49510	R.F. transformer
T2	49520	Oscillator transformer
T3	47750	No. 1 I.F.T.
T4	44950	No. 2 I.F.T.
T5	45610	Power transformer (535 and 725)
	48220	Power transformer (P725, P725X)
T6	21672	Output transformer
	49550	Wave trap assembly

TRIMMERS

A1	31845	Wave trap trimmer
A2	28845	Front of chassis
A5	39650	Rear of chassis
	29545	Double I.F. Trimmer

MODELS E606, E606X, E648 and E648X

(European Compact and Console)

30056	Cabinet with screen (E606)
31062	Screen and gasket (E606)
29618	Volume control
30048	Tone control switch
28908	Shaft and blade
29409	Selectivity switch
29159	Range switch
29567	Variable condenser
30067	Front panel assembly, (E648)
30069	Front panel assembly (E606)
29818	Dial plate
31617	Tube shield (half)
22683	Tube shield
23743	Auxiliary tube shield
25689	Shadow tuning meter

TUNING PARTS

Same as Models 649, etc.

TRANSFORMERS

T1	46880	No. 1 R.F.T., broadcast and short wave
T2	46860	No. 1 R.F.T., long wave
T3	46850	No. 2 R.F.T., broadcast and short wave
T4	46890	No. 2 R.F.T., long wave
T5	46870	Oscillator, broadcast and short wave
T6	46910	Oscillator, long wave
T7	44710	No. 1 I.F.T.
T8	44720	No. 2 I.F.T.
T9	44730	No. 3 I.F.T.
T10	45590	Audio input transformer
T11	46530	Power transformer
T12	21570	Output transformer

SHIELDS

27355	Shield for T6
29619	I.F.T. shield
29547	Shield for T1, T3
29546	Shield for T5, T4

TRIMMERS

44570	Double R.F. trimmer
29825	Double I.F. trimmer
38770	Trimmers A9 and A10
28643	Trimmer A8

ELECTROLYTICS

C28, C29, 29091 16 MF, 475 V.

SOCKETS

24492	4 prong
24494	6 prong
26111	7 prong
21537	Speaker socket

MISCELLANEOUS

29681	Instruction folder F1282
28946	Knob without dot
28947	Knob with dot
29648	Dial lamp 6.5 volts, bayonet base

E606 SPEAKER No. 52500

23657	Small choke
45870	Field coil
19465	Diaphragm
21570	Output transformer

E648 SPEAKER No. 50100

25525	Small choke
45270	Field coil
20757	Diaphragm
21570	Output transformer

MODEL 648

Model 648 is similar to Model 649, but with glass tubes.

29567	Variable condenser
29618	Volume control
30048	Tone control switch
28908	Shaft and blade
29159	Range switch
29409	Selectivity switch
30086	Front panel assembly
29407	Dial plate and holder
29373	Dial plate only
29648	Dial lamp 6.3 V., bayonet base
27254	Dial pointer
28946	Knob without dot
28947	Knob with dot
29412	Instruction sheet F-1246

TUNING PARTS

Same as Model 649, etc.

TRANSFORMERS

T1	44390	No. 1 R.F.T.
T2	44410	No. 2 R.F.T.
T3	44420	Oscillator transformer
T4	44710	No. 1 I.F.T.
T5	44720	No. 2 I.F.T.
T6	44730	No. 3 I.F.T.
T7	45590	Audio input transformer
T8	21570	Output transformer
T9	46270	Power transformer

CONDENSERS

29691	16 MF, 475 V., electrolytic
25579	10 MF, 25 V., electrolytic

TRIMMERS

29825	Double I.F. trimmer
44570	Double R.F. trimmer
38770	Tracking trimmer

648 SPEAKER No. 50100

45270	Field coil
21570	Output transformer
20737	Diaphragm

©John F. Rider, Publisher

ATWATER KENT MFG. CO.

MODELS 657Q, 747Q
Schematic

MODELS 657Q AND 747Q

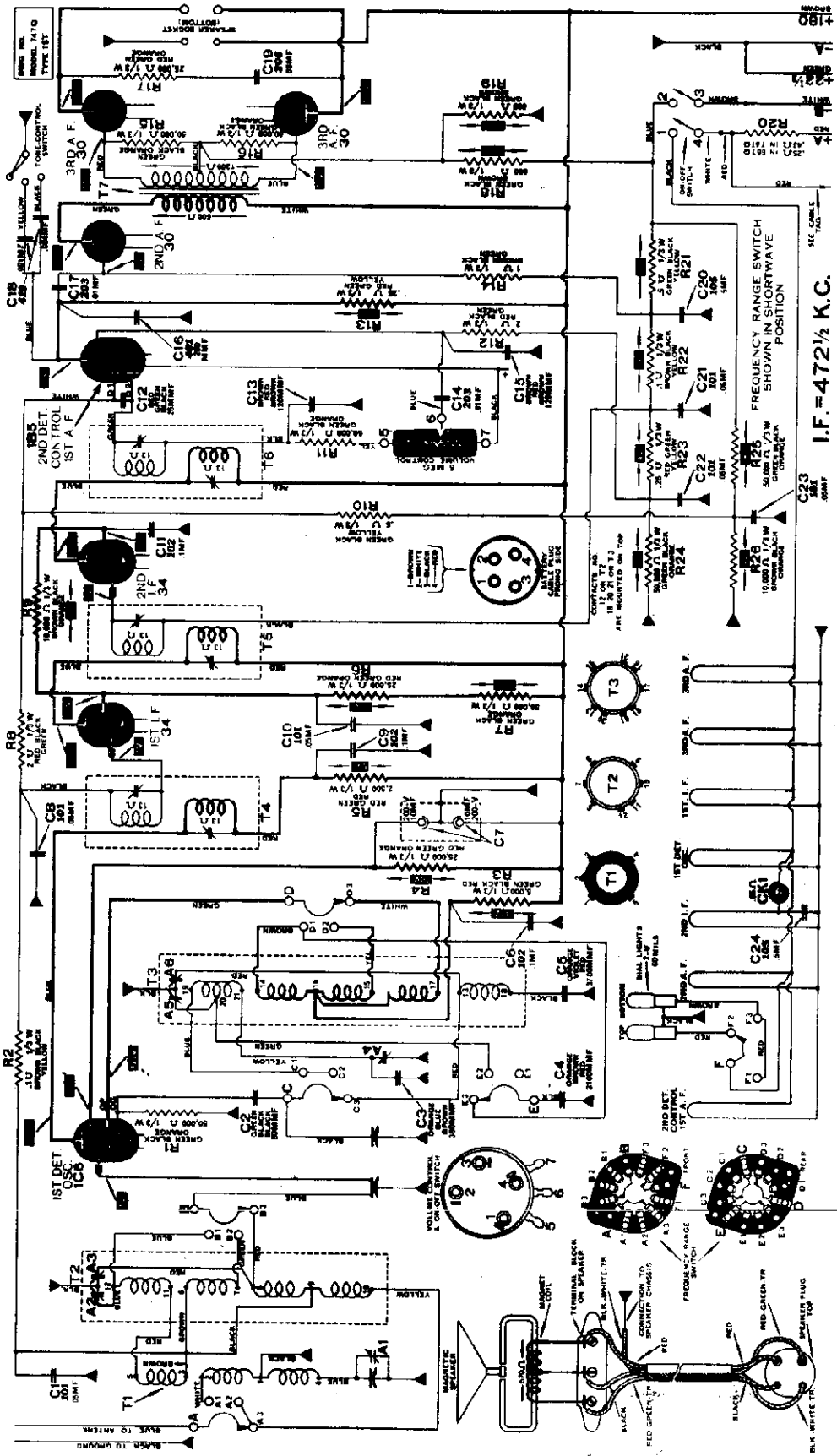

March 25, 1936.

MODELS 657Q, 747Q
Socket, Trimmers
Chassis, Alignment

ATWATER KENT MFG. CO.

MODELS 657Q, 747Q

A1—Pre-selector, 1500 KC.
A2—1st-detector, 1500 KC.
A3—1st-detector, 18 MC.
A4—Oscillator tracking, 560 KC.
A5—Broadcast oscillator, 1500 KC.
A6—Short-wave oscillator, 18 MC.
There are six I. F. trimmers, two on top of each I. F. transformer (T4, 5 and 6). These are peaked 472½ KC.

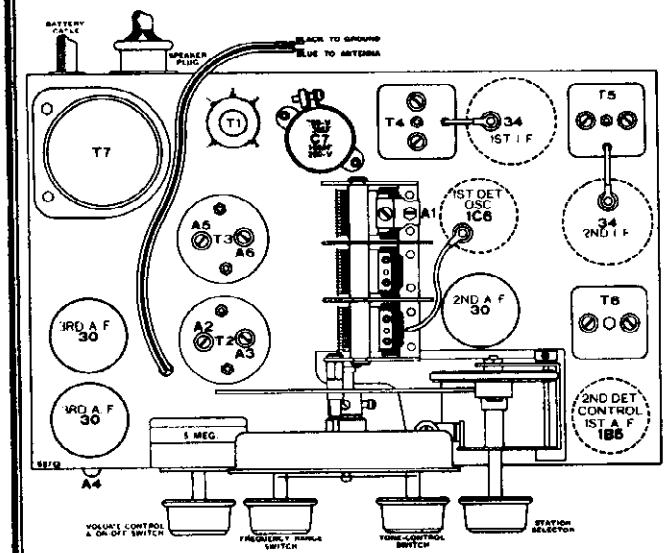

I. F. TRIMMERS

Connect signal generator (472½ KC) to 2nd-I. F. grid cap by means of No. 42590 coupling unit. Peak two trimmers on top of T6 (3rd I. F. transformer).

Connect signal generator to cap of 1st-I. F. tube and peak two trimmers on top of T5 (2nd I. F. transformer).

Connect signal generator to cap of 1st-dectector tube and peak two trimmers on top of T4 (1st I. F. transformer).

DIAL POINTER ADJUSTMENT

With the variable condenser fully meshed, the dial pointer should be set at 535 KC.

R. F. TRIMMERS

Connect signal generator to antenna and ground terminals of set. Loosen R. F. trimmer screws.

In location where severe electrical interference is present, it is necessary, when aligning R. F. trimmers, to connect a 40,000-ohm resistor in series with a .02 M. F. condenser from the grid cap of the 1st-I. F. tube to chassis. This reduces the I. F. sensitivity and permits use of a stronger output from the signal generator to over-ride the local noise level without bringing the AVC into action.

BROADCAST RANGE

Connect signal generator to antenna and ground of set, using a 250 MMF condenser in series with the antenna lead. With signal generator and dial at 1500 KC, peak the broadcast trimmers A5, A2 and A1 (oscillator, detector, and antenna). Use the first peak as A5 is screwed in from a loose position. Tune generator to 560 KC and peak broadcast tracking trimmer A4 while rocking variable condenser one division around the 560 KC mark. Repeat adjustments at 1500 and at 560 KC if necessary.

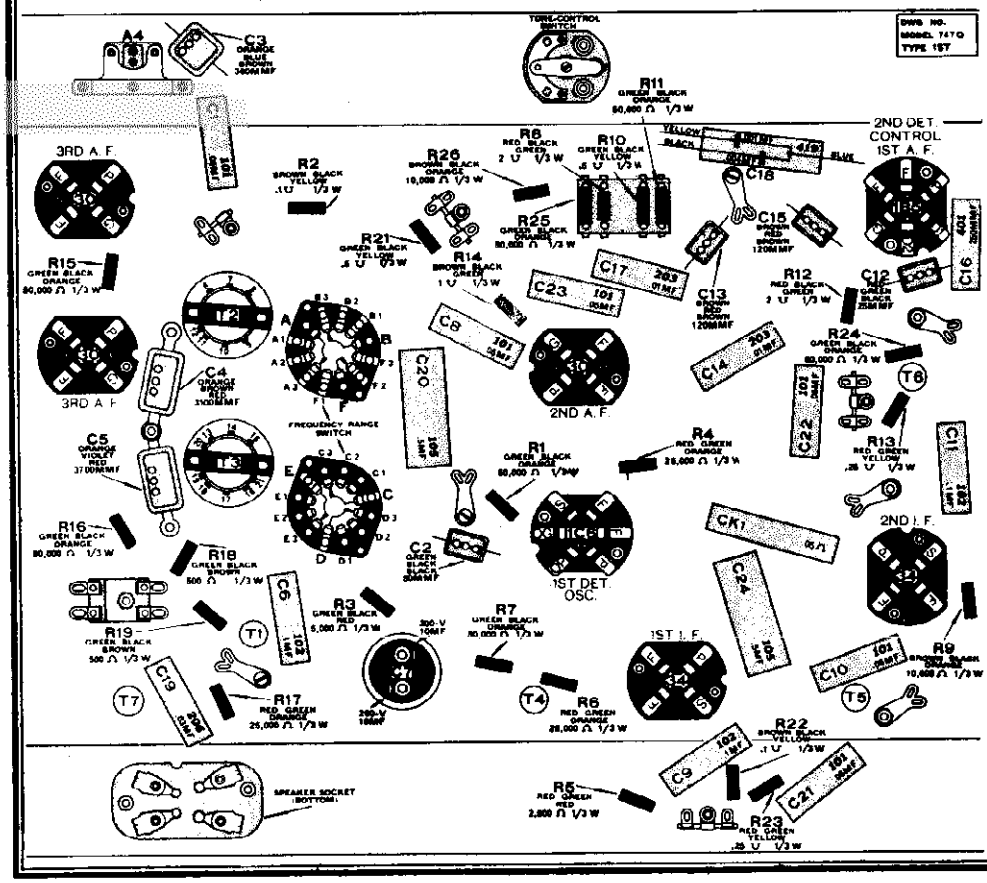

SHORT-WAVE RANGE

Connect a 400-ohm resistor in series with the generator pick-up lead at the antenna terminal of set. With signal generator and dial at 18 MC peak the short-wave oscillator trimmer A6, using the first peak as this trimmer is screwed down from a loose position.

Check to determine that A6 has been adjusted to the correct point by tuning in the double spot at 17.05 MC. The signal generator should be left at 18 MC while making this check.

Retune the set to 18 MC and while slowly rocking the variable condenser, peak the short-wave detector trimmer A3. A better method of setting A3 is to connect a 400 MMF vernier-type variable condenser across the oscillator section of the gang condenser (*after* setting A6) and increase the capacity of this extra condenser until the 18 MC signal is again heard. Then peak A3. This method avoids inter-locking between the detector tuned circuit and the oscillator tuned circuit.

POLICE RANGE

No trimmers on this range.

©John F. Rider, Publisher

ATWATER KENT MFG. CO.

MODELS 725 (110v)
725X(230v)
Schematic

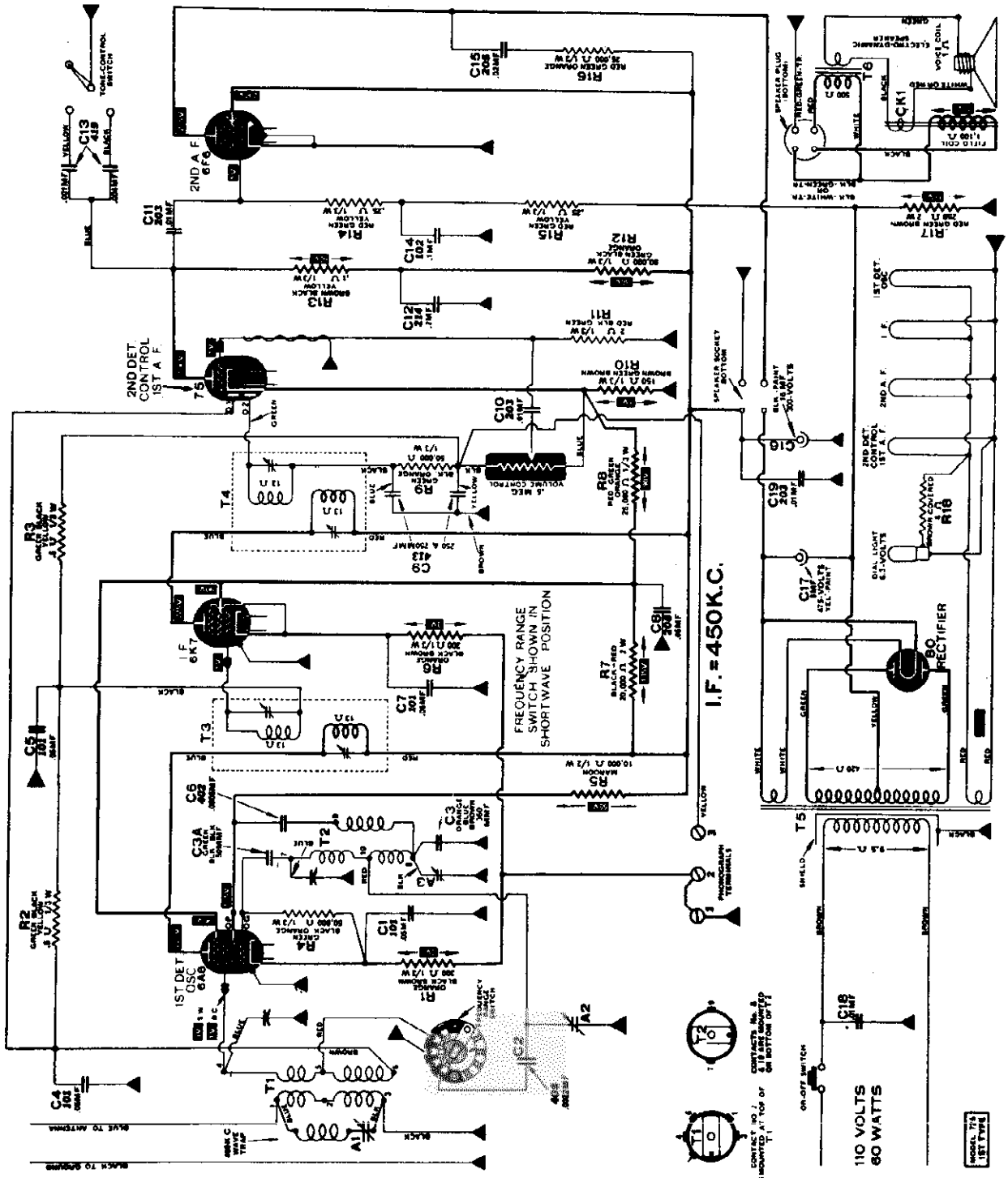

©John F. Rider, Publisher

MODEL 725
Socket, Trimmers
MODEL 856
Chassis Layout

ATWATER KENT MFG. CO.

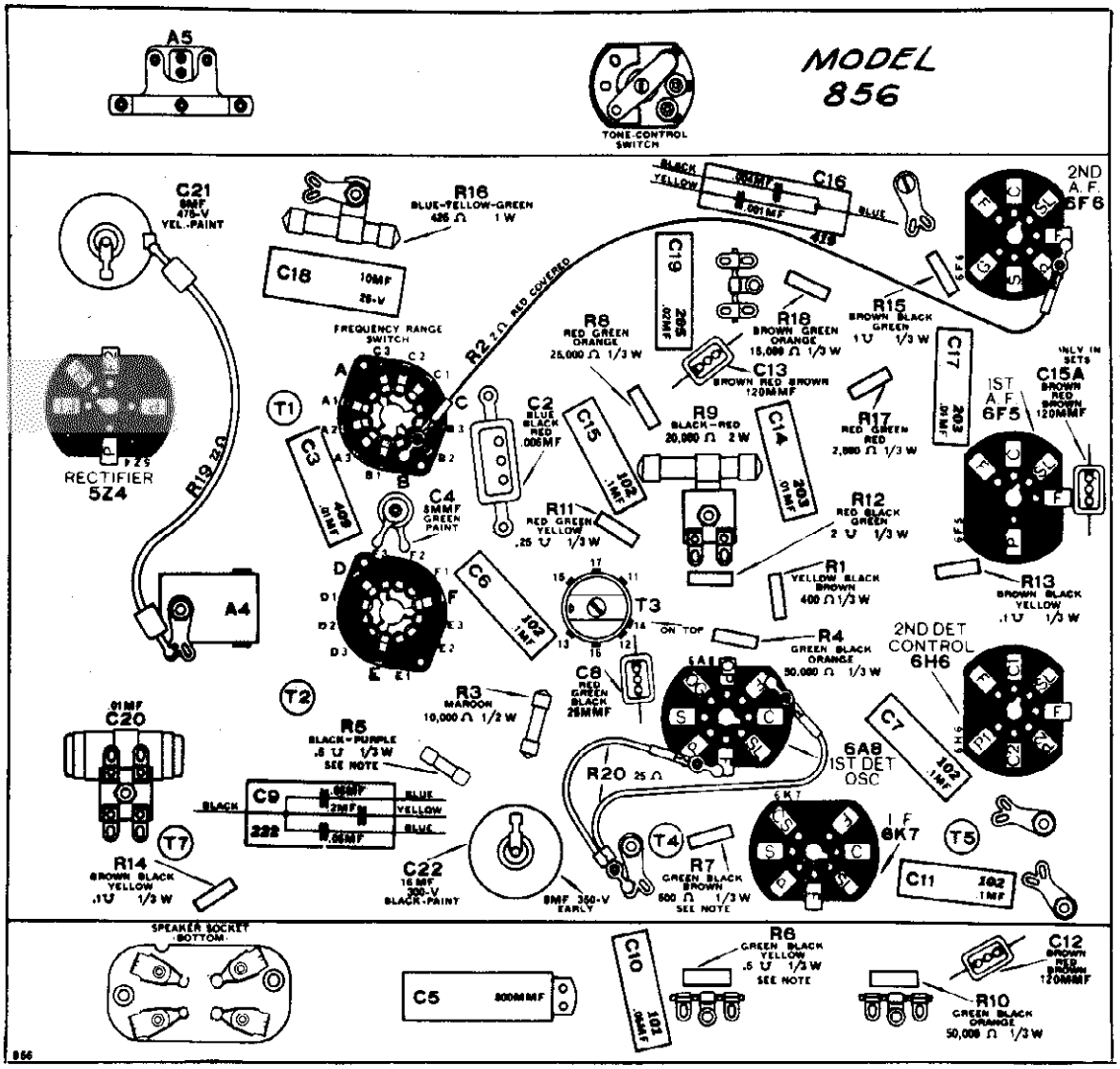

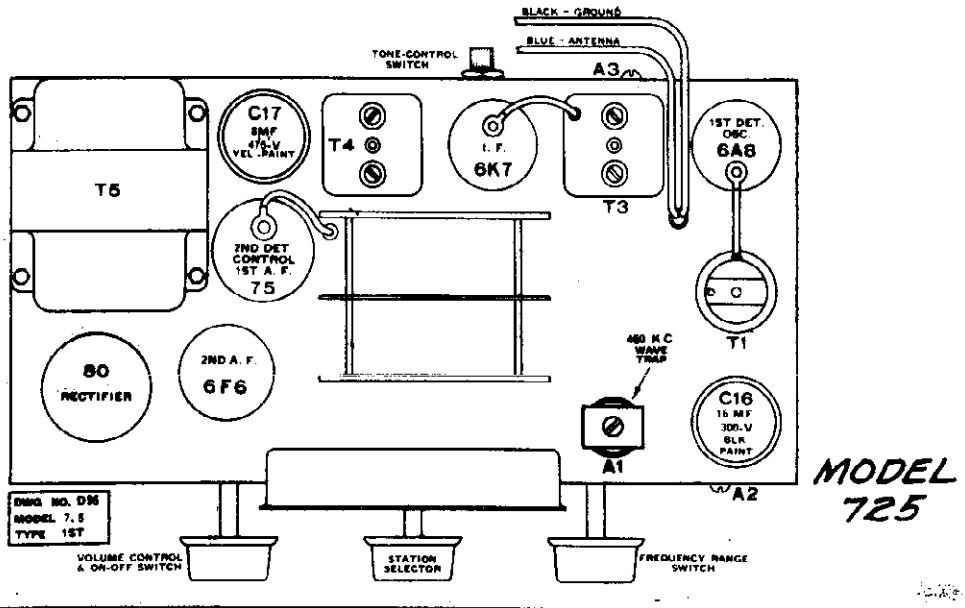

©John F. Rider, Publisher

MODELS P755,P875
Schematic

ATWATER KENT MFG. CO.

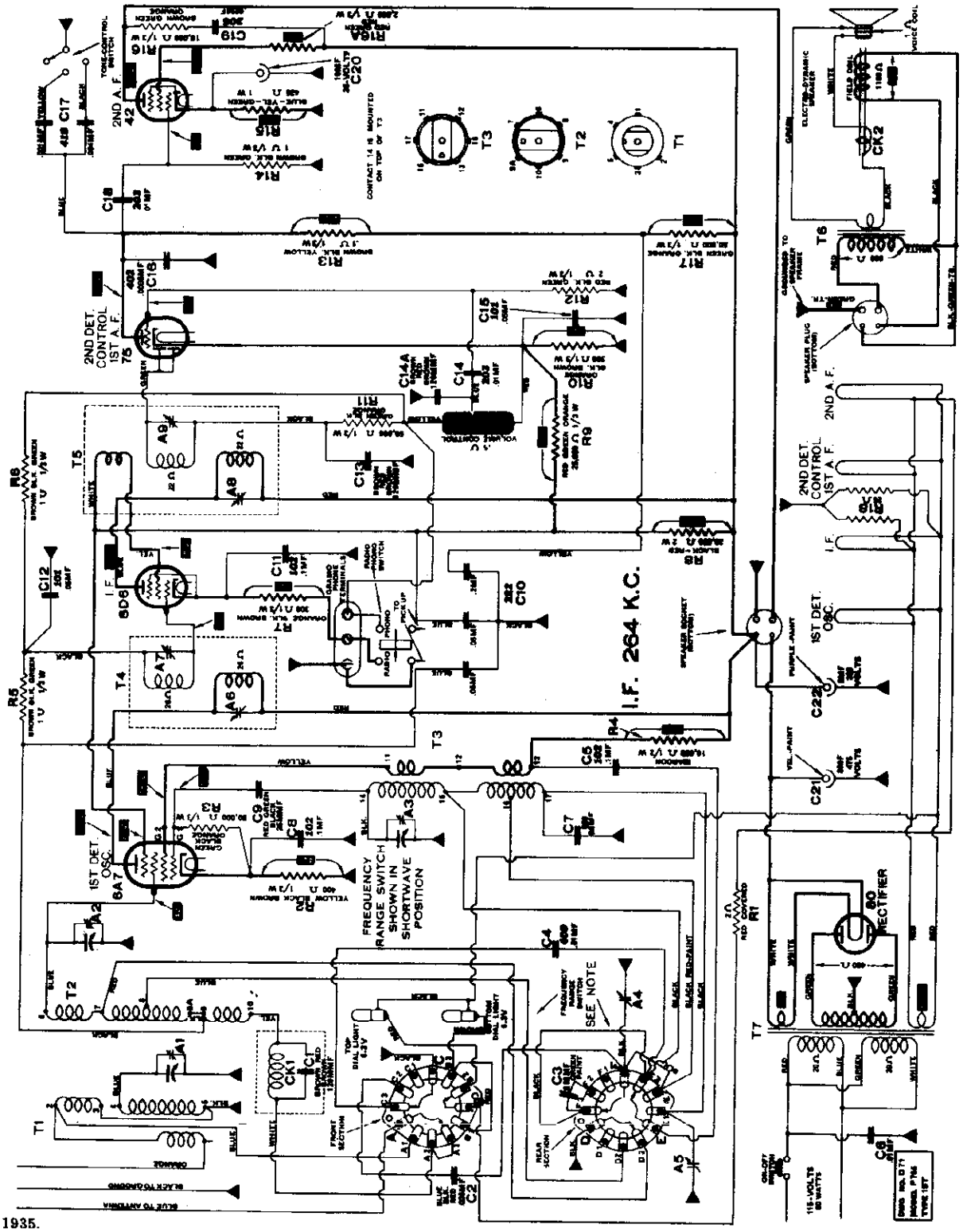

August 2, 1935.

©John F. Rider, Publisher

MODELS P755,P875
Socket,Trimmers
Chassis,Alignment

ATWATER KENT MFG. CO.

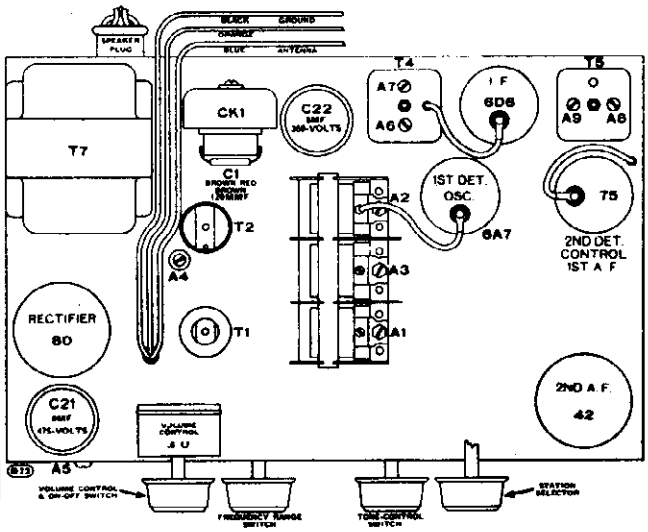

ADJUSTING TRIMMER CONDENSERS

I. F. TRIMMERS.

Connect I. F. test oscillator (264 KC) to I. F. tube by means of regular I. F. coupling unit. Peak A9, A8. Connect I. F. oscillator to 1st-detector tube and peak A7, A6.

DIAL POINTER ADJUSTMENT.

With rotor of variable condenser fully meshed, dial indicator should be at 535 KC.

R. F. TRIMMERS.

Connect an R. F. oscillator to antenna and ground of set.

Short-wave range. With oscillator and dial at 15 MC, peak A3. Use the first point on the trimmer, as it is screwed in from a loose or minimum-capacity position.

Police range. No trimmers on this range.

Broadcast range. With oscillator and dial at 1500 KC, peak A4, A2 and A1. With oscillator and dial at 560 KC, peak A5.

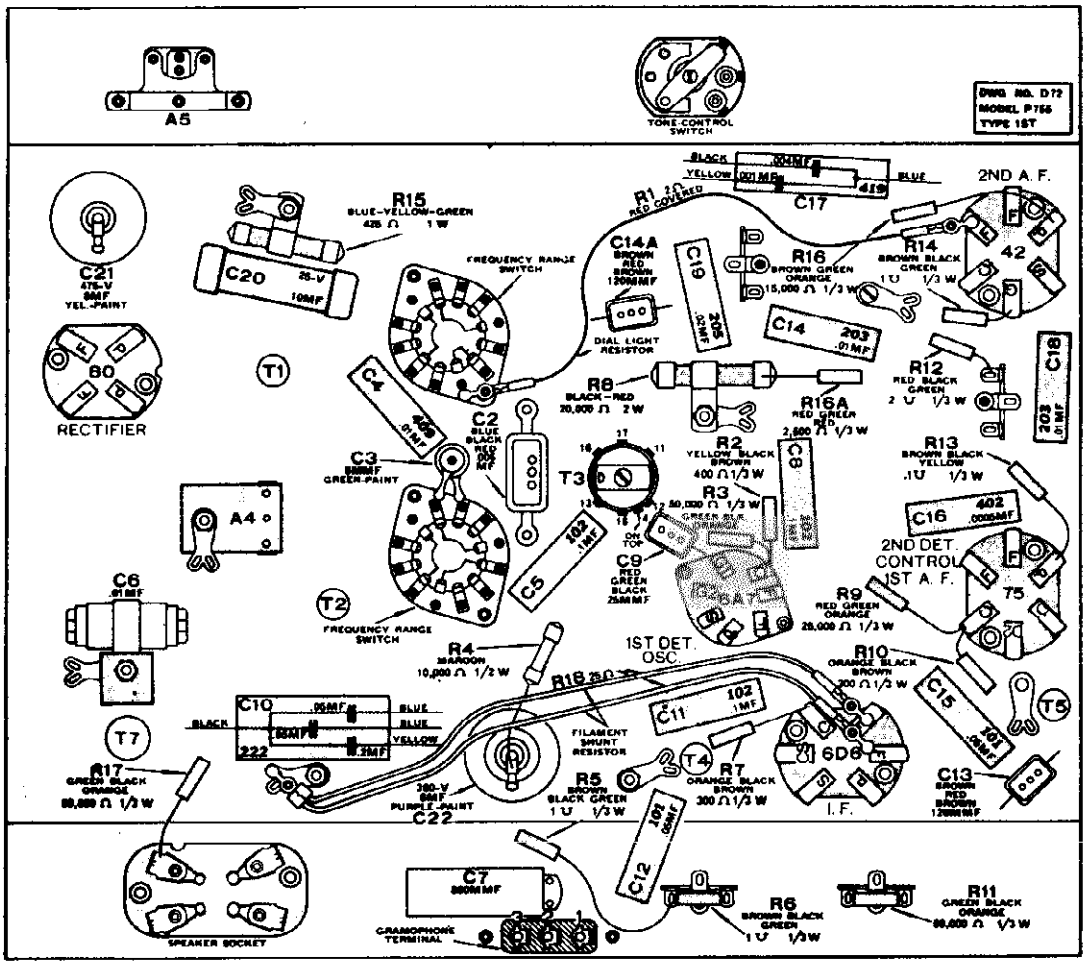

August 2, 1935.

©John F. Rider, Publisher

ATWATER KENT MFG. CO.

MODEL E-765
Schematic

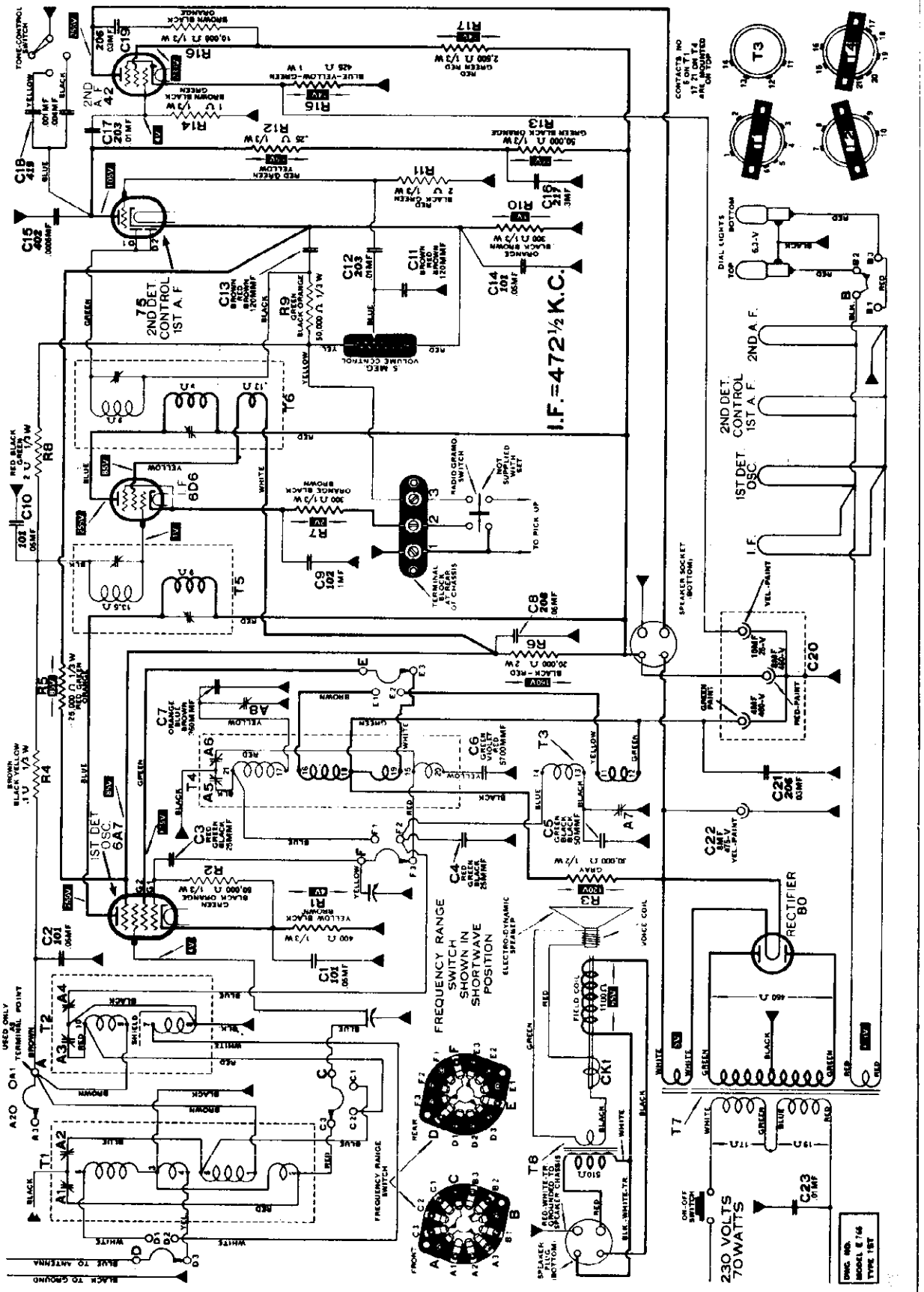

September 25 1935.

©John F. Rider, Publisher

MODEL B-765
Socket, Trimmers
Chassis, Alignment

ATWATER KENT MFG. CO.

ADJUSTING TRIMMER CONDENSERS

Turn volume control full on, turn tone control to "high," and use the weakest possible signal that will give a reading on a sensitive output meter.

I. F. TRIMMERS.

Connect an I. F. test oscillator (472½ KC) to the I. F. grid by means of the regular I. F. coupling unit No. 42590. Peak the two trimmers on top of T6. Connect I. F. oscillator to 1st-detector grid and peak the two trimmers on T5.

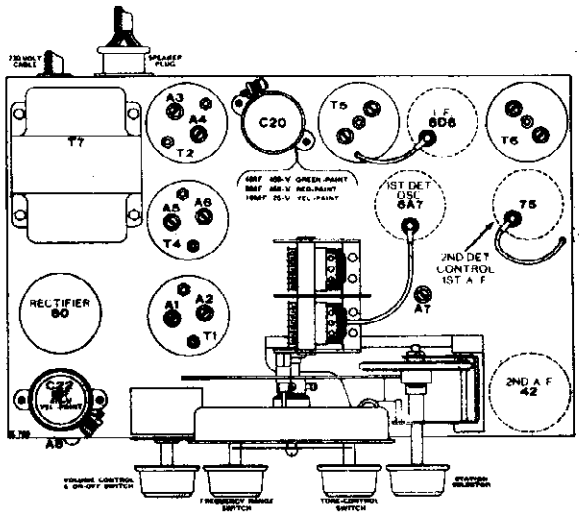

DIAL POINTER ADJUSTMENT.

With the variable condenser fully meshed, the dial pointer should be set at 538 KC.

R. F. TRIMMERS.

Connect an R. F. test oscillator to the antenna and ground leads of set. Loosen the trimmer screws for the range or ranges that are to be adjusted.

Short-wave range. Oscillator and dial at 18 MC, peak A6 and A1.

Long-wave range. Oscillator and dial at 405 KC, peak A4 and A3. Oscillator and dial at 160 KC, peak A7.

Medium-wave range. Oscillator and dial at 1500 KC, peak A5 and A2. Oscillator and dial at 540 KC, peak A8.

A1—1st-detector, 18 MC.
A2—1st-detector, 1500 KC.
A3—1st-detector, 405 KC.
A4—Oscillator, 405 KC.
A5—Oscillator, 1500 KC.
A6—Oscillator, 18 MC.
A7—Tracking, 160 KC.
A8—Tracking, 540 KC.

There are four I. F. trimmers, two on top of each I. F. transformer (T5 and T6). These are adjusted at 472½ KC.

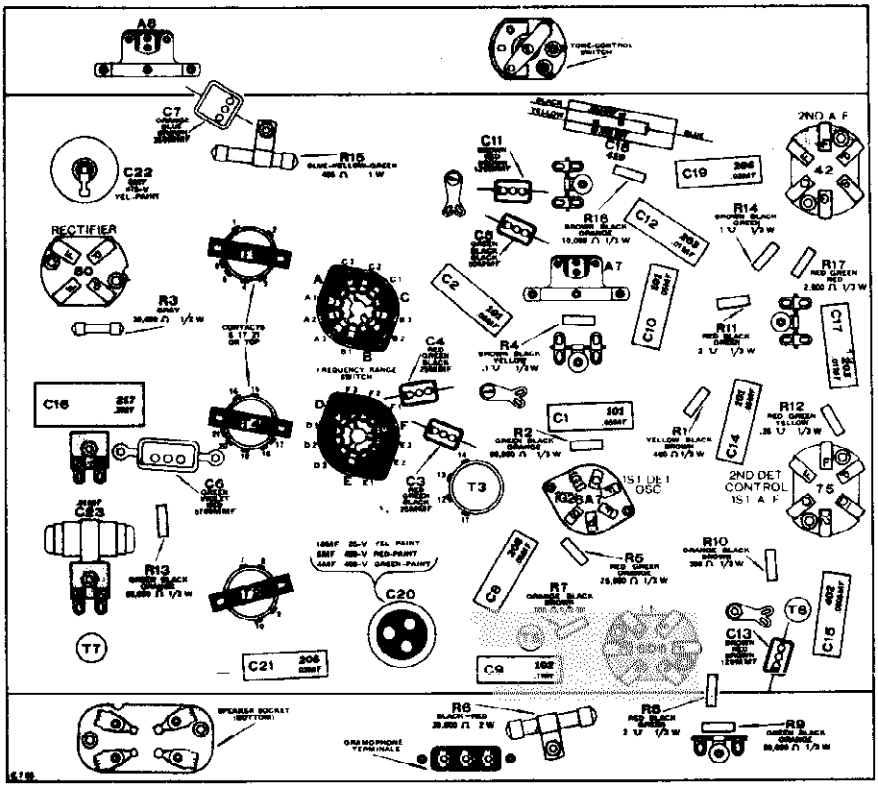

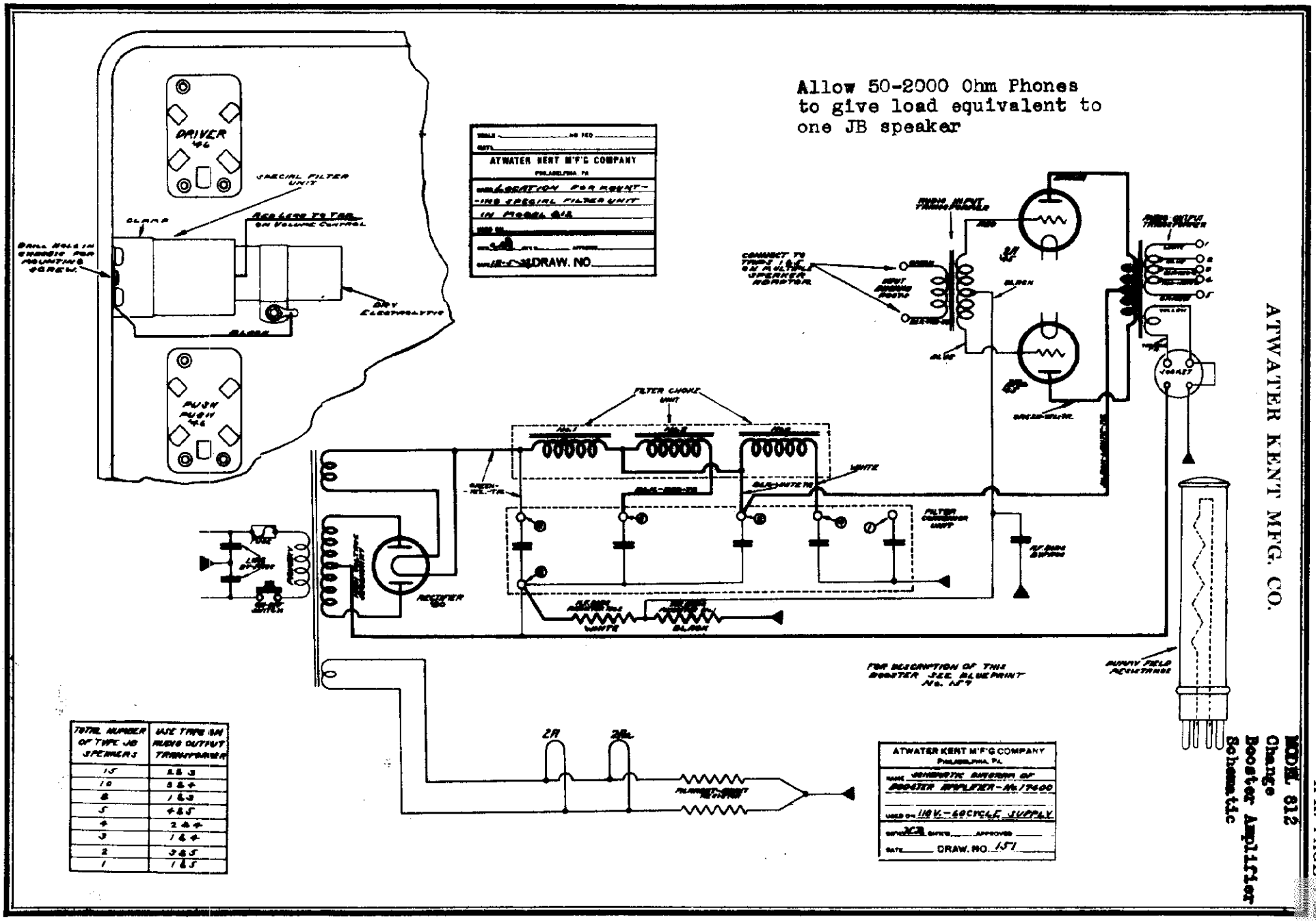

TOTAL NUMBER OF TYPE JB SPEAKERS	MAKE TYPE AND RADIO OUTPUT TRANSFORMER
15	2 & 3
10	3 & 4
8	1 & 3
5	4 & 5
4	2 & 4
3	1 & 4
2	3 & 5
1	1 & 5

ATWATER KENT MFG. CO.

MODEL 612
Change
Booster Amplifier
Schematic

A-K. PAGE

MODEL P710
MODELS P755,P755X
P875,P875X

ATWATER KENT MFG. CO.

MODELS E765,E765X
MODEL 810
MODELS 856,976
Speaker Data,Parts Lists

MODEL P710

27581	Volume control
29409	Selectivity switch
44450	Range switch
29180	Tone control switch
28157	Shaft and blade
28429	Variable condenser
29476	Dial plate and frame
28488	Instruction folder P-1256

TUNING PARTS

Tuning parts are same as for Model 810

CONDENSERS

29031	8 MF, 475 V., electrolytic
27583	16 MF, 500 V., electrolytic
28584	8 MF, 500 V., electrolytic
29964	10-10 MF, 25 V., electrolytic
27990	3700 MMF
29805	2800 MMF
29804	1600 MMF

FILTER CHOKE

44610	Filter choke

TRIMMERS

29140	Strip of four trimmers
26770	Tracking trimmer (2)
44570	Double R.F. trimmer
29823	Double I.F. trimmer

SOCKETS

21557	Speaker socket
24492	4 prong
24495	5 prong
24494	6 prong
26111	7 prong

SHIELDS

28685	Tube shield
26745	Auxiliary tube shield
29547	Shield for T1, T3
29546	Shield for T2, T4
27555	Shield for T5, T6
29619	I.F.T. shield

710 SPEAKER No. 40600

28243	Diaphragm
44440	Field coil
44460	Output transformer

MODELS P755, P755X, P875, and P875X

30047	Cabinet with screen (P755)
29982	Screen and gasket (P755)
29759	Escutcheon and crystal
28946	Knob without dot
28947	Knob with dot
28065	Knob spring
29525	Instruction sheet P-1257
29425	Variable condenser
29648	Dial lamp 6.3 V., bayonet base

TUNING PARTS

Same as Models 856, 976 with exception of dial plate which is No. 29509 in Model P755, and No. 29978 in Model P875.

42750	Tone control switch
29101	Shaft and blade for above
28986	Range switch
29041	Volume control

TRANSFORMERS

T1	45060 No. 1 R.F.T.
T2	45070 No. 2 R.F.T.
T3	45080 Oscillator transformer
T4	45420 No. 1 I.F.T. complete
T5	45430 No. 2 I.F.T. complete
T6	21672 Output transformer
T7	49630 Power transformer
	41020 Wave trap assembly

CONDENSERS

29031	8 MF, 475 V., electrolytic
27583	16 MF, 500 V., electrolytic
25579	10 MF, 25 V., electrolytic

TRIMMERS

28118	Double I.F. trimmer (T4)
28645	Double I.F. trimmer (T5)
26680	Tracking trimmer (A5)
28845	Oscillator trimmer (A4)

SOCKETS

24492	4 prong
24494	6 prong
21556	Speaker socket
26111	7 prong

P 755 SPEAKER NO. 41900
P 875 SPEAKER NO. 41900

MODELS E765 and E765X

30047	Cabinet with screen
29982	Screen and gasket
29759	Escutcheon and crystal
28946	Knob, without dot
28947	Knob, with dot
28677	Instruction sheet P-1279
31107	Dial plate
29843	Variable condenser
28961	Volume control
20095	Volume control nut
42750	Tone control switch
29101	Shaft and blade
45170	Dial lamp socket
29846	Dial lamp 6.5 V bayonet base
46520	Range switch

TUNING PARTS

Same as Models 856, 976, etc.

TRANSFORMERS

T1	47140 R.F.T. broadcast and short wave
T2	47180 R.F.T., long wave
T3	47170 Osc. trans., long wave
T4	47150 Osc. trans., B.C. and S.W.
T5	45250 No. 1 I.F.T.
T6	45260 No. 2 I.F.T.
T7	49830 Power transformer
T8	21672 Output transformer

CONDENSERS

28031	8 MF, 475 V., electrolytic
27592	4-8 MF, 450 V., 10 MF, 25 V.

SOCKETS

24492	4 prong
24494	6 prong
26111	7 prong
21556	Speaker socket

TRIMMERS

29830	(A7 and A8)
44570	Double R.F. trimmer
29729	Double I.F. trimmer

E765 SPEAKER NO. 41900

23687	Small choke
21672	Output transformer
19465	Diaphragm
21260	Field Coil
28345	Cable and plug
15079	Plug

MODEL 810

31806	Volume control, .6 megohm
29429	Variable condenser assembly
29480	Range switch
29809	Selectivity switch
42820	Tone control switch
29101	Shaft and blade for above
29488	Shadow meter complete
30284	Front panel assembly
31221	Escutcheon
29475	Dial plate
29648	Lamp, 6.3-V., bayonet base
27254	Dial pointer
29567	Coil shield (T1, 3)
29568	Coil shield (T2, 4)
27255	Coil shield (T5, 6)
29619	I. F. T. shield (T7, 8, 9)
31138-C	Instruction folder, P-1283-C
49080	Shipping container

CHOKE

CH1	44760 Filter choke

TRIMMERS

28845	Double I. F. trimmer on T7 and T8
29825	Double I. F. trimmer on T6
44570	Double R. F. trimmer
28140	Oscillator trimmers (strip of four), A10, 11, 15 and 16
26770	A9, A12 (broadcast and police tracking)

ELECTROLYTICS

C28	29964 10 MF, 10 MF, 25-V.
C29	27588 16 MF, 500-V.
C30	29031 8 MF, 475-V.
C31	29031 8 MF, 475-V.
C35	28984 8 MF, 360-V.

RESISTORS

R21	21430 250 ohms, flexible
R25	49060 25 ohms, flexible
R26	46150 2 ohms, dial light resistor

SOCKETS

21557	Speaker socket
30058	Universal 8-prong socket

LINE PLUG AND FUSES

Late type Atwater Kent metal-tube sets use a double-fused 110 volt plug. The fuse rating depends on the current drain of the set. Always replace with a fuse of the original value. The part numbers of the plug and different fuses are given below:-

30065	Fuse type plug, less fuses
25156	Fuse, 1 amp.
28065	Fuse, 1½ amps.
18554	Fuse, 2 amps.
25774	Fuse, 5 amps.
21466	Fuse, 10 amps (auto sets)

BROWN MOLDED PUSH-ON KNOBS

28846	Knob (without dot)
28947	Knob (with dot)
28056	Knob (red and yellow dots)
28042	Knob (red, green, yellow dots)
28065	Knob spring

MODELS 856 AND 976

30047	Cabinet with screen (856)
29145	Gasket and screen (856)
29759	Escutcheon and crystal assem.
28961	Vol. control, .5 megohm
42750	Tone control switch
29101	Shaft and Blade for the above
29425	Var. cond. assem.
28986	Range switch
29185	I.F.T. shield
31648	Dial holder
31881	Dial plate (856)
31882	Dial plate (976)
45080	Pilot light socket assem.
29648	Lamp, 6.3-V., bayonet base (clear)
31006	Base cover (976)
31815	Grid cap with lead
31285	Instruction sheet, P-1298
48920	Shipping container (976)
48870	Shipping container (856)

TRANSFORMERS

T1	45060 No. 1 R.F.T.
T2	45070 No. 2 R.F.T.
T3	45080 Oscillator transformer
T4	45220 No. 1 I.F.T.
T5	45240 No. 2 I.F.T.
T6	21672 Output transformer
T7	46810 Power transformer (8-886)

RESISTORS

R2	46150 2 ohm, flexible
R19	18940 22 ohm, flexible
R20	46060 25 ohm, flexible

CONDENSERS

C1	29038 120 MMF., 450-V.
C2	28085 .006 MF., 450-V.
C4	28081 8 MF., 500-V.
C5	28080 800 MMF., 100-V.
C6	28808 25 MMF. 450-V.
C12	29552 120 MMF., 450-V.
C15	29552 120 MMF., 450-V.
C16	25579 10 MF., 25-V., electrolytic
C20	25250 .01 MF., 450-V.
C21	28081 8 MF., 475-V., electrolytic
C22	27585 8 MF., 360-V., electrolytic

In late sets, C22 is 16 MF., 500-V., No. 27585.

TRIMMERS

A4	28845 Top of chassis
A5	29480 Front of chassis
A6,7	29119 Double I.F. on T6
A8,9	29845 Double I.F. on T5

SOCKETS

21556	4-prong (speaker)
30060	Universal socket (8 prong)

CHOKES

CH1	41020 Wave trap assembly
CH2	25585 Small choke (976)
	23457 Small choke (856)

856 SPEAKER NO. 41900
976 SPEAKER NO. 41900

SPEAKER PARTS LIST FOR 1926-1928 MODELS

MODEL NUMBER	S'P'S PART NO. COMPLETE	FIELD COIL	DIAPHRAGM	OUTPUT TRANS.	SMALL CHOKE	CABLE & PLUG	PLUG
384, 387, 446, 545, 627, 725, 846	41900	21260	19465	21672	23687	28345	15079
late 328	44100	45270	29727	49810	25585	27611	15079
640	28580	45270	29727	21672	24325	22994	13582
810	40760	21260	29845	49760	.....	28467	13582

*The serial number of the change in speakers on Model 328 is approximately No. 6438760.

MODEL NUMBER	S'P'S PART NO. COMPLETE	FIELD COIL	DIAPHRAGM	OUTPUT TRANS.	SMALL CHOKE	CABLE & PLUG	PLUG
104	28820	21260	19465	21672	23687	28179	.....
320, 817, early 328; 435, 436, 576, 717, 976	41900	21260	29727	28117	28118	.....	15079
356	28604						

©John F. Rider

MODEL 710
Schematic

ATWATER KENT MFG. CO.

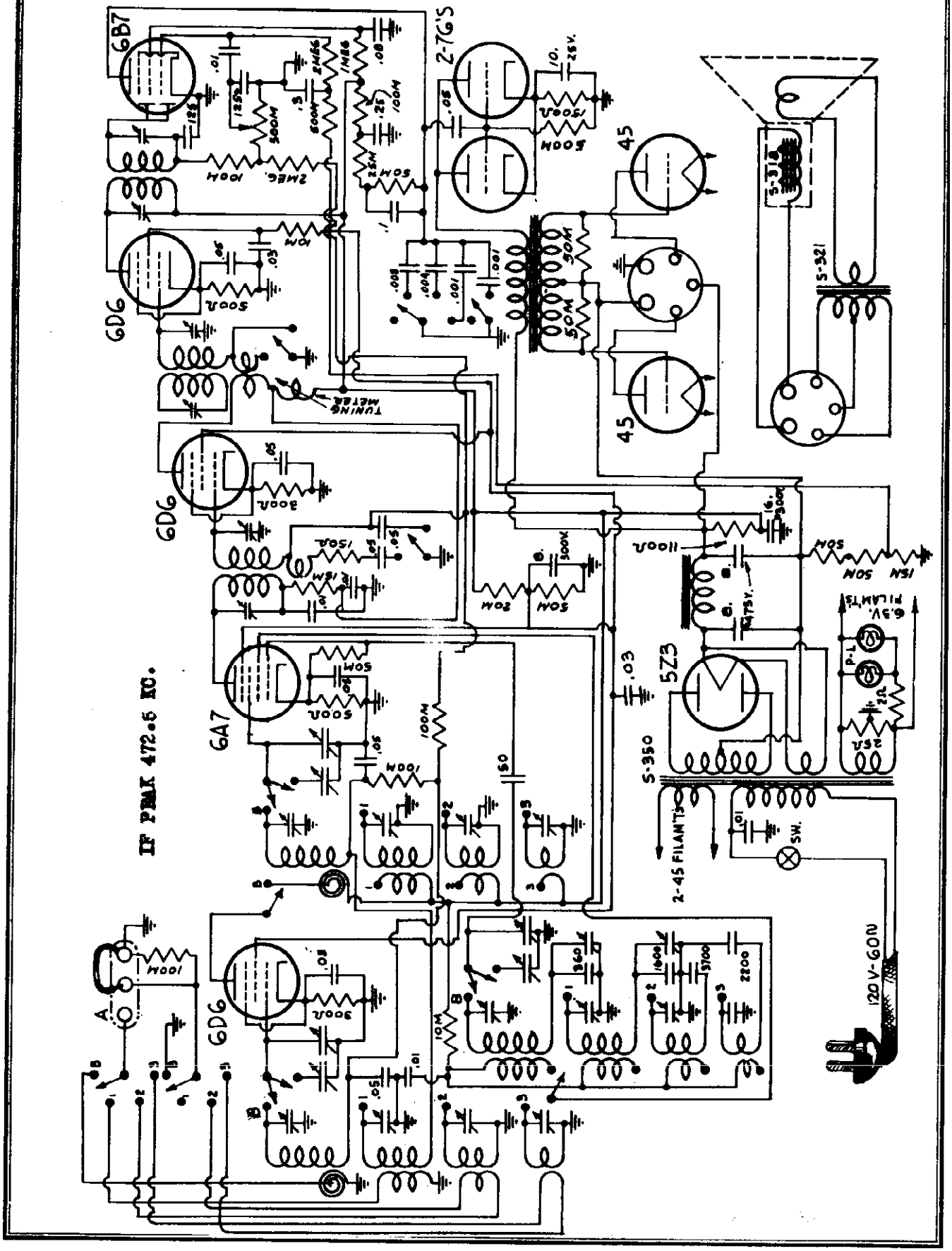

©John F. Rider

INSTRUCTIONS FOR INSTALLATION OF 32-VOLT D. C. RECEIVERS

The power unit may be placed at some distance from the set if desired. Under certain conditions this will be found an advantage in reducing hum and background noise.

ANTENNA

An outside antenna is best, and we suggest a single wire (continuous if possible) between 50 and 100 feet total length, including lead-in. The antenna should be as high as possible.

Run the antenna at right angles to the power line from the lighting plant to the house. Erect the antenna and lead-in away from the lighting plant.

The antenna lead-in must be short and direct, and it must be kept away from the ground and from the power line. Do not use a shielded lead-in.

Connect the antenna lead-in to the blue wire at rear of chassis.

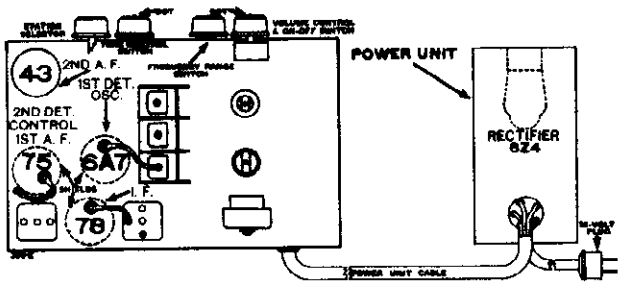

IMPORTANT

FOR MAXIMUM EFFICIENCY ON ALL WAVES, use the Atwater Kent Type "D" No. 28076 doublet antenna kit and the Atwater Kent Model "DT" No. 28083 doublet transformer. These parts have been designed especially for this receiver. Complete installation instructions are furnished with the kit.

The orange lead at rear of chassis is to be used only if the antenna is extra long. In this case, connect the orange lead (together with black lead) to ground. If the antenna is average length, do not use the orange lead and make certain that the end of this lead is covered with the rubber tubing.

GROUND

A ground is required and should be made by running a wire from the back lead at rear of chassis to the nearest water pipe or radiator, using a ground clamp to provide good contact to the pipe. Keep ground lead short.

LIGHTING PLANT INTERFERENCE

When the charging generator is running, a certain amount of electrical interference or noise may be picked up by the radio receiver. This originates in the ignition system of the lighting plant, and at the brushes of the lighting plant generator.

This interference can be eliminated by placing a spark-plug suppressor (No. 21143) on the engine-end of the lead from the high-tension coil. If this does not entirely correct the trouble, connect an Atwater Kent generator condenser No. 38270 from each brush of the generator to the generator frame.

Plants having more than one cylinder should have a suppressor on each spark plug and also a distributor-type suppressor (No. 21144) on the high-tension lead to the distributor cap.

Practically all ignition interference is eliminated by use of the suppressors and condensers as specified above. However, if there is still some electrical interference present after these parts have been correctly installed, in many cases this can be reduced and often entirely eliminated by employing one or more of the following methods:

(It is important to make all listening sets for ignition interference with the radio volume control full on, and with the lighting-plant generator in operation.)

1. Replace all leaky or old high-tension cables.

2. Make certain that all high-tension leads make good contact with their terminals. Soldered joints are preferable.

3. Reduce the gap between the rotor electrode and the distributor electrodes to a minimum by peening the rotor electrodes. If this is not feasible add solder to the end of the rotor electrode or to the distributor contacts.

4. Check the spacing of the spark-plug electrodes. in general, small gaps reduce interference.

5. Check the condition of the low-tension interrupter contacts. If necessary, file or replace the points.

6. Check for defective suppressors. The correct resistance is approximately 15,000 ohms.

7. Remove spark "boosters" on ignition coil or spark plugs.

AUTOCRAT RADIO CORP.

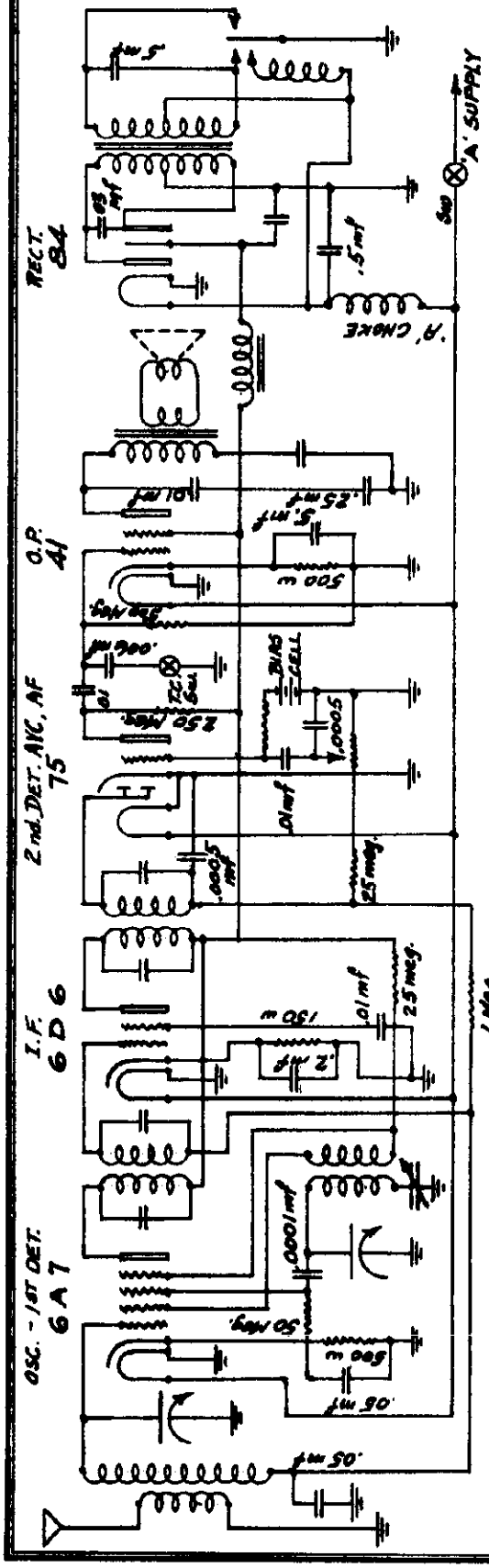

I.F. PEAK 456 KC.

505A	Variable Condenser
505B	Volume Control with sw.
505C	Tone control
505D	Speaker
505F	Electrolytic condenser
505F3	1st i-f. and osc. coil
505F4	2nd i-f. coil
505F6	Antenna coil
505H	Power Transformer
505J	Dial
505N	"B" Choke
505N1	"A" Choke
505V	Vibrator
505Y	Bias cell

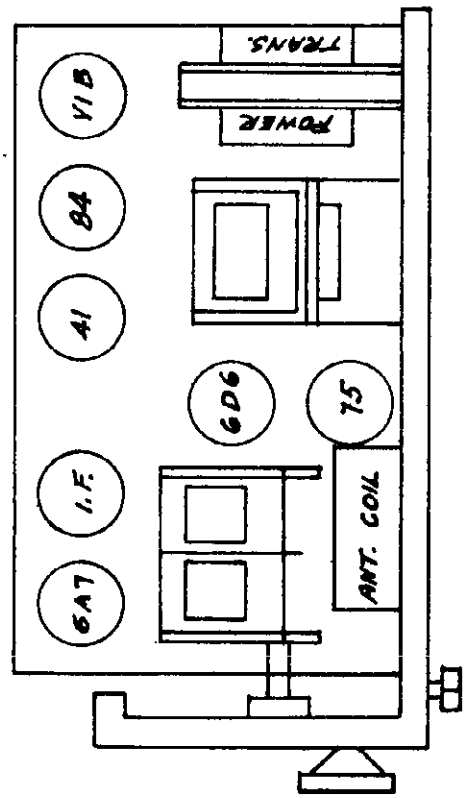

©John F. Rider, Publisher

MODELS 518,618
MODEL 406
Schematics, Socket

AUTOCRAT RADIO CORP.

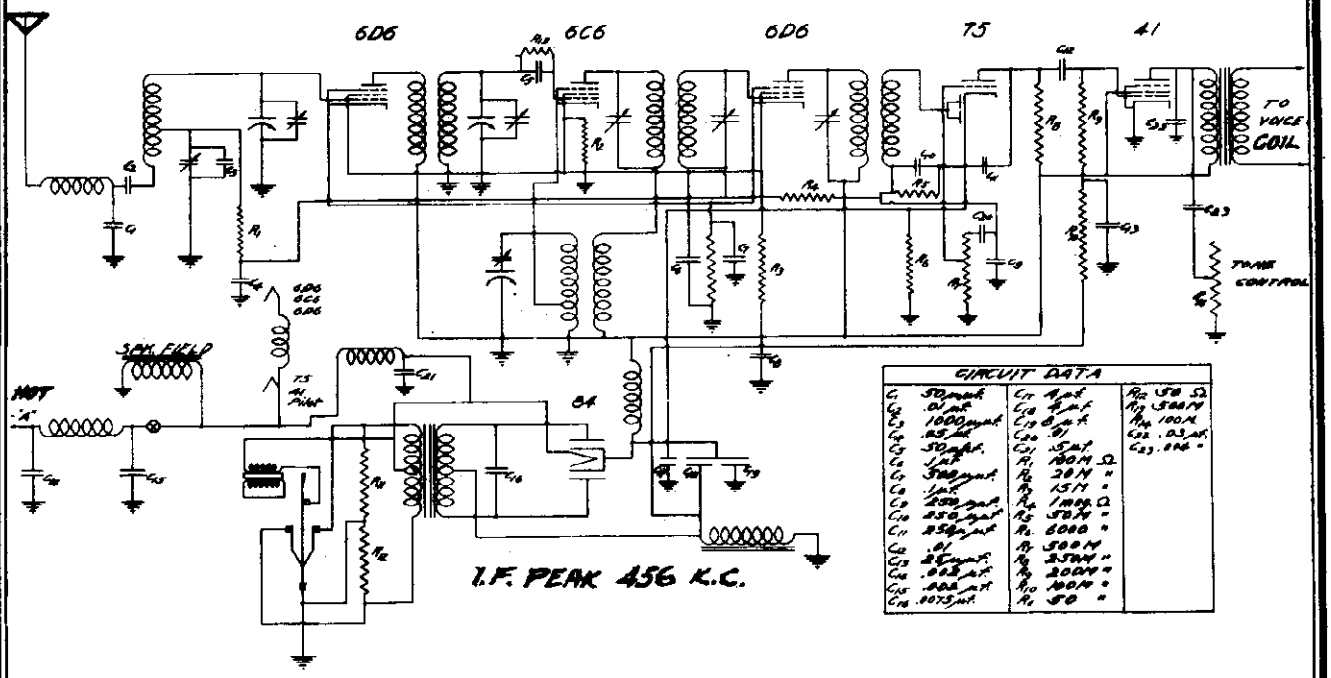

MODEL 518 is the same as Model 618, with 2-gang condenser.
Tubes: 6A7, 6D6, 75, 41, and 84

6 Tube Auto Radio
Model 618

MODEL 406

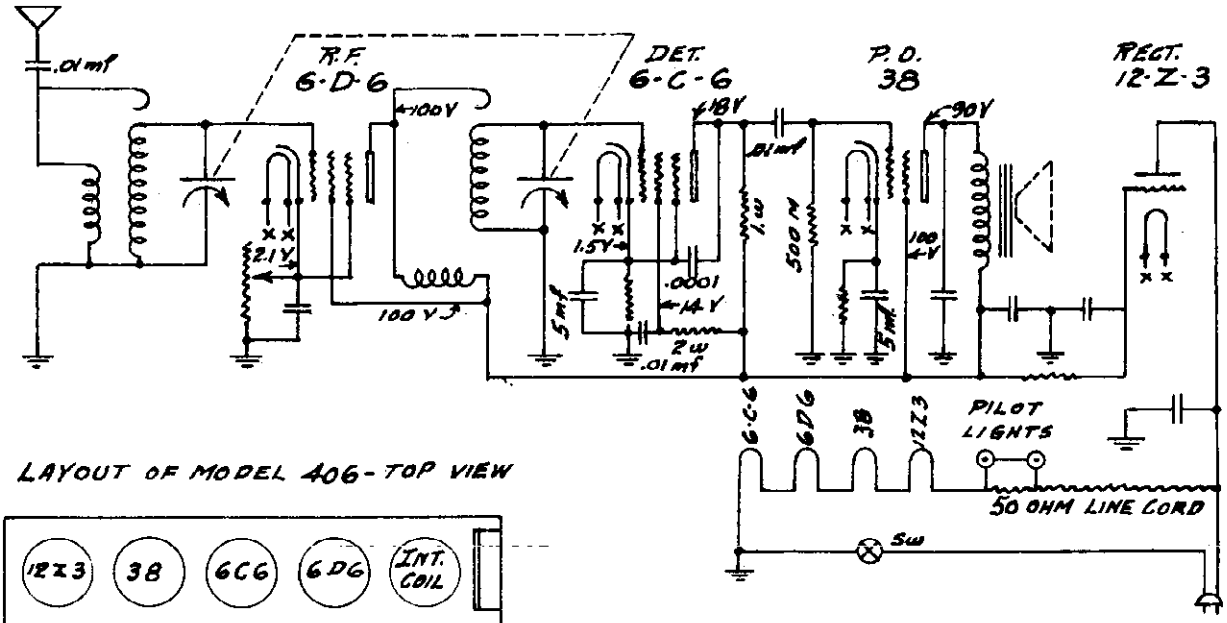

LAYOUT OF MODEL 406 - TOP VIEW

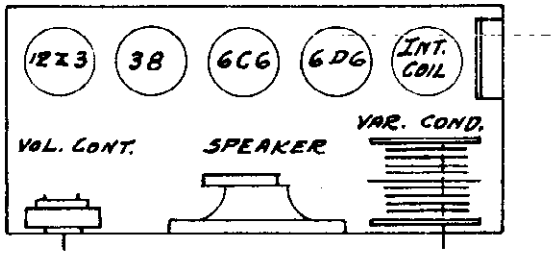

NOTE -
UNDER NO CIRCUMSTANCES SHOULD THE CHASSIS BE CONNECTED TO A GROUND, INASMUCH AS A GROUND IS UNNECESSARY.

AUTOMATIC RADIO MFG. CO., INC.

MODEL C-4
MODEL S-6
Schematics

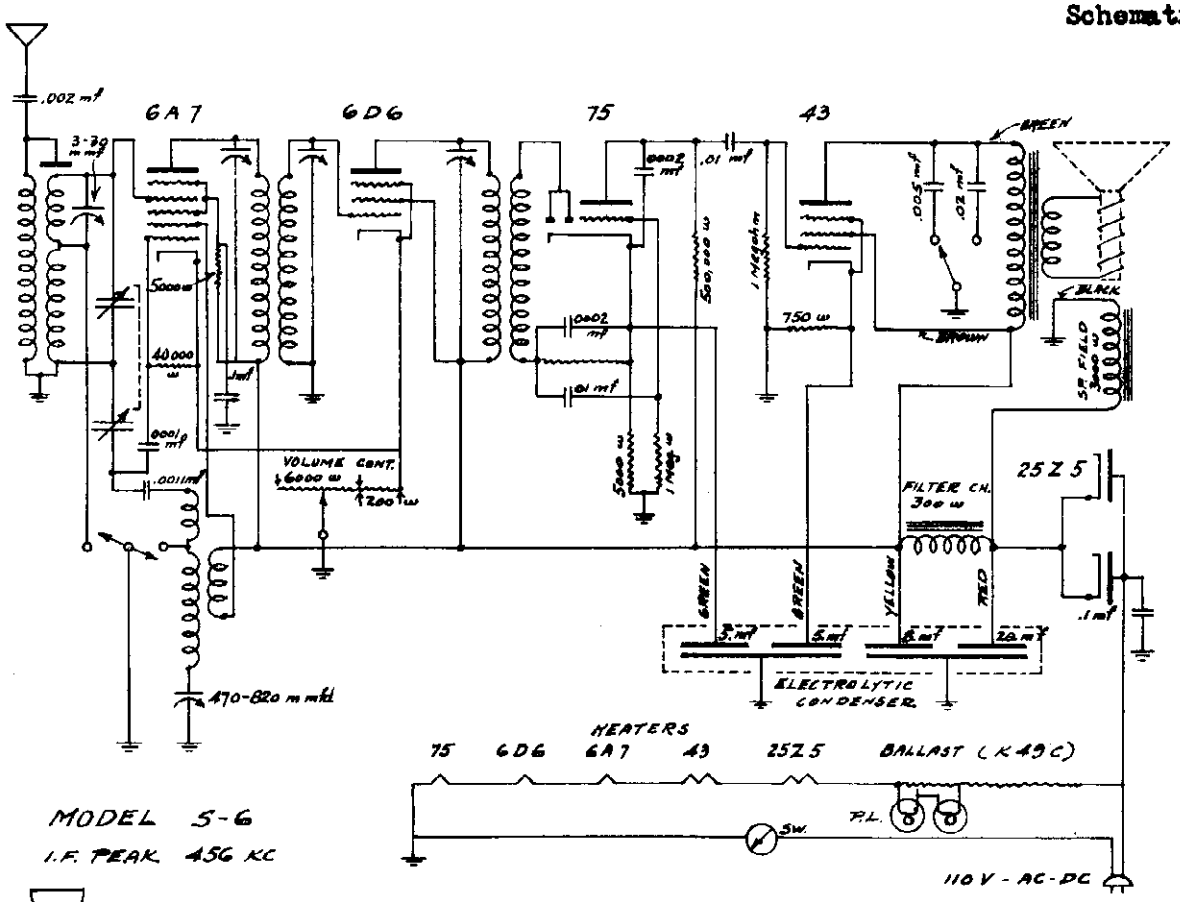

MODEL S-6
I.F. PEAK 456 KC

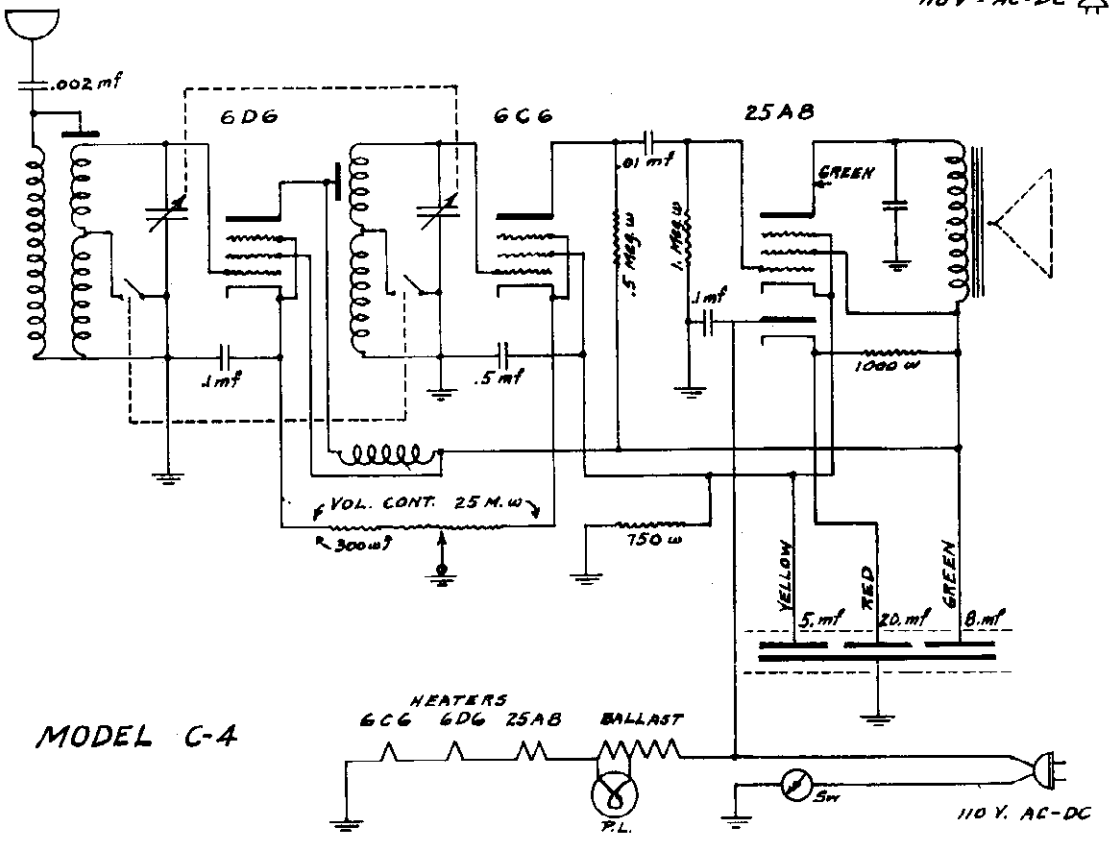

MODEL C-4

©John F. Rider

MODEL D-5
Schematic
Socket

AUTOMATIC RADIO MFG. CO., INC.

SCHEMATIC CIRCUIT
SERIES D5

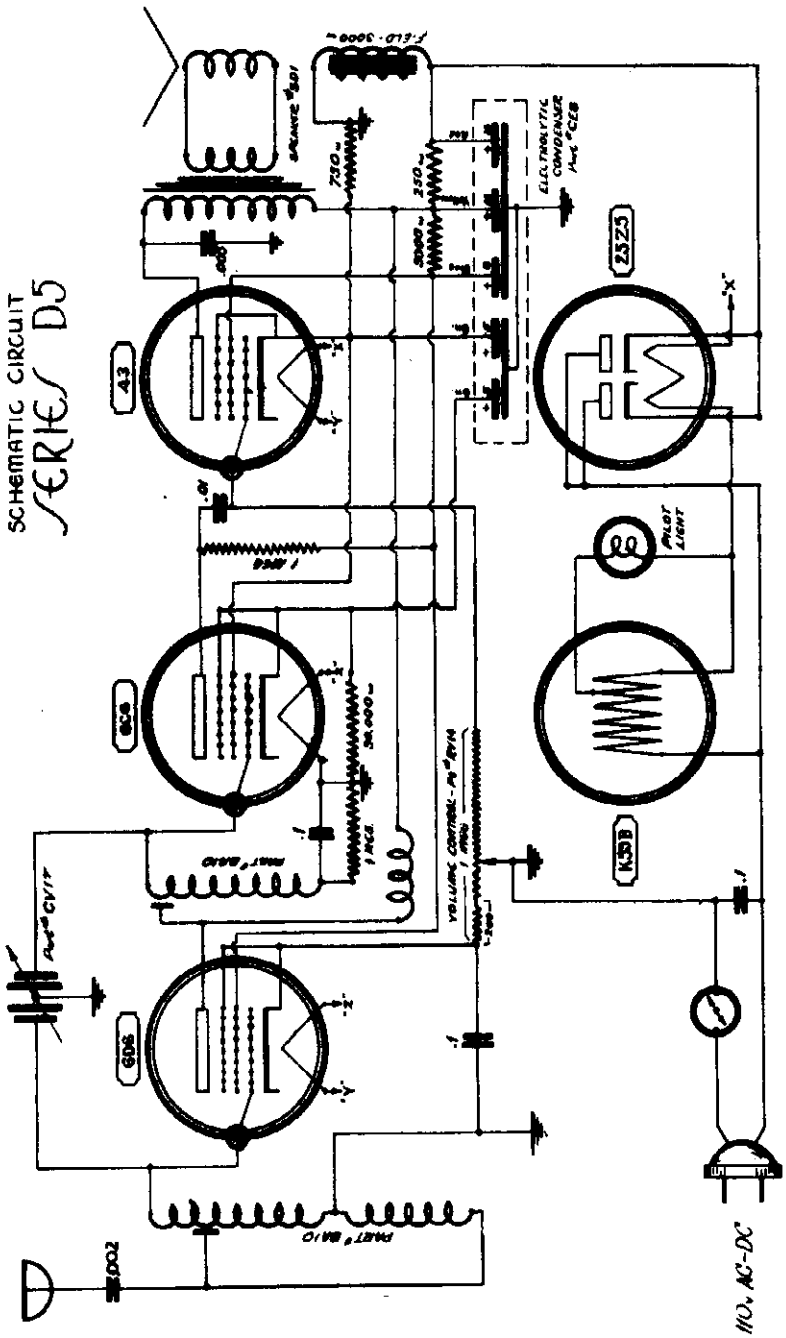

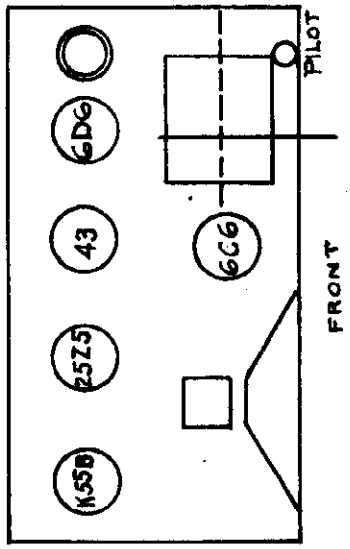

©John F. Rider, Publisher

AUTOMATIC RADIO MFG. CO., INC.

MODELS J-50, J-60, A-5
Schematic

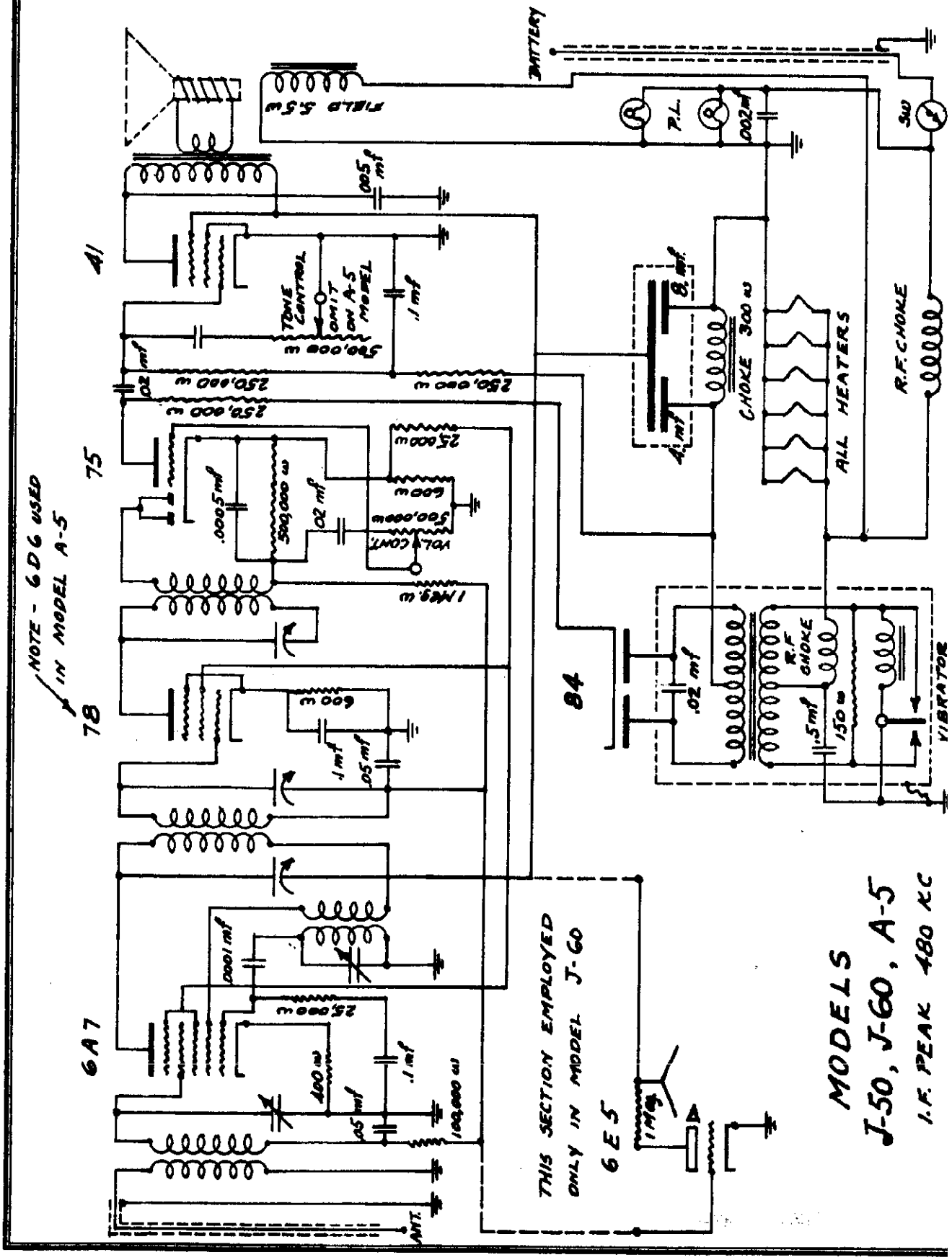

©John F. Rider, Publisher

MODEL J-80
Schematic, Parts
Alignment

AUTOMATIC RADIO MFG. CO., INC.

MODEL J-80 AUTO RADIO

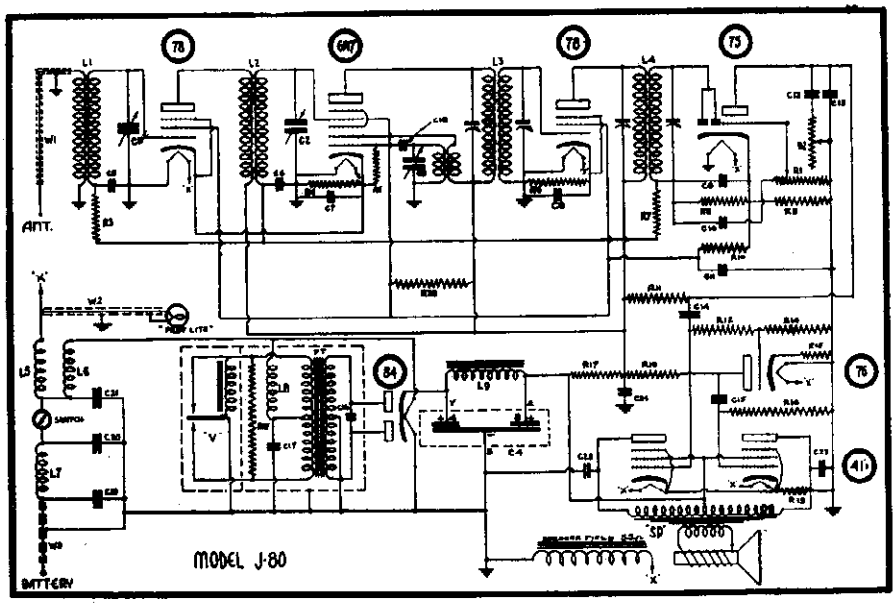

ALIGNMENT PROCEDURE

I. F. Alignment. Connect a signal generator set at 456kc to the 6A7 input and connect an output meter to the speaker output. Using a weak signal tune the two I. F. condensers on the composite coil and the two I. F. condensers on the output I. F. coil for maximum response.

Connect the signal generator set at 1400kc to the antenna lead using a dummy antenna of 150 mmf. Tune the set by means of the dial to 1400kc position. Adjust oscillator trimmer for this frequency. Then trim RF stage and antenna stage for maximum response. Repeating the alignment may result in improved sensitivity.

REPLACEMENT PARTS AND PRICE LIST

All orders for replacement parts must indicate both the Serial Number and Model Number of the Chassis in addition to the part number and description of the unit desired.

ASD14	SD	Speaker	$8.30
APT3	PT	Power Transformer	2.10
AF4	L9	"B" Filter Choke	.45
ACV15	C1–C2–C3	3 section Rotary Variable Condenser	2.50
AV2	V	Vibrator	2.50
ACE10	C4	Dual Electrolytic Condenser Block	1.45
ABA4	L1	Antenna Coil	.75
ABI4	L2	Interstage Coil	.75
AIO8	L3	Composite IF and Oscillator Coil	.90
AI3	L4	Output IF Coil	.90
ARV15	R2	Tone Control	.45
ARV16	R1	Volume Control and Switch	.65
AF5	L5–L6–L7–L8	R.F. Filter Choke	.15
RF151A	R19	Resistor 150 ohm ¼ Watt	.07
RF42C	R13	" 400 " 1 "	.15
RF62A	R4–R9	" 600 " ¼ "	.07
RF18A	R6–R17	" 1,000 " ¼ "	.07
RF53A	R15	" 5,000 " ¼ "	.07
RF24B	R20	" 20,000 " ⅛ "	.10
RF34A	R5	" 30,000 " ¼ "	.07
RF54A	R10	" 50,000 " ¼ "	.07
RF75BA	R14	" 75,000 " ¼ "	.07
RF15A	R11–R18	" 100,000 " ¼ "	.07
RF55A	R3–R8–R12–R16	" 500,000 " ¼ "	.07
RF16A	R7	" 1 Megohm ¼ "	.07
CF256	C12–C22–C23	Condenser .005 Mfd 600 volt	.12
CF121	C16	" .02 " 1000 "	.25
CF152	C10–C14–C15–C5–C6	" .05 " 200 "	.12
CF012	C7–C8–C11–C24	" .1 " 200 "	.12
CF052	C17–C21	" .5 " 200 "	.25
CF31M	C18	" .0001 " Mica	.10
CF35M	C9–C13	" .0005 " "	.10
CF22M	C19–C20	" .002 " "	.14
W1	W1	Shielded Antenna Cable	.25
W2	W2	Shielded Pilot Light Cable	.25
W3	W3	Shielded Battery Cable	.25
DXC4		Remote Control Cable	.70
DX4		Remote Control Head	2.25

Date Issued: May 15, 1936

©John F. Rider

BELMONT RADIO CORP.

MODEL 401, Series
Schematic, Socket
Voltage, Alignment
Parts List

MODEL 401B

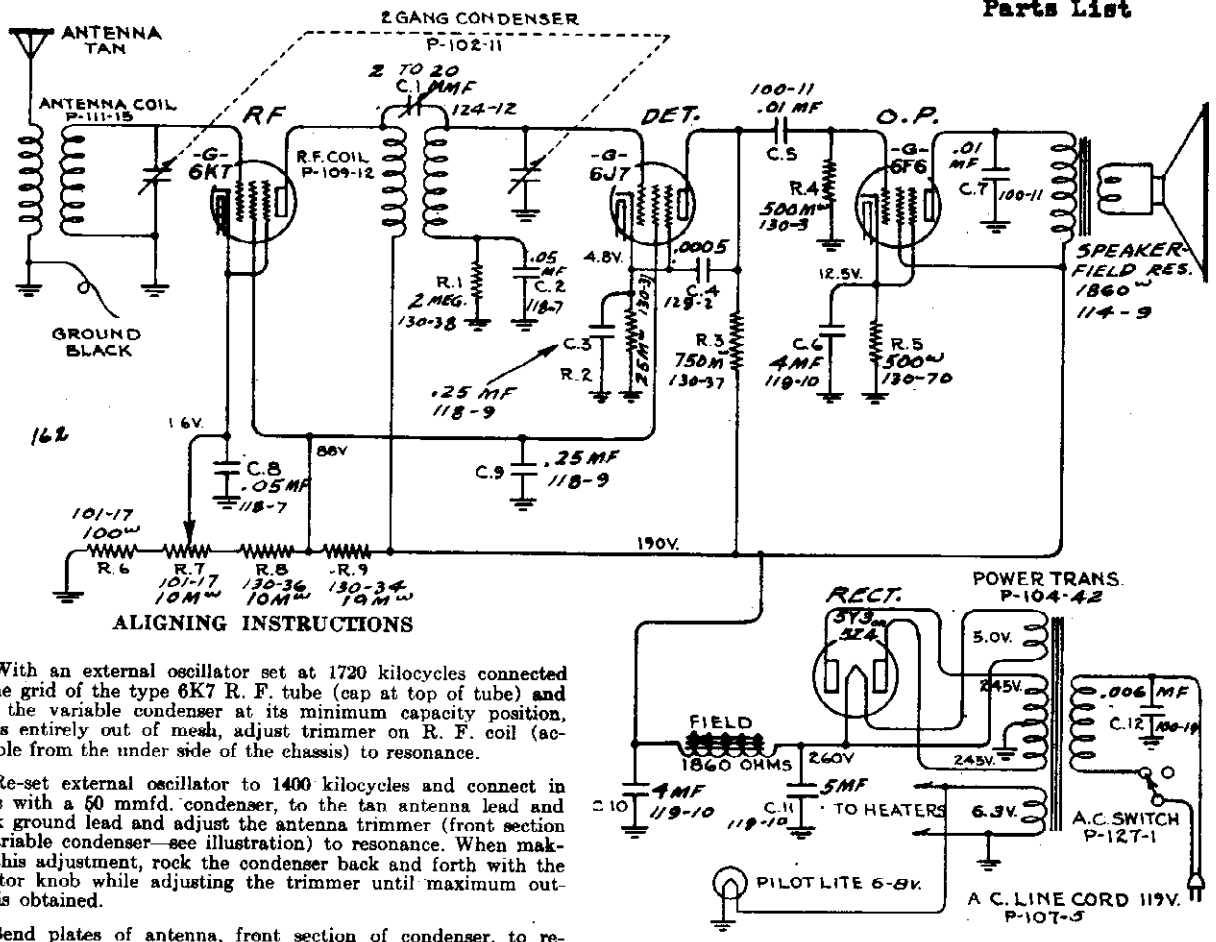

ALIGNING INSTRUCTIONS

1. With an external oscillator set at 1720 kilocycles connected to the grid of the type 6K7 R. F. tube (cap at top of tube) and with the variable condenser at its minimum capacity position, plates entirely out of mesh, adjust trimmer on R. F. coil (accessible from the under side of the chassis) to resonance.

2. Re-set external oscillator to 1400 kilocycles and connect in series with a 50 mmfd. condenser, to the tan antenna lead and black ground lead and adjust the antenna trimmer (front section of variable condenser—see illustration) to resonance. When making this adjustment, rock the condenser back and forth with the selector knob while adjusting the trimmer until maximum output is obtained.

3. Bend plates of antenna, front section of condenser, to resonance with external oscillator set at 1200, 1000, 800, 600 kilocycles. Output should be fairly uniform over the entire band, dropping off slightly at the higher frequencies.

Regular Transformer supplied is for 105-125 volts 60 cycle alternating current. For voltages in excess of 125, a special transformer or line resistor is required, also for 25 cycle current. Universal transformers are not available for this model.

Voltages taken from different points of circuit to chassis are measured with volume control full on, all tubes in their sockets and speaker connected, with a volt meter having a resistance of 1000 ohms per volt. These voltages are clearly indicated on the circuit diagram.

All voltages are to be measured with 119 volts on the primary of the power transformer.

To check for open by-pass condensers, shunt each condenser with another condenser of the same capacity and voltage rating, which is known to be good, until the defective unit is located.

Excessive hum, stuttering, low volume and a reduction in all D.C. voltages is usually caused by a shorted electrolytic condenser, open by-pass condensers frequently cause oscillation and distorted tone.

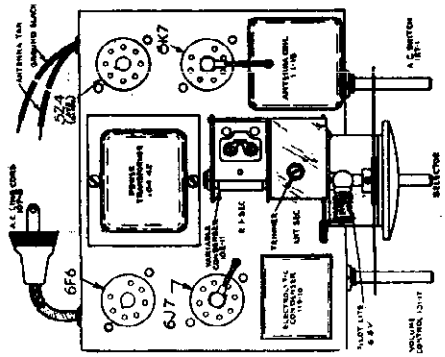

PARTS LIST
MODEL 401—SERIES B

When ordering parts, always specify part and model number as well as serial number of chassis.

Part No.	Description	List Price
101-17	Volume Control—Less Switch	$1.00 ea.
102-11	Two Gang Variable Condenser	2.50 ea.
104-12	Power Transformer	2.50 ea.
107-6	Line Cord and Plug	.50 ea.
109-12	R.F. Coil Complete	1.25 ea.
111-15	Antenna Coil Complete	1.00 ea.
112-9	Dial Bracket Drive Complete	.65 ea.
112-15	Dial Crystal	.12 ea.
112-16	Pointer	.12 ea.
112-19	Drive Disc Assembly Complete	.40 ea.
112-37	Bakelite Escutcheon	.50 ea.
112-59	Dial Scale	.20 ea.
112-61	Pilot Light Clip	.10 ea.
	Unless Otherwise Listed, All Single Section Tubular Paper By-Pass Condensers	.25 ea.
114-9	Five Inch Speaker	4.00 ea.
115-15	Shield Can	.12 ea.
115-22	Tube Shield	.15 ea.
115-26	Gang Condenser Shield	.10 ea.
116-1	2.5 Volt Pilot Light	.10 ea.
119-10	Electrolytic Condenser	2.00 ea.
127-1	Line Switch	.35 ea.
131-2	Bakelite Knob	.15 ea.
	All Carbon Resistors	.20 ea.
	All Sockets	.20 ea.
	Midget Cabinet	5.00 ea.
	Unless Otherwise Listed, All Molded Mica Condensers	.25 ea.
	Unless Otherwise Listed, All Dual Section Tubular Paper By-Pass Condensers	.50 ea.
112-66	Bakelite Glass Retain'g Escutcheon with Glass	.60 ea.

MODEL 522
Schematic, Voltage
Socket, Trimmers
Alignment, Parts

BELMONT RADIO CORP.

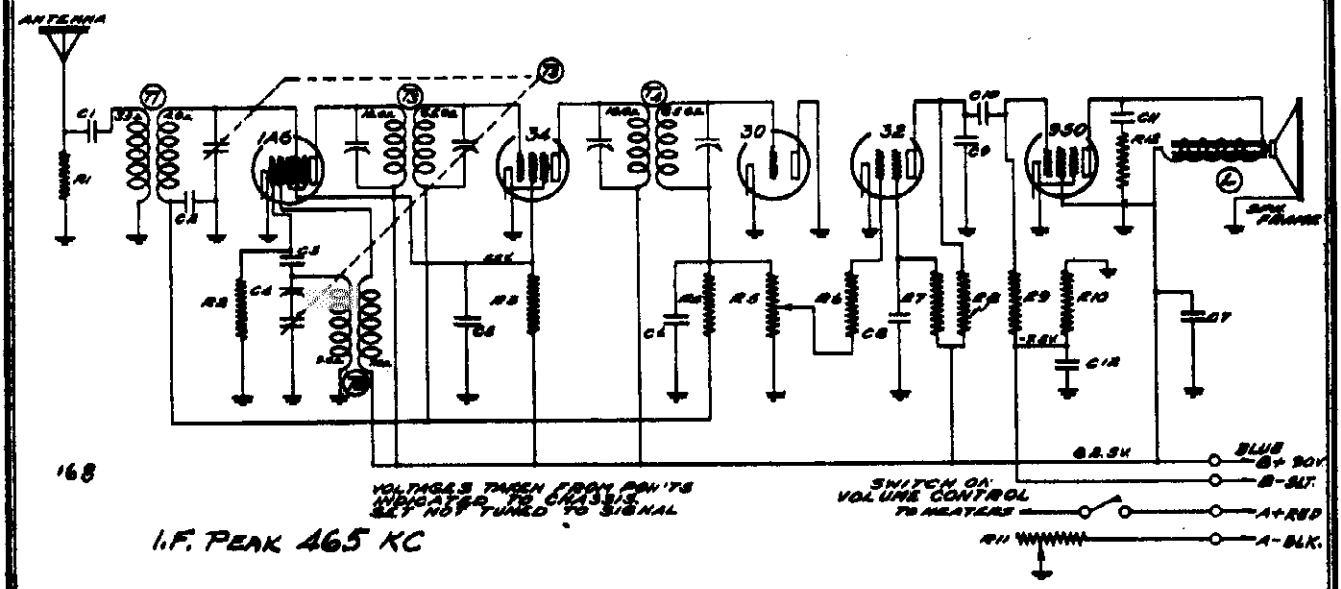

No.	Part No.	Description
		RESISTORS
R1	130-17	10M Ohm - ½ Watt - 20% - 20 Volt - Carbon
R2	130-52	50M Ohm - ½ Watt - 20% - 10 Volt - Carbon
R3	130-17	10M Ohm - ½ Watt - 20% - 20 Volt - Carbon
R4	130-38	2 Meg Ohm - ½ Watt - 20% 100 Volt - Carbon
R5	101-43	1 Meg Ohm Volume Control and Switch
R6	130-52	50M Ohm - ½ Watt - 20% 10 Volt - Carbon
R7	130-19	1 Meg Ohm - ½ Watt - 20% 100 Volt - Carbon
R8	130-9	200M Ohm - ½ Watt - 20% - 20 Volt - Carbon
R9	130-19	1 Meg Ohm - ½ Watt - 20% 100 Volt - Carbon
R10	130-98	450 Ohm - ½ Watt - 10% 10 Volt - Carbon
R11	101-44	4.75 Ohms - Rheostat
R12	130-52	50M Ohm - ½ Watt - 20% 10 Volt - Carbon
		CONDENSERS
C1	100-11	.01 x 400 Volt - 25%
C2	100-22	.05 x 200 Volt - 25%
C3	129-12	.00025 Mica - MT - 20%
C4	124-14	Series Pad
C5	100-9	.05 x 200 Volt - 25%
C6	129-5	.0001 Mica - MT - 20%
C7	100-6	.25 x 200 Volt
C8	100-9	.05 x 200 Volt - 25%
C9	129-3	.0005 Mica - MT - 20%
C10	100-11	.01 x 400 Volt - 25%
C11	100-11	.01 x 400 Volt - 25%
C12	119-22	10.0 Mfd. x 25 Volts - Working Voltage
		PARTS
T1	111-46	Antenna Coil
T2	110-36	Oscillator Coil
T3	108-67	Input I.F. Coil 465 K.C.
T4	108-68	Output I.F. Coil 465 K.C.
T5	102-29	Two Gang Condenser
L	114-19	Six Inch Magnetic Speaker

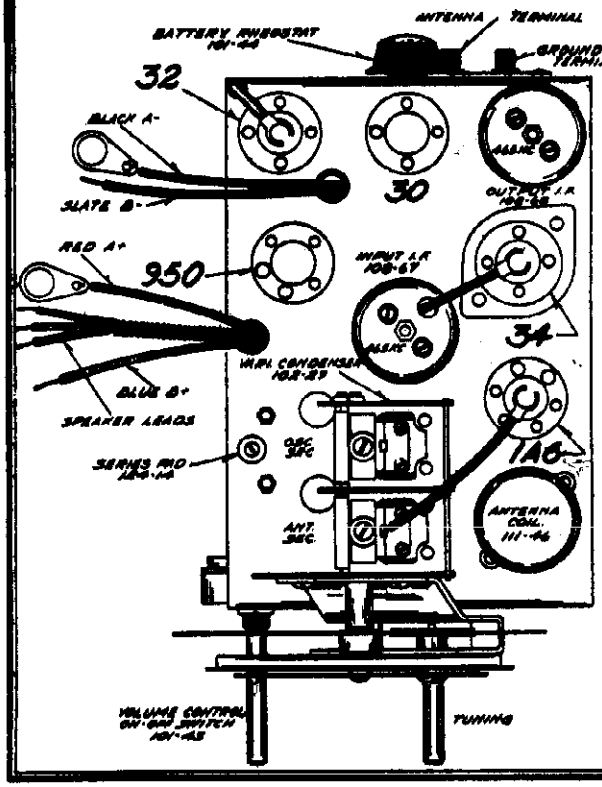

ALIGNING I.F. TRANSFORMERS: (465 K.C.)

1. With volume control full on and with variable condenser at its minimum capacity position, plates entirely out of mesh, and with external oscillator set at 465 K.C. connected in series with a .1 mfd. condenser, to the grid of the 1A6 tube (cap at top of tube), adjust I.F. transformers, parts number 108-67 and 108-68, to resonance. Both of these transformers have two (2) adjustments each, they are accessible from the tops of the cans (for location see top view).

Use as a resonance indicator an output meter connected across the outside terminals of the speaker or by means of an adapter to the plate and screen of the type 950 output tube. Maximum deflection of the volt meter indicates resonance.

Use only enough signal to get a readily readable output.

A low range output meter or the low scale of a multi-range meter should be used.

BROADCAST BAND ALIGNMENT:

1. Set external oscillator to 1720 K.C. and connect it in series with a 200 mmfd. condenser to the antenna and ground posts.
   (a) With variable condenser in its minimum capacity position, plates entirely out of mesh, adjust oscillator trimmer (rear section of variable condenser) to resonance.
   (b) Re-set external oscillator to 1400 K.C. Rotate variable condenser, pick up signal and adjust antenna trimmer (front section of variable condenser) to resonance.
   (c) Re-set external oscillator to 600 K.C., move dial pointer to 600 K.C., and adjust series pad, part number 124-14 (see top view), to resonance. While making this adjustment, slowly rock variable condenser to and fro until maximum output is obtained.
   (d) Check for sensitivity at 1400, 1000, 600 K.C. DO NOT BEND PLATES.

©John F. Rider, Publisher

©John F. Rider, Publisher

BELMONT RADIO CORP.

MODEL 556 (Export)
Schematic, Socket
Trimmers

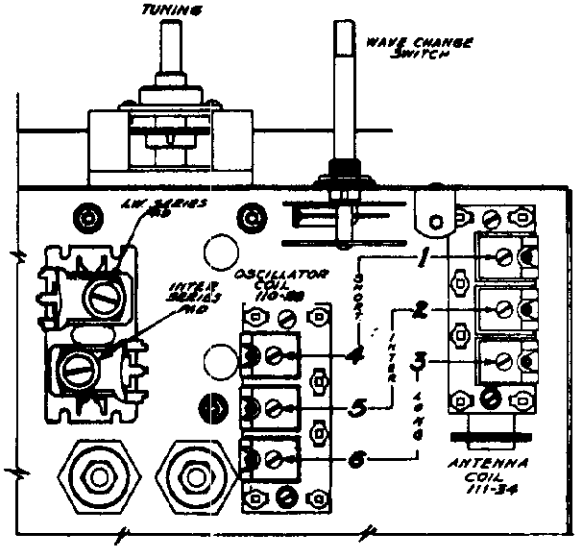

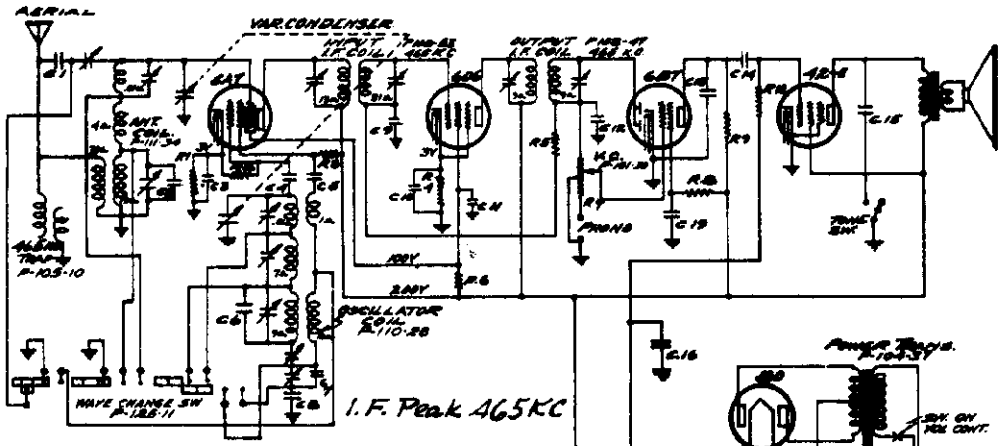

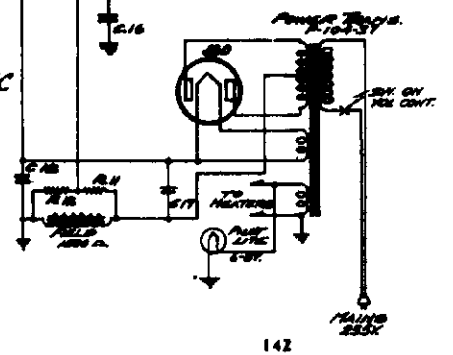

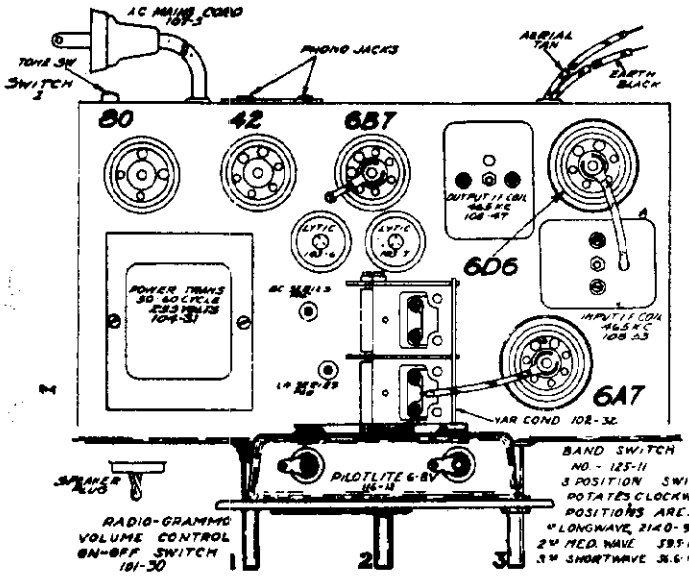

RESISTORS

R.1—250 ohm
R.2—50M ohm ½ w
R.3—15M ohm ½ w
R.4—350 ohm
R.5—500M ohm ½ w
R.6—19M ohm 1w
R.7—1 meg vol. cont.
R.8—1 meg ½ w
R.9—250M ohm ½ w
R.10—500M ohm ½ w
R.11—800M ohm ½ w
R.12—201M ohm ½ w
C.1—20 mmf mica
C.2—35 mmf mica
C.3—.1x200v

CONDENSERS

C.4—100 mmf mica
C.5—2M mmf mica
C.6—155 mmf mica
C.7—275 mmf mica
C.8—3800 mmf mica
C.9—.1x200v
C.10—.1x200v
C.11—.1x200v
C.12—250 mmf mica
C.13—250 mmf mica
C.14—.02x400v
C.15—.025x400v
C.16—.1x200v
C.17—8.0x350v P-103-6
C.18—8.0x300v P-103-7
C.19—.1x200v

NOTE:

C.9 & C.11 in one unit P-118-1
C.10 & C.19 in one unit P-118-1
Voltages taken from points indicated to chassis ground
Vol. control on full.
Numbers prefixed by letter "P" are part Nos.

Model 556

THIS MODEL IS FOR EXPORT.

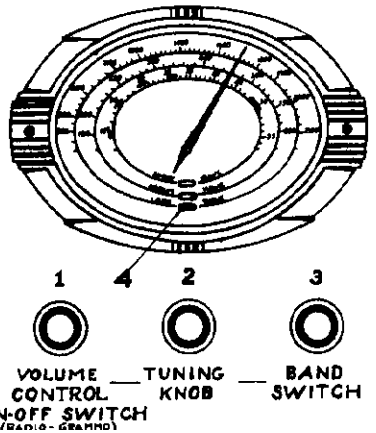

MODEL 556 (Export)
Alignment,Parts

BELMONT RADIO CORP.

Belmont Model 556 5-Tube A. C. 3-Band Superheterodyne Receiver

200-260 Volts 50-60 Cycles Alternating Current

(THIS MODEL IS FOR EXPORT ONLY)

DESCRIPTION

Tubes:

The Tube complement of this chassis is as follows:

1 Type 6A7—pentagrid converter.

1 Type 6D6—remote cut-off pentode as I.F. amplifier.

1 Type 6B7—duplex diode pentode as diode detector, A.V.C. and A.F.

1 Type 42E—pentode output tube.

1 Type 80—high vacuum rectifier.

Voltages taken from different points of circuit to chassis are measured with volume control full on, all tubes in their sockets and speaker connected, with a voltmeter having a resistance of 1000 ohms per volt. These voltages are clearly indicated on circuit diagram.

All voltages are measured with 235 volts 50-100 cycles on the primary of the power transformer.

Resistance of coils and transformer windings are indicated in ohms on schematic circuit diagram.

Transformers are available and chassis are sometimes equipped with universal transformers for operation on 40 and 60 cycles and with primary taps for 105, 125, 150, 220 and 250 volts (see illustrations) and also sometimes equipped with 25 cycle transformers with 105-115 volt or 235 volt primaries, not universals.

Should the receiver be equipped with a special transformer, connect primary tap on voltage terminal which corresponds as nearly as possible to the actual line voltage. If an exact agreement cannot be secured, suitable allowances of other measured voltages must be made.

ALIGNING INSTRUCTIONS—SERIES A

Description of various dummy antennas used and referred to in these instructions:

(1) I.F. Dummy—Consists of a .1 mfd. condenser connected in series with the external oscillator.

(2) Broadcast Dummy—Consists of a 200 mmfd. condenser and a 20 ohm resistor connected in series with each other and in series with the external oscillator.

(3) Intermediate and Short Wave Dummy—Consists of a .1 mfd. condenser and a 400 ohm resistor connected in series with each other and in series with the external oscillator.

Resonance Indicator:

Use as a resonance indicator an output meter connected across the primary of the speaker input transformer, or by means of an adapter between the plate and screen terminals of the type 42E output tube. Maximum deflection of the meter indicates resonance. Use only enough signal to get a readily readable output. A low range output meter or the low scale of a multi-range volt meter should be used.

TEST FREQUENCIES

	Wave Length Meters	Frequency Kilocycles
Long Wave	2000	150
	922	325
I.F.	645.1	465
Broadcast	500	600
	300	1000
	214.2	1400
Short Wave	50.0	6000
	16.7	18000

ALIGNMENT:

No aligning adjustments should be attempted without first thoroughly checking over all other possible causes of trouble, such as poor installations, open or grounded antenna systems, low line voltages, defective tubes, condensers and resistors. In order to properly align this chassis, an oscillator (generator) is absolutely necessary. No aligning adjustments should be attempted with the chassis in the cabinet. To remove the knobs, pull them off and to take the chassis out of the cabinet, remov the three bolts by which it is fastened and the speaker plug which you will find on the front flange of the chassis panel.

ALIGNING I. F. TRANSFORMERS:

1. With volume control full on, the extreme right of its rotation, and with wave changing switch in the broadcast position, center of its rotation, and with variable condenser at its minimum capacity position, plates entirely out of mesh, adjust the I.F. transformers (two adjustments at the top of parts number 108-47 and 108-53—see top view)

(a) Connect external oscillator which has been adjusted to 645.1 meters in series with I.F. dummy antenna, to the control grid cap of the type 6D6 tube and chassis ground. Adjust output I.F. transformer, part number 108-47, to resonance.

(b) Move generator output clip from grid of 6D6 to grid cap of 6A7 tube and align input I.F. transformer, part number 108-53.

(c) With generator connected to grid of type 6A7 tube, readjust output I.F. transformer, part number 108-47, to resonance.

BROADCAST BAND ALIGNMENT:

(188-595 meters)

1. With wave changing switch in the broadcast position, center of its rotation, and with gang condenser in its minimum capacity position, plates entirely out of mesh, connect an external oscillator in series with broadcast dummy antenna to tan antenna and black ground leads and make the following adjustments:

(a) With external oscillator set at 187.5 meters, adjust oscillator trimmer to resonance, for location of this adjustment, number 5, see diagram.

(b) Re-set external oscillator to 214.2 meters, rotate condenser, pick up oscillator signal and adjust antenna trimmer to resonance. For location of this adjustment, number 2, see diagram.

(c) Re-set external oscillator to 500 meters and adjust series pad to resonance, rotate condenser and move dial pointer to 500 meters by gently rocking condenser to and fro. Pick up oscillator signal while adjusting series pad to resonance, maximum deflection on an output meter. This adjustment is accessible from the top of the chassis and is located between variable condenser and power transformer, rear hole see top view—part number 124-19.

(d) Check for tracking and sensitivity at 300 meters.

SHORT WAVE BAND ALIGNMENT:

(16.5-56.6 meters)

1. Set wave changing switch to short wave position, extreme right of its rotation, set dial pointer to 16.7 meters.

(a) With external oscillator adjusted to 16.7 meters and connected in series with short wave dummy antenna to tan antenna and black ground leads, adjust the oscillator short wave trimmer until generator signal is picked up. For location of this adjustment, number 4; see diagram.

(b) Adjust short wave antenna trimmer to resonance. For location of this adjustment, number 1, see diagram.

(c) Re-set external oscillator to 50 meters, rotate condenser, move dial pointer to 50 meters, and check for tracking and sensitivity. Do not bend plates. Note: It is extremely necessary in making all of the above adjustments that the fundamental signal of the oscillator be tuned in and not the image frequency, which will fall at a higher wave length.

LONG WAVE BAND ALIGNMENT:

(925-2140 Meters)

1. With wave changing switch in long wave position (extreme left of its rotation) and with variable condenser in its minimum capacity position (plates entirely out of mesh), make the following adjustments:

(a) With external oscillator set at 922 meters and connected in series with "Dummy 2" to the tan antenna lead, adjust rear trimmer of oscillator coil (adjustment No. 6, see diagram) until oscillator signal is picked up.

(b) Adjust rear trimmer of antenna coil to resonance with oscillator (adjustment No. 3, see diagram).

(c) Re-set external oscillator to 2000 meters and rotate variable condenser (move pointer) and pick up oscillator signal, adjust L.W. pad (front adjustment accessible from top of chassis and located between variable condenser and power transformer) to resonance. While making this adjustment, slowly rock variable condenser to and fro until maximum output is obtained.

SERVICE NOTES:

To check for open by-pass condensers, shunt each condenser with another of similar capacity and of the same voltage rating, which is known to be good, until the defective unit is located. Open bypass condensers frequently cause oscillation and distorted tone. Defective and shorted electrolytic filter condensers cause excessive hum, motor-boating, low volume and a reduction in all D.C. voltages. Open or shorted electrolytic and by-pass condensers (across bias resistor of type 42E tube) will cause low volume and distorted tone.

Should the planetary vernier dial drive mechanism fail to function properly, it will probably be found to be due to a cracked or broken compression spring. The drive may be disassembled to replace the compression spring (part number 112-31) by removing the two screws which fasten it to the dial bracket. Before reassembling all parts should be carefully cleaned and a small amount of vaseline applied to the ball bearings. All other dial parts are hardened and should cause no trouble.

Tuning Range

16.5 — 56.6 meters
188 — 595 meters
925 — 2140 meters

REPAIR PARTS LIST

Part No.	DESCRIPTION
	CONDENSERS
100-19	.006 x 600 Volt Tubular
100-20	.1 x 200 Volt Tubular
100-26	.02 x 400 Volt Tubular
100-27	.025 x 400 Volt Tubular
102-6	8 Mfd. x 350 Volt Electrolytic
102-7	8 Mfd. x 300 Volt Electrolytic
110-1	.1 - .1 x 200 Volt Dual Tubular
120-3	.00005 Mica—Type MT—20%
120-4	.0001 Mica—Type MT—20%
120-6	.002 Mica—Type MW—20%
120-12	.00025 Mica—Type MT—20%
120-20	.0020 Mica—Type MW—2½%
120-33	.000075 Mica—Type MT—5%
120-34	.000005 Mica—Type MT—10%
120-46	.000155 Mica—Type MT—5%
	RESISTORS
130-3	500M Ohm—½ Watt—50 Volt—20% Carbon
130-6	201M Ohm—½ Watt—50 Volt—10% Carbon
130-11	250M Ohm—½ Watt—50 Volt—20% Carbon
130-16	1Meg Ohm—½ Watt—50 Volt—20% Carbon
130-[illegible]	250 Ohm—½ Watt—10 Volt—20% Wire Wound
130-34	15M Ohm—1 Watt—100 Volt—20% Carbon
130-60	500M Ohm—½ Watt—50 Volt—10% Carbon
130-68	50M Ohm—½ Watt—50 Volt—20% Carbon
130-73	15M Ohm—½ Watt—50 Volt—20% Carbon
130-74	550 Ohm—½ Watt—10 Volt—20% Wire Wound
	COILS
108-10	Wave Trap Coil Complete
108-47	Output I.F. Transformer Complete with Can
108-53	Input I.F. Transformer Complete with Can
110-20	Oscillator Coil Complete
111-34	Antenna Coil Complete
	TRANSFORMERS
104-31	50/60 Cycle—235 Volt Primary
104-37	40 Cycle—235 Volt Primary
104-38	25 Cycle—235 Volt Primary
104-39	Universal—40 Cycle Primary
104-40	Universal—25 Cycle Primary
	SPEAKER
114-15	Six Inch Dynamic Speaker
	MISCELLANEOUS
101-30	Volume Control and Switch
102-22	Two Gang Variable Condenser
107-5	Line Cord & Plug
Part No.	Description
115-36	Tube Shield
124-19	J-4-4D Dual Padder
125-11	Band Switch
143-1	Tone Switch
171-2	Phono-jack Assembly
128-15	Wood Knob (with Spring) (1)
128-41	Wood Knob (Set Screw) (3)

DIAL PARTS LIST

ASSEMBLIES

117-41	Drive Bracket including: 1—No. 117-19—Tuning Shaft Bushing
117-40	Switch Disc and Link Assembly, including: 1—No. 117-12—Switch Arm; 1—No. 117-35—Bushing with Screws; 1—No. 117-40B—Switch Link; 3—No. 151-36—Spring Washers; 3—No. 162-5—Rivets; 1—No. 112-144—Switch Disc—Inc. Red Tape

DIAL PARTS ONLY

112-135	Drive Belt
112-148	Oval Escutcheon complete with Celluloid Crystal
112-166	Dial Scale complete
112-147	Tuning Shaft
112-151	Pointer complete with Screw
112-155	Pilot Light Assembly
116-13	6.3 Volt T-51 Pilot Light
117-28A	Tuning Shaft Pulley
117-38	Stud, for take-up Spring
117-39	Pulley, for take-up Spring
120-14	Take-up Spring
124-9	Horse Shoe Washer
124-40	Rubber Grommet

All resistors and mica condensers are RMA color coded—specify value and/or resistor or condenser (per schematic diagram) and model number.

Mica condensers are coded with an additional dot indicating tolerance:

Tolerance Percent	Color of Dot
2½%	White
5%	Green
10%	Blue
15%	Yellow
20%	Red
More than 20%	None

When ordering condensers, specify part number, model and/or capacitor (per schematic diagram) and model number.

When ordering parts, always specify part and model number as well as serial number of chassis.

WHEN ORDERING SPEAKER PARTS: CONES, FIELD COILS, OUTPUT TRANSFORMERS, SPECIFY PART NUMBER OF SPEAKER AND MAKE.

©John F. Rider

BELMONT RADIO CORP.

MODEL 566
Schematic, Socket
Trimmers, Parts

©John F. Rider

CONDENSERS

C1	129-3	.00002 Mica—"0"—20%
C2	129-49	.00009 Mica—"0"—5%
C3	100-9	.05x200 Volt
C4	100-6	.25x200 Volt
C5	129-21	.0002 Mica—"MT"—"0"—20%
C6	100-1	.1 x400 Volt 50%—10%
C7	100-33	.1 x200 Volt 50%—10%
C8	100-9	.05x200 Volt 25%—25%
C9	100-1-B	.1 x400 Volt 50%—10%
C10	129-12	.00025 Mica—"MT"—"0"—20%
C11	100-9	.05 x200 Volt 25%—25%
C12	129-5	.0001 Mica—"MT"—"0"—20%
C13	116-15	.05 x400 Volt
C14	116-15	.007x860 Volt
C15	100-33	.1x200 Volt 50%—10%
C16	119-20	8.0 Mfd. Electrolytic Condenser—350 Working Volts
C17	119-20	4.0 Mfd. Electrolytic Condenser—350 Working Volts
C18	100-36	.01x1400 Volt—10%
C19	100-35	.5 x 200 Volt 50%—10%
C20	100-35	.5 x 200 Volt 50%—10%
C21	100-33	.1 x 200 Volt 50%—10%
C22	124-17	Single Padder J-4-S

NOTE: C-13 and C-14 in one unit—part number 116-15.

RESISTORS

R1	130-20	100M Ohm—½ Watt—20% 50 Volt—Carbon
R2	130-79	400 Ohm—½ Watt—10% 10 Volt—Carbon
R3	130-94	50M Ohm—½ Watt—10% 10 Volt—Carbon—Ins.
R4	130-23	2M Ohm—½ Watt—20% 10 Volt—Carbon
R5	130-42	20M Ohm—½ Watt—20% 100 Volt—Carbon—Ins.
R6	130-68	1 Meg Ohm—½ Watt—10% 20 Volt—Carbon
R7	130-79	400 Ohm—½ Watt—10% 10 Volt—Carbon
R8	101-41	500M Ohm—Volume Control and Switch
R9	130-106	50M Ohm—½ Watt—10% 100 Volt—Carbon—Ins.
R10	130-101	600 Ohm—½ Watt—10% 10 Volt—Carbon—Ins.
R11	130-68	1 Meg Ohm—½ Watt—10% 20 Volt—Carbon
R12	130-95	12M Ohm—½ Watt—10% 100 Volt—Carbon
R13	130-3	500M Ohm—½ Watt—20% 100 Volt—Carbon
R14	130-5	300M Ohm—½ Watt—20% 10 Volt—Carbon
R15	130-45	250M Ohm—½ Watt—20% 20 Volt—Carbon—Ins.
R16	130-84	200 Ohm—½ Watt—20% 10 Volt—Carbon—Ins.

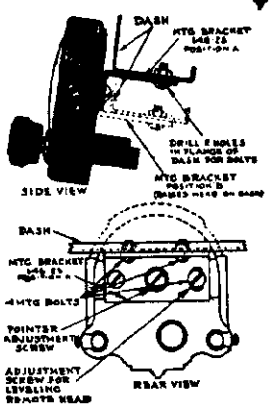

PARTS

T1	111-48	Antenna Filter Coil Assembly
T2	111-47	Antenna Coil Assembly
T3	108-69	Input I.F. Coil—465 K.C.
T4	102-27	Two Gang Variable Condenser
T5	108-70	Output I.F. Coil—465 K.C.
T6	105-22	Output Transformer
T7	110-37	Oscillator Coil Assembly
T8	104-51	Power Transformer
L1	105-23	Filter Choke
L2	105-19	"A" Choke
L3	105-25	"A" Filter Assembly
L4	105-24	"A" Choke
L5	114-34	5¼" Speaker (Field resistance 4 ohms)
V		Vibrator

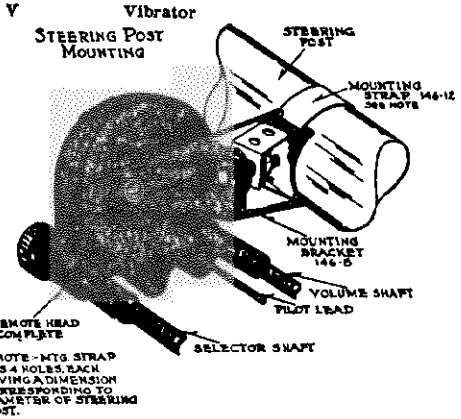

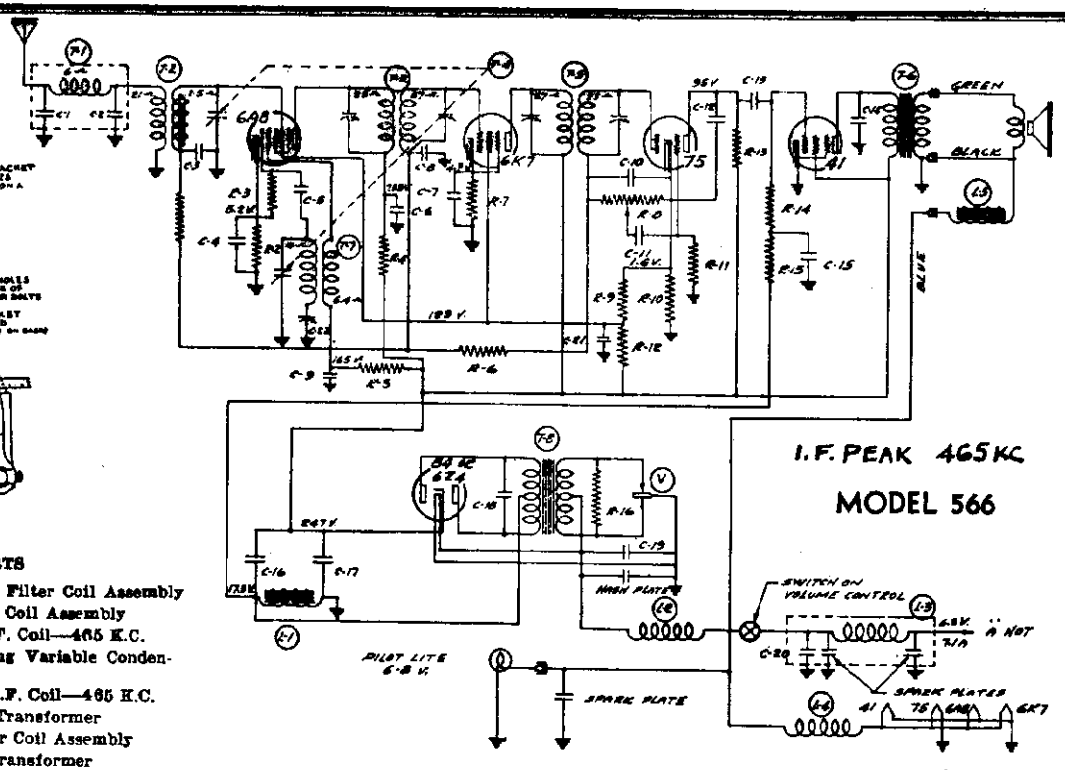

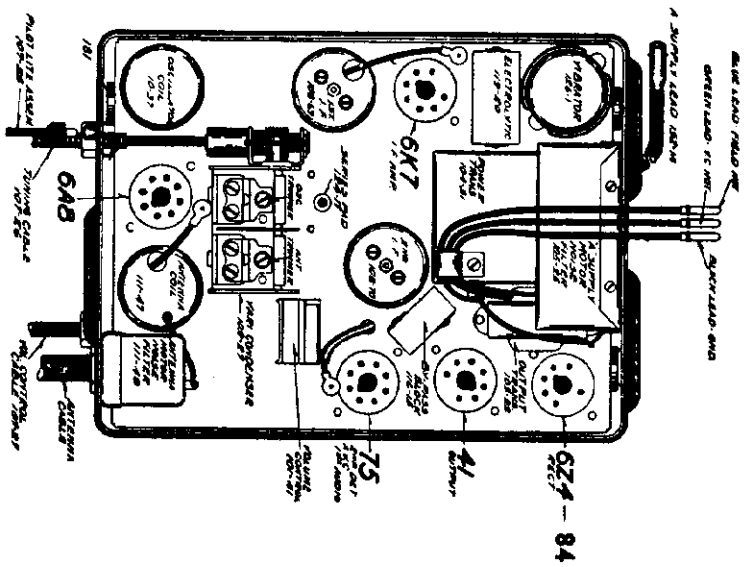

MODEL 566
Alignment, Notes

BELMONT RADIO CORP.

CONNECTIONS TO BATTERY:

The battery cable, number 183-2, (red wire with fuse receptacle at one end and terminal lug at other end) must be connected to battery terminal of ammeter. At the same time connect ammeter capacitor, number 148-3, to battery terminal of ammeter, other end of condenser to any convenient grounded screw on back of instrument panel. Make certain that insulating sleeve is slipped over fuse when fuse is placed in receptacle, before connecting to short battery cable from receiver.

When connected properly, the discharge due to current drawn by the receiver should not indicate on the ammeter. This is important, since if improperly connected, as shown by the deflection of ammeter, additional motor interference may be encountered.

GENERATOR INTERFERENCE:

Remove the generator cutout mounting screw and fasten the condenser (148-1) bracket on the generator cutout mounting lug. Replace the cutout mounting screw and tighten down securely.

Connect the condenser lead to the battery terminal of the cutout. The generator condenser is absolutely necessary as it is used to eliminate a high pitched whining noise which would otherwise be heard as the motor is accelerated.

ANTENNA CONNECTION:

The antenna is connected to the receiver by means of the antenna cable. The antenna wire is the single black wire projecting from the end of the cable. Splice this wire to the roof antenna lead and ground the pig-tail shielding as close to the corner post of the car as possible.

On open and convertible models where underslung strap or plate antennas are used it may be necessary to ground the exhaust pipe and muffler to the frame at both ends with heavy copper braid.

Aerials suitable for open and convertible cars can be purchased from your dealer. They should be mounted as far to the rear of the car as possible and on the side opposite to the tail light wiring.

DIAL ADJUSTMENT:

Tune set to some station of a known frequency (between 800 and 1200 K.C.) hold selector knob, then with a screw driver adjust the slotted screw on the back of the control head, and in that way adjust the dial pointer to the correct frequency setting.

CHECK FOR MOTOR NOISE (Chassis Pickup):

After the above instructions have been followed, with the hood clamped down to prevent radiation and the motor running, the receiver should be turned on and the dial turned off a station, with volume control at maximum. If motor noise is objectionable the next step is to determine whether the interference is originating through chassis pickup or from the antenna.

To check for chassis pickup, disconnect the antenna from the antenna cable and ground the antenna lead to shield of cable. Chassis pickup is due to the electrical interference being radiated or led back through the frame of the car into the receiver or through the storage battery to the receiver.

It may be necessary when chassis pickup is present to ground the choke and gas throttle rods securely to the firewall at the point which they enter the drivers compartment.

Chassis pickup can be reduced by reducing the gap between contacts and the rotating arm in the distributor head. To do this apply solder to the end of the rotor arm. Replace the rotor in the distributor and turn the engine over slowly with the crank in order to clean the excess solder. The rotor should not brush or wipe the contacts inside the distributor cap, but should just clear them. As an additional precaution check the breaker points. They should be thoroughly cleaned and adjusted or new points installed if they are badly worn. In stubborn cases a good grade mica .002 to .005 condenser connected across the breaker points will reduce interference. The ignition system of a car must be kept in good condition and leaky cracked high tension wire and bad spark plugs should be replaced. In many cars the low tension battery leads, etc., are grouped together with the high tension wires. These leads will very often pick up motor noise and feed it into the receiver through the battery circuit. In cases such as these it will be necessary to separate the low tension from the high tension wires and run them through another hole if they run from the engine compartment up to the instrument panel. This condition, as explained previously, is particularly true on the V-8 Ford as the battery and primary leads run through a special tube which also houses the high tension leads. Shield and ground these leads.

NOTE—Where ignition coils are mounted in motor compartments a .5 mfd 600d (148-1 or 148-3) connected between primary coil terminal and receiver mounting bolt will often reduce motor noise.

Accessories such as lighters, electric motor heaters, horns, light switches, automatic relays, electrical gauges such as oil, water and gas are often a source of interference. In these cases the procedure is to try a condenser from ground to various accessories until the interference is eliminated, then install the condenser in these places permanently. Spark intensifiers should not be used.

ANTENNA PICK UP:

Now connect the antenna to the receiver and test for motor noise pick-up, it is entirely probable that if any noise is present it will be very slight and only noticeable between stations. No absolute rule for complete motor noise elimination can be specified inasmuch as many times two cars of the same make present entirely different problems and require bonding or shielding at different points. If motor noise is objectionable, it is due to the interference being radiated and picked up through the antenna system. Motor noise can be radiated into the drivers compartment through the drivers body due to the fact that in the majority of cars the toe board is wood. This can be remedied by covering the entire floor board with copper screen grounded in several places to the frame of the car. This condition is only true in cars which have roof antennas. Under-slung antennas, either of the strap or plate type, will very often pick up motor noise if mounted too far forward on the frame of the car, the noise naturally being picked up due to the close proximity of the antenna to the engine.

It is recommended that if an under-slung antenna is used, that it be mounted as far towards the rear of the car as possible and preferably on the side of the car opposite to the tail light wiring. Naturally the performance of any radio depends on the effectiveness of the antenna. The later model cars are coming through with very good Antennas, already installed and no trouble should be experienced from this angle with of course an occasional exception. Many of the older cars on the market today have a wire network in the roof which is nothing more than ordinary chicken wire. This wire network acts as a support to the roof and is in the majority of cases grounded directly to the body of the car at the point at which the roof meets the sides of the body. Service men frequently tack antennas to the underside of the top material in these cars, this is not satisfactory. There are but two things to do. Either an underslung (plate or strap) antenna must be used or the wire network must be cut from all grounds to the car. If this is done this network will in itself make a very good antenna, but it will be necessary to cut the wire network back for a distance of at least three inches from all sides of the car.

When running the lead-in up the corner post of the car to the roof antenna ground it every few inches to the frame of the body of the car. If this is not possible insulate it, otherwise scratchy noises will result.

STEEL TOP OR TURRET TOP CARS do not contain built-in roof antennas. In cars of this type an under-slung, strap or plate, antenna must be used.

If after all standard methods to reduce motor noise, as outlined above, have been tried and trouble still persists, carefully check the following: the dome light is usually the greatest source of antenna pick-up interference. First check the dome light by disconnecting the dome light connection on the back of the dash and grounding the wire (for location of this wire see car wiring diagram). If this eliminates the interference it indicates clearly that motor noise is being picked up by the dome light wire and radiated into the antenna. A small R.F. choke connected in series with the dome light wire and by-passed to ground at the dome light side of the choke with a .5 or 1 mfd. condenser, will eliminate this source of interference. Wheel or brake noise is probably the most peculiar type of interference and is due to accumulated static charges. This type of interference is only noticeable while the car is in motion and could very easily be confused with ignition interference. Check for this with car running at a good speed, turn the ignition switch off and if the interference continues it is due to either wheel static or a loose electrical connection. To overcome the wheel static condition, use graphite grease in the wheel bearings or insert grounding springs in the hub caps. In the case of external brakes, it is necessary to ground the brake bands to the frame of the car.

Loose connections are a frequent cause of interference. Make certain that light bulb contacts are clean and that they fit tight in their sockets, that all battery cable connections are tight and well grounded. Secondary high tension leads at the distributor cap or the coil very often work loose and a sparking contact results. Make certain that clips on all high tension wires are clean and bright and are pressed firmly into the receptacles on the distributor cap and the ignition coil.

Ignition noise should, if possible, be checked in a location that is free from electrical disturbances such as power lines, electrical equipment, neon signs, street car and elevated lines. This receiver is a very sensitive instrument and will pick up over its antenna system electrical disturbances in its immediate vicinity.

ALIGNING INSTRUCTIONS:

All of the adjustments have been very carefully set with signal generators at the factory and require no further adjustment, unless it becomes necessary to replace a coil or transformer or if the adjustments have been tampered with in the field. Under no circumstances attempt any adjustments without first making certain that adjustment is necessary and only after voltages, tubes and condensers have been checked and found to be normal. To properly re-align this receiver, a test oscillator, as well as an output meter, must be used.

DUMMY ANTENNAS:

The dummy antennas referred to in the following instructions are:

"I.F. Dummy" —A .1 mfd. condenser connected in series with the test oscillator output lead.

"Broadcast Dummy"—A 175 mmfd. condenser connected in series with the output lead of the test oscillator.

RESONANCE INDICATOR:

Use as a resonance indicator an output meter connected across the primary of the speaker input transformer, or by means of an adapter between the plate and the screen of the type 41 output tube. Maximum deflection of the meter indicates resonance. Use only enough signal to get a readily readable output. A low range output meter or the low scale of a multi-range meter should be used.

I.F. ALIGNMENT

1. With variable condenser in its minimum capacity position (plates entirely out of mesh) and with volume control full on, connect test oscillator set at 456 K.C. in series with I.F. dummy antenna, to grid of 6K7 tube.
2. Adjust trimmer condensers of output I.F. transformer (No. 108-70) to resonance with oscillator.
3. Move test oscillator connection to grid of 6A8 tube and adjust trimmer condensers of input I.F. transformer (No. 108-69) to resonance with oscillator, again going over trimmers of output I.F. transformer (No. 108-70). See top view for location of these transformers. There are two adjustments on each and they are accessible from the top of the transformer shield and should be adjusted with an insulated screw driver.

BROADCAST ALIGNMENT

1. With variable condenser in its minimum capacity position, connect test oscillator set at 1500 K.C. in series with broadcast dummy to the antenna lead of the receiver.
2. Adjust oscillator trimmer of variable condenser to resonance. (This adjustment is rear section of gang—see top view.)
3. Shift test oscillator to 1400 K.C. and pick up signal by rotating condenser and adjust antenna trimmer to resonance—see top view.
4. Re-set test oscillator to 600 K.C. and rotate variable condenser to 600 K.C. Adjust series pad, rocking gang condenser to and fro, at the same time adjusting series pad for maximum gain.

   This adjustment is accessible from the top of chassis—see top view.
5. Go back and check 1400 K.C. If adjustment is made here, check 600 K.C. again.
6. Check for sensitivity at 1000 K.C. by setting test oscillator to this frequency and picking up the signal by rotating variable condenser. UNDER NO CIRCUMSTANCES BEND PLATES OF VARIABLE CONDENSER SECTIONS TO CORRECT TRACKING.

MODEL 566
NO SPARK PLUG SUPPRESSORS ARE REQUIRED

MOTOR NOISE SUPPRESSION:

The ignition system of every automobile generates high frequency electrical disturbances which interfere to some extent with the operation of the radio receiver. This disturbance arises from the ignition coil, the distributor and associated wiring. It must either be suppressed at its origin or must be prevented from feeding into the input of the radio receiver through the common storage battery. By proper shielding and by-passing these disturbances are prevented from entering the receiver. The first essential procedure towards minimizing this disturbance is to disconnect the high tension lead to the distributor and insert a distributor suppressor, part number 168-2, as indicated in illustration.

Note: For Ford V-8's, no distributor suppressor is used.

For cap type distributors, exchange standard type 168-2 for a special cable type suppressor, part 168-3, from your dealer.

In cars where the ignition coil is located on the back side of the instrument panel it is often necessary to use an additional capacitor, part number 148-3, obtainable from your dealer. It must be installed from the battery side of the ignition coil to the closest ground on the instrument panel.

Short leads are very important. Where coils are mounted either on the instrument panel or in the driver's compartment, it is necessary to shield the high tension lead from the coil to the distributor.

This can be done by covering the lead first with flexible loom and then with shielded braid, grounding one side of the braid to the instrument panel and the other to a point on the motor block closest to the distributor. This lead should be run as nearly as possible directly from the coil to the distributor, even if it is necessary to drill an extra hole in the fire wall. It may even be necessary in some stubborn cases to move the coil from the driver's compartment and mount it on the motor block as close as possible to the distributor. The new primary wire should be No. 14 shielded low tension cable. Do not run wires close to the high tension leads and make certain that shields are well grounded.

Make certain that the instrument panel has a ground connection to the frame of the car.

For Ford V-8's, it is necessary to remove from the high tension housing attached to the left bank of 4 cylinders the master cable containing the generator wire (yellow wire with black tracer) and the red low tension wire connecting ignition coil to the ignition switch.

These two wires must be removed from high tension housing and shielded. Shielding must be grounded at both ends. A capacitor must be connected between the primary of the ignition coil and ground. Your dealer can supply a special type capacitor for this purpose (part No. 148-6).

Cars with floating power must have the motor bonded to the bulkhead and again to the frame to provide a direct path for the high frequency interference developed in the ignition system. ¾" copper braid will be necessary. SMALL DIAMETER WIRE WILL NOT DO. Bond flexible shaft heads, such as free wheeling, choke wires, etc., which pick up motor noise and reradiate it into the car. Free wheeling cables should be grounded at the point at which they go through the fire wall of the car. In extreme cases it has been found necessary to ground the steering column.

Great care of design has been given the Model 566 to minimize motor noise pick-up. Three sources of motor noise pick-up are antenna pick-up, "A" line pick-up, and chassis pick-up.

Chassis pick-up is reduced to an absolute minimum by completely insulating the inner chassis from the outer case and grounded at carefully selected points to outer case so as to get minimum impedance drops induced by eddy currents around the R.F. end of the chassis. The "A" line pick-up was eliminated by a carefully designed low pass filter which is completely shielded in a can of its own.

Antenna pickup was reduced to a minimum by removing all capacity coupling in the antenna stage and thus is further augmented by a low pass filter which discriminates against all frequencies outside the broadcast band.

A further precaution that was taken against motor noise is the insulated couplings used on the end of the volume control shaft and variable condenser shaft. This completely kills any motor noise loop that would have been caused by the grounding of the flexible control cables through variable condenser.

SERVICE NOTES:

Voltages taken from different points of circuit to chassis are measured with volume control full on, all tubes in their sockets and speaker connected, with a volt meter having a resistance of 1000 ohms per volt. These voltages are clearly indicated on the circuit diagram.

In order to prevent signal from acting upon A.V.C. and affecting accuracy of voltage measurements, aerial and ground leads should be short circuited while making measurements.

All voltages are to be measured with 6.3 volts input to receiver. Resistances of coils and transformer windings are indicated in ohms on schematic circuit diagram.

To check for open by-pass condensers, shunt each condenser with another condenser of the same capacity and voltage rating, which is known to be good, until the defective unit is located.

Failure to operate, noisy or weak reception is usually due to defective tubes, the tubes making poor contact with sockets or grid clips making poor contact with the caps of the tubes. Tubes may be checked very easily by replacing with other tubes which are known to be good. If fuse blows out frequently and insulating sleeve has been properly placed over fuse, the trouble is probably in the vibrator, it should be replaced. Do not attempt to make any adjustments on the vibrators.

©John F. Rider, Publisher

BELMONT RADIO CORP.

MODEL 585, Series D
Schematic
Trimmers
Parts List

MODEL 585D

I. F. FREQUENCY
465 K. C.

TUNING RANGE—
Standard Broadcast Band
530-1720 Kilocycles.
Intermediate Band
2550-7700 Kilocycles.
Short Wave Band
7.0-18.0 Megacycles.

BOTTOM VIEW OF CHASSIS

WAVE CHANGE SWITCH

TUNING

OSCILLATOR 10-32

B. C. SERIES PAD 454 KC

ANTENNA 50' W #27

MISCELLANEOUS

T1.	105-10	Antenna Choke Coil
T2.	111-27	Antenna Coil
T3.	110-22	Oscillator Coil
T4.	108-38A	Input I.F. Transformer
T5.	108-40	Output I.F. Transformer
C	102-12	Two Gang Variable Cond.
S	125-6	Wave Change Switch
L1.	104-14A	Power Transformer 50/60 Cycle
L1.	104-18	Power Transformer 25 Cycle
L2.	114-11	Speaker—Field Resistance 1350 Ohms
L1.	104-17	Power Trans. Universal 50/60 Cycle
L1.	104-41	Power Trans. Universal 25 Cycle.

No.	Part No.	DESCRIPTION
		RESISTORS
R1.	130-12	50M Ohm—½ Watt—20%—20 V. Carbon
R2.	130-89	700 Ohm—½ Watt—20%—20 V. Carbon
R3.	130-20	100M Ohm—½ Watt—20%—50 V. Carbon
R4.	130-44	25M Ohm—½ Watt—20%—150 V. Carbon
R5.	130-42	20M Ohm—½ Watt—20%—100 V. Carbon
R6.	130-32	250 Ohm—½ Watt—30%—10 V. Wire Wound
R7.	130-12	50M Ohm—½ Watt—20%—20 V. Carbon
R8.	130-3	500M Ohm—½ Watt—20%—100 V. Carbon
R9.	101-18	500M Ohm Volume Control
R10.	130-19	1 meg Ohm—½ Watt—20%—100 V. Carbon
R11.	130-11	250M Ohm—½ Watt—10%—100 V. Carbon
R12.	130-11	250M Ohm—½ Watt—10%—100 V. Carbon
R13.	130-46	.15M Ohm—½ Watt—10%—20 V. Carbon
R14.	130-47	180M Ohm—½ Watt—10%—100 V. Carbon
R15.	130-46	800M Ohm—½ Watt—10%—100 V. Carbon
		CONDENSERS
C1.	129-23	.002 Mica—MW—5%
C2.	100-20	.1 x 120 V.—25%
C3.	129-5	.0001 Mica—MT—20%
C4.	100-20	.1 x 200 V.—25%
C5.	129-24	.00038—MT—5%
C6.	118-1	.1x 200 V.—Dual Plus 50%: Minus 10%
C7.	118-1	.1 x 200 V.—Dual Plus 50%: Minus 10%
C8.	118-1	.1 x 200 V.—Dual Plus 50%: Minus 10%
C9.	118-1	.1 x 200 V.—Dual Plus 50%: Minus 10%
C10.	129-51	.000125—Mica MT—20%
C11.	129-51	.000125—Mica MT—20%
C12.	100-22	.05 x 200 V.—25%
C13.	103-7	.8 mfd. x 300 V. Electrolytic
C14.	100-11	.01 x 400 V.—25%
C15.	100-19	.006 x 600 V.—25%
C16.	118-1	.1 x 200 V.—Dual Plus 50%: Minus 10%
C17.	118-1	.1 x 200 V.—Dual Plus 50%: Minus 10%
C18.	103-6	.8 mfd. x 350 V. Electrolytic
C19.	124-5	B. C. Series Pad J-3-S.

©John F. Rider, Publisher

©John F. Rider

MODEL 585 - Series D

5-Tube 3-Band Superheterodyne with Avc.

DESCRIPTION

The Tube complement of this chassis is as follows:
1 Type 6F7—triode pentode as oscillator and first detector.
1 Type 6K7—remote cut-off pentode as I.F. amplifier.
1 Type 75—duplex diode triode as diode detector, A.V.C. and A.F.
1 Type 6F6—pentode output tube.
1 Type 80—high vacuum rectifier.

Transformers are available and chassis are sometimes equipped with universal transformers for operation on 40 and 60 cycles and with primary taps for 108, 125, 150, 220 and 250 volts (see instructions) and also sometimes equipped with 25 cycle transformers with 105-115 volt or 220 volt primaries, not universals.

SERVICE NOTES

Voltages taken from different points of circuit to chassis are measured with volume control full on, all tubes in their sockets and speaker connected, with a volt meter having a resistance of 1000 ohms per volt. These voltages are clearly indicated on the circuit diagrams.

IN ORDER TO PREVENT SIGNAL FROM ACTING UPON AVC AND AFFECTING ACCURACY OF VOLTAGE MEASUREMENTS, AERIAL AND GROUND LEADS SHOULD BE SHORT CIRCUITED WHILE MAKING MEASUREMENTS.

All voltages are to be measured with 119 volts on the primary of the power transformer.

Resistances of coils and transformer windings are indicated in ohms on schematic circuit diagrams.

To check for open by-pass condensers, shunt each condenser with another condenser of the same capacity and voltage rating, which is known to be good, until the defective unit is located.

ALIGNING INSTRUCTIONS

No aligning adjustments should be attempted without first thoroughly checking over all other possible causes of trouble, such as poor installations, open or grounded antenna systems, low line voltages, defective tubes, condensers and resistors. In order to properly align this chassis, an oscillator (generator) is absolutely necessary. No aligning adjustments should be attempted with the chassis in the cabinet. To remove the knobs, pull them off and to take the chassis out of the cabinet, remove the three bolts by which it is fastened and the speaker plug which you will find on the front flange of the chassis panel.

Aligning I. F. Transformers

1. With volume control full on, the extreme right of its rotation, and with wave changing switch in the broadcast position, extreme left of its rotation, and with variable condenser at its minimum capacity position, plates entirely out of mesh, adjust the I.F. transformers (two adjustments at the top of parts number 108-38 and 108-40—see top view).
   (a) Connect external oscillator which has been adjusted to 465 kilocycles in series with I.F. dummy antenna, to the control grid cap of the type 6K7 tube and chassis ground. Adjust output I.F. transformer, part number 108-40, to resonance.
   (b) Move generator output clip from grid of 6K7 to grid cap of type 6F7 tube and align input I.F. transformer, part number 108-38.
   (c) With generator connected to grid of type 6F7 tube, readjust output I.F. transformer, part number 108-40, to resonance.

Broadcast Band Alignment—
(540 - 1720 Kilocycles)

1. With wave changing switch in the broadcast position, extreme left of its rotation, and with gang condenser in its minimum capacity position, plates entirely out of mesh, connect an external oscillator in series with broadcast dummy antenna to tan antenna and black ground leads and make the following adjustments:
   (a) With external oscillator set at 1720 kilocycles, adjust oscillator trimmer to resonance, for location of this adjustment, number 6, see diagram.
   (b) Re-set external oscillator to 1400 kilocycles, rotate condenser, pick up oscillator signal and adjust antenna trimmer to resonance. For location of this adjustment, number 3, see diagram.
   (c) Re-set external oscillator to 600 kilocycles and adjust series pad to resonance, rotate condenser and move dial pointer to 600 kilocycles by gently rocking condenser to and fro. Pick up oscillator signal while adjusting series pad to resonance, maximum deflection on an output meter. This adjustment is accessible from the top of the chassis and is located between variable condenser and power transformer, see top view—part number 134-16.
   (d) Check for tracking and sensitivity at 1000 kilocycles.

NOTE (Series "B", "C" and "D" only)

25 Cycle Chassis differ only from 60 cycle chassis in that part number 104-18 transformer is used in place of 50/60 cycle transformer, part number 104-14.

Short Wave Band Alignment—
(7.6 - 19.0 Megacycles)

1. This band is aligned after the I.F. adjustments have been completed. Set wave changing switch to short wave position, extreme right of its rotation, set dial pointer to 18 megacycles.
   (a) With external oscillator adjusted to 18 megacycles and connected in series with short wave dummy antenna to tan antenna and black ground leads, adjust the oscillator short wave trimmer until generator signal is picked up. For location of this adjustment, number 4, see diagram.
   (b) Adjust short wave antenna trimmer to resonance. For location of this adjustment, number 1, see diagram.
   (c) Re-set external oscillator to 9 megacycles, rotate condenser, move dial pointer to 9 megacycles and check for tracking and sensitivity. Do not bend plates. NOTE: It is extremely necessary in making all of the above adjustments that the fundamental signal of the oscillator be tuned in and not the image frequency, which will fall below the fundamental.

Intermediate Band Alignment—
(2.35 - 7.7 Megacycles)

1. With wave changing switch in center position, and with dial pointer set to 7 megacycles, make the following adjustments:
   (a) With external oscillator set at 7 megacycles and connected in series with short wave dummy antenna, as for short wave adjustments, adjust trimmer of oscillator coil, part number 110-22 until 7 megacycle signal is picked up. For location of this adjustment, number 5, see diagram.
   (b) Adjust antenna trimmer to resonance, adjustment number 2, see diagram.
   (c) Re-set external oscillator to 2.5 megacycles (2500 kilocycles), rotate variable condenser, move pointer, pick up oscillator signal and check for tracking and sensitivity. NOTE: It is extremely necessary in making all of the above adjustments that the fundamental signal of the oscillator be tuned in and not the image frequency, which will fall below the fundamental.

LIST OF REPAIR PARTS - MODEL 585 (SERIES A - B - C - D)

Parts Used in Ser. A	Parts Used in Ser B	Parts Used in Ser C-D	DESCRIPTION	Not Used in Set	List Price Each
			CONDENSERS		
100-11	100-11	100-11	.01 x 400V—25%	1	$0.25
100-15	100-15	100-15	.015 x 400V—Plus 10%; Minus 20%..	1	.25
100-19	100-19	100-19	.006 x 600V—25%	1	.25
100-20	100-20	100-20	.1 x 120V—25%	4	.25
Not Used	100-22	100-22	.05 x 200—25%	1	.25
Not Used	103-6	103-6	8 Mfd. x 350V Electrolytic	1	.75
Not Used	103-7	103-7	8 Mfd. x 300V Electrolytic	1	.75
118-1	118-1	118-1	Dual .1 x 200V—Plus 50% Minus 10% (Series B & C use 3 per set)	1	.50
119-11	Not Used	Not Used	4-3-4 Mfd. Electrolytic	1	2.00
119-12	Not Used	Not Used	8-8-4 Mfd. Electrolytic (For 25 Cy. Only	1	2.50
129-2	129-2	129-2	.0005 Mica—MT—20%	2	.25
129-5	129-5	129-5	.0001 Mica—MT—20%	1	.25
129-15	129-15	Not Used	.00035 Mica—MT—5%	1	.25
129-16	129-16	Not Used	.00287 Mica—MW—5%	1	.25
Not Used	Not Used	129-23	.002 Mica—MW—5%	1	.25
Not Used	Not Used	129-24	.000425 Mica—MT—5%	1	.25
			RESISTORS		
130-3	130-3	130-3	500M Ohm—1/5 Watt—20%—100V—Carbon	1	.20
130-11	130-11	130-11	250M Ohm 1/3 Watt—20%—50V—Carbon	1	.20
130-12	130-12	130-12	50M Ohm—1/3 Watt—20%—20V—Carbon	1	.20
130-19	130-19	130-19	1 Meg Ohm—1/3Wat—20%—100V—Carbon	1	.20
130-20	130-20	130-20	100M Ohm—1/5 Watt—20%—50V—Carbon	1	.20
Not Used	130-32	130-32	250 Ohm—1/3 Watt—20%—10V—Wire W.	1	.20
130-38	Not Used	Not Used	2 Meg Ohm—1/3 Watt—20%—20V—Carbon	1	.20
130-39	130-39	130-39	700 Ohm—1/3 Watt—20%—20V—Carbon	1	.20
130-40	Not Used	Not Used	10M Ohm—1/2 Watt—20%—150V—Carbon	1	.20
130-41	Not Used	Not Used	800 Ohm—1/3 Watt—20%—20V—Carbon	1	.20
130-42	130-42	130-42	20M Ohm—1/2 Watt—20%—100V—Carbon	1	.20
Not Used	130-44	130-44	25M Ohm—1/2 Watt—20%—150V—Carbon	1	.20
Not Used	130-46	130-46	800M Ohm—1/5 Watt—10%—100V—Carbon	1	.20
Not Used	130-47	130-47	180M Ohm—1/5 Watt—10%—100V—Carbon	1	.20
Not Used	130-48	130-48	15M Ohm—1/5 Watt—10%—20V—Carbon	1	.20
			POWER TRANSFORMERS		
104-14	104-14	104-14	50/60 Cycle Power Transformer	1	3.00
104-17	104-17	104-17	Universal Power Trans.—40 Cy. Primary	1	5.00
104-18	104-18	104-18	25 Cycle Power Transformer	1	4.00

			COILS		
Not Used	105-9	Not Used	Antenna Choke Coil	1	.50
Not Used	Not Used	105-10	Antenna Choke Coil	1	.50
108-28	108-28	Not Used	Input I. F. Transformer Complete	1	1.50
108-37	Not Used	Not Used	Output I. F. Transformer Complete	1	1.50
Not Used	108-38	Not Used	Output I. F. Transformer Complete	1	1.50
Not Used	Not Used	108-38	Input I. F. Transformer Complete	1	1.50
Not Used	Not Used	108-40	Output I. F. Transformer Complete	1	1.50
110-13	Not Used	Not Used	Oscillator Coil Complete	1	2.50
Not Used	110-14	Not Used	Oscillator Coil Complete	1	2.50
Not Used	Not Used	110-22	Oscillator Coil Complete	1	2.25
111-17	Not Used	Not Used	Antenna Coil Complete	1	2.25
Not Used	111-18	Not Used	Antenna Coil Complete	1	2.25
Not Used	Not Used	111-27	Antenna Coil Complete	1	2.25
			SOCKETS		
121	121	121	Five Prong Socket—Type 80	1	.10
121	121	121	Five Prong Socket—Speaker	1	.10
121	121	121	Six Prong Socket—Type 42	1	.10
121	121	121	Six Prong Socket—Type 75	1	.10
121	121	121	Six Prong Socket—Type 6D6	1	.10
121	121	121	Seven Prong Socket—Type 6F7	1	.10
			MISCELLANEOUS		
101-18	101-18	101-18	Volume Control	1	1.35
102-12	102-12	102-12	Two Gang Variable Condenser	1	3.00
106-15	Not Used	Not Used	Band Set Switch	1	.50
107-8	107-5	107-5	Line Cord	1	.10
112-15	112-15	112-15	Pointer	1	.05
112-16	112-16	112-16	Pointer	1	.05
112-19	112-19	112-19	Drive Cord Complete	1	.40
112-24	112-26	112-26	Pointer Drive Complete	1	1.25
112-31	112-31	112-31	Condenser Shaft	1	.05
112-40	112-40	112-40	Dial Light Bracket	1	.10
112-62	112-62	112-62	Drive Shaft Assembly	1	.50
112-66	112-66	112-66	Escutcheon with Glass	1	.60
112-64	Not Used	Not Used	Dial Scale	1	.25
Not Used	112-64B	112-64B	Dial Scale	1	.25
115-22	115-22	115-22	Pilot Bezel	2	.15
115-5	116-5	116-5	Pilot Light Bracket	1	.10
124-16	124-16	124-16	Pilot Light Bulb—6.3 Volt—T6½	1	.25
125-8	125-5	125-8	Tube Shield Bracket	1	.75
131-2	131-2	131-2	Tube Shield	2	.15
131-10	131-10	131-10	Volume Control Shaft	1	.20
114-12	Not Used	Not Used	Six Inch Speaker	1	6.00
Not Used	114-18	114-15	Six Inch Speaker Midget Cabinet	1	6.00

All resistors are RMA color coded—specify value and/or resistor number (per schematic diagram) and model number.

When ordering condensers, specify part number, model number and/or capacitor (per schematic diagram) and model number.

All prices quoted are list and are subject to the usual trade discounts.

Prices subject to change without notice.

Shipments are F.O.B. our Factory. When remitting in advance, please include postage.

We cannot supply speaker cones only. We can replace a speaker on which the cone has been damaged for $1.50, if defective speaker is returned.

BELMONT RADIO CORP.

MODEL 586, Series A
Above Serial 6E248475
Schematic, Socket Alignment, Parts

ALIGNING I.F. TRANSFORMERS: (465 K.C.):

Part No. 108-76 Output I.F. Transformer
Part No. 108-75 Input I.F. Transformer

These I.F. transformers have two adjustments, both of which are accessible from the top of chassis (see top view).

1. With volume control full on (the extreme right of its rotation), the band changing switch in the broadcast position, (extreme left of its rotation), and with the variable condenser set to approximately 1400 kilocycles, make the following adjustments:

   (a) Connect external oscillator set at 465 kilocycles, in series with "Dummy 1," to the control grid cap of the type 78 tube, and adjust the output I.F. transformer (No. 108-76) to resonance.

   (b) With "Dummy 1" still connected, move oscillator output clip from grid of 78 to grid cap to 6A7 and adjust input I.F. transformer (No. 108-75) to resonance.

   (c) With oscillator still connected to 6A7, readjust output I.F. transformer (108-76) if necessary.

DUMMY ANTENNAS:

The following dummy antennas are used in aligning and are referred to in the following alignment instructions as "Dummy 1," "Dummy 2," and "Dummy 3."

Dummy 1: (I.F.)—Consists of a .1 mfd. condenser connected in series with the external oscillator.

Dummy 2: (Broadcast)—Consists of a 200 mmfd. condenser and a 20 ohm resistor connected in series with each other and in series with the external oscillator.

Dummy 3: (Short Wave)—Consists of a .1 mfd. condenser and a 400 ohm resistor connected in series with each other and in series with the external oscillator.

SHORT WAVE BAND ANTENNA ADJUSTMENT:

1. With the band switch in the short wave position, and with external oscillator connected in series with "Dummy 3," to the tan antenna lead and black ground lead, make following adjustment:

   (a) Set external oscillator to 6 megacycles and adjust the short-wave antenna trimmer to resonance. This adjustment is the trimmer mounted on the rear section of the variable gang condenser.

BROADCAST AND SHORT WAVE BAND ALIGNMENT

Broadcast Band: -535 to 1720 Kilocycles.
Short Wave Band:—2280 to 6900 Kilocycles.

Important:—These adjustments must be made in the following order:

SHORT WAVE OSCILLATOR ADJUSTMENT:

1. With band switch in the short wave band position, extreme right of its rotation, and with the gang condenser in its minimum capacity position, plates entirely out of mesh, and with the external oscillator connected in series with "Dummy 1" to grid cap of the 6A7 tube, make the following adjustment:

   (a) Set external oscillator to 6.6 megacycles and adjust short wave oscillator trimmer to resonance. This adjustment is marked "S.W. Osc." (see top view of chassis, Fig. 1, for location of this adjustment).

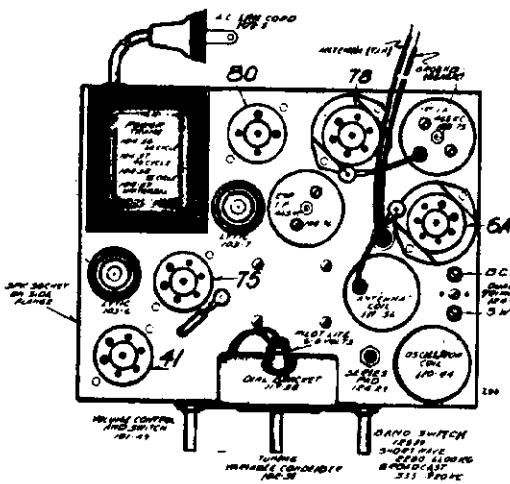

FIG. 1—TOP VIEW

NOTE: Make certain that the fundamental 6.6 megacycles signal has been tuned in and not the image frequency, noting that the image appears when the tuning knob is moved to approximately 5.7 megacycles.

BROADCAST BAND OSCILLATOR ADJUSTMENT:

1. With band switch in the broadcast position, extreme left of its rotation, and with the gang condenser in its minimum capacity position, plates entirely out of mesh, and with external oscillator connected in series with "Dummy 1" to grid cap of the 6A7 tube, make the following adjustment:

   (a) Set external oscillator to 1720 K.C. and adjust broadcast oscillator trimmer to resonance. This adjustment is the trimmer mounted on the front section of the variable gang condenser.

BROADCAST BAND ANTENNA ADJUSTMENT:

1. With the band switch still in the broadcast position, move the external oscillator from the grid cap of the 6A7 tube to the tan antenna lead and black ground lead, in series with "Dummy 2" and make the following adjustments:

   (a) Set external oscillator to 1550 K.C., rotate variable gang condenser and pick up signal. Adjust broadcast antenna trimmer to resonance. This adjustment is marked "B.C. Ant." (See top view of chassis, Fig. 1, for location of this adjustment.)

   (b) Re-set external oscillator to 600 K.C. and adjust broadcast series pad to resonance by rotating condenser to approximately 600 K.C., rocking it slowly to and fro until, by adjusting series pad, maximum output is attained. This adjustment is located on the top of the chassis directly in front of the antenna coil. (See top view of chassis, Fig. 1).

   (c) Repeat adjustments "a" and "b" until sensitivity is at its maximum.

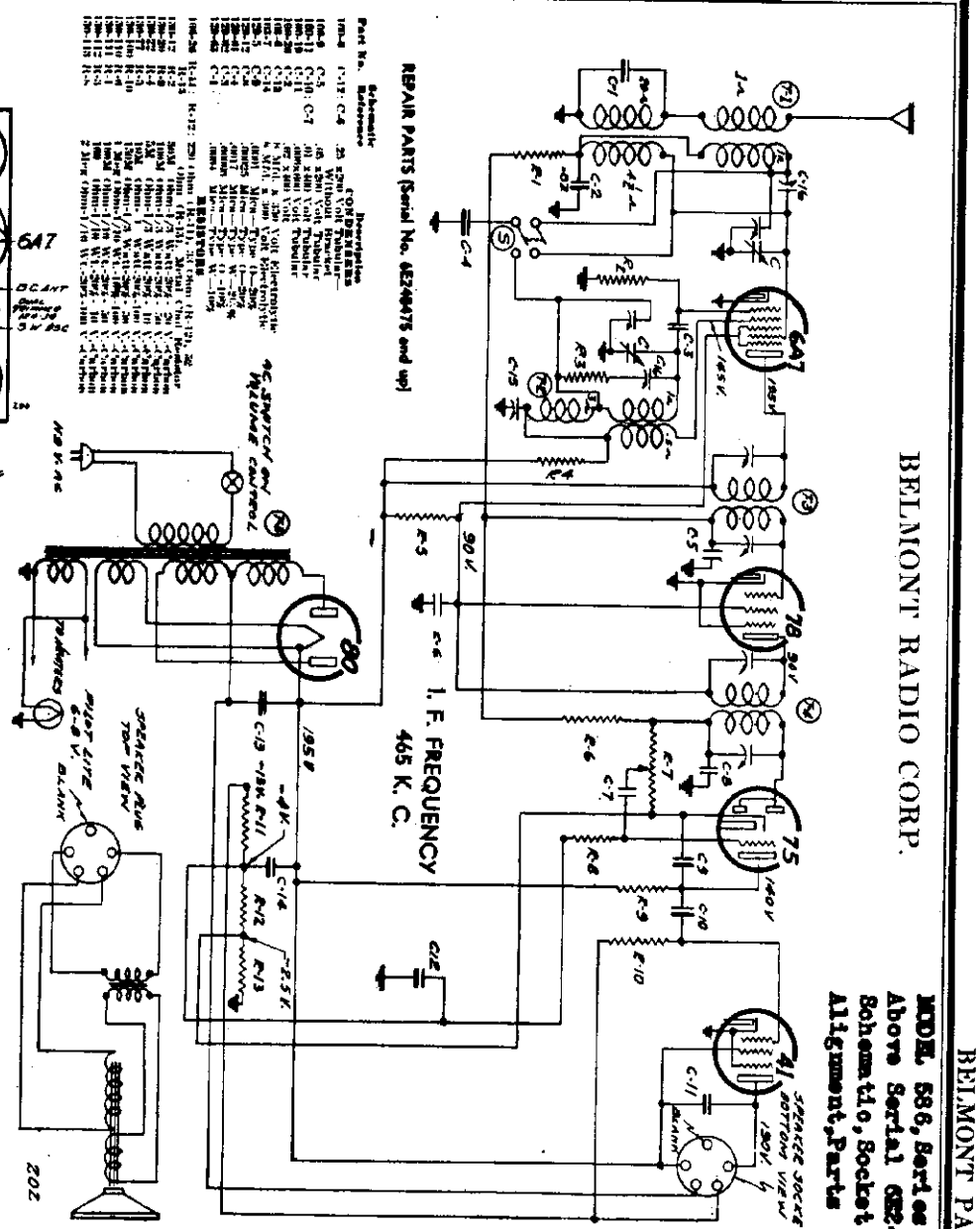

©John F Dilaw

MODEL 601, Series A & B
Schematic, Socket, Parts
Alignment, Notes

BELMONT RADIO CORP.

ALIGNING I.F. TRANSFORMERS: (465 K.C.):

Part No. 108-83 Output I.F. Transformer
Part No. 108-82 Input I.F. Transformer

These I.F. transformers have two adjustments, both of which are accessible from the top of chassis (see top view).

1. With volume control full on (the extreme right of its rotation), and with the variable condenser set to approximately 1400 kilocycles, make the following adjustments:

   (a) Connect external oscillator set at 465 kilocycles, in series with .1 mfd. condenser, to the control grid cap of the type 78 tube, and adjust the output I.F. transformer (No. 108-83) to resonance.

   (b) Move oscillator output clip from grid of 78 grid cap of 6A7 and adjust input I.F. transformer (No. 108-82) to resonance.

   (c) With oscillator still connected to 6A7, readjust output I.F. transformer (108-83) if necessary.

R.F. ALIGNMENT: (535-1720 K.C.)

1. Unsolder the antenna wire from its terminal on the antenna coil and with gang condenser in its minimum capacity position, plates entirely out of mesh, connect an external oscillator in series with a 50 mmf. condenser to the antenna terminal on the antenna coil and chassis ground and make the following adjustments:

   (a) With external oscillator set at 1720 kilocycles, adjust oscillator trimmer (rear of gang condenser).

   (b) Re-set external oscillator to 1550 kilocycles, rotate condenser, pick up oscillator signal and adjust antenna trimmer to resonance (front section of gang condenser).

   (c) Check sensitivity at 600 and 1000 kilocycles.

Type 6A7 Pentagrid Mixer, First Detector-oscillator
Type 78 Remote Cut-Off Pentode, I.F. Amplifier (465 K.C.)
Type 75 Duplex Diode Triode Second Detector, A.V.C. and First Audio.
Type 43 Pentode Output Amplifier
Type 25Z5 High Vacuum Rectifier.
Type L49B Ballast Tube.

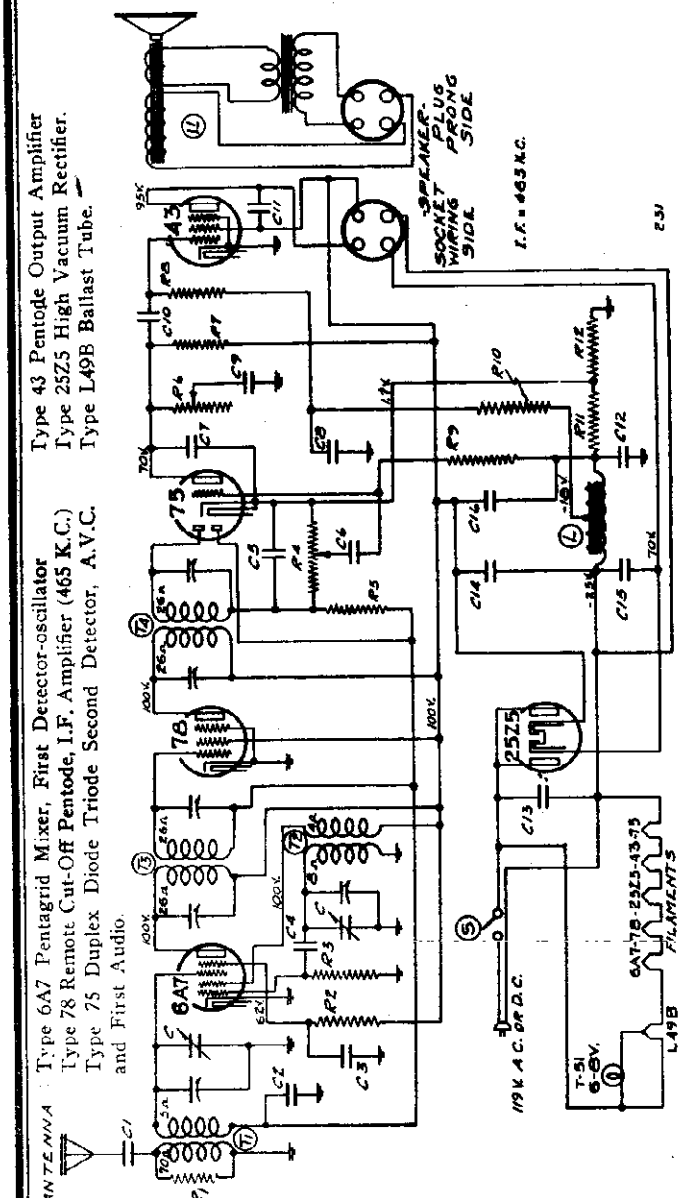

MODEL 601—SERIES A

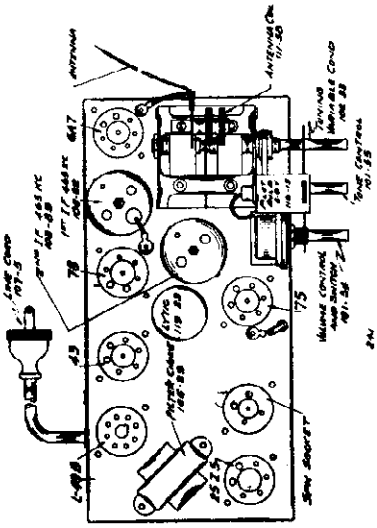

FIG. 2—TOP VIEW

RESISTORS

No.	Part No.	Description
R1	130-12	50M Ohm—½W—20%—20V—Carbon
R2	130-21	20M Ohm—½W—20%—20V—Carbon
R3	130-12	50M Ohm—½W—20%—20V—Carbon
R4	101-54	1 meg Ohm—Volume Control
R5	130-119	3 meg Ohm—½W—20%—100V—Carbon
R6	101-55	1 meg Ohm—Tone Control
R7	130-120	100M Ohm—½W—20%—50V—Carbon
R8	130-5	300M Ohm—½W—20%—100V—Carbon
R9	130-38	2 meg Ohm—½W—20%—100V—Carbon
R10	130-9	200M Ohm—½W—20%—20V—Carbon
R11	106-28	35 Ohm—Muter Strip
R12	106-28	50 Ohm—Muter Strip

NOTE: R11 and R12 in one unit—No. 106-28.

CONDENSERS

C1	100-29	.002 ±600 Volt—25%
C2	100-22	.05 ±200 Volt—25%
C3	100-22	.05 ±200 Volt—25%
C4	129-12	.00025 Mica—MT—20%
C5	129-12	.00025 Mica—MT—20%
C6	100-11	.01 ±400 Volt—20%
C7	129-2	.0005 Mica—MT—20%
C8	100-20	.1 ±200 Volt—25%
C9	100-11	.01 ±400 Volt—25%
C10	100-11	.01 ±400 Volt—25%
C11	100-25	.002 ±600 Volt—25%
C12	100-5	.25 ±200 Volt—20%
C13	100-39	.1 ±400 Volt—20%
C14	119-25	16 mfd.x160 Volt—Working Voltage
C15	119-25	5 mfd.x160 Volt—Working Voltage
C16	119-25	8 mfd.x160 Volt—Working Voltage

NOTE: C14, C15, and C16 in one unit—No. 119-25

C	102-33	One section of two gang condenser
T1	111-57	Antenna Coil
T2	110-46	Oscillator Coil
T3	108-82	Input I.F. Coil—465 Kc.
T4	108-83	Output I.F. Coil—465 Kc.
L	105-29	Filter Choke (Resistance 600 Ohms)
L1	114-43	Five Inch Speaker (Field resistance 3000 Ohms)
S	101-54	On and off switch on Volume Control

TUNING RANGE—
Standard Broadcast Band
535-1720 Kilocycles

MODEL 601—SERIES B is the same as Series A, except for the following changes:-
1 - The C15 condenser was eliminated.
2 - The C14 condenser was replaced by a C15 (Part #119-29) 50 mfd. capacity, and the C16 was replaced by a C14 (Part #119-29) 5 mfd. capacity.

© John F. Rider, Publisher

BELMONT RADIO CORP.

**MODEL 587, Series
Schematic, Socket
Trimmers, Parts**

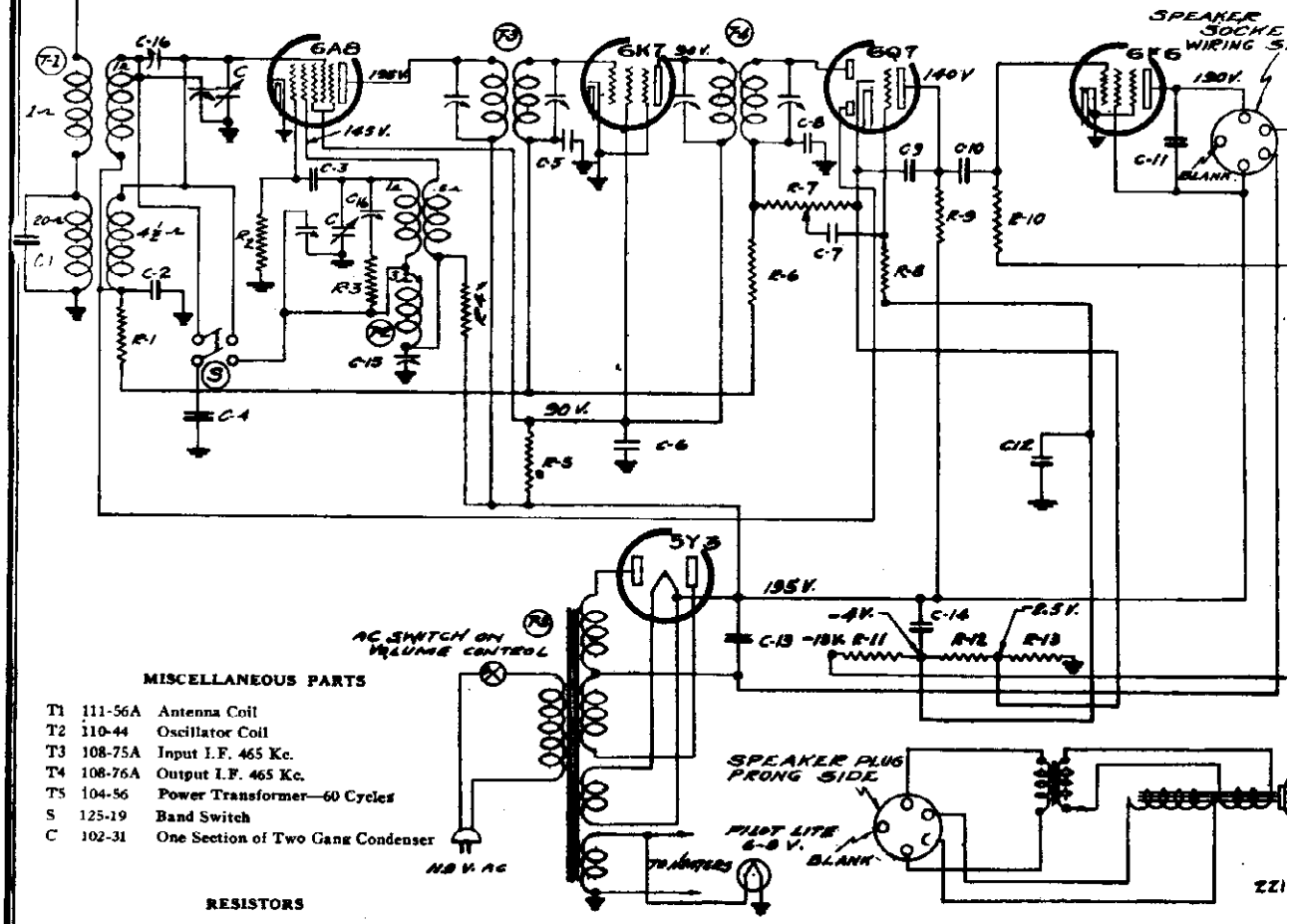

MISCELLANEOUS PARTS

T1	111-56A	Antenna Coil
T2	110-44	Oscillator Coil
T3	108-75A	Input I.F. 465 Kc.
T4	108-76A	Output I.F. 465 Kc.
T5	104-56	Power Transformer—60 Cycles
S	125-19	Band Switch
C	102-31	One Section of Two Gang Condenser

RESISTORS

No.	Part No.		Description
R1	130-111	100M	Ohms 1/10W—20%—50V Carbon
R2	130-12	50M	Ohms 1/3 W—20%—20V Carbon
R3	130-112	100	Ohms 1/10W—20%—10V Carbon
R4	130-22	5M	Ohms 1/3 W—20%—10V Carbon
R5	130-77	10M	Ohms 1 W—20%—100V Carbon
R6	130-110	1 meg	Ohm 1/10W—10%—100V Carbon
R7	101-49	1 meg	Ohm Volume Control
R8	130-113	2 meg	Ohm 1/10W—20%—100V Carbon
R9	130-20	100M	Ohms 1/3W—20%— 50V Carbon
R10	130-100	150M	Ohms 1/3W—20%— 50V Carbon
R11	106-26	220	Ohms
R12	106-26	33	Ohms
R13	106-26	52	Ohms

NOTE: R11, R12, and R13 in one unit—106-26

CONDENSERS

C1	129-63	.0004 Mica—W—10%
C2	100-26	.02 x 400 Volt—25%
C3	129-62	.00003 Mica—0—10%
C4	129-61	.0017 Mica—W—2½%
C5	100-9	.05 x 200 Volt—25%
C6	100-6	.25 x 200 Volt—25%
C7	100-11	.01 x 400 Volt—25%
C8	129-12	.00025 Mica—0—20%
C9	129-12	.00025 Mica—0—20%
C10	100-11	.01 x 400 Volt—25%
C11	100-19	.006 x 600 Volt—25%
C12	100-6	.25 x 200 Volt—25%
C13	103-6	8 mfd. x 350 Volt Electrolytic
C14	103-7	8 mfd. x 300 Volt Electrolytic
C15	124-29	Adjustable condenser 390 mmf. working capacity
C16	124-30	Adjustable Dual Condenser

**I. F. FREQUENCY
465 K. C.**

MODEL 587—SERIES A

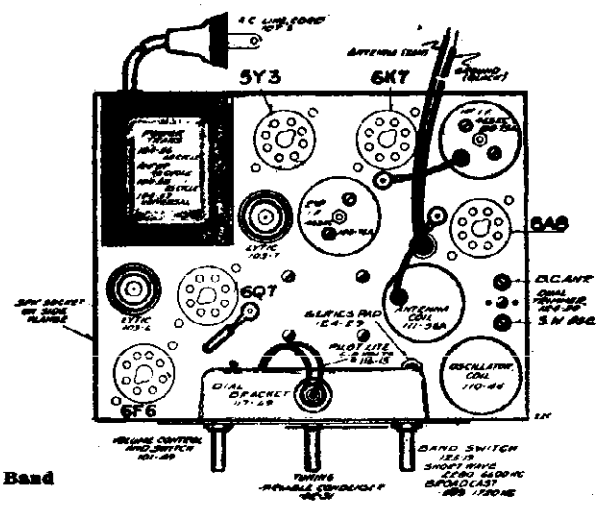

TUNING RANGE—

**Standard Broadcast Band
535-1720 Kilocycles.**

**Short Wave Band
2280-6600 Kilocycles**

FIG. 1—TOP VIEW

©John F. Rider, Publisher

©John F. Rider

MODEL 587 - Series A

5-TUBE

2-Band A. C. Superheterodyne Receiver

TUBES:

The tube complement of this chassis consists of the following tubes.

The type and function of each tube is as follows:

1—Type 6A8 Pentagrid Mixer, First Detector-oscillator

1—Type 6K7 Remote Cut-Off Pentode, I. F. Amplifier (465 K.C.)

1—Type 6Q7-G Duplex Diode Triode Second Detector, A.V.C. and First Audio.

1—Type 6F6-G Pentode Output Amplifier.

1—Type 5Y3 High Vacuum Rectifier.

Transformers are available and chassis are sometimes equipped with universal transformers for operation on 40 and 60 cycles and with primary taps for 108, 125, 150, 220 and 250 volts (see parts list) and also sometimes equipped with 25 cycle transformers with 105-115 volt or 220 volt primaries, not universals.

SERVICE NOTES:

Voltages taken from different points of circuit to chassis are measured with volume control full on, all tubes in their sockets and speaker connected, with a volt meter having a resistance of 1000 ohms per volt.

All voltages as indicated on diagram are measured with 119 volts on the primary of the power transformer.

Resistances of coil windings are indicated in ohms on the schematic circuit diagram.

To check for open by-pass condensers, shunt each condenser with another condenser of the same capacity and voltage rating, which is known to be good; until the defective unit is located.

Excessive hum, stuttering, low volume and a reduction in all D.C. voltages is usually caused by a shorted electrolytic condenser; open by-pass condensers frequently cause oscillation and distorted tone.

ALIGNING INSTRUCTIONS:

CAUTION:—No aligning adjustments should be attempted without first thoroughly checking over all other possible causes of trouble, such as poor installations, open or grounded antenna systems, low line voltages, defective tubes, condensers and resistors. In order to properly align this chassis, an oscillator (generator) is absolutely necessary. No aligning adjustments should be attempted with the chassis in the cabinet. Remove the knobs and the four bolts which are used to fasten the chassis.

RESONANCE INDICATOR:

Use as a resonance indicator an output meter connected across the primary of the speaker input transformer, or by means of an adapter between the plate and screen terminals of the type 6F6-G output tube. Maximum deflection of the meter indicates resonance. Use only enough signal to get a readily readable output. A low range output meter or the low scale of a multi-range meter should be used.

DUMMY ANTENNAS:

The following dummy antennas are used in aligning and are referred to in the following alignment instructions as "Dummy 1," "Dummy 2," and "Dummy 3."

Dummy 1: (I.F.)—Consists of a .1 mfd. condenser connected in series with the external oscillator.

Dummy 2: (Broadcast)—Consists of a 200 mmfd. condenser and a 20 ohm resistor connected in series with each other and in series with the external oscillator.

Dummy 3: (Short Wave)—Consists of a .1 mfd. condenser and a 400 ohm resistor connected in series with each other and in series with the external oscillator.

ALIGNING I.F. TRANSFORMERS: (465 K.C.):

Part No. 108-76A Output I.F. Transformer
Part No. 108-75A Input I.F. Transformer.

These I.F. transformers have two adjustments, both of which are accessible from the top of chassis (see top view).

1. With volume control full on (the extreme right of its rotation), the band changing switch in the broadcast position, (extreme left of its rotation), and with the variable condenser set to approximately 1400 kilocycles, make the following adjustments:
   (a) Connect external oscillator set at 465 kilocycles, in series with "Dummy 1," to the control grid cap of the type 6K7 tube, and adjust the output I.F. transformer (No. 108-76A) to resonance.
   (b) With "Dummy 1" still connected, move oscillator output clip from grid of 6K7 to grid cap to 6A8 and adjust input I.F transformer (No. 108-75A) to resonance.
   (c) With oscillator still connected to 6A8, readjust output I.F. transformer (108-76A) if necessary.

BROADCAST AND SHORT WAVE BAND ALIGNMENT

Broadcast Band:—535 to 1720 Kilocycles.
Short Wave Band:—2280 to 6600 Kilocycles.

Important:—These adjustments must be made in the following order:

SHORT WAVE OSCILLATOR ADJUSTMENT:

1. With band switch in the short wave band position, extreme right of its rotation, and with the gang condenser in its minimum capacity position, plates entirely out of mesh, and with the external oscillator connected in series with "Dummy 1" to grid cap of the 6A8 tube, make the following adjustment:
   (a) Set external oscillator to 6.6 megacycles and adjust short wave oscillator trimmer to resonance. This adjustment is marked "S.W Osc." (see top view of chassis, Fig. 1, for location of this adjustment).

NOTE: Make certain that the fundamental 6.6 megacycles signal has been tuned in and not the image frequency, noting that the image appears when the tuning knob is moved to approximately 5.7 megacycles.

BROADCAST BAND OSCILLATOR ADJUSTMENT:

1. With band switch in the broadcast position, extreme left of its rotation, and with the gang condenser in its minimum capacity position, plates entirely out of mesh, and with external oscillator connected in series with "Dummy 1" to grid cap of the 6A8 tube, make the following adjustment:
   (a) Set external oscillator to 1720 K.C. and adjust broadcast oscillator trimmer to resonance. This adjustment is the trimmer mounted on the front section of the variable gang condenser.

BROADCAST BAND ANTENNA ADJUSTMENT:

1. With the band switch still in the broadcast position, move the external oscillator from the grid cap of the 6A8 tube to the tan antenna lead and black ground lead, in series with "Dummy 2" and make the following adjustments:
   (a) Set external oscillator to 1550 K.C., rotate variable gang condenser and pick up signal. Adjust broadcast antenna trimmer to resonance. This adjustment is marked "B.C. Ant." (See top view of chassis, Fig. 1, for location of this adjustment.)
   (b) Re-set external oscillator to 600 K.C. and adjust broadcast series pad to resonance by rotating condenser to approximately 600 K.C., rocking it slowly to and fro until, by adjusting series pad, maximum output is attained. This adjustment is located on the top of the chassis directly in front of the antenna coil. (See top view of chassis, Fig. 1).
   (c) Repeat adjustments "a" and "b" until sensitivity is at its maximum.

SHORT WAVE BAND ANTENNA ADJUSTMENT:

1. With the band switch in the short wave position, and with external oscillator connected in series with "Dummy 3," to the tan antenna lead and black ground lead, make following adjustment:
   (a) Set external oscillator to 6 megacycles and adjust the short-wave antenna trimmer to resonance. This adjustment is the trimmer mounted on the rear section of the variable gang condenser.

©John F. Rider

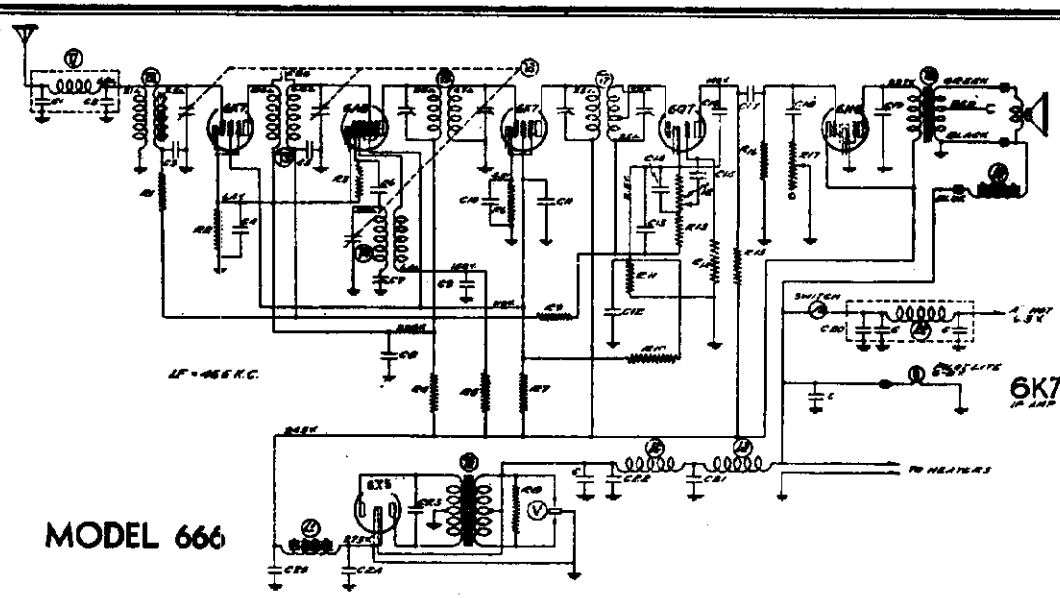

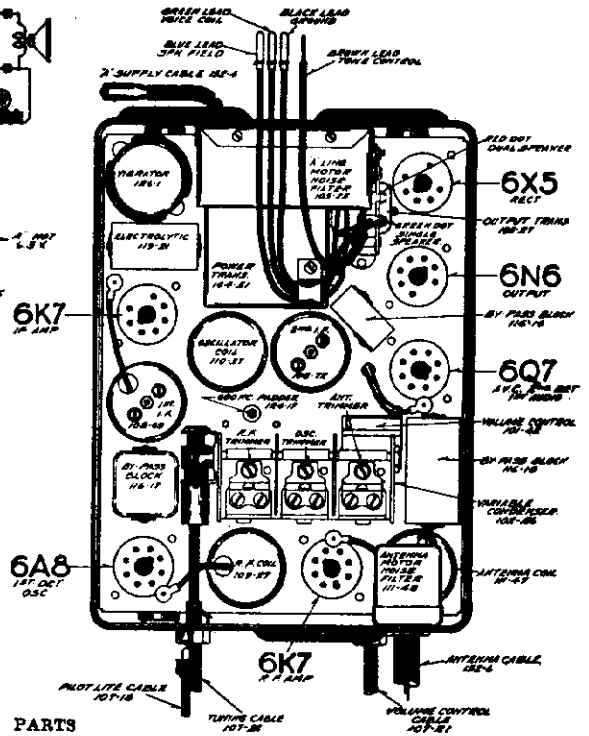

No.	Part No.	Description
		RESISTORS
R1	130-20	100M Ohm - ⅛ Watt 20% - 50 Volt - Carbon
R2	130-99	300 Ohm - ½ Watt - 20% - 10 Volt - Carbon
R3	130-94	50M Ohm - ½ Watt - 10% - 10 Volt - Carbon
R4	130-98	1500 Ohm - ½ Watt 20% - 25 Volt - Carbon
R5	130-42	20M Ohm - ½ Watt - 20% - 100 Volt - Carbon
R6	130-70	500 Ohm - ½ Watt - 10% - 10 Volt - Carbon
R7	130-95	12M Ohm - 1.2 Watt - 10% - 100 Volt - Carbon
R8	130-97	200 Ohm - ½ Watt - 10% - 10 Volt - Carbon
R9	130-8	500M Ohm - ⅛ Watt - 20% - 100 Volt - Carbon
R10	130-108	40M Ohm - ½ Watt - 10% - 100 Volt - Carbon
R11	130-107	800 Ohm - ½ Watt - 10% - 10 Volt - Carbon
R12	101-42	50M Ohm - Volume Control and Switch
R13	130-22	5M Ohm - ⅛ Watt - 20% -10 Volt - Carbon
R14	130-88	1 Meg Ohm - ⅛ Watt - 10% - 20 Volt - Carbon
R15	130-9	200M Ohm - ⅛ Watt - 20% - 20 Volt - Carbon
R16	130-3	500M Ohm - ½ Watt - 20% - 100 Volt - Carbon
R17	101-45	1 Meg Ohm - Tone Control

		CONDENSERS
C		Spark Plate
C1	129-3	.00002 Mica - "O" - 20%
C2	129-49	.00009 Mica - "O" - 5%
C3	116-18	.05 x 200 Volt
C4	116-18	.25 x 200 Volt
C5	116-17	.05 x 200 Volt
C6	129-21	.0002 Mica - MT - "O" - 20%
C7	124-17	Single Padder J-4-S
C8	116-17	.1 x 400 Volt
C9	116-18	.1 x 400 Volt
C10	116-17	.1 x 200 Volt
C11	116-17	.1 x 200 Volt
C12	116-16	.05 x 200 Volt
C13	129-5	.0001 Mica - MT - "O" - 20%
C14	129-2	.0005 Mica - MT - "O" - 20%
C15	116-18	.02 x 200 Volt
C16	129-5	.0001 Mica - MT - "O" - 20%
C17	116-16	.05 x 400 Volt
C18	100-37	.003 x 600 Volt - 10%
C19	116-16	.01 x 800 Volt
C20	100-35	.5 x 200 Volt - 50% - 10%
C21	100-35	.5 x 200 Volt - 50% - 10%
C22	100-35	.5 x 200 Volt - 50% - 10%
C23	100-36	.01 x 1400 Volt - 10%
C24	119-21	8.0 mfd. Lytic Cond. 350 Working Volts
C25	119-21	4.0 mfd. Lytic Cond. 350 Working Volts

PARTS

T1	111-48	Antenna Filter Coil Assembly
T2	111-47	Antenna Coil Assembly
T3	109-27	R.F. Coil Assembly
T4	110-37	Oscillator Coil Assembly
T5	108-69	Input I.F. Coil—465 Kc.
T6	102-26	Three Gang Variable Condenser
T7	108-72	Output I.F. Coil—465 Kc.
T8	105-27	Output Transformer
T9	104-51	Power Transformer
L1	105-23	Filter Choke
L2	105-19	"A" Choke
L3	105-24	"A" Choke
L4	105-26	"A" Choke
L5	114-34	5¼" Speaker (Field Resistance—4 Ohms)
V	126-1	Vibrator

C3, C4, C9, C15, in one unit—part No. 116-18.
C5, C8, C10, C11, in one unit—part No. 116-17.
C12, C17, C19, in one unit—part No. 116-16.

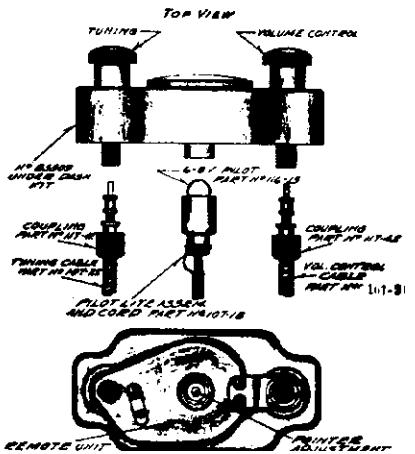

MODEL 666
Alignment, Notes

BELMONT RADIO CORP.

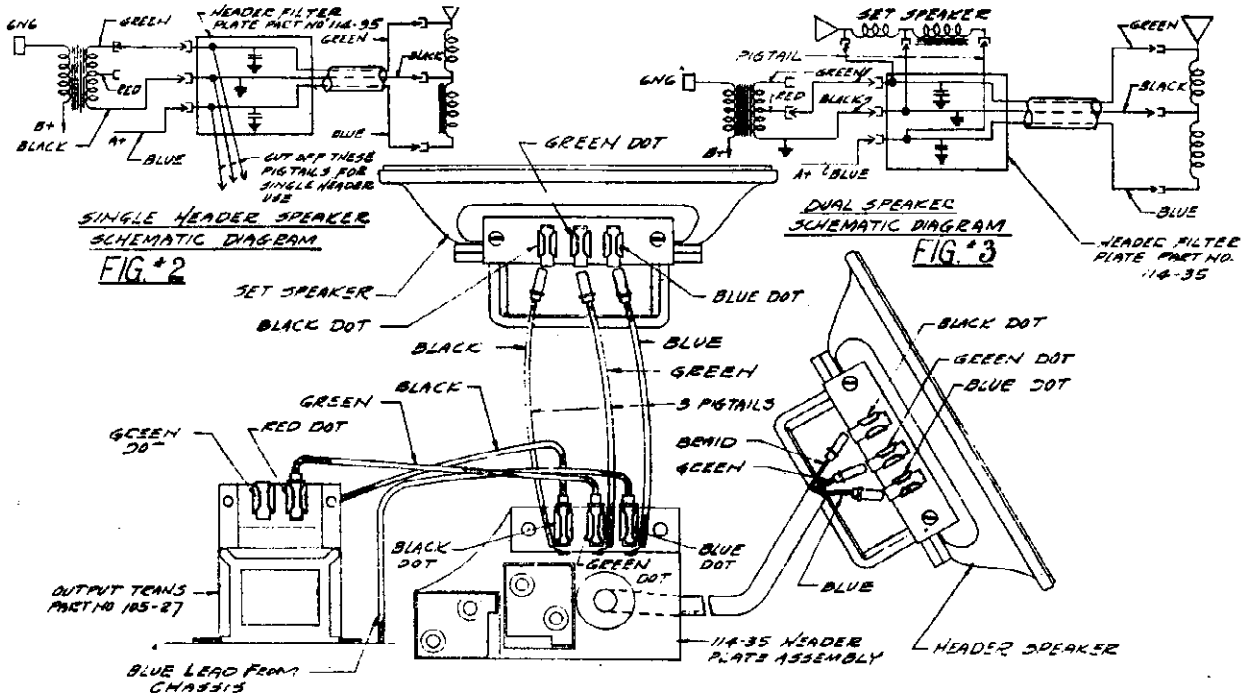

NO SPARK PLUG SUPPRESSORS ARE REQUIRED

DESCRIPTION:

Model No. 666 is a six-tube superheterodyne receiver having a tuning range of 530 K.C. to 1550 K.C., operates from a 6.0 volt storage battery and uses the automotive type 6.3 volt tubes. The "B" supply is obtained from a vibrator with a tube rectifier.

The I.F. frequency used is 465 K.C., the R.F. end of the receiver consisting of a high gain iron core antenna coil which gives high signal to noise ratio and an R.F. stage especially designed to give high image rejection and high I.F. attenuation. The I.F. transformers are designed to give high gain and selectivity and yet to have a broad nose for ease of tuning and hi-fidelity response. They are of the air core type and wound with solid wire to give *minimum* drift and variation of gain due to climatic changes.

The receiver is so designed that it may be used as either a single or two unit installation. Taps are provided on the output transformer to a pin jack terminal board, a red dot distinguishing dual speaker tap and green dot for single speaker operation.

For complete details see illustration and Header speaker data chart.

Dash kits for the remote control head are available for 1936 cars drilled for dash plates.

This receiver has been carefully designed to facilitate servicing, the top and bottom covers are both removable and are fastened in place by spring clips, self tapping screws and trimount buttons.

All adjustments are accessible and any part replaceable without removing the chassis from the case.

TUBE COMPLEMENT

1—Type No. 6K7—Remote Cut-off Pentode as an R.F. Amplifier
1—Type No. 6A8—Pentagrid Converter (composite first detector and oscillator)
1—Type No. 6K7—Remote Cut-off Pentode as an I.F. Amplifier (465 K.C.)
1—Type No. 6Q7—Duplex Diode Triode Second Detector, A.V.C. and First Audio
1—Type No. 6N6—Twin Triode Output Amplifier
1—Type No. 6X5—High Vacuum Rectifier

The tube complement consists of the latest "Metal-Glass" tubes which are interchangeable with metal tubes.

Cars with floating power must have the motor bonded to the bulkhead and again to the frame to provide a direct path for the high frequency interference developed in the ignition system. ⅝" copper braid will be necessary, SMALL DIAMETER WIRE WILL NOT DO. Bond flexible shaft leads, such as free wheeling, choke wires, etc., which pick up motor noise and reradiate it into the car. Free wheeling cables should be grounded at the point at which they go through the fire wall of the car. In extreme cases it has been found necessary to ground the steering column.

I.F. ALIGNMENT

1. With variable condenser in its minimum capacity position (plates entirely out of mesh) and with volume control full on, connect test oscillator set at 465 K.C. in series with I.F. dummy antenna, to grid of 6K7 I.F. tube.
2. Adjust trimmer condensers of output I.F. transformer No. 108-72 to resonance with oscillator.
3. Move test oscillator connection to grid of 6A8 tube and adjust trimmer condensers of input I.F. transformer No. 108-69 to resonance with oscillator. See top view for location of these transformers. There are two adjustments on each and they are accessible from the top of the transformer shield and should be adjusted with an insulated screw driver.

BROADCAST ALIGNMENT

1. With variable condenser in its minimum capacity position, connect test oscillator set at 1550 K.C. in series with broadcast dummy to the antenna lead of receiver.
2. Adjust oscillator trimmer of variable condenser to resonance. (This adjustment is on the middle section of the three-gang condenser—see top view).
3. Shift test oscillator to 1400 K.C. and pick up signal by rotating condenser and adjust R.F. and antenna trimmers to resonance (see top view).
4. Re-set test oscillator to 600 K.C. and rotate variable condenser to 600 KC. Adjust series pad rocking gang condenser to and fro at the same time adjusting series pad for maximum gain. This adjustment is accessible from the top of chassis (see top view.
5. Go back and check 1400 K.C. If adjustment is made here, check 600 K.C. again.
6. Check for sensitivity at 1000 K.C. by setting test oscillator to this frequency and picking up the signal by rotating variable condenser. Under no circumstances bend plates of variable condenser sections to correct tracking.

Make certain that the instrument panel has a ground connection to the frame of the car.

NOTE—Where ignition coils are mounted in motor compartments a .5 mfd cond (148-1 or 148-3) connected between primary coil terminal and receiver mounting bolt will often reduce motor noise.

BELMONT RADIO CORP.

MODELS 685, Series A
686, Series A & B
786, Series A
Schematic, Socket, Trimmer

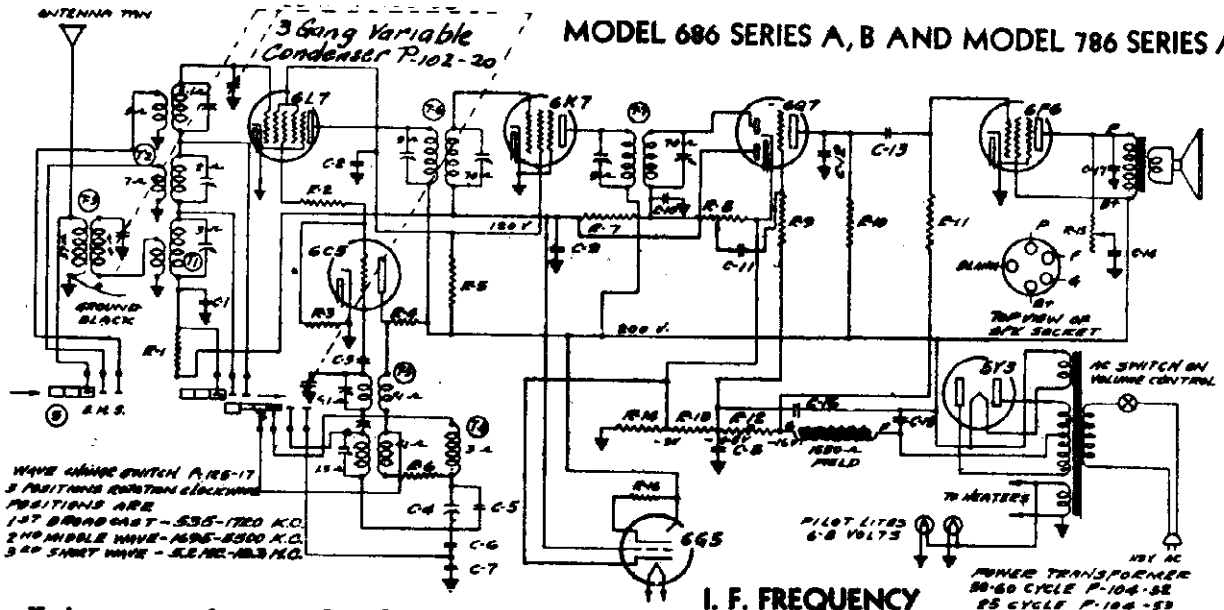

MODEL 686 SERIES A, B AND MODEL 786 SERIES A

See Note on next page for Model 685, Series A

I. F. FREQUENCY 465 K. C.

POWER TRANSFORMER
50-60 CYCLE P-104-52
25 CYCLE P-104-53
UNIVERSAL 25 CYCLE P-104-54
UNIVERSAL 40 CYCLE P-104-55

No.	Part No.	Description
		RESISTORS
R1	130-20	100M Ohm—⅛ Watt—20%—50 Volt—Carbon
R2	130-105	150 Ohm—½ Watt—20%—10 Volt—Carbon
R3	130-12	50M Ohm—⅛ Watt—20%—10 Volt—Carbon
R4	130-104	9M Ohm—1 Watt—20%—100 Volt—Carbon
R5	130-104	9M Ohm—1 Watt—20%—100 Volt—Carbon
R6	130-27	50 Ohm—⅛ Watt—20%—3 Volt—Carbon
R7	130-18	1 Meg Ohm—⅛ Watt—20%—100 Volt—Carbon
R8	101-46	1 Meg Ohm—Volume Control
R9	130-4	3 Meg Ohm—⅛ Watt—20%—100 Volt—Carbon
R10	130-108	100M Ohm—⅛ Watt—20%—50 Volt—Carbon
R11	130-102	500M Ohm—⅛ Watt—10%—50 Volt—Carbon
R12, R13, R14	106-26	220 Ohm, 32 Ohm, 52 Ohm
R15	101-58	50M Ohm—Tone Control
R16	130-110	1 Meg Ohm—1/10 Watt—10%—100 Volt—Carbon
		CONDENSERS
C1	100-22	.05 x 200 Volt—25%
C2	100-20	.1 x 200 Volt—25%
C3	129-30	.00005 Mica (MT—0)—20%
C4	124-28	Series Pad (80—225)
C5	129-56	.00055 Mica (MT—0)—10%
C6	129-55	.0034 Mica (MW—W)—2½%
C7	129-54	.003 Mica (MW—W)—2½%
C8	100-20	.1 x 200 Volt—25%
C9	100-22	.05 x 200 Volt—25%
C10	129-12	.00025 Mica (MT—0)—20%
C11	100-11	.01 x 400 Volt—25%
C12	129-2	.0005 Mica (MT—0)—20%
C13	100-11	.01 x 400 Volt—25%
C14	100-27	.025 x 600 Volt—25%
C15	103-6	8 Mfd. x 350 Volt Electrolytic
C16	103-7	8 Mfd. x 300 Volt Electrolytic
C17	100-25	.002 x 600 Volt—20%
		PARTS
T1	111-49	Broadcast Antenna Coil
T2	111-50	S.W.—M.W. Antenna Coil
T3	111-51	B.C.—Pre-Selector Coil Assem.
T4	110-38	B.C. Oscillator Coil
T5	110-39	S.W.—M.W. Oscillator Coil
T6	106-74	Input I.F.—465 K.C.
T7	106-73	Output I.F.—465 K.C.
S	125-17	Band Switch

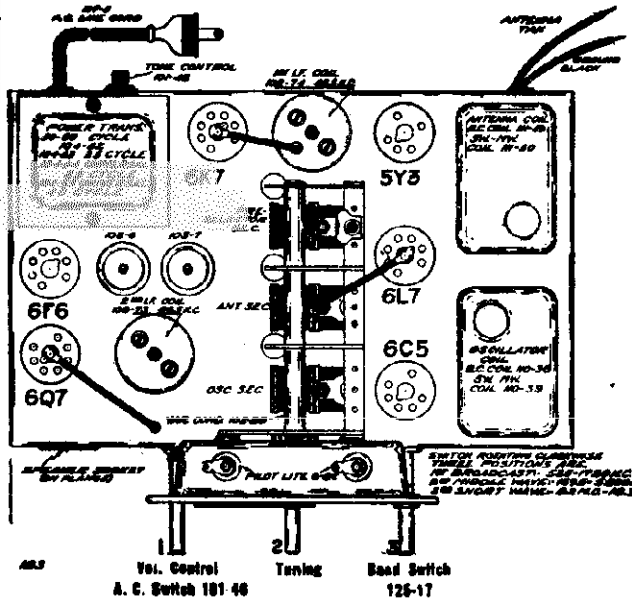

MODEL 686 SERIES A

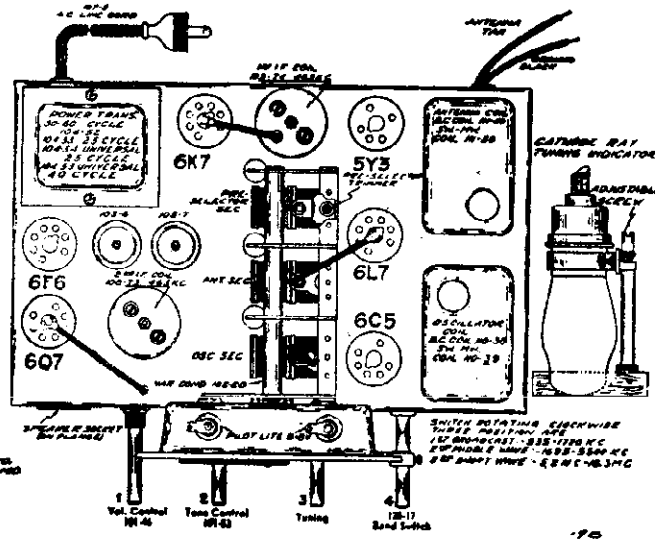

MODELS 686 SERIES B AND 786 SERIES A

©John F. Rider, Publisher

©John F. Rider

DESCRIPTION

Model 686 is a six tube A.C. all wave superheterodyne receiver. It has a tuning range of 535 K.C. to 18.3 megacycles in three bands, and is characterized by its exceptional stability, and by a sensitivity both high and uniform, with high signal to noise ratio on all bands. The I.F. frequency used is 465 K.C., which in conjunction with the pre-selector circuit, gives high image and I.F. attenuation (freedom from whistles and telegraphic interference).

A separate oscillator; effective automatic volume control; broad nose sharp skirt selectivity and new type oval airplane dial, are a few of the outstanding features of this model.

NOTE:

Model 686 series "A" chassis are equipped with a tone control (No. 101-48) which is mounted on the rear flange of the chassis, and has three controls on the front of the chassis, namely, "Volume Control and Switch;" "Tuning Control;" and "Band Switch."

Model 686 series "B" chassis differs only from series "A" in that the tone control is removed from the rear flange of the chassis and mounted on the front. Series "B" chassis has four controls, namely, "Volume Control and Switch," "Tone Control," "Tuning Control," and "Band Switch."

Model 786 series "A" chassis is the same as model 686 series "B" except that the "Cathode-Ray Tuning Indicator" has been added.

Model 685 is the same chassis as model 686 series "A" except that it has no tone control and the tube complement consists of two metal and four glass tubes. The alignment procedure is the same for all models, and the circuit diagram differs only in that the tone control and cathode-ray tuning indicator is omitted on the model 685, and the cathode-ray tuning indicator only is omitted on the model 686. The tube complement of the model 685 differs, however, circuit constants and values of resistors and condensers are the same in all models.

Transformers are available and chassis are sometimes equipped with universal transformers for operation on 25, 40, and 60 cycles and with primary taps for 105, 125, 150, 220 and 250 volts (see instructions), and also sometimes equipped with 25 cycle transformers with 105-115 volt or 220 volt primaries, not universals.

TUBE COMPLEMENT

The tube complement of the model 686 and model 786 consists of the latest "Metal-Glass" tubes which are interchangeable with metal tubes. They are as follows:

1-Type 6L7 Pentagrid Mixer, First Detector.
1-Type 6C5 Oscillator.
1-Type 6K7 Remote Cut-off Pentode, I.F. Amplifier (465 K.C.).
1-Type 6Q7 Duplex Diode Triode Second Detector, A.V.C. and First Audio.
1-Type 6F6 Pentode Output Amplifier.
1-Type 5Y3 or 5W4 High Vacuum Rectifier. (Note: 5Y3 available in "Metal-Glass" only.)
1-Type 6G5 Cathode-Ray Tuning Indicator. (Note: 6G5 available in all glass only, and only with model 786.)

The tube complement of the model 685 is as follows:

1-Type 6L7 Pentagrid Mixer, First Detector.
1-Type 6C5 Oscillator.
1-Type 6K7G Remote Cut-off Pentode, I.F. Amplifier (465 K.C.).
1-Type 6Q7G Duplex Diode Triode Second Detector, A.V.C. and First Audio.
1-Type 6F6G Pentode Output Amplifier.
1-Type 5Y3 High Vacuum Rectifier.

SERVICE NOTES:

Voltages taken from different points of circuit to chassis are measured with volume control full on, all tubes in their sockets and speaker connected, with a volt meter having a resistance of 1000 ohms per volt.

All voltages as indicated on diagram are measured with 119 volts on the primary of the power transformer.

Resistances of coil windings are indicated in ohms on the schematic circuit diagram.

To check for open by-pass condensers, shunt each condenser with another condenser of the same capacity and voltage rating, which is known to be good, until the defective unit is located.

Excessive hum, stuttering, low volume and a reduction in all D.C. voltages is usually caused by a shorted electrolytic condenser; open by-pass condensers frequently cause oscillation and distorted tone.

ALIGNING INSTRUCTIONS:

CAUTION:—No aligning adjustments should be attempted without first thoroughly checking over all other possible causes of trouble, such as poor installations, open or grounded antenna systems, low line voltages, defective tubes, condensers and resistors. In order to properly align this chassis, an oscillator (generator) is absolutely necessary. No aligning adjustments should be attempted with the chassis in the cabinet. Remove the knobs and the four bolts which are used to fasten the chassis.

All adjustments should be made with a non-metallic screw driver.

DUMMY ANTENNAS:

The following dummy antennas are used in aligning and are referred to in the following alignment instructions as "Dummy 1," "Dummy 2," and "Dummy 3."

Dummy 1: (I.F.)—Consists of a .1 mfd. condenser connected in series with the external oscillator.

Dummy 2: (Broadcast)—Consists of a 200 mmfd. condenser and a 20 ohm resistor connected in series with each other and in series with the external oscillator.

Dummy 3: (Middle and Short Wave)—Consists of a .1 mfd. condenser and a 400 ohm resistor connected in series with each other and in series with the external oscillator.

RESONANCE INDICATOR:

Use as a resonance indicator an output meter connected across the primary of the speaker input transformer, or by means of an adapter between the plate and screen terminals of the type 6F6 output tube. Maximum deflection of the meter indicates resonance. Use only enough signal to get a readily readable output. A low range output meter or the low scale of a multi-range meter should be used.

ALIGNING I.F. TRANSFORMERS; (465 K.C.):

Part No. 108-73 Output I.F. Transformer.
Part No. 108-74 Input I.F. Transformer.

These I.F. transformers have two adjustments, both of which are accessible from the top of chassis (see top view).

1. With volume control full on (the extreme right of its rotation), the band changing switch in the broadcast position, (extreme left of its rotation), and with the variable condenser set to approximately 1400 kilocycles, make the following adjustments:
   (a) Connect external oscillator set at 465 kilocycles, in series with "Dummy 1," to the control grid cap of the type 6K7 tube, and adjust the output I.F. transformer (No. 108-73) to resonance.
   (b) With "Dummy 1" still connected, move oscillator output clip from grid of 6K7 to grid cap to 6L7 and adjust input I.F. transformer (No. 108-74) to resonance.
   (c) With oscillator still connected to 6L7, readjust output I.F. transformer (108-73) if necessary.

ALIGNMENT PROCEDURE

The following adjustments to be made after the I.F.'s have been aligned as explained above.

Model 685 Series A Model 686 Series A & B
Model 786 Series A

BROADCAST BAND ALIGNMENT:

535 to 1720 Kilocycles

1. With band changing switch in the broadcast position, extreme left of its rotation, and with gang condenser in its minimum capacity position, plates entirely out of mesh, and with external oscillator connected in series with "Dummy 2" to tan antenna lead and black ground lead, make following adjustments:
   (a) Set external oscillator to 1720 K.C. and adjust broadcast oscillator trimmer to resonance (adjustment number 1; see bottom view of coil assembly. Fig. 3.)
   (b) Re-set external oscillator to 1550 K.C., rotate variable gang condenser and pick up signal. Adjust broadcast antenna trimmer (Adjustment number 4) to resonance; also adjust preselector trimmer which is mounted on the top of the rear section of the three gang variable tuning condenser to resonance. (See top view of chassis, Fig. 1, for location of this adjustment.)
   (c) Re-set external oscillator to 600 K.C., and adjust broadcast series pad to resonance by rotating condenser to approximately 600 K.C., rocking it slowly to and fro until by adjusting series pad maximum output is attained. This adjustment is located on the bottom of the chassis directly under the variable gang condenser. (See bottom view of chassis, Fig. 3.)
   (d) Repeat adjustments "a" and "b" until sensitivity is at its maximum.
   (e) Check for tracking and sensitivity at 1000 kilocycles. Under no circumstances bend plates of variable condenser sections to correct tracking.

SHORT WAVE BAND ALIGNMENT:

5.2 to 18.3 Megacycles

1. With band changing switch in the short wave position, extreme right of its rotation, and with external oscillator set at 17 megacycles and connected in series with "Dummy 3" to the tan antenna and black ground lead, make the following adjustments:
   (a) Move dial pointer to 17 megacycles and adjust short wave oscillator (Adjustment number 3) and short wave antenna (Adjustment number 6) to resonance.
   (b) Re-set external oscillator to 6 megacycles and pick up signal by rotating variable condenser and check sensitivity.
   (c) Re-set external oscillator and check set at 18.1 megacycles and 5.3 megacycles for band coverage.

NOTE: It is extremely necessary in making all of these adjustments that the fundamental oscillator signal be tuned in and not the image frequency which will fall below the fundamental. An example of this is an image of a fundamental 18.3 megacycle signal appears near 17.4 megacycles.

MIDDLE WAVE BAND ALIGNMENT:

1665 to 5500 Kilocycles

1. With band changing switch in the middle wave position, center of its rotation, and with external oscillator set at 5000 kilocycles and connected in series with "Dummy 3" to the tan antenna and black ground lead, make the following adjustments:
   (a) Move dial pointer to 5000 kilocycles and adjust middle wave oscillator (Adjustment number 2) and middle wave antenna (Adjustment number 5) to resonance.
   (b) Re-set external oscillator to 1800 kilocycles and pick up signal by rotating variable condenser and check sensitivity.
   (c) Re-set external oscillator and check set at 5400 kilocycles and 1700 kilocycles for band coverage.

©John F. Rider

BELMONT RADIO CORP.

MODEL 746, Series A
Schematic, Socket Trimmers, Voltage

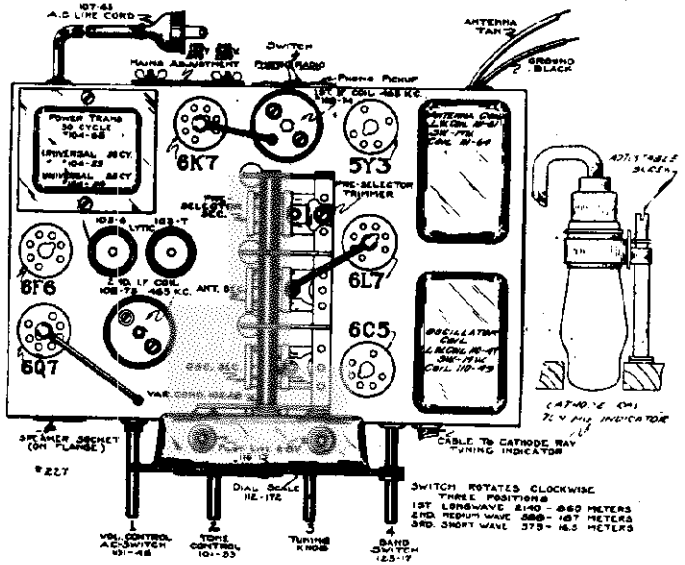

TOP VIEW—FIG. 1

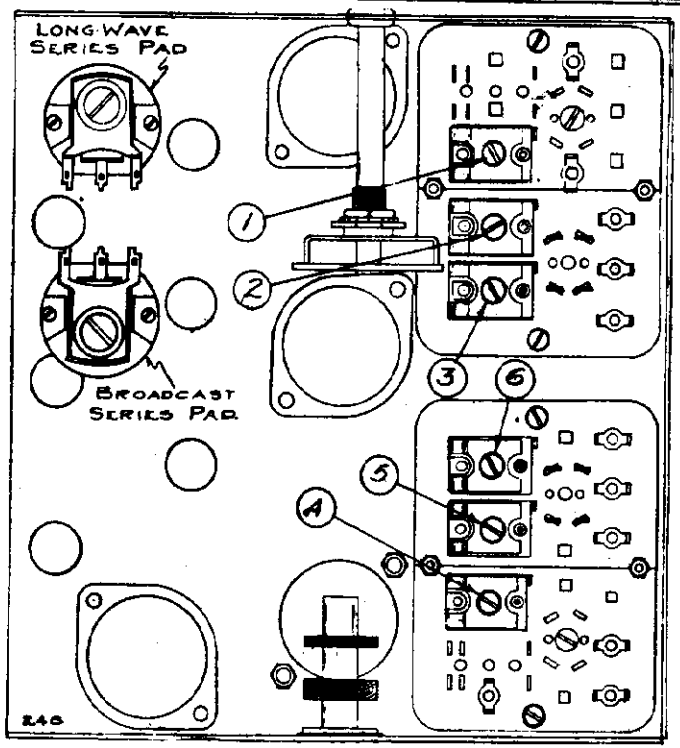

MODEL 746 SERIES A

I. F. FREQUENCY
465 K. C. (645.1 Meters)

TUNING RANGE—

Long Wave Band
860-2150 Meters
350-140 Kilocycles

Medium Wave Band
187-555 Meters
1600-540 Kilocycles

Short Wave Band
16.5-56.5 Meters
18.2-5.3 Megacycles

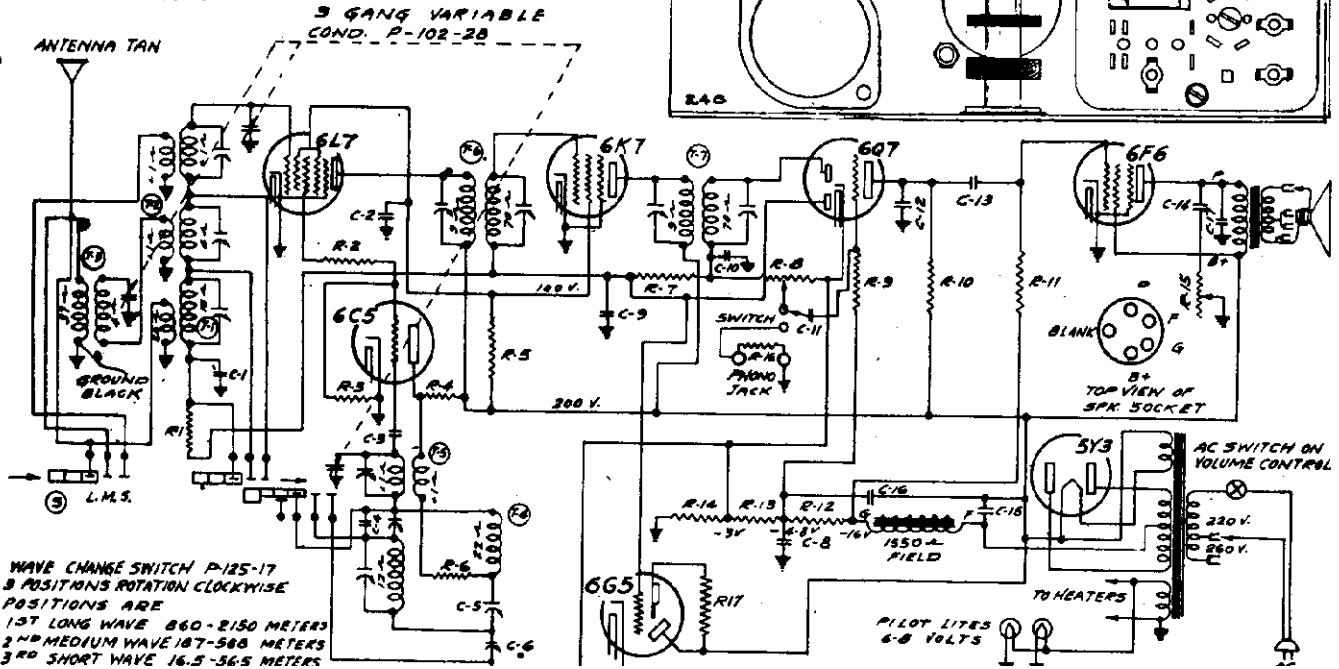

POWER TRANSFORMER
50-CYCLE 220-260 V. P.P.
P-104-65
UNIVERSAL 25-CYCLE
P-104-54
UNIVERSAL 50 CYCLE
P-104-55

WAVE CHANGE SWITCH P-125-17
3 POSITIONS ROTATION CLOCKWISE
POSITIONS ARE
1ST LONG WAVE 860-2150 METERS
2ND MEDIUM WAVE 187-588 METERS
3RD SHORT WAVE 16.5-56.5 METERS

MODEL 746, Series A
Alignment, Parts

BELMONT RADIO CORP.

Model 746 - Series A

7-Tube Including Cathode-Ray Tuning Indicator 3-Band A. C. Superheterodyne Receiver

190-280 Volts 50 Cycles A. C.

POWER SUPPLY:

This receiver is normally supplied with a transformer for operation on 50 cycles (may be higher in frequency, not lower) and with a primary designed for operation on 190-280 volts.

Mains transformer is provided with two taps, one for voltages 190-240 volts another for voltages 240-280 volts. These taps are accessible upon removing plate fastened with two wing nuts to back of chassis.

Transformers are available and chassis are sometimes equipped with universal transformers for operation on 25 and 50 cycles and with primary taps for 108, 127, 150, 225 and 260 volts (see illustrations).

Should the receiver be equipped with a special transformer, connect primary tap on voltage terminal which corresponds as nearly as possible to the actual mains voltage.

SERVICE NOTES

Voltages taken from different points of circuit to chassis are measured with volume control full on, all tubes in their sockets and speaker connected, with a volt meter having a resistance of 1000 ohms per volt. These voltages are clearly indicated on the circuit diagram.

IN ORDER TO PREVENT SIGNAL FROM ACTING UPON AVC AND AFFECTING ACCURACY OF VOLTAGE MEASUREMENTS, AERIAL AND GROUND LEADS SHOULD BE SHORT CIRCUITED WHILE MAKING MEASUREMENTS.

All voltages are to be measured with 220 volts on the primary of the power transformer.

With special transformers select primary tap nearest to actual mains voltage at time voltage measurements are to be made.

Resistances of coils and transformer windings are indicated in ohms on schematic circuit diagrams.

To check for open by-pass condensers, shunt each condenser with another condenser of the same capacity and voltage rating, which is known to be good, until the defective unit is located.

Excessive hum, stuttering, low volume and a reduction in all D.C. voltages is usually caused by a shorted electrolytic condenser, open by-pass condensers frequently cause oscillation and distorted tone.

ALIGNING INSTRUCTIONS
Dummy Antennas

The following dummy antennas are used in aligning the receiver, and are referred to in the following alignment instructions as "Dummy 1", "Dummy 2", and "Dummy 3".

Dummy 1: (I.F.)—Consists of a .1 mfd. condenser connected in series with the external oscillator.

Dummy 2: (Broadcast and long wave)—Consists of a 200 mmfd. condenser and a 20 ohm resistor connected in series with each other and in series with the external oscillator.

Dummy 3: (Short Wave)—Consists of a .1 mfd. condenser and a 400 ohm resistor connected in series with each other and in series with the external oscillator.

TEST FREQUENCIES USED

	Kilocycles	Meters
I. F.	465	645.1
Long Wave	150	2000
	350	860
	325	925
Broadcast	600	500
	1400	214
	1600	187
Short Wave	6000	50.0
	17000	17.6
	18200	16.5

Resonance Indicator:

Use as a resonance indicator an output meter connected across the primary of the speaker input transformer, or by means of an adapter between the plate and screen terminals of the type 6F6 output tube. Maximum deflection of the meter indicates resonance. Use only enough signal to get a readily readable output. A low range output meter or the low scale of a multi-range meter should be used

CAUTION:

No aligning adjustments should be attempted without first thoroughly checking over all other possible causes of trouble, such as poor installations, open or grounded antenna systems, low line voltages, defective tubes, condensers and resistors. In order to properly align this chassis, an oscillator (generator) is absolutely necessary. No aligning adjustments should be attempted with the chassis in the cabinet. To remove the knobs, pull them off and to take the chassis out of the cabinet, remove the four bolts by which it is fastened.

ALIGNING I.F. TRANSFORMERS
(465 K.C.) (645.1 Meters)

Part No. 108-73 Output I.F Transformer.
Part No. 108-74 Input I.F. Transformer.

These I.F. transformers have two adjustments, both of which are accessible from the top of chassis (see top view).

1. With volume control full on (the extreme right of its rotation), the band changing switch in the broadcast position, (center of its rotation), and with the variable condenser set to approximately 1400 kilocycles, make the following adjustments:

(a) Connect external oscillator set at 465 kilocycles, in series with "Dummy 1," to the control grid cap of the type 6K7 tube, and adjust the output I.F. transformer (No. 108-73) to resonance.

(b) With "Dummy 1" still connected, move oscillator output clip from grid of 6K7 to grid cap to 6L7 and adjust input I.F. transformer (No. 108-74) to resonance.

(c) With oscillator still connected to 6L7, readjust output I.F. transformer (108-73) if necessary.

ALIGNMENT PROCEDURE

The following adjustments to be made after the I.F.'s ave been aligned as explained above.

SHORT WAVE BAND ALIGNMENT:
16.5 Meters (18.2 Mc.) to 56.5 Meters (5.3 Mc.)

With band changing switch in the short wave position, extreme right of its rotation, and with the gang condenser in its minimum capacity position, plates entirely out of mesh, and with external oscillator connected in series with "Dummy 3" to the tan antenna and black ground lead, make the following adjustments.

(a) Set external oscillator to 16.5 meters (18.2 Mc.) and adjust short wave oscillator trimmer (adjustment number 3, see Fig. 2) to resonance.

(b) Re-set external oscillator to 17.6 meters (17.0 Mc.) and pick up signal by rotating gang condenser. Adjust short wave antenna trimmer (adjustment number 6) to resonance.

(c) Re-set external oscillator to 50 meters (6.0 Mc.) and check for sensitivity.

NOTE: It is extremely necessary in making all of these adjustments that the fundamental oscillator signal be tuned in and not the image frequency which will fall below the fundamental. An example of this is an image of a fundamental 18.3 megacycle signal appears near 17.4 megacycles.

MEDIUM OR BROADCAST BAND ALIGNMENT:
588 Meters (510 K.C.) to 187 Meters (1600 K.C.)

With band changing switch in the medium wave position, center of its rotation, and with gang condenser in its minimum capacity position, plates entirely out of mesh, and with external oscillator connected in series with "Dummy 2" to tan antenna lead and black ground lead, make following adjustments:

(a) Set external oscillator to 187 meters (1600 K.C.) and adjust medium wave oscillator trimmer to resonance (adjustment number 2; see bottom view of coil assembly. Fig. 2.).

(b) Re-set external oscillator to 214 meters (1400 K.C.), rotate variable gang condenser and pick up signal. Adjust medium wave antenna trimmer (Adjustment number 5) to resonance; also adjust preselector trimmer which is mounted on the top of the rear section of the three gang variable tuning condenser to resonance. (See top view of chassis, Fig. 1, for location of this adjustment.)

(c) Re-set external oscillator to 500 meters (600 K.C.), and adjust medium wave series pad to resonance by rotating condenser to approximately 600 K.C., rocking it slowly to and fro until by adjusting series pad maximum output is attained. This adjustment is located on the bottom of the chassis directly under the variable gang condenser. (See bottom view of chassis, Fig. 2.)

(d) Repeat adjustments "a" and "b" until sensitivity is at its maximum.

(e) Check for tracking and sensitivity at 300 meters (1000 K.C.) Under no circumstances bend plates of variable condenser sections to correct tracking.

IMPORTANT: This band must be completely rechecked after the long wave band has been adjusted.

LONG WAVE BAND ALIGNMENT:
860 Meters (350 K.C.) to 2150 Meters (140 K.C.)

With band changing switch in the long wave position, extreme left of its rotation, and with gang condenser in its minimum capacity position, plates entirely out of mesh, and with external oscillator connected in series with "Dummy 2" to tan antenna lead and black ground lead, make following adjustments:

(a) Set external oscillator to 860 meters (350 K.C.), and adjust long wave oscillator trimmer to resonance (adjustment number 1; see bottom view of coil assembly. Fig. 2.)

(b) Re-set external oscillator to 925 meters (325 K.C.), rotate variable gang condenser and pick up signal. Adjust long wave antenna trimmer (Adjustment number 4) to resonance.

(c) Re-set external oscillator to 2000 meters (150 K.C.), and adjust long wave series pad to resonance by rotating condenser to approximately 2000 meters, rocking it slowly to and fro until by adjusting series pad maximum output is attained. This adjustment is located on the bottom of the chassis directly under the variable gang condenser. (See bottom view of chassis, Fig. 2.)

(d) Repeat adjustments "a" and "b" until sensitivity is at its maximum

IMPORTANT: This band must be completely rechecked after the medium wave band has been rechecked.

LIST OF REPAIR PARTS

Part No.	Description	Circuit Diagram Reference
	CONDENSERS	
100-11	.01 x 400 Volt Tubular	C11-C12
100-20	.2 x 200 Volt Tubular	C2-C8
100-22	.05 x 200 Volt Tubular	C1-C9
100-25	.002 x 600 Volt Tubular	C17
100-27	.025 x 600 Volt Tubular	C14
102-6	8 Mfd. x 250 Volt Electrolytic	C15
102-7	8 Mfd x 300 Volt Electrolytic	C16-C13
103-12	.00025 Mica—Type MT—20%	C5
103-33	.00005 Mica—Type MT—20%	C7
105-54	.002 Mica—Type MW—2½%	C4
103-47	.00004 Mica—Type MT—10%	
	RESISTORS	
106-26	(220 Ohm R18), (82 Ohm R13), (52 Ohm R14) Metal Clad Resistor	R13-R13-R14
130-4	1 Meg Ohm—½ Watt—20%—100 Volt Carbon	R9
130-19	1 Meg Ohm—½ Watt—20%—100 Volt Carbon	R7
130-27	50 Ohm—½ Watt—20%— 2 Volt Carbon	R6
130-34	19 Ohm— 1 Watt—20%—100 Volt Carbon	R5
130-101	500 M Ohm—½ Watt—10%— 50 Volt Carbon	R11
130-103	100 M Ohm—½ Watt—10%—50 Volt Carbon	R1-R10-R16
130-104	2M Ohm—1 Watt—20%—100 Volt Carbon	R4-R5
130-105	150 Ohm—½ Watt—20%—10 Volt Carbon	R2
130-110	1 Meg Ohm—1/10 Watt—20%—100 Volt Carbon	R17
130-117	50M Ohm 1/10 Watt—20%—20 Volt Carbon	R8
	COILS	
108-73	Output I.F. Coil Assem. Comp. with Can.	T7
108-74	Input I.F. Coil Assem. Comp. with Can.	T6
110-47	Long Wave Oscillator Coil Assembly Complete	T4
110-49	Medium Wave and Short Wave Oscillator Coil Assembly Complete	T5
111-61	Long Wave Antenna Coil Assembly Complete	T1
111-62	Antenna Pre-Selector Coil Assembly Complete	T3
111-64	Medium Wave and Short Wave Antenna Coil Assembly Complete	T2
	SOCKETS	
121-8	Five Prong Socket—Marked "5PKR"	
121-12	Seven Prong Socket—Marked "6K7"	
121-14	Seven Prong Socket—Marked "6R7"	
121-15	Five Prong Socket—Marked "5T2"	
121-17	Six Prong Socket—Marked "6C6"	
121-18	Seven Prong Socket—Marked "6L7"	
121-36	Seven Prong Socket—Marked "6Q7"	

DIAL PARTS LIST

	ASSEMBLIES
117-41	Drive Bracket including: 1—No. 117-19—Tuning Shaft Bushing
117-64	Switch Disc and Link Assembly, including: 1—No. 117-21 —Switch Arm; 1—No. 117-35 —Bushing with Screws; 1—No. 117-40B—Switch Link; 3—No. 121-25 —Spring Washers; 3—No. 142-5 —Rivets; 1—No. 112-144 —Switch Dis.—Inc. Red Tape
	DIAL PARTS ONLY
112-125	Drive Belt
112-143	Oval Escutcheon complete with Celluloid Crystal
112-172	Dial Scale comp. with Fastener, Pointer Disc, & Screw
112-147	Tuning Shaft
112-151	Pointer complete with Screw
112-154	Pilot Light Assembly
116-13	6.8 Volt T-51 Pilot Light
117-30A	Tuning Shaft Pulley
117-28	Stud, for take-up Spring
117-29	Pulley, for take-up Spring
120-14	Take-up Spring
134-9	Horse Shoe Washer
134-40	Rubber Grommet
	SPEAKER
114-47	Six Inch Dynamic Speaker 1650 Ohm Field
	TRANSFORMERS
104-65	50 Cycle Power Transformer 190 to 280 Volt Primary
104-55	Universal Transformer 50 Cycle Primary
104-54	Universal Transformer 25 Cycle Primary
	MISCELLANEOUS
101-46	Volume Control and Switch (1 Meg Ohm) R8
101-53	Tone Control (50M Ohm) R15
103-28	Three Gang Variable Condenser
107-5	Line Cord and Plug
118-169	Phono Radio Indicator Plate
115-13	Tube Shield
115-35	Antenna, Oscillator Coil Shield
115-54	Cover for Mains Adjustment
121-30A	3 Prong Mains Socket Assembly
124-31	J-8 Long Wave Series Pad 500 Mmf C8
124-38	J-8 Medium Wave Series Pad 565 Mmf C6
128-17	Band Switch S
125-22	Phono-Radio Toggle Switch
126-15	Wood Knob with Spring
128-54	Wing Nuts for Mains Cover (115-54)
171-2	Phone Jack Assembly

CATHODE RAY TUNING INDICATOR PARTS

107-35	Cable and Socket Assembly
112-158	Metal Oval Escutcheon
117-67	Holder and Clamp
130 110	1 Meg. Ohm—1/10 Watt—10%—200 Volt Carbon

All resistors and mica condensers are RMA color coded—specify value and/or resistor or condenser (per schematic diagram) and model number

Mica condensers are coded with an additional dot indicating tolerance:

Tolerance Percent	Color of Dot
2½%	White
5%	Green
10%	Blue
15%	Yellow
20%	Red
More than 20%	None

When ordering condensers, specify part number, model and/or capacitor (per schematic diagram) and model number.

When ordering parts, always specify part and model number as well as serial number of chassis.

WHEN ORDERING SPEAKER PARTS: CONES, FIELD COILS, OUTPUT TRANSFORMERS, SPECIFY PART NUMBER OF SPEAKER AND MAKE

©John F. Rider, Publisher

©John F. Rider, Publisher

MODEL 777-C

MODEL 777, Series Schematic, Voltage Changes, Parts

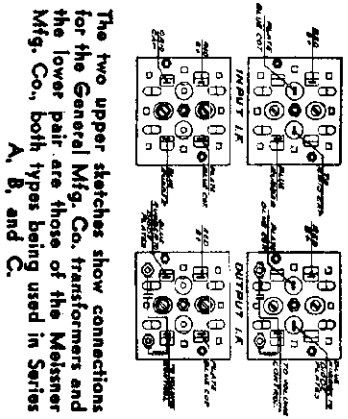

The two upper sketches show connections for the General Mfg. Co. transformers and the lower pair are those of the Meissner Mfg. Co., both types being used in Series A, B, and C.

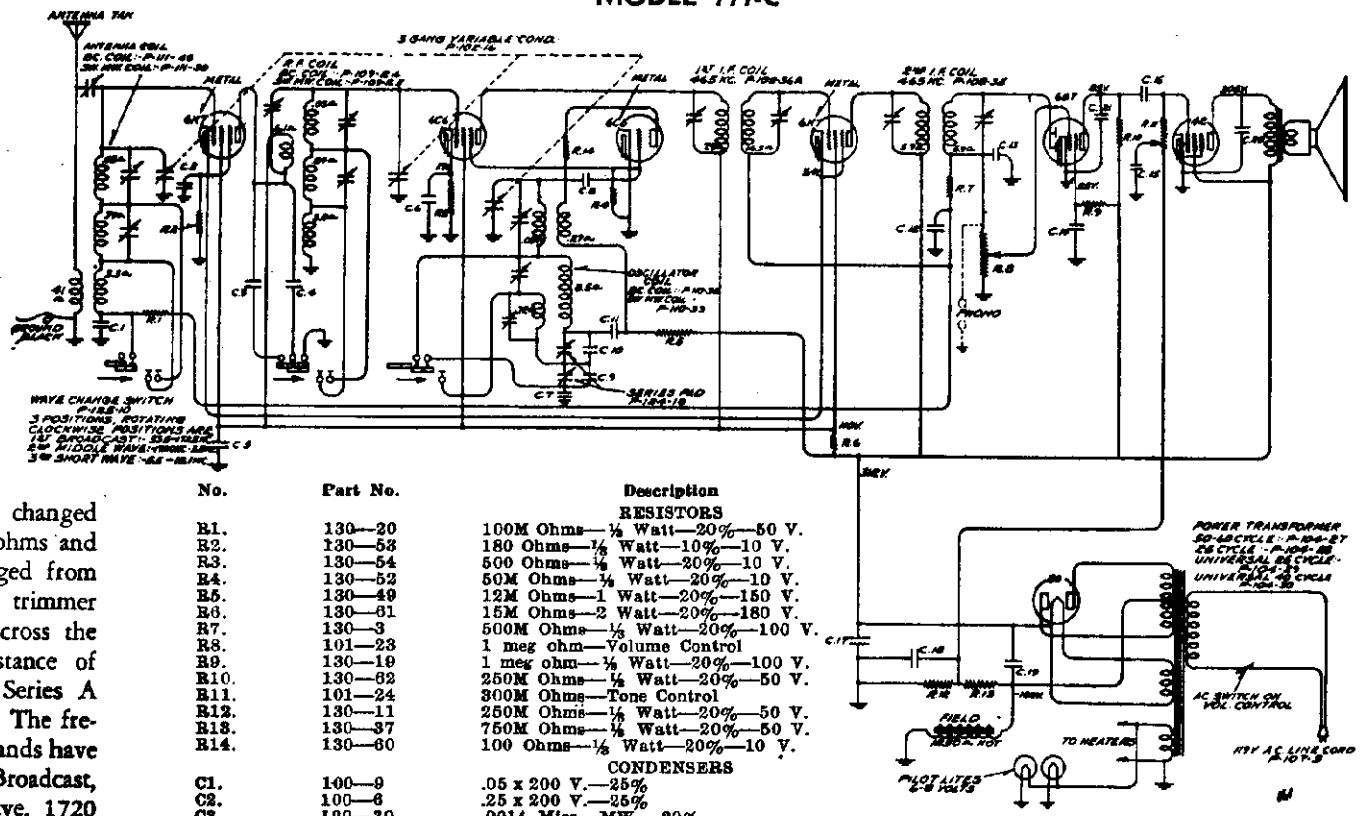

The resistor, R-5, has been changed from 19,000 ohms to 12,000 ohms and condenser C-9 has been changed from 0.0014 mf. to 0.0012 mf. A trimmer condenser has been shunted across the oscillator coil, having a resistance of 0.72 ohm, as it was in the Series A model, but not in the Series B. The frequencies covered by the three bands have been revised; they are now: Broadcast, 535 to 1725 kc.; Middle Wave, 1720 kc. to 5.5 mc., and Short Wave, 5.5 to 18.0 mc.

The chassis layout for the Series C is the same as that shown on *Belmont page 6-30* for the Series B, with the following exceptions: 6K7 tubes are used instead of the 6D6 tubes and the 76 is replaced by a 6C5.

The alignment data is the same as that given on *page 6-31 of Rider's Volume VI.*

Two types of i-f. transformers are used in the production of Model 777 Series A, B, and C. The operation and performance of these coils are identical, the only difference being in the way they are connected. The accompanying drawing shows the way each transformer is connected. The i-f. peak is 465 kc.

No.	Part No.	Description
		RESISTORS
R1.	130—20	100M Ohms—⅛ Watt—20%—50 V.
R2.	130—53	180 Ohms—½ Watt—10%—10 V.
R3.	130—54	500 Ohms—½ Watt—20%—10 V.
R4.	130—52	50M Ohms—⅛ Watt—20%—10 V.
R5.	130—49	12M Ohms—1 Watt—20%—150 V.
R6.	130—61	15M Ohms—2 Watt—20%—180 V.
R7.	130—3	500M Ohms—⅛ Watt—20%—100 V.
R8.	101—23	1 meg ohm—Volume Control
R9.	130—19	1 meg ohm—⅛ Watt—20%—100 V.
R10.	130—62	250M Ohms—⅛ Watt—20%—50 V.
R11.	101—24	300M Ohms—Tone Control
R12.	130—11	250M Ohms—⅛ Watt—20%—50 V.
R13.	130—37	750M Ohms—⅛ Watt—20%—50 V.
R14.	130—60	100 Ohms—⅛ Watt—20%—10 V.
		CONDENSERS
C1.	100—9	.05 x 200 V.—25%
C2.	100—6	.25 x 200 V.—25%
C3.	129—30	.0014 Mica—MW.—20%
C4.	129—21	.0002 Mica—MT—20%
C5.	100—24	.25 x 400 V.—25%
C6.	100—30	.1 x 200 V.—25%
C7.	129—29	.0038 Mica—MW—2½%
C8.	129—31	.000025 Mica—MT—15%
C9.	129—25	.0012 Mica—MW.—5%
C10.	129—28	.00064 Mica—MT—5%
C11.	100—13	.05 x 400 V.—25%
C12.	100—13	.05 x 400 V.—25%
C13.	129—32	.00003 Mica—MT—30%
C14.	118—12	.1 x 200 V.—25%
C15.	100—11	.01 x 400 V.—25%
C16.	100—13	.05 x 400 V.—25%
C17.	103—4	16 mfd. x 350 V. Electrolytic
C18.	118—12	.25 x 200 V.—20%
C19.	103—8	14 mfd. x 400 V.
C20.	100—19	.006 x 600 V.—25%
C21.	129—5	.0001 Mica—MT—20%

C.14. C.18, in Dual Unit. P-118-12

Numbers prefixed by letter "P" are Part Nos.

Voltages taken from points indicated to chassis ground. Set not tuned to strong signal.

	MISCELLANEOUS
111—40	B.C. Coil
111—39	S.W.—MW. Coil
	R.F. Coil
109—24	B.C. Coil
109—25	S.W. M.W. Coil
	Oscillator
110—32	B. C. Coil
110—33	S.W. M.W. Coil
108—36A	Input I.F. Coil 465 Kc.
108—35	Output I.F. Coil 465 Kc.
124—18	Dual Series Pad
125—10	Wave change switch
114—13	Speaker 6 in. Field 1250 ohms
114—27	Speaker 8 in. Field 1250 ohms
104—27	Power Transformer 50-60 Cycle
104—28	Power Transformer 25 Cycle
104—29	Power Transformer 25 Cycle Universal
104—30	Power Transformer 40 Cycle Universal

MODELS 777, Series A, B, C
Socket, Trimmers, Notes
MODEL 770, Series A
Notes

BELMONT RADIO CORP.

DESCRIPTION

MODEL 777, SERIES C

The tube complement of this chassis is as follows:

1—Type 6K7—remote cut-off pentode R.F. amplifier.
1—Type 6C6—pentode first detector.
1—Type 6C5—oscillator.
1—Type 6K7—remote cut-off pentode I.F. amplifier
1—Type 6B7—duplex diode triode second detector, A.V.C. and audio.
1—Type 42—pentode output.
1—Type 80—high vacuum rectifier.

Transformers are available and chassis are sometimes equipped with universal transformers for operation on 40 and 60 cycles and with primary taps for 108, 125, 150, 220 and 250 volts (see instructions) and also sometimes equipped with 25 cycle transformers with 105-115 volt or 220 volt primaries, not universals.

I. F. Freq. 465 Kilocycles

INTERMITTENT HUM

MODEL 777 SERIES B-C AND 770 SERIES A

In a few isolated cases, difficulty has been experienced with intermittent hum. This hum usually appears only after the receiver has been allowed to operate for some time and temporarily disappears upon snapping the line switch off and on. This difficulty is generally due to the opening up of the common lead of the dual condenser (.1—.25—220 V.—part No. 118—12), at the point of attachment of the lead to the condenser foil.

This condenser is indicated as C-13 and C-14 on the circuit diagram, C-14 being the .1 mfd. x 200 V. screen bypass of the 6B7, while C-18 is a .25 mfd. x 200 V. unit acting as a hum filter for the bias voltage of the type 42 tube. Examination of the circuit will show that when this occurs, the entire hum voltage of the filter is impressed on the screen of the type 6B7 tube. When the above difficulty occurs, it is generally advisable to replace the entire unit by two separate units of identical capacity and voltage rating as the components of the original unit.

SCINTILLATION NOISE DURING WARM-UP OF TUBES

MODEL 777 SERIES B-C AND MODEL 770 SERIES A

When a model 777 or model 770 receiver is first turned on, a frying noise will generally be noted. This noise continues until the tubes warm-up and the receiver begins to draw current. It is created by scintillation of the electrolytic filter condensers. During the time the tubes are warming up, they draw no current from the rectifier causing the voltage across the first condenser to exceed the scintillating voltage of the electrolytic condenser. The condensers used however are of the regulating type and are purposely designed in such a manner that during the heating period of the tubes, the condensers draw considerable leakage current, thereby loading the rectifier and preventing excessive voltage on other circuit components. The condensers are designed to withstand this temporary overload without detrimental effect on the life of the electrolytic or the receiver. DO NOT THEREFORE REPLACE CONDENSERS BECAUSE OF THIS SCINTILLATION NOISE. RATHER CONSIDER IT AS A SIGN OF NORMAL OPERATION.

I.F. TRANSFORMERS

MODEL 777 SERIES A-B-C

Two types of I.F. transformers were used in the production of Model 777 Series A-B-C. The operation and performance of these coils are identical, the only difference being in the manner in which they are connected. Following are drawings of both types of I.F. transformers showing connections for input and output I.F. transformers.

For drawings, see previous page

SERVICE NOTES

Voltages taken from different points of circuit to chassis are measured with volume control full on, all tubes in their sockets and speaker connected, with a volt meter having a resistance of 1000 ohms per volt. These voltages are clearly indicated on the circuit diagrams

IN ORDER TO PREVENT SIGNAL FROM ACTING UPON AVC AND AFFECTING ACCURACY OF VOLTAGE MEASUREMENTS, AERIAL AND GROUND LEADS SHOULD BE SHORT CIRCUITED WHILE MAKING MEASUREMENTS.

All voltages are to be measured with 119 volts on the primary of the power transformer.

Resistances of coils and transformer windings are indicated in ohms on schematic circuit diagrams.

To check for open by-pass condensers, shunt each condenser with another condenser of the same capacity and voltage rating, which is known to be good, until the defective unit is located.

Excessive hum, stuttering, low volume and a reduction in all D.C. voltages is usually caused by a shorted electrolytic condenser, open by-pass condensers frequently cause oscillation and distorted tone.

Top View Model 777, Series C

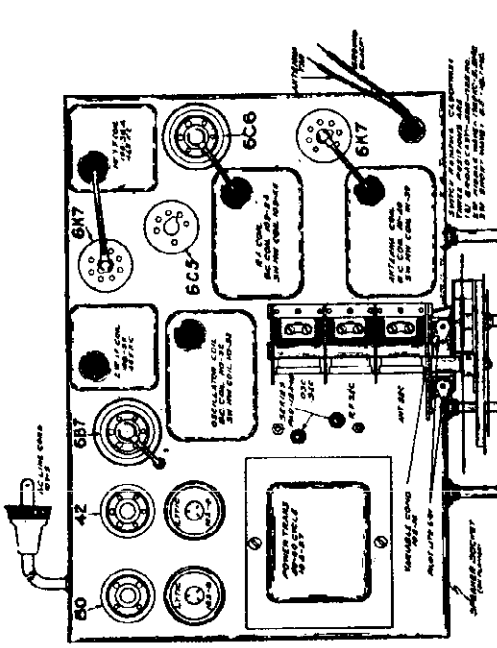

ALIGNING INSTRUCTIONS—Aligning procedure same as for Series B.

©John F. Rider

BELMONT RADIO CORP.

MODEL 778, Series A
Schematic, Socket
Trimmers, Parts

MODEL 778—SERIES A

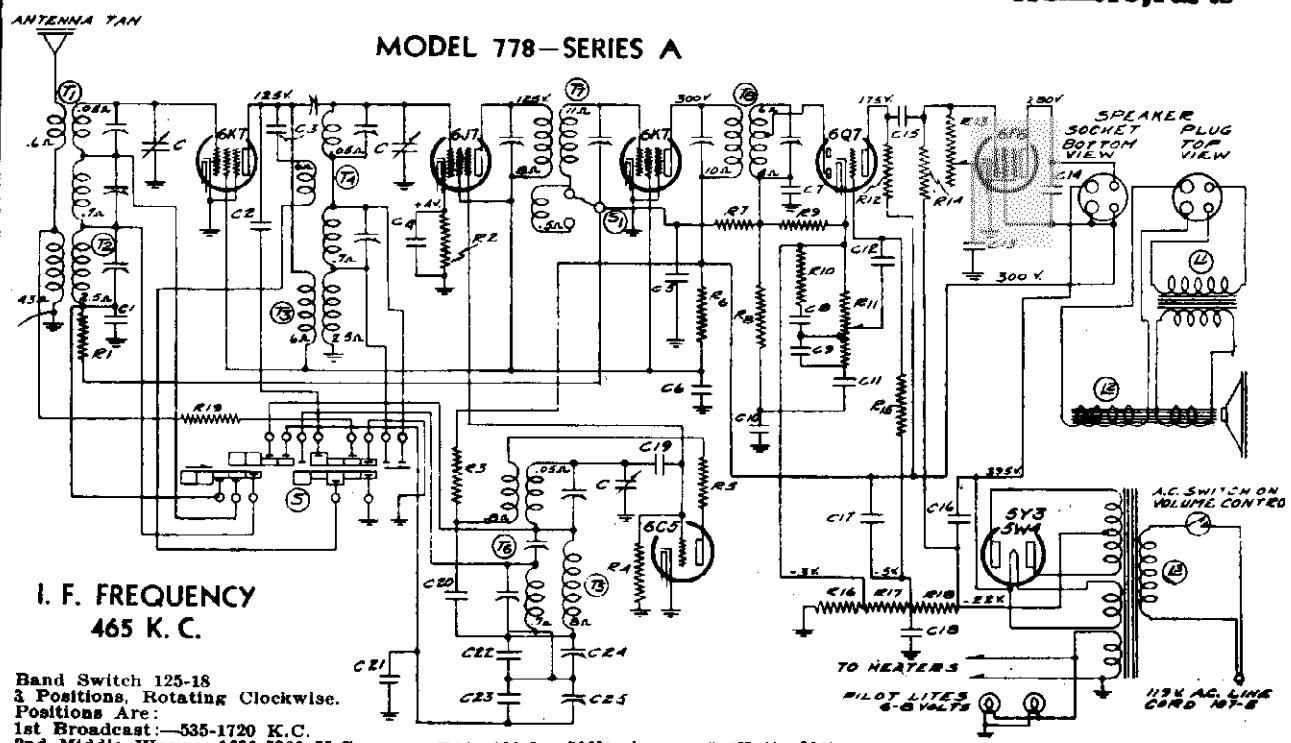

I. F. FREQUENCY
465 K. C.

Band Switch 125-18
3 Positions, Rotating Clockwise.
Positions Are:
1st Broadcast:—535-1720 K.C.
2nd Middle Wave:—1690-5300 K.C.
3rd Short Wave:—5.2-18.1 M.C.

RESISTORS

No.	Part No.	Description
R1	130-20	100M ohms—1/3 Watt—20%—50 Volt—Carbon
R2	130-43	2500 ohms—1/3 Watt—20%—20 Volt—Carbon
R3	130-77	10M ohms—1 Watt—20%—100 Volt—Carbon
R4	130-12	50M ohms—1/3 Watt—20%—20 Volt—Carbon
R5	130-60	100 ohms—1/3 Watt—20%—10 Volt—Carbon
R6	130-88	10M ohms—2 Watt—20%—Wire Wound
R7	130-3	500M ohms—1/3 Watt—20%—100 Volt—Carbon
R8	130-20	100M ohms—1/3 Watt—20%—50 Volt—Carbon
R9	130-11	250M ohms—1/3 Watt—20%—50 Volt—Carbon
R10	130-22	5000 ohms—1/3 Watt—20%—10 Volt—Carbon
R11	101-47	1 meg ohm—(Volume Control with A.C. Switch)
R12	130-20	100M ohms—1/3 Watt—20%—50 Volt—Carbon
R13	101-38	100M ohms—(Tone Control with Fidelity Switch)
R14	130-3	500M ohms—1/3 Watt—20%—100 Volt—Carbon
R15	130-38	2 meg ohm—1/3 Watt—20%—100 Volt—Carbon
R16	106-27	38 ohms—10% Muter Resistor
R17	106-27	28 ohms—10% Muter Resistor
R18	106-27	220 ohms—10% Muter Resistor
R19	130-27	50 ohms—1/3 Watt—20%—Carbon
		Note: R16, R17, R18 in one unit—part No. 106-27

CONDENSERS

C	102-30	One Section of three gang variable condenser.
C1	100-9	.05—200 Volt—25%
C2	129-59	.0003 Mica—MT—0—5%
C3	129-39	.00005 Mica—MT—0—20%
C4	100-9	.05—200 Volt—25%
C5	100-9	.05—200 volt—25%
C6	100-24B	.25—400 Volt—20%
C7	129-5	.0001 Mica—MT—0—20%
C8	100-9	.05—200 Volt—25%
C9	129-2	.0005 Mica—MT—0—20%
C10	129-60	.00015 Mica—MT—0—20%
C11	100-9	.05—200 Volt—25%
C12	100-11	.01—400 Volt—25%
C13	100-26	.02—400 Volt—25%
C14	100-32	.0005—1000 Volt—20%
C15	100-11	.01—400 Volt—25%
C16	103-8	14 mfd.—400 Volt Electrolytic
C17	103-6	8 mfd.—350 Volt Electrolytic
C18	100-6B	.25—200 Volt—20%
C19	129-31	.000025 Mica—MT—0—15%
C20	100-13	.05—400 Volt—25%
C21	129-54	.003 Mica—MW—W—2½%
C22	129-57	.0005 Mica—MT—0—5%
C23	129-58	.0021 Mica—MW—W—5%
C24	124-18	Padder, 175 mmf. working capacity.
C25	124-18	Padder, 300 mmf. working capacity.
		Note: C24, C25 in one unit—part No. 124-18.

PARTS

T1	111-54	M.W. and S.W. Antenna Coil Assem.
T2	111-55	Broadcast Ant. Coil Assem.
T3	109-30	Broadcast R.F. Coil Assem.
T4	109-29	M.W. and S.W. R.F. Coil Assem.
T5	110-43	Broadcast Osc. Coil Assem.
T6	110-42	M.W. and S.W. Osc. Coil Assem.
T7	108-64	Input I.F. Coil—465 Kc.
T8	108-63	Output I.F. Coil—465 Kc.
L1		Output Trans. (on speaker).
L2	114-36	8" Speaker (Field Resistance 1250 Ohms)
L3	104-27	Power Transformer (50-60 Cycle)
S	125-18	Band Switch
S1	101-38	Fidelity Switch on Tone Control

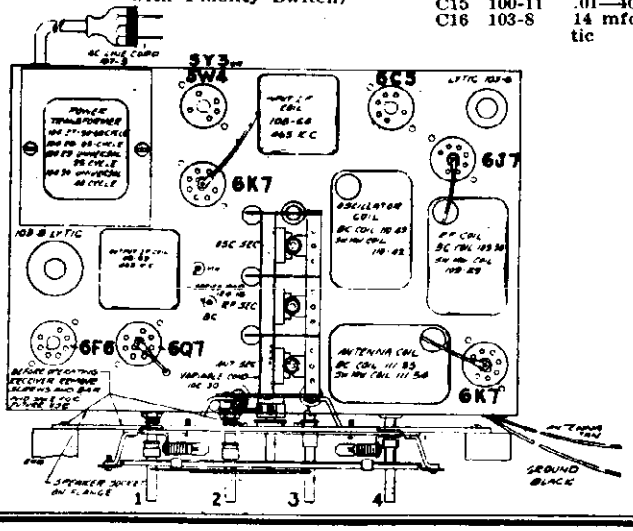

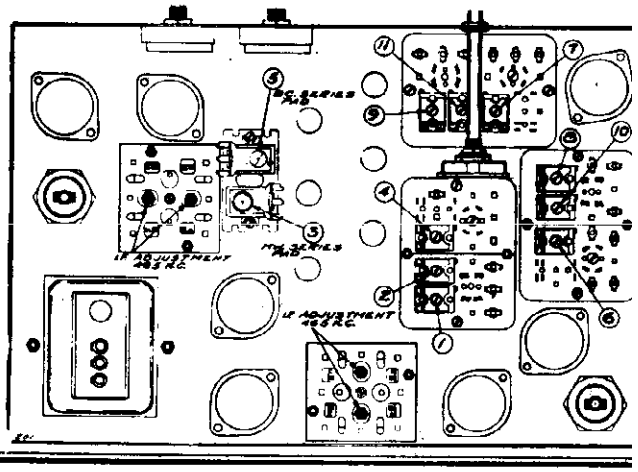

©John F. Rider

MODEL 778, Series A
Alignment, Notes

BELMONT RADIO CORP.

NEVER ATTEMPT TO REPLACE FUSE WITHOUT FIRST DISCONNECTING POWER.

NEVER REPLACE WITH FUSE OTHER THAN 2 AMPERE RATING.

Voltages taken from different points of circuit to chassis are measured with volume control full on, all tubes in their sockets and speaker connected, with a volt meter having a resistance of 1000 ohms per volt. These voltages are clearly indicated on the circuit diagram.

IN ORDER TO PREVENT SIGNAL FROM ACTING UPON AVC AND AFFECTING ACCURACY OF VOLTAGE MEASUREMENTS, AERIAL AND GROUND LEADS SHOULD BE SHORT CIRCUITED WHILE MAKING MEASUREMENTS.

All voltages are to be measured with 110 volts on the primary of the power transformer.

Resistances of coils and transformer windings are indicated in ohms on schematic circuit diagrams.

To check for open by-pass condensers, shunt each condenser with another condenser of the same capacity and voltage rating, which is known to be good, until the defective unit is located.

Excessive hum, sputtering, low volume and a reduction in all D.C. voltages is usually caused by a shorted electrolytic condenser, open by-pass condensers frequently cause oscillation and distorted tone.

ALIGNING INSTRUCTIONS

Dummy Antennas

The following dummy antennas are used in aligning and are referred to in the following alignment instructions as "Dummy 1", "Dummy 2", and "Dummy 3".

Dummy 1: (I.F.)—Consists of a .1 mfd. condenser connected in series with the external oscillator.

Dummy 2: (Broadcast)—Consists of a 200 mmfd. condenser and a 20 ohm resistor connected in series with each other and in series with the external oscillator.

Dummy 3: (Intermediate and Short Wave)—Consists of a .1 mfd. condenser and a 400 ohm resistor connected in series with each other and in series with the external oscillator.

Resonance Indicator:

Use as a resonance indicator an output meter connected across the primary of the speaker input transformer or by means of an adapter between the plate and screen terminals of the type 6F6 output tube. Maximum deflection of the meter indicates resonance. Use only enough signal to get a readily readable output. A low range output meter or the low scale of a multi-range meter should be used.

CAUTION:

No alignment adjustments should be attempted without first thoroughly checking over all other possible causes of trouble, such as poor installations, open or grounded antenna systems, loss in the voltages, defective tubes, condensers and resistors. In order to properly align this chassis, an oscillator (generator) is absolutely necessary. No aligning adjustments should be attempted with the chassis in the cabinet. To remove the knobs, pull them off and to take the chassis out of the cabinet, remove the four bolts by which it is fastened.

(a) Connect external oscillator set at 465 kilocycles, in series with "Dummy 1", to the control grid cap of the type 6K7 tube, located between the two I.F. transformers, and adjust the output I.F. transformer (108-63) to resonance.

(b) With "Dummy 1" still connected, move oscillator output clip from grid of 6K7 to grid cap to 6J7 and adjust input I.F. transformer (108-64) to resonance.

(c) With oscillator still connected to 6J7, re-adjust output I.F. transformer if necessary.

ALIGNMENT PROCEDURE

The following adjustments to be made after the I.F.'s have been aligned as explained above.

BROADCAST BAND ALIGNMENT:

1. With wave changing switch in the broadcast position, extreme left of its rotation, and with external oscillator set at 600 kilocycles and connected in series with "Dummy 2" to the tan antenna and black ground lead, make the following adjustments:

(a) Adjust broadcast series pad (adjustment number 5) to resonance with oscillator. Keep set in tune with oscillator by slowly rocking to and fro the variable condenser until maximum output is obtained. Note: This adjustment is accessible from the top of the chassis and is located between the variable condenser and the 108-63 output I.F. transformer. See top view, Fig. 3.

(b) Re-set external oscillator to 1400 K.C., move dial pointer to 1400 K.C. and adjust oscillator (adjustment number 4), R.F. (adjustment number 6) and antenna (adjustment number 7) to resonance. See bottom view for location of these adjustments, Fig. 1.

(c) Repeat adjustments "a" and "b" until sensitivity is at its maximum.

NOTE: IT IS EXTREMELY NECESSARY IN MAKING ALL OF THESE ADJUSTMENTS THAT THE FUNDAMENTAL OSCILLATOR SIGNAL BE TUNED IN AND NOT THE IMAGE FREQUENCY WHICH WILL FALL BELOW THE FUNDAMENTAL.

SHORT WAVE BAND ALIGNMENT:

1. With wave changing switch in the short wave position, extreme right of its rotation, and with external oscillator set at 17 megacycles and connected in series with "Dummy 3" to the tan antenna and black ground lead, make the following adjustments:

(a) Move dial pointer to 17 megacycles and adjust short wave oscillator (adjustment number 11), short wave R.F. (adjustment number 8) and short wave antenna (adjustment number 9) to resonance.

(b) Re-set external oscillator to 6 megacycles and pick up signal by rotating variable condenser and check for sensitivity.

INTERMEDIATE BAND ALIGNMENT:

1. With wave changing switch in the intermediate wave position, center of its rotation, and with external oscillator set at 1500 K.C. and connected in series with "Dummy 3" to the tan antenna and black ground lead, make the following adjustments:

(a) Rotate variable condenser to approximately 1500 K.C. tune in oscillator signal and adjust M.W. series pad (adjustment number 3) (see top view) to resonance.

Slowly rock condenser to and fro while making this adjustment to be sure maximum output is obtained.

(b) Set external oscillator at 5 M.C., rotate condenser, pick up signal and adjust intermediate wave R.F. (adjustment number 10), intermediate wave antenna (adjustment number 11) and intermediate wave oscillator (adjustment number 12) to resonance.

(c) Re-check broadcast alignment and if it is found necessary to re-adjust either R.F. or antenna trimmers, repeat the 17 M.C. short wave and 5 M.C. intermediate wave adjustments.

ALIGNING I.F. TRANSFORMERS (465 K.C.)

Part No. 108-63 Output I.F. Transformer
Part No. 108-64 Input I.F. Transformer

These I.F. transformers have two adjustments, both of which are accessible from the underside of chassis (see bottom view).

1. With volume control full on, (the extreme right of its rotation), the wave changing switch in the broadcast position, (extreme left of its rotation), the tone control on "Hi" part of the sharp position (as much right rotation as possible with cut operating the Hi Fidelity switch), and with the variable condenser set to approximately 1400 kilocycles, make the following adjustments:

DESCRIPTION

The tube complement of this chassis is as follows:

1—Type 6K7 Remote cut-off pentode R.F. amplifier
1—Type 6J7—pentode first detector.
1—Type 6C5 Oscillator
1—Type 6K7 Remote cut-off pentode I.F. amplifier (465 K.C.)
1—Type 6Q7 duplex diode pentode second detector, A.V.C. and audio.
1—Type 6F6—pentode output amplifier.
1—Type 5Y3 or 5W4—high vacuum rectifier.

Transformers are available and chassis are sometimes equipped with universal transformers for operation on 40 and 50 cycles and with primary taps for 105, 125, 150, 220 and 250 volts (see instructions) and also sometimes equipped with 25 cycle transformers with 105-115 volt or 220 volt primaries, not universals.

SERVICE NOTES

Note: Chassis with serial numbers from 6C229300 to 6D245728 were equipped with a fuse in the primary circuit of the power transformer and supplied with a type 5Z4 rectifier tube.

This fuse is made accessible for replacement by removing fuse cover located on back flange of chassis, replace only with a 2 ampere fuse. If replacement fuse blows out, check tubes, (particularly 5Z4 rectifier) circuit, repair or replace defective tubes or parts.

MODEL 778 - Series A

7-Tube A. C. All Wave

3-Band High Fidelity Superheterodyne Receiver

©John F. Rider, Publisher

BELMONT RADIO CORP.

MODEL 845, Series A
Schematic, Socket Trimmers

MODEL 845—SERIES "A"

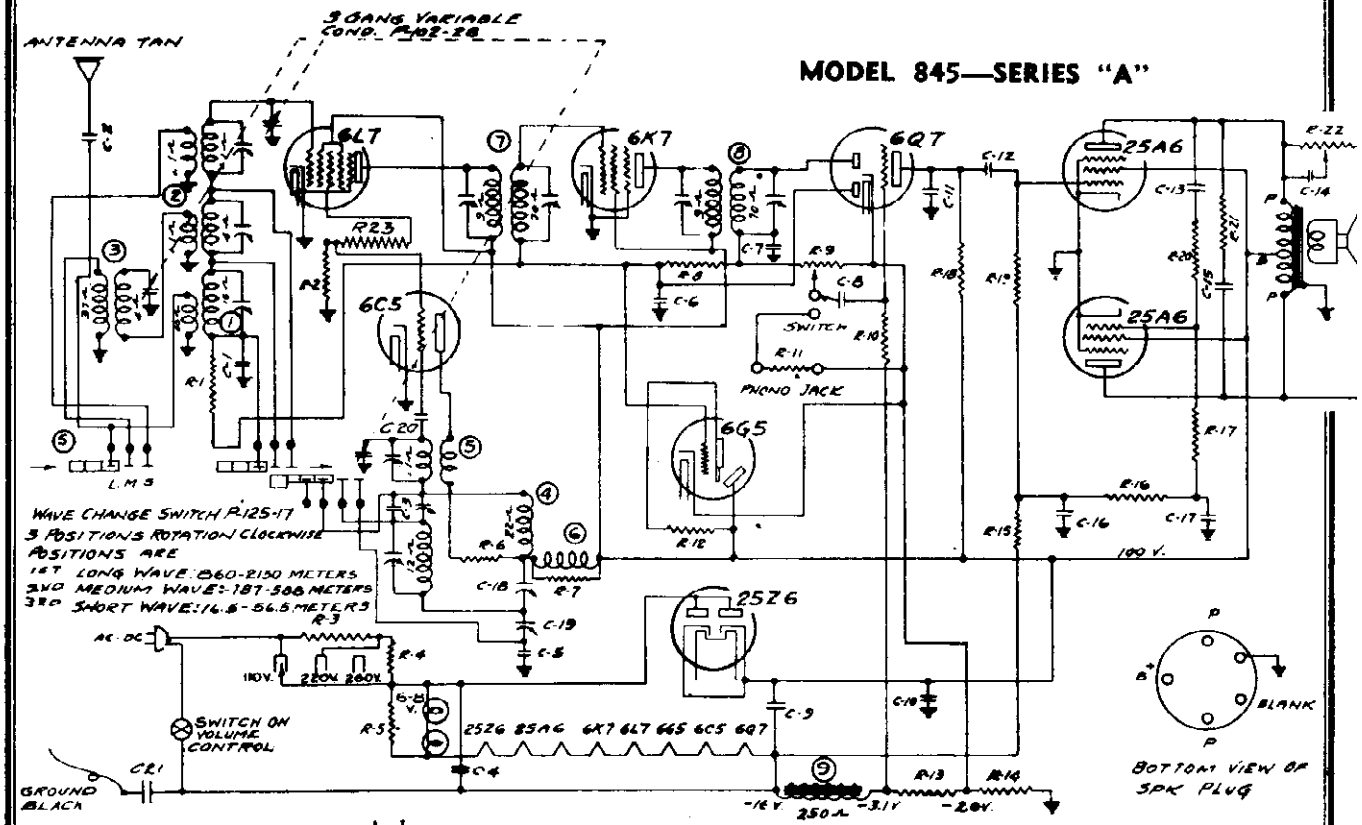

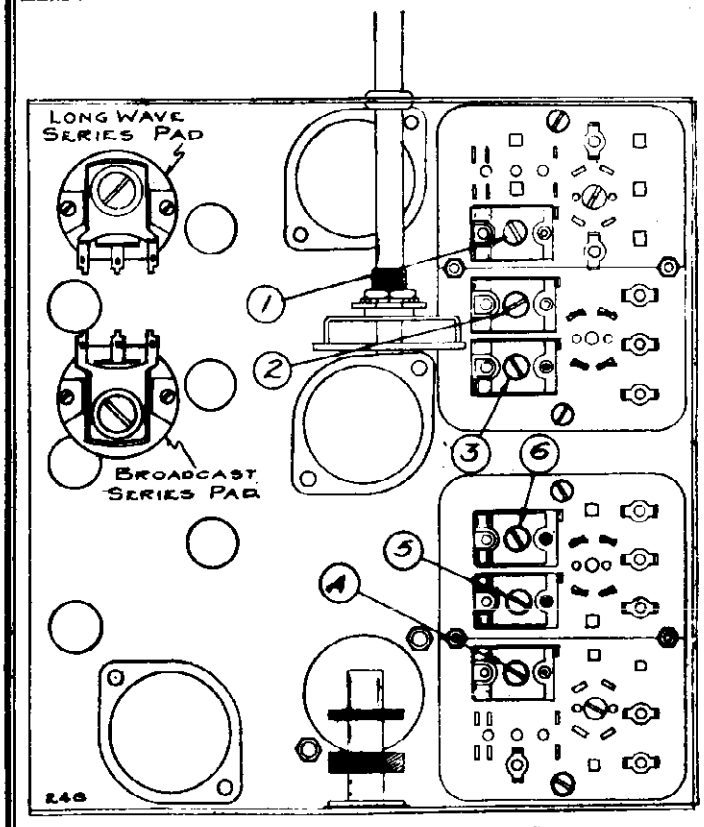

FIG. 2—BOTTOM VIEW (Showing Trimmers)

I. F. FREQUENCY
465 K. C. (645.1 Meters)

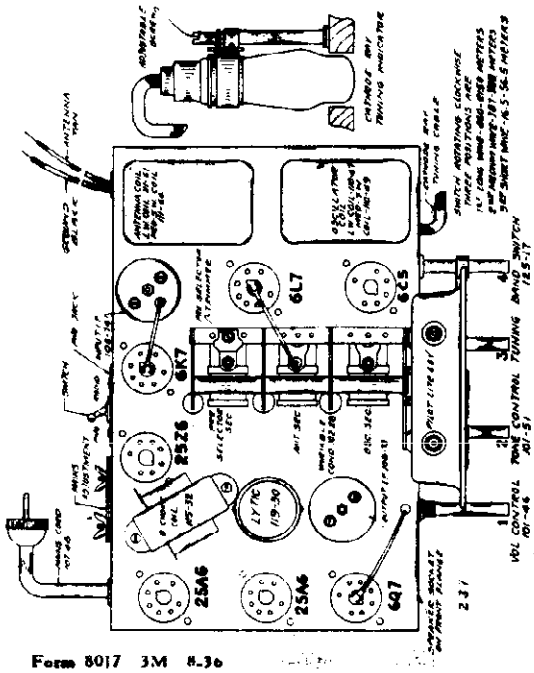

TOP VIEW—FIG. 1

Form 8017 3M 8-36

©John F. Rider, Publisher

MODEL 845, Series A
Alignment, Notes, Parts

BELMONT RADIO CORP.

Model 845 - Series A

8-Tube Including Cathode-Ray Tuning Indicator 3-Band A. C.-D. C. Superheterodyne Receiver

110-220-260 Volts A. C. (Any Cycles) or D. C.

TUBES:

The tube complement of this chassis consists of the latest metal type tubes, which are interchangeable with "metal-glass" types, or glass tubes with octal bases.

The type and function of each tube is as follows:

1—Type 6L7 Pentagrid Mixer, First Detector.
1—Type 6C5 Oscillator.
1—Type 6K7 Remote Cut-Off Pentode, I. F. Amplifier (465 K.C.)
1—Type 6Q7 Duplex Diode Triode Second Detector, A.V.C. and First Audio.
2—Type 25A6 Output Pentodes in Push Pull.
1—Type 25Z6 High Vacuum Rectifier.
1—Type 6G5 Cathode-Ray Tuning Indicator.
(Note:—6G5 available in all glass only.)

POWER SUPPLY:

This receiver is supplied for operation on 110-220-260 volts A.C. (any cycle) or D.C.

Three taps are provided for mains voltages. These taps are accessible upon removing the plate fastened with two wing nuts to back of chassis.

Set the tap at the voltage supplied by the local power company.

This is important.

NOTE:

If set does not operate in one minute on Direct Current reverse plug in receptacle.

SERVICE NOTES

Voltages taken from different points of circuit to chassis are measured with volume control full on, all tubes in their sockets and speaker connected, with a volt meter having a resistance of 1000 ohms per volt. These voltages are clearly indicated on the circuit diagram.

IN ORDER TO PREVENT SIGNAL FROM ACTING UPON AVC AND AFFECTING ACCURACY OF VOLTAGE MEASUREMENTS, AERIAL AND GROUND LEADS SHOULD BE SHORT CIRCUITED WHILE MAKING MEASUREMENTS.

All voltages as indicated on diagram are measured with 119 volt A.C. or D.C. mains.

With special mains voltages select tap nearest to actual mains voltage at time voltage measurements are to be made.

Resistances of coils and transformer windings are indicated in ohms on schematic circuit diagrams.

To check for open by-pass condensers, shunt each condenser with another condenser of the same capacity and voltage rating, which is known to be good, until the defective unit is located.

Excessive hum, stuttering, low volume and a reduction in all D.C. voltages is usually caused by a shorted electrolytic condenser, open by-pass condensers frequently cause oscillation and distorted tone.

ALIGNING INSTRUCTIONS
Dummy Antennas

The following dummy antennas are used in aligning the receiver, and are referred to in the following alignment instructions as "Dummy 1", "Dummy 2", and "Dummy 3".

Dummy 1: (I.F.)—Consists of a .1 mfd. condenser connected in series with the external oscillator.

Dummy 2: (Broadcast and long wave)—Consists of a 200 mmfd. condenser and a 20 ohm resistor connected in series with each other and in series with the external oscillator.

Dummy 3: (Short Wave)—Consists of a .1 mfd. condenser and a 400 ohm resistor connected in series with each other and in series with the external oscillator.

TEST FREQUENCIES USED

	Kilocycles	Meters
I. F.	465	645.1
Long Wave	150	2000
	350	860
	325	925
Broadcast	600	500
	1400	214
	1600	187
Short Wave	6000	50.0
	17000	17.6
	18200	16.5

Resonance Indicator:

Use as a resonance indicator an output meter connected across the primary of the speaker input transformer or by means of an adapter between the plate and cathode terminals of the 5 prong speaker socket. Maximum deflection of the meter indicates resonance. Use only enough signal to get a readily readable output. A low range output meter or the low scale of a multi-range meter should be used.

CAUTION:

No aligning adjustments should be attempted without first thoroughly checking over all other possible causes of trouble, such as poor installations, open or grounded antenna systems, low line voltages, defective tubes, condensers and resistors. In order to properly align this chassis, an oscillator (generator) is absolutely necessary. No aligning adjustments should be attempted with the chassis in the cabinet. To remove the knobs, pull them off and to take the chassis out of the cabinet, remove the four bolts by which it is fastened.

ALIGNING I.F. TRANSFORMERS
(465 K.C.) (645.1 Meters)

Part No. 108-73 Output I.F. Transformer.

Part No. 108-74 Input I.F. Transformer.

These I.F. transformers have two adjustments, both of which are accessible from the top of chassis (see top view).

1. With volume control full on (the extreme right of its rotation), the band changing switch in the broadcast position, (center of its rotation), and with the variable condenser set to approximately 1400 kilocycles, make the following adjustments:
   (a) Connect external oscillator set at 465 kilocycles, in series with "Dummy 1," to the control grid cap of the type 6K7 tube, and adjust the output I.F. transformer (No. 108-73) to resonance.
   (b) With "Dummy 1" still connected, move oscillator output clip from grid of 6K7 to grid cap to 6L7 and adjust input I.F. transformer (No. 108-74) to resonance.
   (c) With oscillator still connected to 6L7, readjust output I.F. transformer (108-73) if necessary.

ALIGNMENT PROCEDURE

The following adjustments to be made after the I.F.'s have been aligned as explained above.

SHORT WAVE BAND ALIGNMENT:
16.5 Meters (18.2 Mc.) to 50.5 Meters (5.3 Mc.)

1. With band changing switch in the short wave position, extreme right of its rotation, and with the gang condenser in its minimum capacity position, plates entirely out of mesh, and with external oscillator connected in series with "Dummy 3" to the tan antenna and black ground lead, make the following adjustments:
   (a) Set external oscillator to 16.5 meters (18.2 Mc.) and adjust short wave oscillator trimmer (adjustment number 3, see Fig. 2) to resonance.
   (b) Re-set external oscillator to 17.6 meters (17.0 Mc.) and pick up signal by rotating gang condenser. Adjust short wave antenna trimmer (adjustment number 6) to resonance.
   (c) Re-set external oscillator to 50 meters (6.0 Mc.) and check for sensitivity.

NOTE: It is extremely necessary in making all of these adjustments that the fundamental oscillator signal be tuned in and not the image frequency which will fall below the fundamental. An example of this is an image of a fundamental 18.3 megacycle signal appears near 17.4 megacycles.

MEDIUM OR BROADCAST BAND ALIGNMENT:
586 Meters (510 K.C.) to 187 Meters (1600 K.C.)

1. With hand changing switch in the medium wave position, center of its rotation, and with gang condenser in its minimum capacity position, plates entirely out of mesh, and with external oscillator connected in series with "Dummy 2" to tan antenna lead and black ground lead, make following adjustments:
   (a) Set external oscillator to 187 meters (1600 K.C.) and adjust medium wave oscillator trimmer to resonance (adjustment number 2; see bottom view of coil assembly, Fig. 2.)
   (b) Re-set external oscillator to 214 meters (1400 K.C.), rotate variable gang condenser and pick up signal. Adjust medium wave antenna trimmer (Adjustment number 5) to resonance; also adjust preselector trimmer which is mounted on the top of the rear section of the three gang variable tuning condenser to resonance. (See top view of chassis, Fig. 1, for location of this adjustment.)
   (c) Re-set external oscillator to 500 meters (600 K.C.), and adjust medium wave series pad to resonance by rotating condenser to approximately 600 K.C., rocking it slowly to and fro until by adjusting series pad maximum output is attained. This adjustment is located on the bottom of the chassis directly under the variable gang condenser. (See bottom view of chassis, Fig. 2.)
   (d) Repeat adjustments "a" and "b" until sensitivity is at its maximum.
   (e) Check for tracking and sensitivity at 300 meters (1000 K.C.) **Under no circumstances bend plates of variable condenser sections to correct tracking.**

IMPORTANT: This band must be completely rechecked after the long wave band has been adjusted.

LONG WAVE BAND ALIGNMENT:
860 Meters (350 K.C.) to 2150 Meters (140 K.C.)

1. With band changing switch in the long wave position, extreme left of its rotation, and with gang condenser in its minimum capacity position, plates entirely out of mesh, and with external oscillator connected in series with "Dummy 2" to tan antenna lead and black ground lead, make following adjustments:
   (a) Set external oscillator to 860 meters (350 K.C.), and adjust long wave oscillator trimmer to resonance (adjustment number 1; see bottom view of coil assembly. Fig. 2.)
   (b) Re-set external oscillator to 925 meters (325 K.C.), rotate variable gang condenser and pick up signal. Adjust long wave antenna trimmer (Adjustment number 4) to resonance.
   (c) Re-set external oscillator to 2000 meters (150 K.C.), and adjust long wave series pad to resonance by rotating condenser to approximately 2000 meters, rocking it slowly to and fro until by adjusting series pad maximum output is attained. This adjustment is located on the bottom of the chassis directly under the variable gang condenser. (See bottom view of chassis, Fig. 2.)
   (d) Repeat adjustments "a" and "b" until sensitivity is at its maximum.

IMPORTANT: This band must be completely rechecked after the medium wave band has been rechecked.

LIST OF REPAIR PARTS
Serial No. 6M374800 and up

Part No.	Description	Circuit Diagram Reference
	CONDENSERS	
100-11	.01 x 400 Volt Tubular	C2, C8, C12, C13, C14
100-20	.1 x 200 Volt Tubular	C17
100-22	.05 x 200 Volt Tubular	C1
100-26	.02 x 400 Volt Tubular	C6
100-36	.01 x 1400 Volt Tubular (bare leads)	C21
100-39	.1 x 400 Volt Tubular (with bracket)	C4
100-43	.25 x 200 Volt Tubular (with bracket)	C16
100-44	.003 x 600 Volt Tubular	C15
119-30	Dual 26 mfd. Electrolytic Filter	C9, C10
129-12	.00025 Mica—Type MT—20%	C7, C11
129-39	.00005 Mica—Type MT—20%	C20
129-54	.003 Mica—Type MW—2½%	C5
129-67	.00004 Mica Type MT—10%	C3
	RESISTORS	
130-30	100 ohm (R4), 40 ohm (R5) Metal Clad	R4, R5
130-4	3 Megohm—1/3W—20%—100V Carbon	R8, R10
130-11	250 M ohm—1/3W—20%—50V Carbon	R15, R16
130-12	[illegible] M ohm—1/3W—20%—20V Carbon	R2, R7
130-17	.0 M ohm—1/3W—20%—20V Carbon	R21
130-20	100 M ohm—1/3W—10%—50V Carbon	R1, R11
130-27	50 ohm—1/3W—20%—3V Carbon	R6, R14
130-56	100 ohm—1/3W—20%—10V Carbon	R23
130-66	75 M ohm—1/3W—10%—50V Carbon	R17
130-100	150 M ohm—1/3W—20%—50V Carbon	R18
130-102	500 M ohm—1/3W—10%—50V Carbon	R19, R20
130-110	1 Megohm—1/10W—10%—100V Carbon	R12
130-128	20 ohm—1/3W—20%—10V Carbon	R13
	COILS	
108-73	Output I.F. Coil Assembly complete with can	8
108-88	Input I.F. Coil Assembly complete with can	7
110-46	Oscillator Choke coil	6
110-47	Long Wave Oscillator Coil Assembly, less can	4
110-49	Broadcast and Short Wave Oscillator Coil Assembly, less can	5
111-61	Long Wave Antenna Coil Assembly, less can	1
111-62	Antenna Preselector Coil Assembly	3
111-64	Broadcast and Short Wave Antenna Coil Assembly, less can	2
	SOCKETS	
121-8	Five Prong Socket—Marked "Spkr"	
121-12	Seven Prong Socket—Marked "6K7"	
121-17	Six Prong Socket—Marked "6C5"	
121-18	Seven Prong Socket—Marked "6L7"	
121-26	Seven Prong Socket—Marked "6Q7"	
121-31	Seven Prong Socket—Marked "25Z6"	
121-32	Seven Prong Socket—Marked "25A6"	
	SPEAKER	
114-49	Six Inch Permanent Magnet Dynamic	
	MISCELLANEOUS	
101-46	Volume Control and Switch (1 megohm)	R9
101-51	Tone Control (300 M ohm)	R22
102-28	Three Gang Variable Condenser	
105-32	250 ohm Filter Choke	
107-48	250 ohm Special Line Cord	R3
112-169	Phono-Radio Indicator Plate	
115-35	Antenna, Oscillator Shield	
115-54	Mains Cover Plate	
121-30	Three Prong Socket Assembly for Mains	
124-31	J. S. Long Wave Series Pad—300 mmf	C18
124-32	J. S. Broadcast Series Pad—565 mmf	C19
125-17	Band Switch	S
125-22	Phono-Radio Toggle Switch	
128-51	Small Wood Knob (with spring)	
133-24	Wing Nut for Mains Cover Plate (115-54)	
171-2	Phono Jack Assembly	

CATHODE RAY TUNING INDICATOR PARTS

107-49	Cable and Socket Assembly
113-168	Metal Oval Escutcheon
117-67	Holder and Clamp
130-110	1 Meg. Ohm—1/10 Watt—10%—100 Volt Carbon

DIAL PARTS LIST

ASSEMBLIES

117-41	Drive Bracket including: 1—No. 117-18—Tuning Shaft Bushing
117-66	Switch Disc and Link Assembly, including: 1—No. 117-12 —Switch Arm 1 No. 117-26 —Bushing with Screws 1—No. 117-40B—Switch Link 2—No. 121-26 —Spring Washers 2—No. 153-5 —Rivets 1—No. 112-144 —Switch Dia.—Inc. Red Tape

DIAL PARTS ONLY

113-125	Drive Belt
113-148	Oval Escutcheon complete with Celluloid Crystal
113-172	Dial Scale comp. with Fastener, Pointer Disc, & Screw
112-147	Tuning Shaft
113-151	Pointer complete with Screw
113-156	Pilot Light Assembly
116-13	6.8 Volt T-51 Pilot Light
117-20A	Tuning Shaft Pulley
117-38	Stud, for take-up Spring
117-39	Pulley, for take-up Spring
128-14	Take-up Spring
154-8	Horse Shoe Washer
154-40	Rubber Grommet

©John F. Rider, Publisher

MODEL 1070, Series A & B

BELMONT RADIO CORP **Schematics, Socket, Trimmers**

MODEL 1070—SERIES A

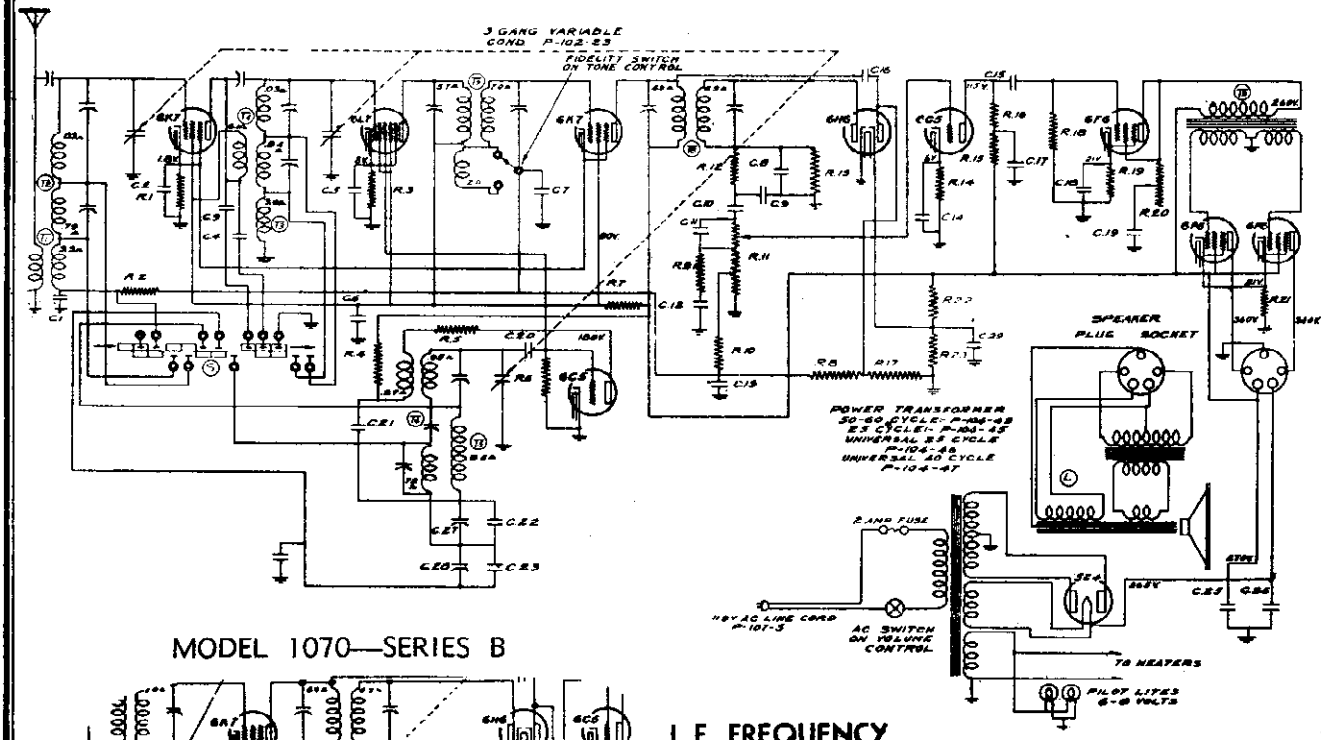

MODEL 1070—SERIES B

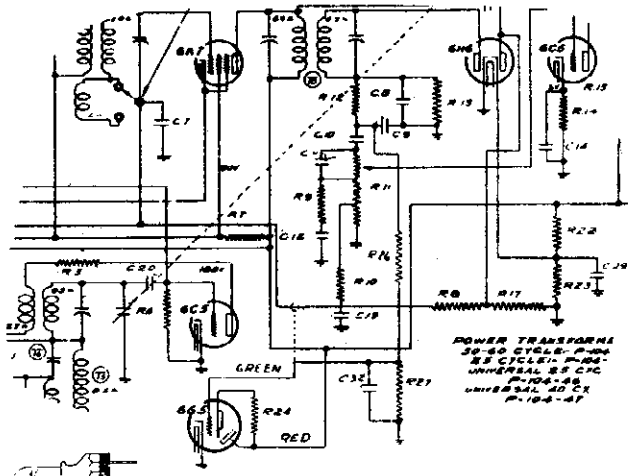

I. F. FREQUENCY
465 K. C.

TUNING RANGE—
Standard Broadcast Band
535-1725 Kilocycles.
Intermediate Band
1720-5500 Kilocycles
Short Wave Band
5.5-18.1 Megacycles.

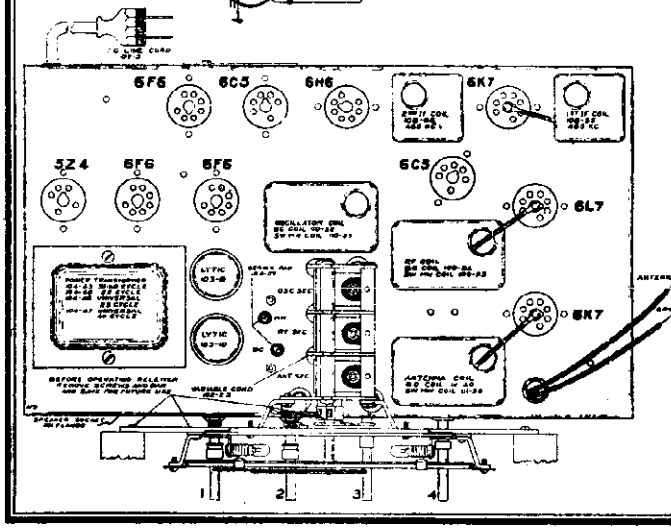

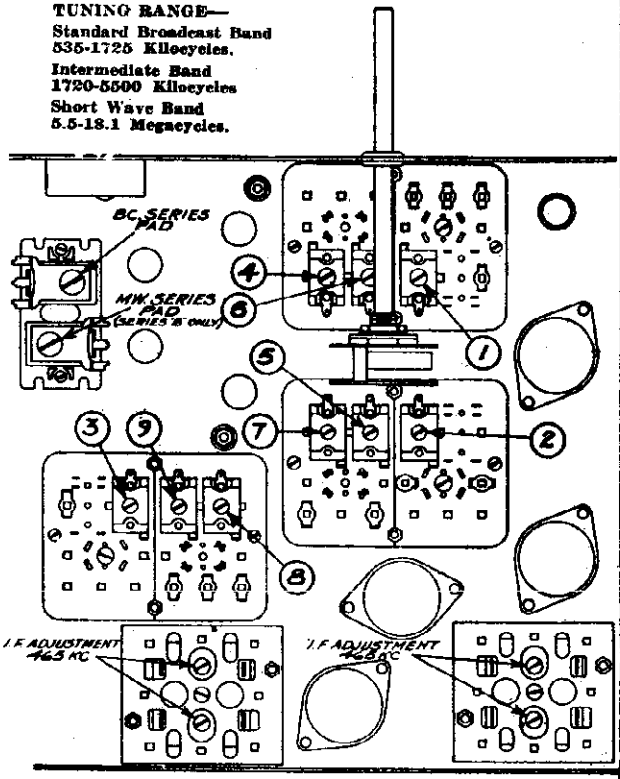

BOTTOM VIEW—SHOWING TRIMMERS

©John F. Rider, Publisher

©John F. Rider, Publisher

10-Tube A. C. All Wave

3-Band High Fidelity Superheterodyne Receiver with Cathode Ray Tuning Indicator

MODEL 1070 - Series B

NOTE:—Operation of Cathode-Ray Tuning Indicator

Due to unsatisfactory indication of the cathode-ray tuning indicator on weak signals in some territories, a change was made in the circuit to correct this condition and still allow the tube to operate correctly on a strong signal.

Referring to the circuit diagram, resistors R26, R27 and condenser C32 were added and connected to the green wire from the cathode-ray tuning indicator as shown.

The dotted line on the circuit diagram indicates the manner in which the green wire for the cathode-ray tuning indicator cable was formerly connected, before resistors R26, R27 and condenser C32 were added.

1—Type 6G5 Cathode ray tuning indicator.

Form 1068 2M 8-36

MODEL 1070 - Series A

DESCRIPTION

The tube complement of this chassis is as follows:

1—Type 6K7 Remote cut-off pentode R.F. amplifier
1—Type 6L7 Pentode first detector
1—Type 6C5 Oscillator
1—Type 6K7 Remote cut-off pentode I.F. amplifier (465 K.C.)
1—Type 6H6 Duplex diode second detector and A.V.C.
1—Type 6C5 First audio amplifier
1—Type 6F8 Pentode driver stage
2—Type 6F6 Class AB Output pentodes in push-pull
1—Type 5Z4 High vacuum rectifier

Transformers are available and chassis are sometimes equipped with universal transformers for operation on 40 and 60 cycles and with primary taps for 108, 125, 150, 220 and 250 volts (see instructions) and also sometimes equipped with 25 cycle transformers with 105-115 volt or 220 volt primaries, not universals.

SERVICE NOTES

Voltages taken from different points of circuit to chassis are measured with volume control full on, all tubes in their sockets and speaker connected, with a volt meter having a resistance of 1000 ohms per volt. These voltages are clearly indicated on the circuit diagrams of series A.

IN ORDER TO PREVENT SIGNAL FROM ACTING UPON AVC AND AFFECTING ACCURACY OF VOLTAGE MEASUREMENTS, AERIAL AND GROUND LEADS SHOULD BE SHORT CIRCUITED WHILE MAKING MEASUREMENTS.

All voltages are to be measured with 118 volts on the primary of the power transformer.

Resistances of coils and transformer windings are indicated in ohms on schematic circuit diagrams.

To check for open by-pass condensers, shunt each condenser with another condenser of the same capacity and voltage rating, which is known to be good, until the defective unit is located.

Excessive hum, stuttering, low volume and a reduction in all D.C. voltages is usually caused by a shorted electrolytic condenser, open by-pass condensers frequently cause oscillation and distorted tone.

This chassis is protected against damage from faulty tubes or abnormal line conditions by a fuse in the primary circuit.

If when set is turned on pilot lights do not light, look for a blown fuse.

This fuse is made accessible for replacement by removing fuse cover located on back flange of chassis, replace only with a 2 ampere fuse. If replacement fuse blows out, check tubes, (particularly 5Z4 rectifier) circuit, repair or replace defective tubes or parts.

NEVER ATTEMPT TO REPLACE FUSE WITHOUT FIRST DISCONNECTING POWER.

NEVER REPLACE WITH FUSE OTHER THAN 2 AMPERE RATING.

NOTE: Chassis with serial numbers from 5K194500 to 5K196497 have the fuse mounted on the under-side of the chassis, it is necessary to remove the chassis from the cabinet to replace the fuse.

ALIGNING INSTRUCTIONS

Dummy Antennas

The following dummy antennas are used in aligning and are referred to in the following alignment instructions as "Dummy 1", "Dummy 2", and "Dummy 3".

Dummy 1: (I.F.)—Consists of a .1 mfd. condenser connected in series with the external oscillator.

Dummy 2: (Broadcast)—Consists of a 200 mmfd. condenser and a 20 ohm resistor connected in series with each other and in series with the external oscillator.

Dummy 3: (Intermediate and Short Wave)—Consists of a .1 mfd. condenser and a 400 ohm resistor connected in series with each other and in series with the external oscillator.

Resonance Indicator:

Use as a resonance indicator an output meter connected across the primary of the speaker input transformer or by means of an adapter between the plate and cathode terminals of the 5 prong speaker socket. Maximum deflection of the meter indicates resonance. Use only enough signal to get a readily readable output. A low range output meter or the low scale of a multi-range meter should be used.

CAUTION:

No aligning adjustments should be attempted without first thoroughly checking over all other possible causes of trouble, such as poor installations, open or grounded antenna systems, low line voltages, defective tubes, condensers and resistors. In order to properly align this chassis, an oscillator (generator) is absolutely necessary. No aligning adjustments should be attempted with the chassis in the cabinet. To remove the knobs, pull them off and to take the chassis out of the cabinet, remove the four bolts by which it is fastened.

ALIGNING I.F. TRANSPORMERS (465 K.C.)

Part No. 108-62 Output I.F. Transformer
Part No. 108-55 Input I.F. Transformer

These I.F. transformers have two adjustments, both of which are accessible from the underside of chassis (see bottom view).

1. With volume control full on, (the extreme right of its rotation), the wave changing switch in the broadcast position, (extreme left of its rotation), the tone control on "H," part of the sharp position (as much right rotation as possible without operating the Hi Fidelity switch), and with the variable condenser set to approximately 1400 kilocycles, make the following adjustments:
   (a) Connect external oscillator set at 465 kilocycles, in series with "Dummy 1", to the control grid cap of the type 6K7 tube, located between the two I.F. transformers, and adjust the output I.F. transformer to resonance.
   (b) With "Dummy 1" still connected, move oscillator output clip from grid of 6K7 to grid cap to 6L7 and adjust input I.F. transformer to resonance.
   (c) With oscillator still connected to 6L7, re-adjust output I.F. transformer.

ALIGNMENT PROCEDURE

The following adjustments to be made after the I.F.'s have been aligned as explained above.

BROADCAST BAND ALIGNMENT:

1. With wave changing switch in the broadcast position, extreme left of its rotation, and with external oscillator set at 600 kilocycles and connected in series with "Dummy 2" to the tan antenna and black ground lead, make the following adjustments:
   (a) Adjust broadcast series pad to resonance with oscillator. Keep set in tune with oscillator by slowly rocking to and fro the variable condenser until maximum output is obtained. Note: This adjustment is accessible from the top of the chassis and is located between the variable condenser and the electrolytic condenser. See top view.
   (b) Re-set external oscillator to 1400 K.C., move dial pointer to 1400 K.C. and adjust oscillator (adjustment number 3), R.F. (adjustment number 2) and antenna (adjustment number 1) to resonance. See bottom view for location of these adjustments.
   (c) Repeat adjustments "a" and "b" until sensitivity is at its maximum.

NOTE: IT IS EXTREMELY NECESSARY IN MAKING ALL OF THESE ADJUSTMENTS "HAT THE FUNDAMENTAL OSCILLATOR SIGNAL BE TUNED IN AND NOT THE IMAGE FREQUENCY WHICH WILL FALL BELOW THE FUNDAMENTAL.

SHORT WAVE BAND ALIGNMENT:

1. With wave changing switch in the short wave position, extreme right of its rotation, and with external oscillator set at 17 megacycles and connected in series with "Dummy 3" to the tan antenna and black ground lead, make the following adjustments:
   (a) Move dial pointer to 17 megacycles and adjust short wave oscillator (adjustment number 8), short wave R.F. (adjustment number 7) and short wave antenna (adjustment number 6) to resonance.
   (b) Re-set external oscillator to 6 megacycles and pick up signal by rotating variable condenser and check for sensitivity.

INTERMEDIATE BAND ALIGNMENT:

1. With wave changing switch in the intermediate wave position, center of its rotation, and with external oscillator set at 1800 K.C. and connected in series with "Dummy 3" to the tan antenna and black ground lead, make the following adjustments:
   (a) Rotate variable condenser to approximately 1800 K.C., tune in oscillator signal and adjust M.W. series pad (see top view) to resonance. Slowly rock condenser to and fro while making this adjustment to be sure maximum output is obtained.
   (b) Set external oscillator at 5 M.C., rotate condenser, pick up signal and adjust intermediate wave R.F. (adjustment number 5), intermediate wave antenna (adjustment number 4) and intermediate wave oscillator (adjustment number 9) to resonance.
   (c) Re-check broadcast alignment and if it is found necessary to re-adjust either R.F. or antenna trimmers, repeat the 17 M.C. short wave and 5 M.C. intermediate wave adjustments.

REPAIR PARTS LIST—MODEL 1070—SERIES A

REPAIR PARTS LIST—MODEL 1070—SERIES B

Part No.	DESCRIPTION	Circuit Diagram Reference	List Price Each
	CONDENSERS		
100-1	.1 x 400 Volt Tubular	C17, C19	$0.25
100-6	.25 x 200 Volt Tubular with Bracket	C2	.35
100-7	.006 x 600 Volt Tubular	C39	.25
100-8	.05 x 400 Volt Tubular	C1, C7, C10	.25
100-11	.01 x 400 Volt Tubular	C32	.25
100-13	.05 x 400 Volt Tubular	C15, C21	.25
100-20	.1 x 200 Volt Tubular	C5	.25
100-22	.05 x 200 Volt Tubular	C12, C13	.25
100-24	.25 x 400 Volt Tubular	C6	.35
100-32	.0005 x 1000 Volt Condenser	C31	.25
103-6	14 Mfd. x 400 Volt Electrolytic	C25	1.35
103-10	30 Mfd. x 450 Volt Electrolytic	C26	1.35
119-19	Dual 20 Mfd. x 25 Volt Electrolytic	C14, C18	1.25
119-23	25 mfd. x 25 Volt Electrolytic	C30	.75
129-5	.0005 Mica - Type MT - 20%	C11	.25
129-8	.00005 Mica - Type MT - 20%	C16	.25
129-21	.0003 Mica - Type MT - 20%	C4	.25
129-22	.0014 Mica - Type MW - 5%	C23	.25
129-28	.00004 Mica - Type MT - 5%	C22	.25
129-29	.0038 Mica - Type MW - 2½ %	C24	.50
129-30	.0014 Mica - Type MW - 20%	C3	.25
129-38	.00004 Mica - Type MT - 10%	C8, C9	.25
129-52	.000018 Mica - Type MT - 10%	C20	.25
	RESISTORS		
106-25	Metal Clad Resistor	R19, R23	.50
130-3	500M Ohm - ½ Watt - 20% - 100 Volt Carbon	R8, R17, R18	.20
130-9	800M Ohm - ½ Watt - 20% - 28 Volt Carbon	R22	.20
130-11	250M Ohm - ½ Watt - 20% - 50 Volt Carbon	R13	.20
130-20	100M Ohm - ½ Watt - 20% - 50 Volt Carb R2, R12, R15, R16		.20
130-21	20M Ohm - ½ Watt - 20% - 20 Volt Carbon	R23, R25	.20
130-42	5M Ohm - ½ Watt - 20% - 10 Volt Carbon	R9	.20
130-55	10M Ohm - ½ Watt - 20% - 50 Volt Carbon	R14	.20
130-49	1½M Ohm - ½ Watt - 20% - 150 Volt Carbon	R4	.20
130-52	50M Ohm - ½ Watt - 20% - 10 Volt Carbon	R6	.20
130-53	100 Ohm Watt—20%	R5	.20
130-56	500 Ohm - ½ Watt - 20% - 10 Volt Carbon	R3	.20
130-60	100 Ohm - ½ Watt - 20% - 10 Volt Carbon	R1	.20
130-85	2M Ohm - ½ Watt - 20% - 10 Volt Carbon	R20	.20
130-86	10M Ohm - 2 Watt - Wire Wound	R7	.40
130-110 1	Megohm—1/10 Watt—10%—100 Volt Carbon	R24	.20
130-126 3	Megohm—1/10 Watt—20%—100 Volt Carbon	R26	.20
130 127 4	Megohm—1/10 Watt—20%—100 Volt Carbon	R27	.20
	COILS		
108-56	Input I.F. Coil Assembly Complete—Less Can	T7	2.50
108-68	Output I.F. Coil Assembly Complete—Less Can	T8	1.50
109-24	Broadcast R.F. Coil Assembly Complete—Less Can	T3	.50
109-26	Mid-Wave & Short Wave R.F. Coil Assembly Complete—Less Can	T4	1.50
110-32	Broadcast Oscillator Coil Assembly Complete—Less Can	T5	.50
110-38	Mid-Wave & Short Wave Oscillator Coil Assembly Complete—Less Can	T6	1.40
111-39	Mid-Wave & Short Wave Antenna Coil Assembly Complete—Less Can	T2	1.00
111-40	Broadcast Antenna Coil Assembly Complete—Less Can	T1	.75
	TRANSFORMERS		
106-43	50/60 Cycle Power Transformer		5.00
106-48	25 Cycle Power Transformer		7.00
104-46	Universal - 25 Cycle Primary		8.00
104-47	Universal - 40 Cycle Primary		7.50
104-50	50/60 Cycle - Special 1250 Volt Power Transformer		7.00
	SOCKETS		
121-4	Five Prong Socket - "Speaker"		.10
121-12	Seven Prong Socket - "6K7"		.15
121-14	Seven Prong Socket - "6F8"		.15
121-16	Five Prong Socket - "6Z4"		.10
121-17	Six Prong Socket - "6Q5"		.15
121-18	Seven Prong Socket - "6L7"		.15
121-19	Seven Prong Socket - "6H6"		.15
	SPEAKER		
114-28	Twelve Inch Dynamic (Field 1550 Ohm)	L	10.00
	MISCELLANEOUS		
101-36	Volume Control and Switch (1 Meg. Ohm)	R11	1.35
101-40	Tone Control and Fidelity Switch (1M Ohm)	R30	1.35
104-28	Three Gang Variable Condenser		5.00
107-5	Line Cord and Plug		.50
115-35	Antenna, Oscillator & R. F. Shield		.15
115-36	I.F. Shield		.15
106-17	Audio Transformers	T9	1.85
124-27	J-8-4-D Series Dual Pad	C27, C28	.60
125-16	Wave Change Switch	S	.90
118-47	Fuse Clip Assembly		.15
158-51	Wood Knob with Spring		.15
121-34	2 Amp. Fuse - Type 3AG		.10
	CATHODE-RAY TUNING INDICATOR PARTS		
107-18	Cable and Socket Assembly		$0.75
113-158	Metal Oval Escutcheon		.25
111-67	Holder and Clamp		.15
130-114	1 Meg. Ohm—1/1 Watt—10%—100 Volt Carbon		.20
	ASSEMBLIES		
118-133	Belt Take-up Assembly—Including:		.35
	1—No. 117-18 Take-up Arm		
	1—No. 117-31 Take-up Pulley		
	1—No. 117-34A Stud for Above		
	1—No. 117-22A Stud		
	1—No. 131-26 Spring Washer		
	2—No. 134-2 Horse Shoe Washer		
118-136	Switch Assembly—Including:		.60
	2—No. 117-16 Band Indicator Arm		
	1—No. 117-15 Link		
	1—No. 117-14 Elbow		
	1—No. 117-13 Link		
	2—No. 109-5 Rivets		
	2—No. 131-20 Spring Washer		
	1—No. 117-23A Threaded Stud		
	1—No. 117-23A Stud		
	Red Cellulose		
118-135	Volume Indicator Assembly—Including:		.75
	1—No. 118-132 Pointer Disc		
	1—No. 117-26 Bushing		
	1—No. 130-5A Spring Clip		
	1—No. 130-7 Coil Spring		
	No. 130-11 Fish Line		
	1—No. 117-25 Pulley		
	No. 134-3 Set Screw		
	K Red Cellulose		
	1—No. 134-9 Horse Shoe Washer		
118-138	Tone Indicator Assembly—Including:		.75
	1—No. 118-132 Pointer Disc		
	1—No. 117-26 Bushing		
	1—No 130-5A Spring Clip		
	1—No. 130 7 Coil Spring		
	No. 130-2 Fish Line		
	1—No. 117-25 Pulley		
	1—No. 134-2 Red Cellulose		
118-137	Dial Plate Assembly—Including:		1.35
	1—No. 117-17 Dial Plate		
	1—No. 117-11 Dial Bracket		
	4—No. 109-4 Rivets		
	2—No. 117-25A Volume & Tone Indicator Studs		
	1—No. 117-19 Bushing for Tuning Shaft		
	No. 134-9 Horse Shoe Washer		
118-134	Switch Arm Assembly—Including:		.25
	1—No. 117-12 Switch Arm		
	1—No. 117-35 Bushing		
	2—No. 132-18 Set Screw		
	DIAL PARTS ONLY		
	118-117A Tuning Shaft		.05
	118-116 Metal Oval Escutcheon Only		1.25
	118-118 Dial Pointer with No. 132-8 Screw		.50
	118-126 Semi Spread Pointer Disc		.10
	118-122 Oval Glass Crystal Only		.25
	118-124 Glass Dial Scale		1.25
	118-128 Drive Belt		.25
	118-126 Pilot Light Socket		.10
	118-127 Pilot Light Socket		.10
	118-129 Oval Glass Retaining Ring		.10
	107-14 6-8 Volt, T-46 Pilot Light		.15
	117-20A Drive Belt Pulley		.10
	117-28 Background Plate (Specify if Blue or Brown Desired)		.25
	117-30 Reflector Plate		.25
	129-4 Drive Belt Take-up Coil Spring		.05
	131-38 Glass Retaining Clips		.005

©John F. Rider, Publisher

Fig. 1—Schematic Circuit Diagram

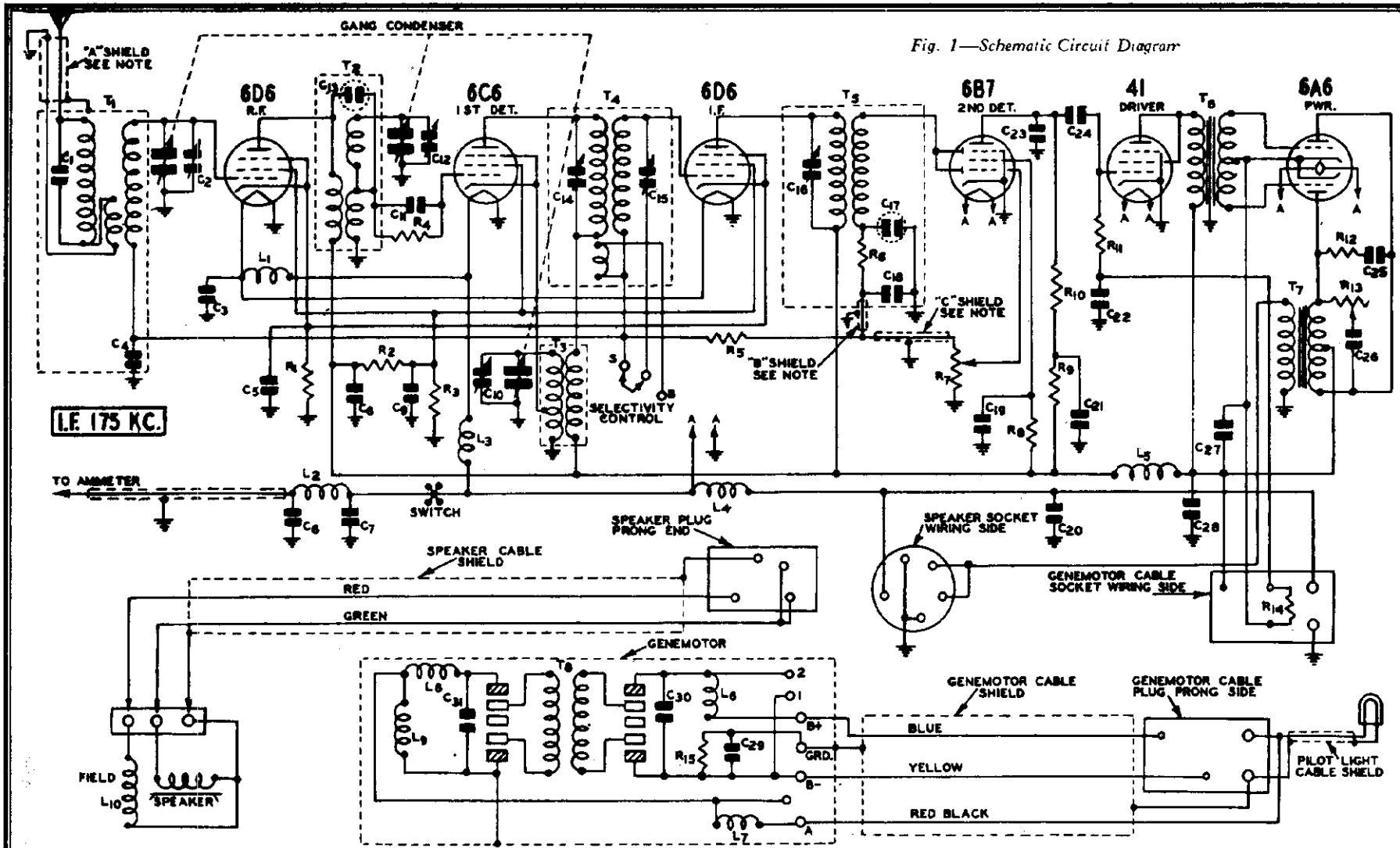

CIRCUIT ELEMENTS ENCLOSED IN DOTTED CIRCLES DO NOT EXIST AS DISTINCT UNITS BUT OCCUR AS A RESULT OF THE MUTUAL POSITION OF OTHER CIRCUIT ELEMENTS OR THEIR PARTS.
"B" & "S" ON SELECTIVITY CONTROL DENOTES BROAD AND SHARP RESPECTIVELY.
THE CAPACITY OF "A" SHIELD IS 106 MMF, THE CAPACITY OF "B" SHIELD IS 16 MMF & THE CAPACITY OF "C" SHIELD IS 20 MMF.

C 1	500 mmf.	C11	35. mmf.	C21	.25 mf. 360 V.	C31	.50 mf. 180 V.	R 8	250000 ohm .5 W.	T1	Antenna R. F. Trans.
C 2	Gang Trimmer	C12	Gang Trimmer	C22	.10 mf. 180 V.			R 9	20000 ohm .2 W.	T2	Interstage R. F. Trans.
C 3	2000 mmf.	C13	40. mmf.	C23	250. mmf.	R 1	260 ohm .2 W.	R10	50000 ohm .5 W.	T3	Oscillator Coil
C 4	.05 mf. 180 V.	C14	150-250 mmf.	C24	.01 mf. 360 V.	R 2	17000 ohm 1.0 W.	R11	500000 ohm .2 W.	T4	1st I. F. Trans.
C 5	.10 mf. 180 V.	C15	150-250 mmf.	C25	.01 mf. 600 V.	R 3	20000 ohm .5 W.	R12	15000 ohm 1.0 W.	T5	2nd I. F. Trans.
C 6	2000 mmf.	C16	70-150 mmf.	C26	.04 mf. 600 V.	R 4	500000 ohm .2 W.	R13	150000 ohm Tone Control	T6	Input Trans.
C 7	.50 mf. 180 V.	C17	100. mmf.	C27	8.0 mf. 450 V. } Electro-	R 5	1.0 Megohm .2 W.	R14	100000 ohm .2 W.	T7	Output Trans.
C 8	.10 mf. 360 V.	C18	50. mmf.	C28	8.0 mf. 450 V. } lytic	R 6	50000 ohm .2 W.	R15	900 ohm 1.5 W. Armored Wire Wound	T8	Armature Windings
C 9	.10 mf. 180 V.	C19	.25 mf. 360 V.	C29	.25 mf. 180 V.	R 7	500000 ohm Vol. Control			L 1	"A" Reactor

L 2	"A" Reactor
L 3	"A" Reactor
L 5	"B" Reactor
L 4	"A" Reactor
L 6	"B" Reactor
L 7	"A" Reactor
L 8	Series Field Winding
L 9	Shunt Field Winding
L10	Speaker Field 4.0 Ohms

MODEL 6-Q
Voltage, Resistances
Socket, Trimmers
Transformer Data

CADILLAC

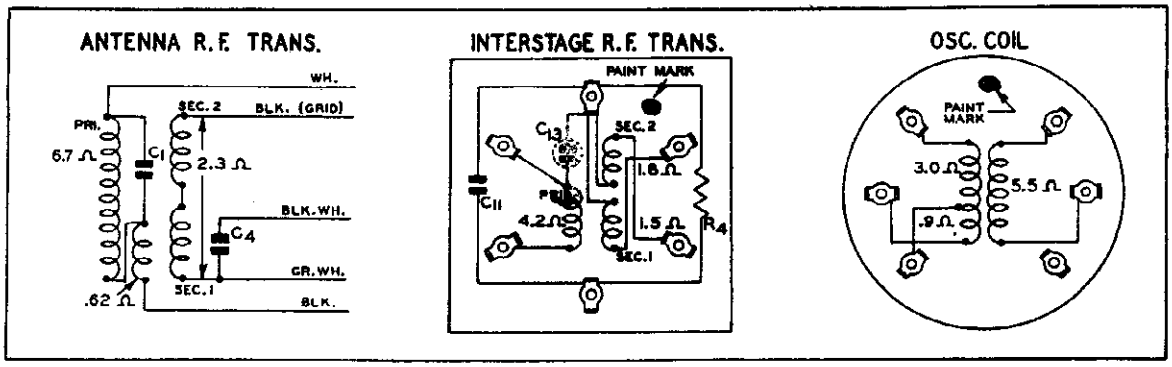

Fig. 2—R. F. and Oscillator Coil Base Terminal Arrangement and D. C. Resistance of Windings

D. C. Resistance of Windings

Following are the D. C. resistances of the various windings in the chassis. The values given below will vary slightly in different sets.

Part No.	Winding	Code	D. C. Resistance in Ohms
P-9A463	Antenna R.F. Transformer	T1	
	Primary Winding		6.7
	Coupling Winding		.62
	Secondary Winding		2.3
P-9A464	Interstage R.F. Transformer	T2	
	Primary Winding		4.2
	Secondary No. 1		1.5
	Secondary No. 2		1.8
P-9A465	Oscillator Coils	T3	
	Grid Coil		
	Long Portion		3.0
	Short Portion		.9
	Plate Coil		5.5
P-9A466	1st I.F. Transformer	T4	
	Primary Winding		61.5
	Coupling Winding		5.0
	Secondary Winding		60.0
P-9A467	2nd I.F. Transformer	T5	
	Primary Winding		48.15
	Secondary Winding		48.10
P-50X29	Input Transformer	T6	
	Primary Winding		1300.0
	Secondary Winding		
	Center Tap to Inside		60.8
	Center Tap to Outside		68.0
P-51X39	Output Transformer	T7	
	Primary Winding		
	Center Tap to Inside		115.0
	Center Tap to Outside		129.0
	Secondary Winding		.14
P-9A473	"A" Reactor	L1	Small
P-9A471	"A" Reactor	L2	Small
P-9A468	"A" Reactor	L3	0.2
	"B" Reactor	L5	4.4
P-9A472	"A" Reactor	L4	Small
P-9A470	"B" Reactor	L6	4.2
P-9A469	"A" Reactor	L7	Small
P-12A228	Dynamic Speaker		
	Speaker Field	L10	4.0
	Speaker Voice Coil		1.5

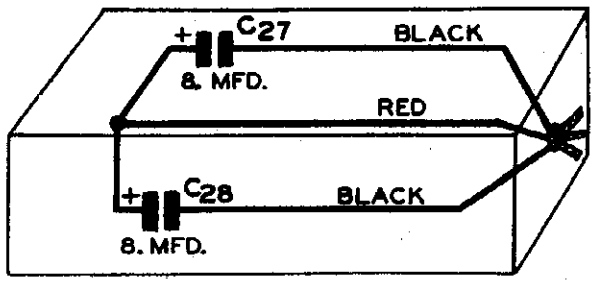

Fig. 3—Condenser Block—Internal Wiring

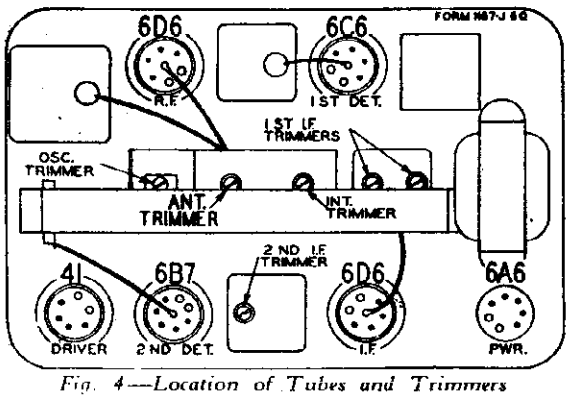

Fig. 4—Location of Tubes and Trimmers

Genemotor Assembly

The genemotor assembly contains all of the parts shown within the dotted lines in Fig. 1. We do not recommend that the genemotor itself be serviced in the field. The filter unit associated with the genemotor may be checked and any defective parts repaired or replaced. However, if the genemotor itself is at fault, it should be sent back to the factory for repair.

VOLTAGES AT SOCKETS

Antenna Disconnected **Battery 6 Volts Under Load**

Type of Tube	Function	Across Heater	Plate to Ground	Screen to Ground	Cathode to Ground	Cathode Current M. A.
6D6	R. F.	5.6	235	110	4.5	6.9
6C6	1st Det. and Osc.	5.6	235	110	0	2.8
6D6	I. F.	5.6	235	110	4.5	6.9
6B7	2nd Det. & 1st A. F.	5.7	55(1)	45(1)	0	3.2
41	Driver	5.7	225	225	-32(2)	7.0
6A6	Output	5.7	225		-32	23.0

Speaker Field - - - 1.4 Amp. **Genemotor - - - - 4.8 Amp.**
Chassis - - - - - - 2.85 Amp. **Pilot Lamp - - - - 0.15 Amp.**

(1) Measured on 500 Volt Scale (1000 ohms per volt).
(2) Grid bias - Measured at genemotor cable socket.

©John F. Rider, Publisher

©John F. Rider, Publisher

MODEL 6-Q
Circuit Data, Trouble Shooting
Alignment

SPECIFICATIONS

Power Consumption - - 9.0 Amperes at 6 Volts	Sensitivity - - - - - 1.0 Microvolt Absolute
Power Output - - - - 5.5 Watts at 6 Volts	Tuning Frequency Range - - - 530 to 1650 KC
9.0 Watts at 7.5 Volts	Intermediate Frequency - - - - - - - 175 KC
Selectivity - 28 KC Broad at 1000 Times Signal (Sharp)	Speaker - - - - - - - 8 or 10 Inch Dynamic

Circuit

This model is a 6 tube automobile receiver covering the standard wave band. It has a tuning range as shown in the specifications above. The signal is fed through an antenna transformer with tuned secondary into a 6D6 tube which functions as an R.F. amplifier. The output of this tube is fed through another R.F. transformer with tuned secondary into a 6C6 tube which functions as the first detector and oscillator. The oscillating circuit is tuned by the oscillator section of the gang condenser and is always resonant at a frequency 175 KC above the frequency to which the R.F. circuits are tuned.

One stage of I.F. amplification is employed using a 6D6 tube. The primary and secondary of the first I.F. transformer and the primary of the second I.F. transformer are tuned by small trimmer condensers.

Referring to the 1st I.F. transformer T4 in Fig. 1 it will be noted that there is a coupling winding shown below the primary.

When the expander (selectivity control) is in the sharp position, the coupling winding is open circuited and the loose coupling which exists between the primary and secondary of this transformer results in high selectivity.

When the expander is in the broad position, the coupling winding which is wound under the primary is connected in series with the secondary. This provides overcoupling which results in a greatly widened resonance curve. Passage of a wide range of audio frequencies is thus obtained.

A 6B7 duo diode-pentode tube functions as a diode 2nd detector, A.V.C. tube and a one stage audio amplifier. A.V.C. voltage is applied to the control grid circuits of the 6D6 R.F. and I.F. tubes. The manual volume control varies the audio voltage applied to the grid of the 6B7 tube.

Resistance coupling is used between the 1st audio stage and the driver stage which employs a 41 tube. The latter is transformer coupled to the output stage which uses a 6A6 tube. This tube is a Class "B" power amplifier and combines 2 triodes in one envelope. A dynamic reproducer is used.

Current for the receiver is obtained from the car storage battery. A genemotor supplies the high voltage required for the plate and screen circuits.

Alignment Procedure

I. F. Adjustment

Set the signal generator for a signal of 175 KC.

Connect the output of the signal generator through a .1 mf. condenser to the stator of the interstage section of the tuning condenser—see Fig. 4 for the location of this condenser. This can be done by connecting a lead to the lug on the top of this stator.

Connect the ground lead of the signal generator to the chassis ground.

Short out the oscillator section of the tuning condenser.

Turn the expander to the sharp position and keep it in this position for all adjustments.

Set the volume control at the maximum position.

Attenuate the signal from the signal generator to prevent the levelling-off action of the A.V.C.

Then adjust the three I.F. trimmers until maximum output is obtained. The location of these trimmers is shown in Fig. 4.

1650 KC. Adjustment

Set the signal generator for 1650 KC.

Turn the rotor of the tuning condenser to the full open position.

Connect the shielded antenna lead from the chassis through a 110 mmf. condenser to the antenna post of the signal generator.

For this and all subsequent adjustments keep the volume control at the maximum position and attenuate the signal from the signal generator to prevent A.V.C. action.

Adjust the trimmer of the oscillator section of the three gang condenser until maximum output is obtained—see Fig. 4 for location of this trimmer.

1400 KC. Adjustment

Set the signal generator for 1400 KC.

Turn the rotor of the tuning condenser carefully until maximum output is obtained.

Adjust the interstage and antenna trimmers for maximum output—see Fig. 4.

Do not change the setting of the oscillator trimmer.

Adjusting Antenna Trimmer

After the receiver is installed and the car antenna is connected it will be necessary to adjust the antenna trimmer. Tune in a weak signal between 1200 and 1400 KC. with the volume control about three-fourths on. Remove the cover of the chassis case. The antenna trimmer is on the center tuning condenser section—see Fig. 4. Turn the adjusting screw of this condenser up or down until maximum output is obtained. CAUTION—Do not turn any of the other trimmer adjusting screws for this adjustment.

NOTICE—A change has been made in our parts numbering system. Old parts which are used in new receivers will have a new number assigned to them. For your convenience we are listing below all of the new part numbers and the corresponding old part number, should there be one. **Order by new part number only.**

There is a large letter on the chassis which identifies the set as to major part changes. When ordering parts please be sure to mention the series number and this large letter.

MISCELLANEOUS

New Part No.	Old Part No.	Description
P-3A113	1885	Type 6D6 Tube Socket
P-3A114	1886	Type 6C6 Tube Socket
P-3A120	1944	Type 6B7 Tube Socket
P-3A116	1911	Type 41 Tube Socket
P-3A205		Type 6A6 Tube Socket
P-3A58	1637	5 Prong Speaker Socket (Marked "SPK")
P-3A218		5 Prong Genemotor Socket (Marked "GEN")
P-3A219		3 Prong Antenna Socket (Marked "ANT")
P-32X30	40424	Tube Shield Bases
P-32X58		Tube Shields
P-10A62		Knobs on Chassis
P-2X210		Felt Washers (used with above Knobs)
P-2A51		Expander Switch
P-4A38	2106	Single Lug Terminal Strip (Mounting Foot to Left of Lug)
P-4A57		Two Lug Insulated Terminal Strip
P-25X266		Tone Control and Expander Switch Mounting Bracket
P-32X245		"A" Cable—Chassis Section
P-30X14	30342	Grid Clip Only

GENEMOTOR AND PARTS

New Part No.	Code	Description
P-22A204		Genemotor Assembly complete with Case, Cover and Filter Unit
P-22A205		Genemotor with Case and Cover, Less Filter Unit
P-46X168	C30	0.45 mf; 180 volt; Tubular Condenser
P-46X169	C30	0.1 mf; 360 volt; Tubular Condenser
P-46X164	C29	0.25 mf; 180 volt; Tubular Condenser
P-43X54	R15	900 ohms; 1.5 watts, Armored Wire Wound Resistor
P-9A469	L2	"A" Choke Coil
P-9A470	L6	"B" Choke Coil

INSTALLATION ITEMS

This receiver was three types of Speaker Mountings. The complete Assembly with Roof Mounting Speaker is the 80Q1 with Flat Dash Mounting 80Q2 and with End Dash Mounting 80Q3. Some of the following parts are common to all three Mountings. Others which are so designated apply only to one or two mountings.

CABLE ASSEMBLIES

New Part No.	Old Part No.	Quan. Used	Description
†P-13X244		1	Antenna Cable
†P-13X242		1	Ammeter Cable
†P-13X246		1	Shielded Genemotor and Pilot Light Cable Assembly—less Pilot Light Bulb
P-13X243		1	Shielded Speaker Cable and Plug Assembly —Roof Mtg. 80Q1
P-13X247		1	Shielded Speaker Cable and Plug Assembly—80Q2 and 80Q3 Flat & End Dash Mounting
†P-16X14	1883	1	20 Ampere Fuse
†P-7A32		1	Pilot Light Bulb Only

SPEAKER ASSEMBLIES

New Part No.	Old Part No.	Description
		80Q1—Roof Mounting
P-12A228		8" Roof Mounting Dynamic Speaker less Bezel
P-17X10		Speaker Bezel only
		80Q2—Flat Dash Mounting
P-8A6		Speaker and Case Assembly Complete
P-12A201		10" Dynamic Speaker only
P-14X201		Speaker Case
P-14X18	20801	Speaker Screen
P-6X201		5 Prong Cable Plug
		80Q3—End Dash Mounting
P-8A16		Speaker and Case Assembly Complete
P-12A212		10" Dynamic Speaker only
P-14X204		Speaker Case Including Back
P-14X18	20801	Speaker Screen
P-25X118	20799	Speaker Mounting Bracket
P-6A201		5 Prong Pin Plate

TRANSFORMERS AND COILS

New Part No.	Code	Description
P-9A463	T1	Antenna R.F. Transformer & Can Assembly
P-9A464	T2	Interstage R.F. Transformer & Can Assembly
P-9A465	T3	Oscillator Coil & Can Assembly
P-9A466	T4	1st I.F. Transformer & Can Assembly
P-9A467	T5	2nd I.F. Transformer & Can Assembly
P-54X2	T6 & T7	Audio Input and Output Transformer Assembly Complete
P-9A468	L3	"A" Reactor (one assembly)
	L5	"B" Reactor (one assembly)
P-9A471	L2	"A" Line Reactor (on Ammeter Side of On Off Switch)
P-9A469	L7	"A" Reactor in Genemotor Unit
P-9A470	L6	"B" Reactor in Genemotor Unit
P-9A473	L1	"A" Filament Reactor between R.F. and 1st Det.
P-9A472	L4	"A" Line Reactor (on Chassis Side of On-Off Switch)

RESISTORS

New Part No.	Code	Resistance	Wattage	Type
P-A94261	R1	360 Ohms	0.2	Carbon
P-C94173	R2	17,000 Ohms	1.0	Carbon
P-B94203	R3	20,000 Ohms	0.5	Carbon
P-A94504	R4	500,000 Ohms	0.2	Carbon
P-A95105	R5	1.0 Megohm	0.2	Carbon
P-A95503	R6	50,000 Ohms	0.2	Carbon
P-36X314	R7	500,000 Ohms		Volume Control and Switch
P-B94254	R8	250,000 Ohms	0.5	Carbon
P-A95203	R9	20,000 Ohms	0.2	Carbon
P-B94303	R10	50,000 Ohms	0.5	Carbon
P-A95504	R11	500,000 Ohms	0.2	Carbon
P-C94153	R12	15,000 Ohms	1.0	Carbon
P-40X210	R13	150,000 Ohms		Tone Control
P-A95104	R14	100,000 Ohms	0.2	Carbon
P-40X54	R15	900 Ohms	1.5	Armored Wire Wound

CONDENSERS

New Part No.	Code	Capacity	Voltage	Type
P-49X54	C1	500 mmf.		Moulded
	C2	Antenna Trimmer		Part of Gang Condenser
P-47X41	C3	2800 mmf.		Moulded
P-46X80	C4	0.05 mf.	180	Tubular
P-49X4	C5	0.10 mf.	180	Multiple Tubular
	C9	0.10 mf.	180	
P-47X41	C6	2800 mmf.		Moulded
P-46X166	C7	0.50 mf.	180	Tubular
P-46X163	C8	0.10 mf.	360	Tubular
	C10	Oscillator Trimmer		Part of Gang Condenser
P-49X53	C11	35 mmf.		Moulded
	C12	Interstage Trimmer		Part of Gang Condenser
	C13	40 mmf.		Integral Part of Interstage Transformer Assembly
P-17A39	C14	150-250 mmf.		1st I.F. Trimmer Condensers
	C15	150-250 mmf.		
P-17A40	C16	70-130 mmf.		2nd I.F. Primary Trimmer
	C17	100 mmf.		Integral Part of 2nd I.F. Transformer Assembly
P-47X56	C18	50 mmf.		Moulded
P-49X5	C19	0.25 mf.	360	Multiple Tubular
	C21	0.25 mf.	360	
P-46X155	C20	0.50 mf.	180	Tubular
P-46X98	C22	0.10 mf.	180	Tubular
P-47X65	C23	250 mmf.		Moulded
P-46X120	C24	0.02 mf.	360	Tubular
P-49X6	C25	0.01 mf.	600	Multiple Tubular
	C26	0.04 mf.	600	
	C27	8.0 mf.	450	Dry Electrolytic
P-45X298	C28	8.3 mf.	450	
P-46X164	C29	0.25 mf.	180	Tubular
P-46X165	C30	0.10 mf.	360	Tubular
P-46X168	C31	0.45 mf.	180	Tubular

GENERAL ITEMS

P-25X202	2	Genemotor Mounting Bracket
	3	10-32 x ¾" Round Head Machine Screws—to secure above bracket to Genemotor
	3	No. 10 Split Lockwashers for use with above Mounting Screws
	3	No. 10 Plain Washers for use with above Mounting Screws
	4	8-32 x ⅝" Round Head Machine Screws—to secure Genemotor Cover to Case
	4	No. 8 Split Lockwashers for use with above 8-32 Screws
P-30X94	1	Double End Bolt to Mount Chassis to Dash
	1	⅜"-24 Hexagonal Nut—Used with Double End Bolt
	1	⅜"-24 Spring Lock Nut—Used to Lock above Nut on Mounting Bolt
	1	⅜" Shakeproof Lockwasher (External-internal Teeth) Used with Double End Bolt
	1	Flat Washer (2" O.D. x ⅜" I.D. x 3/32")

Common in all mountings

MODEL 202
Schemati
Voltage

CAPEHART CORPORATION

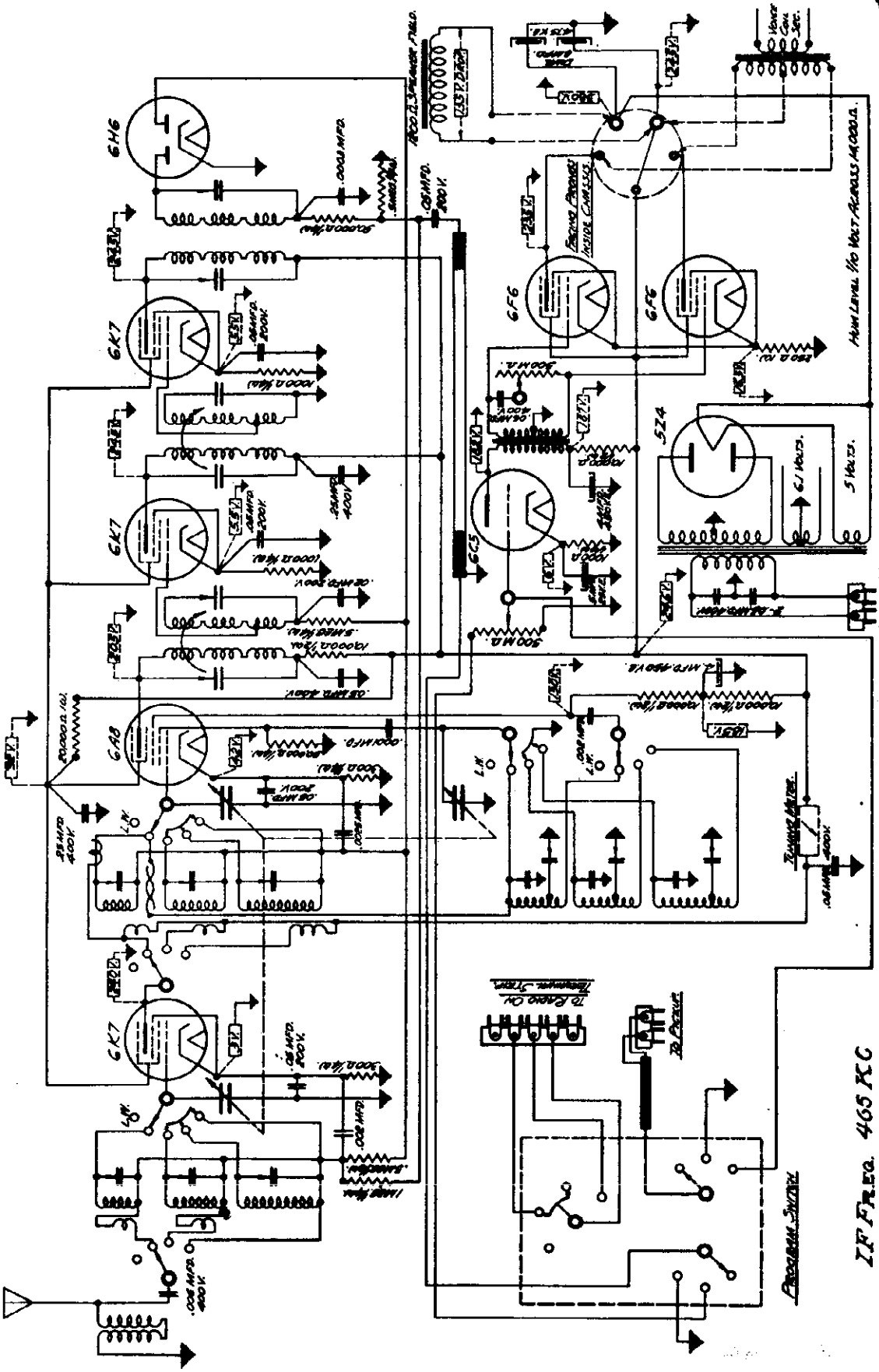

W-864
OCT. 14, 1948

• SCHEMATIC No. 1 RADIO DIAGRAM FOR CAPEHART 202 MODEL •

IF FREQ. 465 KC

©John F. Rider, Publisher

MODEL 203
Amplifier and Power Pack Schematic

CAPEHART CORPORATION

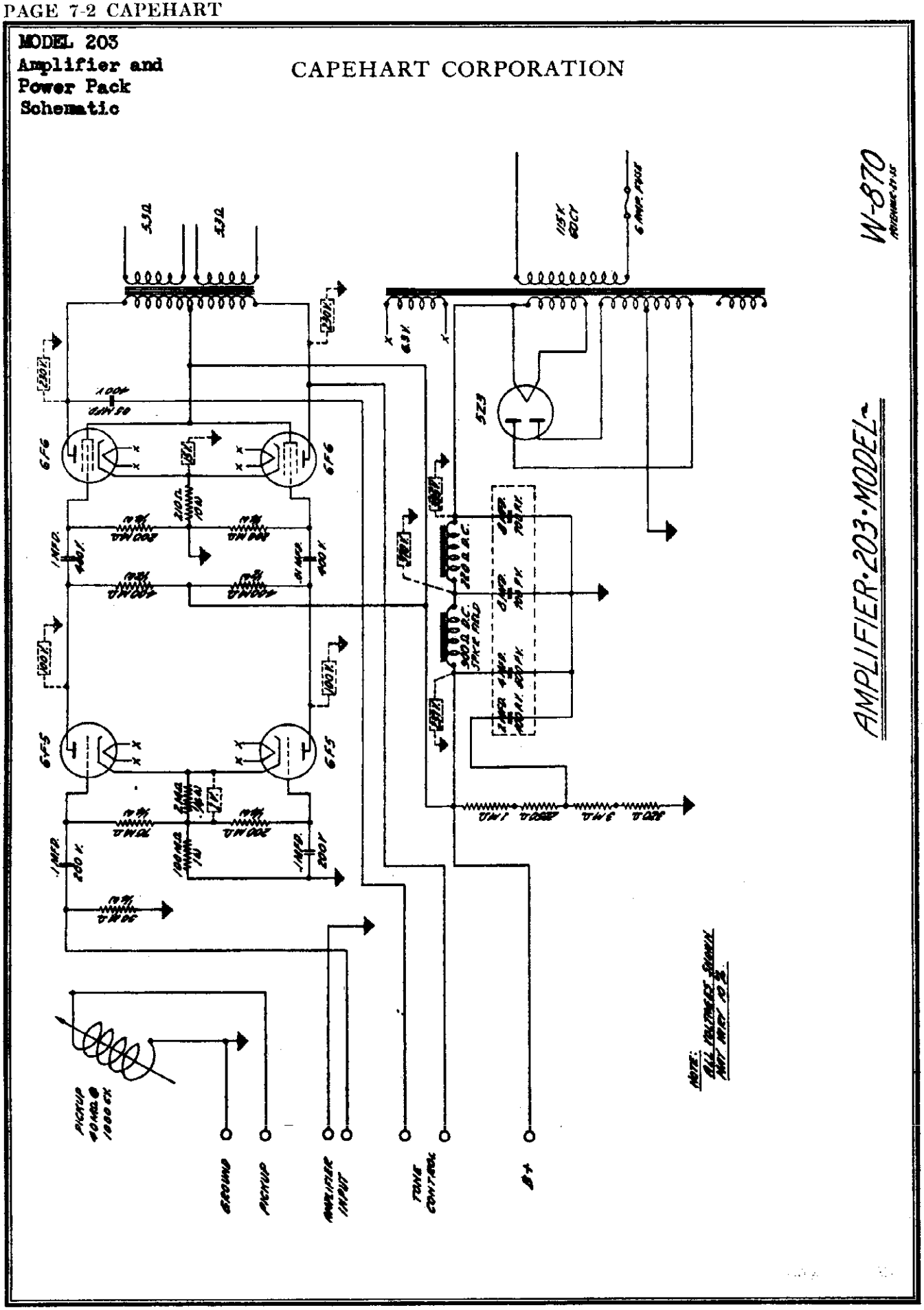

©John F. Rider, Publisher

CAPEHART CORPORATION

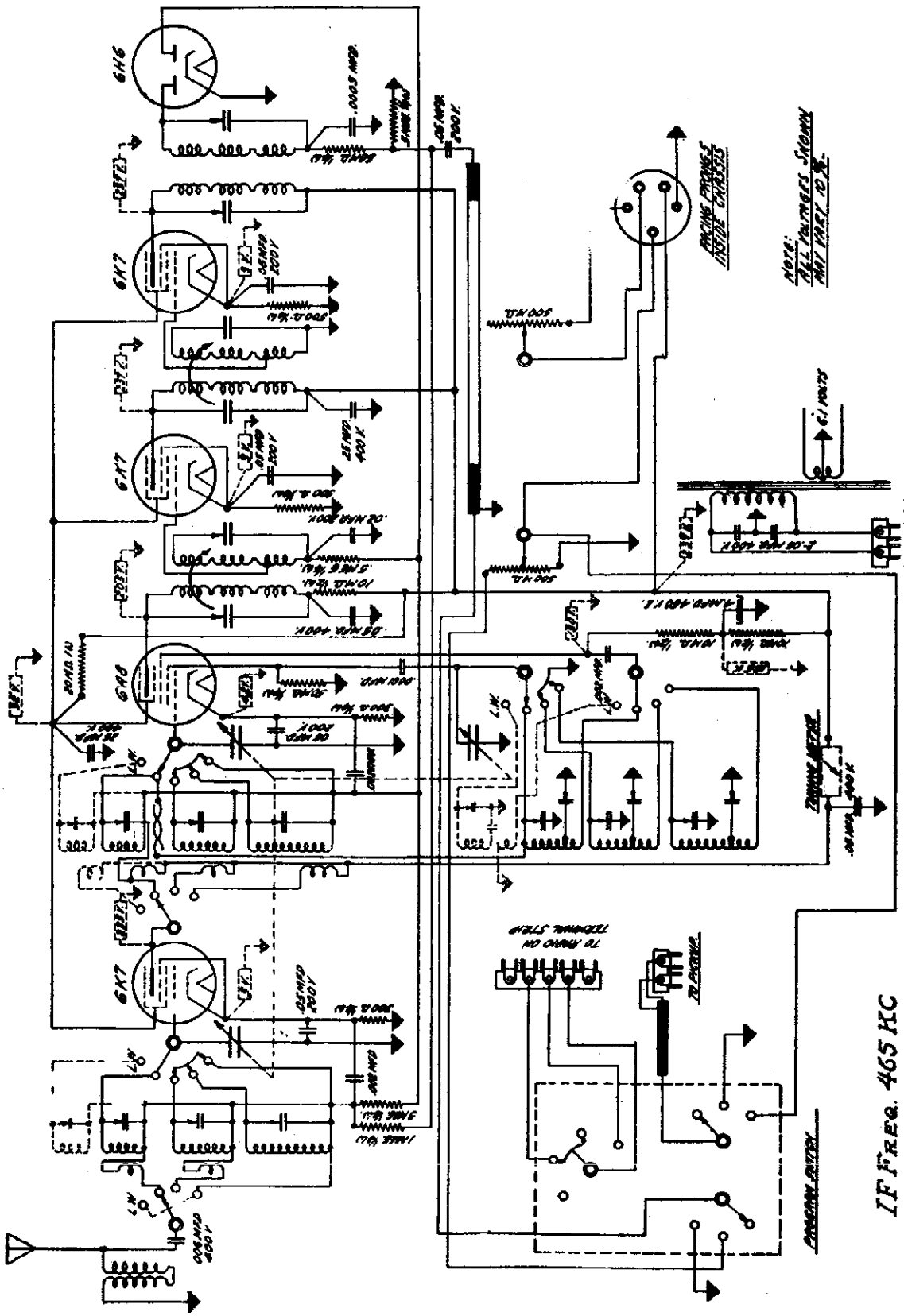

©John F. Rider, Publisher

MODEL 400-D Tuner
Schematic, Voltage

CAPEHART CORPORATION

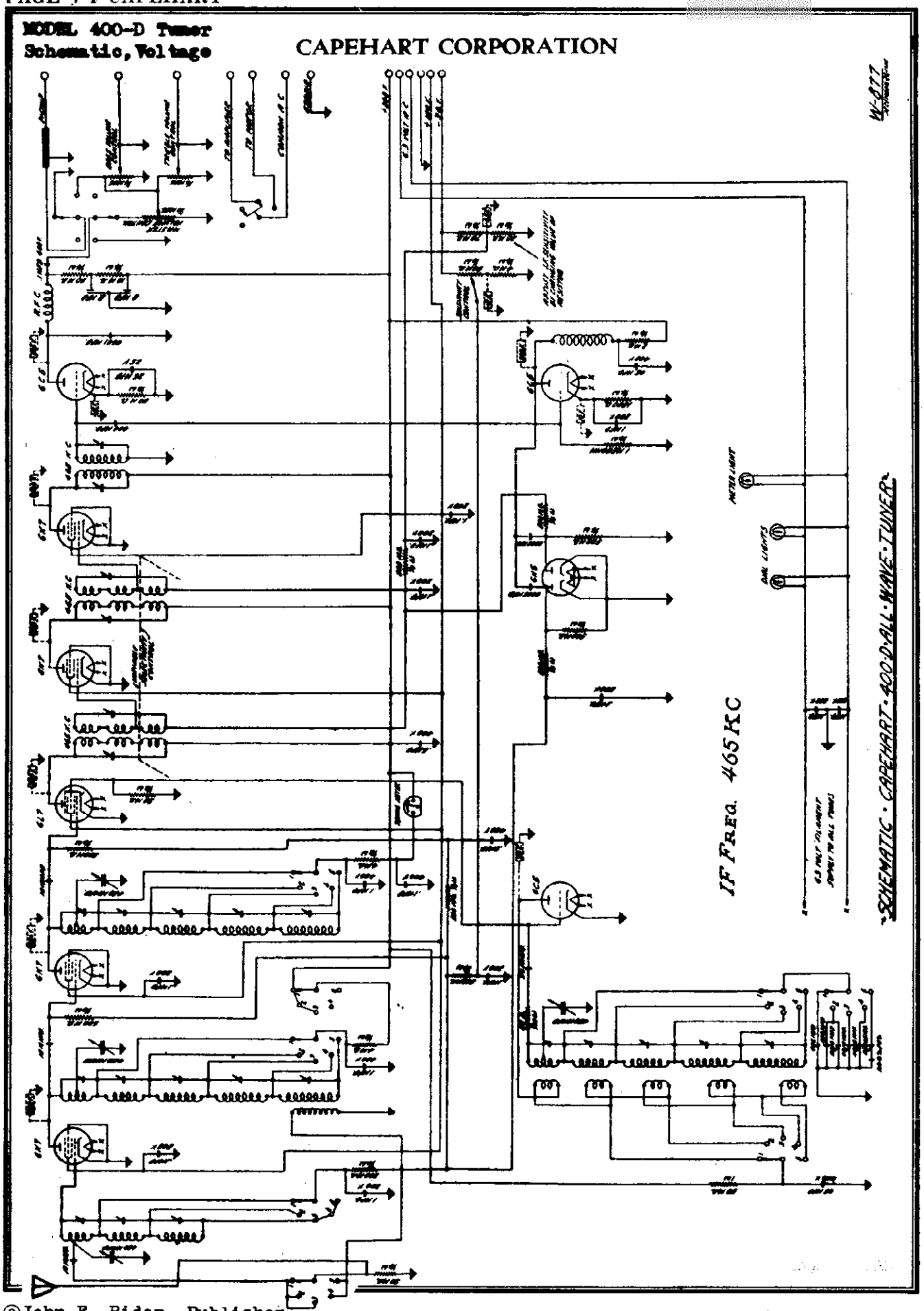

©John F. Rider, Publisher

CAPEHART CORPORATION

MODEL 400-D
Bass Amplifier
Schematic, Voltage

W-867

AMPLIFIER (BASS) 400-D SERIES

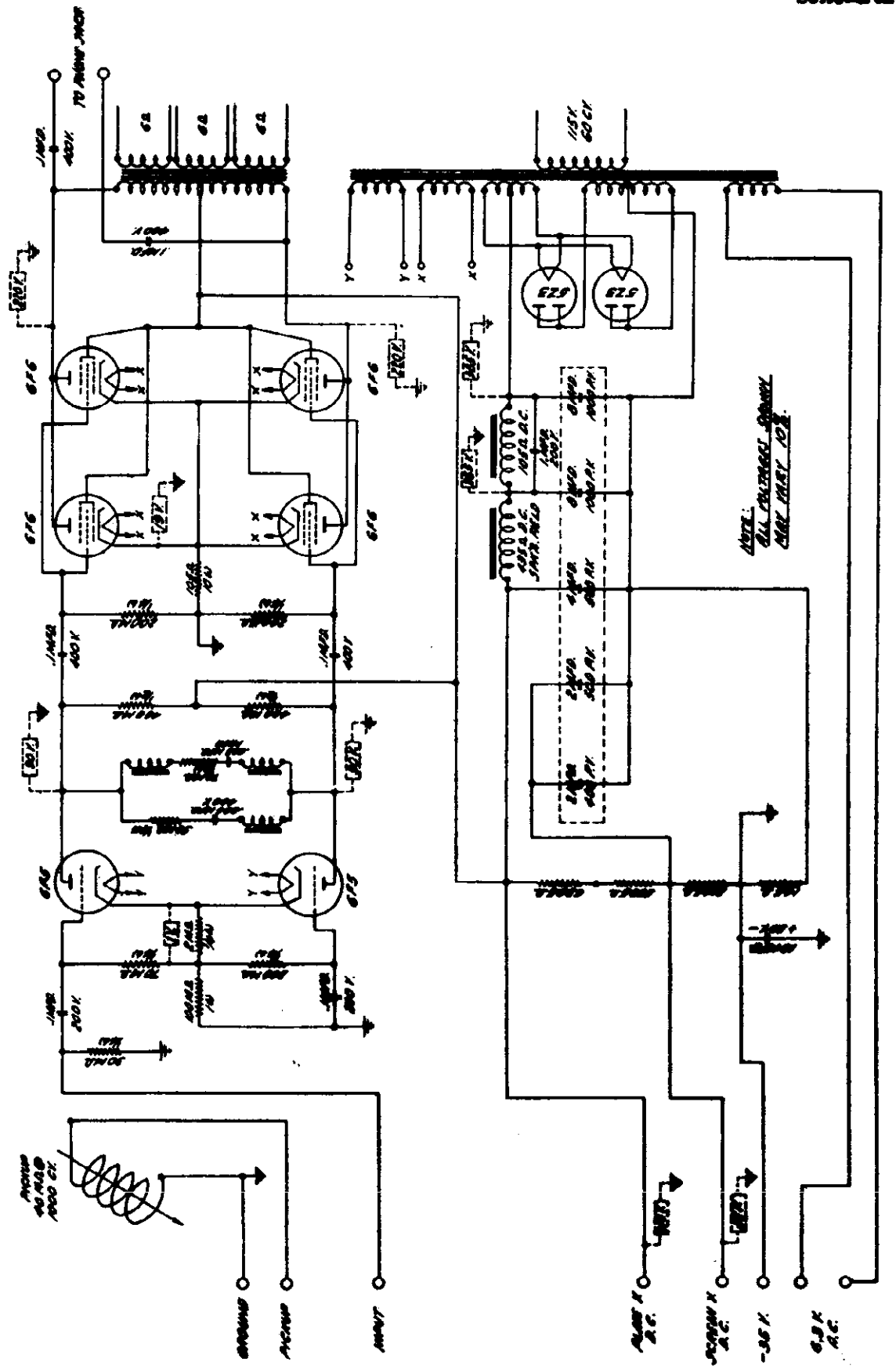

©John F. Rider, Publisher

MODEL 400-D
Treble Amplifier
Schematic, Voltage

CAPEHART CORPORATION

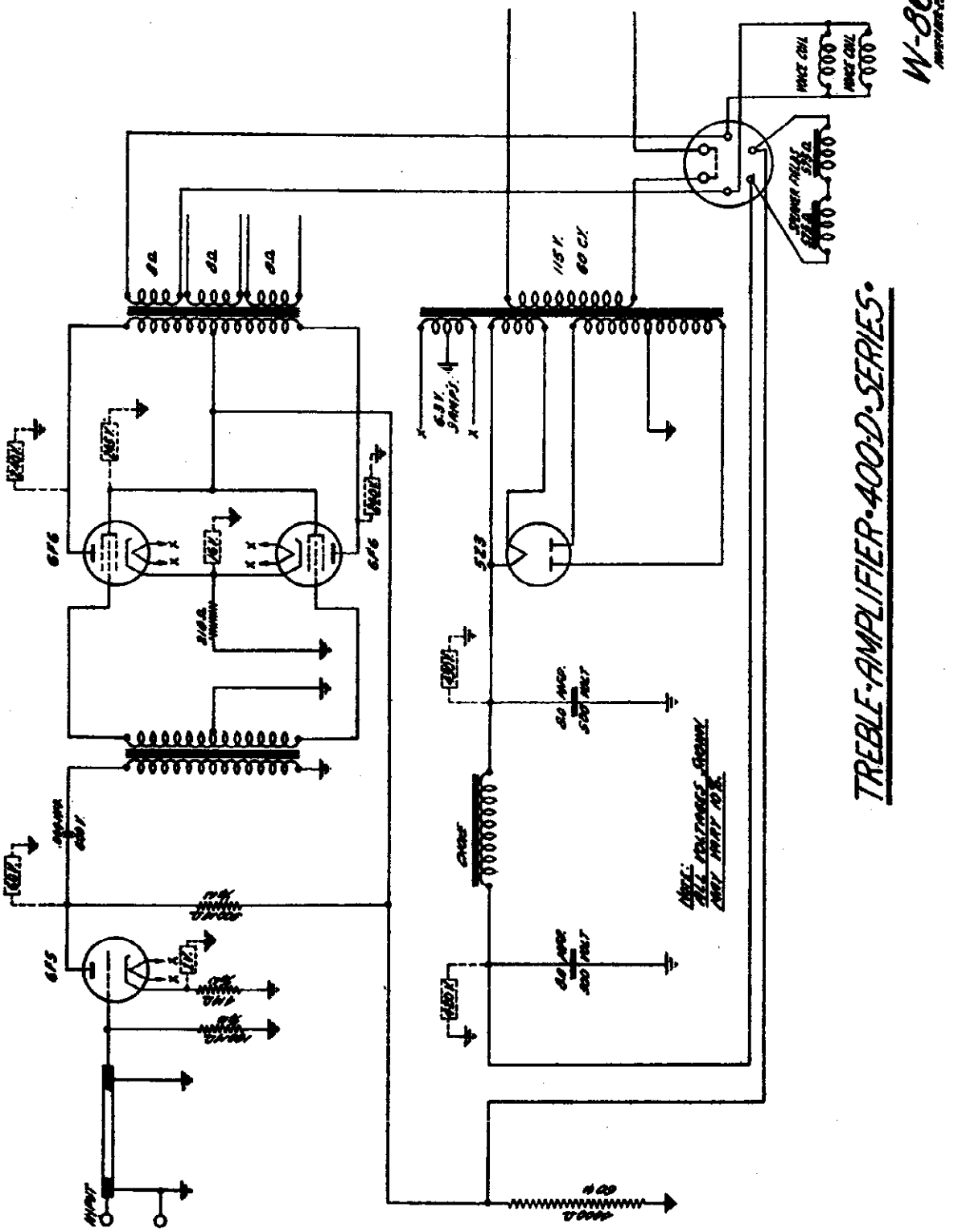

©John F. Rider, Publisher

CASE ELECTRIC CORP.

MODEL 601
Chassis 16 SM
Alignment
Trimmers

MODEL 601 CHASSIS 16 SM

TUBE COMPLEMENT

1 Type 6D6 RF Amplifier
1 Type 6A7 First Detector and Converter
1 Type 6K7 IF Amplifier
1 Type 75 Second Detector AVC and AF Amplifier
1 Type 6F6 Amplifier
1 Type 80 Rectifier

Sockets are marked for the proper tubes.

ALIGNMENT PROCEDURE

Correct alignment is of extreme importance in all wave receivers. The receivers are properly aligned at the factory with precision equipment and realignment should not be attempted by the service technician until all other causes of faulty operation are corrected.

In order to properly realign the receiver the following equipment is necessary:

1. A signal generator which will provide an accurately calibrated signal at any frequency from 262 kilocycles to 18 megacycles. The generator should have adjustable signal output.

2. An output audio voltmeter of the low voltage type to be connected across the moving coil of the speaker. This should be capable of providing a readable deflection for relatively low output levels to avoid the effects of overload.

3. An insulated or non-metallic screw driver for the adjustment of trimmers.

IF ALIGNMENT 262.5 KC

1. Connect the output meter (low scale) across the loud speaker voice coil. Turn the wave band switch (outside of tuning knob) to its left hand or counter-clockwise position. This brings the red indicator for broadcast band to the top. Turn the volume control to its maximum position.

2. Connect the test oscillator ground to chassis and the "hot" lead from the test oscillator to the grid of the 6L7 converter tube through a series .1 Mfd. condenser. Set test oscillator to 262.5 kc.

3. Adjust IF alignment screws C13, C14, (see illustration below) of second IF transformer, T2, adjacent to rectifier tube (type 80) to maximum output, reducing output of test oscillator to keep the meter reading on scale as alignment proceeds.

4. Adjust alignment screws C11, C12, of first IF transformer, T1, (directly behind tuning condenser) to maximum output as described above.

5. Readjust these trimmers for accurate alignment. Always use the lowest possible output from the test oscillator to preclude the possibility of automatic volume control action confusing proper adjustment.

ADJUSTMENT OF WAVE TRAP

Connect test oscillator to antenna and ground terminals of the receiver using a .00025 Mfd. condenser in series with the antenna terminal. With oscillator set at 262.5 kc adjust antenna trap alignment screw C4, for minimum signal increasing output of test oscillator as a minimum is reached.

RF ALIGNMENT (Broadcast "A" or "Red" Band)

1. With test oscillator connecting antenna post through .00025 Mfd. as above set signal generator to 1400 kc.

2. Set dial scale, hour and minute hands, to 6 o'clock when gang condenser is fully meshed at maximum capacitance.

3. Set dial to calibration mark 1400 kc using hour hand to indicate frequency (no further attention need be paid to position of minute hand which is used merely for convenience in logging stations by "TIME"). Adjust broadcast oscillator trimmer condenser C15, for maximum output meter reading. If it is found that two peaks occur within the range of the trimmer action use the one in which the trimmer is in its lowest capacitance or counter-clockwise position.

4. Adjust detector input trimmer C8, to a maximum.

5. Adjust the antenna stage trimmer C5, to a maximum.

6. Set test oscillator to 600 kc and tune in the signal, then adjust broadcast oscillator padder C19, for maximum output. This padder is mounted under the chassis at the side of the RF "deck." Rock the condenser back and forth a degree or two in order to obtain proper maximum.

7. Repeat the 1400 kc adjustments described under 3, 4, 5, for greater accuracy. The output of the test oscillator should always be kept at the lowest output which will allow sufficient meter swing since this assures greater accuracy of adjustment.

Short Wave "B" or "Green" Band

1. Turn the wave band switch to the "B" or "Green" position. Leave the oscillator connected as above but with its output set to 6000 kc and the .00025 Mfd. condenser replaced by a 400 Ohm resistor. Set dial scale to 6 mc on the green or middle band, adjust "B" band oscillator trimmer condenser C16, for maximum output observing as before that the proper point occurs at the minimum or counter-clockwise position of the screw if two points are found.

2. Adjust detector input "B" band trimmer condenser C9, to a maximum while rocking the tuning condenser slightly for maximum response.

3. Adjust Antenna stage "B" band trimmer C6, for maximum output.

4. Set the test oscillator to 2000 kc and tune in the signal. Adjust "B" band oscillator padder condenser C18 for maximum output while rocking tuning condenser as described above.

5. Repeat operations 1, 2, and 3 to assure precise alignment.

Short Wave "C" or "Yellow" Band

1. With test oscillator connected same as for "B" band and set to 18000 kc (18 mc) set dial scale to 18 mc on inner or yellow band.

2. Adjust "C" band oscillator trimming condenser C17, for maximum response. Use lower capacity or counter-clockwise response point.

3. Adjust "C" band detector input trimmer C10, to a maximum, "rocking" tuning adjustment to obtain greatest output.

4. Adjust antenna "C" band trimmer C7, for maximum response.

*The adjustment of the detector input trimmers on the "B" and "C" bands by the procedure outlined above is advisable as contrasted with the usual method of trimming without rocking the tuning adjustment because slight couplings through the tube circuits tend to disturb the oscillator frequency as the detector is tuned This procedure should be followed on any type of all wave receiver.

See Case Page 7-16, for Dial Drive notes.

In checking the circuit with a continuity or ohmmeter it is wise to follow the schematic diagram in an orderly fashion starting at the antenna and ground connections and proceeding to the speaker circuits.

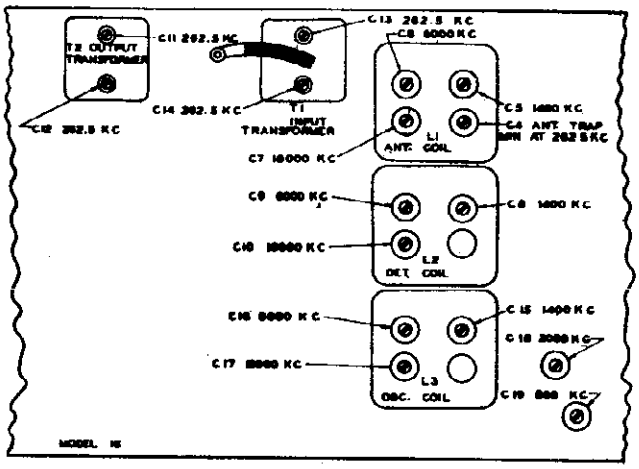

©John F. Rider, Publisher

MODEL 601
Chassis 16 SM
Schematic

CASE ELECTRIC CORP.

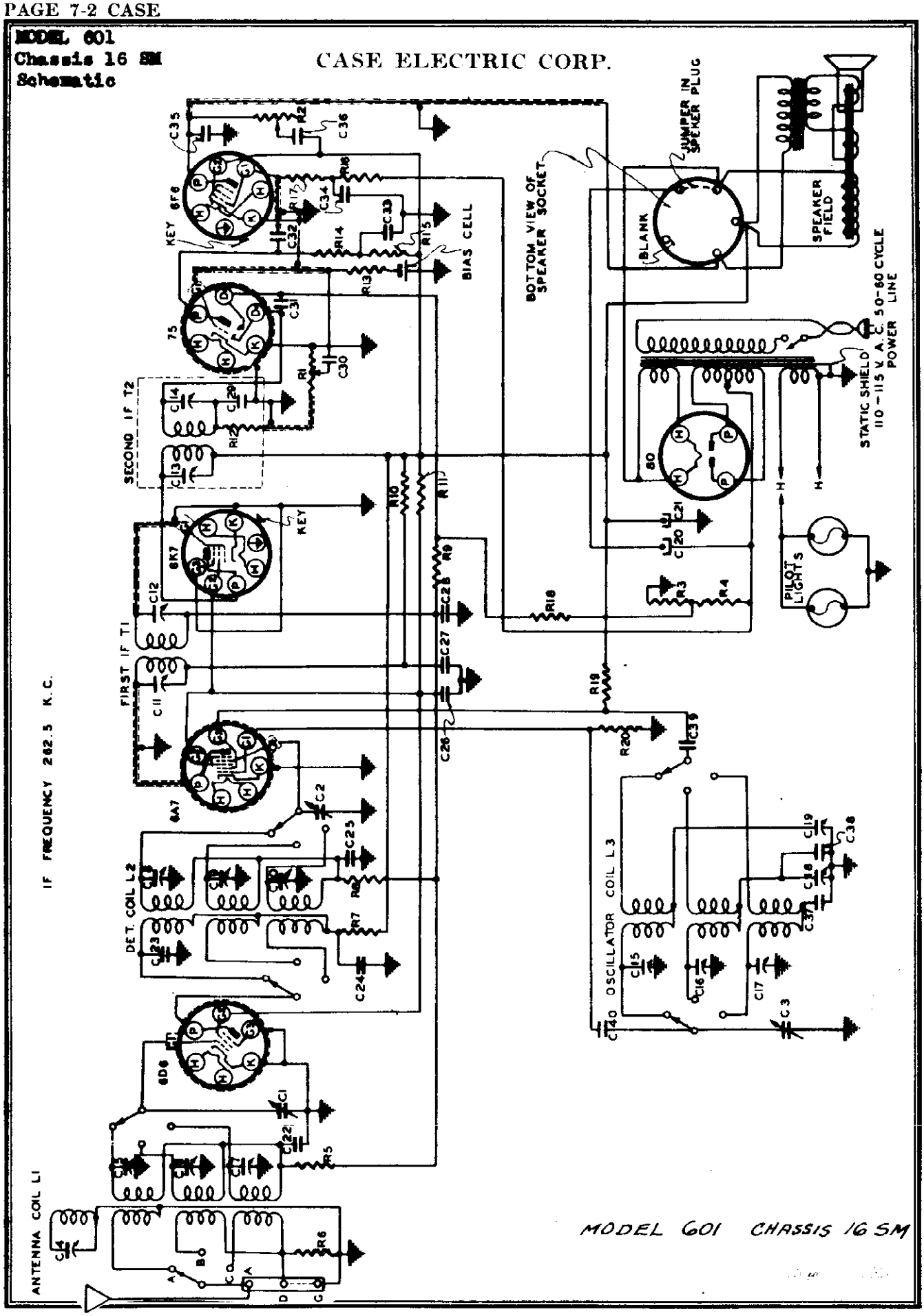

©John F. Rider, Publisher

CASE ELECTRIC CORP.

MODEL 601
CHASSIS 16 SM

REPLACEMENT PARTS AND PRICE LIST

	A15016	Belt Drive	.21
	B15045	Bezel	.94
	15410	Book Instruction	.13
	15070	Clip Grid (Glass Tube)	.01
	15071	Clip Grid (Metal Tube)	.01
	15550	Clutch Assembly	.26
C4 C5 C6 C7 L1	15271	Coil Antenna in Shield Sold in	3.63
C8 C9 C10 L2	15272	Coil Detector in Shield sets	3.44
C17 C15 C16 L3	15423	Coil Oscillator in Shield of 3	2.75
	A15069	Cord Attachment	.35
C1 C2 C3	D15076	Condenser Variable	5.21
C18 C19	A15259	Condenser Variable Padder	1.06
C21	A16237-2	Cond. Electrolytic 10 Mfd 300V	.80
C20	A15513	Cond. Electrolytic 16 Mfd 400V	1.07
C23 C29	15906	Cond. Mica 100 Mmfd	.11
C37	15911	Cond. Mica 4500 Mmfd	.37
C40	15918	Cond. Mica 100 Mmfd	.11
C38	15921	Cond. Mica 1250 Mmfd	.19
C31	15919	Cond. Mica 50 Mmfd	.11
C34	15751	Cond. Tubular .25 Mfd 200V	.18
C22 C25 C28 C30	15752	Cond. Tubular .05 Mfd 200V	.12
C32 C35	15753	Cond. Tubular .002 Mfd 600V	.11
C24 C27	15756	Cond. Tubular .05 Mfd 400V	.12
C26 C33	15757	Cond. Tubular .1 Mfd 400V	.14
C39	15754	Condenser Tubular .01 Mfd 400V	.11
C36	15758	Condenser Tubular .03 Mfd 600V	.16
R2	A15116	Control Tone	.70
R1	A15113	Control Volume	.89
	A15031	Doublet Terminal	.13
	15327	Dial & Paper Strip CASE	1.96
	15328	Dial & Paper Strip RADIOVOGUE	1.96
	B15044	Glass Convex	.25
	A15037	Knob Drive	.14
	A15098	Knob Switch	.23
	A15039	Knob Volume & Tone	.15
	15089	Lamp Dial 6.3 V Baynet Type	.19
	15129	Lamp Dial Assembly	.68
	A15082	Lug Ground Electrolytic	.01
	A15032	Mounting Chassis Rubbers	.03
	B15262	Paper Dial Backing	.03
	A15023	Pointer (Minute)	.04
	A15024	Pointer (Tuning)	.04
R3 R4			
R20			
R14 R17			
R5 R8 R15 R16			
R9 R13 R18			
R6			
R7 R10			
R11			
R19			
C11 C12 T1			
C13 C14 T2			

A15066	Pulley Idler Assembly	.10	
A15072	Planetary Assembly	.46	
A15358	Resistor Candohm	.23	
15511	Resistor Carbon 50,000 1/4 Watt	.08	
15512	Resistor Carbon 250M 1/4 Watt	.08	
15515	Resistor Carbon 100M 1/4 Watt	.08	
15520	Resistor Carbon 500M 1/4 Watt	.06	
15523	Resistor Carbon 200M 1/4 Watt	.08	
15542	Resistor Carbon 1000 1/4 Watt	.06	
15502	Resistor Carbon 16M 2 Watt	.16	
15501	Resistor Carbon 25M 1 Watt	.11	
B15041	Retaining Spring for Bezel	.18	
B15043	Retaining Ring for Glass	.16	
A15020	Shaft Drive	.15	
15095	Shield Coat Tube (Long)	.12	
15094	Shield Coat Tube (Short)	.11	
15416	Shielded 1st IF Plate Lead	.09	
15417	Shielded 6F6 Plate Lead	.11	
15418	Shielded 6F6 Grid Lead	.13	
15420	Shielded Vol. & 75 Grid Lead	.29	
A15053	Socket Dial Lamp (Left Hand)	.11	
A15054	Socket Dial Lamp (Right Hand)	.11	
15062	Socket Speaker	.10	
15063	Socket 80	.09	
15064	Socket 42	.11	
15179	Socket 6A7	.11	
15066	Socket 6K7	.14	
15068	Socket 6D6	.11	
15084	Socket 6F6	.14	
A15033	Spacer Brass (For Chassis Rubber)	.02	
15406	Speaker 6"	5.27	
A15017	Spring Tension	.02	
C15256	Switch Range	2.14	
15123	Switch Range Pulley & String	.65	
B15208-4	Transformer Input IF	1.42	
B15209-4	Transformer Output IF	1.63	
15361	Transformer Power 60 cycle 110V	4.75	
B15390	Transformer Power 25 cycle 110V	7.55	
1950	Washer Felt (Small Knob)	.01	
1951	Washer Felt (Switch Knob)	.01	
A2111	Washer Extruding Fibre	.02	
A2103	Washer Plain Fibre	.01	
A2300	Washer Rubber RF Panel	.02	

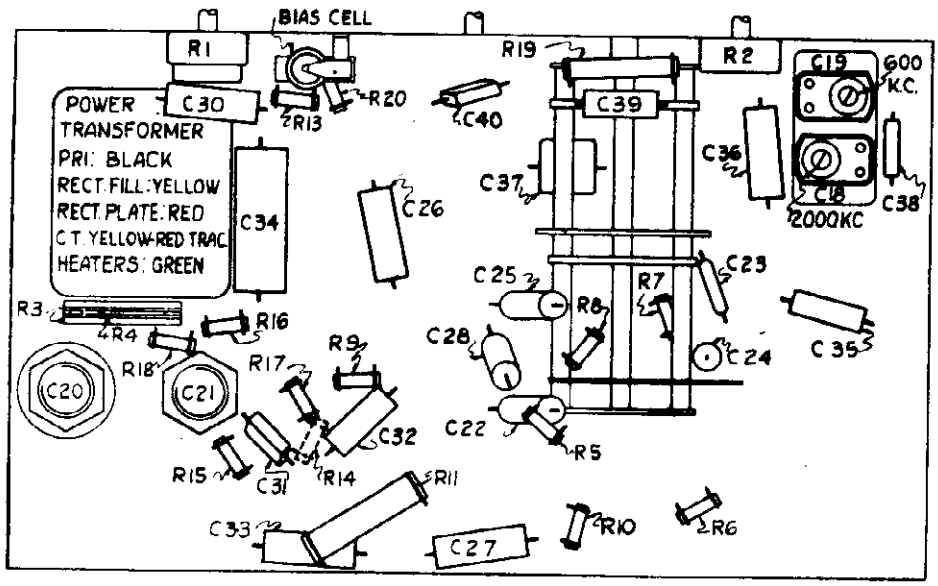

VOLTAGE CHART

Measurements from elements to chassis-1000 ohms per Volt Meter Line Voltage-115v AC.
RF negative grid bias 5.0 Volts
6F6 negative grid bias 20.0 Volts
AC--RMS each plate of rectifier to center tax 350.0 Volts
Total current drain 82 Ma. E--drop across speaker field 86.0 Volts

POSITION	TUBE	Ef	Ek	Eg SCREEN	Eg SUPPRESSOR	Ep TRIODE	Ep PENTODE
Oscillator	6A7	6.3	0.0		0.0	170.0	
RF Amplifier	6D6	6.3	0.0	125.0	0.0		265.0
1st Detector	6A7	6.3	0.0	125.0	0.0		265.0
IF Amplifier	6K7	6.3	0.0	125.0	0.0		265.0
2nd Detector AVC-AF Amplifier	75	6.3	0.0		0.0	90.0	
Amplifier	6F6	6.3	0.0	260.0	0.0		265.0
Rectifier	80	5.0			0.0		

©John F. Rider, Publisher

MODEL 701
Chassis 16 SME
Schematic

CASE ELECTRIC CORP.

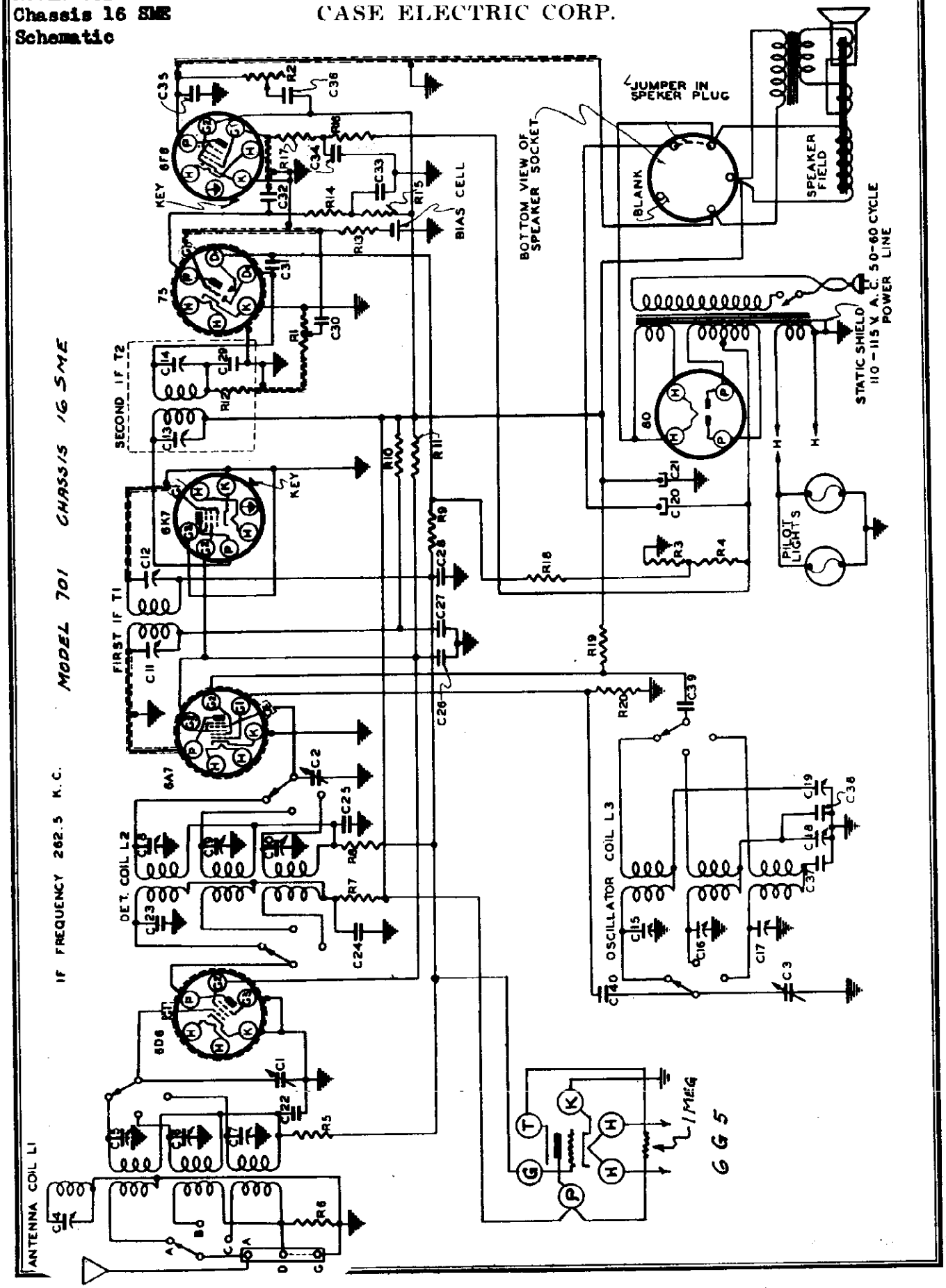

©John F. Rider, Publisher

CASE ELECTRIC CORP.

MODEL 701
Chassis 16 SME
Alignment, Trimmers

TUBE COMPLEMENT

1 Type 6D6 RF Amplifier
1 Type 6A7 First Detector and Converter
1 Type 6K7 IF Amplifier
1 Type 75 Second Detector AVC and AF Amplifier
1 Type 6F6 Amplifier
1 Type 80 Rectifier

Sockets are marked for the proper tubes.

ALIGNMENT PROCEDURE

Correct alignment is of extreme importance in all wave receivers. The receivers are properly aligned at the factory with precision equipment and realignment should not be attempted by the service technician until all other causes of faulty operation are corrected.

In order to properly realign the receiver the following equipment is necessary:

1. A signal generator which will provide an accurately calibrated signal at any frequency from 262 kilocycles to 18 megacycles. The generator should have adjustable signal output.

2. An output audio voltmeter of the low voltage type to be connected across the moving coil of the speaker. This should be capable of providing a readable deflection for relatively low output levels to avoid the effects of overload.

3. An insulated or non-metallic screw driver for the adjustment of trimmers.

IF ALIGNMENT 262.5 KC

1. Connect the output meter (low scale) across the loud speaker voice coil. Turn the wave band switch (outside of tuning knob) to its left hand or counter-clockwise position. This brings the red indicator for broadcast band to the top. Turn the volume control to its maximum position.

2. Connect the test oscillator ground to chassis and the "hot" lead from the test oscillator to the grid of the 6L7 converter tube through a series .1 Mfd. condenser. Set test oscillator to 262.5 kc.

3. Adjust IF alignment screws C13, C14, (see illustration below) of second IF transformer, T2, adjacent to rectifier tube (type 80) to maximum output, reducing output of test oscillator to keep the meter reading on scale as alignment proceeds.

4. Adjust alignment screws C11, C12, of first IF transformer, T1, (directly behind tuning condenser) to maximum output as described above.

5. Readjust these trimmers for accurate alignment. Always use the lowest possible output from the test oscillator to preclude the possibility of automatic volume control action confusing proper adjustment.

ADJUSTMENT OF WAVE TRAP

Connect test oscillator to antenna and ground terminals of the receiver using a .00025 Mfd. condenser in series with the antenna terminal. With oscillator set at 262.5 kc adjust antenna trap alignment screw C4, for minimum signal increasing output of test oscillator as a minimum is reached.

RF ALIGNMENT (Broadcast "A" or "Red" Band)

1. With test oscillator connecting antenna post through .00025 Mfd. as above set signal generator to 1400 kc.

2. Set dial scale, hour and minute hands, to 6 o'clock when gang condenser is fully meshed at maximum capacitance.

3. Set dial to calibration mark 1400 kc using hour hand to indicate frequency (no further attention need be paid to position of minute hand which is used merely for convenience in logging stations by "TIME"). Adjust broadcast oscillator trimmer condenser C15, for maximum output meter reading. If it is found that two peaks occur within the range of the trimmer action use the one in which the trimmer is in its lowest capacitance or counter-clockwise position.

4. Adjust detector input trimmer C8, to a maximum.

5. Adjust the Antenna stage trimmer C5, to a maximum.

6. Set test oscillator to 600 kc and tune in the signal, then adjust broadcast oscillator padder C19, for maximum output. This padder is mounted under the chassis at the side of the RF "deck." Rock the condenser back and forth a degree or two in order to obtain proper maximum.

MODEL 701 CHASSIS 16 SME

7. Repeat the 1400 kc adjustments described under 3, 4, 5, for greater accuracy. The output of the test oscillator should always be kept at the lowest output which will allow sufficient meter swing since this assures greater accuracy of adjustment.

Short Wave "B" or "Green" Band

1. Turn the wave band switch to the "B" or "Green" position. Leave the oscillator connected as above but with its output set to 6000 kc and the .00025 Mfd. condenser replaced by a 400 ohm resistor. Set dial scale to 6 mc on the green or middle band, adjust "B" band oscillator trimmer condenser C16, for maximum output observing as before that the proper point occurs at the minimum or counter-clockwise position of the screw if two points are found.

2. Adjust detector input "B" band trimmer condenser C9, to a maximum while rocking the tuning condenser slightly for maximum response.

3. Adjust Antenna stage "B" band trimmer C6, for maximum output.

4. Set the test oscillator to 2000 kc and tune in the signal. Adjust "B" band oscillator padder condenser C18 for maximum output while rocking tuning condenser as described above.

5. Repeat operations 1, 2, and 3 to assure precise alignment.

Short Wave "C" or "Yellow" Band

1. With test oscillator connected same as for "B" band and set to 18000 kc (18 mc) set dial scale to 18 mc on inner or yellow band.

2. Adjust "C" band oscillator trimming condenser C17, for maximum response. Use lower capacity or counter-clockwise response point.

3. Adjust "C" band detector input trimmer C10, to a maximum, "rocking" tuning adjustment to obtain greatest output.

4. Adjust antenna "C" band trimmer C7, for maximum response.

*The adjustment of the detector input trimmers on the "B" and "C" bands by the procedure outlined above is advisable as contrasted with the usual method of trimming without rocking the tuning adjustment because slight couplings through the tube circuits tend to disturb the oscillator frequency as the detector is tuned. This procedure should be followed on any type of all wave receiver.

In checking the circuit with a continuity or ohmmeter it is wise to follow the schematic diagram in an orderly fashion starting at the antenna and ground connections and proceeding to the speaker circuits.

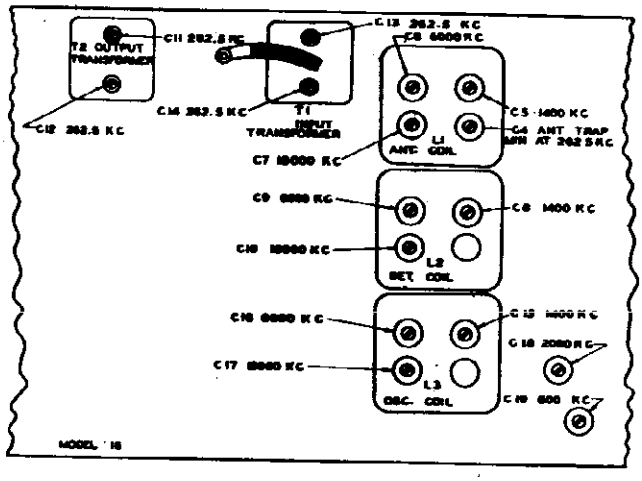

See Case Page 7-16, for Dial Drive notes.

©John F. Rider, Publisher

MODEL 701
Chassis 16 SME
Voltage, Parts
Chassis

CASE ELECTRIC CORP.

MODEL 701
CHASSIS 16 SME

REPLACEMENT PARTS AND PRICE LIST

	A15016	Belt Drive	.21
	B15045	Bezel	.94
	15410	Book Instruction	.13
	15070	Clip Grid (Glass Tube)	.01
	15071	Clip Grid (Metal Tube)	.01
	15330	Clutch Assembly	.26
C4 C5 C6 C7 L1	15271	Coil Antenna in Shield Sold in	3.63
C8 C9 C10 L2	15272	Coil Detector in Shield sets	3.44
C17 C15 C16 L3	15423	Coil Oscillator in Shield of 3	2.75
	A15069	Cord Attachment	.36
C1 C2 C3	D15076	Condenser Variable	5.21
C18 C19	A15259	Condenser Variable Padder	1.06
C21	A15237-2	Cond. Electrolytic 10 Mfd 300V	.80
C20	A15313	Cond. Electrolytic 16 Mfd 400V	1.07
C23 C29	15906	Cond. Mica 100 Mmfd	.11
C37	15911	Cond. Mica 4500 Mmfd	.37
C40	15918	Cond. Mica 100 Mmfd	.11
C38	15921	Cond. Mica 1250 Mmfd	.19
C31	15919	Cond. Mica 50 Mmfd	.11
C34	15751	Cond. Tubular .25 Mfd 200V	.18
C22 C25 C28 C30	15752	Cond. Tubular .05 Mfd 200V	.12
C32 C35	15753	Cond. Tubular .002 Mfd 600V	.11
C24 C27	15756	Cond. Tubular .05 Mfd 400V	.12
C26 C33	15757	Cond. Tubular .1 Mfd 400V	.14
C39	15754	Condenser Tubular .01 Mfd 400V	.11
C36	15758	Condenser Tubular .03 Mfd 600V	.16
R2	A15116	Control Tone	.70
R1	A15113	Control Volume	.89
	A15031	Doublet Terminal	.13
	15327	Dial & Paper Strip CASE	1.96
	15328	Dial & Paper Strip RADIOVOGUE	1.96
	B15044	Glass Convex	.25
	A15037	Knob Drive	.14
	A15098	Knob Switch	.23
	A15039	Knob Volume & Tone	.15
	15089	Lamp Dial 6.3 V Baynet Type	.19
	15129	Lamp Dial Assembly	.68
	A15082	Lug Ground Electrolytic	.01
	A15032	Mounting Chassis Rubbers	.03
	B15262	Paper Dial Backing	.03
	A15023	Pointer (Minute)	.04
	A15024	Pointer (Tuning)	.04
R3 R4			
R20			
R14 R17			
R5 R8 R15 R16			
R9 R13 R18			
R6			
R7 R10			
R11			
R19			
C11 C12 T1			
C13 C14 T2			

A15066	Pulley Idler Assembly	.10
A15072	Planetary Assembly	.46
A15358	Resistor Candohm	.23
15511	Resistor Carbon 50,000 1/4 Watt	.08
15512	Resistor Carbon 250M 1/4 Watt	.08
15515	Resistor Carbon 100M 1/4 Watt	.08
15520	Resistor Carbon 500M 1/4 Watt	.06
15523	Resistor Carbon 200M 1/4 Watt	.08
15542	Resistor Carbon 1000 1/4 Watt	.06
15502	Resistor Carbon 16M 2 Watt	.16
15501	Resistor Carbon 25M 1 Watt	.11
B15041	Retaining Spring for Bezel	.18
B15043	Retaining Ring for Glass	.16
A15020	Shaft Drive	.15
15095	Shield Goat Tube (Long)	.12
15094	Shield Goat Tube (Short)	.11
15416	Shielded 1st IF Plate Lead	.09
15417	Shielded 6F6 Plate Lead	.11
15418	Shielded 6F6 Grid Lead	.13
15420	Shielded Vol. & 75 Grid Lead	.29
A15053	Socket Dial Lamp (Left Hand)	.11
A15054	Socket Dial Lamp (Right Hand)	.11
15082	Socket Speaker	.10
15063	Socket 80	.09
15064	Socket 42	.11
15179	Socket 6A7	.11
15066	Socket 6K7	.14
15068	Socket 6D6	.11
15084	Socket 6F6	.14
A15053	Spacer Brass (For Chassis Rubber)	.02
15406	Speaker 6"	5.27
A15017	Spring Tension	.09
C15256	Switch Range	2.14
15123	Switch Range Pulley & String	.65
B15208-4	Transformer Input IF	1.42
B15209-4	Transformer Output IF	1.65
15361	Transformer Power 60 cycle 110V	4.75
B15390	Transformer Power 25 cycle 110V	7.55
1950	Washer Felt (Small Knob)	.01
1951	Washer Felt (switch Knob)	.01
A2111	Washer Extruding Fibre	.02
A2105	Washer Plain Fibre	.01
A2300	Washer Rubber RF Panel	.02

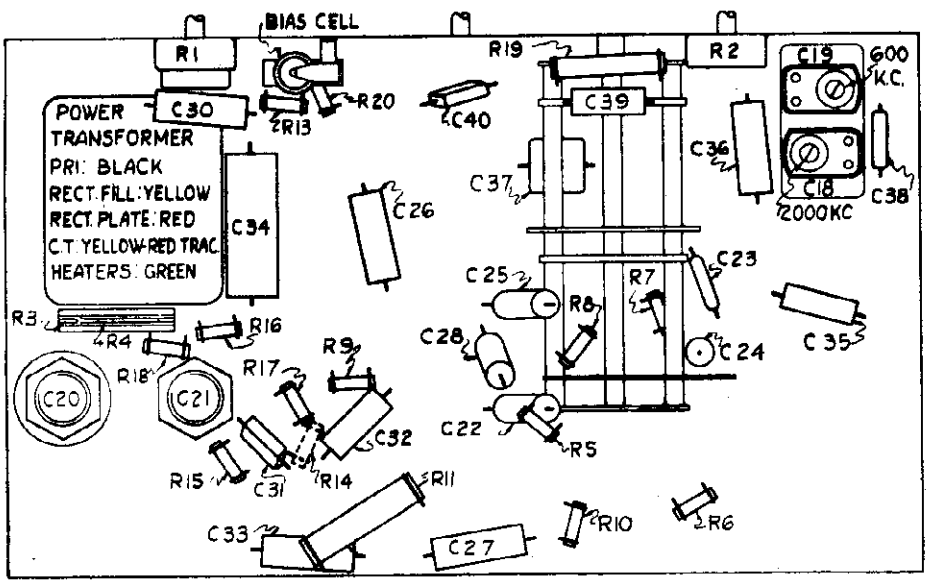

VOLTAGE CHART

Measurements from elements to chassis-1000 Ohms per Volt Meter Line Voltage-115V AC.
RF negative grid bias 5.0 Volts
6F6 negative grid bias 20.0 Volts
AC--RMS each plate of rectifier to center tax 350.0 Volts
Total current drain 82 Ma. E--drop across speaker field 86.0 Volts

POSITION	TUBE	Ef	Ek	Eg SCREEN	Eg SUPPRESSOR	Ep TRIODE	Ep PENTODE
Oscillator	6A7	6.3	0.0		0.0	170.0	
RF Amplifier	6D6	6.3	0.0	125.0	0.0		265.0
1st Detector	6A7	6.3	0.0	125.0	0.0		265.0
IF Amplifier	6K7	6.3	0.0	125.0	0.0		265.0
2nd Detector AVC-AF Amplifier	75	6.3	0.0		0.0	90.0	
Amplifier	6F6	6.3	0.0	260.0	0.0		250.0
Rectifier	80	5.0			0.0		

©John F. Rider, Publisher

CASE ELECTRIC CORP.

MODELS 801, 802
Chassis 27 SME
Alignment, Trimmers

MODELS 801-802 CHASSIS 27SME

TUBE COMPLEMENT

1 Type 6K7 RF Amplifier
1 Type 76 Oscillator
1 Type 6L7 First Detector and Converter
1 Type 6D6 IF amplifier
1 Type 75 Second Detector AVC and AF Amplifier
1 Type 42 Amplifier
1 Type 80 Rectifier

Sockets are marked for the proper tubes.

ALIGNMENT PROCEDURE

Correct alignment is of extreme importance in all wave receivers. The receivers are properly aligned at the factory with precision equipment and realignment should not be attempted by the service technician until all other causes of faulty operation are corrected.

In order to properly realign the receiver the following equipment is necessary:

1. A signal generator which will provide an accurately calibrated signal at any frequency from 868 kilocycles to 18 megacycles. The generator should have adjustable signal output.

2. An output audio voltmeter of the low voltage type to be connected across the moving coil of the speaker. This should be capable of providing a readable deflection for relatively low output levels to avoid the effects of overload.

3. An insulated or non-metallic screw driver for the adjustment of trimmers.

IF ALIGNMENT 262.5 KC

1. Connect the output meter (low scale) across the loud speaker voice coil. Turn the wave band switch (outside of tuning knob) to its left hand or counter-clockwise position. This brings the red indicator for broadcast band to the top. Turn the volume control to its maximum position.

2. Connect the test oscillator ground to chassis and the "hot" lead from the test oscillator to the grid of the 6L7 converter tube through a series .1 Mfd. condenser. Set test oscillator to 262.5 kc.

3. Adjust IF alignment screws C11, C12, (see illustration below) of second IF transformer, T2, adjacent to rectifier tube (type 80) to maximum output, reducing output of test oscillator to keep the meter reading on scale as alignment proceeds.

4. Adjust alignment screws C13, C14, of first IF transformer, T1, (directly behind tuning condenser) to maximum output as described above.

5. Readjust these trimmers for accurate alignment. Always use the lowest possible output from the test oscillator to preclude the possibility of automatic volume control action confusing proper adjustment.

ADJUSTMENT OF WAVE TRAP

Connect test oscillator to antenna and ground terminals of the receiver using a .00025 Mfd. condenser in series with the antenna terminal. With oscillator set at 262.5 kc adjust antenna trap alignment screw C4, for minimum signal increasing output of test oscillator as a minimum is reached.

RF ALIGNMENT (Broadcast "A" or "Red" Band)

1. With test oscillator connecting antenna post through .00025 Mfd. as above set signal generator to 1400 kc.

2. Set dial scale, hour and minute hands, to 6 o'clock when gang condenser is fully meshed at maximum capacitance.

3. Set dial to calibration mark 1400 kc using hour hand to indicate frequency (no further attention need be paid to position of minute hand which is used merely for convenience in logging stations by "TIME"). Adjust broadcast oscillator trimmer condenser C17, for maximum output meter reading. If it is found that two peaks occur within the range of the trimmer action use the one in which the trimmer is in its lowest capacitance or counter-clockwise position.

4. Adjust detector input trimmer C8, to a maximum.

5. Adjust the Antenna stage trimmer C5, to a maximum.

6. Set test oscillator to 600 kc and tune in the signal, then adjust broadcast oscillator padder C15, for maximum output. This padder is mounted under the chassis at the side of the RF "deck." Rock the condenser back and forth a degree or two in order to obtain proper maximum.

7. Repeat the 1400 kc adjustments described under 3, 4, 5, for greater accuracy. The output of the test oscillator should always be kept at the lowest output which will allow sufficient meter swing since this assures greater accuracy of adjustment.

Short Wave "B" or "Green" Band

1. Turn the wave band switch to the "B" or "Green" position. Leave the oscillator connected as above but with its output set to 6000 kc and the .00025 Mfd. condenser replaced by a 400 ohm resistor. Set dial scale to 6 mc on the green or middle band, adjust "B" band oscillator trimmer condenser C18, for maximum output observing as before that the proper point occurs at the minimum or counter-clockwise position of the screw if two points are found.

2. Adjust detector input "B" band trimmer condenser C9, to a maximum while rocking the tuning condenser slightly for maximum response.

3. Adjust Antenna stage "B" band trimmer C6, for maximum output.

4. Set the test oscillator to 2000 kc and tune in the signal. Adjust "B" band oscillator padder condenser C16 for maximum output while rocking tuning condenser as described above.

5. Repeat operations 1, 2, and 3 to assure precise alignment.

Short Wave "C" or "Yellow" Band

1. With test oscillator connected same as for "B" band and set to 18000 kc (18 mc) set dial scale to 18 mc on inner or yellow band.

2. Adjust "C" band oscillator trimming condenser C19, for maximum response. Use lower capacity or counter-clockwise response point.

3. Adjust "C" band detector input trimmer C10, to a maximum, "rocking" tuning adjustment to obtain greatest output.

4. Adjust antenna "C" band trimmer C7, for maximum response.

*The adjustment of the detector input trimmers on the "B" and "C" bands by the procedure outlined above is advisable as contrasted with the usual method of trimming without rocking the tuning adjustment because slight couplings through the tube circuits tend to disturb the oscillator frequency as the detector is tuned. This procedure should be followed on any type of all wave receiver.

In checking the circuit with a continuity or ohmmeter it is wise to follow the schematic diagram in an orderly fashion starting at the antenna and ground connections and proceeding to the speaker circuits.

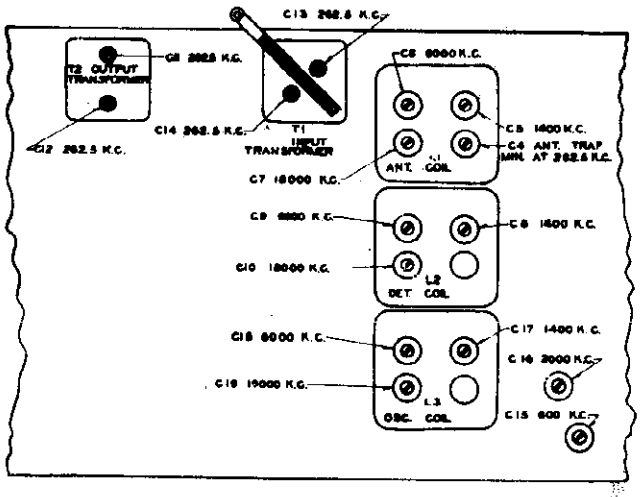

See Case Page 7-16, for Dial Drive notes

©John F. Rider, Publisher

MODELS 801,802
Chassis 27 SME
Schematic

CASE ELECTRIC CORP.

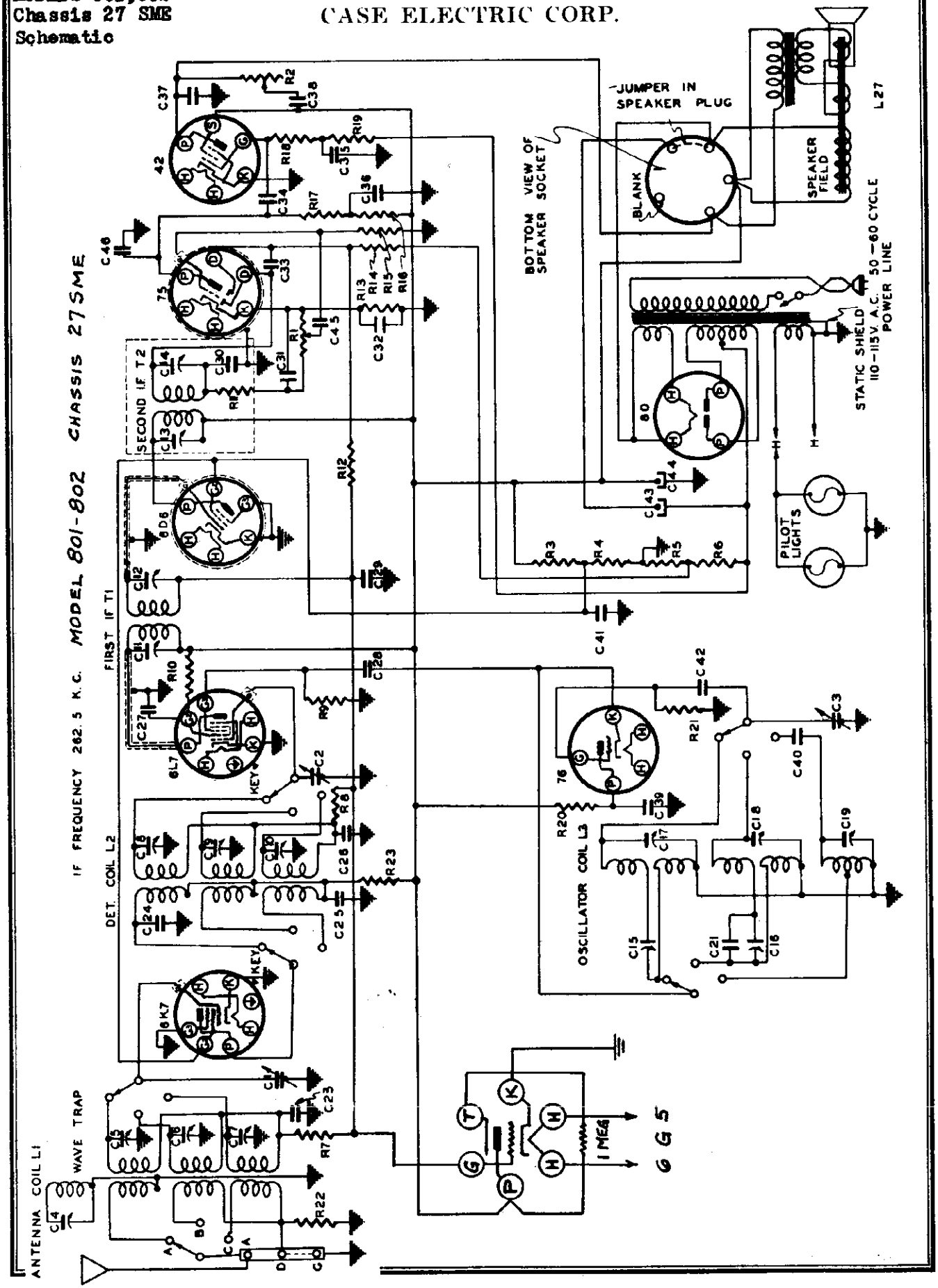

©John F. Rider, Publisher

CASE ELECTRIC CORP.

MODELS 801,802
Chassis 27 SME
Voltage,Parts
Chassis

MODELS 801-802
CHASSIS 27 SME

REPLACEMENT PARTS AND PRICE LIST

	A15016	Belt Drive		.21
	B15045	Bezel		.94
	15441	Book Instruction		.12
	15070	Clip Grid (Glass Type)		.01
	15071	Clip Grid (Metal Type)		.01
	15330	Clutch Assembly		.86
C4 C5 C6 C7 L1	15271	Coil Antenna & Shield	sold	3.53
C8 C9 C10 L2	15272	Coil Detector & Shield	matched	3.44
C17 C18 C19 L3	15270	Coil Oscillator & Shield	sets	2.75
	A15069	Cord Attachment		.35
C44	A15237-2	Cond. Electrolytic 10 Mfd 300V		.80
C43 (25 Cycle)	A15427	Cond. Electrolytic 16 Mfd 300V		.96
C43 (60 Cycle)	A15313	Cond. Electrolytic 16 Mfd 400V		1.07
C24	15906	Cond. Mica 100 Mmfd		1.07
C20 C31 C42 C46	15918	Cond. Mica 100 Mmfd		.11
C21	15927	Cond. Mica 1500 Mmfd		.20
C33	15923	Cond. Mica 50 Mmfd		.12
C40	15911	Cond. Mica 4500 Mmfd		.27
C36 C41	15750	Cond. Tubular .25 Mfd 400V		.19
C23 C26 C29 C32	15752	Cond. Tubular .05 Mfd 200V		.12
C37	15753	Cond. Tubular .002 Mfd 600V		.11
C25 C27 C28	15756	Cond. Tubular .05 Mfd 400V		.12
C39	15757	Cond. Tubular .1 Mfd 400V		.14
C34 C45	15760	Cond. Tubular .02 Mfd 400V		.12
C35	15762	Cond. Tubular .5 Mfd 400V		.28
C38	15768	Cond. Tubular .05 Mfd 600V		.16
C1 C2 C3	D15076	Cond. Variable		5.21
C15 C16	A15367	Cond. Variable Padder		.72
R2	A15116	Control Tone 0-150M Ohms		.70
R1	A15368	Control Volume 0-200M Ohms		.89
	15327	Dial & Paper Strip CASE		1.96
	15328	Dial & Paper Strip RADIOVOGUE		1.96
	B15044	Glass Convex		.25
	A15037	Knob Drive		.14
	A15098	Knob Switch		.25
	A15039	Knob Volume & Tone		.15
	15069	Lamp Dial 6.3 V. Baynet Type		.19
	15129	Lamp Dial Assembly		.68
	A15082	Lug Ground Electrolytic		.01
	A15032	Mounting Chassis Rubber		.05
	A15072	Planetary Assembly		.48
	A15023	Pointer (Minute)		.04
	A15024	Pointer (Tuning)		.04
	A15006	Pulley Idler Assembly		.10
R5 R6	A15358	Resistor Candohm 182-61 Ohms		.83
R20	15501	Resistor Carbon 25M 1W		.11
R11	15510	Resistor Carbon 20M 1/4W		.08
R9	15511	Resistor Carbon 50M 1/4W		.08
R7 R8 R16 R19	15515	Resistor Carbon 100M 1/4W		.08
R14 R15	15517	Resistor Carbon 1 meg. 1/4W		.08
R13	15550	Resistor Carbon 2500 1/4W		.07
R3	15535	Resistor Carbon 13M 2W		.17
R22	15523	Resistor Carbon 200M 1/4W		.08
R10	15524	Resistor Carbon 50M 1W		.09
R17 R18	15512	Resistor Carbon 250M 1/4W		.08
R4	15526	Resistor Carbon 10M 1W		.09
R12	15520	Resistor Carbon 500M 1/4W		.08
R21	15529	Resistor Carbon 25M 1/4W		.08
R23	15542	Resistor Carbon 1M 1/4W		.08
	B15043	Retaining Ring for Glass		.16
	B15041	Retaining Spring for Bezel		.18
	A15020	Shaft Drive		.16
	15095	Shield Coat (Long)		.12
	15094	Shield Coat (Short)		.11
	15388	Shield Plate Lead (Long)		.15
	15387	Shield Plate Lead (Short)		.19
	15404	Shield Volume Control Lead		.32
	15092	Socket 75		.11
	A15053	Socket Dial Lamp L. H.		.11
	A15054	Socket Dial Lamp R. H.		.11
	15066	Socket 6K7		.14
	15063	Socket 80		.09
	15064	Socket 42		.11
	15065	Socket 76		.10
	15068	Socket 6D6		.11
	15067	Socket 6L7		.14
	A15083	Spacer Brass (For Chassis Rubber)		.02
	C15367	Speaker 10"		7.04
	B15406	Speaker 6"		5.27
	A15017	Spring Tension		.02
	C15256	Switch Range		2.14
	15123	Switch Range Pulley & String		.65
	A15031	Terminal Doublet		.15
	B15208-4	Transformer Input IF		1.42
C11 C12 T1	B15209-4	Transformer Output IF		1.63
C13 C14 T2	15361	Transformer Power 60 Cycle 110V		4.75
	15390	Transformer Power 25 Cycle 110V		7.55
	B15264	Trimmer R F (4 Gang)		.76
	B15060	Trimmer R F		.64
	1950	Washer Felt (Small Knob)		.01
	1951	Washer Felt (Switch Knob)		.01
	A2111	Washer Extruding Fibre		.02
	A2103	Washer Plain Fibre		.01
	A2300	Washer Rubber R F Panel		.02

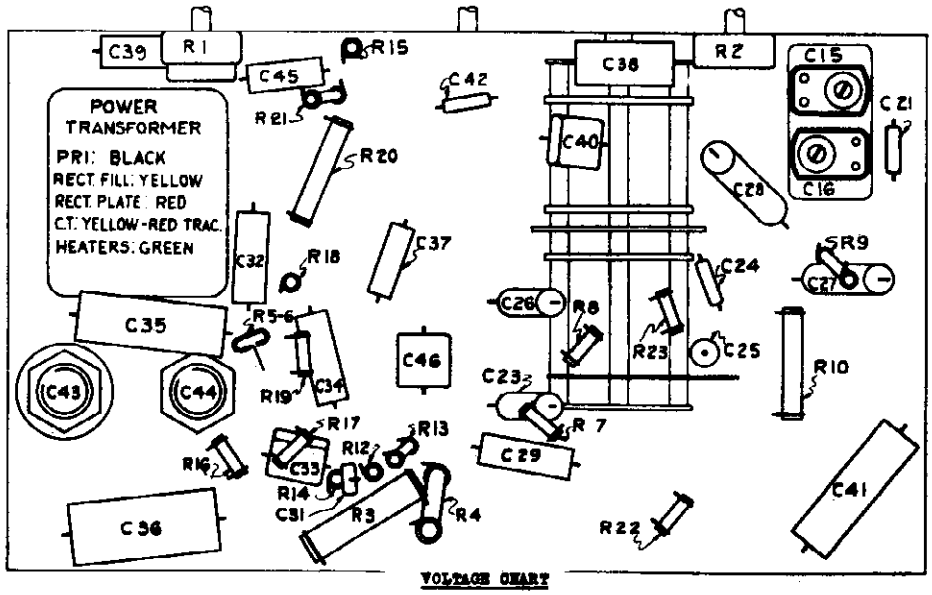

VOLTAGE CHART

Measurements from elements to chassis-1000 Ohms per Volt Meter Line Voltage-115 V. AC.
RF negative grid bias-3.0 Volts
6D6 negative grid bias 20.0 Volts
AC--RMS each plate of rectifier to center tax 350.0 Volts
Total current drain 82 Ma. E--drop across speaker field 86.0 Volts

POSITION	TUBE	E_f	E_k	E_g SCREEN	E_g SUPPRESSOR	E_p TRIODE	E_p PENTODE
Oscillator	75	6.3	0.0		0.0	100.0	
RF Amplifier	6K7	6.3	0.0	105.0	0.0		260.0
1st Detector	6L7	6.3	0.0	100.0	0.0		260.0
IF Amplifier	6D6	6.3	0.0	105.0	0.0		260.0
2nd Detector AVC-AF Amp.	75	6.3	1.0		0.0	80.0	
Amplifier	42	6.3	0.0	260.0	0.0		250.0
Rectifier	80	5.0			0.0		

©John F. Rider, Publisher

MODEL 1001
Chassis 19 RSME
Trimmers, Alignment

CASE ELECTRIC CORP.

MODEL 1001 CHASSIS 19 RSME

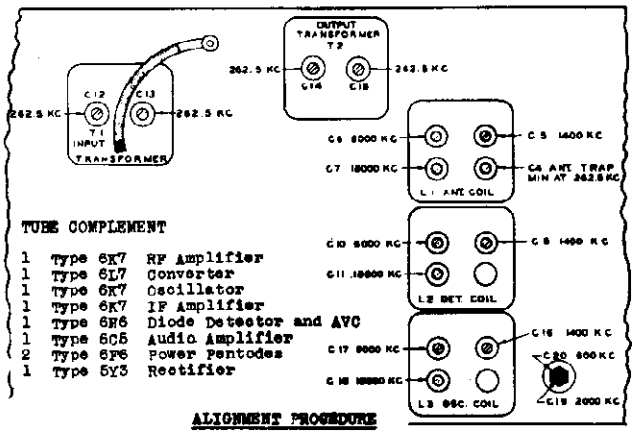

TUBE COMPLEMENT

1	Type 6K7	RF Amplifier
1	Type 6L7	Converter
1	Type 6K7	Oscillator
1	Type 6K7	IF Amplifier
1	Type 6H6	Diode Detector and AVC
1	Type 6C5	Audio Amplifier
2	Type 6F6	Power Pentodes
1	Type 5Y3	Rectifier

ALIGNMENT PROCEDURE

Correct alignment is of extreme importance in all wave receivers. The receivers are properly aligned at the factory with precision equipment and realignment should not be attempted by the service technician until all other causes of faulty operation are corrected.

In order to properly realign the receiver the following equipment is necessary:

1. A signal generator which will provide an accurately calibrated signal at any frequency from 262 kilocycles to 18 megacycles. The generator should have adjustable signal output.

2. An output audio voltmeter of the low voltage type to be connected across the moving coil of the speaker. This should be capable of providing a readable deflection for relatively low output levels to avoid the effects of overload.

3. An insulated or non-metallic screw driver for the adjustment of trimmers.

IF ALIGNMENT 262.5 KC

1. Connect the output meter (low scale) across the loud speaker voice coil. Turn the wave band switch (outside of tuning knob) to its left-hand or counter-clockwise position. This brings the red indicator for broadcast band to the top. Turn the volume control to its maximum position.

2. Turn the Variable Selectivity (center bottom knob) to the left or sharpest position. Put tone control on brilliant or clockwise position. With selectivity control held all the way to the left or counter-clockwise loosen set screws of collars, which actuate variable selectivity coupling and rotate until the drive cables are drawn out as far as possible without forcing. Tighten set screws in the collars. This adjustment assures maximum selectivity and should be checked before IF Alignment is done.

3. Connect the test oscillator ground to chassis and the "hot" lead from the test oscillator to the grid of the 6L7 converter tube through a series .1 Mfd condenser. Set test oscillator to 262.5 kc.

4. With Variable Selectivity Control in sharpest position adjust IF alignment screws, C14, C15, of output transformer, (directly behind tuning condenser) to maximum output reducing output of test oscillator to keep the meter reading on scale as alignment proceeds.

5. Adjust alignment screws, C12, C13, of input transformer T1, (adjacent to electrolytic condenser) to maximum output as described above.

6. Readjust all four alignment screws to insure accurate alignment. Always use the lowest possible output from the test oscillator to preclude the possibility of automatic volume control action confusing proper adjustment.

ADJUSTMENT OF WAVE TRAP

Connect test oscillator to antenna and ground terminals of the receiver using a .00025 Mfd condenser in series with the antenna terminal. With oscillator set at 262.5 kc adjust antenna trap alignment screw C4, for minimum signal increasing output of test oscillator as a minimum is reached.

RF ALIGNMENT (Broadcast "A" or "Red" Band)

1. With test oscillator connecting antenna post through .00025 Mfd as above set signal generator to 1400 kc.

2. Set dial scale, hour and minute hands, to 6 o'clock when gang condenser is fully meshed at maximum capacitance.

3. Set dial to calibration mark 1400 kc using hour hand to indicate frequency (no further attention need be paid to position of minute hand which is used merely for convenience in logging stations by "TIME"). Adjust broadcast oscillator trimmer condenser C16, for maximum output meter reading. If it is found that two peaks occur within the range of the trimmer action use the one in which the trimmer is in its lowest capacitance or counter-clockwise position.

4. Adjust detector input trimmer C9, to a maximum.

In some receivers C9, is a separate trimmer located on the range switch shield under the chassis rather than in the top of the coil can. In these models C8, is a 100 Mmf fixed Mica Condenser instead of the variable trimmer shown on the diagram.

5. Adjust the Antenna stage trimmer C5, to a maximum.

6. Set test oscillator to 600 kc and tune in the signal, then adjust broadcast oscillator padder C20, for maximum output. This padder is mounted under the chassis at the side of the RF "deck." This adjustment is the outer nut of the concentric type padding condenser. Rock the condenser back and forth a degree or two in order to obtain proper maximum.

7. Repeat the 1400 kc adjustments described under 3, 4, 5, for greater accuracy. The output of the test oscillator should always be kept at the lowest output which will allow sufficient meter swing since this assures greater accuracy of adjustment.

Short Wave "B" or "Green" Band

1. Turn the wave band switch to the "B" or "Green" position. Leave the oscillator connected as above but with its output set to 6000 kc and the .00025 Mfd condenser replaced by a 400 Ohm resistor. Set dial scale to 6 mc on the green or middle band, adjust "B" band oscillator trimmer condenser C17, for maximum output observing as before that the proper point occurs at the minimum or counter-clockwise position of the screw if two points are found.

2. Adjust detector input "B" band trimmer condenser C10, to a maximum while rocking the tuning condenser slightly for maximum response.

3. Adjust Antenna stage "B" band trimmer C6, for maximum output.

4. Set the test oscillator to 2000 kc and tune in the signal. Adjust "B" band oscillator padder condenser C19 for maximum output while rocking tuning condenser as described above. This adjustment is the inner screw of the concentric type padding condenser.

5. Repeat operations 1, 2, and 3 to assure precise alignment.

Short Wave "C" or "Yellow" Band

1. With test oscillator connected same as for "B" band and set to 18000 kc (18 mc) set dial scale to 18 mc on inner or yellow band.

2. Adjust "C" band oscillator trimming condenser C18, for maximum response. Use lower capacity or counter-clockwise response point.

3. Adjust "C" band detector input trimmer C11, to a maximum, "rocking" tuning adjustment to obtain greatest output.

4. Adjust antenna "C" band trimmer C7, for maximum response.

*The adjustment of the detector input trimmers on the "B" and "C" bands by the procedure outlined above is advisable as contrasted with the usual method of trimming without rocking the tuning adjustment because slight couplings through the tube circuits tend to disturb the oscillator frequency as the detector is tuned. This procedure should be followed on any type of all wave receiver.

Part of the production of Model 19 incorporated certain circuit alterations which are shown in the insert enclosed by dotted lines on the circuit diagram of Page three. The parts placement diagram on Page two is a composite drawing showing the position of parts for both types of receivers. Parts dotted on this diagram refer to those shown in the insert of the schematic diagram. Circuit elements C31 and R17 are not used when dotted connections are employed.

When the variable selectivity control is in "tune" or narrow position certain 6K7 IF tubes may exhibit a tendency toward regeneration or instability due to control grid to plate capacity coupling. This may be "neutralized" by using several turns of twisted hook-up wire connected between the plate of the IF tube and blank lug of the RF socket which is used as a tie point for the AVC return. This is shown on the parts placement diagram.

Excessive hum in this model has been found to be due to defective 6H6 and 6C5 tubes. Replace each tube in turn with a tube known to be normal in this respect.

In checking the circuit with a continuity or ohmmeter it is wise to follow the schematic diagram in orderly fashion starting at the antenna and ground connections and proceeding to the speaker circuits.

©John F. Rider Publisher

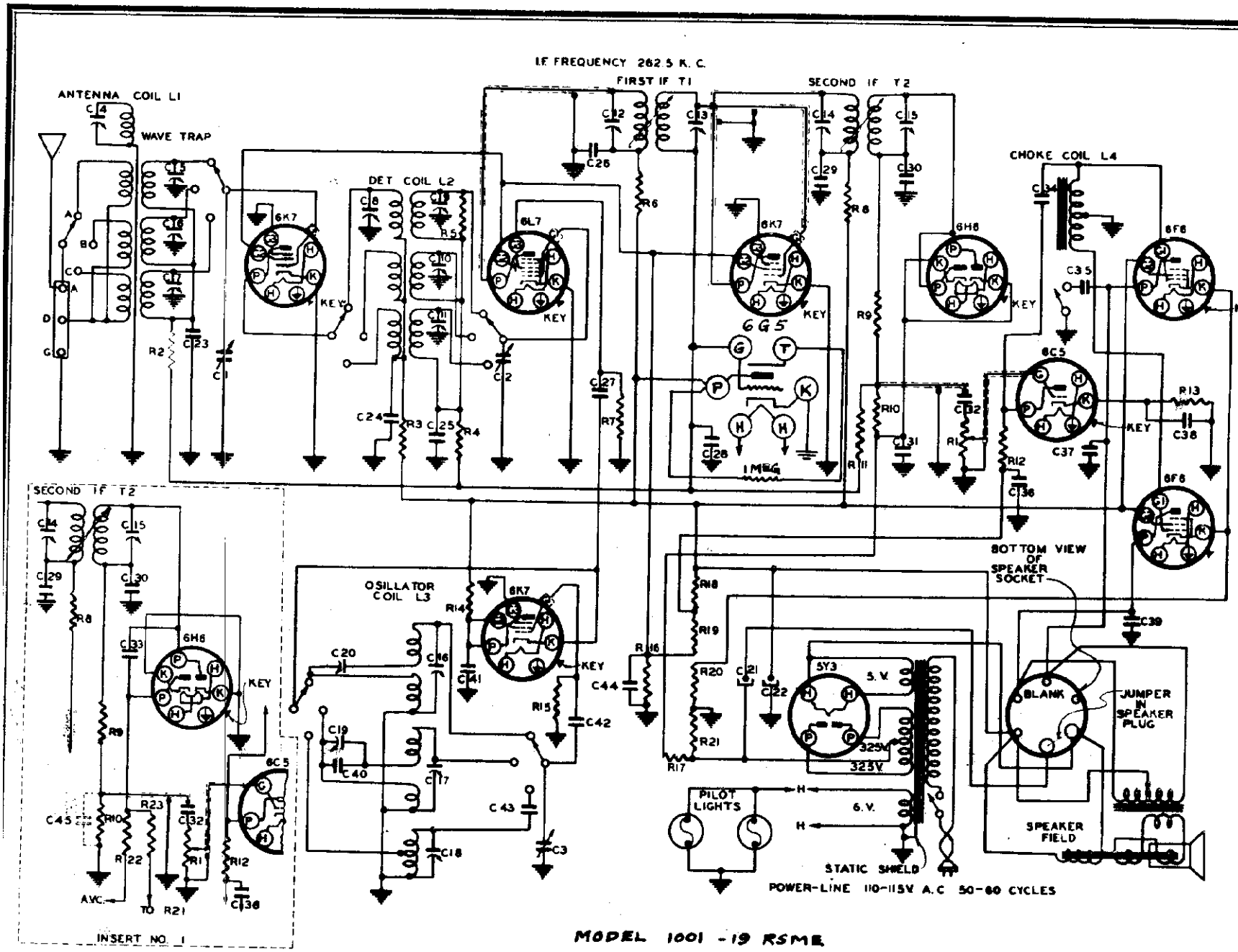

MODEL 1001 - 19 RSME

CASE ELECTRIC CORP.

CASE PAGE

MODEL 1001
Chassis 19 RS
Schematic

MODEL 1001
Chassis 19 RSME
Voltage,Parts
Chassis

CASE ELECTRIC CORP.

MODEL 1001
CHASSIS 19 RSME

REPLACEMENT PARTS & PRICE LIST

	A15016	Belt Drive	.21
	B15046	Bezel	.94
	15428	Book Instruction	.08
	B15238	Choke Audio	1.07
	15071	Clip Grid (Metal Tube)	.01
	15330	Clutch Assembly	.26
	A15069	Cord Attachment	.35
C1 C2 C3	D15076	Condenser Variable	5.21
C36	A15258	Cond. Electrolytic 4 Mfd 25V	
C38		4 Mfd 350V	1.37
C22	A15237	Cond. Electrolytic 10 Mfd 300V	.80
C21	A15256	Cond. Electrolytic 25 Mfd 375V	1.19
C43	15911	Cond. Mica 4500 Mmfd	.29
C30 C33 C42	15918	Cond. Mica 100 Mmfd	.11
C40	15921	Cond. Mica 1250 Mmfd	.19
C45	15926	Cond. Mica 200 Mmfd	.12
C34	15750	Cond. Tubular .25 Mfd 400V	.19
C44 C41 C31	15751	Cond. Tubular .25 Mfd 200V	.18
C23 C25 C28 C32	15752	Cond. Tubular .05 Mfd 200V	.12
C39 C37	15753	Cond. Tubular .002 Mfd 600V	.11
C35	15755	Cond. Tubular .05 Mfd 600V	.14
C24 C26	15756	Cond. Tubular .05 Mfd 400V	.12
C29	15762	Cond. Tubular .5 Mfd 400V	.28
C27	15760	Cond. Tubular .02 Mfd 400V	.12
C19 C20	A15259	Cond. Variable Padder	1.06
C16 C17 C18 L3	15270	Coil Oscillator in Shield Sold	2.75
C4 C5 C6 C7 L1	15271	Coil Antenna in Shield matched	3.53
C8 C9 C10 C11 L2	15272	Coil Detector in Shield sets	3.44
R1	A15253	Control Volume	.89
	15327	Dial & Paper Strip CASE	1.96
	15328	Dial & Paper Strip RADIOVOGUE	1.96
	B15044	Glass Convex	.25
	A15037	Knob Drive	.14
	A15098	Knob Switch	.23
	A15039	Knob Volume and Tone	.15
	A15036	Knob Pointer	.15
	15129	Lamp Dial Assembly	.68
	15089	Lamp Dial 6.3 V Baynet Type	.19
	A15062	Lug Ground Electrolytic	.01
	A15032	Mounting Chassis Rubber	.03
	A15023	Pointer (Minute)	.04
	A15024	Pointer (Tuning)	.04
	A15006	Pulley Idler Assembly	.10
	A15072	Planetary Assembly	.46
R21 R20 R19 R18	A15226	Resistor Candohm 5000-5W-250-44	.68
R19			
R23 R11			
R9			
R7			
R15 R5 R4 R2			
R17 R10			
R14			
R22			
R8			
R6 R3			
R13			
R16			
C12 C13 T1			
C14 C15 T2			

15501	Resistor Carbon 25M 1 Watt	.11
15517	Resistor Carbon 1 Meg. 1/4 Watt	.06
15510	Resistor Carbon 20M 1/4 Watt	.06
15511	Resistor Carbon 50M 1/4 Watt	.06
15515	Resistor Carbon 100M 1/4 Watt	.06
15523	Resistor Carbon 200M 1/4 Watt	.06
15544	Resistor Carbon 15M 1 Watt	.09
15503	Resistor Carbon 600M 1/4 Watt	.06
15541	Resistor Carbon 5000 1/4 Watt	.06
15542	Resistor Carbon 1000 1/4 Watt	.06
15543	Resistor Carbon 1000 1/4 Watt	.07
15545	Resistor Carbon 30M 1 Watt	.06
B15041	Retaining Spring for Bezel	.18
B15043	Retaining Ring Glass	.15
A15020	Shaft Drive	.15
15284	Shielded Antenna Lead Assembly	.15
15283	Shielded Volume Control Lead	.20
A15053	Socket Dial Lamp (Left Hand)	.11
A15054	Socket Dial Lamp (Right Hand)	.11
15066	Socket 6K7	.14
15083	Socket 6C5	.14
15084	Socket 6Y6	.14
15086	Socket 6H6	.14
15087	Socket 6L7	.14
15089	Socket 5Y3	.14
15248	Socket Speaker 6-prong	.11
A15033	Spacer Brass (For Chassis Rubber)	.02
C15540	Speaker 10"	7.46
C15389	Speaker 12"	9.79
A15017	Spring Tension	.02
C15376	Switch Range	2.52
A15158	Switch Tone Control	.34
15123	Switch Range Pulley & String	.65
15278	Transformer Input Variable IF	3.49
15279	Transformer Output Variable IF	3.16
A15227	Transformer Power 60 Cycle 110V	6.85
15265	Transformer Power 25 Cycle 110V	8.55
15060	Trimmer RF 3-gang	.64
15264	Trimmer RF 4-gang	.76
A15051	Terminal Doublet	.15
A2300	Washer Rubber RF Panel	.02
A2105	Washer Plain Fibre	.01
A2111	Washer Extruded Fibre	.02
1950	Washer Felt (small knob)	.01
1951	Washer Felt (small switch)	.01

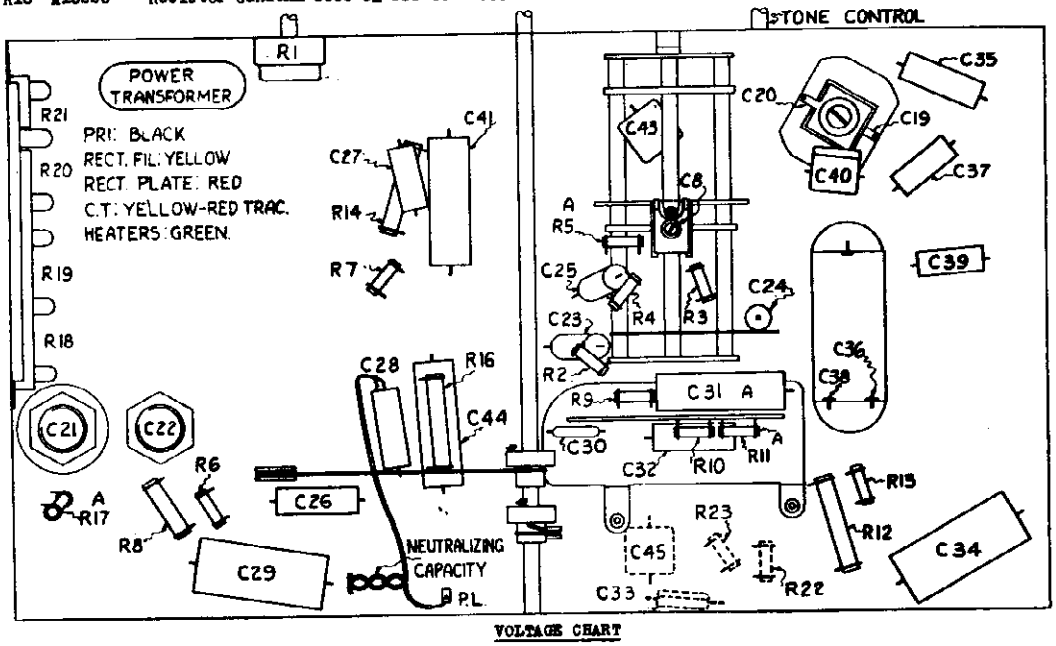

VOLTAGE CHART

Measurements from elements to chassis-1000 Ohms per Volt Meter Line Voltage-115v. AC.
RF negative grid bias 5.0 Volts
6F6 negative grid bias 18.0 Volts
AC--RMS each plate of rectifier to center tap 325.0 Volts
Total current drain 110 Ma. E - drop across speaker field 50.0 Volts

POSITION	TUBE	E_f	E_k	E_g SCREEN	E_g SUPPRESSOR	E_p TRIODE	E_p PENTODE
RF amplifier	6K7	6.3	0.0	125.0	0		260.0
Converter	6L7	6.3	0.0	125.0	0		260.0
Oscillator	6K7	6.3	0.0	190.0	0		190.0
IF Amplifier	6K7	6.3	0.8	125.0	.8		250.0
Diode Detector and AVC	6H6	6.3			0		
Audio Amplifier	6C5	6.3	2.6		0	100.0	
Power Pentode	6F6's	6.3	16.5	260.0	0		255.0
Rectifier	5Y3	5.2	320.0		0		

CASE ELECTRIC CORP.

MODELS 1101, 11
Chassis 110 RS
Schematic

MODELS 1101-1102
CHASSIS 110 RSME

I.F. 2655 KC

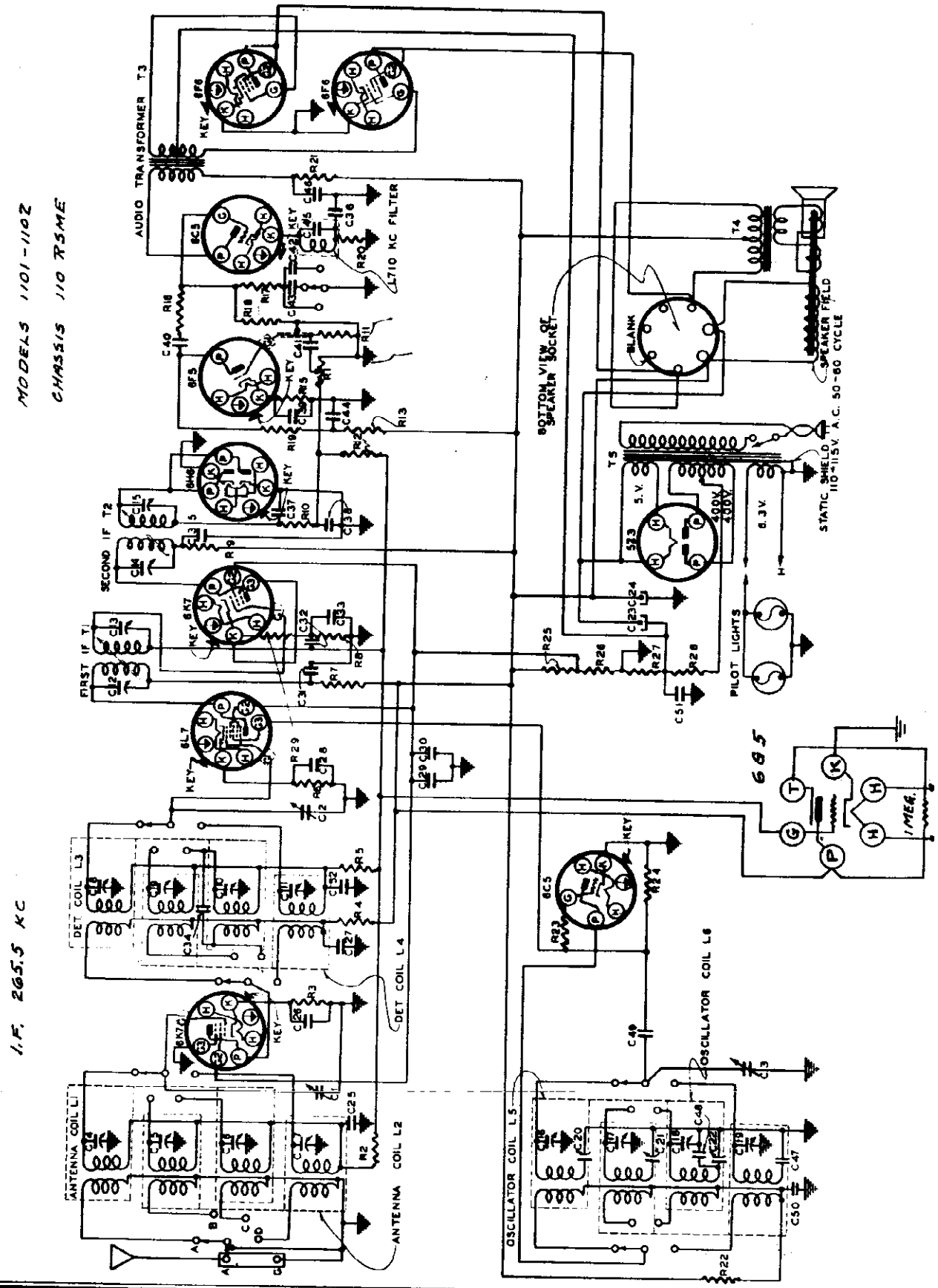

©John F. Rider. Publisher

MODELS 1101,1102
Chassis 110 RSME
Trimmers, Alignment

CASE ELECTRIC CORP.

MODELS 1101-1102

CHASSIS 110 RSME

TUBE COMPLEMENT

1	Type 6K7	RF Amplifier
1	Type 6C5	Oscillator
1	Type 6L7	Converter
1	Type 6K7	IF Amplifier
1	Type 6H6	Diode Detector & AVC Rectifier
1	Type 6F5	First Audio Amplifier
1	Type 6C5	Driver Amplifier
2	Type 6F6	Class A-B--push pull output
1	Type 5Z3	Rectifier

Sockets are marked for the proper tubes.

ALIGNMENT PROCEDURE

Correct alignment is of extreme importance in all wave receivers. The receivers are properly aligned at the factory with precision equipment and realignment should not be attempted by the service technician until all other causes of faulty operation are corrected.

In order to properly realign the receiver the following equipment is necessary:

1. A signal generator which will provide an accurately calibrated signal at any frequency from 862 kilocycles to 18 megacycles. The generator should have adjustable signal output.

2. An output audio voltmeter of the low voltage type to be connected across the moving coil of the speaker. This should be capable of providing a readable deflection for relatively low output levels to avoid the effects of overload.

3. An insulated or non-metallic screw driver for the adjustment of trimmers.

IF ALIGNMENT 262.5 KC

1. Connect the output meter (low scale) across the loud speaker voice coil. Turn the wave band switch (outside of tuning knob) to its left-hand or counter-clockwise position. This brings the red indicator for broadcast band to the top. Turn the volume control to its maximum position.

2. Turn the Variable Selectivity (center bottom knob) to the left or sharpest position. Put tone control on brilliant or clockwise position. With Selectivity Control held all the way to the left or counter-clockwise loosen set screws of collars, which actuate Variable Selectivity coupling and rotate until the drive cables are drawn out as far as possible without forcing. Tighten set screws in the collars. This adjustment assures maximum selectivity and should be checked before IF Alignment is done.

3. Connect the test oscillator ground to chassis and the "hot" lead from the test oscillator to the grid of the 6L7 converter tube through a series .1 Mfd condenser. Set test oscillator to 262.5 kc.

4. With Variable Selectivity Control in sharpest position adjust IF alignment screws, C14, C15, of output transformer, (directly behind tuning condenser) to maximum output reducing output of test oscillator to keep the meter reading on scale as alignment proceeds.

5. Adjust alignment screws, C12, C13, of input transformer T1, (adjacent to electrolytic condenser) to maximum output as described above.

6. Readjust all four alignment screws to insure accurate alignment. Always use the lowest possible output from the test oscillator to preclude the possibility of automatic volume control action confusing proper adjustment.

RF ALIGNMENT (Broadcast "A" or "Red" Band)

1. With test oscillator connecting antenna post through .00025 Mfd. as above set signal generator to 1400 kc.

2. Set dial scale, hour and minute hands, to 6 o'clock when gang condenser is fully meshed at maximum capacitance.

3. Set dial to calibration mark 1400 kc using hour hand to indicate frequency (no further attention need be paid to position of minute hand which is used merely for convenience in logging stations by "TIME"). Adjust broadcast oscillator trimmer condenser C16, for maximum output meter reading. If it is found that two peaks occur within the range of the trimmer action use the one in which the trimmer is in its lowest capacitance or counter-clockwise position.

4. Adjust detector input trimmer C8, to a maximum.

5. Adjust the antenna stage trimmer C4, to a maximum.

6. Set test oscillator to 600 kc and tune in the signal, then adjust broadcast oscillator padder C20, for maximum output. This padder is mounted under the chassis at the front of receiver. Rock the condenser back and forth a degree or two in order to obtain proper maximum.

7. Repeat the 1400 kc adjustments described under 3, 4, 5, for greater accuracy. The output of the test oscillator should always be kept at the lowest output which will allow sufficient meter swing since this assures greater accuracy of adjustment.

Short Wave "B" or "Green" Band

1. Turn the wave band switch to the "B" or "Green" position. Leave the oscillator connected as above but with its output set to 4000 kc and the .00025 Mfd. condenser replaced by a 400 Ohm resistor. Set dial scale to 4 mc on the green band, adjust "B" band oscillator trimmer condenser C17, for maximum output observing as before that the proper point occurs at the minimum or counter-clockwise position of the screw if two points are found.

2. Adjust detector input "B" band trimmer condenser C9, to a maximum while rocking the tuning condenser slightly for maximum response.

3. Adjust antenna stage "B" band trimmer C5, for maximum output.

4. Set the test oscillator to 1600 kc and tune in the signal. Adjust "B" band oscillator padder condenser C21, for maximum output while rocking tuning condenser as described above.

5. Repeat operations 1, 2, 3, to assure precise alignment.

Short Wave "C" or "Yellow" Band

1. With test oscillator connected same as for "B" band and set to 9000 kc (9 mc) set dial scale to 9 mc on yellow band.

2. Adjust "C" band oscillator trimming condenser C18, for maximum response. Use lower capacity or counter-clockwise response point.

3. Adjust "C" band detector input trimmer C10, to a maximum, "rocking" tuning adjustment to obtain greatest output.

4. Adjust antenna "C" band trimmer C6, for maximum response.

5. Set test oscillator to 4000 kc (4 mc) and tune in the signal. Adjust "C" band padder condenser C22, for maximum output while rocking tuning condenser as described above.

6. Repeat operations 1, 2, 3, 4, to assure precise alignment.

Short Wave "D" or "Blue" Band

1. With test oscillator connected as for "B" and "C" bands and set to 18000 kc (18 mc) set dial scale to 18 mc on blue band.

2. Adjust "D" band oscillator trimmer C19, for maximum response. Use lower capacity or counter-clockwise response point.

3. Adjust "D" band detector input trimmer C11, to a maximum, "rocking" tuning adjustment to obtain greatest output.

4. Adjust "D" band antenna trimmer C7, for maximum response.

5. Repeat operations 1, 2, 3, 4, to assure precise alignment.

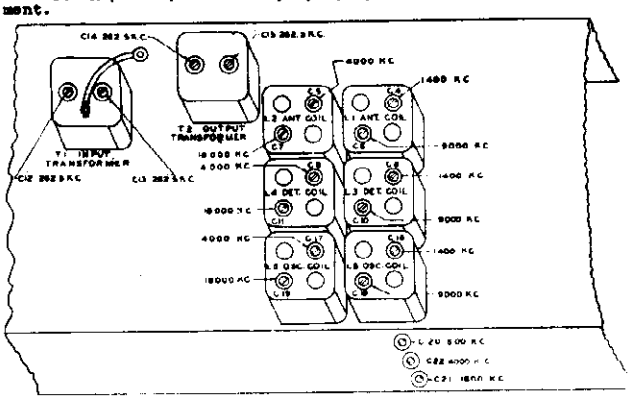

In checking the circuit with a continuity or ohmmeter it is wise to follow the schematic diagram in orderly fashion starting at the antenna and ground connections and proceeding to the speaker circuits.

In checking circuits connected to the electrolytic condensers it is necessary to observe the polarity of the leads of the continuity meter. Use the meter with the positive test terminal on the anode or plus side of the circuit. If the reverse connection is used the electrolytic condenser will become conductive and show a false low resistance reading.

The 10 kc Interchannel Beat Filter L7-C45 is a complete assembly in which the coil inductance is individually adjusted to tune with the condenser. In the event that either part should require replacement it will be necessary to order the complete assembly.

Excessive hum in this model has been found to be due to defective 6H6 and 6C5 tubes. Replace each tube in turn with one known to be normal.

©John F. Rider, Publisher

CASE ELECTRIC CORP.

MODELS 1101,1102 Chassis 110 RSME Voltage,Parts Chassis

REPLACEMENT PARTS AND PRICE LIST

	A15016	Belt Drive	.21
	B15045	Bezel	.94
	15428	Book Instruction	.08
	15071	Clip Grid (Metal Tube)	.01
	15330	Clutch Assembly	.26
	A15069	Cord Attachment	.35
C1 C2 C3	A15001	Cond. Variable	5.21
C20 C21 C22	A15228	Cond. Variable Padder	1.07
C51	A15102	Cond. Dry Electrolytic	1.92
C36 C39 C30	A15178	Cond. Dry Electrolytic	1.30
C23	A15100	Cond. Wet Electrolytic	1.21
C24	A15101	Cond. Wet Electrolytic	.97
C49 C37 C38	15906	Cond. Mica 100 Mmfd	.11
C47	15914	Cond. Mica 1915 Mmfd	.27
C48	15925	Cond. Mica 2500 Mmfd	.25
C34	15964	Cond. Mica 20 Mmfd	.12
C52 C41 C43	15752	Cond. Tubular .05 Mfd 200V	.12
C32 C25	15752	Condenser Tubular .05 Mfd 200V	.12
C40	15756	Cond. Tubular .05 Mfd 400V	.12
C46 C35 C33 C31	15757	Cond. Tubular .1 Mfd 400V	.14
C29 C28 C27 C50	15757	Cond. Tubular .1 Mfd 400V	.14
C42	15760	Cond. Tubular .02 Mfd 400V	.12
C26	15761	Cond. Tubular .1 Mfd 200V	.12
C44	15762	Cond. Tubular .5 Mfd 400V	.28
C45	15765	Cond. Tubular .06 Mfd 200V	.12
C4 C6 L1	15223	Coil 1 & 3 Band Ant. in Shield	3.00
C5 C7 L2	15224	Coil 2 & 4 Band Ant. in Shield	3.21
C8 C10 L3	15221	Coil 1 & 3 Band Det. in Shield	3.58
C9 C11 L4	15222	Coil 2 & 4 Band Det. in shield	2.87
C16 C18 L5	15219	Coil 1 & 3 Band Osc. in Shield	2.66
C17 C19 L6	15220	Coil 2 & 4 Band Osc. in Shield	2.77
R1	A15025	Control Volume	.95
L7	A15251	Filter 10 Kc Assembly	.52
	15365	Dial & Paper Strip CASE	2.08
	15456	Dial & Paper Strip RADIOVOGUE	2.08
	B15044	Glass Convex	.25
	A15037	Knob Drive	.14
	A15036	Knob Pointer	.16
	A15038	Knob Switch (4 Band)	.24
	A15039	Knob Volume & Tone	.15
	15089	Lamp Dial 6.3 V. Baynet Type	.19
	15129	Lamp Dial Assembly	.68
	A15082	Lug Ground Electrolytic	.01
	A15032	Mounting Chassis Rubber	.03
	A15023	Pointer (Minute)	.04
	A15024	Pointer (Tuning)	.04
	A15006	Pulley Idler Assembly	.10
	A15072	Planetary Assembly	.46

R25 R26 R27 R28	A15298	Resistor Candohm 150-320-4M-6M	1.00
R13 R24 R10	15511	Resistor Carbon 50M 1/4 Watt	.08
R5 R2	15515	Resistor Carbon 100M 1/4 Watt	.08
R12 R11	15517	Resistor Carbon 1 Meg. 1/4 Watt	.06
R19 R18 R16	15523	Resistor Carbon 200M 1/4 Watt	.08
R22	15525	Resistor Carbon 35M 1 Watt	.10
R4 R21 R9	15526	Resistor Carbon 10M 1 Watt	.09
R17	15529	Resistor Carbon 25M 1/4 Watt	.06
R8 R3	15534	Resistor Carbon 230 Ohm 1/4 Watt	.10
R29 R23	15536	Resistor Carbon 100 Ohm 1/4 Watt	.07
R15	15539	Resistor Carbon 400 Ohm 1/4 Watt	.10
R6	15543	Resistor Carbon 1000 Ohm 1/4 Watt	.07
R7	15546	Resistor Carbon 40M 1 Watt	.09
R20	15547	Resistor Carbon 1500 Ohm 1/4 Watt	.07
	B15041	Retaining Spring for Bezel	.18
	B15043	Retaining Ring Glass	.16
	A15020	Shaft Drive	.15
	15351	Shield Antenna Lead	.17
	15317	Shield Grid Lead	.13
	15350	Shielded Switch Lead	.16
	15349	Shielded V.C. Lead	.32
	A15053	Socket Dial Lamp (Left Hand)	.11
	A15054	Socket Dial Lamp (Right Hand)	.11
	15066	Socket 6K7	.14
	15083	Socket 6C5	.14
	15084	Socket 6F6	.14
	15085	Socket 6F5	.14
	15086	Socket 6H6	.14
	15087	Socket 6L7	.14
	15181	Socket 5Z3	.09
	15088	Socket Speaker	.11
	A15033	Spacer Brass (for Chassis Rubber)	.02
	C15312	Speaker 12"	9.79
	A15017	Spring Tension	.08
	C15058	Switch Range	2.19
	A15026	Switch Tone Control	.42
	15123	Switch Range Pulley & String	.65
T3	B15062	Transformer Audio	2.24
C12 C13 T1	15278	Transformer Input Variable IF	3.49
C14 C15 T2	15279	Transformer Output Variable IF	3.16
	C15051	Transformer Power 60 cycles 110V	6.06
	B15069	Trimmer RF 2 Gang	.52
	B15060	Trimmer RF 3 Gang	.64
	A15114	Antenna & Ground Terminal	.09
	A2300	Washer Rubber RF Panel	.08
	A2103	Washer Plain Fibre	.01
	A2111	Washer Extruded Fibre	.02
	1950	Washer Felt (Small Knob)	.01
	1951	Washer Felt (Switch Knob)	.01

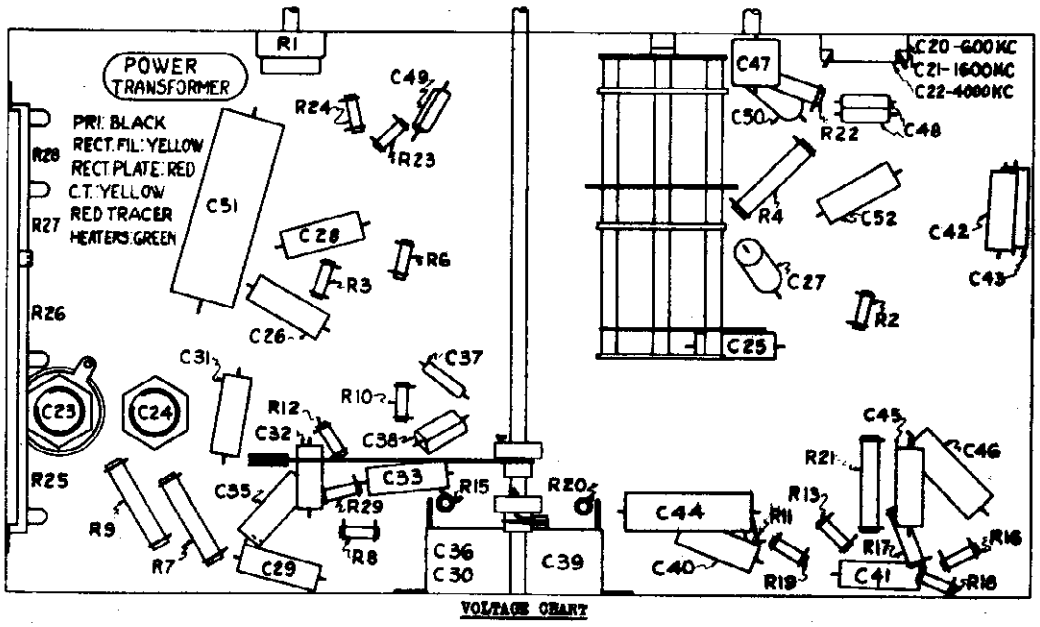

VOLTAGE CHART

Measurements from elements to Chassis-1000 Ohms per Volt Meter Line voltage-115 V. AC.
AC--Rms each plate of rectifier to center tap 400 Volts.
Total current drain 200 Ma. E--drop across speaker field 68 Volts.

POSITION	TUBE	E_f	E_k	E_g SCREEN	E_g SUPPRESSOR	E_p TRIODE	E_p PENTODE
RF Amplifier	6K7	6.3	2.5	110	2.5		215
Oscillator	6C5	6.3					100
Converter	6L7	6.3	5	110			215
IF Amplifier	6K7	6.3	3	110			235
Diode Detector & AVC Rectifier	6H6	6.3					
1st Audio Amplifier	6F5	6.3	1.5				110
Driver Amplifier	6C5	6.3	8.5				235
Class A-B--Push Pull Output	6F6		32			310	
Rectifier	5Z3	5					400

MODELS 1101 - 1102 CHASSIS 110 RSME

©John F. Rider, Publisher

Planetary Drive Assembly, Notes

CASE ELECTRIC CORP.

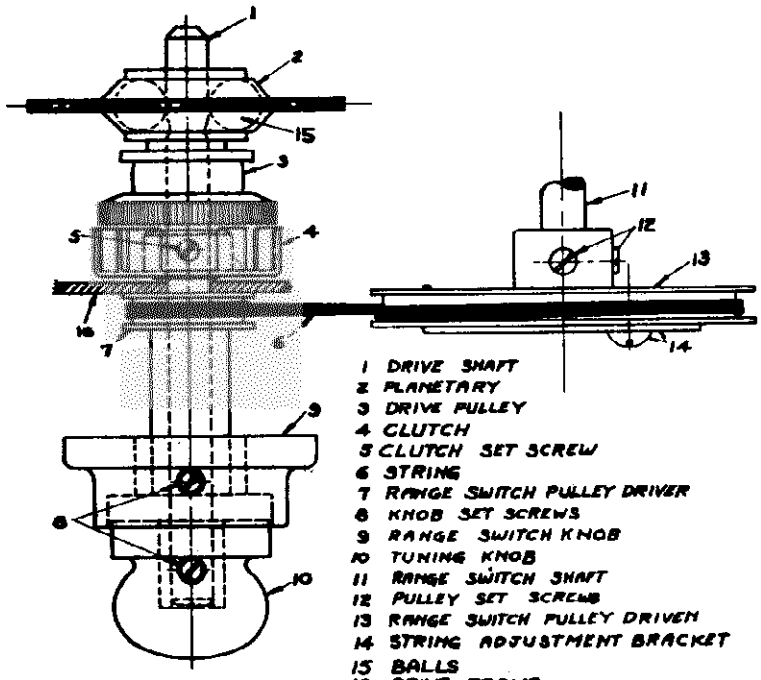

THE DUAL SPEED PLANETARY DRIVE

In order to make the tuning of short wave broadcast easier, a dual speed drive is provided, giving a ratio of 96 to 1 with the knob, No. 10, in the "OUT" position which is exceptionally good for short wave tuning, a ratio of 16 to 1 is provided with the knob, No. 10, pushed "IN," used for standard broadcast tuning. You can use this drive knob in the position you like best.

The mechanism of this drive is of the planetary type, using ball bearings, No. 15, housed between cantiliver type spring housing, No. 2. When the drive knob, No. 10, is in "OUT" position, the balls, No. 15, operate direct on the drive shaft, No. 1, which gives a reduction in speed on the pointers. When the drive knob, No. 10, is at "IN" position the balls, No. 15, clear the drive shaft, No. 1, and a clutch, No. 4, contacts drive pulley, No. 3, and gives a direct drive on shaft, No. 1.

If drive should ever slip on the "IN" position you will likely find that set screws, No. 5, have become loose in clutch, No. 5. To reset clutch place shaft, No. 1, at "OUT" position. you can tell when it is at "OUT" position by the feel as just after the ball, No. 15, comes up the incline on the shaft, No. 1, it will locate in a very shallow groove on the shaft, No. 1, see that the clutch, No. 4, is against frame, No. 16, and then tighten set screws, No. 5, securely.

If the band switch knob, No. 9, appears to have excessive backlash, you will generally find that it was forced when the switch was at end of its rotation and the set screws, No. 12, are broken loose, tighten these screws and if backlash still appears, loosen screw and adjust bracket and screw, No. 14.

When placing knobs, No. 9 and No. 10, on shafts, be sure knob, No. 9, clears cabinet approximately 3/64 and tighten set screw, No. 8, securely. With shaft, No. 1, at the "IN" position place knob No. 10, on shaft No. 1, until it stops against knob No. 9, then pull to the front 3/64 inch and tighten set screw No. 8, securely.

CASE ELECTRIC CORPORATION--MARION, INDIANA-

SERVICE NOTES

In the event of failure of the receiver, time may often be saved by making a few preliminary checks before removal of the chassis and speaker from the cabinet.

1. Check the antenna and ground connections both at the receiver and also at all points where joints have been made. Noisy operation can often be traced to faults in antenna and ground installation especially when the receiver has been connected to an old antenna.

2. Check the tubes. If a reliable tube checking instrument is not at hand, secure a set of known good tubes and interchange the tubes in the receiver, one at a time, until the defective tube is located. Low sensitivity can often be traced to gas or grid current in an RF, first detector or IF tube. Hum is often due to heater-cathode shorts in any one of the tubes.

If the above checks do not disclose the reason for failure of the receiver remove the chassis and speaker from the cabinet and check the supply voltages as indicated on the chart. To assist in the location of the various tube prongs, the schematic diagram tube symbols have been so drawn as to represent the socket as viewed from the bottom of the chassis.

Hum, motorboating, low volume and low voltage may be due to shorted or defective electrolytic condensers.

Open bypass condensers often cause oscillation or distorted tone. To check for this condition, shunt each condenser with another of similar capacity and of the same voltage rating until the defective unit is located.

Shorted bypass condensers cause low voltage or weak reception. Remove suspected unit and replace by one of correct capacity and rating.

In checking circuits connected to the electrolytic condensers it is necessary to observe the polarity of the leads of the continuity meter. Use the meter with the positive test terminal on the anode or plus side of the circuit. If the reverse connection is used the electrolytic condenser will become conductive and show a false low resistance reading.

©John F. Rider, Publisher

CHAMPION RADIO

MODEL 5-Tube, 3-Band Schematic

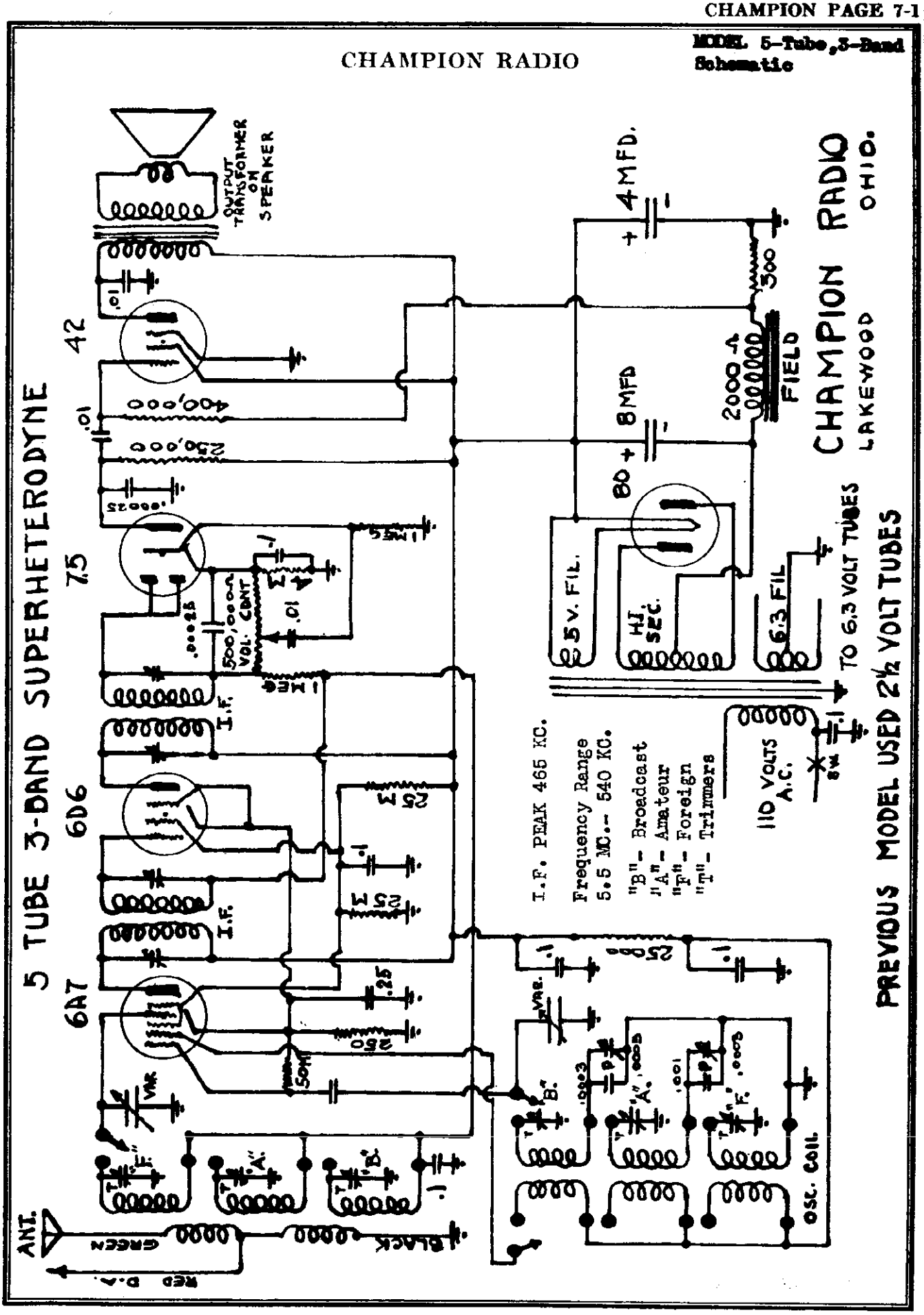

©John F. Rider, Publisher

MODEL 6-Tube, 3-Band
Schematic

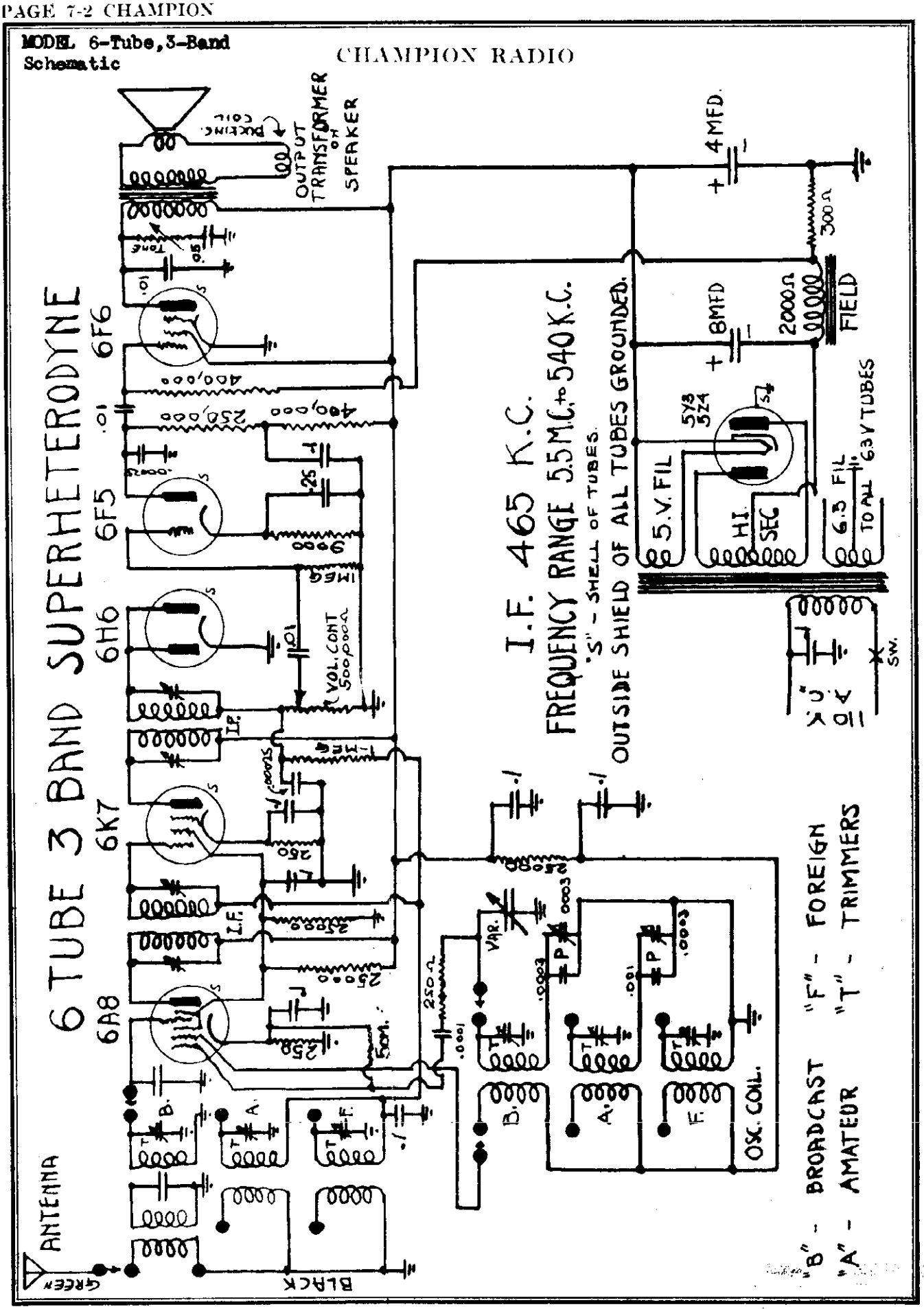

©John F. Rider, Publisher

CHAMPION RADIO

MODEL 4-Tube, AC-DC
MODEL 42
Schematics

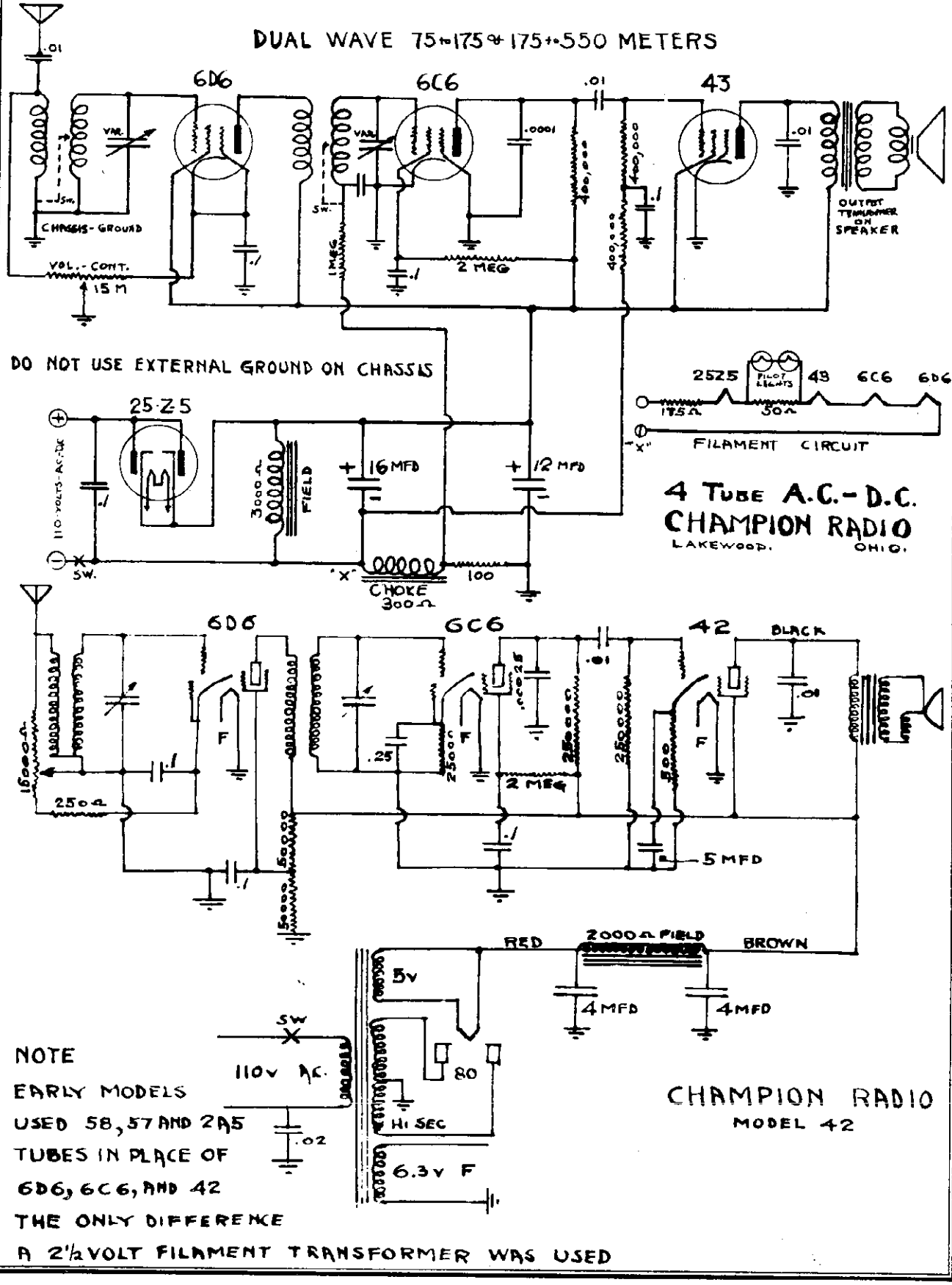

©John F. Rider, Publisher

MODEL 52
MODEL 52-DWG
Schematics

CHAMPION RADIO

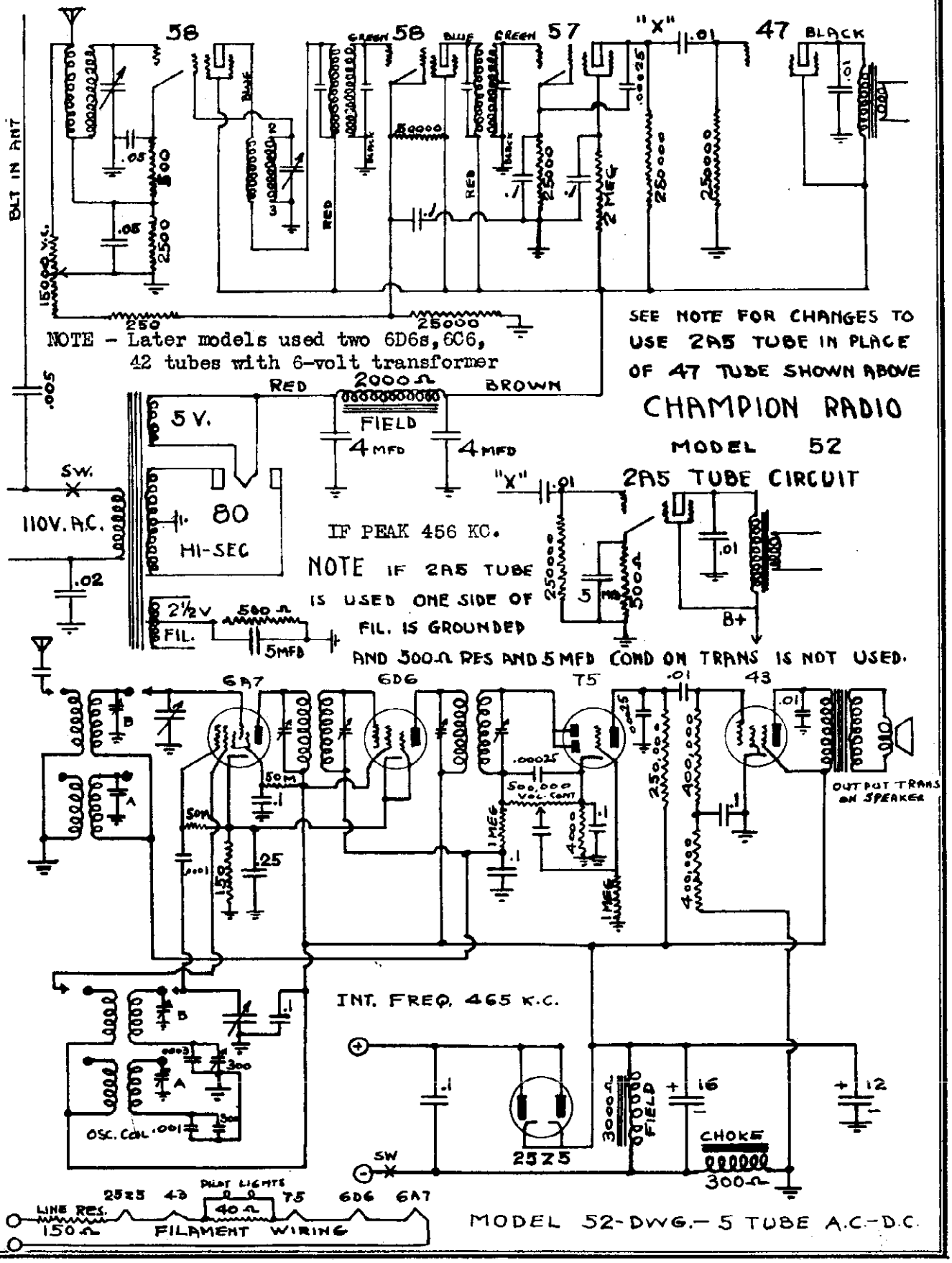

©John F. Rider, Publisher

CHAMPION RADIO

MODELS 40-R, 40-DW
40-RM, 40-DWM
MODEL 52
Schematics, Notes

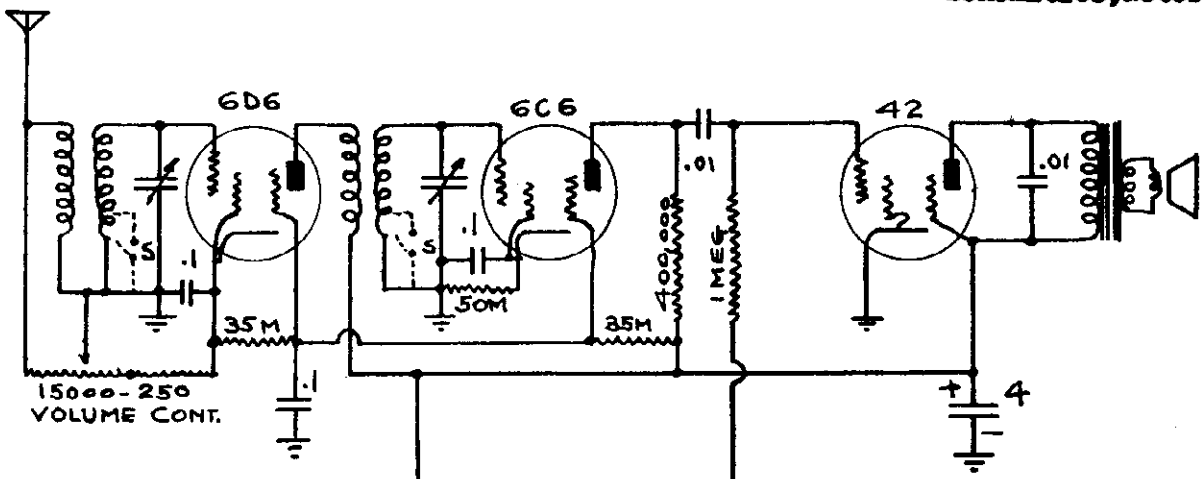

Models 40-R and 40-DW

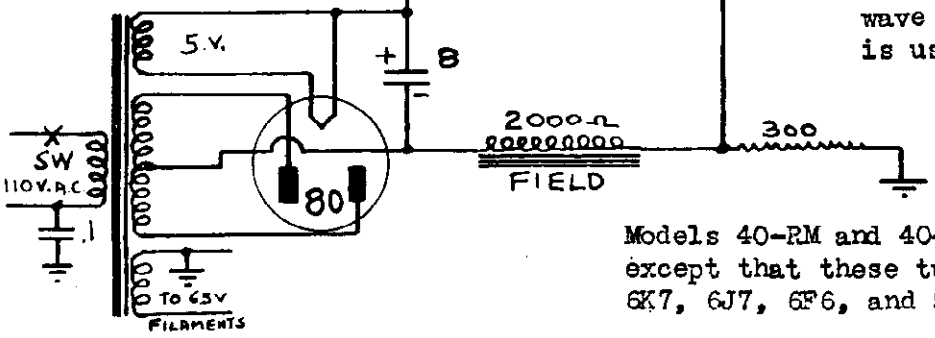

NOTE Model 40-DW is short wave when Switch S is used.

Models 40-RM and 40-DWM are similar except that these tubes are used: 6K7, 6J7, 6F6, and 5Z4.

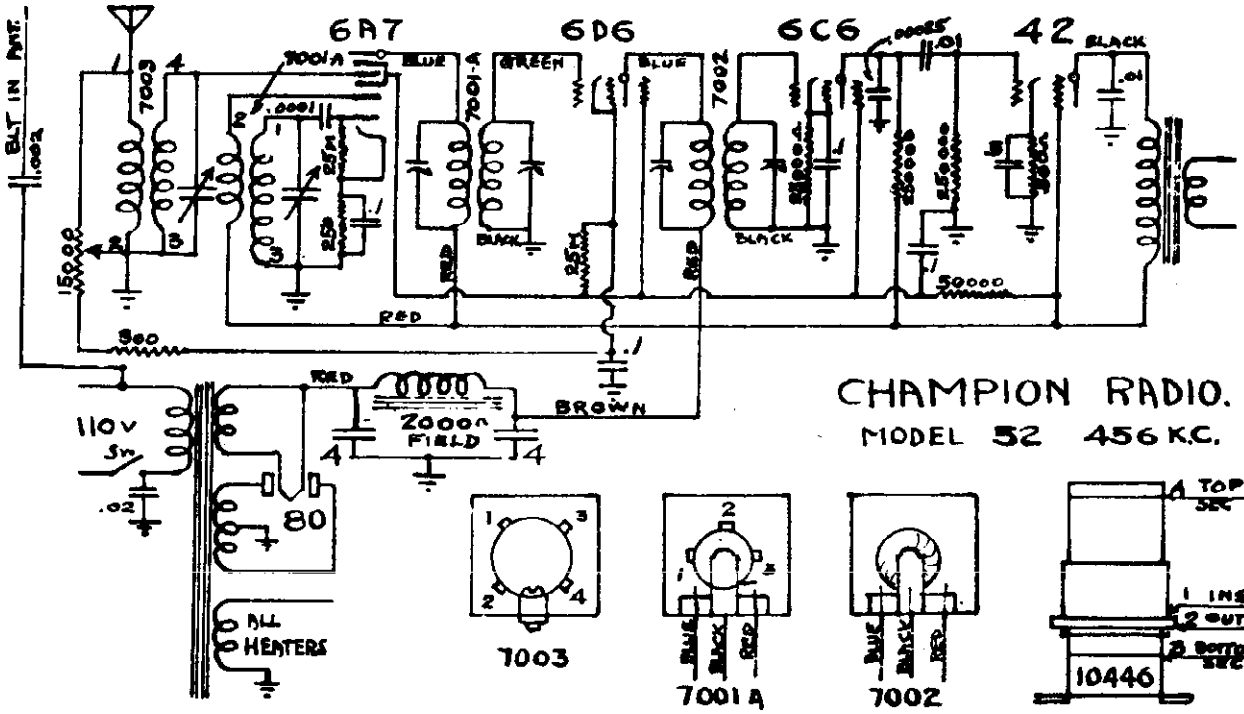

CHAMPION RADIO.
MODEL 52 456 K.C.

NOTE - Early models used 2.5-volt transformer and 2A7, 58, 57, and 2A5 tubes. Where unshielded antenna coil is used, No. 10446 replaces No. 7003.

©John F. Rider, Publisher

MODEL 500
Schematic

CHAMPION RADIO

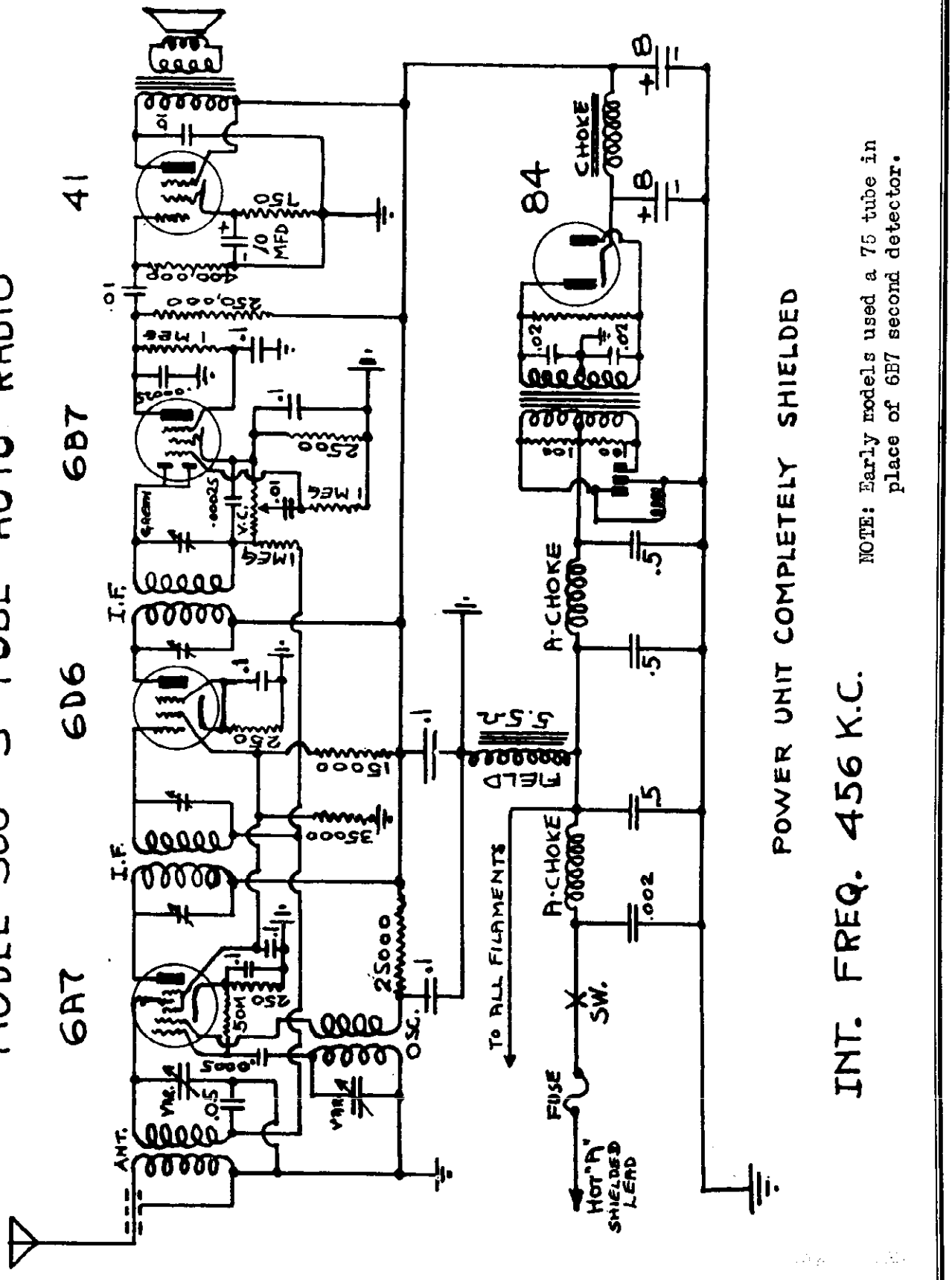

©John F. Rider, Publisher

CHAMPION RADIO

MODEL 501
MODEL 558
Schematics

MODEL 501 - 5 TUBE AUTOMOBILE RADIO

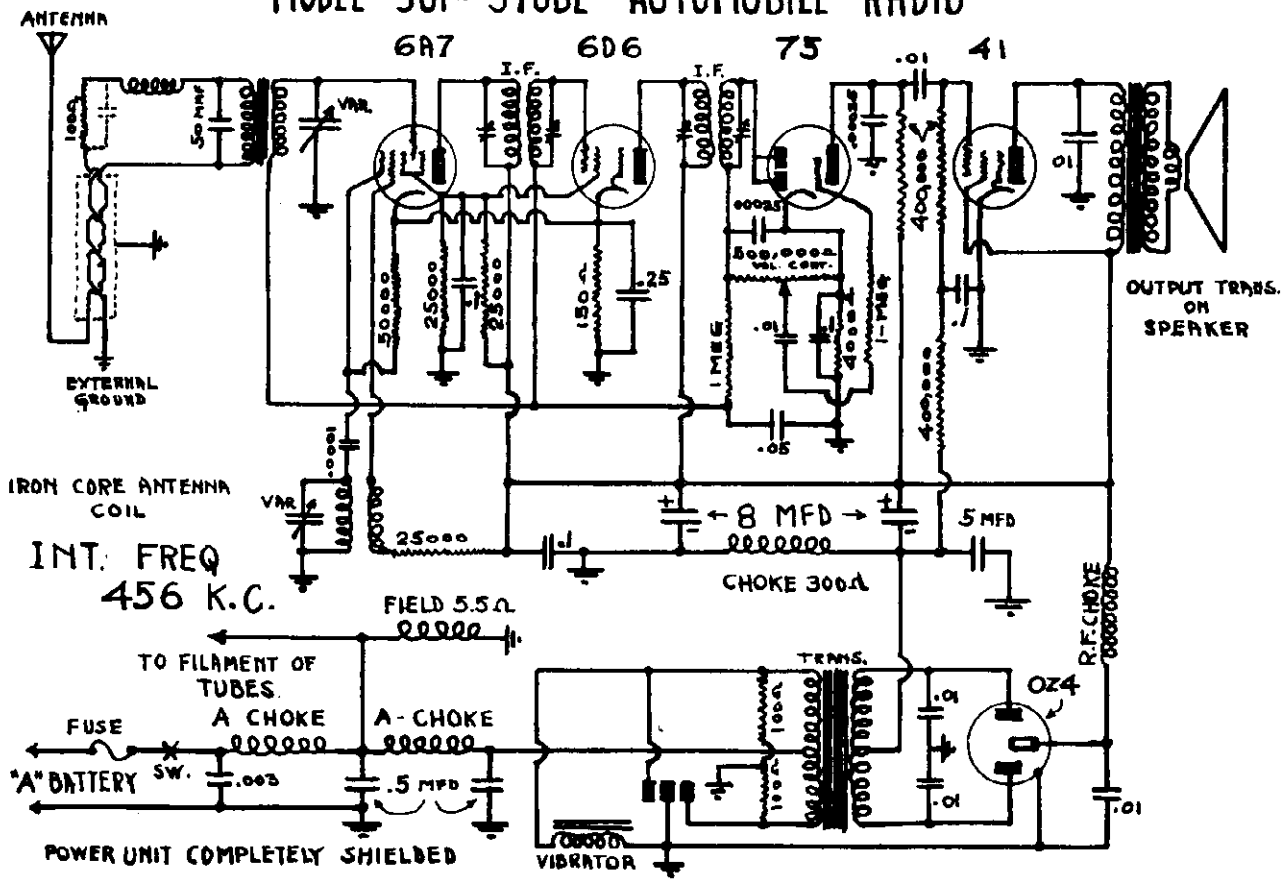

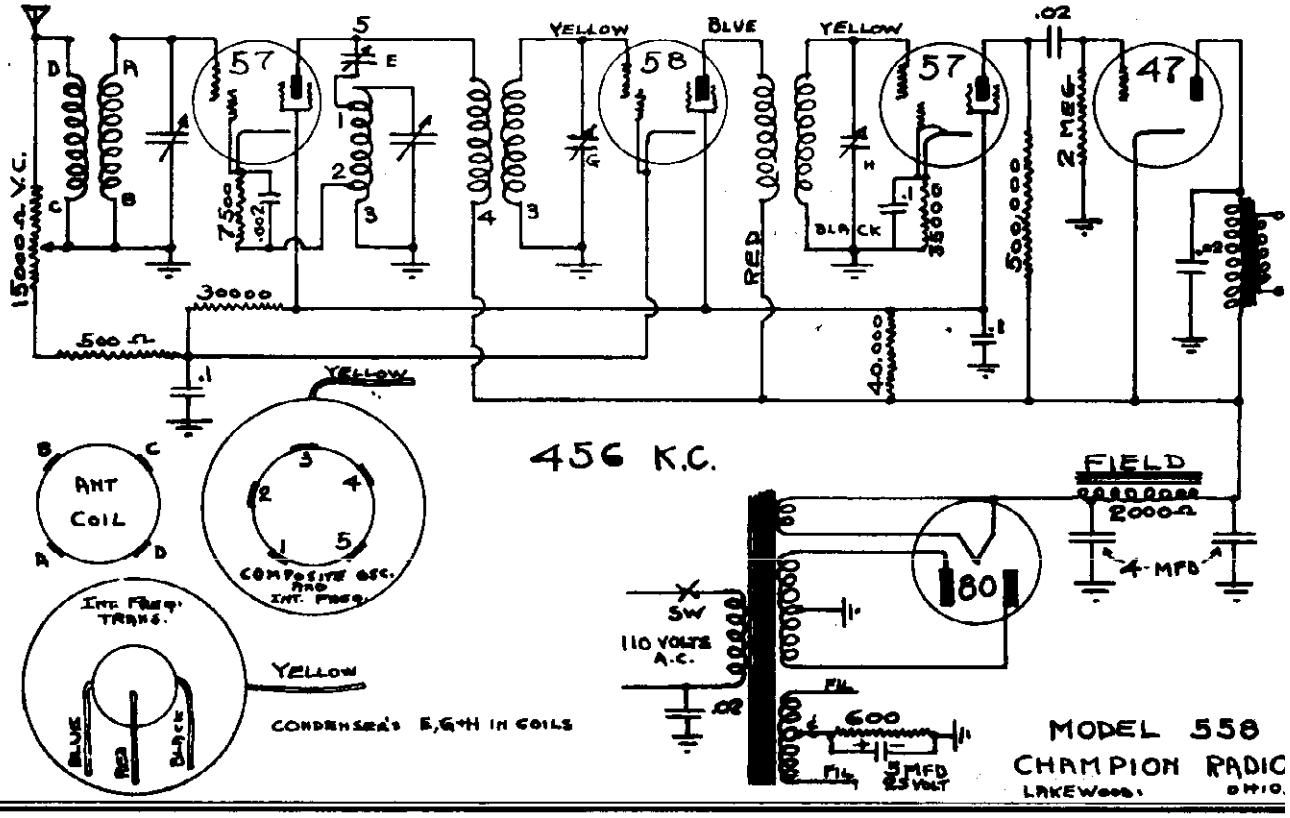

MODEL 558
CHAMPION RADIO
LAKEWOOD, OHIO.

©John F. Rider, Publisher

MODEL 600
Schematic

CHAMPION RADIO

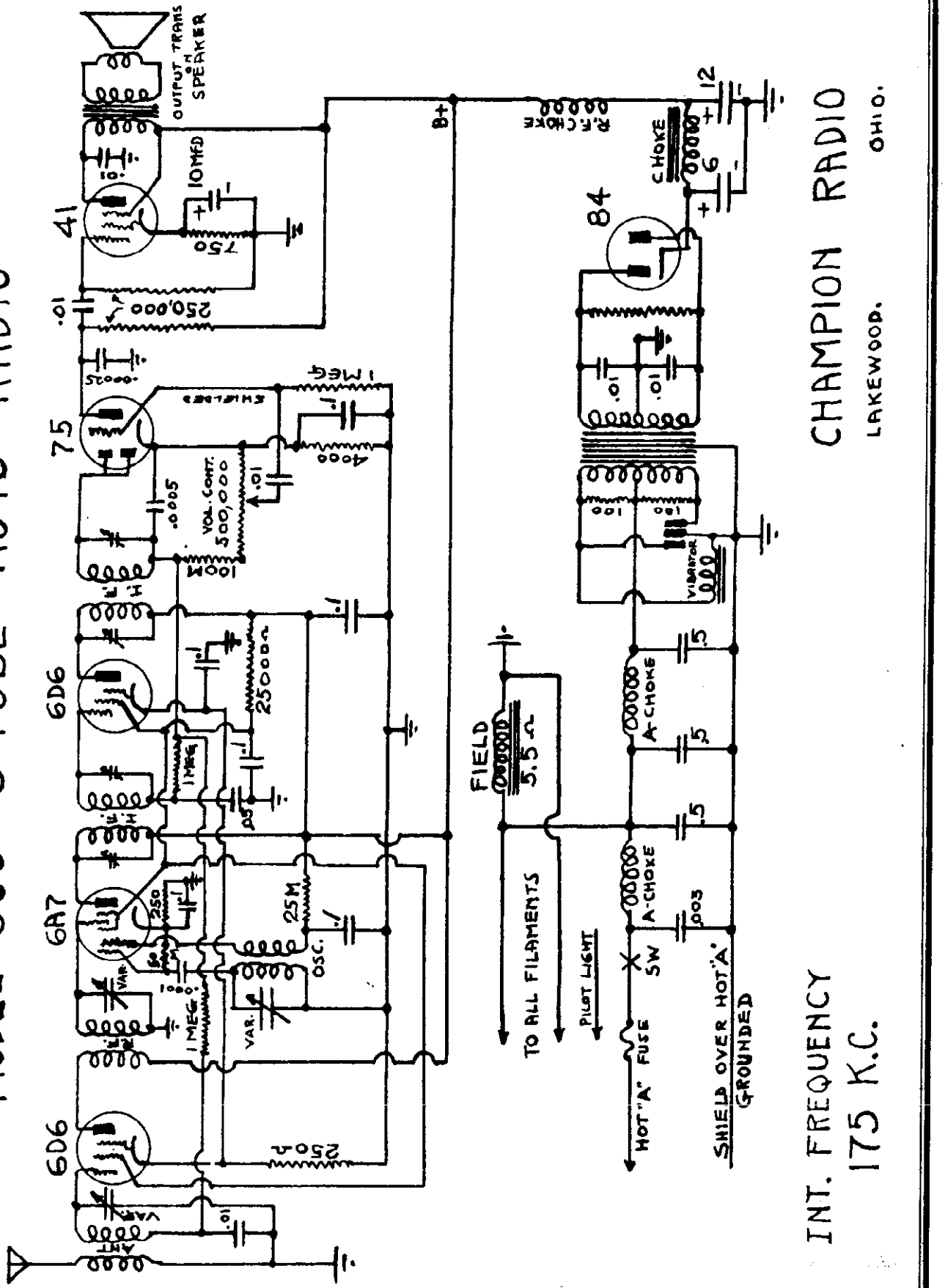

CHAMPION RADIO

MODEL 601
Schematic

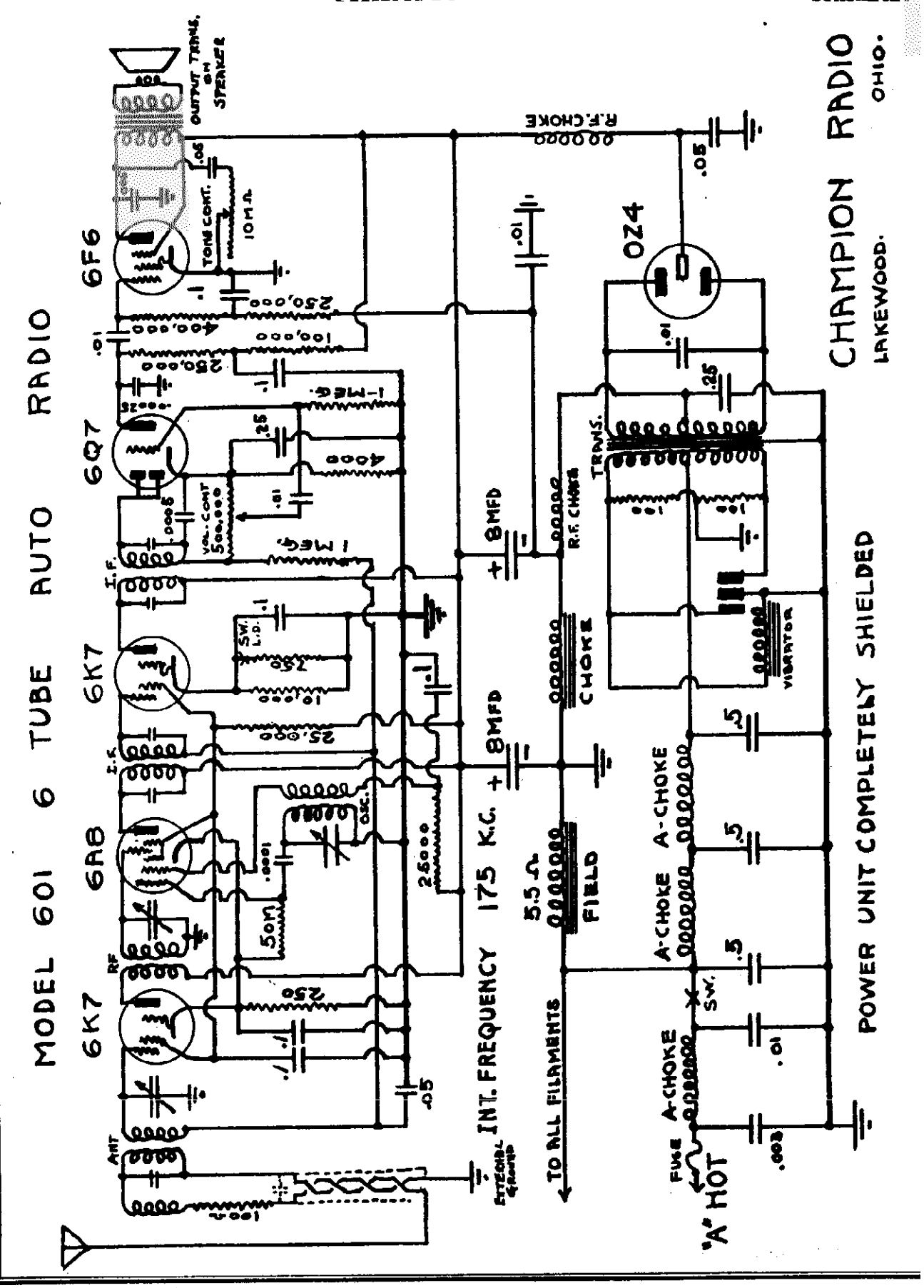

©John F. Rider, Publisher

Coil Connections Data

CHAMPION RADIO

FILAMENT WIRING OF MODELS 52-DWG & 41-PG A.C.D.C.
ALSO SHOWING FILTER CONNECTIONS AND "B" POS. LEADS

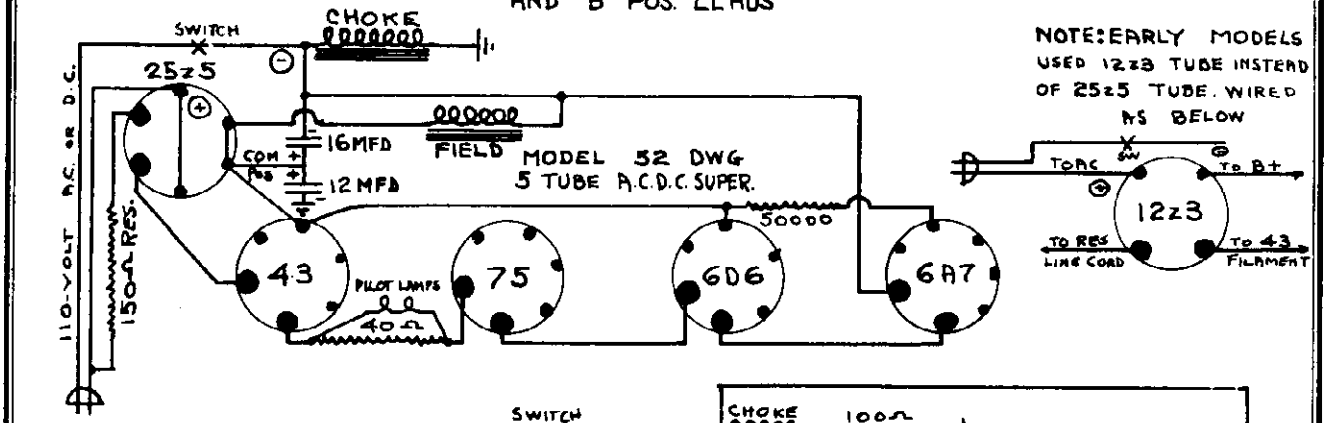

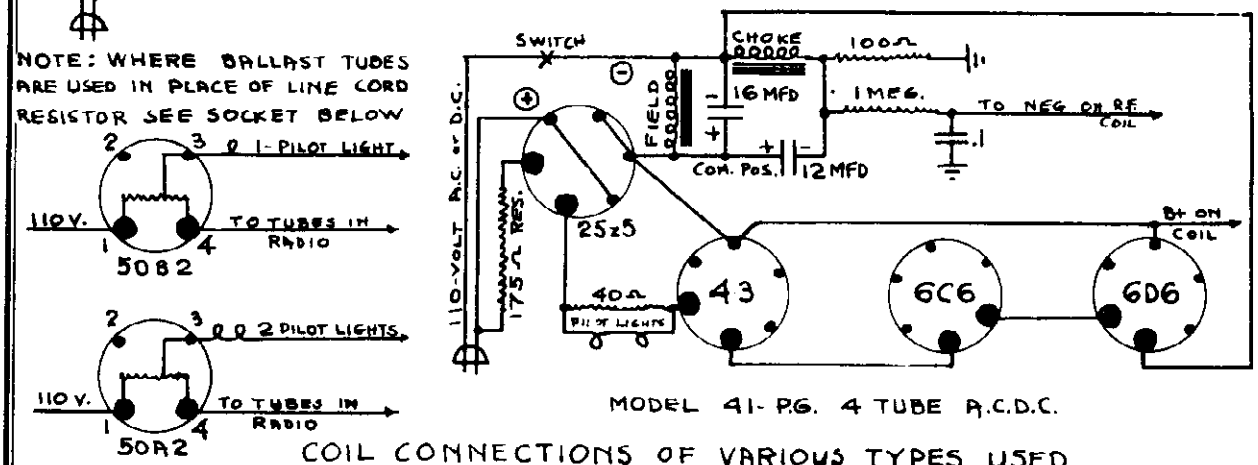

MODEL 41-PG. 4 TUBE A.C.D.C.

COIL CONNECTIONS OF VARIOUS TYPES USED

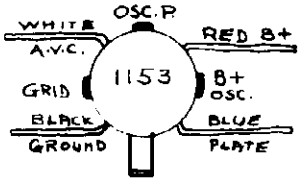

175 K.C. COMPOSITE

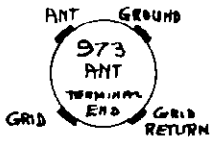

SUPER. ANT.

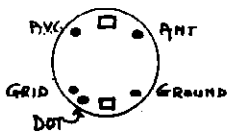

AUTO ANT

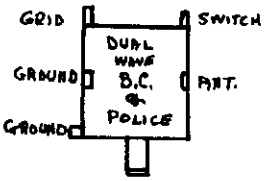

ANT.

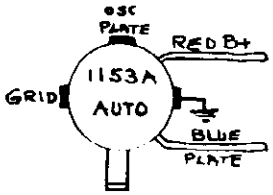

456 K.C. COMPOSITE

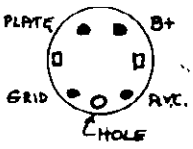

AUTO R.F.

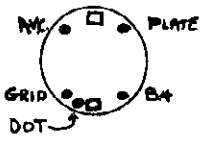

AUTO R.F.

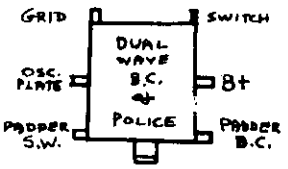

OSC. 456 K.C.

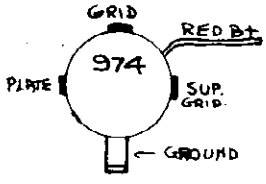

456 K.C. COMPOSITE

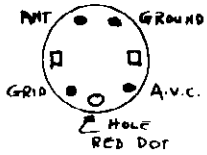

AUTO ANT

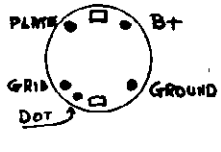

AUTO OSC. 175 KC.

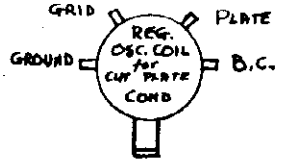

456 OSC B.C.

©John F. Rider, Publisher

CLIMAX RADIO & TELEV. CO., INC.

MODEL 4-Tube Batt.
MODEL 6-Tube Batt.
Schematics

LEGEND	PART NO.	DESCRIPTION
C_1-C_2-C_3	3001	Triple Tuner - 3-30 mmf. each Section
C_{11}-C_{12}	1005	Two Gang Variable Cond. - 420 mmf. each
C_4	1091	.0001 mf. Mica Condenser
C_5	1033	.001 mfd. Mica Condenser
C_6	1094	.002 mfd. Mica Condenser
C_7	1095	.5 Plate Padding Condenser
C_8	1080	.1 mf. - 200 V. Tubular Condenser
C_9	1035	.25 mfd. - 200 V. Tubular Condenser
C_{10}	1090	.00025 mf. Mica Cond.
C_{11}	1082	.01 mf. - 400 V. Tubular Condenser
C_{12}	1079	.005 mf. - 400 V. Tubular Condenser
C_{13}	2031	10 mfd. - 500 V. Electrolytic Condenser
T_1-T_2	909	High Gain I.F. Transformers (456 K.C.)
A_2	601	Broadcast Antenna Coil
A_3	602	Broadcast Interstage Coil
A_4	603	Shunted Untuned Interstage Coil
L_1	604	Antenna Isolating Choke

R_1	1072	10,000 ω 1/2 watt Resistor
R_2	1060	5,000 ω 1/2 watt Resistor
R_3	1039	2,500 ω 1/2 watt Resistor
R_4	1062	1 meg ohm 1/2 watt Resistor
R_5	1074	6 meg ohm 1/2 watt Resistor
R_6-R_7	1102	400-100 M Ohms Tapped Resistor
R_8	1071	50,000 ohm 1/2 watt Resistor
R_9	1037	500,000 ohm Volume Control

R_{10}	1105	100,000 ohm 1/2 watt Resistor
A_1	300	Three Band Antenna Coil
O_1	302	Three Band Oscillator Coil
S	713	Selector Switch (3 Point - 3 Position)
T_3	310	Driver Coupling I.F. Transformer
R_{11}	1091	500,000 ω 1/2 watt Resistor
R_{12}	1088	10,000 ω Volume Control
C_{14}-C_{15}	1087	Two Gang Variable Condenser
S_1	715	Battery Switch

©John F. Rider, Publisher

MODEL 4-Tube AC-DC
MODEL 5-Tube AC-DC
Schematics

CLIMAX RADIO & TELEV. CO., INC.

4 TUBE AC-DC RECEIVER

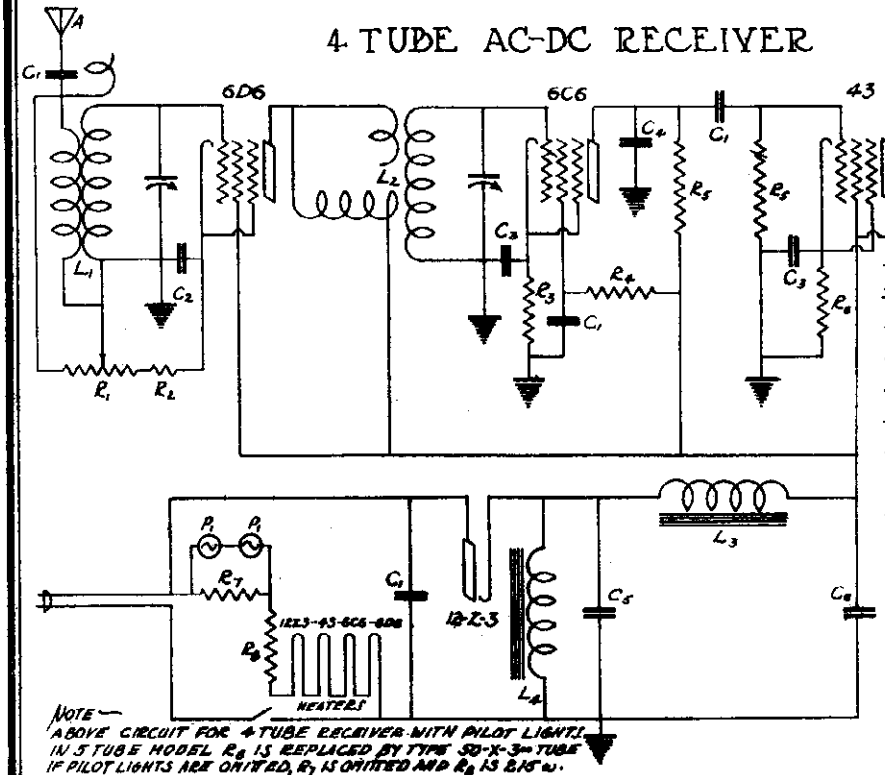

NOTE — ABOVE CIRCUIT FOR 4 TUBE RECEIVER WITH PILOT LIGHTS. IN 5 TUBE MODEL R_8 IS REPLACED BY TYPE 50-X-3 TUBE. IF PILOT LIGHTS ARE OMITTED, R_7 IS OMITTED AND R_8 IS 2.15 Ω.

LEGEND	PART No.	DESCRIPTION
C_1	1082	.01 mfd. - 400V. Tubular Cond.
C_2	1080	.1 mfd. - 200V. " "
C_3		10 mfd. 25V. Electrolytic Cond.
C_5	2031	20 mfd. 200V. " "
C_6		4 mfd. 200V. " "
R_1	1050	10,000 Ohm Volume Control
R_2		with 250 Ω R.H. Minimum.
R_3	1063	25,000 Ω ½ Watt Resistor
R_4	1073	3 Megohm ½ Watt Resistor
R_5	1061	½ " " " "
R_6	1069	600 Ω ½ Watt Resistor
R_7	1078	40 Ω 5 Watt Resistor
R_8	1079	1.75 Ω Resistance Line Cord
L_1	1029	High Impedance Antenna Coil
L_2	1030	" " Interstage "
L_3	750	400 Ω Filter Choke
C_{8-9-10}	2027	10 mfd-25V; 12-40 mfd 200V. El. Con.
C_4	1090	250 μμfd. Mica Condenser
C_7	1095	.25 mfd. - 200V. Tubular Cond.
R_9	1068	250,000 Ω ½ Watt Resistor
R_{10}	1065	150 Ω Resistance Line Cord
R_{11}	1074	6 Meg. ½ Watt Resistor
L_x		Short Wave Shunt

5 TUBE AC-DC RECEIVER

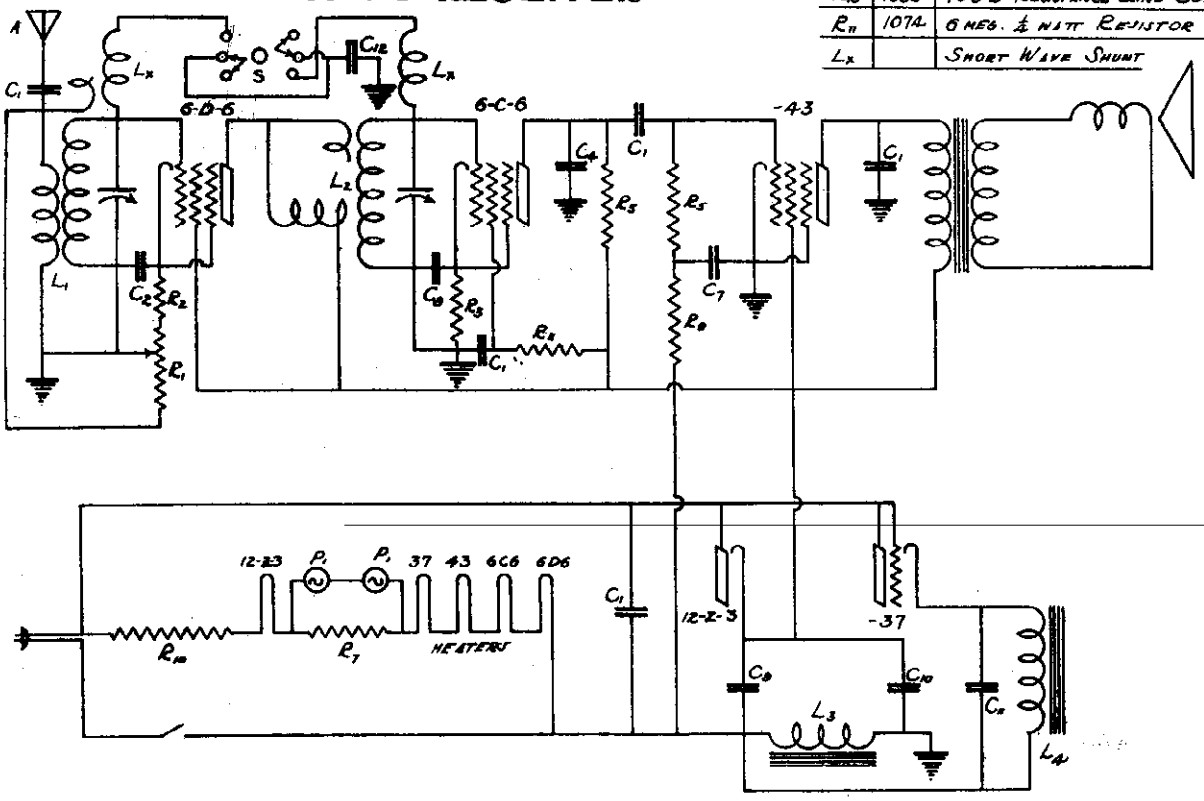

©John F. Rider, Publisher

CLIMAX RADIO & TELEV. CO., INC.

MODEL A
MODEL A
Schemati
Socket

4(5) TUBE T·R·F TWO BAND RECEIVER

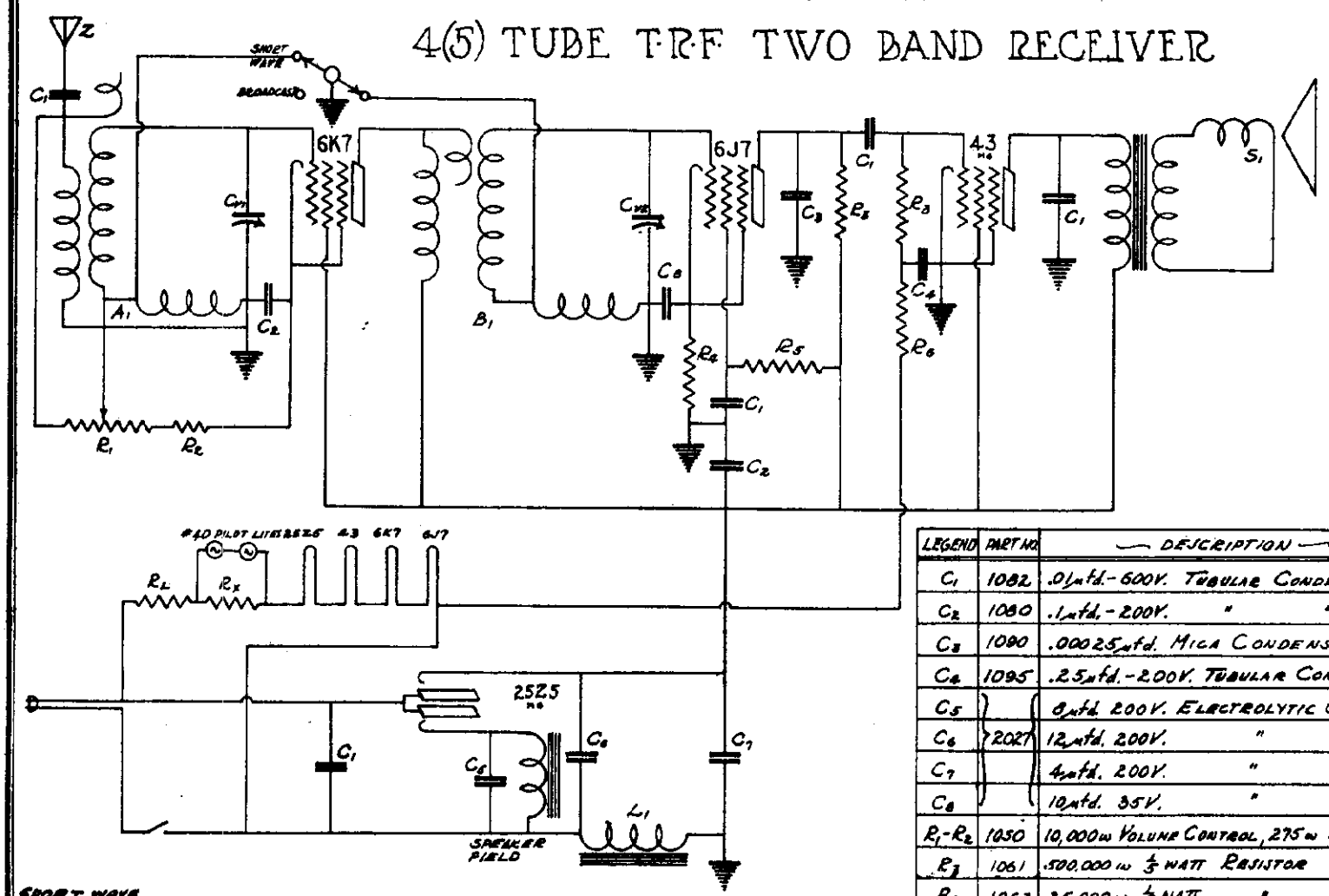

LEGEND	PART NO.	DESCRIPTION
C_1	1082	.01 mfd. - 600V. Tubular Condenser
C_2	1080	.1 mfd. - 200V. " "
C_3	1090	.00025 mfd. Mica Condenser
C_4	1095	.25 mfd. - 200V. Tubular Condenser
C_5	2027	8 mfd. 200V. Electrolytic Condenser
C_6		12 mfd. 200V. " "
C_7		4 mfd. 200V. " "
C_8		10 mfd. 35V. " "
R_1-R_2	1050	10,000 ω Volume Control, 275 ω R.H. Min.
R_3	1061	500,000 ω ½ Watt Resistor
R_4	1063	25,000 ω ½ Watt "
R_5	1073	3 Megohm ½ Watt "
R_6	1068	250,000 ω ½ Watt "
R_L	1067	150 ω Resistance Line Cord.
S_1	1009	5" Dynamic Speaker - 2500 ω Field.
L_1	750	Filter Choke - 10 Hys. - 400 ω - 40 M.A.
X	716	Short Wave Switch

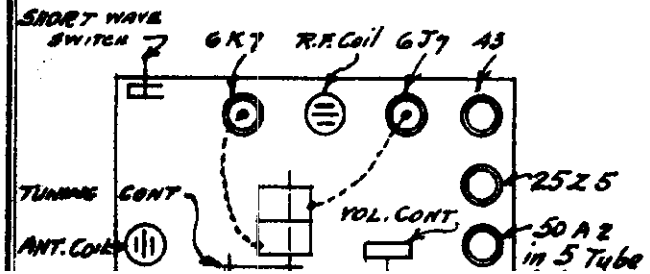

MODELS
AA & AAX

MODELS AB, ABX
Early
Schematic, Socket

CLIMAX RADIO & TELEV. CO., INC.

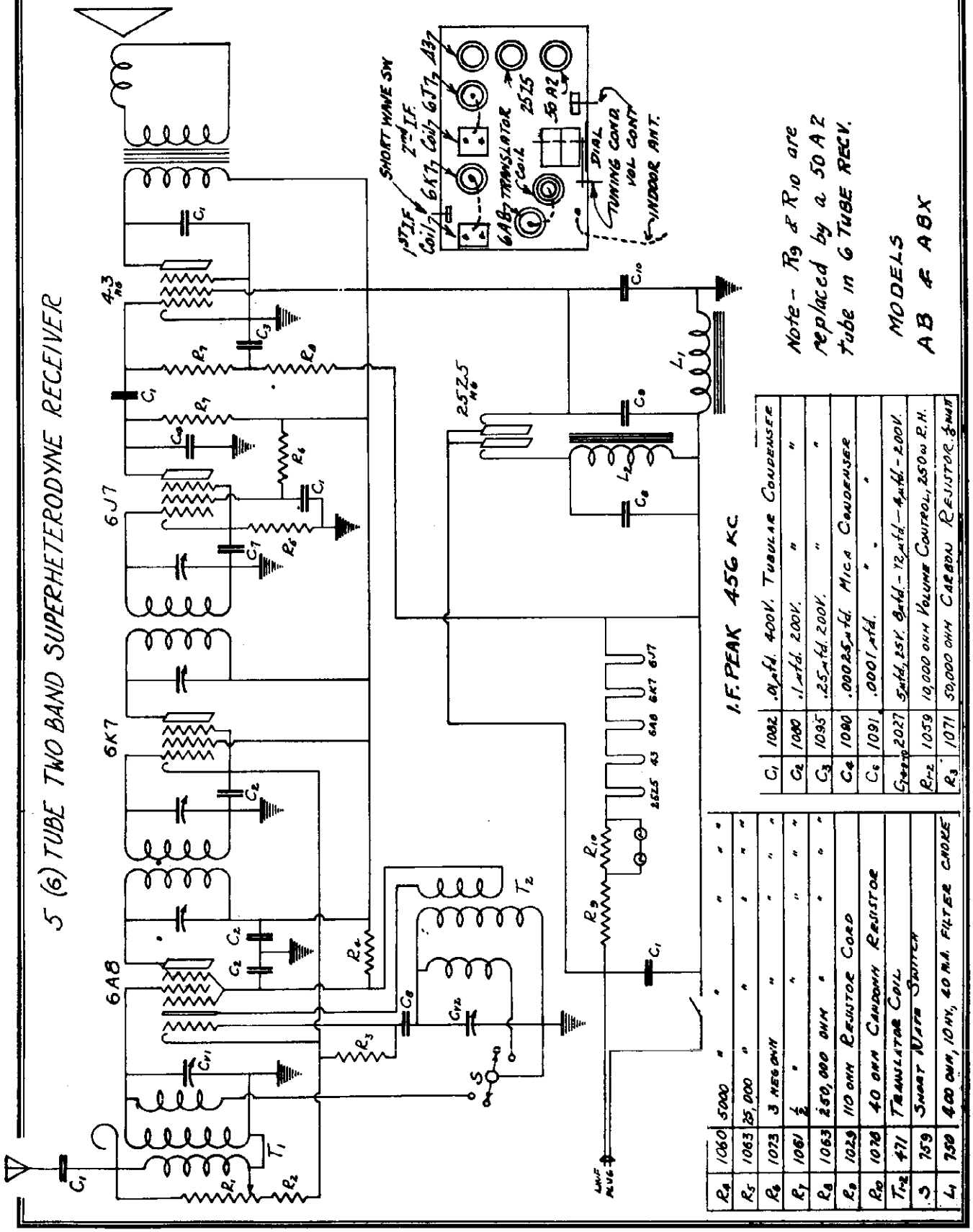

C_1	1082	.01 mfd. 400V. Tubular Condenser	
C_2	1080	.1 mfd. 200V. "	"
C_3	1095	.25 mfd. 200V. "	"
C_4	1080	.00025 mfd. Mica Condenser	
C_5	1091	.0001 mfd. "	"
Gang	2027	5 mfd. 25V. Gang - 12 mfd. - 4 mfd. - 200V.	
R_{12}	1059	10,000 ohm Volume Control, 250 ω R.H.	
R_3	1071	50,000 ohm Carbon Resistor, ½ watt	

R_4	1060	5000	" " " "
R_5	1063	25,000	" " " "
R_6	1073	3 Meg ohm	" " " "
R_7	1061	½	" " " "
R_8	1063	250,000 ohm	" " " "
R_9	1029	110 ohm Resistor Cord	
R_{10}	1078	40 ohm Cathode Resistor	
T_{12}	471	Translator Coil	
S	759	Short Wave Switch	
L_1	750	400 ohm, 10 hy, 40 m.a. Filter Choke	

©John F. Rider, Publisher

MODEL ABX 6 TUBE 2 BAND SUPERHETERODYNE RECEIVER *AC-DC* TYPE

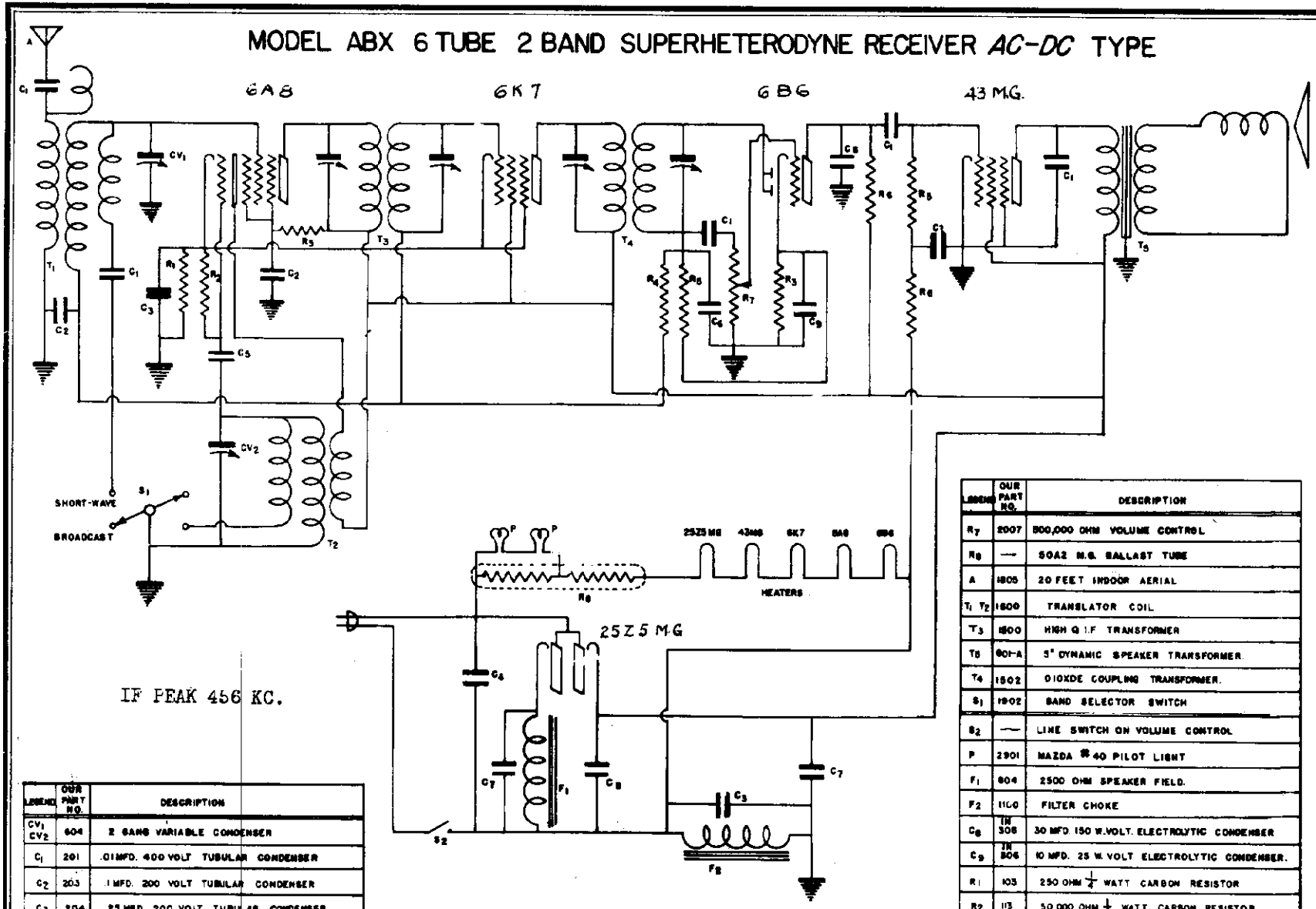

LEGEND	OUR PART NO.	DESCRIPTION
CV_1 CV_2	604	2 GANG VARIABLE CONDENSER
C_1	201	.01 MFD. 400 VOLT TUBULAR CONDENSER
C_2	203	.1 MFD. 200 VOLT TUBULAR CONDENSER
C_3	204	.25 MFD. 200 VOLT TUBULAR CONDENSER
C_4	205	.05 MFD. 400 VOLT TUBULAR CONDENSER
C_5	400	.0001 MFD. MICA CONDENSER
C_6	401	.00025 MFD. MICA CONDENSER
C_7	305	4 MFD. 150 W. VOLT ELECTROLYTIC CONDENSER

LEGEND	OUR PART NO.	DESCRIPTION
R_7	2007	500,000 OHM VOLUME CONTROL
R_8	—	50A2 M.G. BALLAST TUBE
A	1805	20 FEET INDOOR AERIAL
T_1 T_2	1800	TRANSLATOR COIL
T_3	1800	HIGH Q I.F. TRANSFORMER
T_5	601-A	5" DYNAMIC SPEAKER TRANSFORMER.
T_4	1802	010XDE COUPLING TRANSFORMER.
S_1	1902	BAND SELECTOR SWITCH
S_2	—	LINE SWITCH ON VOLUME CONTROL
P	2901	MAZDA #40 PILOT LIGHT
F_1	804	2500 OHM SPEAKER FIELD.
F_2	1100	FILTER CHOKE
C_8	IN 308	30 MFD. 150 W. VOLT. ELECTROLYTIC CONDENSER
C_9	IN 306	10 MFD. 25 W. VOLT ELECTROLYTIC CONDENSER.
R1	103	250 OHM $\frac{1}{2}$ WATT CARBON RESISTOR
R2	113	50,000 OHM $\frac{1}{2}$ WATT CARBON RESISTOR
R_3	108	5000 OHM $\frac{1}{2}$ WATT CARBON RESISTOR
R_4	119	1 MEGOHM $\frac{1}{2}$ WATT CARBON RESISTOR
R_5	117	$\frac{1}{2}$ MEGOHM $\frac{1}{2}$ WATT CARBON RESISTOR
R_6	116	$\frac{1}{4}$ MEGOHM $\frac{1}{2}$ WATT CARBON RESISTOR

CLIMAX RADIO & TELEV. CO., INC.

MODEL ABX, Late
Schematic

MODEL A-4
MODEL M-4
Schematics

CLIMAX RADIO & TELEV. CO., INC.

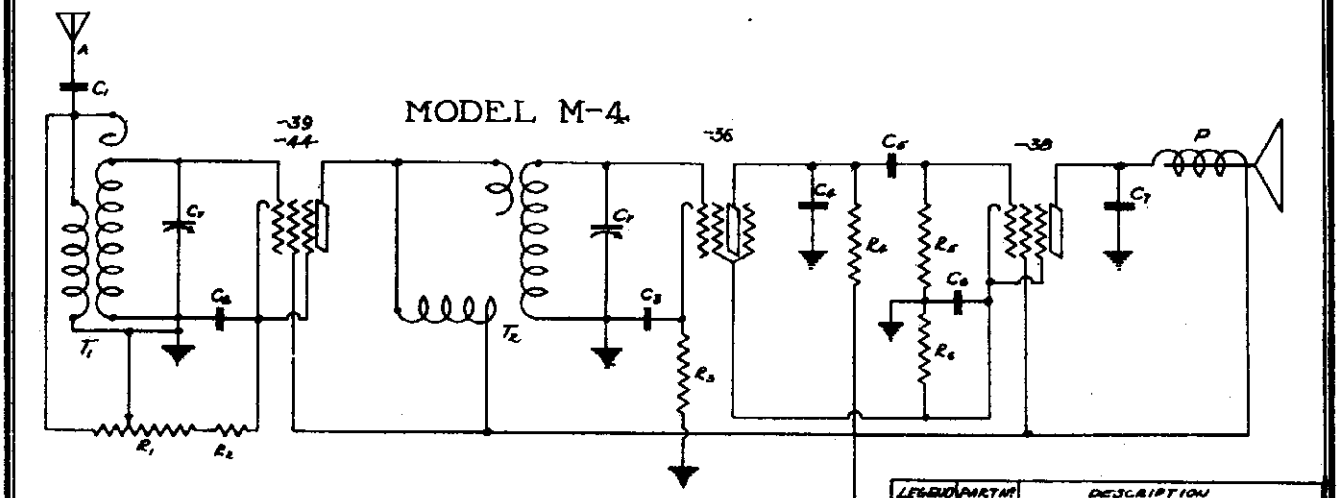

LEGEND	PART NO	DESCRIPTION
A	800	INDOOR ANTENNA
T_1	1029	H.I. ANTENNA COIL
T_2	1030	H.I. R.F. COIL
P	1000	MAGNETIC SPEAKER
C_1-C_4	1001	TWO GANG VARIABLE CONDENSER
C_5-C_6-C_7	1082	0.01 mfd. 400V. TUBULAR COND.
C_3-C_8	2006	DUAL 10 mfd. 25V. ELECT. COND.
C_8-C_9		8-4 mfd. 200V. ELECT. COND.
C_{10}	1090	0.00025 mfd. MICA CONDENSER
C_{11}	1080	0.1 mfd. 200V. TUBULAR COND.
R_1-R_2	1050	10,000 OHM VOLUME CONTROL & SWITCH
R_3	1063	25,000 OHM ½ WATT RESISTOR
R_4	1061	500,000 " " " "
R_5	1062	1 MEGOHM " " "
R_6	1068	1000 OHM ½ " "
R_7	1069	600 " " " "
R_8	1066	285 OHM RESISTOR LINE CORD

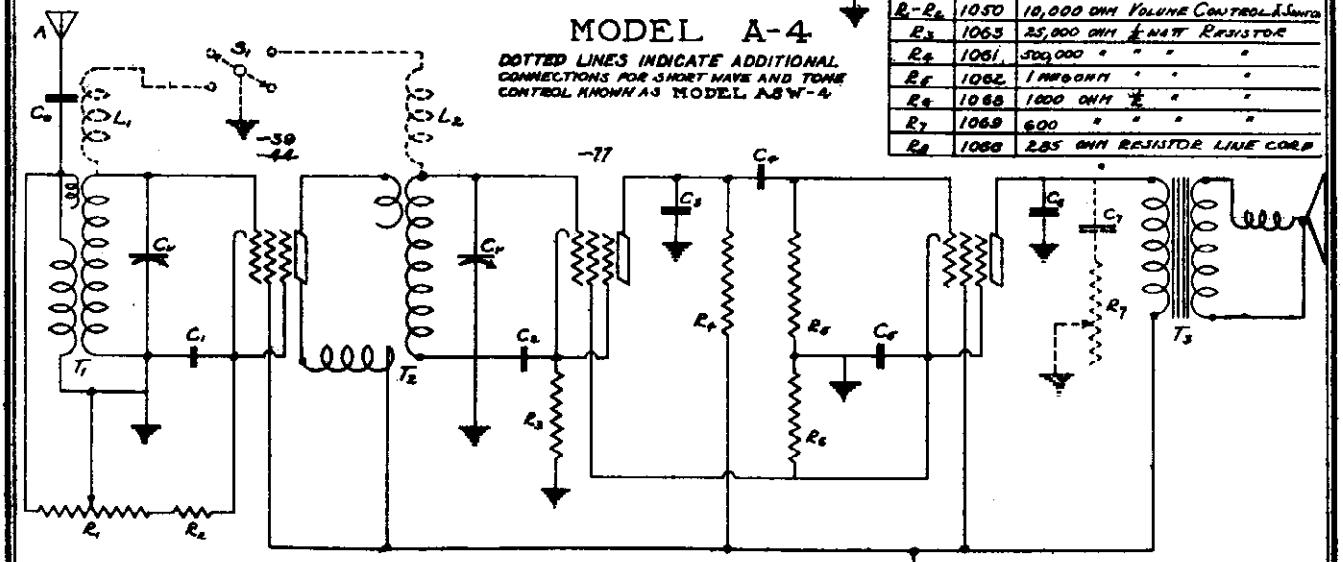

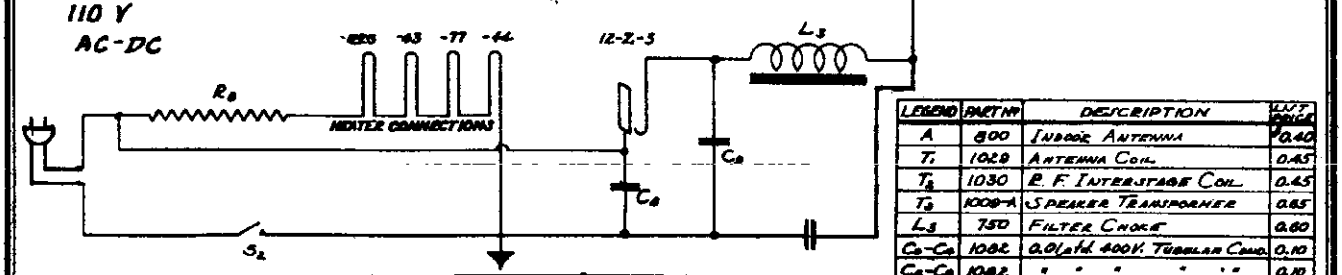

LEGEND	PART NO	DESCRIPTION	LIST PRICE
A	800	INDOOR ANTENNA	0.40
T_1	1029	ANTENNA COIL	0.45
T_2	1030	R.F. INTERSTAGE COIL	0.45
T_3	1008-A	SPEAKER TRANSFORMER	0.85
L_3	750	FILTER CHOKE	0.60
C_4-C_6	1082	0.01 mfd. 400V. TUBULAR COND.	0.10
C_5-C_6	1082	" " " " "	0.10
C_{10}	1090	250 mmfd. MICA CONDENSER	0.15
C_{11}	1080	0.1 mfd. 200V. TUBULAR COND.	0.10
C_1-C_4	1000	TWO GANG VARIABLE COND.	1.80
C_3-C_8	2005	DUAL 10 mfd. 35V. EL. COND.	0.80
C_8-C_9	2004	20-4 mfd. 250V. EL. COND.	1.20
R_1-R_2	1050	VOLUME CONTROL & SWITCH	0.90

LEGEND	PART NO	DESCRIPTION	LIST PRICE
S_1	1051	SELECTOR SWITCH ON TONE CONTROL	1.00
L_1-L_2	1031	SHORT WAVE SHUNTS	0.15
	1009	DYNAMIC SPEAKER	3.80
C_7	1083	0.05 mfd. 400V. TUBULAR COND.	0.10
S_2		AC SWITCH ON VOLUME CONTROL	

R_3	1063	25,000 OHM ½ WATT RESISTOR	0.12
R_4	1062	1 MEGOHM ½ WATT "	0.12
R_5	1061	½ " " " "	0.12
R_6	1068	600 OHM ½ " "	0.15
R_7	1067	50,000 OHM TONE CONTROL	1.00
R_8	1067	2.00 OHM LINE CORD & PLUG	0.85

©John F. Rider. Publisher

MODEL KSW-4
MODEL Lee SW-5
Schematics

CLIMAX RADIO & TELEV. CO., INC.

MODEL KSW-4

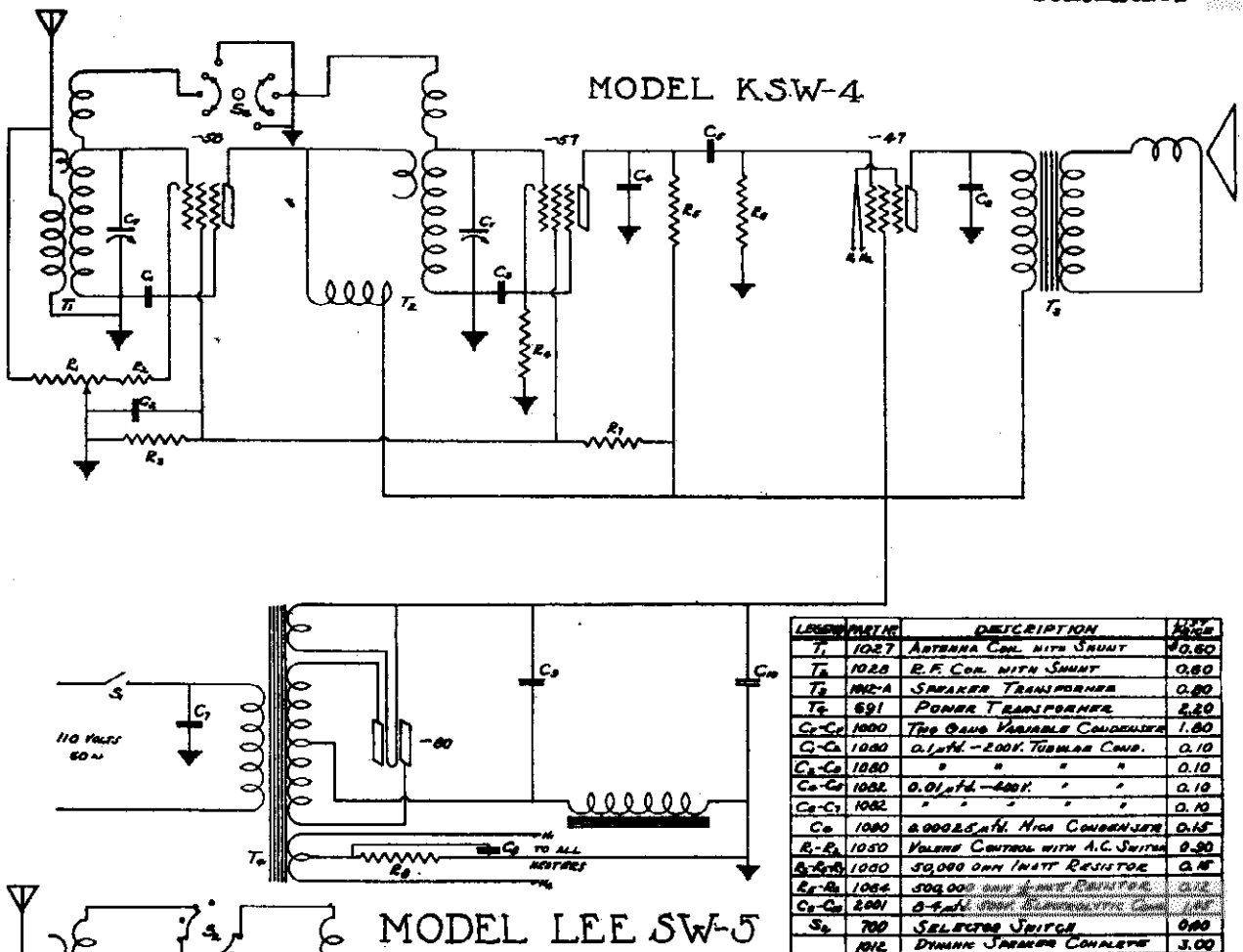

LEGEND	PART NO	DESCRIPTION	PRICE
T_1	1027	Antenna Coil with Shunt	$0.60
T_2	1028	R.F. Coil with Shunt	0.60
T_3	1012-A	Speaker Transformer	0.80
T_4	691	Power Transformer	2.20
C_1-C_6	1000	Two Gang Variable Condenser	1.80
C_1-C_4	1060	0.1 mfd. – 200 V. Tubular Cond.	0.10
C_2-C_5	1080	" " " "	0.10
C_3-C_7	1082	0.01 mfd. – 400 V. " "	0.10
C_8-C_7	1082	" " " "	0.10
C_8	1080	0.00025 mfd. Mica Condenser	0.15
R_1-R_2	1050	Volume Control with A.C. Switch	0.90
R_3-R_4-R_5	1000	50,000 ohm 1 watt Resistor	0.15
R_6-R_8	1064	500,000 ohm ½ watt Resistor	0.12
C_9-C_{10}	2001	8-4 mfd. 450 V. Electrolytic Cond.	1.40
S_1	700	Selector Switch	0.80
	1012	Dynamic Speaker Complete	3.00

MODEL LEE SW-5

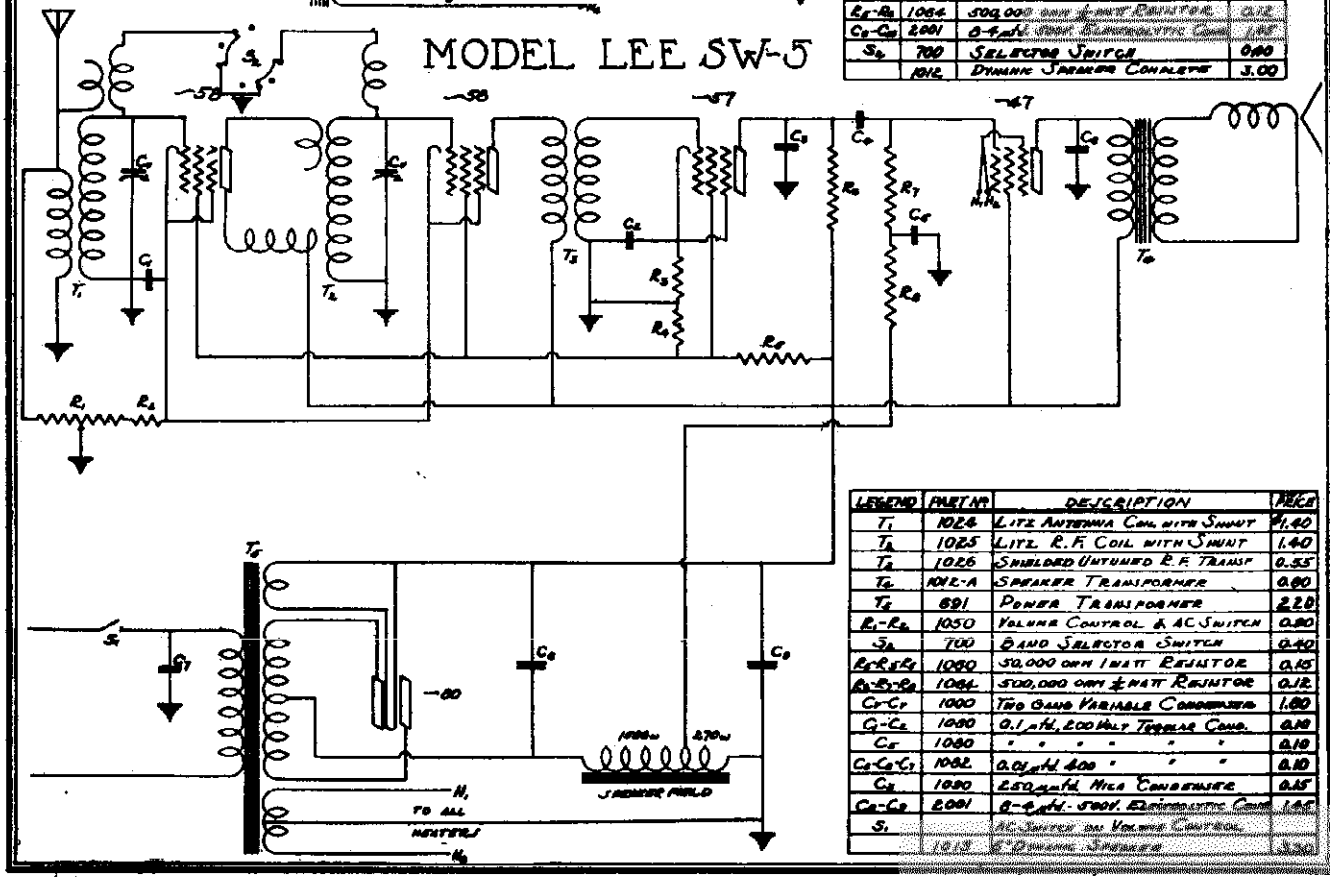

LEGEND	PART NO	DESCRIPTION	PRICE
T_1	1024	Litz Antenna Coil with Shunt	$1.40
T_2	1025	Litz R.F. Coil with Shunt	1.40
T_3	1026	Shielded Untuned R.F. Transf	0.55
T_4	1012-A	Speaker Transformer	0.80
T_5	691	Power Transformer	2.20
R_1-R_2	1050	Volume Control & AC Switch	0.80
S_1	700	Band Selector Switch	0.40
R_3-R_5-C_7	1000	50,000 ohm 1 watt Resistor	0.15
R_6-R_7-R_8	1064	500,000 ohm ½ watt Resistor	0.12
C_1-C_7	1000	Two Gang Variable Condenser	1.80
C_1-C_4	1060	0.1 mfd, 200 Volt Tubular Cond.	0.10
C_5	1060	" " " " "	0.10
C_6-C_8-C_7	1082	0.01 mfd 400 " " "	0.10
C_8	1080	250 mmfd. Mica Condenser	0.15
C_9-C_{10}	2001	8-4 mfd. 450 V. Electrolytic Cond.	1.40
S_2		AC Switch on Volume Control	
	1013	8" Dynamic Speaker	3.00

©John F. Rider, Publisher

MODEL 7
Schematic

CLIMAX RADIO & TELEV. CO., INC.

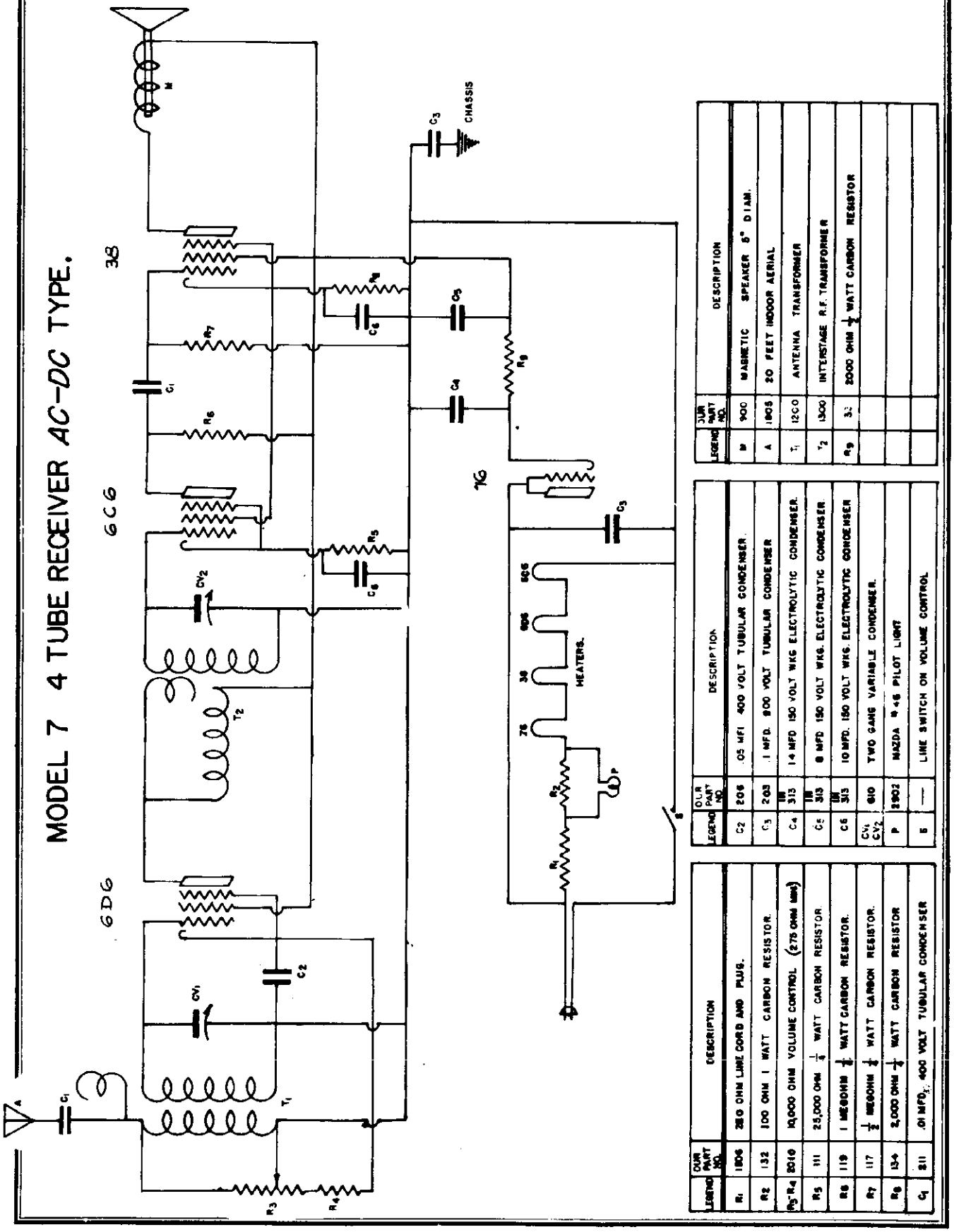

LEGEND	OLR PART NO.	DESCRIPTION
R_1	1806	250 OHM LINE CORD AND PLUG.
R_2	132	100 OHM 1 WATT CARBON RESISTOR.
R_3-R_4	2010	10,000 OHM VOLUME CONTROL (275 OHM taps)
R_5	111	25,000 OHM $\frac{1}{4}$ WATT CARBON RESISTOR.
R_6	119	1 MEGOHM $\frac{1}{2}$ WATT CARBON RESISTOR.
R_7	117	$\frac{1}{2}$ MEGOHM $\frac{1}{2}$ WATT CARBON RESISTOR.
R_8	134	2,000 OHM $\frac{1}{2}$ WATT CARBON RESISTOR
C_1	211	.01 MFD. 400 VOLT TUBULAR CONDENSER

LEGEND	OLR PART NO.	DESCRIPTION
C_2	205	.05 MFI 400 VOLT TUBULAR CONDENSER.
C_3	203	.1 MFD. 600 VOLT TUBULAR CONDENSER
C_4	313	14 MFD 150 VOLT WKG ELECTROLYTIC CONDENSER.
C_5	313	8 MFD 150 VOLT WKG. ELECTROLYTIC CONDENSER.
C_6	313	10 MFD. 150 VOLT WKG. ELECTROLYTIC CONDENSER
CV_1 CV_2	610	TWO GANG VARIABLE CONDENSER.
P	1902	MAZDA #46 PILOT LIGHT
S	—	LINE SWITCH ON VOLUME CONTROL

LEGEND	OLR PART NO.	DESCRIPTION
M	900	MAGNETIC SPEAKER 6" DIAM.
A	1803	20 FEET INDOOR AERIAL
T_1	1200	ANTENNA TRANSFORMER
T_2	1300	INTERSTAGE R.F. TRANSFORMER
R_9	32	2000 OHM $\frac{1}{2}$ WATT CARBON RESISTOR

©John F. Rider, Publisher

CLIMAX RADIO & TELEV. CO., INC.

MODEL 7-B
MODEL M
Schematics

MODEL 7B TWO BAND RECEIVER - AC DC TYPE

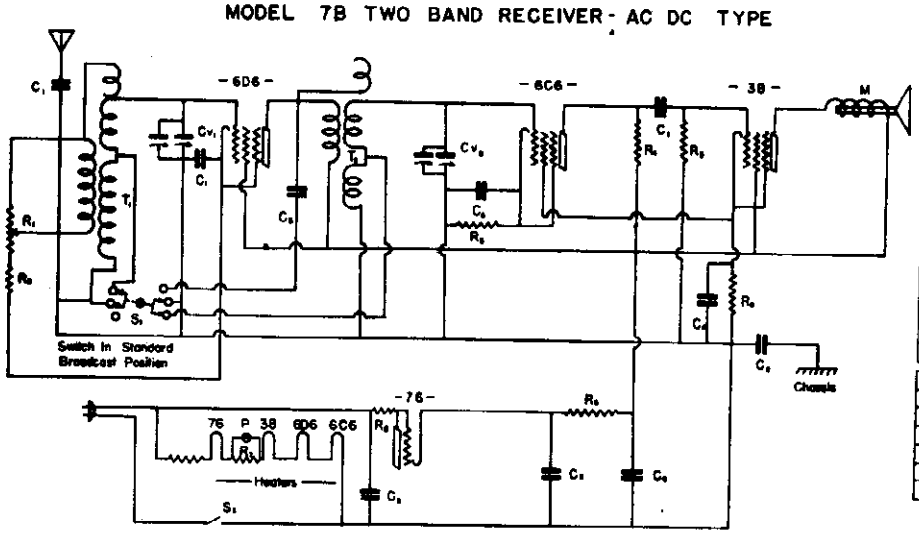

LEGEND	PART NO.	DESCRIPTION
C_1	28	.01 mfd. 400 Volt Tubular Condenser
C_2	203	1 mfd. 200 Volt Tubular Condenser
C_3	405	.0004 mfd. Mica Condenser
C_4	313	5 mfd. 25 W.V. Electrolytic Condenser
C_5	313	14 mfd. 150 W.V. Electrolytic Condenser
C_6	313	8 mfd. 150 W.V. Electrolytic Condenser
C_{V_1}, C_{V_2}	610	Two Gang Variable Condenser
L	1806	280 Ohm Line Cord
M	900	5 BC Magnetic Speaker
P	2902	Mazda 46 Pilot Light
R_1, R_2	2010	10,000 Ohm Volume Control With 275 Ohm Minimum
R_3	111	25,000 Ohm ½ Watt Carbon Resistor
R_4	119	1 Megohm ½ Watt Carbon Resistor
R_5	117	½ Megohm ½ Watt Carbon Resistor
R_7	132	500 Ohm 1 Watt Wire Wound Resistor
R_8	134	2,000 Ohm ½ Watt Carbon Resistor
S_1	1909	2 Pole 2 Position Selector Switch
R_9	135	420 Ohms 1 Watt Wire Wound Resistor
T_1	1208	BC And Longwave Ant. Coil
T_2	1307	BC And Longwave R.F. Coil

MODEL M ALL-WAVE RECEIVER

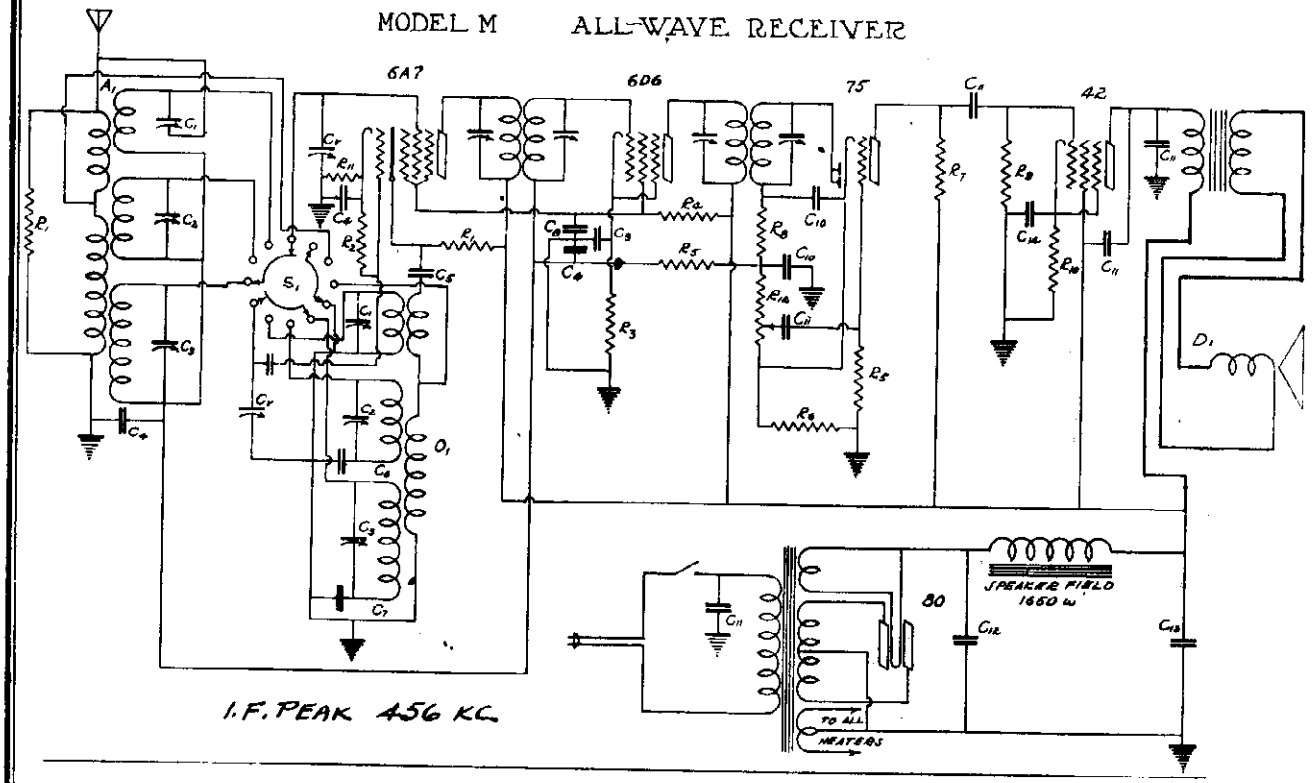

I.F. PEAK 456 KC.

LEGEND	PART №	DESCRIPTION
R_1	1072	10,000 Ω ½ WATT RESISTOR
R_2	1071	50,000 Ω " " "
R_3	1068	150 Ω " " "
R_4	1063A	25,000 Ω 1 WATT RESISTOR
R_5	1062	1 MEGOHM ½ WATT RESISTOR
R_6	1069	500 Ω ½ WATT RESISTOR
R_7	1068	250,000 Ω ½ WATT RESISTOR
R_8	063	25,000 Ω " " "
R_9	1061	500,000 Ω " " "
R_{10}	1090	450 Ω 1 WATT RESISTOR

LEGEND	PART №	DESCRIPTION
R_{11}	1067	250 Ω ½ WATT RESISTOR
R_{12}	1057	300,000 Ω VOLUME CONTROL & A.V. SWITCH ATTACHED
C_1		TRIPLE TRIMMER MIN.
C_2	300	CAPACITY EACH SECTION
C_3		5 μμfds. - MAXIMUM 30 μμfds.
C_4	1080	.01 mfd. 200 V. TUBULAR COND.
C_5	093	.001 mfd MICA CONDENSER
C_6	1092	.002 mfd ±3% MICA CONDENSER
C_7	1095	5 PLATE PADDING COND.
C_8	1085	0.1 mfd. 400 V. TUBULAR COND.

LEGEND	PART №	DESCRIPTION
C_9	1008	2 GANG VAR. COND. (.42 μμfd.)
C_{10}	1080	.25 μμfd. MICA CONDENSER
C_{11}	1082	.01 mfd. 400 V. TUBULAR COND.
C_{12}	2016	8 mfd. 500 V. ELECT. COND.
C_{13}		4 mfd. " " "
C_{14}		10 mfd. 35 V. " "
A_1	503	ALL WAVE ANTENNA COIL
O_1	501	ALL-WAVE OSCILLATOR COIL
D_1	1012	6" DYNAMIC SPEAKER
S_1	712	BAND SELECTOR SWITCH

MODELS 10-19 Incl.
Schematic

CLIMAX RADIO & TELEV. CO., INC.

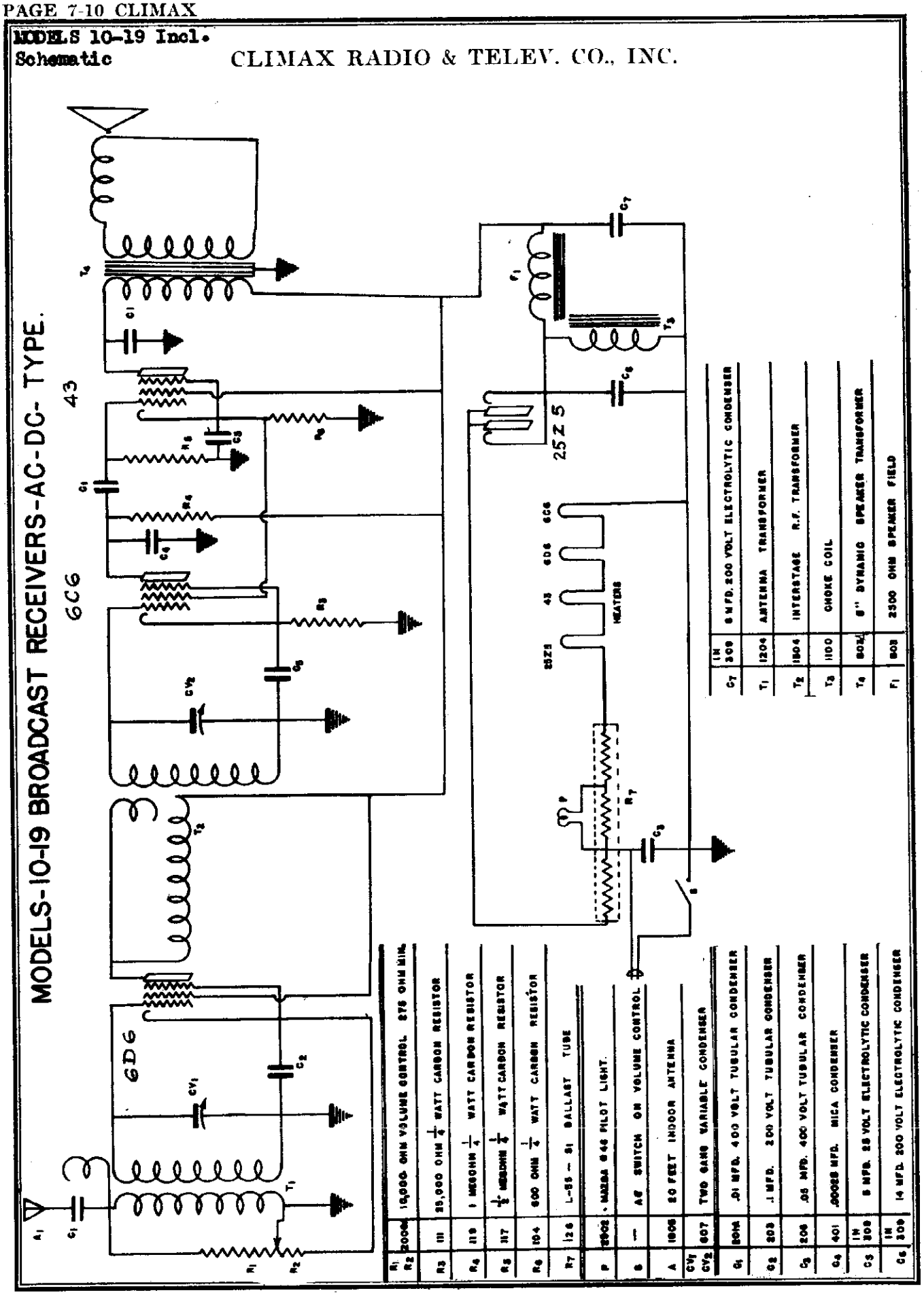

R1 R2	2004	10,000 OHM VOLUME CONTROL. 275 OHM MIN.	
R3	111	25,000 OHM 1/4 WATT CARBON RESISTOR	
R4	119	1 MEGOHM 1/4 WATT CARBON RESISTOR	
R5	117	1/2 MEGOHM 1/2 WATT CARBON RESISTOR	
R6	104	600 OHM 1/4 WATT CARBON RESISTOR	
R7	126	L-55 - 81 BALLAST TUBE	
P	2002	NAERA 646 PILOT LIGHT.	
S	—	AC SWITCH ON VOLUME CONTROL	
A	1005	20 FEET INDOOR ANTENNA	
CV1 CV2	607	TWO GANG VARIABLE CONDENSER	
C1	204	.01 MFD. 400 VOLT TUBULAR CONDENSER	
C2	203	.1 MFD. 200 VOLT TUBULAR CONDENSER	
C3	206	.05 MFD. 400 VOLT TUBULAR CONDENSER	
C4	401	.00025 MFD. MICA CONDENSER	
C5	IN 208	8 MFD. 25 VOLT ELECTROLYTIC CONDENSER	
C6	IN 209	14 MFD. 200 VOLT ELECTROLYTIC CONDENSER	
C7	IN 209	8 MFD. 200 VOLT ELECTROLYTIC CONDENSER	
T1	1204	ANTENNA TRANSFORMER	
T2	1804	INTERSTAGE R.F. TRANSFORMER	
T3	1100	CHOKE COIL	
T4	802	8" DYNAMIC SPEAKER TRANSFORMER	
F1	803	2300 OHM SPEAKER FIELD	

©John F. Rider, Publisher

MODELS 30-34 TWO BAND RECEIVERS *AC-DC* TYPE.

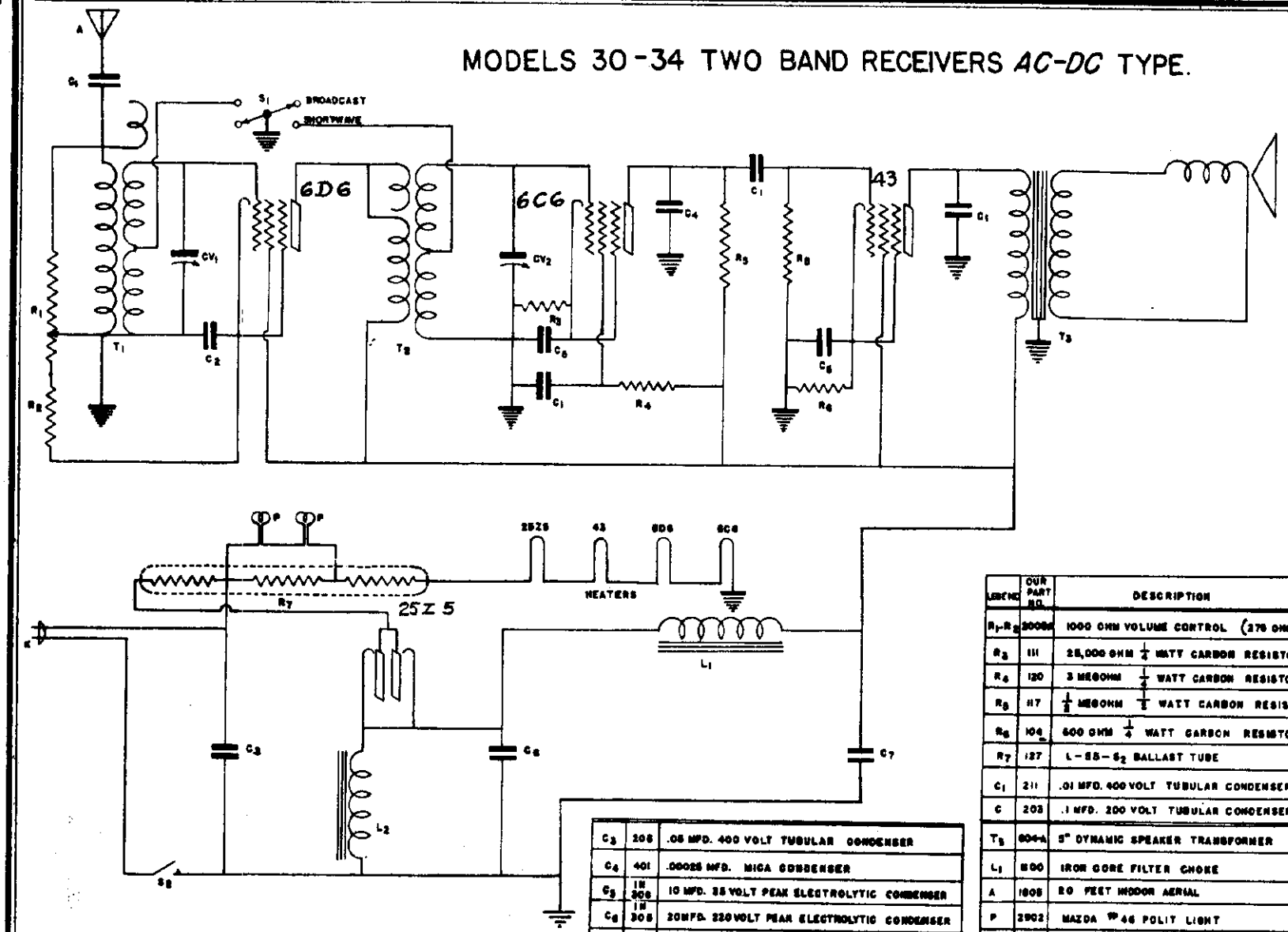

LEGEND	OUR PART NO.	DESCRIPTION
R_1-R_2	2008	1000 OHM VOLUME CONTROL (270 OHM MIN.)
R_3	111	25,000 OHM $\frac{1}{2}$ WATT CARBON RESISTOR
R_4	120	3 MEGOHM $\frac{1}{2}$ WATT CARBON RESISTOR
R_5	117	$\frac{1}{2}$ MEGOHM $\frac{1}{2}$ WATT CARBON RESISTOR
R_6	104	600 OHM $\frac{1}{4}$ WATT CARBON RESISTOR
R_7	127	L-S5-S_2 BALLAST TUBE
C_1	211	.01 MFD. 400 VOLT TUBULAR CONDENSER
C	203	.1 MFD. 200 VOLT TUBULAR CONDENSER
T_3	604-A	5" DYNAMIC SPEAKER TRANSFORMER
L_1	1500	IRON CORE FILTER CHOKE
A	1605	80 FEET INDOOR AERIAL
P	2902	MAZDA #46 POLIT LIGHT
S1	1902	BAND SELECTOR SWITCH
S	—	LINE SWITCH ON VOLUME CONTROL
CV_1 CV_2	601	TWO GANG VARIABLE CONDENSER
K	1900	RUBBER COVERED LINE CORD

C_3	208	.05 MFD. 400 VOLT TUBULAR CONDENSER
C_4	401	.00025 MFD. MICA CONDENSER
C_5	IN 306	10 MFD. 25 VOLT PEAK ELECTROLYTIC CONDENSER
C_6	IN 305	20MFD. 220 VOLT PEAK ELECTROLYTIC CONDENSER
C_7	IN 306	10 MFD. 220 VOLT PEAK ELECTROLYTIC CONDENSER
T_1	1205	TWO BAND ANTENNA TRANSFORMER
T_2	1505	TWO BAND INTERSTAGE TRANSFORMER
L_2	804	SPEAKER FIELD (2500 OHM)

MODEL 35
Schematic

CLIMAX RADIO & TELEV. CO., INC.

MODEL 35 7 TUBE 2 BAND SUPERHETERODYNE RECEIVER *AC-DC* TYPE

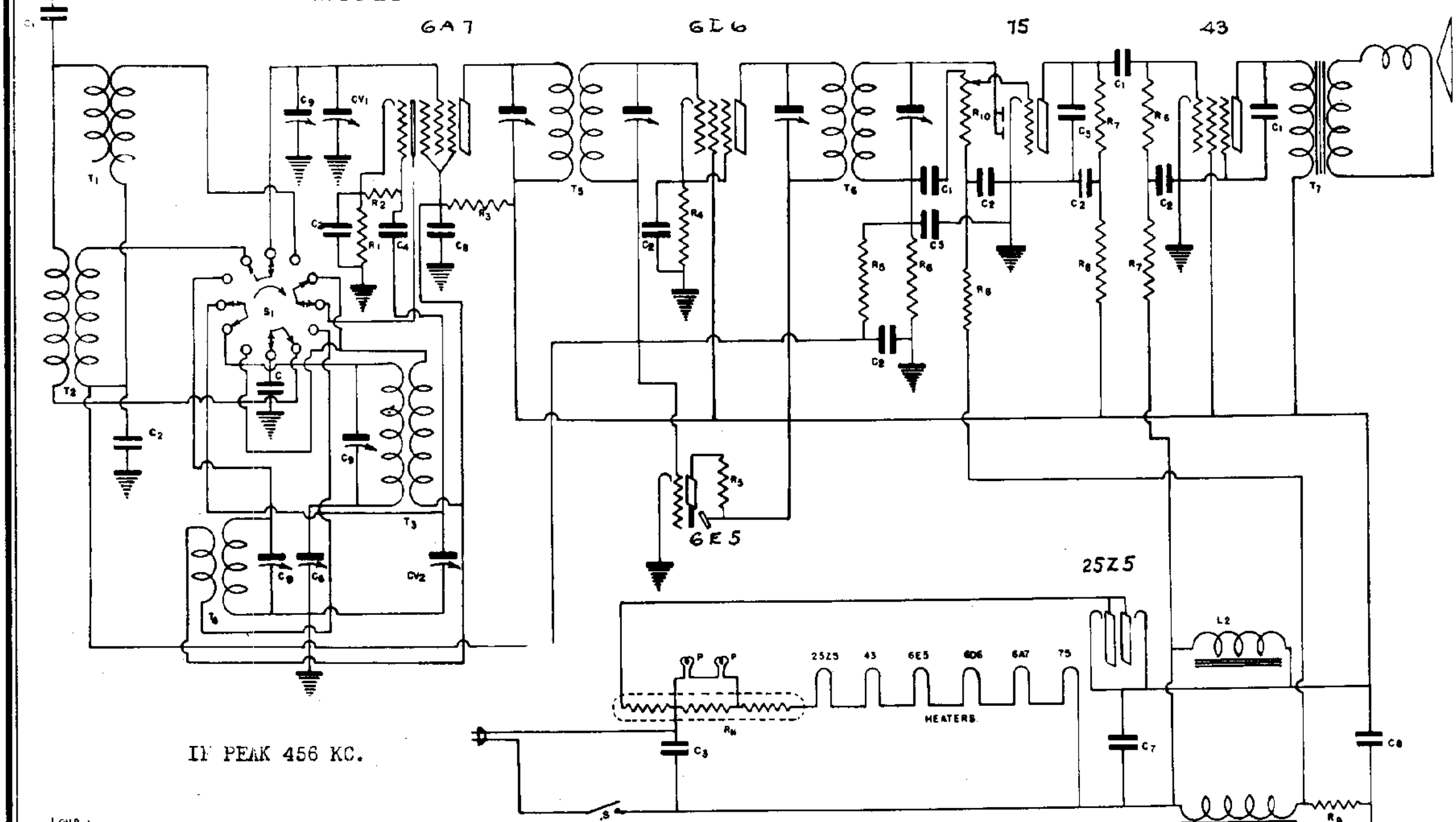

LEGEND	OUR PART NO	DESCRIPTION									
			R_5	119	1 MEGOHM $\frac{1}{4}$ WATT CARBON RESISTOR						
C_7	311	20 MFD. 220 VOLT PEAK ELECTROLYTIC CONDENSER	R_6	117	$\frac{1}{2}$ MEGOHM $\frac{1}{4}$ WATT CARBON RESISTOR.	CV_1 CV_2	609	2 GANG VARIABLE CONDENSER	T_1-T_2 T_3-T_4	1603	SKIP BAND TRANSLATOR UNIT
C_8	312	10 MFD. 220 VOLT PEAK ELECTROLYTIC CONDENSER	R_7	116	$\frac{1}{4}$ MEGOHM $\frac{1}{4}$ WATT CARBON RESISTOR	C_1	211	.01 MFD. 400 VOLT TUBULAR CONDENSER	T_5	1500	HIGH Q I.F. TRANSFORMER
C_9	IN 1603	30 MMFD. CONDENSER	R_8	115	100,000 OHM $\frac{1}{4}$ WATT CARBON RESISTOR	C_2	203	.1 MFD. 200 VOLT TUBULAR CONDENSER	T_6	1502	DIODE I.F. TRANSFORMER
R_1	103	250 OHM WATT CARBON RESISTOR	R_9	130	30 OHM $\frac{1}{4}$ WATT CARBON RESISTOR	C_3	206	.05 MFD. 400 VOLT TUBULAR CONDENSER	T_7	604A	5" DYNAMIC SPEAKER TRANSFORMER
R_2	113	50,000 OHM $\frac{1}{4}$ WATT CARBON RESISTOR	R_{10}	2009	500,000 OHM VOLUME CONTROL	C_4	400	.0001 MFD. MICA CONDENSER	L_1	1100	IRON CORE FILTER CHOKE
R_4	101	150 OHM $\frac{1}{4}$ WATT CARBON RESISTOR	R_{11}	127	L-55-5? BALLAST TUBE	C_5	401	.00025 MFD MICA CONDENSER	L_2	804	SPEAKER FIELD (2500 OHM)
R_3	108	5000 OHM $\frac{1}{4}$ WATT CARBON RESISTOR	S_1	1906	BAND SELECTOR SWITCH	C_6	IN 1603	480 MMFD CONDENSER	P	2902	MAZDA # 46 PILOT LIGHT

MODELS 50-59 2 BAND SUPERHETERODYNE RECEIVERS *AC-DC* TYPE.

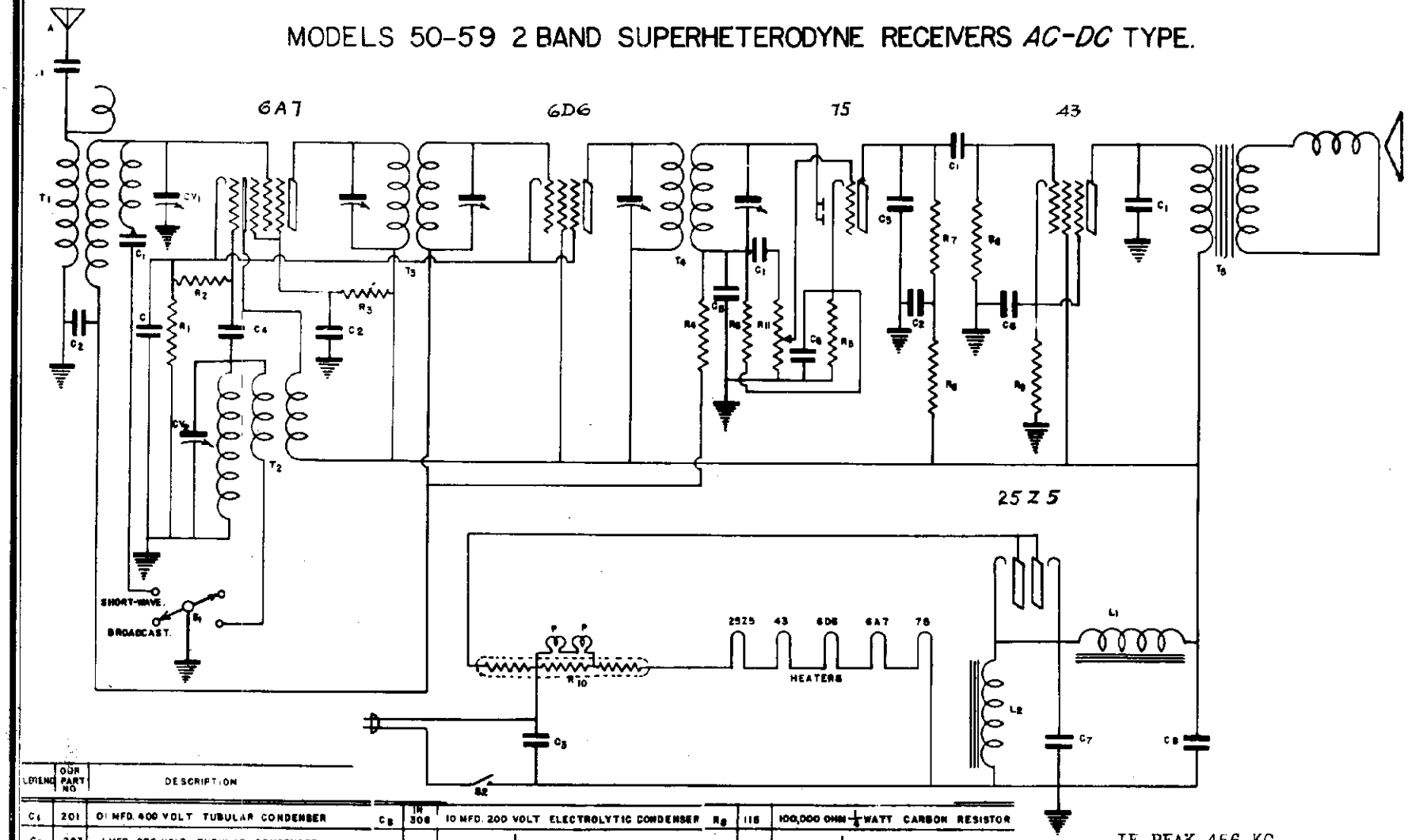

LEGEND	OUR PART NO	DESCRIPTION									
C_1	201	.01 MFD. 400 VOLT TUBULAR CONDENSER	C_8	IN 308	10 MFD. 200 VOLT ELECTROLYTIC CONDENSER	R_8	118	100,000 OHM $\frac{1}{4}$ WATT CARBON RESISTOR			
C_2	203	.1 MFD. 200 VOLT TUBULAR CONDENSER	R_2	113	50,000 OHM $\frac{1}{4}$ WATT CARBON RESISTOR	R_9	104	600 OHM $\frac{1}{4}$ WATT CARBON RESISTOR			
C	204	.25 MFD. 200 VOLT TUBULAR CONDENSER	R_1	103	250 OHM $\frac{1}{4}$ WATT CARBON RESISTOR	R_{10}	127	L-58-S2 BALLAST TUBE			
C_4	400	.0001 MFD. MICA CONDENSER	R_3	108	5,000 OHM $\frac{1}{4}$ WATT CARBON RESISTOR	S_1	1902	BAND SELECTOR SWITCH	T_4	1902	9006 I.F. TRANSFORMER.
C_5	401	.00025 MFD. MICA CONDENSER	R_4	119	1 MEGOHM $\frac{1}{4}$ WATT CARBON RESISTOR	S_2	—	LINE SWITCH ON VOLUME CONTROL	T_5	801-4	5" DYNAMIC SPEAKER TRANSFORMER
C_3	206	.05 MFD. 400 VOLT TUBULAR CONDENSER	R_6	117	$\frac{1}{2}$ MEGOHM $\frac{1}{4}$ WATT CARBON RESISTOR	A	1805	20 FEET INDOOR AERIAL	L_1	801	2500 OHM SPEAKER FIELD
C_6	IN 308	10 MFD 35 VOLT PEAK ELECTROLYTIC CONDENSER	R_{11}	2007	$\frac{1}{2}$ MEGOHM VOLUME CONTROL	T_1-T_2	1800	TRANSLATOR COIL (ONE UNIT)	L_2	1100	IRON CORE FILTER CHOKE
C_7	IN 308	20 MFD 220 VOLT PEAK ELECTROLYTIC CONDENSER	R_7	116	250,000 OHM $\frac{1}{4}$ WATT CARBON RESISTOR	T_3	1500	HIGH Q I.F. TRANSFORMER	P		MAZDA #46 PILOT LIGHT.

IF PEAK 456 KC.

CLIMAX RADIO & TELEV. CO., INC.

MODELS 50-59 1801
Schematic

CLIMAX PAGE 7

MODELS 90-93 Incl.
Schematic

CLIMAX RADIO & TELEV. CO., INC.

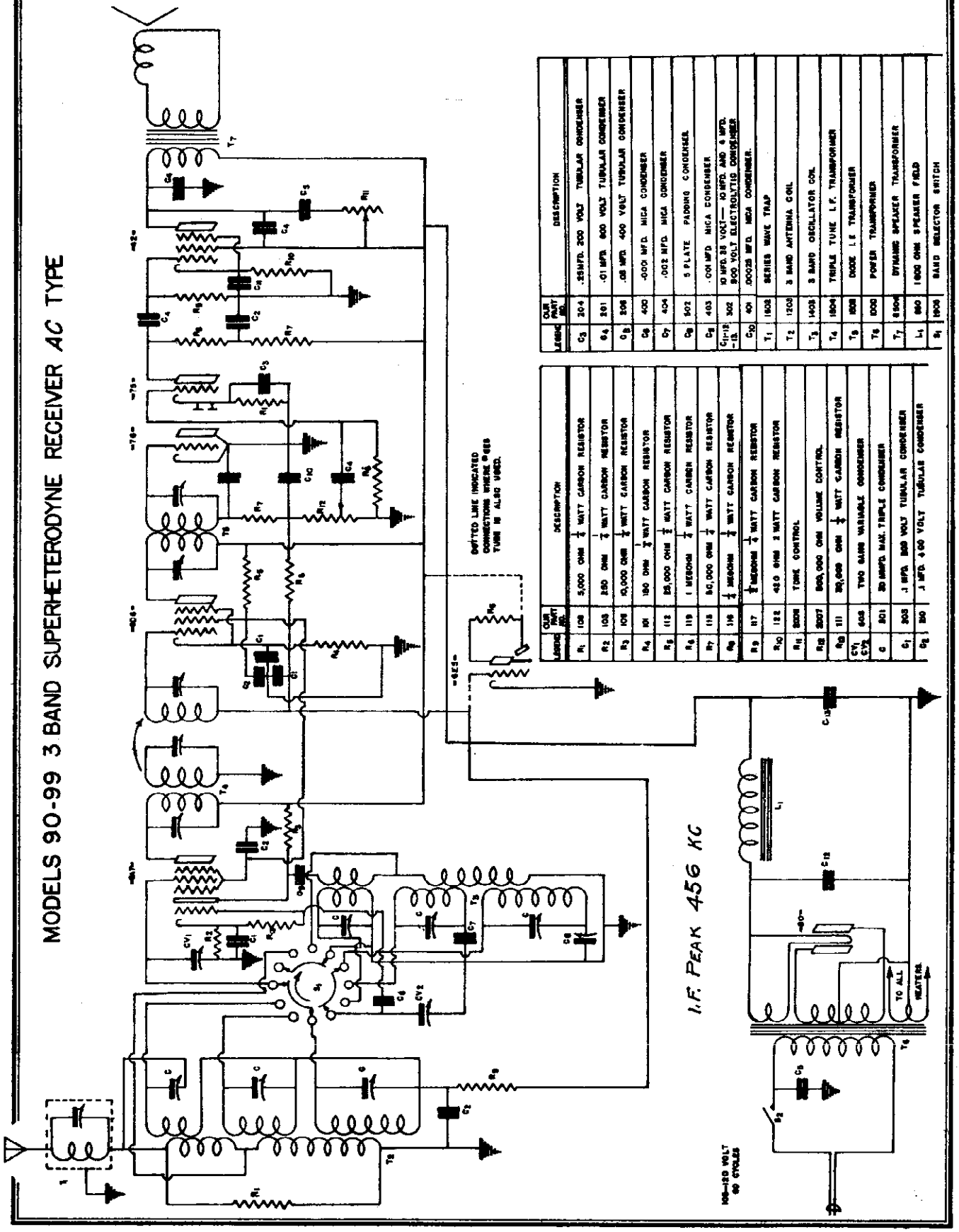

LEGEND	OUR PART NO.	DESCRIPTION
C_3	204	.25MFD. 200 VOLT TUBULAR CONDENSER
C_4	201	.01 MFD. 600 VOLT TUBULAR CONDENSER
C_5	206	.05 MFD. 400 VOLT TUBULAR CONDENSER
C_6	400	.0001 MFD. MICA CONDENSER
C_7	404	.002 MFD. MICA CONDENSER
C_8	502	5 PLATE PADDING CONDENSER
C_9	403	.001 MFD. MICA CONDENSER
C_{11}-12-13	302	10 MFD. 25 VOLT — 10 MFD. AND 4 MFD. 500 VOLT ELECTROLYTIC CONDENSER
C_{10}	401	.00025 MFD. MICA CONDENSER.
T_1	1602	SERIES WAVE TRAP
T_2	1203	3 BAND ANTENNA COIL
T_3	1403	3 BAND OSCILLATOR COIL
T_4	1604	TRIPLE TUNE I.F. TRANSFORMER
T_5	1505	DIODE I.F. TRANSFORMER
T_6	1000	POWER TRANSFORMER
T_7	1504	DYNAMIC SPEAKER TRANSFORMER
L_1	950	1000 OHM SPEAKER FIELD
S_1	1606	BAND SELECTOR SWITCH

LEGEND	OUR PART NO.	DESCRIPTION
R_1	108	5,000 OHM ½ WATT CARBON RESISTOR
R_2	103	250 OHM ½ WATT CARBON RESISTOR
R_3	105	10,000 OHM ½ WATT CARBON RESISTOR
R_4	101	100 OHM ½ WATT CARBON RESISTOR
R_5	112	25,000 OHM ½ WATT CARBON RESISTOR
R_6	119	1 MEGOHM ½ WATT CARBON RESISTOR
R_7	115	50,000 OHM ½ WATT CARBON RESISTOR
R_8	116	½ MEGOHM ½ WATT CARBON RESISTOR
R_9	117	½ MEGOHM ½ WATT CARBON RESISTOR
R_{10}	122	450 OHM 2 WATT CARBON RESISTOR
R_{11}	2026	TONE CONTROL
R_{12}	2027	500,000 OHM VOLUME CONTROL
R_{13}	111	350,000 OHM ½ WATT CARBON RESISTOR
CV1 CV2 CV3	606	TWO GANG VARIABLE CONDENSER
C	201	.25 MMFD. MAX. TRIPLE CONDENSER
C_1	203	.1 MFD. 200 VOLT TUBULAR CONDENSER
C_2	250	.1 MFD. 400 VOLT TUBULAR CONDENSER

©John F. Rider, Publisher

CLIMAX RADIO & TELEV. CO., INC. MODEL 66 Schematics

MODELS 90B-99B 3 BAND ALL WAVE RECEIVER-AC OPERATED

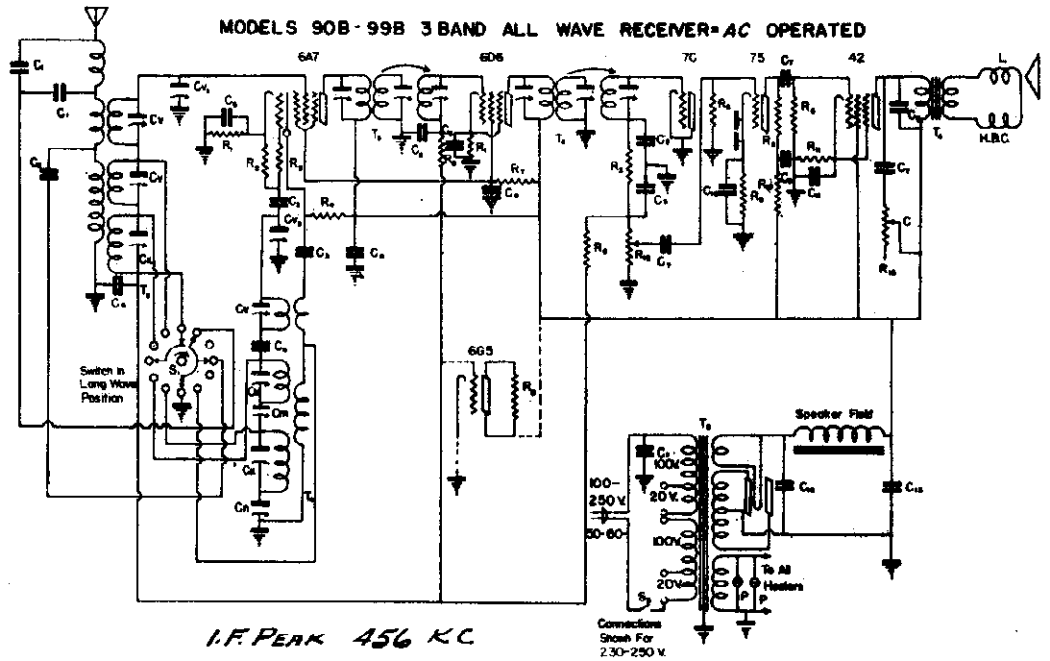

I.F. PEAK 456 KC

	PART NO.	DESCRIPTION
C_1	402	.0005 mfd. Mica Condenser
C_2	400	.0001 mfd. Mica Condenser
C_3	403	.001 mfd. Mica Condenser
C_4	407	.006 mfd. Mica Condenser
C_5	401	.0025 mfd. Mica Condenser
C_6	203	1 mfd. 200 V. Tubular Condenser
C_7	206	.05 mfd. 400 V. Tubular Condenser
C_8	218	.01 mfd. 400 V. Tubular Condenser
C_9	210	1 mfd. 400 V. Tubular Condenser
C_{10}	204	.25 mfd. 200 V. Tubular Condenser
C_{11}	302	10 mfd. 25 W.V. Electrolytic Condenser
C_{12}	302	6 mfd. 350 W.V. Electrolytic Condenser
C_{13}	504	3-30 M.M.F.D. Trimmer Condenser
C_{14}	504	30-60 M.M.F.D. Trimmer Condenser
C_{15}	504	600 M.M.F.D. Trimmer Condenser
C_{16}	504	300 M.M.F.D. Trimmer Condenser
C_{17}	608	.2 Gang Variable Condenser
R_1	136	440 Ohms 1 Watt Carbon Resistor
R_2	131	50 Ohms 1 Watt Carbon Resistor
R_3	139	10,000 Ohms 1 Watt Carbon Resistor
R_4	117	500,000 Ohms 1 Watt Carbon Resistor
R_5	112	25,000 Ohms 1 Watt Carbon Resistor
R_6	135	420 Ohms 1 Watt Wire Wound Resistor
		1,000,000 Ohms Volume Control
		With AC Switch
		1,000 Ohms Tone Control
T_1	607	Low Pass Filter Inductance
T_2	207	Long Wave 3 Band Ant. Coil
T_3	401	Long Wave 3 Band Osc. Coil
T_4	604	Dynamic Speaker Out Put Transformer
T_5	1005	100-250 Volt, 50-60~ Universal Type Power Transformer
L_1	850	6" Dynamic Speaker
P	2902	#46 Pilot Light

MODEL 66 SIX TUBE SUPER-HETERODYNE AUTOMOTIVE RECEIVER

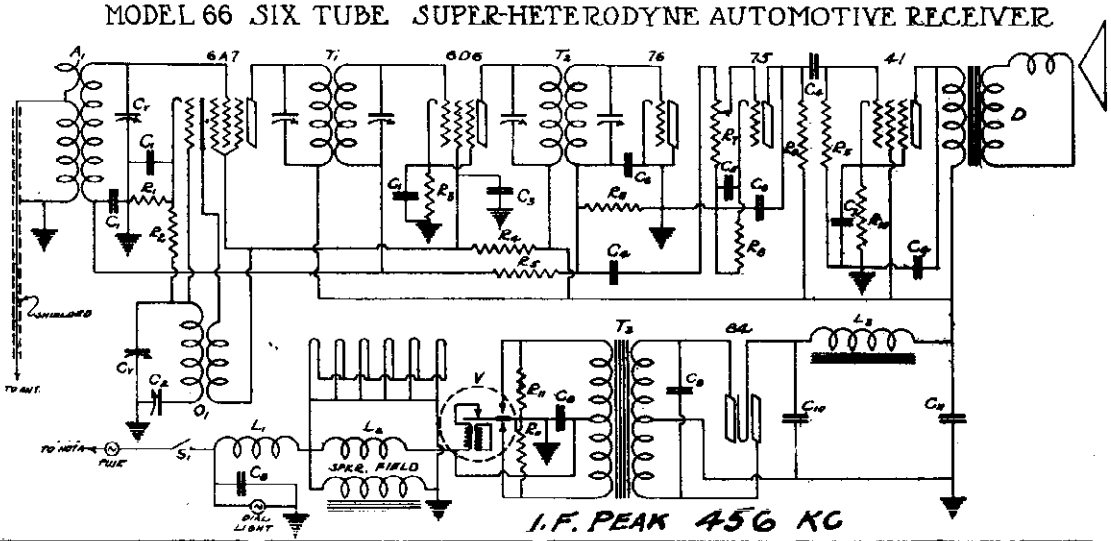

I.F. PEAK 456 KC

LEGEND	PART NO.	DESCRIPTION
C_V	990	Gang Var. Var. Cond.
C_1	1040	1 mfd. 200 V. Tub. Cond.
C_2	1085	.5 mfd. Mica Var. Cond.
C_3	1085	1 mfd. 400 V. Tub. Cond.
C_4	1082	.01 mfd. 400 V. Tub. Cond.
C_5	2051	8 mfd. 350 V. Elect. Cond.
C_6	1090	2.50 mfd. Mica Cond.
C_7	1085	2.5 mfd. 200 V. Tub. Cond.
C_8	1081	.5 mfd. 200 V. Tub. Cond.
C_9	1060	.01 mfd. 1000 V. Tub. Cond.
C_{10}	2051	8 mfd. 350 V. Elect. Cond.
C_{11}	2051	4 mfd. 350 V. Elect. Cond.
R_1	1067	250 M. 1 Watt Resistor
R_2	1071	50,000 M. 1 Watt Resistor
R_3	1055	150 M. 1 Watt Resistor
R_4	1072-A	10,000 M. 1 Watt Resistor
R_5	1062	1 Meg. 1 Watt Resistor
R_6	1081	1 Meg. 1 Watt Resistor
R_7	1068	500,000 M. Vol. Control
R_8	1069	4,500 M. 1 Watt Resistor
R_9	1080	1 Meg. 1 Watt Resistor
R_{10}	1080-A	600 M. 1 Watt Resistor
R_{11}	1081	1 Meg. 1 Watt Resistor
A_1	505	Speaker Antenna Coil
O_1	506	Oscillator Coil
T_2	507	1st I.F. Transformer
T_3	508	2nd I.F. Transformer
T_4	681	Buzzer Transformer
D	1020	Dynamic Speaker
V	801	Push-In Vibrator
L_1	509	R.F. "A" Choke
L_2	510	R.F. "A" Choke
	269	Remote Control Head
	51	Dial Lamp
	107	10 Ampere Fuse

©John F. Rider, Publisher

MODEL 457
MODEL 557
Schematics

CLIMAX RADIO & TELEV. CO., INC.

MODEL 457

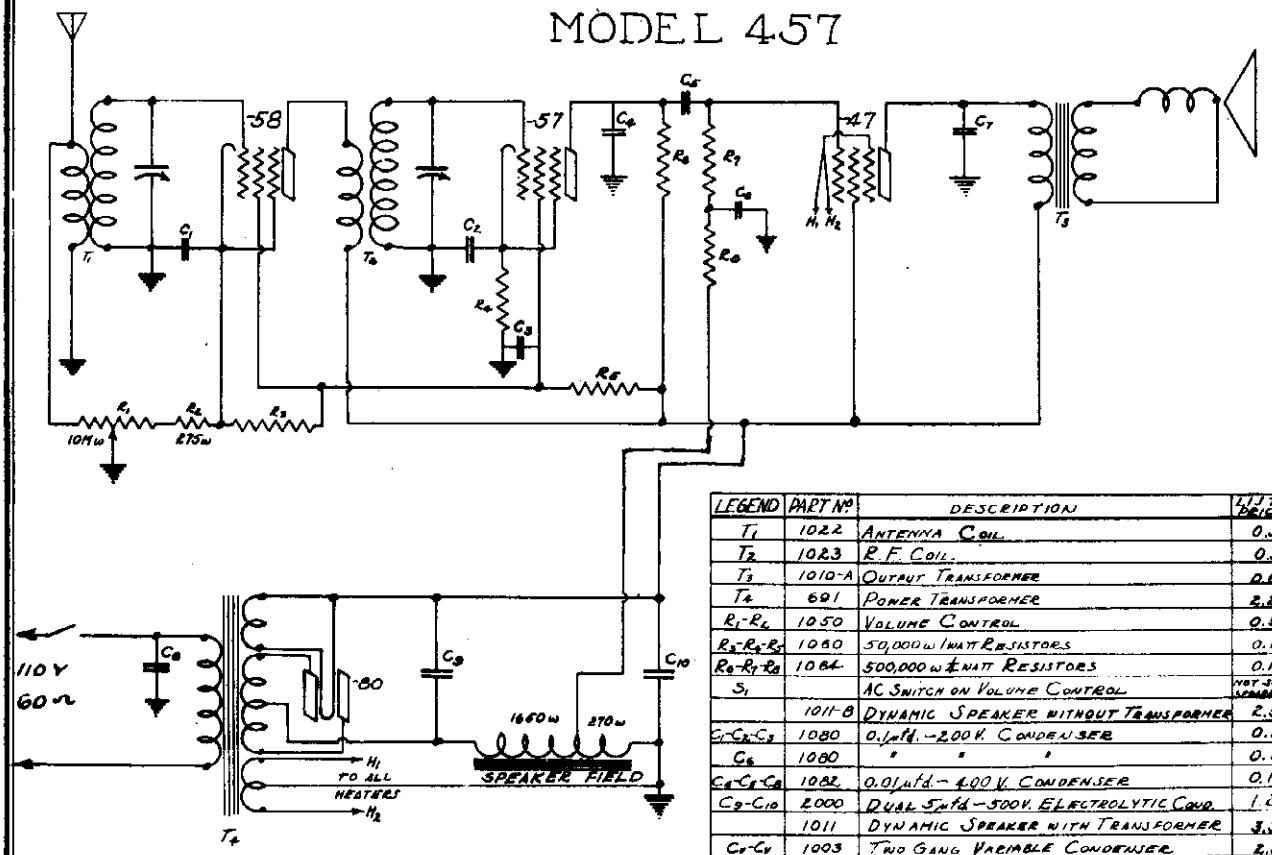

LEGEND	PART Nº	DESCRIPTION	LIST PRICE
T_1	1022	Antenna Coil	0.50
T_2	1023	R.F. Coil	0.50
T_3	1010-A	Output Transformer	0.60
T_4	691	Power Transformer	2.20
R_1-R_4	1050	Volume Control	0.90
R_2-R_5-R_5	1060	50,000 ω 1 Watt Resistors	0.15
R_6-R_7-R_8	1064	500,000 ω ½ Watt Resistors	0.12
S_1		AC Switch on Volume Control	Not Sold Separately
	1011-B	Dynamic Speaker without Transformer	2.50
C_1-C_2-C_3	1080	0.1 mfd. – 200 V. Condenser	0.10
C_4	1080	" " "	0.10
C_5-C_6-C_8	1082	0.01 mfd – 400 V. Condenser	0.10
C_9-C_{10}	2000	Dual 5 mfd – 500 V. Electrolytic Cond.	1.25
	1011	Dynamic Speaker with Transformer	3.30
C_{11}-C_{12}	1003	Two Gang Variable Condenser	2.00

MODEL 557

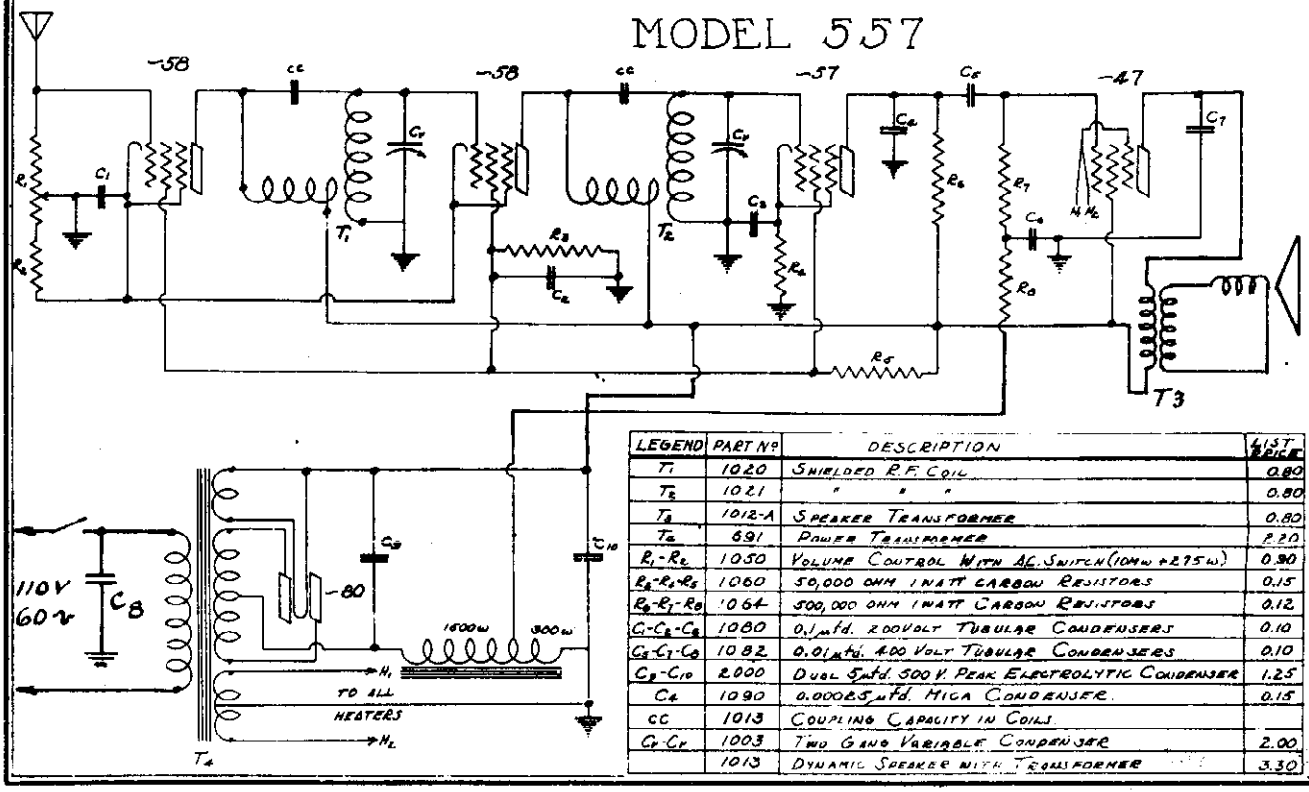

LEGEND	PART Nº	DESCRIPTION	LIST PRICE
T_1	1020	Shielded R.F. Coil	0.80
T_2	1021	" " "	0.80
T_3	1012-A	Speaker Transformer	0.80
T_4	691	Power Transformer	2.20
R_1-R_4	1050	Volume Control With AC Switch (10MΩ + 275Ω)	0.90
R_2-R_5-R_5	1060	50,000 ohm 1 Watt Carbon Resistors	0.15
R_6-R_7-R_8	1064	500,000 ohm 1 Watt Carbon Resistors	0.12
C_1-C_2-C_3	1080	0.1 mfd. 200 Volt Tubular Condensers	0.10
C_5-C_7-C_8	1082	0.01 mfd. 400 Volt Tubular Condensers	0.10
C_9-C_{10}	2000	Dual 5 mfd. 500 V. Peak Electrolytic Condenser	1.25
C_4	1090	0.0005 mfd. Mica Condenser	0.15
CC	1013	Coupling Capacity in Coils	
C_{11}-C_{12}	1003	Two Gang Variable Condenser	2.00
	1013	Dynamic Speaker with Transformer	3.30

©John F. Rider, Publisher

CONTINENTAL RADIO

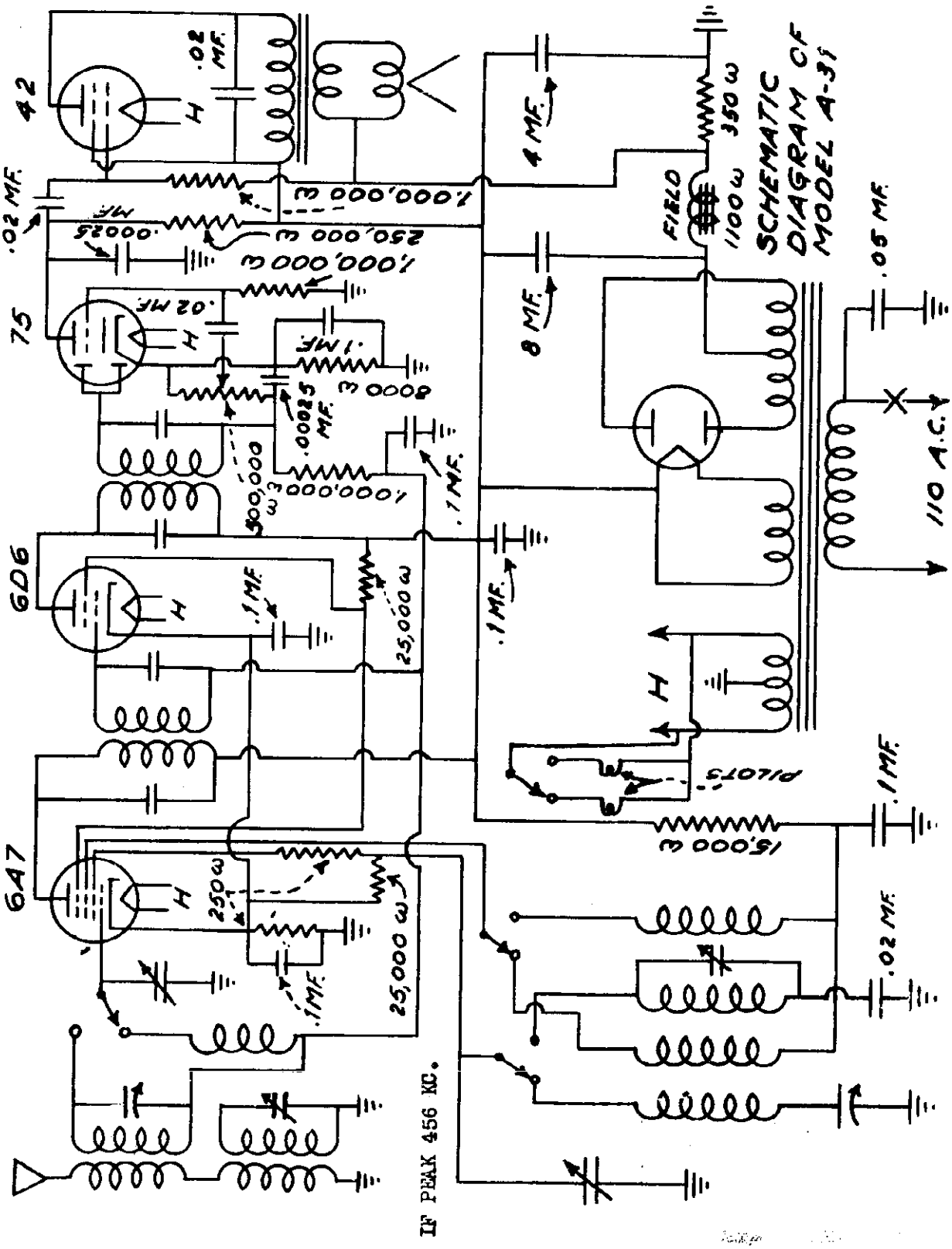

©John F. Rider, Publisher

MODELS X-641, X-741
Schematic, Alignment

CONTINENTAL RADIO & TELEV. CO.

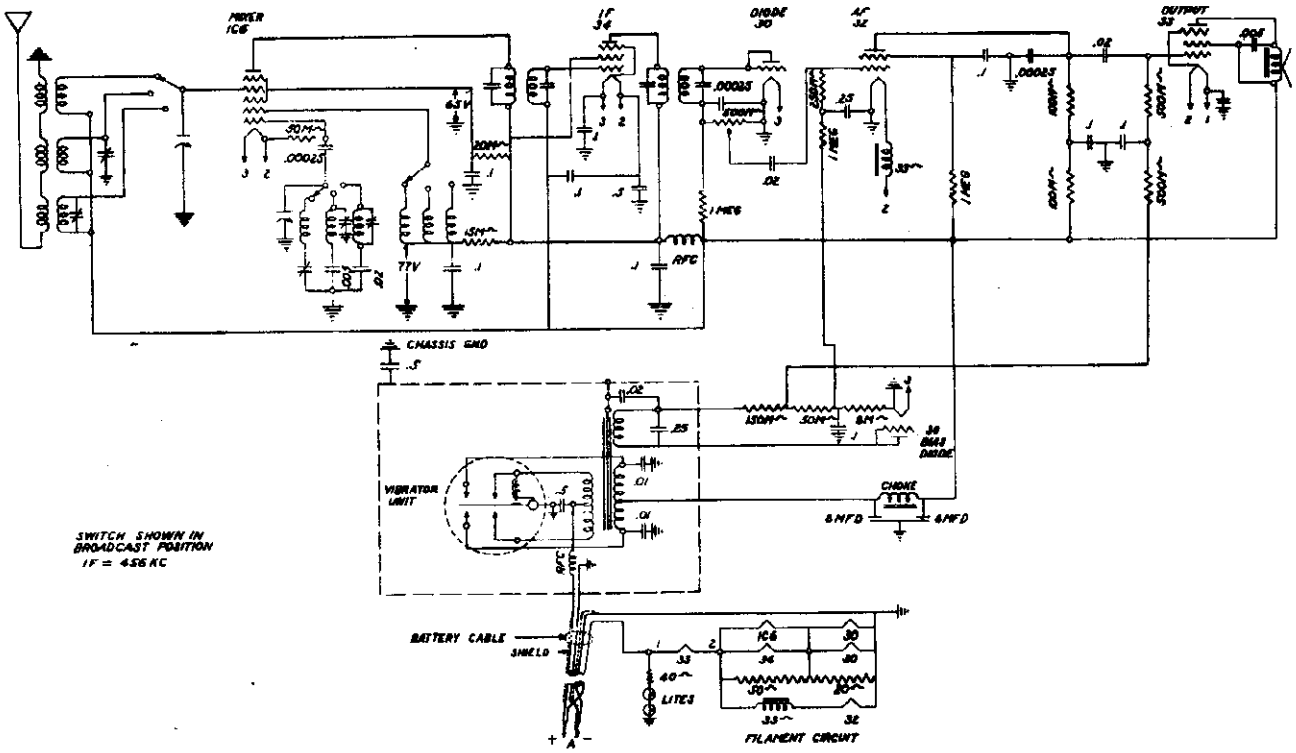

ALIGNMENT DATA

The alignment of this receiver requires the use of a test oscillator that will cover the frequencies of 456, 600, 1400, 3000 and 10,000 K. C. and an output meter to be connected across the speaker terminals.

If possible all alignment should be made with the volume control on maximum and the test oscillator output as low as possible, to prevent the AVC from operating and giving false readings.

I.F. ALIGNMENT Adjust the test oscillator to 1400 K.C. and connect the output to the antenna wire through a .0001 mfd. mica condenser to give the equivalent of an antenna about 60 feet. Set the receiver pointer to 1400 K.C. and adjust the rear gang condenser trimmer to peak. This adjusts the receiver on scale. Then adjust the front or R.F. trimmer to peak.

Next rest the dial pointer on the receiver and test oscillator to 600 K.C. Slowly increase or decrease the oscillator padding condenser, and at the same time continuously tuning back and forth across the signal with the receiver until the maximum reading is obtained on the output meter. This adjustment seems a little complicated but is the easiest way to adjust the oscillator to the R.F. section. The padding condenser is located on the left hand end of the chassis.

Return to 1400 K.C. and again go over the adjustment at that frequency to be sure they have not been thrown out of adjustment.

SHORT WAVE BANDS

The foreign band of 19 to 49 meters can be adjusted by the two trimmers on the short wave coil located next to the gang condenser. Set the test oscillator to 10 megacycles or 31 meters.

The police and aviation band can be adjusted from a signal set at 3,000 K.C. or 300 on the dial. The oscillator trimmer is located underneath the chassis and the R.F. trimmer is between the 6A7 tube and the wave change switch.

The gang condenser trimmers are not to be used for alignment of either of the short wave bands.

©John F. Rider, Publisher

CONTINENTAL RADIO

MODEL L-6
Schematic, Voltage
Socket, Trimmers

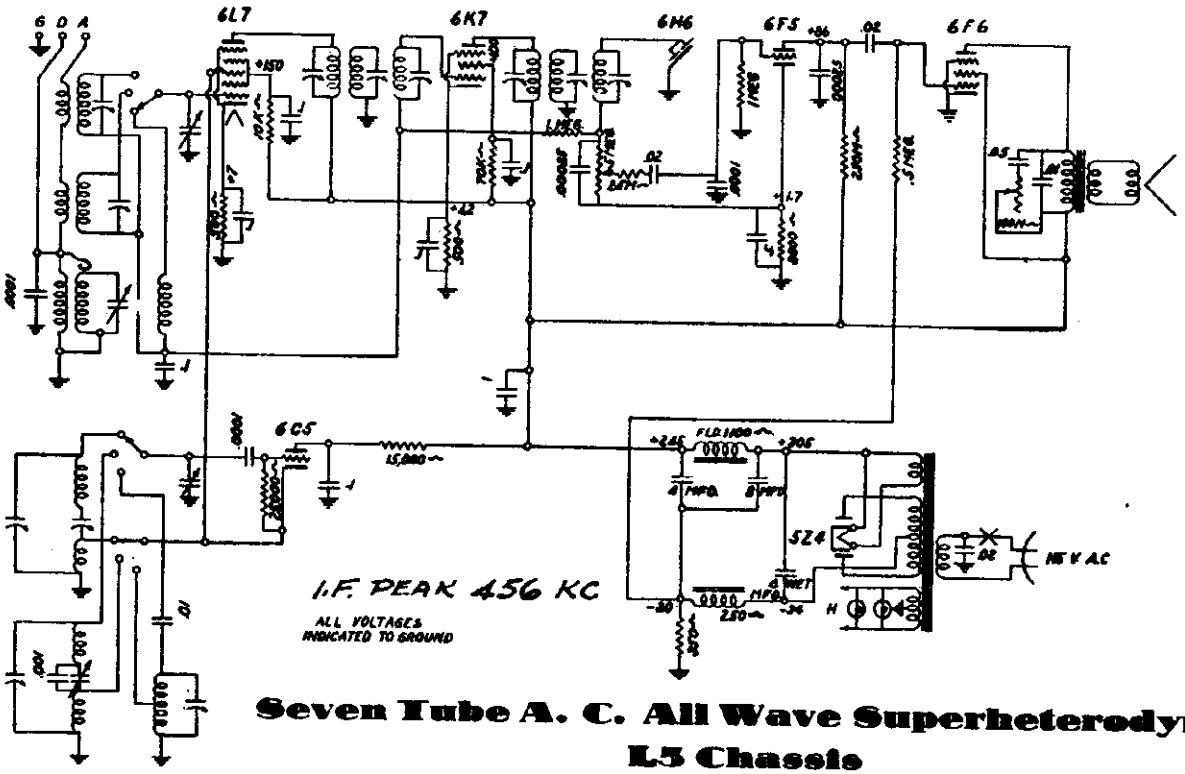

Seven Tube A. C. All Wave Superheterodyne
L3 Chassis

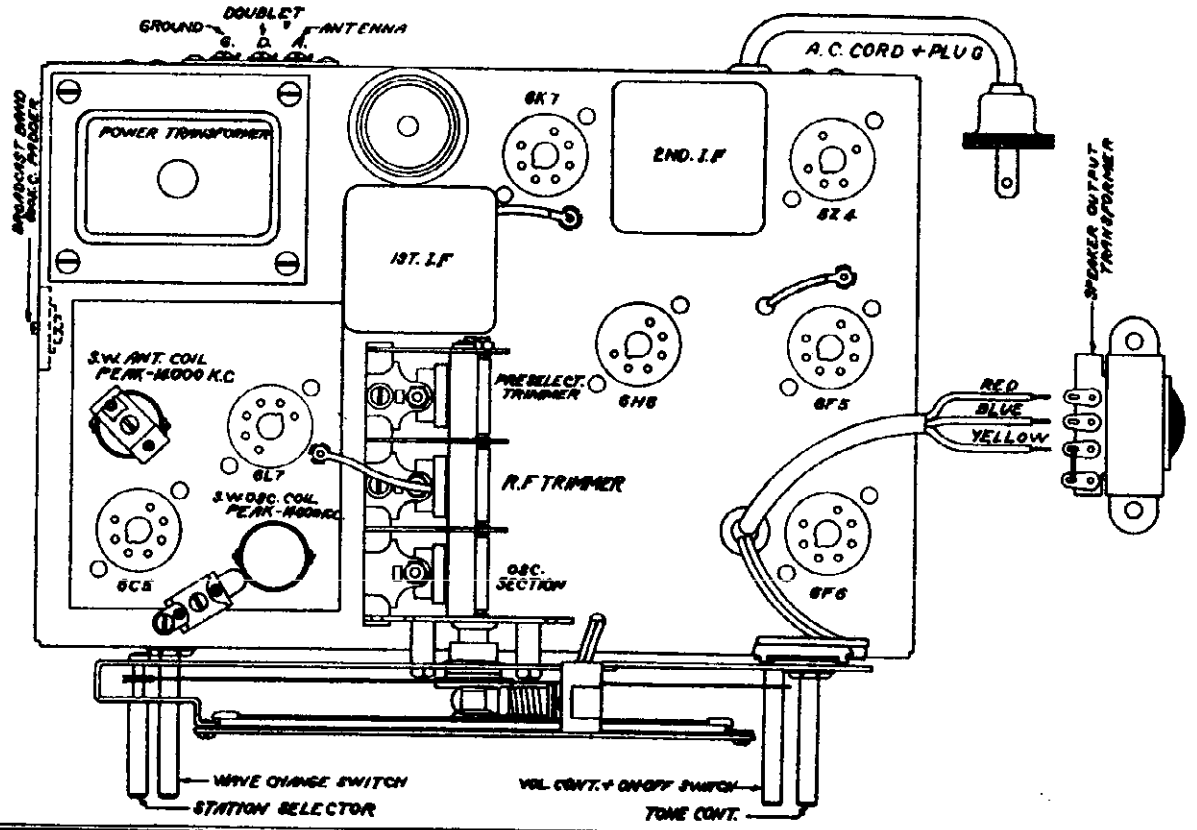

©John F. Rider, Publisher

©John F. Rider, Publisher

Seven Tube A. C. All Wave Superheterodyne

This receiver is designed to operate over three tuning ranges: the broadcast range which extends from 540 to 1700 Kilocycles (KC) (175 to 550 meters), Police and Aviation Band which extends from 1700 to 5000 Kilocycles (KC) (52 to 175 Meters) and the International Short Wave Band which extends from 5800 to 15,200 Kilocycles (KC) (18.5 to 52 meters). This latter range is the one which includes the four internationally assigned bands —the 19, 25, 31 and 49 meter bands.

This receiver is designed to operate from a power supply main of 110-120 volts, 60 cycle alternating current (AC). **Never plug into a DC outlet.**

ALIGNMENT DATA AND SERVICING

GENERAL DATA The alignment of this receiver requires the use of a test oscillator that will cover the frequencies of 456, 600, 1400, 1800, 4000, 6000, and 14,000 KC and an output meter to be connected across the primary or secondary of the output transformers. If possible, all alignment should be made with the volume control on maximum and the test oscillator output as low as possible, to prevent the AVC from operating and giving false readings.

CORRECT ALIGNMENT PROCEDURE The intermediate frequency (I.F.) stage should be aligned properly as the first step. After the I.F. transformers have been properly adjusted and peaked, the Broadcast Band should always be the next procedure; after which, either or both of the Short Wave Bands may be aligned.

I.F. ALIGNMENT Adjust the test oscillator to 456 KC and connect the output to the grid of the first detector tubes (6L7) through a .05 or .1 mfd. condenser. The ground on the test oscillator can be connected to the chassis ground. Align all six I.F. trimmers to peak or maximum reading on the output meter.

BROADCAST BAND ALIGNMENT Adjust the oscillator to 1400 KC and connect the output to the antenna post marked "A" through a .0001 mfd. mica condenser to give the equivalent of an antenna about 60 feet. Set the receiver pointer to 1400 KC and adjust the oscillator trimmer to peak. This trimmer is mounted on the oscillator coil and is located directly under the 6C5 socket. (This adjustment must be made from the bottom of the chassis.) After this has been carefully done, the next step is to adjust the center and rear trimmers of the gang condenser to peak. The center gang section tunes the R.F. or grid coil of the 6L7 tube and the rear condenser section tunes the pre-selector stage circuit.

Next, re-set the dial pointer on the receiver and the test oscillator to 600 KC. Slowly increase or decrease the oscillator padding condenser and at the same time continuously tune back and forth across the signal with the receiver until the maximum reading is obtained on the output meter. This adjustment seems a little complicated but is the easiest way to adjust the oscillator to the pre-selector or R.F. section. The padding condenser is located in the left end of the chassis. Return to 1400 KC and again go over the adjustments of this frequency to be certain that they were not put slightly out of alignment when adjustment was made at 600 KC.

If it is found that in returning to 1400 KC the pointer is accurately on scale, **the only readjustments** that should be made (in this **recheck**) **are the center** and rear trimmers of the gang **condenser. If the pointer** is found off scale, it may be **corrected and put on** scale by **realignment of the oscillator trimmer.** Alignment of the pointer can **only** be **corrected by** adjustment of the oscillator trimmer.

This completes the correct sequence of **operations** in properly aligning the receiver for the Broadcast Band, and **must always be done before** attempting to align the Short Wave Bands.

FOREIGN BAND The Foreign Band of 19 to 49 meters can be adjusted by the two trimmers located on the top of the chassis. The R.F. trimmer is located directly on top of the R.F. or Antenna coil and the oscillator trimmer is mounted on the chassis near the front of the oscillator coil. Set the test oscillator to 14,000 KC. In preparing the test oscillator for alignment of this band, connect a 400 ohm carbon resistor in series with the .0001 mfd. condenser on the output lead of the test oscillator. This resistor is used with the test oscillator only on the Short Wave Bands and should not be used for Broadcast Band alignment. The next operation is to adjust the R.F. and oscillator trimmers for peak at 14,000 KC and as the inherent design of the circuit has been expressly engineered for simplicity in servicing, no other adjustments are necessary for aligning this band.

Note: In order to prevent alignment on the image frequency, it is suggested that alignment be started with the antenna coil trimmer screwed down tightly. To check this adjustment, readjust the pointer to 13100 KC where the image frequency should be found. If properly aligned, the image frequency will be found to be weaker. If, however, the signal at 13100 KC is found to be stronger than the signal at 14000 KC, it signifies that alignment was incorrectly made on the image frequency.

Important: Do not attempt any adjustment of the gang condenser trimmers in aligning the Foreign Band as this will throw the Broadcast Band out of alignment.

POLICE BAND In preparing the test oscillator for alignment of this band, connect a 400 ohm carbon resistor in series with a .0001 mfd. condenser on the output lead of the test oscillator. This resistor is used with the test oscillator only on the Short Wave Bands and should not be used for Broadcast Band alignment.

Set the receiver pointer to 4000 KC (also test oscillator) and adjust the oscillator circuit trimmer to peak.

The oscillator trimmer is mounted on the oscillator coil, which is located underneath the chassis. The oscillator coil is wound with enamel wire and is mounted to the front edge of the chassis. After this has been carefully done, the next step is to adjust the antenna trimmer to peak. The antenna trimmer is attached to the antenna coil; also mounted underneath the chassis and wound with enamel wire. The antenna coil is located nearest the power transformer. Now reset the dial pointer and the test oscillator to 1800 KC in preparation for adjusting the police band padding condenser. This padding condenser is mounted on the underside of the chassis, directly underneath the gang condenser. Slowly increase or decrease the oscillator padding condenser and at the same time continuously tune back and forth across the signal with the receiver until the maximum reading is obtained on the output meter. This adjustment seems a little complicated, but is the easiest way to correctly adjust the oscillator to the R.F. or antenna section.

Return to 4000 KC and again go over the adjustments of this frequency to be certain that they were not put slightly out of alignment when adjustment was made 1800 KC.

If it is found that in returning to 4000 KC the pointer is accurately on scale, the only readjustment that should be made (in this recheck) is the trimmer on the enamel wire antenna coil located underneath the chassis near the power transformer. If the pointer is found off scale, it may be corrected and put on scale by readjustment of the oscillator trimmer. Alignment of the pointer can only be corrected by adjustment of the oscillator trimmer.

Important: There are only three trimmer adjustments necessary for the Police Band. Do not attempt any adjustment of the gang condenser trimmers in aligning the Police Band; otherwise, the Broadcast Band will be thrown out of alignment.

SERVICE DATA FOR ALL BANDS

If it is suspected that the oscillator has stopped but is doubtful due to the presence of the usual amount of noise level, it is suggested that the oscillator plate voltage be checked. An approximate normal minimum oscillating voltage for the plate of the 6C5 (oscillator tube) at 115 volt line potential is as follows:

Broadcast Band	600 KC	124 Volts
	1400 KC	106 Volts
Foreign Band	6000 KC	137 Volts
	14000 KC	140 Volts
Police Band	1700 KC	128 Volts
	4000 KC	110 Volts

Another way of ascertaining whether the tube is oscillating is to ground the grid of the 6C5. If oscillating properly, grounding the grid will cause an appreciable drop in oscillator voltage.

Provisions have been made in this receiver for all types of antennas.

REGULAR ANTENNA Use a standard outside antenna of at least 50 feet including lead-in. Connect to antenna post marked **"A."**

In remote locations that are far away from powerful broadcasting stations, a longer antenna may be used for increased receiving range. Antennas as long as 150 to 200 feet may be employed in "dead spots." (Longer antennas increase sensitivity and decrease selectivity slightly.)

L5

PARTS LIST

Part No.	Description
G730	Police Band Antenna Coil
G731	Police Band Oscillator Coil
P178	A.C. Cord & Plug
P170	350 Ohm Resistor
P279	500 Ohm ½ Watt Resistor
P188	8,000 Ohm ½ Watt Resistor
P673	10,000 Ohm ½ Watt Resistor
P258	15,000 Ohm ½ Watt Resistor
P188	25,000 Ohm ½ Watt Resistor
P675	75,000 Ohm ½ Watt Resistor
P139	250,000 Ohm ½ Watt Resistor
P137	500,000 Ohm ½ Watt Resistor
P182	1 Megohm, ½ Watt Resistor
P480	.0001 Mica Condenser
P147	.00025 Mica Condenser
P395	.01 Mfd. 400 Volt Condenser
P180	Elect. Condenser
P670	3 Gang Condenser
P617	Padding Condenser
P678	Pre Selector Coil
P657	1st I.F. Transformer
P658	2nd I.F. Transformer
P656	Oscillator Coil
P680	Power Transformer
P182	Output Transformer
P485	Choke
P659	Wave Change Switch
P660	Volume Control & "On-Off" Switch
P661	Tone Control
G728	Short Wave Antenna Coil
G729	Short Wave Oscillator Coil
P143	.02 Mfd. 400 Volt Condenser
P148	.05 Mfd. 200 Volt Condenser
P334	.05 Mfd. 400 Volt Condenser
P142	.1 Mfd. 200 Volt Condenser
P276	.1 Mfd. 400 Volt Condenser
P474	4 Mfd. 430 Volt Condenser
P672	.001 Mica Condenser
P478	.0012 Mfd. 200 Volt Condenser
P304	5 Mfd. Elect. Condenser
P723	12" Speaker Field Coil
P683	12" Speaker Cone & Voice Coil Assembly 12" Dynamic Speaker
P688	Dial Glass
P648	Dial & Scale—Complete
P634	Knob
P124	Pilot Light

CONTINENTAL RADIO

MODEL L-6
Schematic, Voltage
Socket, Trimmers

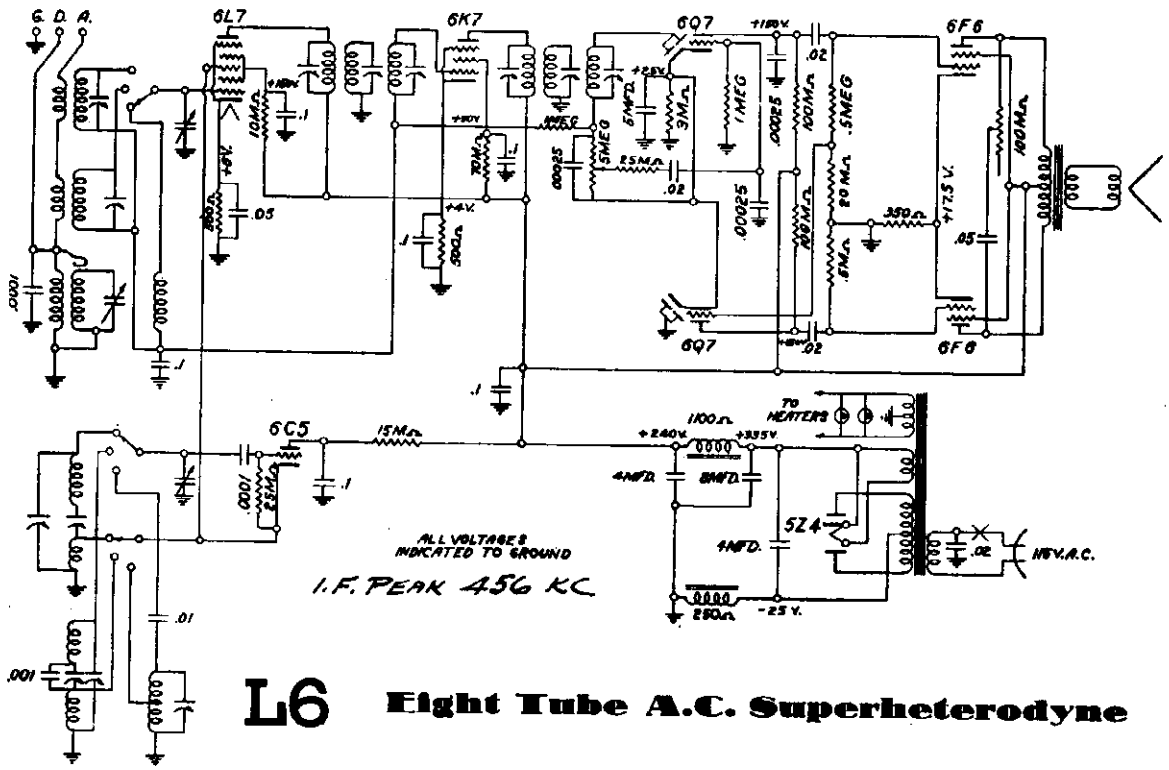

L6 Eight Tube A.C. Superheterodyne

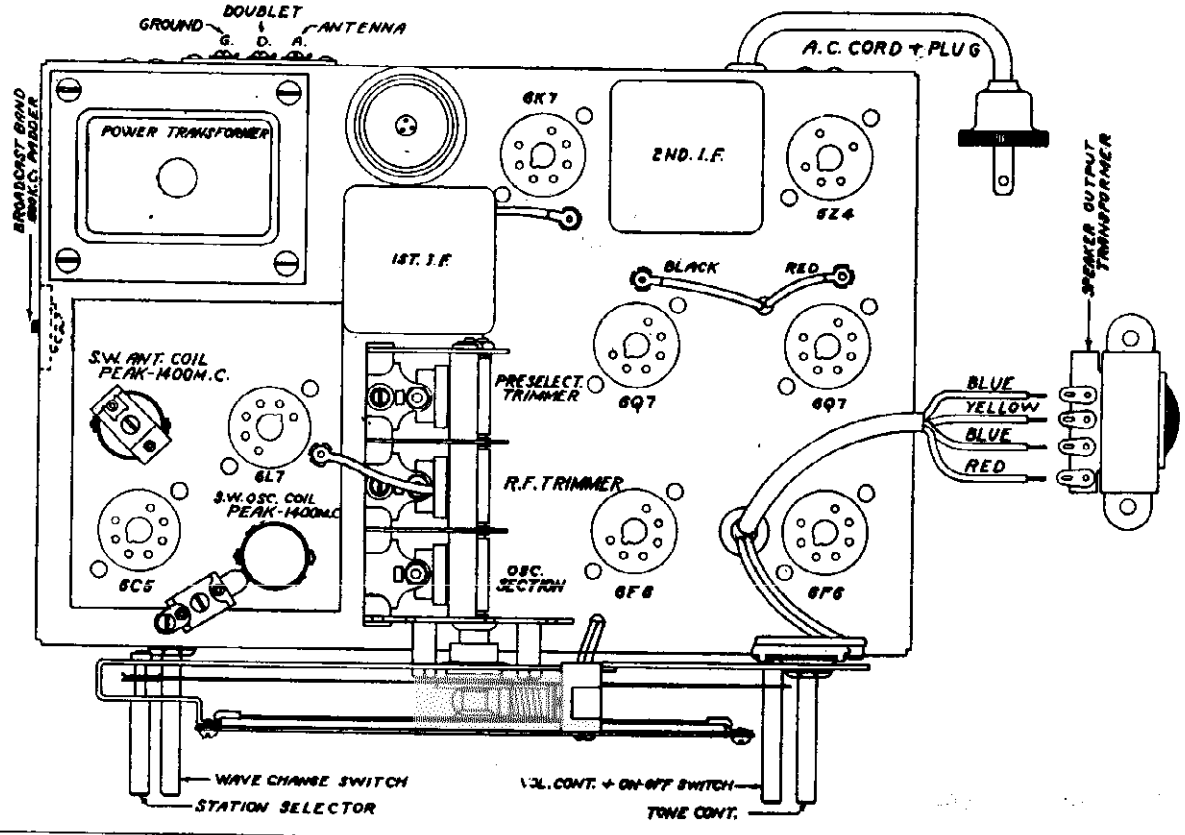

©John F. Rider, Publisher

L6

Eight Tube A.C. All Wave Superheterodyne

This receiver is designed to operate over three tuning ranges. The broadcast range which extends from 540 to 1700 Kilocycles (KC) (175 to 550 meters), Police and Aviation Band which extends from 1700 to 5000 Kilocycles (KC) (52 to 175 Meters) and the International Short Wave Band which extends from 5800 to 15,200 Kilocycles (KC) (18.5 to 52 meters). This short wave range is the one which includes the four internationally assigned bands—the 19, 25, 31 and 49 meter bands.

ALIGNMENT DATA AND SERVICING

GENERAL DATA The alignment of this receiver requires the use of a test oscillator that will cover the frequencies of 456, 600, 1400, 1800, 4000, 6000, and 14,000 KC and an output meter to be connected across the primary or secondary of the output transformers. If possible, all alignment should be made with the volume control on maximum and the test oscillator output as low as possible, to prevent the AVC from operating and giving false readings.

CORRECT ALIGNMENT PROCEDURE The intermediate frequency (I.F.) stage should be aligned properly as the first step. After the I.F. transformers have been properly adjusted and peaked, the Broadcast Band should always be the next procedure; after which, either or both of the Short Wave Bands may be aligned.

I.F. ALIGNMENT Adjust the test oscillator to 456 KC and connect the output to the grid of the first detector tubes (6L7) through a .05 or .1 mfd. condenser. The ground on the test oscillator can be connected to the chassis ground. Align all six I.F. trimmers to peak or maximum reading on the output meter.

BROADCAST BAND ALIGNMENT Adjust the oscillator to 1400 KC and connect the output to the antenna post marked "A" through a .0001 mfd. mica condenser to give the equivalent of an antenna about 60 feet. Set the receiver pointer to 1400 KC and adjust the oscillator trimmer to peak. This trimmer is mounted on the oscillator coil and is located directly under the 6C5 socket. (This adjustment must be made from the bottom of the chassis.) After this has been carefully done, the next step is to adjust the center and rear trimmers of the gang condenser to peak. The center gang section tunes the R.F. or grid coil of the 6L7 tube and the rear condenser section tunes the pre-selector stage circuit.

Next, re-set the dial pointer on the receiver and the test oscillator to 600 KC. Slowly increase or decrease the oscillator padding condenser and at the same time continuously tune back and forth across the signal with the receiver until the maximum reading is obtained on the output meter. This adjustment seems a little complicated but is the easiest way to adjust the oscillator to the pre-selector or R.F. section. The padding condenser is located in the left end of the chassis Return to 1400 KC and again go over the adjustments of this frequency to be certain that they were not put slightly out of alignment when adjustment was made at 600 KC.

This receiver is designed to operate from a power supply main of 110-120 volts, 60 cycle alternating current (AC). Never plug into a DC outlet.

If it is found that in returning to 1400 KC the pointer is accurately on scale, the only readjustments that should be made (in this recheck) are the center and rear trimmers of the gang condenser. If the pointer is found off scale, it may be corrected and put on scale by readjustment of the oscillator trimmer. Alignment of the pointer can **only** be corrected by adjustment of the oscillator trimmer.

This completes the correct sequence of operations in properly aligning the receiver for the Broadcast Band, and **must always be done before** attempting to align the Short Wave Bands.

FOREIGN BAND The Foreign Band of 19 to 49 meters can be adjusted by the two trimmers located on the top of the chassis. The R.F. trimmer is located directly on top of the R.F. or Antenna coil and the oscillator trimmer is mounted on the chassis near the front of the oscillator coil. Set the test oscillator to 14,000 KC. In preparing the test oscillator for alignment of this band, connect a 400 ohm carbon resistor in series with the .0001 mfd. condenser on the output lead of the test oscillator. This resistor is used with the test oscillator only on the Short Wave Bands and should not be used for Broadcast Band alignment. The next operation is to adjust the R.F. and oscillator trimmers for peak at 14,000 KC and as the inherent design of the circuit has been expressly engineered for simplicity in servicing, no other adjustments are necessary for aligning this band.

Note: In order to prevent alignment on the image frequency, it is suggested that alignment be started with the antenna coil trimmer screwed down tightly. To check this adjustment, readjust the pointer to 13100 KC where the image frequency should be found. If properly aligned, the image frequency will be found to be weaker. If, however, the signal at 13100 KC is found to be stronger than the signal at 14000 KC, it signifies that alignment was incorrectly made on the image frequency.

Important: Do not attempt any adjustment of the gang condenser trimmers in aligning the Foreign Band as this will throw the Broadcast Band out of alignment.

POLICE BAND In preparing the test oscillator for alignment of this band, connect a 400 ohm carbon resistor in series with a .0001 mfd. condenser on the output lead of the test oscillator. This resistor is used with the test oscillator only on the Short Wave Bands and should not be used for Broadcast Band alignment.

Set the receiver pointer to 4000 KC (also test oscillator) and adjust the oscillator circuit trimmer to peak. The oscillator trimmer is mounted on the oscillator coil, which is located underneath the chassis. The oscillator coil is wound with enamel wire and is mounted to the front edge of the chassis. After this has been carefully done, the next step is to adjust the antenna trimmer to peak. The antenna trimmer is attached to the antenna coil; also mounted underneath the chassis and wound with enamel wire. The antenna coil is located nearest the power transformer. Now reset the dial pointer and the test oscillator to 1800 KC in preparation for adjusting the police band padding condenser. This padding condenser is mounted on the underside of the chassis, directly underneath the gang condenser. Slowly increase or decrease the oscillator padding condenser and at the same time continuously tune back and forth across the signal with the receiver until the maximum reading is obtained on the output meter. This adjustment seems a little complicated, but is the easiest way to correctly adjust the oscillator to the R.F. or antenna section.

Return to 4000 KC and again go over the adjustments of this frequency to be certain that they were not put slightly out of alignment when adjustment was made 1800 KC.

If it is found that in returning to 4000 KC the pointer is accurately on scale, the only readjustment that should be made (in this recheck) is the trimmer on the enamel wire antenna coil located underneath the chassis near the power transformer. If the pointer is found off scale, it may be corrected and put on scale by readjustment of the oscillator trimmer. Alignment of the pointer can only be corrected by adjustment of the oscillator trimmer.

Important: There are only three trimmer adjustments necessary for the Police Band. Do not attempt any adjustment of the gang condenser trimmers in aligning the Police Band; otherwise, the Broadcast Band will be thrown out of alignment.

SERVICE DATA FOR ALL BANDS

If it is suspected that the oscillator has stopped but is doubtful due to the presence of the usual amount of noise level, it is suggested that the oscillator plate voltage be checked. An approximate normal minimum oscillating voltage for the plate of the 6C5 (oscillator tube) at 115 volt line potential is as follows:

Broadcast Band	600 KC	125 Volts
	1400 KC	100 Volts
Foreign Band	6000 KC	135 Volts
	14000 KC	140 Volts
Police Band	1700 KC	135 Volts
	4000 KC	110 Volts

Another way of ascertaining whether the tube is oscillating is to ground the grid of the 6C5. If oscillating properly, grounding the grid will cause an appreciable drop in oscillator voltage.

ANTENNA

Provisions have been made in this receiver for all types of antennas.

REGULAR ANTENNA Use a standard outside antenna of at least 50 feet including lead-in. Connect to antenna post marked **"A."**

In remote locations that are far away from powerful broadcasting stations, a longer antenna may be used for increased receiving range. Antennas as long as 150 to 200 feet may be employed in "dead spots." (Longer antennas increase sensitivity and decrease selectivity slightly.)

PARTS LIST

Part No.	Description
P176	A.C. Cord & Plug
P178	250 Ohm Resistor
P179	500 Ohm ¼ Watt Resistor
P166	25,000 Ohm ¼ Watt Resistor
P673	10,000 Ohm ½ Watt Resistor
P681	3,000 Ohm ¼ Watt Resistor
P258	15,000 Ohm ¼ Watt Resistor
P288	100,000 Ohm ¼ Watt Resistor
P137	500,000 Ohm ¼ Watt Resistor
P674	20,000 Ohm ¼ Watt Resistor
P675	70,000 Ohm ½ Watt Resistor
P192	1 Megohm ½ Watt Resistor
P680	.0001 Mica Condenser
P672	.001 Mica Condenser −10%+10%
P147	.00025 Mica Condenser
P180	Elect. Condenser
P670	3 Gang Condenser
P817	Padding Condenser
P182	Pre-selector Coil
P657	1st I.F. Transformer
P658	2nd I.F. Transformer
P656	Oscillator Coil
P688	Power Transformer
P478	Output Transformer
P685	Choke
P650	Wave Change Switch
G728	Short Wave Antenna Coil
G729	Short Wave Oscillator Coil
G730	Police Band Antenna Coil
G731	Police Band Oscillator Coil
P661	Tone Control
P660	Volume Control & "On-Off" Switch
P149	.02 Mid. 400 Volt Condenser
P148	.05 Mid. 200 Volt Condenser
P671	.01 Mid. 200 Volt Condenser −10%+10%
P334	.05 Mid. 400 Volt Condenser
P142	.1 Mid. 200 Volt Condenser
P279	.1 Mid. 400 Volt Condenser
P474	4 Mid. 450 Volt Condenser
P804	8 Mid. Elect. Condenser
P782	12" Speaker Field Coil
P683	12" Speaker Cone & Voice Coil Assembly 12" Dynamic Speaker
P668	Dial Glass
P640	Dial & Scale—Complete
P654	Knob
P184	Pilot Light

©John F. Rider, Publisher

CONTINENTAL RADIO

MODEL L-7
Schematic, Voltage
Socket, Trimmers

Seven Tube 6 Volt Battery All Wave Superheterodyne

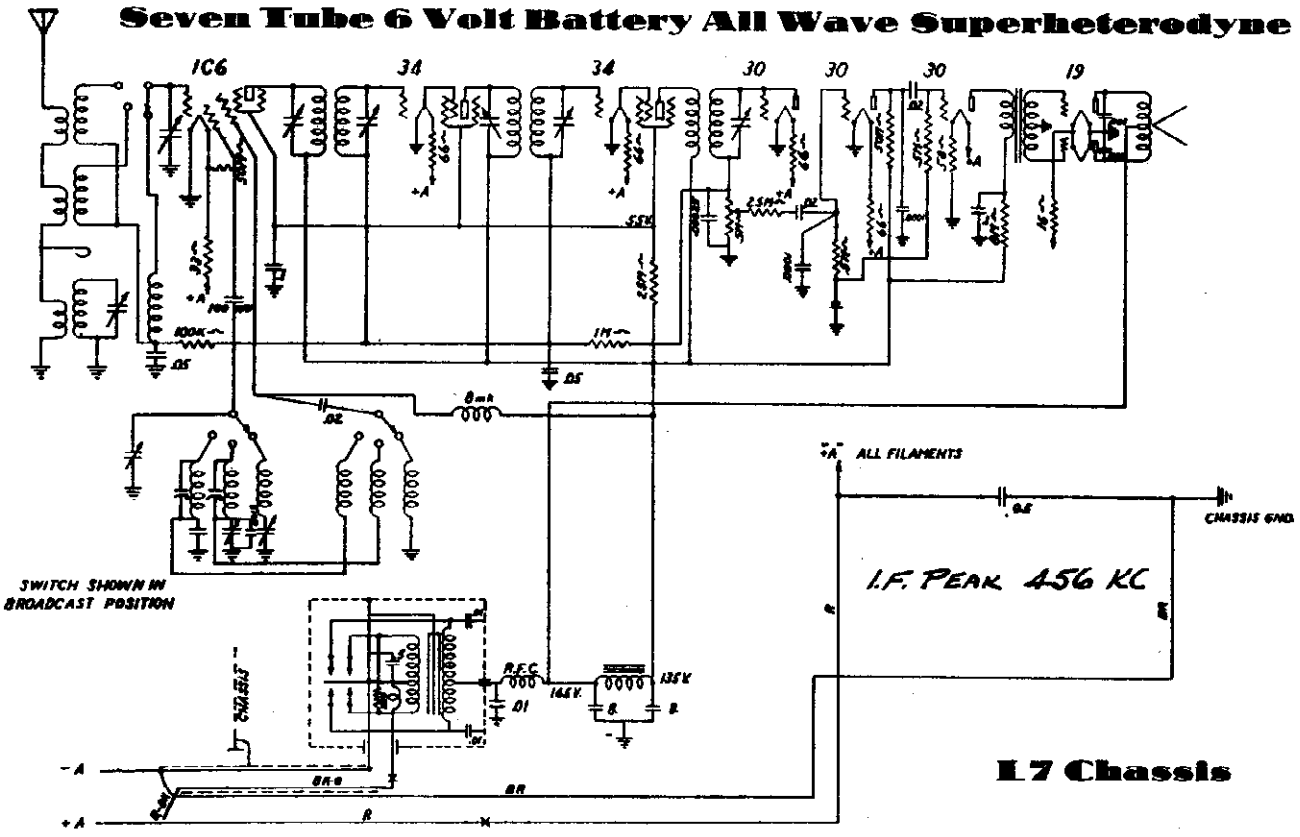

L7 Chassis

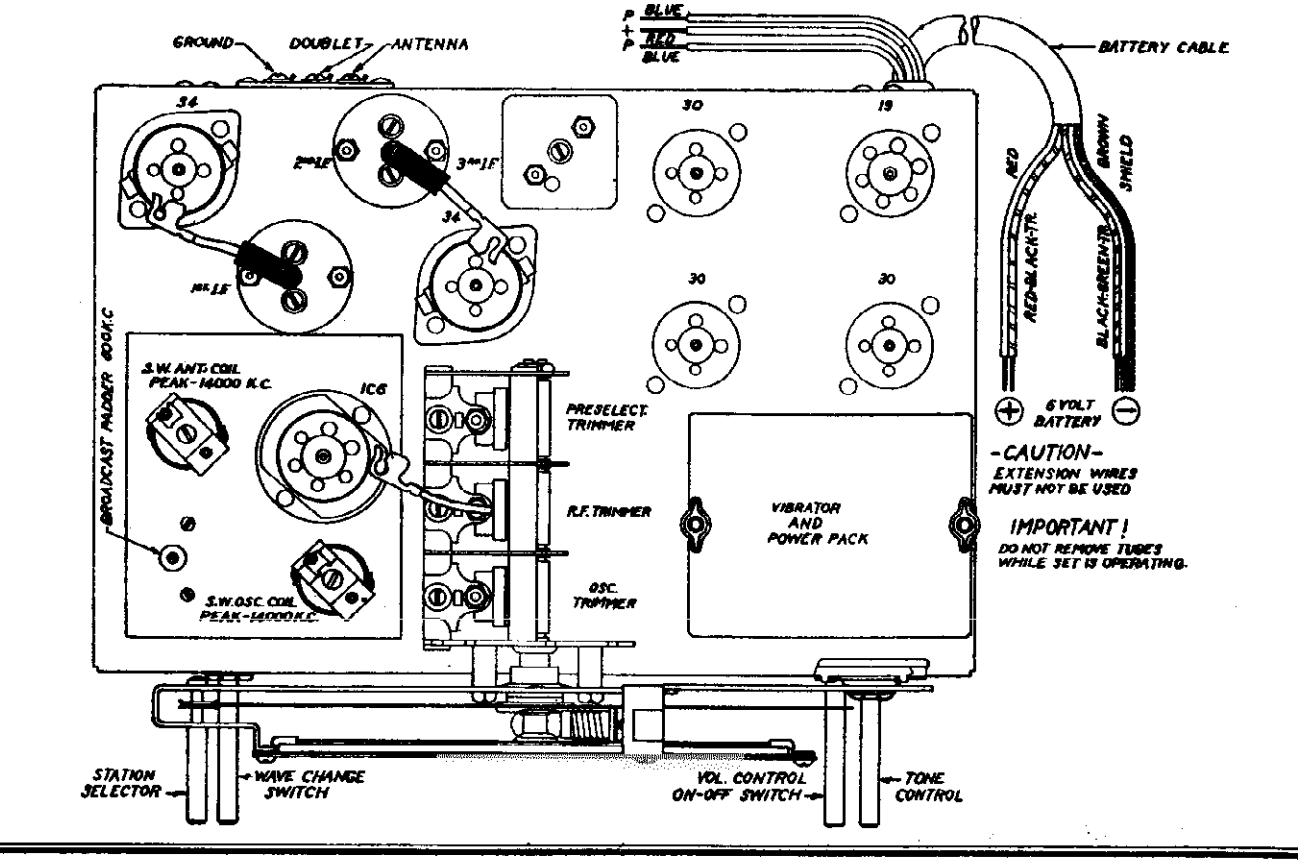

©John F. Rider, Publisher

Seven Tube 6 Volt Battery All Wave Superheterodyne

This receiver is designed to operate over three tuning ranges: the broadcast range which extends from 540 to 1700 Kilocycles (KC) (175 to 550 meters), Police and Aviation Band which extends from 1700 to 5000 Kilocycles (KC) (52 to 175 Meters) and the International Short Wave Band which extends from 5800 to 15,200 Kilocycles (KC) (18.5 to 52 meters). This latter range is the one which includes the four internationally assigned bands—the 19, 25, 31 and 49 meter bands.

ALIGNMENT DATA AND SERVICING

GENERAL DATA The alignment of this receiver requires the use of a test oscillator which will cover the frequencies of 456, 530, 1400, 1800, 4000, 6000, and 14,000 KC and an output meter which is to be connected across the primary or secondary of the output transformer. If possible, all alignments should be made with the volume control on maximum and the test oscillator output as low as possible, to prevent the AVC from operating and giving false readings.

CORRECT ALIGNMENT PROCEDURE The intermediate frequency (I.F.) stages should be aligned properly as the first step. After the I.F. transformers have been properly adjusted and peaked, the Broadcast Band should always be the next procedure, after which, either or both of the Short Wave Bands may be aligned.

I.F. ALIGNMENT Adjust the test oscillator to 456 KC and connect the output to the grid of the first detector tube (1C6) through a .05 or .1 mfd. condenser. The ground on the test oscillator can be connected to the chassis ground. Align all five I.F. trimmers to peak or maximum reading on the output meter. As there are two stages of I.F. in this receiver, there will be consequently three I.F. transformers to align. The I.F. transformer nearest the type (30) diode detector has only one trimmer, (single tuned) and should be the first adjustment. Next adjust the center I.F. transformer, which has two trimmers (double tuned) for maximum output; then adjust the two trimmers on the input I.F. transformer (double tuned) for peak.

BROADCAST BAND ALIGNMENT Adjust the oscillator to 1400 KC and connect the output to the antenna post marked "A" through a .0001 mfd. mica condenser to give the equivalent of an antenna about 60 feet. Set the receiver pointer to 1400 KC and adjust the front gang condenser trimmer (oscillator circuit) to peak. After this has been carefully done, the next step is to adjust the center trimmer of the gang condenser to peak. The center condenser section tunes the RF or grid circuit of the 1C6 tube. Next, re-set the dial pointer on the receiver and the test oscillator to 600 KC. Slowly increase or decrease the oscillator padding condenser and at the same time continuously tune back and forth across the signal with the receiver until the maximum reading is obtained on the output meter. This adjustment may seem a little complicated but is the easiest way to adjust the oscillator to the R.F. section. The padding condenser is located on the left hand side of the chassis, near the extreme front left corner.

Return to 1400 KC and again go over the adjustments of this frequency to be certain that they were not put slightly out of alignment when adjustment was made at 600 KC.

This completes the correct sequence of operations in properly aligning the receiver for the Broadcast Band, and **must always be done before** attempting to align the Short Wave Bands.

FOREIGN BAND ALIGNMENT The Foreign Band of 19 to 49 meters can be adjusted by the two trimmers on the short wave coils located on the top of the chassis. In preparing the test oscillator for alignment of this band, connect a 400 ohm carbon resistor in series with the .0001 mfd. condenser on the output lead of the test oscillator. Set the receiver pointer to 14,000 KC (also test oscillator). The oscillator coil is located alongside the oscillator section of the tuning condenser (front section of gang) and the antenna or R.F. is the other coil remaining on top of the chassis. These two trimmers should be adjusted for peak at 14,000 KC (adjust oscillator trimmer first) and as the inherent design of the circuit has been expressly developed for simplicity in servicing, no other adjustments are necessary for aligning this band.

Note: Always start this procedure by having the oscillator coil trimmer loose (out all the way), and the antenna coil trimmer fairly tight (in all the way); otherwise it is possible to make a false alignment on the image frequency. In order to prevent alignment on the image frequency, it is suggested that the following check be made: Readjust the pointer to 13,100 KC where the image frequency should be found. If properly aligned, the image frequency will be found to be weaker. If, however, the signal at 13,100 KC is found to be stronger than the signal at 14,000 KC, it signifies that alignment was incorrectly made on the image frequency.

IMPORTANT: Do not attempt any adjustment of the gang condenser trimmers in aligning the Foreign Band as this will throw the Broadcast Band out of alignment.

POLICE BAND In preparing the test oscillator for alignment of this band, connect a 400 ohm carbon resistor in series with a .0001 mfd. condenser on the output lead of the test oscillator. This resistor is used with the test oscillator only on the Short Wave Bands and should not be used for Broadcast Band alignment.

Set the receiver pointer to 4000 KC (also test oscillator) and adjust the oscillator circuit trimmer to peak. The oscillator trimmer is mounted on the oscillator coil, which is located underneath the chassis. The oscillator coil is wound with enamel wire and is mounted to the front edge of the chassis. This coil can be identified by the use of a layer of yellow cambric (Empire Cloth) separating the two windings. After this has been carefully done, the next step is to adjust the antenna trimmer to peak. The antenna trimmer is attached to the antenna coil; also mounted underneath the chassis and wound with enamel wire. The antenna coil is mounted at right angles to the oscillator coil and is nearest to the rear of the chassis.

Now reset the dial pointer and the test oscillator to 1800 KC in preparation for adjusting the police band padding condenser. This padding condenser is mounted on the underside of the chassis, directly underneath the gang condenser. Slowly increase or decrease the oscillator padding condenser and at the same time continuously tune back and forth across the signal with the receiver until the maximum reading is obtained on the output meter. This adjustment may seem a little complicated, but is the easiest way to correctly adjust the oscillator to the R.F. or antenna section.

Return to 4000 KC and again go over the adjustments of this frequency to be certain that they were not put slightly out of alignment when adjustment was made 1800 KC.

If it is found that in returning to 4000 KC the pointer is accurately on scale, the only readjustment that should be made (in this re-check) is the trimmer on the enamel wire antenna coil located underneath the chassis near the power transformer. If the pointer is found off scale, it may be corrected and put on scale by readjustment of the oscillator trimmer. Alignment of the pointer can only be corrected by adjustment of the oscillator trimmer.

Important: There are only three trimmer adjustments necessary for the Police Band. Do not attempt any adjustment of the gang condenser trimmers in aligning the Police Band; otherwise, the Broadcast Band will be thrown out of alignment.

SERVICE DATA FOR ALL BANDS

If it is suspected that the oscillator has stopped but is doubtful due to the presence of the usual amount of noise level, it is suggested that the oscillator plate voltage be checked. To ascertain whether the tube is oscillating, ground the oscillator grid of the 1C6 (short stator and rotor plates of oscillator section on gang condenser). If oscillating properly, grounding the grid will cause an appreciable drop in oscillator voltage.

BATTERY SELECTION This receiver is designed to operate entirely from a 6 volt storage battery. It requires no other batteries. It will operate from any storage battery having a capacity ranging from 90 to 175 ampere hours. It is suggested, for the sake of greatest economy, that the largest possible capacity battery be used. The following is a schedule giving the number of hours of service on a single charge from batteries of standard capacities. A fully charged battery will provide satisfactory power for the periods specified before requiring additional charge.

90	Ampere Hour Capacity provides	50 to	53 hours use.
100	Ampere Hour Capacity provides	55 to	60 hours use.
110	Ampere Hour Capacity provides	60 to	65 hours use.
120	Ampere Hour Capacity provides	65 to	70 hours use.
150	Ampere Hour Capacity provides	80 to	88 hours use.
170	Ampere Hour Capacity provides	90 to	100 hours use.

Note: The above tabulation is rated very conservatively and in most cases, with new or correctly rated batteries in good condition, many additional hours of service can be obtained from each charge. If, for any reason, the proper hours of service are not obtained, it will be due to the use of an old battery whose condition and rating are no longer up to standard. If a brand new battery fails to give the required hours of service, it is due to the battery being wrongly rated, or defective.

BATTERY CONNECTIONS At the rear of the receiver there will be found extending from the left end of the chassis, the battery connecting cable. Observation will show that 5 wires are brought out from the braided cable. The **red** and **red with black tracer** wires are joined together and should **both** be securely fastened to the positive (+) terminal of the 6 volt storage battery. The other 3 wires which are **brown, black with green tracer** and **Metallic shield lead** are also joined together and should be securely connected to the negative (—) post of the battery.

WINDCHARGERS

There are many types of windchargers now on the market which may be used to advantage for greater economy of receiver operation. Such chargers will pay for themselves over a period of time, by saving the cost of battery recharging; removing the inconvenience of taking the battery to a charging station; non-operation of the receiver during the charging period.

IMPORTANT NOTE: The battery must never be charged while set is in operation. If a windcharger is used, it should always be disconnected from the battery when the receiver is being used. An inexpensive single pole switch can be used for disconnecting the windcharger from the battery. This will increase the life of the tubes and give additional economy to the use of the receiver. This precaution applies also to gasoline power chargers.

L7

PARTS LIST

Part No.	Description
P391	Electro. Cond. Dual 8 Mfd.
P392	Battery Cord
P422	40 Ohm Candohm Res.
P766	Gang Candohm
P787	16 Ohm Candohm
P411	Filter Choke
P410	Vibrator Transformer
P402	Vibrator Unit
P457	"A" Choke
P395	.5 Mfd. 10 Volt Condenser
P142	.1 Mfd. 200 V. Condenser
P148	.05 Mfd. 200 V. Condenser
P393	.02 Mfd. 200 V. Condenser
P395	.01 Mfd. 600 V. Condenser
P478	.0012 200 Volt Condenser
P672	.001 Mica Condenser
P680	.0001 Mfd. Mica Cond.
P147	.00025 Mica Condenser
P136	250 Ohm ¼ Watt Resistor
P158	8,000 Ohm ¼ Watt Res.
P166	25,000 Ohm ½ Watt Res.
P417	50,000 Ohm ½ Watt Res.
P280	100,000 Ohm ½ Watt Res.
P162	1 Megohm ½ Watt Res.
P688	Bias Cell
P403	6" Speak. (Midget Speak.)
P404	8" Speak. (Cons. Speak.)
P646	Dial and Scale Complete
P688	Escutcheon Plate
P688	Dial Glass
P446	Pilot Lights
P634	Knob
P670	3 Gang Condenser
P158	1st and 2nd I.F. Trans.
P718	Class B Input Transformer
P688	Single Tuned I.F. Trans.
P691	Vol. Con. & "On-Off" Sw.
P682	Tone Control
P659	Wave Change Switch
G550	Short Wave Antenna Coil
G561	Short Wave Osc. Coil
G552	Police Band Antenna Coil
G563	Police Band Osc. Coil
P173	Oscillator Coil
P193	Pre-selector Coil
P768	R.F. Osc. Plate Choke
P789	R.F. Choke
P617	Padding Condenser

©John F. Rider, Publisher

CONTINENTAL RADIO

MODEL M-1
Schematic, Voltage
Socket, Trimmers

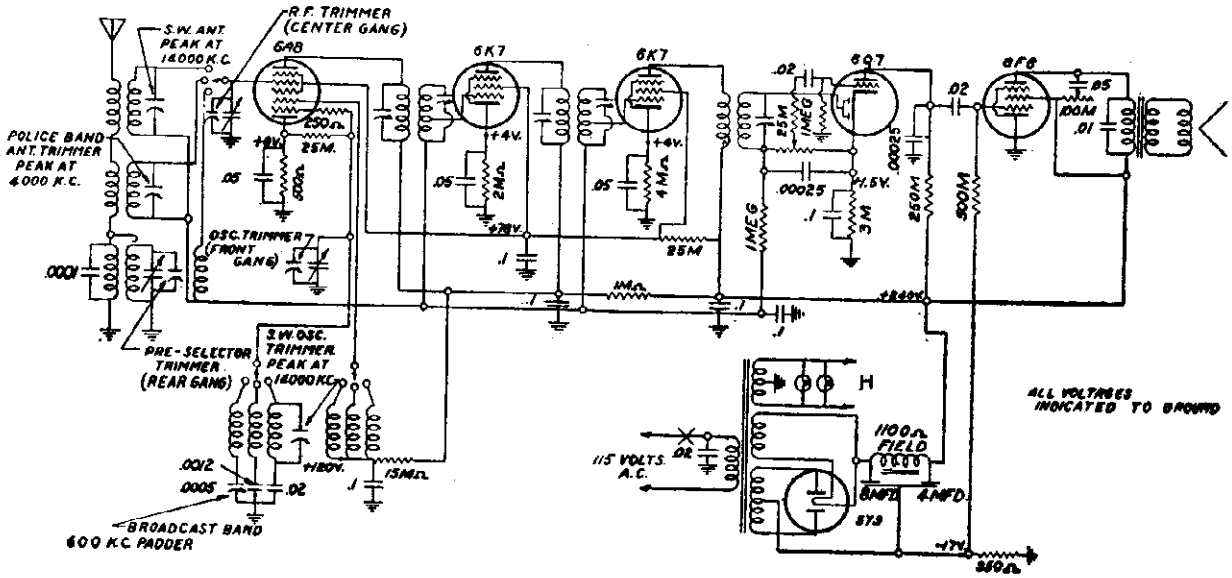

Six Tube A. C. All Wave Superheterodyne
M1 Chassis

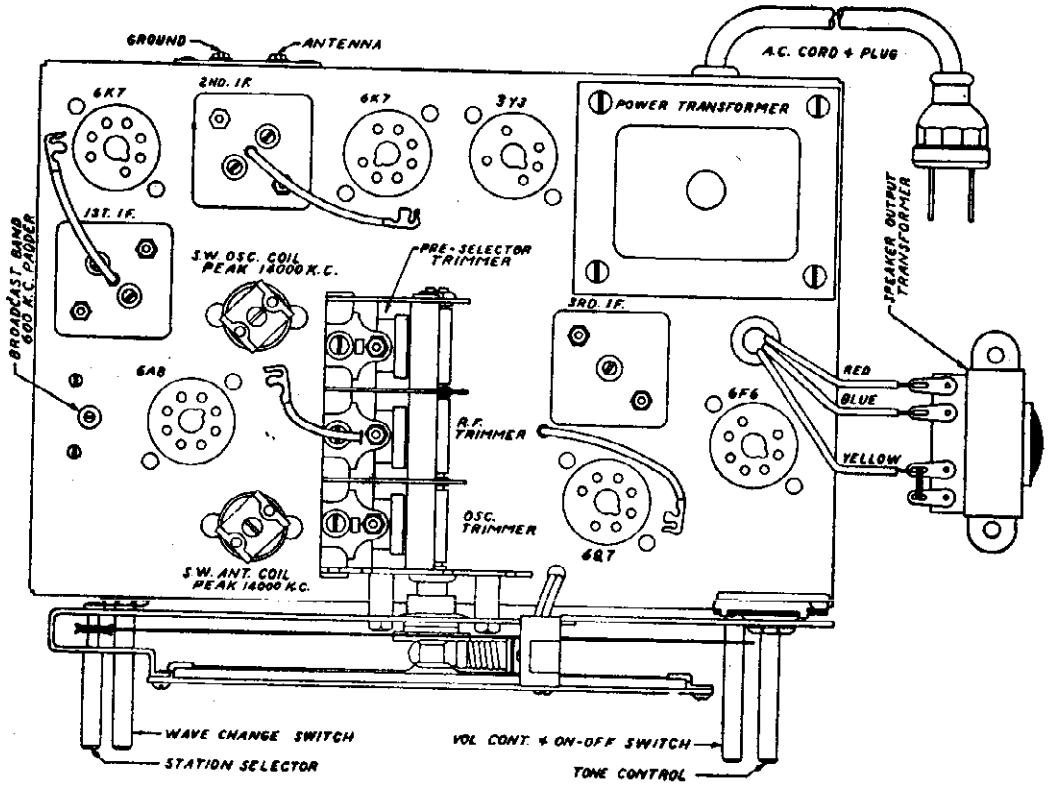

©John F. Rider, Publisher

Six Tube A. C. All Wave Superheterodyne

This receiver is designed to operate over three tuning ranges. The broadcast range which extends from 540 to 1700 Kilocycles (KC) (175 to 550 meters), Police and Aviation Band which extends from 1700 to 5000 Kilocycles (KC) (52 to 175 Meters) and the International Short Wave Band which extends from 5800 to 15,200 Kilocycles (KC) (18.5 to 52 meters). This short wave range is the one which includes the four internationally assigned bands—the 19, 25, 31 and 49 meter bands.

ALIGNMENT DATA AND SERVICING

I.F. ALIGNMENT Adjust the test oscillator to 456 KC and connect the output to the grid of the first detector tubes (6A7) through a .05 or .1 mfd. condenser. The ground on the test oscillator can be connected to the chassis ground. Align all five I.F. trimmers, of the three I.F. transformers, to peak or maximum reading on the output meter.

BROADCAST BAND ALIGNMENT Adjust the oscillator to 1400 KC and connect the output to the antenna post marked "A" through a .0001 mfd. mica condenser to give the equivalent of an antenna about 60 feet. Set the receiver pointer to 1400 KC and adjust the front gang condenser trimmer (oscillator circuit) to peak. After this has been carefully done, the next step is to adjust the center and rear trimmers of the gang condenser to peak. The center gang section tunes the R.F. or grid coil of the 6A8 tube and the front condenser section tunes the pre-selector stage circuit.

Next, re-set the dial pointer on the receiver and the test oscillator to 600 KC. Slowly increase or decrease the oscillator padding condenser and at the same time continuously tune back and forth across the signal with the receiver until the maximum reading is obtained on the output meter. This adjustment seems a little complicated but is the easiest way to adjust the oscillator to the pre-selector or R.F. section. The padding condenser is located on the left hand side of the chassis, directly to the left of the 6A7 tube and in front of the first I.F. transformer.

Return to 1400 KC and again go over the adjustments of this frequency to be certain that they were not put slightly out of alignment when adjustment was made at 600 KC.

This completes the correct sequence of operations in properly aligning the receiver for the Broadcast Band, and **must always be done before** attempting to align the Short Wave Bands.

FOREIGN BAND The Foreign Band of 19 to 49 meters can be adjusted by the two trimmers on the short wave coil located on the top of the chassis. Set the test oscillator to 14,000 KC. The oscillator coil is located near the 1st I.F. Transformer and the antenna or R.F. coil is located directly in front of the Short Wave oscillator coil and about midway between the 1st I.F. Transformer and the 6A7 tube. These two trimmers should be adjusted for peak at 14,000 KC and as the inherent design of the circuit has been expressly designed for simplicity in servicing, no other adjustments are necessary for aligning this band. **Note:** Always start this procedure by having the oscillator coil trimmer loose (out all the way), and the antenna coil trimmer fairly tight (in all the way); otherwise it is possible to make a false alignment on the image frequency.

Important: Do not attempt any adjustment of the gang condenser trimmers in aligning the Foreign Band as this will throw the Broadcast Band out of alignment.

POLICE BAND There is only one adjustment to be made in the alignment of the Police Band. Due to the circuit design and correct matching of the coils, no oscillator adjustment is necessary.

Set the dial pointer to 4000 KC (also the test oscillator) and adjust the antenna coil trimmer to resonance. In preparing the test oscillator for alignment of this band, connect a 400 ohm carbon resistor in series with the .0001 mfd. condenser on the output lead of the test oscillator. This resistor is used with the test oscillator only on the Short Wave Bands and should not be used for Broadcast Band alignment. The two police band coils are under the chassis and the antenna coil trimmer is mounted on the end of the antenna coil.

Important: This is the only adjustment necessary for the Police Band. Do not attempt any adjustment of the gang condenser trimmers in aligning the Police Band, otherwise the Broadcast Band will be thrown out of alignment.

SERVICE DATA FOR ALL BANDS

If it is suspected that the oscillator has stopped but is doubtful due to the presence of the usual amount of noise level, it is suggested that the oscillator plate voltage be checked. To ascertain whether the tube is oscillating, ground the oscillator grid of the 6A8 (short stator and rotor plates of oscillator section on gang condenser). If oscillating properly, grounding the grid will cause an appreciable drop in oscillator voltage.

M1

This receiver is designed to operate from a power supply main of 110-120 volts, 60 cycle alternating current (AC). **Never plug into a DC outlet.**

GENERAL DATA The alignment of this receiver requires the use of a test oscillator that will cover the frequencies of 456, 600, 1400, 1800, 4000, 6000, and 14,000 KC and an output meter to be connected across the primary or secondary of the output transformers. If possible, all alignments should be made with the volume control on maximum and the test oscillator output as low as possible, to prevent the AVC from operating and giving false readings.

CORRECT ALIGNMENT PROCEDURE The intermediate frequency (I.F.) stage should be aligned properly as the first step. After the I.F. transformers have been properly adjusted and peaked, the Broadcast Band should always be the next procedure; after which, either or both of the Short Wave Bands may be aligned.

PARTS LIST

Part No.	Description
P617	Padding Condenser
P634	Knob
P646	Complete Dial & Scale
P660	Volume Control & "On-Off" Switch
P681	Tone Control
P688	Dial Glass
P670	3 Gang Condenser
P674	Wave Change Switch
P686	I.F. Transformer
P758	I.F. Transformer
P160	Electrolytic Condenser
P179	350 Ohm Resistor
P173	Oscillator Coil
P176	AC Cord & Plug
P182	Output Transformer
P193	Pre-Selector Coil
P306	Power Transformer
G560	Short Wave Antenna Coil
G561	Short Wave Oscillator Coil
G562	Police Band Antenna Coil
G563	Police Band Oscillator Coil
P124	Pilot Light
P147	.00025 Mica Condenser
P480	.0001 Mica Condenser
P142	.10 Mfd. 200 Volt Condenser
P143	.02 Mfd. 600 Volt Condenser
P148	.05 Mfd. 200 Volt Condenser
P276	.10 Mfd. 400 Volt Condenser
P334	.05 Mfd. 400 Volt Condenser
P335	.01 Mfd. 200 Volt Condenser
P478	.0012 Mfd. 200 Volt Condenser
P138	250 Ohm ¼ Watt Resistor
P137	500,000 Ohm ¼ Watt Resistor
P139	250,000 Ohm ¼ Watt Resistor
P162	1 Megohm ¼ Watt Resistor
P185	25,000 Ohm 1 Watt Resistor
P186	25,000 Ohm ¼ Watt Resistor
P258	15,000 Ohm ¼ Watt Resistor
P278	1,000 Ohm ¼ Watt Resistor
P279	500 Ohm ¼ Watt Resistor
P481	3,000 Ohm ¼ Watt Resistor
P757	4,000 Ohm ¼ Watt Resistor
P756	2,000 Ohm ¼ Watt Resistor
P435	6" Speaker Cone Only
P439	Speaker Field Coil
G564	Spider & Voice Coil Unit—Complete
	6" Dynamic Speaker

©John F. Rider, Publisher

CONTINENTAL RADIO

MODEL X-8
Schematic, Voltage
Socket, Trimmers

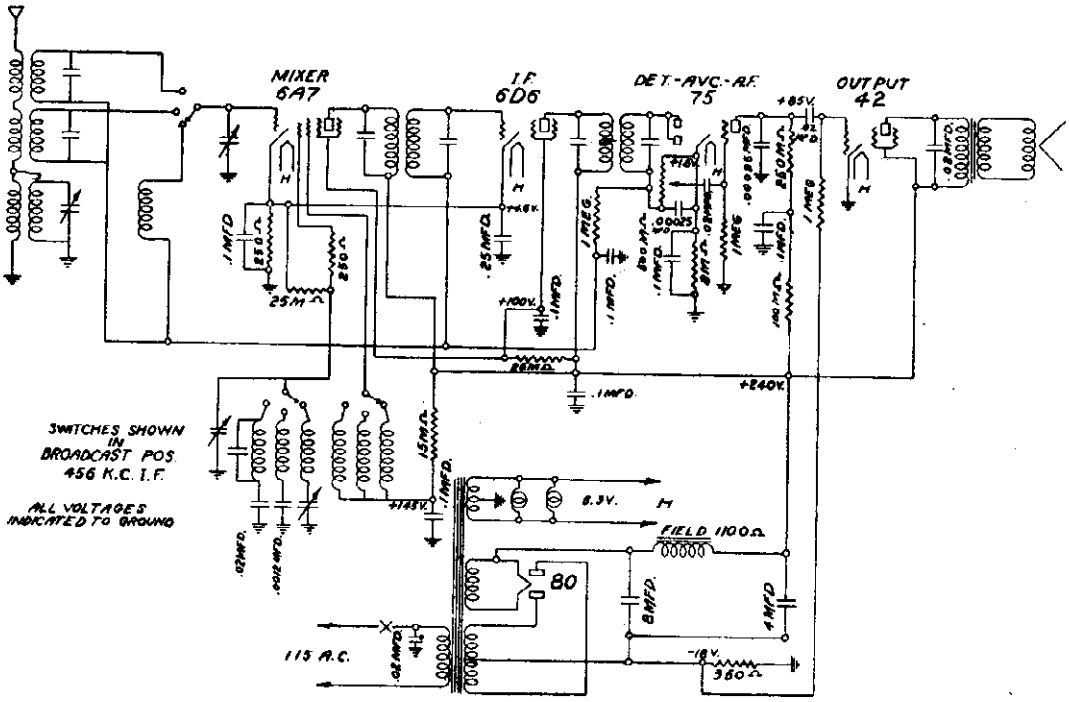

Five Tube A.C. Superheterodyne X8

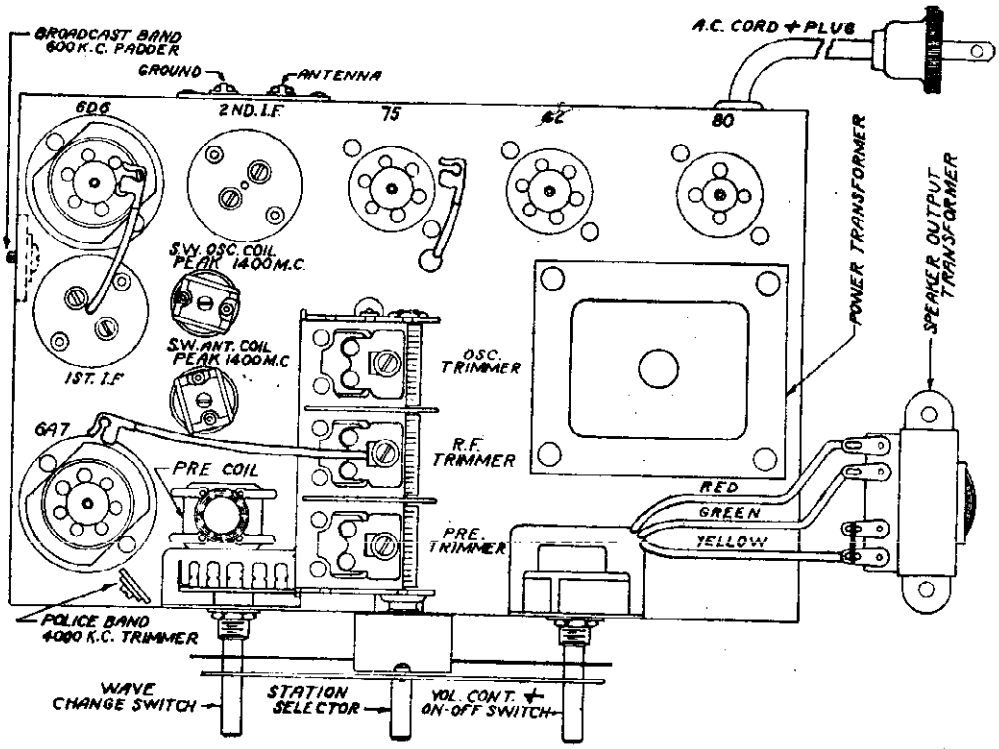

©John F. Rider, Publisher

Five Tube A.C. All Wave Superheterodyne X8

This receiver is designed to operate over three tuning ranges. The broadcast range which extends from 540 to 1700 Kilocycles (KC) (175 to 550 meters), Police and Aviation Band which extends from 1700 to 5000 Kilocycles (KC) (52 to 175 Meters) and the International Short Wave Band which extends from 5800 to 15,200 Kilocycles (KC) (18.5 to 52 meters). This short wave range is the one which includes the four internationally assigned bands—the 19, 25, 31 and 49 meter bands.

ALIGNMENT DATA AND SERVICING

BROADCAST BAND ALIGNMENT Adjust the oscillator to 1400 KC and connect the output to the antenna post marked "A" through a .0001 mfd. mica condenser to give the equivalent of an antenna about 60 feet. Set the receiver pointer to 1400 KC and adjust the rear gang condenser trimmer (oscillator circuit) to peak. After this has been carefully done, the next step is to adjust the center and front trimmers of the gang condenser to peak. The center gang section tunes the R.F. or grid coil of the 6A7 tube and the front condenser section tunes the pre-selector stage circuit.

Next, re-set the dial pointer on the receiver and the test oscillator to 600 KC. Slowly increase or decrease the oscillator padding condenser and at the same time continuously tune back and forth across the signal with the receiver until the maximum reading is obtained on the output meter. This adjustment seems a little complicated but is the easiest way to adjust the oscillator to the pre-selector or R.F. section. The padding condenser is located on the left hand end of the chassis near the 6D6 tube.

Return to 1400 KC and again go over the adjustments of this frequency to be certain that they were not put slightly out of alignment when adjustment was made at 600 KC.

This completes the correct sequence of operations in properly aligning the receiver for the Broadcast Band, and **must always be done before** attempting to align the Short Wave Bands.

FOREIGN BAND The Foreign Band of 19 to 49 meters can be adjusted by the two trimmers on the short wave coil located on the top of the chassis. Set the test oscillator to 14,000 KC. The oscillator coil is located near the 1st I.F. Transformer and the antenna or R.F. coil is located directly in front of the Short Wave oscillator coil and about midway between the 1st I.F. Transformer and the 6A7 tube. These two trimmers should be adjusted for peak at 14,000 KC and as the inherent design of the circuit has been expressly designed for simplicity in servicing, no other adjustments are necessary for aligning this band. **Note:** Always start this procedure by having the oscillator coil trimmer loose (out all the way), and the antenna coil trimmer fairly tight (in all the way); otherwise it is possible to make a false alignment on the image frequency.

Important: Do not attempt any adjustment of the gang condenser trimmers in aligning the Foreign Band as this will throw the Broadcast Band out of alignment.

POLICE BAND There is only one adjustment to be made in the alignment of the Police Band. Due to the circuit design and correct matching of the coils, no oscillator adjustment is necessary.

Set the dial pointer to 4000 KC (also the test oscillator) and adjust the antenna coil trimmer to resonance. The two police band coils are under the chassis, but the antenna coil trimmer for this band is on top of the chassis and is located at the left front corner along side of wave band switch.

Important: This is the only adjustment necessary for the Police Band. Do not attempt any adjustment of the gang condenser trimmers in aligning the Police Band, otherwise the Broadcast Band will be thrown out of alignment.

This receiver is designed to operate from a power supply main of 110-120 volts, 60 cycle alternating current (AC). **Never plug into a DC outlet.**

GENERAL DATA The alignment of this receiver requires the use of a test oscillator that will cover the frequencies of 456, 600, 1400, 1800, 4000, 6000, and 14,000 KC and an output meter to be connected across the primary or secondary of the output transformers. If possible, all alignments should be made with the volume control on maximum and the test oscillator ouput as low as possible, to prevent the AVC from operating and giving false readings.

CORRECT ALIGNMENT PROCEDURE The intermediate frequency (I.F.) stage should be aligned properly as the first step. After the I.F. transformers have been properly adjusted and peaked, the Broadcast Band should always be the next procedure; after which, either or both of the Short Wave Bands may be aligned.

I.F. ALIGNMENT Adjust the test oscillator to 456 KC and connect the output to the grid of the first detector tubes (6A7) through a .05 or .1 mfd. condenser. The ground on the test oscillator can be connected to the chassis ground. Align all four I.F. trimmers to peak or maximum reading on the output meter.

PARTS LIST

Part No.	Description	Part No.	Description
P188	25,000 Ohm ½ Watt Resistor	P180	Elect. Condenser
P185	25,000 Ohm 1 Watt Resistor	P170	350 Ohm Resistor
P280	100,000 Ohm ½ Watt Resistor	P175	Oscillator Coil
P138	250,000 Ohm ½ Watt Resistor	P176	A.C. Plug & Cord
P182	1 Megohm ½ Watt Resistor	P182	Speaker Output Transformer
P143	.02 Mfd. 400 Volt Condenser	P189	1st I.F. Transformer
P142	.1 Mfd. 200 Volt Condenser	P190	2nd I.F. Transformer
P276	.1 Mfd. 400 Volt Condenser	P617	Padding Condenser
P141	.25 Mfd. 200 Volt Condenser	G560	Short Wave Antenna Coil
P479	.0012 Mfd. 200 Volt Condenser	G561	Short Wave Oscillator Coil
P147	.00025 Mica Condenser	P193	Pre-Selector Coil
P435	6" Speaker Cone Only	P306	Power Transformer
P439	Speaker Field Coil	G562	Police Band Antenna Coil
G584	Spider & Voice Coil Unit—Complete	G563	Police Band Oscillator Coil
	8" Dynamic Speaker	P642	3 Gang Condenser
P634	Knob	P630	Volume Control & "On-Off" Switch
P638	Dial Glass	P629	Wave Change Switch
P632	Dial & Scale—Complete	P138	250 Ohm ½ Watt Resistor
P124	Pilot Light	P188	8,000 Ohm ½ Watt Resistor
		P258	15,000 Ohm ½ Watt Resistor

CONTINENTAL RADIO

MODEL Z-2
Schematic, Volts
Socket, Trimmer

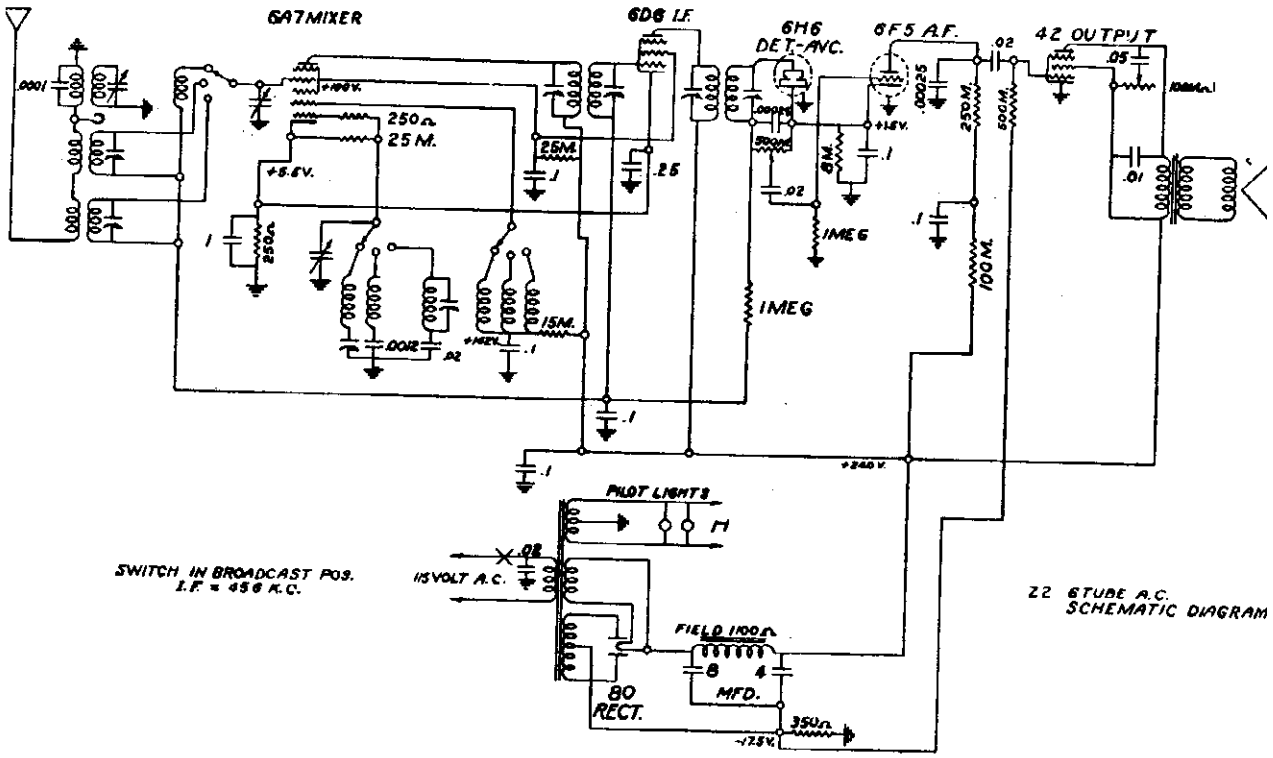

Z2 6 TUBE A.C. SCHEMATIC DIAGRAM

Six Tube A.C. All Wave Superheterodyne
Z2 Chassis

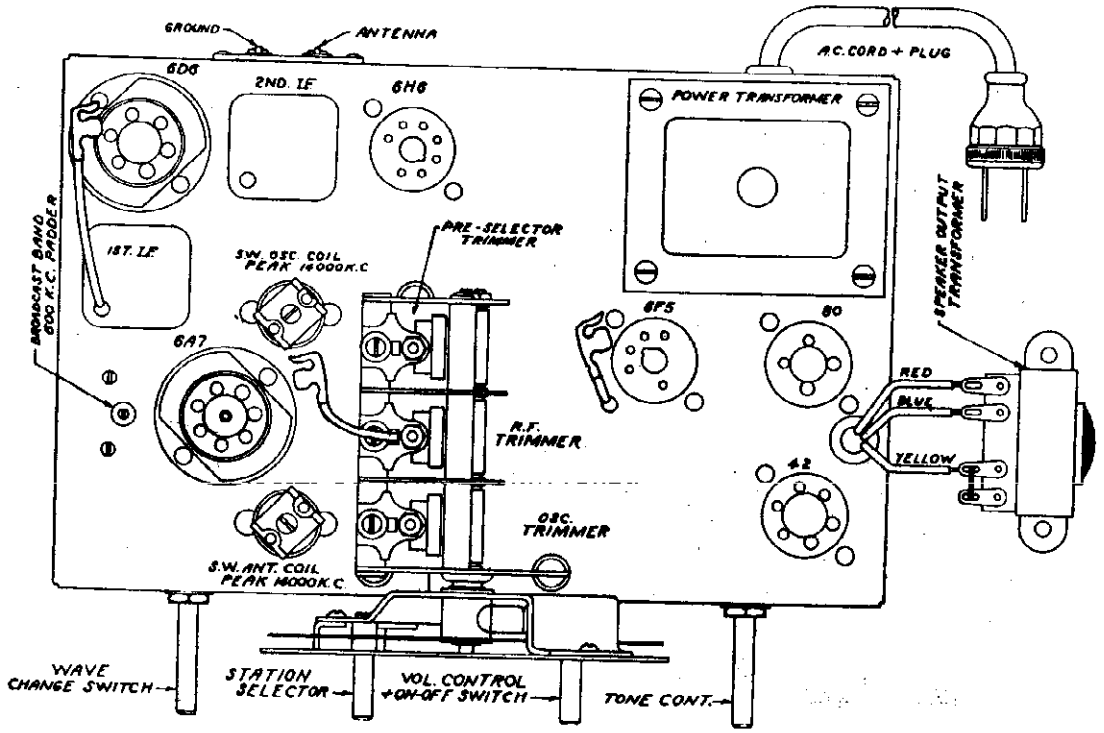

©John F. Rider Publisher

Six Tube A.C. All Wave Superheterodyne

This receiver is designed to operate over three tuning ranges. The broadcast range which extends from 540 to 1700 Kilocycles (KC) (175 to 550 meters), Police and Aviation Band which extends from 1700 to 5000 Kilocycles (KC) (52 to 175 Meters) and the International Short Wave Band which extends from 5800 to 15,200 Kilocycles (KC) (18.5 to 52 meters). This short wave range is the one which includes the four internationally assigned bands—the 19, 25, 31 and 49 meter bands.

ALIGNMENT DATA AND SERVICING

I.F. ALIGNMENT Adjust the test oscillator to 456 KC and connect the output to the grid of the first detector tubes (6A7) through a .05 or .1 mfd. condenser. The ground on the test oscillator can be connected to the chassis ground. Align all four I.F. trimmers to peak or maximum reading on the output meter.

BROADCAST BAND ALIGNMENT Adjust the oscillator to 1400 KC and connect the output to the antenna post marked "A" through a .0001 mfd. mica condenser to give the equivalent of an antenna about 60 feet. Set the receiver pointer to 1400 KC and adjust the rear gang condenser trimmer (oscillator circuit) to peak. After this has been carefully done, the next step is to adjust the center and front trimmers of the gang condenser to peak. The center gang section tunes the R.F. or grid coil of the 6A7 tube and the front condenser section tunes the pre-selector stage circuit.

Next, re-set the dial pointer on the receiver and the test oscillator to 600 KC. Slowly increase or decrease the oscillator padding condenser and at the same time continuously tune back and forth across the signal with the receiver until the maximum reading is obtained on the output meter. This adjustment seems a little complicated but is the easiest way to adjust the oscillator to the pre-selector or R.F. section. The padding condenser is located on the left hand side of the chassis, directly to the left of the 6A7 tube and in front of the first I.F. transformer.

Return to 1400 KC and again go over the adjustments of this frequency to be certain that they were not put slightly out of alignment when adjustment was made at 600 KC.

This completes the correct sequence of operations in properly aligning the receiver for the Broadcast Band, and **must always be done before** attempting to align the Short Wave Bands.

FOREIGN BAND The Foreign Band of 19 to 49 meters can be adjusted by the two trimmers on the short wave coil located on the top of the chassis. Set the test oscillator to 14,000 KC. The oscillator coil is located near the 1st I.F. Transformer and the antenna or R.F. coil is located directly in front of the Short Wave oscillator coil and about midway between the 1st I.F. Transformer and the 6A7 tube. These two trimmers should be adjusted for peak at 14,000 KC and as the inherent design of the circuit has been expressly designed for simplicity in servicing, no other adjustments are necessary for aligning this band. **Note:** Always start this procedure by having the oscillator coil trimmer loose (out all the way), and the antenna coil trimmer fairly tight (in all the way); otherwise it is possible to make a false alignment on the image frequency.

Important: Do not attempt any adjustment of the gang condenser trimmers in aligning the Foreign Band as this will throw the Broadcast Band out of alignment.

POLICE BAND There is only one adjustment to be made in the alignment of the Police Band. Due to the circuit design and correct matching of the coils, no oscillator adjustment is necessary.

Set the dial pointer to 4000 KC (also the test oscillator) and adjust the antenna coil trimmer to resonance. In preparing the test oscillator for alignment of this band, connect a 400 ohm carbon resistor in series with the .0001 mfd. condenser on the output lead of the test oscillator. This resistor is used with the test oscillator only on the Short Wave Bands and should not be used for Broadcast Band alignment. The two police band coils are under the chassis and the antenna coil trimmer is mounted on the end of the antenna coil.

Important: This is the only adjustment necessary for the Police Band. Do not attempt any adjustment of the gang condenser trimmers in aligning the Police Band, otherwise the Broadcast Band will be thrown out of alignment.

Z2

This receiver is designed to operate from a power supply main of 110-120 volts, 60 cycle alternating current (A.C). **Never plug into a DC outlet.**

GENERAL DATA The alignment of this receiver requires the use of a test oscillator that will cover the frequencies of 456, 600, 1400, 1800, 4000, 6000, and 14,000 KC and an output meter to be connected across the primary or secondary of the output transformers. If possible, all alignments should be made with the volume control on maximum and the test oscillator output as low as possible, to prevent the AVC from operating and giving false readings.

CORRECT ALIGNMENT PROCEDURE The intermediate frequency (I.F.) stage should be aligned properly as the first step. After the I.F. transformers have been properly adjusted and peaked, the Broadcast Band should always be the next procedure; after which, either or both of the Short Wave Bands may be aligned.

PARTS LIST

Part No.	Description
P160	Elect. Condenser
P170	250 Ohm Resistor
P630	Volume Control & "On-Off" Switch
P629	Wave Change Switch
P639	Tone Control
P173	Oscillator Coil
P178	A.C. Plug & Cord
P306	Power Transformer
P685	3 Gang Condenser
P188	1st I.F. Transformer
P190	2nd I.F. Transformer
P183	Pre-Selector Coil
G580	Short Wave Antenna Coil
G581	Short Wave Oscillator Coil
P617	Padding Condenser
G582	Police Band Antenna Coil
G583	Police Band Oscillator Coil
P136	250 Ohm ¼ Watt Resistor
P168	8,000 Ohm ¼ Watt Resistor
P258	15,000 Ohm ¼ Watt Resistor
P166	25,000 Ohm ¼ Watt Resistor
P165	25,000 Ohm 1 Watt Resistor
P280	100,000 Ohm ¼ Watt Resistor
P138	250,000 Ohm ½ Watt Resistor
P137	500,000 Ohm ½ Watt Resistor
P182	1 Megohm ¼ Watt Resistor
P143	.02 Mfd. 400 Volt Condenser
P142	.1 Mfd. 200 Volt Condenser
P276	.1 Mfd. 400 Volt Condenser
P141	.25 Mfd. 200 Volt Condenser
P147	.00025 Mica Condenser
P148	.05 Mfd. 200 Volt Condenser
P334	.05 Mfd. 400 Volt Condenser
P335	.01 Mfd. 600 Volt Condenser
P478	.0012 Mfd. 200 Volt Condenser
P183	Speaker Output Transformer
G573	8" Speaker Cone Only
P705	8% Speaker Field Coil
G584 A	8" Spider & Voice Coil Unit—Complete
G725	8" Dynamic Speaker with R.C.
P831	Dial & Scale—Complete
P839	Dial Glass
P124	Pilot Light
P834	Knob

CONTINENTAL RADIO

MODEL Z-4
Schematic, Volt
Socket, Trimmer

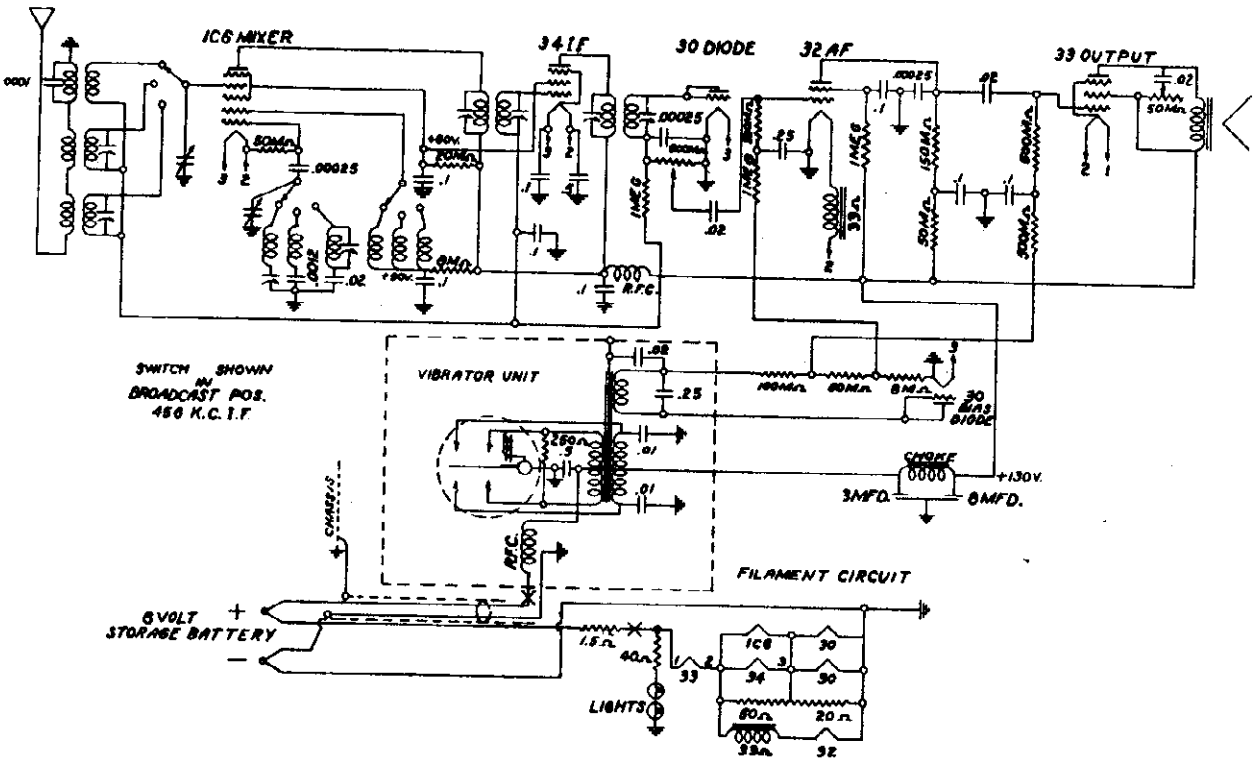

Six Tube 6 Volt Battery Superheterodyne
Z4 Chassis

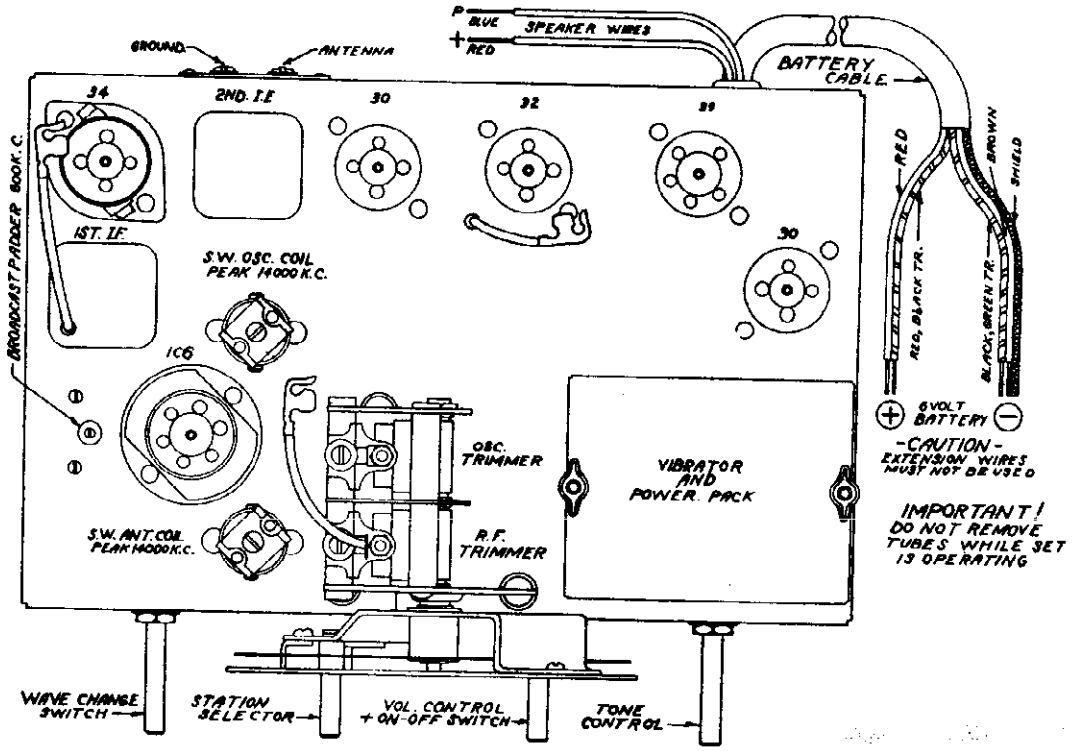

©John F. Rider, Publisher

©John F. Rider, Publisher

Six Tube 6 Volt Battery All Wave Superheterodyne

This receiver is designed to operate over three tuning ranges: the broadcast range which extends from 540 to 1700 Kilocycles (KC) (175 to 550 meters), Police and Aviation Band which extends from 1700 to 5000 Kilocycles (KC) (52 to 175 Meters) and the International Short Wave Band which extends from 5800 to 15,200 Kilocycles (KC) (18.5 to 52 meters). This latter range is the one which includes the four internationally assigned bands —the 19, 25, 31 and 49 meter bands.

ALIGNMENT DATA AND SERVICING

INFORMATION FOR THE RADIO SERVICE MAN

GENERAL DATA The alignment of this receiver requires the use of a test oscillator which will cover the frequencies of 456, 600, 1400, 1800, 4000, 6000, and 14,000 KC and an output meter which is to be connected across the primary or secondary of the output transformer. If possible, all alignments should be made with the volume control on maximum and the test oscillator output as low as possible, to prevent the AVC from operating and giving false readings.

CORRECT ALIGNMENT PROCEDURE The intermediate frequency (I.F.) stage should be aligned properly as the first step. After the I.F. transformers have been properly adjusted and peaked, the Broadcast Band should always be the next procedure; after which, either or both of the Short Wave Bands may be aligned.

I.F. ALIGNMENT Adjust the test oscillator to 456 KC and connect the output to the grid of the first detector tube (1C6) through a .05 or .1 mfd. condenser. The ground on the test oscillator can be connected to the chassis ground. Align all four I.F. trimmers to peak or maximum reading on the output meter.

BROADCAST BAND ALIGNMENT Adjust the oscillator to 1400 KC and connect the output to the antenna post marked "A" through a .0001 mfd. mica condenser to give the equivalent of an antenna about 60 feet. Set the receiver pointer to 1400 KC and adjust the rear gang condenser trimmer (oscillator circuit) to peak. After this has been carefully done, the next step is to adjust the front trimmer of the gang condenser to peak. The front condenser section tunes the RF or grid circuit of the 1C6 tube. Next re-set the dial pointer on the receiver and the test oscillator to 600 KC. Slowly increase or decrease the oscillator padding condenser and at the same time continuously tune back and forth across the signal with the receiver until the maximum reading is obtained on the output meter. This adjustment may seem a little complicated but is the easiest way to adjust the oscillator to the R.F. section. The padding condenser is located on the left hand side of the chassis, directly to the left of the 1C6 tube and in front of the first I.F. transformer. Return to 1400 KC and again go over the adjustments of this frequency to be certain that they were not put slightly out of alignment when adjustment was made at 600 KC.
This completes the correct sequence of operations in properly aligning the receiver for the Broadcast Band, and **must always be done before** attempting to align the Short Wave Bands.

FOREIGN BAND ALIGNMENT The Foreign Band of 19 to 49 meters can be adjusted by the two trimmers on the short wave coils located on the top of the chassis. Set the test oscillator to 14,000 KC. In preparing the test oscillator for alignment of this band, connect a 400 ohm carbon resistor in series with the .0001 mfd. condenser on the output lead of the test oscillator. The oscillator coil is located near the 1st I.F. Transformer and the antenna or R.F. coil is located directly in front of the Short Wave oscillator coil and alongside the front section of the gang condenser. These two trimmers should be adjusted for peak at 14,000 KC and as the inherent design of the circuit has been expressly developed for simplicity in servicing, no other adjustments are necessary for aligning this band. **Note:** Always start this procedure by having the oscillator coil trimmer loose (out all the way), and the antenna coil trimmer fairly tight (in all the way); otherwise it is possible to make a false alignment on the image frequency. In order to prevent alignment on the image frequency, it is suggested that the following check be made: Readjust the pointer to 13,100 KC where the image frequency should be found. If properly aligned, the image frequency will be found to be weaker. If, however, the signal at 13,100 KC is found to be stronger than the signal at 14,000 KC, it signifies that alignment was incorrectly made on the image frequency.

IMPORTANT: Do not attempt any adjustment of the gang condenser trimmers in aligning the Foreign Band as this will throw the Broadcast Band out of alignment.

POLICE BAND ALIGNMENT There is only one adjustment to be made in the alignment of the Police Band. Due to the circuit design and correct matching of the coils, no oscillator adjustment is necessary. Set the dial pointer to 4000 KC (also the test oscillator) and adjust the antenna coil trimmer to resonance. In preparing the test oscillator for alignment of this band, connect a 400 ohm carbon resistor in series with the .0001 mfd. condenser on the output lead of the test oscillator. This resistor is used with the test oscillator only on the Short Wave Bands and should not be used for Broadcast Band alignment. The two police band coils are under the chassis and the antenna coil trimmer is mounted on the end of the antenna coil. **Important:** This is the only adjustment necessary for the Police Band. Do not attempt any adjustment of the gang condenser trimmers in aligning the Police Band, otherwise the Broadcast Band will be thrown out of alignment.

SERVICE DATA FOR ALL BANDS

If it is suspected that the oscillator has stopped but is doubtful due to the presence of the usual amount of noise level, it is suggested that the oscillator plate voltage be checked. To ascertain whether the tube is oscillating, ground the oscillator grid of the 1C6 (short stator and rotor plates of oscillator section on gang condenser). If oscillating properly, grounding the grid will cause an appreciable drop in oscillator voltage.

IMPORTANT NOTE: The battery must never be charged while set is in operation. If a windcharger is used, it should always be disconnected from the battery when the receiver is being used. An inexpensive single pole switch can be used for disconnecting the windcharger from the battery. This will increase the life of the tubes and give additional economy to the use of the receiver.

WINDCHARGERS

There are many types of windchargers now on the market which may be used to advantage for greater economy of receiver operation. Such chargers will pay for themselves over a period of time; by saving the cost of battery recharging; removing the inconvenience of taking the battery to a charging station; non-operation of the receiver during the charging period.

Z4

BATTERY SELECTION This receiver is designed to operate entirely from a 6 volt storage battery. It requires no other batteries. It will operate from any storage battery having a capacity ranging from 90 to 175 ampere hours. It is suggested, for the sake of greatest economy, that the largest possible capacity battery be used. The following is a schedule giving the number of hours of service on a single charge from batteries of standard capacities. A fully charged battery will provide satisfactory power for the periods specified before requiring additional charge.

90 Ampere Hour Capacity provides 60 hours use.
100 Ampere Hour Capacity provides 66 hours use.
110 Ampere Hour Capacity provides 73 hours use.
120 Ampere Hour Capacity provides 80 hours use.
150 Ampere Hour Capacity provides 100 hours use.
170 Ampere Hour Capacity provides 113 hours use.

Note: The above tabulation is rated very conservatively and in most cases, with new or correctly rated batteries in good condition, many additional hours of service can be obtained from each charge. If, for any reason, the proper hours of service are not obtained, it will be due to the use of an old battery whose condition and rating are no longer up to standard. If a brand new battery fails to give the required hours of service, it is due to the battery being wrongly rated.

PARTS LIST

Part No.	Description
P678	2 Gang Condenser
P189	1st I.F. Transformer
P190	2nd I.F. Transformer
P629	Wave Change Switch
P680	Volume Control and "On-Off" Switch
P682	Tone Control
G580	Short Wave Antenna Coil
G581	Short Wave Oscillator Coil
G582	Police Band Antenna Coil
G583	Police Band Oscillator Coil
P392	Antenna Coil
P173	Oscillator Coil
P617	Padding Condenser
P412	Filter Choke
P391	Electrolytic Condenser Dual 8 Mfd.
P392	Battery Cord
P335	.01 Mfd. 600 Volt Condenser
P478	.0012 200 Volt Condenser
P147	.00025 Mica Condenser
P490	.0001 Mica Condenser
P138	250 Ohm Resistor
P188	8,000 Ohm ¼ Watt Resistor
P419	20,000 Ohm ¼ Watt Resistor
P417	50,000 Ohm ¼ Watt Resistor
P446	Pilot Lights
P422	40 Ohm Camdohm Resistor
P423	20-50 Ohm Camdohm Resistor
P456	R.F. Choke
P411	Filter Choke
P410	Vibrator Transformer
P402	Vibrator Unit
P684	Wing Nuts
G728	Power Unit Complete with Vibrator
P457	"A" Choke
P402	9" Speaker (Midget Speaker)
P404	8" Speaker (Console Speaker)
P385	.5 Mfd. 10 Volt Condenser
P141	.25 Mfd. 200 Volt Condenser
P142	.1 Mfd. 200 Volt Condenser
P143	.02 Mfd. 400 Volt Condenser
P280	100,000 Ohm ¼ Watt Resistor
P418	150,000 Ohm ¼ Watt Resistor
P137	500,000 Ohm ¼ Watt Resistor
P162	1 Meg Ohm ¼ Watt Resistor
P637	Dial and Scale Complete
P638	Escutcheon Plate
P639	Dial Glass
P634	Knob

CORONA RADIO & TELEV. CORP.

MODEL 1
Schem
Socket

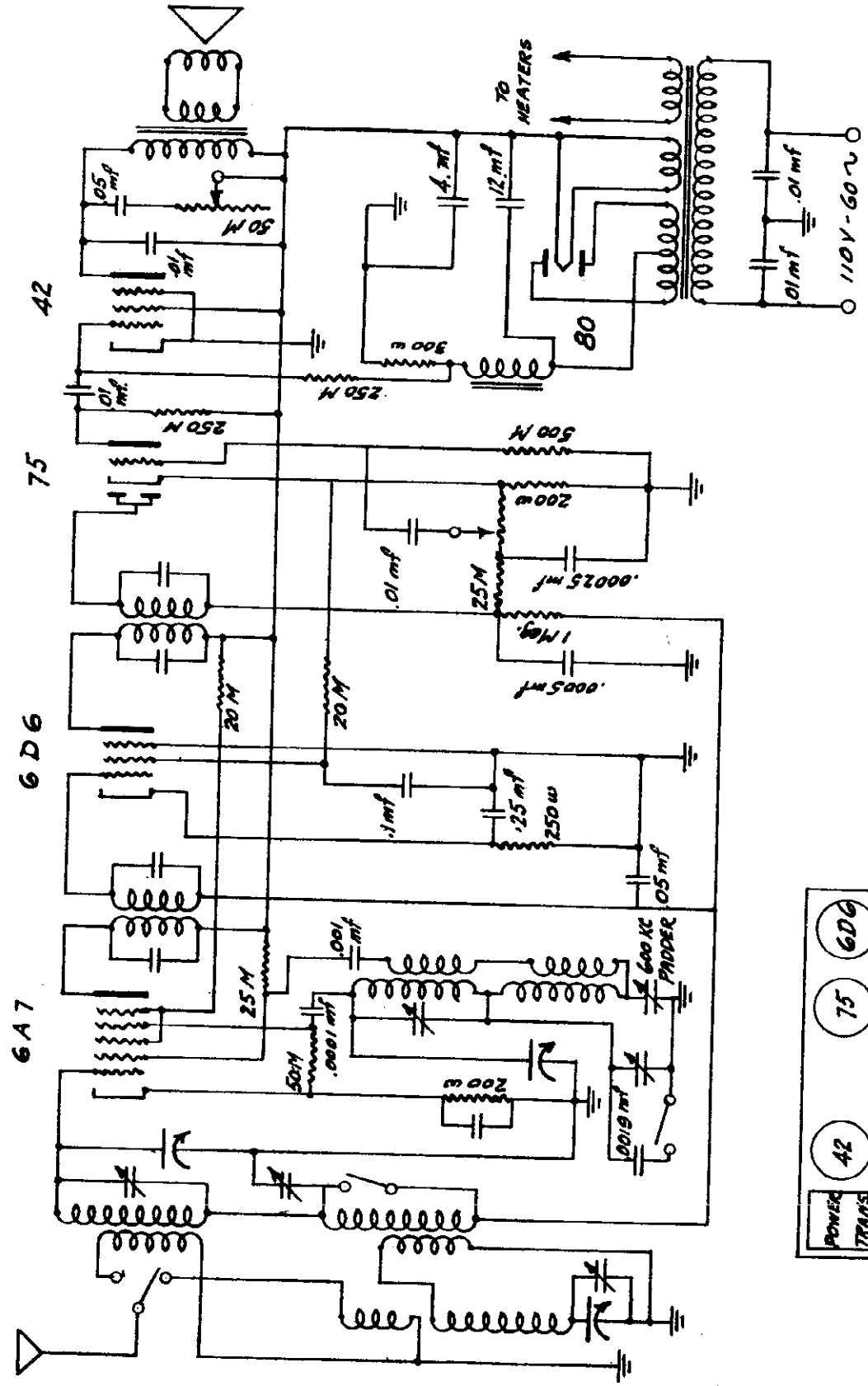

5 TUBE A·C SUPERHETERODYNE RECEIVER
I.F. PEAK 456 KC

CORONA MODEL 110

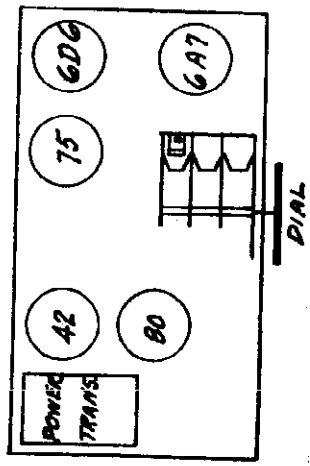

©John F. Rider, Publisher

MODEL 110
Alignment
MODEL 105
Schematic
Socket

CORONA RADIO & TELEV. CORP.

ALIGNMENT PROCEDURE, MODEL 110

Bring Int. frequency circuits in balance by applying a 456 Kc signal to the control grid of the 6A7 tube. Adjust I.F. trimmers for maximum output. Apply a 6 Megacycle note to the antenna and with the band switch on the short wave position, turn gang condenser until the pointer is at 6.00 Mc on the dial. Next, adjust the Osc. trimmer located under the chassis near the electrolytic condenser until the signal is heard. Care should be taken to make certain this trimmer is adjusted to the fundamental rather than the image; this can be checked by tuning in the image near 5.00 Mc. Next, adjust the short wave antenna trimmer, located on top of chassis near dial, for maximum gain. The low frequency padder of short wave band is fixed and no adjustment is necessary. However, check it at 2.5 Mc to determine whether or not it is still oscillating. If not, change 6A7 tube.

Change band switch to broadcast position and turn dial to extreme high frequency end (1720 Kc). Apply a 1720 Kc signal to the antenna and adjust the B.C. oscillator trimmer, located under chassis near outer edge, to 1720 Kc. Bring antenna coil into resonance by adjusting the trimmer on top of chassis near the I.F. transformers. Adjust the low frequency padder for maximum gain at 600 Kc, by applying a 600 Kc signal to the antenna and rocking the gang condenser with each adjustment of the padder until maximum gain is achieved. An output meter is necessary in order to obtain best results in alignment. Recheck 1720 Kc again as it might be thrown off by the adjustment at the low frequency end.

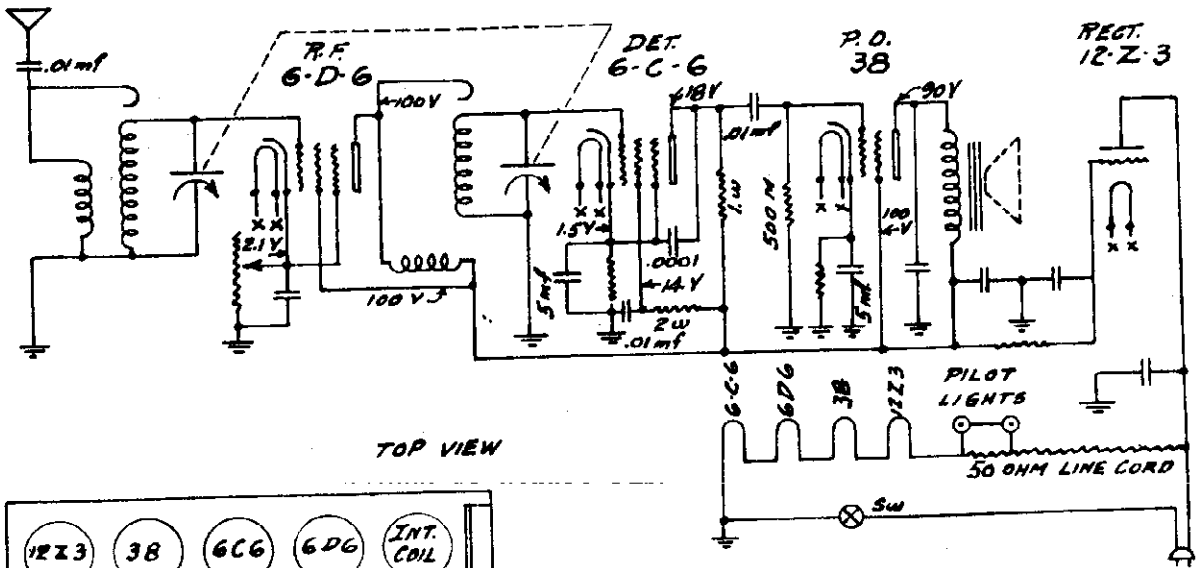

NOTE - UNDER NO CIRCUMSTANCES SHOULD THE CHASSIS BE CONNECTED TO A GROUND, INASMUCH AS A GROUND IS UNNECESSARY.

©John F. Rider, Publisher

CROSLEY RADIO CORP.

MODEL A-156
Schematic
Socket, Volta

SPECIFICATIONS

The Crosley Model A-156 auto radio is a single unit, five-tube superheterodyne receiver. The power supply unit is built into a completely shielded compartment and is an integral part of the receiver chassis.

TUBES AND VOLTAGE LIMITS

The following table gives the functions of the tubes used, together with the voltage readings between the tube socket contacts and the receiver chassis. Voltage readings should be taken with a 1000 ohm per volt, 250 volt voltmeter (except filaments) with receiver in operating condition and no signal input. The filament voltages should be measured with an accurate low range D-C voltmeter (approximately 0 to 10 volts). Voltage limits may vary plus or minus 10% of values given.

DECEMBER, 1935

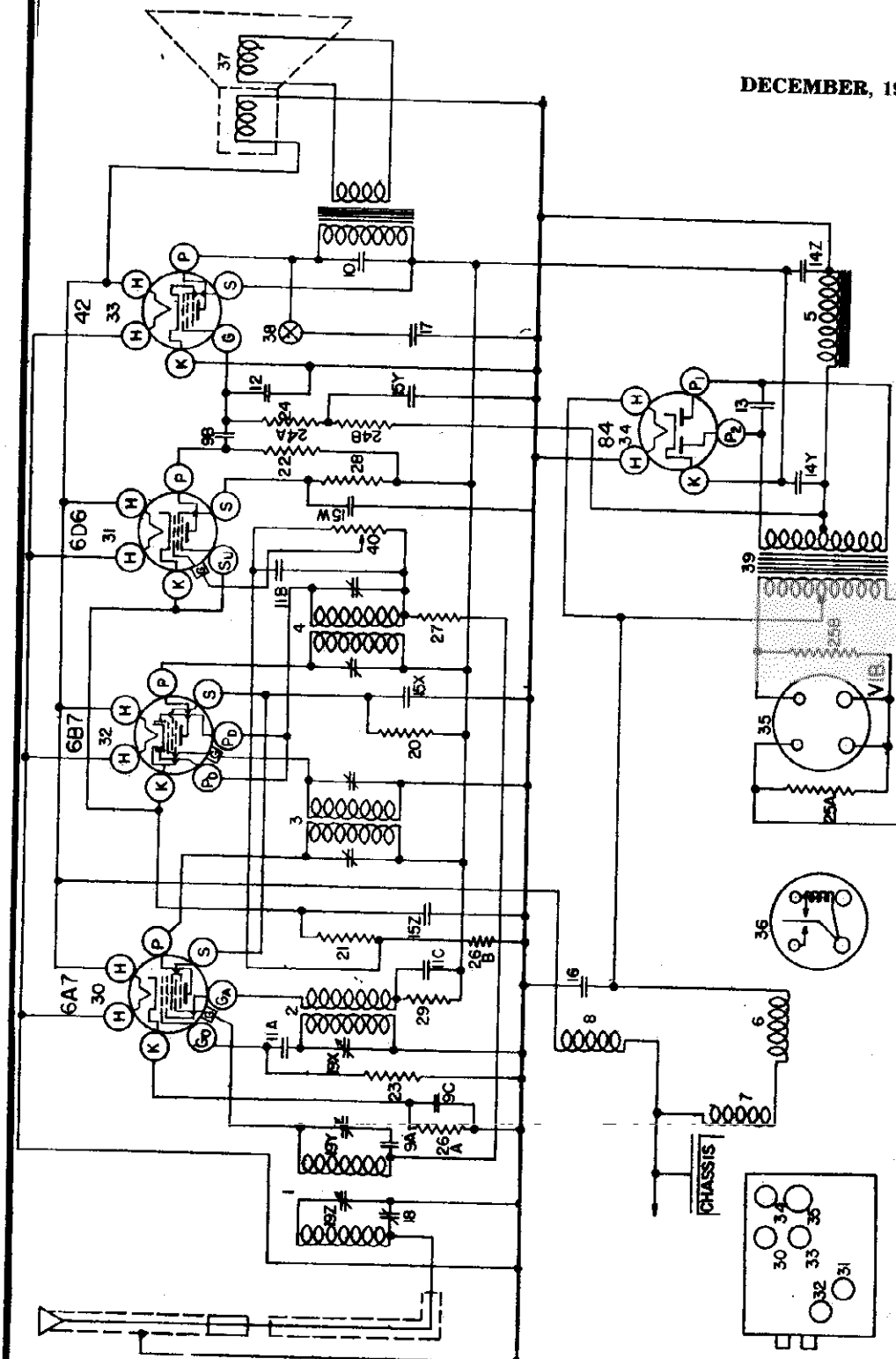

TUBE SOCKET VOLTAGE READINGS

Tube	Function	H	P	P2	S	G	K	Su	Ga	Go
6A7	Osc.-Mod.	6.0	230	—	100	0	6.0	—	220	0 to −30
6B7	I-F Diode Det. & AVC	6.0	230	—	100	0	2.0	—	—	—
6D6	1st A-F Amp.	6.0	55	—	20	0	2.0	—	—	—
42	Output	6.0	220	—	230	−7*	0	—	—	—
84	Rectifier	6.0	230	230	—	—	—	—	—	—

Power Output Approximately 3 Watts.
Battery Drain Approximately 6.3 Amperes at 6 volts.
*True Bias Reading. Approximately —15 Volts Measured Across Filter Choke

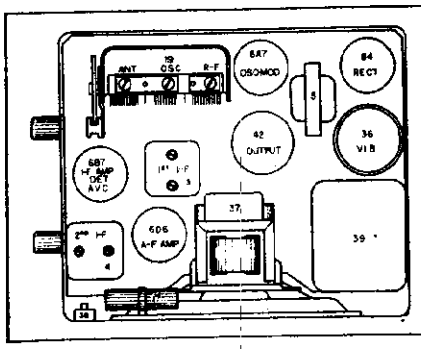

Fig. 2. Top View

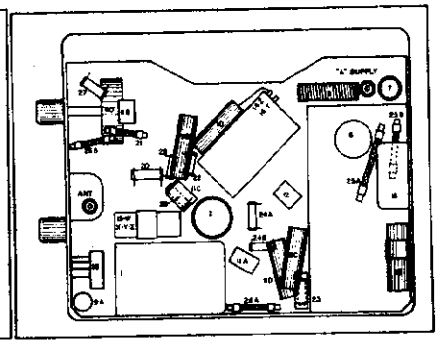

Fig. 3. Bottom View

ALIGNMENT PROCEDURE

All the circuits in this receiver are very accurately adjusted at the factory and normally should need no further adjustment. However, if it is definitely known that an adjustment is necessary, the circuits can be properly aligned ONLY with the use of a modulated signal generator and an output meter.

CONNECTING OUTPUT METER

Connect one terminal of the output meter to the plate and the other terminal to the screen of the 42 Output tube. Be sure the meter is protected from D.C. by connecting a condenser (.1 mfd. or larger—not electrolytic) in series with one of the leads

NOTE: The receiver chassis must be in its case and a speaker similar to the one used with the receiver must be connected to the chassis before making any adjustments. It is also advisable to use a spare control unit for making adjustments of the volume control and tuning condenser. A standard control unit with short cables (6" to 8") makes a very convenient and useful tool. If it is desired to shorten a pair of long cables it will be absolutely necessary to heavily tin the cables before cutting them.

1. Tuning I-F Amplifier To 262 Kilocycles.

(a) Connect the output of the signal generator through a .02 mfd., or larger, condenser to the top cap of the 6A7 Osc-Mod tube, leaving the tube's grid clip in place. Connect the ground lead from the signal generator to the receiver chassis frame. KEEP THE GENERATOR LEADS AS FAR AS POSSIBLE FROM THE GRID LEADS OF THE OTHER SCREEN GRID TUBES.

(b) Adjust the station selector so that the rotor plates of the tuning condenser are completely in mesh.

(c) Turn the volume control of the receiver full on and turn the tone control to the treble position.

(d) Set the signal generator to 262 kilocycles.

(e) Adjust both trimmers located on the 2nd I-F transformer for maximum output. (Fig. 2).

(f) Adjust both trimmers located on the 1st I-F transformer for maximum output.

(g) Repeat operations (e) and (f) for more accurate adjustments.

ALWAYS USE THE LOWEST SIGNAL GENERATOR OUTPUT THAT WILL GIVE A REASONABLE OUTPUT METER READING.

2. Aligning R-F Amplifier.

(a) Connect the output lead from the signal generator through a .00025 mfd. condenser to the "ANT" connection of the receiver.

(b) Set the signal generator to 1400 kilocycles.

(c) Adjust the station selector to 140 on the dial.

(d) Adjust the trimmer on the "OSC" section of the tuning condenser for maximum output.

(e) Adjust the trimmer on the "R-F" section of the tuning condenser for maximum output.

(f) Adjust the trimmer on the "ANT" section of the tuning condenser for maximum output.

(g) Readjust the station selector for maximum output. DO NOT READJUST THE OSC. TRIMMER.

(h) Repeat operations (e) and (f) for more accurate adjustments.

3. Adjusting Antenna Compensating Condenser.

(a) Set the signal generator to 600 kilocycles.

(b) Tune in the 600 kilocycle signal with the station selector for maximum output.

(c) Adjust the antenna compensating condenser, Illus. No. 18, Fig. 3, for maximum output.

(d) Repeat operations (b) and (c) alternately until no further improvement in output can be obtained.

(e) Set the signal generator to 1400 kilocycles again.

(f) Tune-in the 1400 kilocycle signal with the station selector for maximum output.

(g) Readjust the trimmer on the "ANT" section of the tuning condenser for maximum output.

It will be necessary to adjust the antenna compensating condenser to the car antenna after the receiver has been installed in the car.

(a) After the installation is complete, tune-in a WEAK station between 55 and 65 on the dial.

(b) Adjust the antenna compensating condenser for maximum volume in the speaker.

PARTS LIST—MODEL A-156

Figures in first column refer to parts in Diagrams.

Item No.	Part No.	Description
1	G1 —38274	Pre-selector Coil Assm. Complete
	G41—32000	Pre-selector Coil only
	W —38276B	Shield
	W —38277	Wood Coil Spacer (2)
	W —35400A	Rubber Band
2	G27—32002	Osc Coil only
	W —26891	Insulating Washer
	W —21541A	Retaining Ring
	W —25025B	Shield
	W —25200	Coil Socket
3	G13—32005	1st I. F. Assm.
4	G14—32005	2nd I. F. Assm.
5	G25—24628	Filter Choke
6	G10—28067	R. F. Choke
7	G4 —32977	Motor Noise Choke
8	G3 —32977	Motor Noise Choke
9A	W —28621	Condenser 0.02 Mfd. 200 V.
9B	W —28621	Condenser 0.02 Mfd. 200 V.
9C	W —28621	Condenser 0.02 Mfd. 200 V.
9D	W —28621	Condenser 0.02 Mfd. 200 V.
10	W —23635	Condenser 0.006 Mfd. 400 V.
11A	G1 —34002	Condenser 0.00025 Mfd.
11B	G1 —34002	Condenser 0.00025 Mfd.
11C	G1 —34002	Condenser 0.00025 Mfd.
12	G3 —34002	Condenser 0.0005 Mfd.
13	W —32762	Condenser 0.005 Mfd. 1000 Volt
14Z, 14Y, 15Z, 15Y, 15X, 15W	W —37020	Condenser 4.0 Mfd. Condenser 5.0 Mfd. Condenser 0.1 Mfd. 160 V. Condenser 0.1 Mfd. 160 V.
	W —37021	Condenser 0.05 Mfd. 160 V. Condenser 0.05 Mfd. 160 V.
16	W —37061	Condenser 0.50 Mfd. 160 V.
17	W —37047	Condenser 0.015 Mfd. 400 V.
18	W —32926A	Condenser Ant. Series Trimmer
19Z, 19Y, 19X	G41—33002	3 Section Tuning Condenser Gang
	W —38204B	Gear Assm.
	G1 —38227	Pinion & Coupling Link Assm.
20	—32331	Resistor 55,000 Ohms ½ W.
21	W —25937	Resistor 275 Ohm (½ W. Flex.)
22	—35929	Resistor 150,000 Ohms ¼ W.
23	—21237A	Resistor 60,000 Ohms ¼ W.
24A	—35601	Resistor 300,000 Ohm ¼ W.
24B	—35601	Resistor 300,000 Ohm ¼ W.
25A	—27504	Resistor 100 Ohm ½ W.
25B	—27504	Resistor 100 Ohm ½ W.
26A	—22514	Resistor 750 Ohm ½ W. Flex.
26B	—22514	Resistor 750 Ohm ½ W. Flex.
27	—34883	Resistor 2.0 Megohm ¼ W.
28	—35602	Resistor 1.0 Megohm ¼ W.

Item No.	Part No.	Description
29	W —22196	Resistor 20,000 Ohms ¼ W.
30	G47—28807	Socket 6A7
31	G75—28807	Socket 6D6
32	G48—28807	Socket 6B7
33	G25—28807	Socket 42
34	G45—28807	Socket 84
35	G1 —28807	Socket VIB
	W —31212	Tube Shield (Half)
	W —31210	Shield Ring
	W —24394A	Shield Base
36	G6 —38000	Vibrator (D. A. Corp. No. 5040000)
	G2 —38281	Vibrator Partition Assm.
37	33—BL—M	Speaker
38	W —35741	Tone Control Switch
39	G6 —32769	Power Transformer
40	W —37256	Volume Control 1. Megohm
	W —38257C	Cover Bracket
	C —37159	Case
	C —38220A	Top Cover
	C —38224A	Bottom Cover
	W —37057	Emblem
	W —32947	Hole Plug
	*G1 —38390	V. Remote Control Complete
	* —38384	V. Remote Control Head Assm.
	—38377	Dial Glass
	* —37707	Pointer
	*W —38393	Dial Face
	*G10—23472	Knob (2)
	—38389	Dial Light Socket Assm.
	—38443	On-Off Switch
	—38448	Switch Cover
	G5 —38390	V. Remote Control Complete
	—38544	V. Remote Control Head Assm.
	—38377	Dial Glass
	—37708	Pointer Assm.
	—38441	Dial Face Glass
	G9 —23472	Knobs (2)
	—38389	Dial Light Socket Assm.
	—38443	On-Off Switch
	—38448	Switch Cover
	G2 —38310	Control Cable Assm. (Cond. Dr.)
	G3 —38310	Control Cable Asm. (Level Con.)
	—32783A	Ant. Lead
	G14—32750	"A" Lead with Fuse Assm.
	G15—32750	"A" Lead to Set
	W —31103	Fuse 10 Amp.
	W —32956A	Mounting Stud (2)
	—6213	Mounting Nut (2)
	W —32957	Mounting Lock Washer (2)
	W —38336	Steering Column Brkt. Assm.
	W —31625A	Suppressor, Distributor
	W —29754A	Condenser 0.5 Mfd. (Elim) (2)

*Used on sets with serial numbers 1,064,155 to 1,065,154 inclusive.

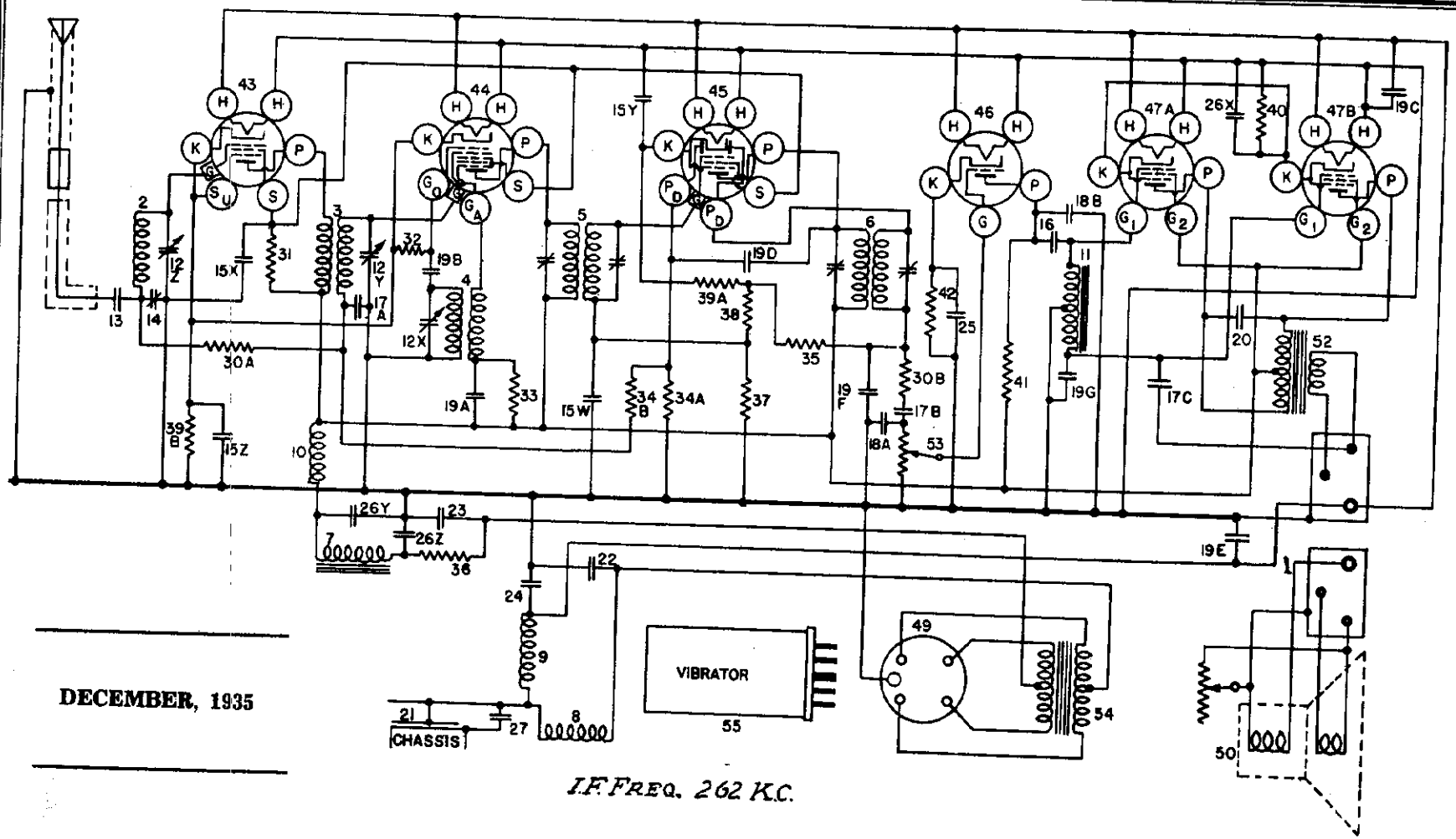

DECEMBER, 1935

TUBE SOCKET VOLTAGE READINGS

Tube	Function	H	P	S	G	K	Ga	Go
6D6	R-F Amplifier	6.0	220	100	0	5.7	—	—
6A7	Osc.-Mod.	6.0	220	100	0	5.7	130	−5 to −10
6B7	I-F Amp. & Diode Detector	6.0	220	100	0	6.8	—	—
76	Ist A-F Amp.	6.0	130	—	0	8.0	—	—
41	(2) Output	6.0	210	—	0	18.0	—	—

POWER OUTPUT APPROXIMATELY 3 WATTS.
BATTERY DRAIN APPROXIMATELY 6.2 AMPERES AT 6 VOLTS.

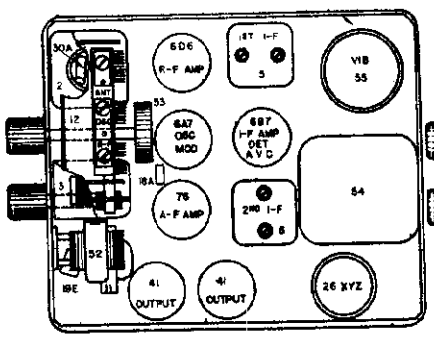

Fig. 2. Top View

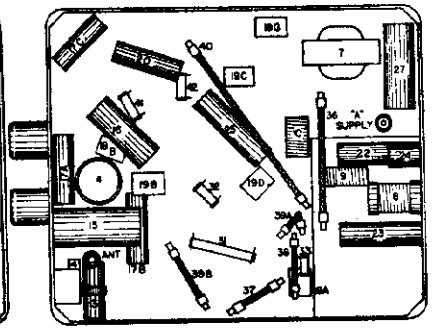

Fig. 3. Bottom View

SPECIFICATIONS

The Crosley Model A-166 auto radio is a two-unit, six-tube superheterodyne receiver with an under-cowl type speaker. The power supply unit is an integral part of the receiver chassis and is completely shielded from the remainder of the receiver.

TUBES AND VOLTAGE LIMITS

The following table gives the functions of the tubes used, together with the voltage readings between the tube socket contacts and the receiver chassis. Voltage readings should be taken with a 1000 ohm per volt, 250 volt voltmeter with receiver in operating condition and no signal input. Voltage limits may vary plus or minus 10% of values given.

ALIGNMENT PROCEDURE

All the circuits in this receiver are very accurately adjusted at the factory and normally should need no further adjustment. However, if it is definitely known that an adjustment is necessary the circuits can be properly aligned ONLY with the use of a modulated signal generator and an output meter.

CONNECTING OUTPUT METER

Connect one terminal of the output meter to the plate of one of the 41 Output tubes and connect the other terminal to the plate of the other Output tube. Be sure the meter is protected from D.C. by connecting a condenser (.1 mfd. or larger—not electrolytic) in series with one of the leads.

NOTE: The receiver chassis must be in its case and a speaker similar to the one used with the receiver must be connected to the chassis before making any adjustments. It is also advisable to use a spare control unit for making adjustments of the volume control and tuning condenser. A standard control unit with short cables (6" to 8") makes a very convenient and useful tool. If it is desired to shorten a pair of long cables it will be absolutely necessary to heavily tin the cables before cutting them.

1. Tuning I-F Amplifier to 262 Kilocycles.

(a) Connect the output of the signal generator through a .02 mfd., or larger, condenser to the top cap of the 6A7 tube, leaving the tube's grid clip in place. Connect the ground lead from the signal generator to the receiver chassis frame. KEEP THE GENERATOR LEADS AS FAR AS POSSIBLE FROM THE GRID WIRES OF THE OTHER SCREEN GRID TUBES.

(b) Adjust the station selector so that the rotor plates of the tuning condenser are completely in mesh.

(c) Turn the volume control of the receiver full on and turn the tone control to the treble position.

(d) Set the signal generator to 262 kilocycles.

(e) Adjust both trimmers located on top of the 2nd I-F transformer for maximum output. (Fig. 2).

(f) Adjust both trimmers located on top of the 1st I-F transformer for maximum output.

(g) Repeat operations (e) and (f) for more accurate adjustments.

ALWAYS USE THE LOWEST SIGNAL GENERATOR OUTPUT THAT WILL GIVE A REASONABLE OUTPUT METER READING.

2. Aligning R-F Amplifier.

(a) Connect the output lead from the signal generator through a .00025 mfd. condenser to the "ANT" connection of the receiver.

(b) Set the signal generator to 1400 kilocycles.

(c) Adjust the station selector to 140 on the dial.

(d) Adjust the trimmer on the "OSC." section of the tuning condenser for maximum output. (Fig. 2).

(e) Adjust the trimmer on the "R-F" section of the tuning condenser for maximum output.

(f) Adjust the trimmer on the "ANT" section of the tuning condenser for maximum output.

(g) Readjust the station selector for maximum output. DO NOT READJUST THE "OSC" TRIMMER.

(h) Repeat operations (e) and (f) for more accurate adjustments.

3. Adjusting Antenna Compensating Condenser.

(a) Set the signal generator to 600 kilocycles.

(b) Tune-in the 600 kilocycle signal with the station selector for maximum output.

(c) Adjust the antenna compensating condenser, Illus. No. 14, Fig 3, for maximum output.

(d) Repeat operations (b) and (c) alternately until no further improvement in output can be obtained.

(e) Set the signal generator to 1400 kilocycles again.

(f) Tune-in the 1400 kilocycle signal with the station selector for maximum output.

(g) Readjust the trimmer on the "ANT" section of the tuning condenser for maximum output.

It will be necessary to adjust the antenna compensating condenser to the car antenna after the receiver has been installed in the car.

(a) After the installation is complete, tune-in a WEAK station between 55 and 65 on the dial.

(b) Adjust the antenna compensating condenser for maximum volume in the speaker.

PARTS LIST—MODEL A-166

Figures in first column refer to parts in Diagrams.

Item No.	Part No.	Description
1		
2	G83—32000	Ant. Coil
	W —38420	Ant. Coil Shield
	W —32913	Wood Coil Spacer
3	G22—32001	R. F. Coil
	W —32897	R. F. Coil Shield
	W —32912	Wood Coil Spacer
4	G27—32002	Osc. Coil
	W —25025B	Osc. Coil Shield
	W —25200A	Coil Socket
	W —26891	Insulating Washer
	W —21541C	Retaining Ring
5	G16—32005	1st I. F. Coil Assm.
6	G15—32005	2nd I. F. Coil Assem.
7	G31—24628	Coil, "B" Filter Choke
8	G15—28067	Coil, "A" Filter Choke
9	G6 —32997	Coil, Motor Noise Filter Choke
10	G5 —32997	Coil, Motor Noise "B" Choke
11	G11—29535	Coil, A. F. Grid Coupling Choke
12Z, 12Y, 12X	G44—33002	3 Section Tuning Cond. Gang
13	W —38367	Condenser, 0.02 Mfd. 200 V.
14	W —38350	Condenser, Ant. Series Trimmer
15Z		Condenser, 0.05 Mfd. 400 V.
15Y		Condenser, 0.1 Mfd. 400 V.
15X	W —38419	Condenser, 0.05 Mfd. 400 V.
15W		Condenser, 0.1 Mfd. 400 V.
16	W —22838	Condenser, 0.1 Mfd. 400 V.
17A	W —32779	Condenser, 0.02 Mfd. 200 V.
17B	W —32779	Condenser, 0.02 Mfd. 200 V.
17C	W —32779	Condenser, 0.02 Mfd. 200 V.
18A	G2 —34002	Condenser, 0.0001 Mfd. (Mica)
18B	G2 —34002	Condenser, 0.0001 Mfd. (Mica)
19A To 19 G	G1 —34002	Condenser, 0.00025 Mfd. (Mica) Condenser, 0.00025 Mfd. (Mica) Condenser, 0.00025 Mfd. (Mica)
20	W —25435	Condenser, 0.003 Mfd. 400 V.
21	W —32904	Condenser, 20 Mmf.
22	W —38433	Condenser, 0.5 Mfd. 160 V.
23	W —38431	Condenser, 0.15 Mfd. 400 V.
24	W —37190	Condenser, 0.02 Mfd. 160 V.
25	W —38430	Condenser, 4. Mfd.
26Z, 26Y, 26X	W —38427	Condenser, 8. Mfd. 350 V. Condenser, 8. Mfd. 350 V. Condenser, 12. Mfd. 25 V.
27	—29910A	Condenser, 0.25 Mfd. 200 V.
28	W —35784A	Condenser, 0.5 Mfd. 160 V.
30A	—35600	Resistor, 100,000 Ohm, ¼ W.
30B	—35600	Resistor, 100,000 Ohm, ¼ W.
31	—36952	Resistor, 30,000 Ohm, 1 W. Insul.
32	—35928	Resistor, 60,000 Ohm, ¼ W. Insul.
33	—36760	Resistor, 20,000 Ohm, ¼ W. Insul.
34A	—35602	Resistor, 1 Megohm, ¼ W., Insulated Type
34B	—35602	Resistor, 1 Megohm, ¼ W., Insulated Type
35	—35601	Resistor, 300,000 Ohm, ⅛ W., Insulated Type
36	W —32961	Resistor, 100 Ohm, 3 W., Flex.
37	W —21452	Resistor, 1100 Ohm, ¾ W., Flex.
38	W —28589	Resistor, 350 Ohm, ½ W., Flex.
39A	W —30127	Resistor, 450 Ohm, ½ W., Flex.
39B	W —30127	Resistor, 450 Ohm, ½ W., Flex.
40	W —26049	Resistor, 450 Ohm, 3 W., Flex.
41	—36761	Resistor, 40,000 Ohm, ¾ W.
42	—38428	Resistor, 4,500 Ohm, ¼ W.
43	G75—28807	Socket 6D6
44	G47—28807	Socket 6A7
45	G48—28807	Socket 6B7
46	G80—28807	Socket 76
47A	G22—28807	Socket 41
47B	G22—28807	Socket 41
	W —31212	Tube Shield–small half (Plain)
	W —31213	Tube Shield–small half (Cut Out)
	W —34174	Tube Shield–large half (Plain)
	W —34175	Tube Shield–large half (Cut Out)
	W —31210	Shield Ring
	W —32360A	Tube Shield Base
48	W —32895	Speaker Socket
49	W —32965A	Vib. Socket
	W —38413	Vib. Ground Clip
50	424—G1	Speaker
51	W —35181A	Suppressor 20,000 Ohm
52	G28—24628	Transformer, Output
53	—38425	Volume Control, 1 Megohm
54	G8 —32769	Power Transformer
55	G7 —38000	Vibrator, (D. A. Corp. No. 5041245)
	C —38407	Case
	C —38408	Case Top Cover
	C —38409A	Case Bottom Cover
	W —32947	Trimmer Hole Plug
	W —38412A	Oval Head Cover Nut
	W —32921	Cover Tie Bolt
	MG8—38410	Syncronode Partition Assem.
	W —32956	Mounting Stud
	W —38455	Case Spacer
	W —32957	Lock Washer
	—6213	Hex. Nut
	—38472	Remote Control Head Assm.
	G4 —38310	Control Cable to Var. Cond.
	G5 —38310	Control Cable to Vol. Cont.
	G13—32750	"A" Lead to Set.
	G14—32750	"A" Lead, Fused
	G9 —23472	Knob (2)
	W —38325A	Under Instr. Panel Mtg. Kit
	W —38336A	Steering Column Mtg. Kit.

CROSLEY RADIO CORP.

MODEL A-266
Schematic, Sock
Trimmers, Chass
Voltage

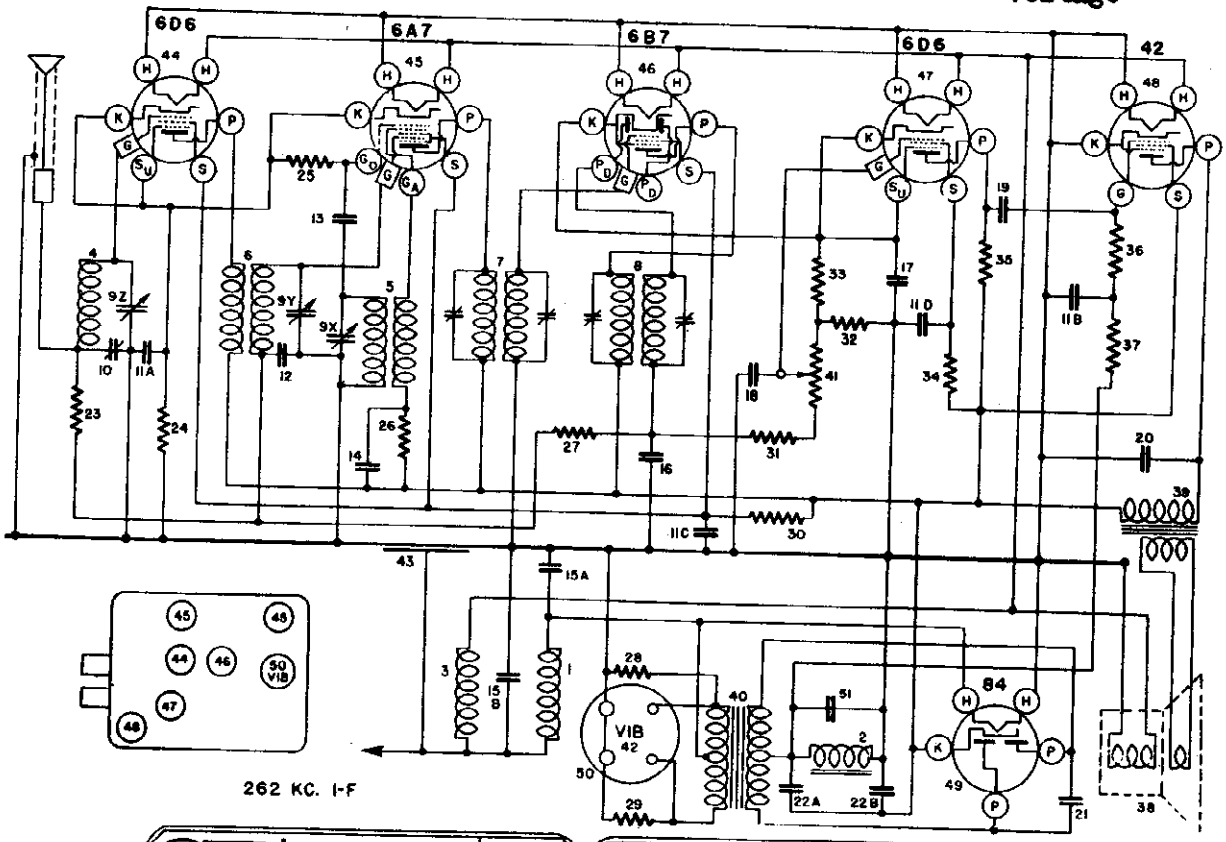

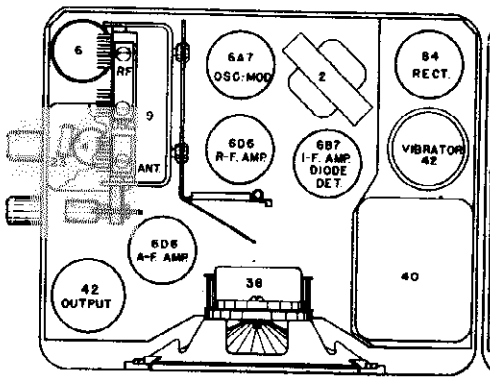

Fig. 2. Top View A-266

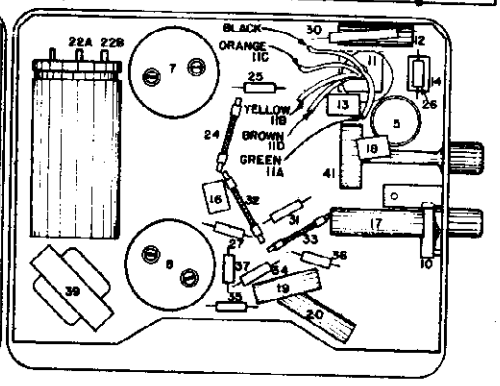

Fig. 3. Bottom View A-266

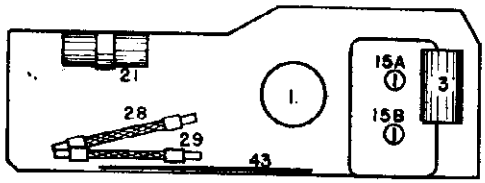

Fig. 4. Bottom View Power Supply Unit A-266

MAY, 1936

TUBE SOCKET VOLTAGE READINGS

Tube	Function	H	P	P2	S	G	K	Su	Ga	Ge
6D6	R-F Amplifier	6.0	240	—	80	0	5.5	—	—	—
6A7	Osc.-Mod.	6.0	240	—	80	0	5.5	—	165	0 to -30
6B7	I-F, Diode Det. & AVC	6.0	240	—	80	0	3.5	—	—	—
6D6	1st A-F Amplifier	6.0	50	—	35	1.5	3.5	3.5	—	—
42	Output	6.0	220	—	230	-7*	0	—	—	—
84	Rectifier	6.0	240	240	—	—	—	—	—	—

Power Output Approximately 3 Watts.
Battery Drain Approximately 7.0 Amperes at 6 volts.
*True Bias Reading Approximately —15 Volts Measured Across Filter Choke.

©John F. Rider, Publisher

SPECIFICATIONS

The Crosley Model A-266 auto radio is a single unit, six-tube superheterodyne receiver. The power supply unit is built into a completely shielded compartment and is an integral part of the receiver chassis.

TUBES AND VOLTAGE LIMITS

The following table gives the functions of the tubes used, together with the voltage readings between the tube socket contacts and the receiver chassis. Voltage readings should be taken with a 1000 ohm per volt, 250 volt voltmeter (except filaments) with receiver in operating condition and no signal input. The filament voltages should be measured with an accurate low range D-C voltmeter (approximately 0 to 10 volts). Voltage limits may vary plus or minus 10% of values given.

ALIGNMENT PROCEDURE

All the circuits in this receiver are very accurately adjusted at the factory and normally should need no further adjustment. However, if it is definitely known that an adjustment is necessary the circuits can best be properly aligned with the use of a modulated signal generator and an output meter.

CONNECTING OUTPUT METER

Connect one terminal of the output meter to the plate and the other terminal to the screen of the 42 Output tube. Be sure the meter is protected from D. C. by connecting a condenser (.1 mfd. or larger—not electrolytic) in series with one of the leads.

NOTE: The receiver chassis must be in its case and a speaker similar to one used with the receiver must be connected to the chassis before making any adjustments. It is also advisable to use a spare control unit for making adjustments of the volume control and tuning condenser. A standard control unit with short cables (6" to 8") makes a very convenient and useful tool. If it is desired to shorten a pair of long cables it will be absolutely necessary to heavily tin the cables before cutting them.

1. Tuning I-F Amplifier To 262 Kilocycles.

(a) Connect the output of the signal generator through a .02 mfd., or larger, condenser to the top cap of the 6A7 Osc-Mod. tube, leaving the tube's grid clip in place. Connect the ground lead from the signal generator to the receiver chassis frame. KEEP THE GENERATOR LEADS AS FAR AS POSSIBLE FROM THE GRID LEADS OF THE OTHER SCREEN GRID TUBES.

(b) Adjust the station selector so that the rotor plates of the tuning condenser are completely in mesh.

(c) Turn the volume control of the receiver full on and turn the tone control to the treble position.

(d) Set the signal generator to 262 kilocycles.

(e) Adjust both trimmers located on the 2nd I-F transformer for maximum output. (Fig. 2).

(f) Adjust both trimmers located on the 1st I-F transformer for maximum output.

(g) Repeat operations (e) and (f) for more accurate adjustments.

ALWAYS USE THE LOWEST SIGNAL GENERATOR OUTPUT THAT WILL GIVE A REASONABLE OUTPUT METER READING.

2. Aligning R.F Amplifier.

(a) Connect the output lead from the signal generator through a .00025 mfd. condenser to the "ANT" connection of the receiver.

(b) Set the signal generator to 1400 kilocycles.

(c) Adjust the station selector to 140 on the dial.

(d) Adjust the trimmer on the "OSC" section of the tuning condenser for maximum output.

(e) Adjust the trimmer on the "R-F" section of the tuning condenser for maximum output.

(f) Adjust the trimmer on the "ANT" section of the tuning condenser for maximum output.

(g) Readjust the station selector for maximum output. DO NOT READJUST THE OSC. TRIMMER.

(h) Repeat operations (e) and (f) for more accurate adjustments.

3. Adjusting Antenna Compensating Condenser.

(a) Set the signal generator to 600 kilocycles.

(b) Tune in the 600 kilocycle signal with the station selector for maximum output.

(c) Adjust the antenna compensating condenser, Illustration No. 10, Fig. 3, for maximum output.

(d) Repeat operations (b) and (c) alternately until no further improvement can be obtained.

(e) Set the signal generator to 1400 kilocycles again.

(f) Tune-in the 1400 kilocycle signal with the station selector for maximum output.

(g) Readjust the trimmer on the "ANT" section of the tuning condenser for maximum output.

It will be necessary to adjust the antenna compensating condenser to the car antenna after the receiver has been installed in the car.

(a) After the installation is complete, tune-in a WEAK station between 55 and 65 on the dial.

(b) Adjust the antenna compensating condenser for maximum volume in the speaker.

PARTS LIST—MODEL A-266

Figures in first column refer to parts in Diagrams.

Item No.	Part No.	Description
1	G16 —28067	"A" Filter Choke
2	G46 —24628	"B" Filter Choke
3	G13 —32977	Motor Noise Choke
4	G83 —32000	Ant. Coil
5	G27 —32002	Osc. Coil
6	G73 —32001	R-F Coil
7	G28 —32005	1st I-F Coil Assembly
8	G29 —32005	2nd I-F Coil Assembly
9	G51 —33002	3 Section Var. Tuning Condenser
10	W —38350	Ant. Compensating Condenser
11A	W —37021	.1 Mfd. 160 V. (Condenser Block)
11B		.1 Mfd. 160 V.
11C		.05 Mfd. 160 V.
11D		.05 Mfd. 160 V.
12	W —28621	Condenser .02 Mfd. 200 V.
13	G1 —34002	Condenser .00025 Mfd. (Molded)
14	G1 —34002	Condenser .00025 Mfd. (Molded)
15A	W —38787	Condenser (.5 Mfd. 160 V.
15B		.5 Mfd. 160 V.)
16	G3 —34002	Condenser .0005 Mfd. (Molded)
17	W —24029C	Condenser .1 Mfd. 200 V.
18	G2 —34002	Condenser .0001 Mfd. (Molded)
19	W —28621	Condenser .02 Mfd. 200 V.
20	W —34647	Condenser .006 Mfd. 400 V.
21	W —32762	Condenser .005 Mfd. 1000 V.
22A	W —38786	Electrolytic (6. Mfd. 350 V.
22B		6. Mfd. 350 V.)
23	—35601	Resistor 300,000 Ohm ¼W. Insulated
24	W —22514	Resistor 750 Ohm ½W. Flexible
25	—35928	Resistor 60,000 Ohm ¼W. Insulated
26	—36760	Resistor 20,000 Ohm ¼W. Insulated
27	—35602	Resistor 1 Megohm ¼W. Insulated
28	W —27504	Resistor 100 Ohm ½W. Flexible
29	W —27504	Resistor 100 Ohm ½W. Flexible
30	—38624	Resistor 55,000 Ohm 1W. Insulated
31	—36760	Resistor 20,000 Ohm ¼W. Insulated
32	W —30127	Resistor 450 Ohm ½W. Flexible
33	W —28589	Resistor 350 Ohm ½W. Flexible
34	—38623	Resistor 750,000 Ohm ¼W. Insulated
35	—35929	Resistor 150,000 Ohm ¼W. Insulated
36	—36322	Resistor 500,000 Ohm ¼W. Insulated
37	—35601	Resistor 300,000 Ohm ¼W. Insulated
38	—339-BS-3	Speaker "M", Spec. 1-D-370
	—41374	Speaker Cone Assembly (Above Speaker)
	—41373	Speaker Field Coil (Above Speaker)
39	G45 —24628	Transformer—Output
40	—38737	Transformer—Power
41	—38785	Volume Control (300,000 Ohm)
42	G6 —38000	Vibrator
43	W —38618	M. N. Cond. Plate Rivited to Chassis
44	G75 —28807	Socket Type—6D6
45	G47 —28807	Socket Type—6A7
46	G48 —28807	Socket Type—6B7
47	G75 —28807	Socket Type—6D6
48	G25 —28807	Socket Type—42
49	G45 —28807	Socket Type—84
50	G1 —28807	Socket Type—V1B
51	W —24049C	Condenser .1 Mfd. 200 V.
		Misc. Assembly Parts
	W —32360C	Tube Shield Base
	W —31210	Tube Shield Rin
	W —31212	Tube Shield—Short (Plain)
	W —31213	Tube Shield—Short (Cut out)
	W —34174	Tube Shield—Long (Plain)
	W —34175	Tube Shield—Long (Cut out)
	W —38341A	Vib. Ground Spring Clip
	W —30802A	R-F Coil Shield
	W —38588	Ant. Coil Shield
	W —32913	Wood Spacer (Ant. Coil)
	G22 —32750	"A" Lead (In Chassis)
	W —31303A	Ant. Bushing & Ferrule Assembly
	W —31302	Ant. Body
	W —38615A	Vib. Grd. Clip
	MG2 —38764	Bottom Cover
	C —38606	Top Cover
	W —32946	Cable Set Screw
	W —38412A	Oval Head Cover Nut
		Mounting Parts
	W —32956A	Mounting Stud
	— 6213	Mounting Stud Nut
	W —32957	Shake Proof Washer
	W —38455	Case Spacer
	—32783A	Ant Lead Assembly
	W —38038D	Distributor Suppressor
	W —29754C	Generator Condenser

©John F. Rider, Publisher

CROSLEY RADIO CORP.

MODEL A-366
Schematic
Socket, Parts

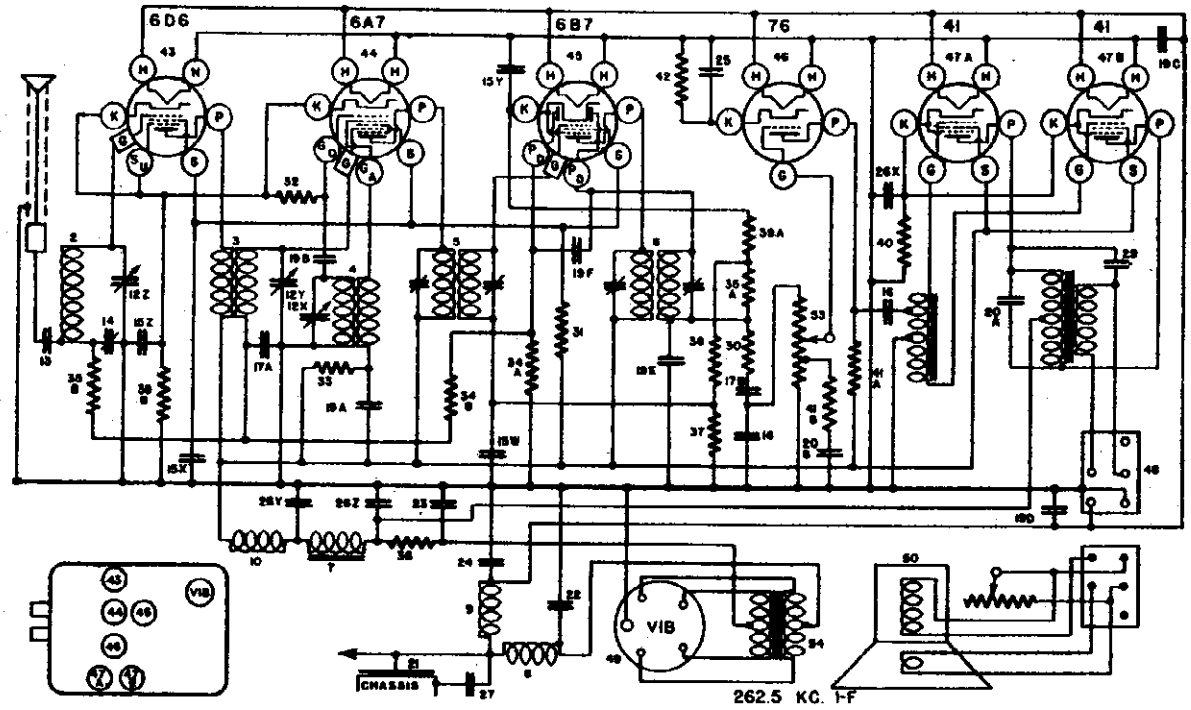

PARTS LIST—MODEL A-366

MAY, 1936

Figures in first column refer to parts in Diagrams.

Item No.	Part No.	Description
2	G83 —32000	Ant. Coil
	W —38420	Ant. Coil Shield
3	G20 —32001	R-F Coil
4	G27 —32002	Osc. Coil
5	G16 —32005	1st I-F Assembly
6	G30 —32005	2nd I-F Assembly
7	G31 —24628	"B" Filter Choke
8	G15 —28067	"A" Filter Choke
9	G6 —32977	Motor Noise Choke
10	G5 —32977	R-F "B" Choke
11	G50 —24628	A-F Grid Choke
12	G44 —33002	3 Section Var. Tuning Condenser
13	W —38367	Condenser .02 Mfd. 200 V.
14	W —38350	Condenser, Ant. Compensating
15Z, 15Y, 15X, 15W	W —38419A	Condenser {.05 Mfd. 400 V. .1 Mfd. 200 V. .05 Mfd. 400 V. .1 Mfd. 200 V.}
16	W —22688	Condenser .1 Mfd. 400 V.
17A	W —28621	Condenser .02 Mfd. 200 V.
17B	W —28621	Condenser .02 Mfd. 200 V.
18	G2 —34002	Condenser .0001 Mfd. (Molded)
19A to 19F	G1 —34002	Condenser .00025 Mfd. (Molded)
20A	W —25125	Condenser .003 Mfd. 400 V.
20B	W —25435	Condenser .003 Mfd. 400 V.
21	W —32904	Condenser, Riveted Plate to Chassis
22	W —38433	Condenser .5 Mfd. 160 V.
23	W —38431	Condenser .15 Mfd. 400 V.
24	W —37190	Condenser .02 Mfd. 160 V.
25	W —38430	Condenser 4. Mfd. 10 V. Electrolytic
26Z, 26Y, 26X	W —38427	Condenser 8. Mfd. 350 V. Condenser 8. Mfd. 350 V. Condenser 12. Mfd. 25 V. } Electrolytic
27	W —29910A	Condenser .25 Mfd. 200 V.
28	NONE	
29	W —38488	Condenser .05 Mfd. 400 V.
30	—35600	Resistor 100,000 Ohm ½W. Insulated
31	—35602	Resistor 30,000 Ohm ½W. Insulated
32	—35628	Resistor 60,000 Ohm ½W. Insulated
33	—35610	Resistor 20,000 Ohm ½W. Insulated
34A	—35602	Resistor 1 Megohm ½W. Insulated
34B	—35602	Resistor 1 Megohm ½W. Insulated
35A	—35601	Resistor 300,000 Ohm ½W. Insulated
35B	—35601	Resistor 300, 000 Ohm ½W. Insulated
36	W —32981	Resistor 100 Ohm 3W. Flexible
37	W —21452	Resistor 1100 Ohm ½W. Flexible
38	W —28589	Resistor 350 Ohm ½W. Flexible
39A	W —30127	Resistor 450 Ohm ½W. Flexible
39B	W —30127	Resistor 450 Ohm ½W. Flexible
40	W —26049	Resistor 450 Ohm 3W. Flexible
41A	W —36761	Resistor 40,000 Ohm ½W. Insul
41B	W —36761	Resistor 40,000 Ohm ½W. Insul
42	—38428	Resistor 4,500 Ohm ½W. Insul
43	G75 —28807	Socket Type 6D6
44	G47 —28807	Socket Type 6A7
45	G48 —28807	Socket Type 6B7
46	G80 —28807	Socket Type 76
47A	G22 —28807	Socket Type 41
47B	G22 —28807	Socket Type 41
	W —32360A	Tube Shield Base
	W —31212	Tube Shield Type 76 (Cut out)
	W —31213	Tube Shield Type 76 (Plain)
	W —34174	Tube Shield Type 6D6 (Cut out)
	W —34175	Tube Shield Type 6D6 (Plain)
	W —31210	Tube Shield Ring
48	W —32895	Speaker Socket
49	W —32965A	Vibrator Socket
50		Speakers (See Below)
51	NONE	
52	G51 —24628	Output Transformer
53	—38840	Volume Control (1 Meg.)
54	G8 —32769	Power Transformer
55	G7 —38000	Vibrator
	W —38413	Vibrator Ground Clip
	W —35181A	Distributor Suppressor
	W —32956A	Suppressor Adapter
	W —29754C	Generator Condenser
	—32783A	Antenna Lead
	C —38407	Case
	C —38408	Top Cover
	MG2 —38798	Bottom Cover
	W —32946	Cable Set Screw
	W —32947	Comp. Cond Hole Plug
	W —38412B	Oval Head Nut, Cover Mtg.
	W —32921	Cover Tie Bolt
	W —32956	Mounting Stud
	W —38456	Case Mtg. Spacer
W	—32957	Lock Washer
	— 6213	Hex. Nut
		Speaker Parts
	—424-G-6	Speaker Complete (under cowl) "M" Spec. 1-D-399
	—40311	Knob (Tone Control)
	—38824A	Tone Control (300,000 Ohm)
	—40448	Grille & Screen (424-G-6)
	—40461	Baffle Gasket (424-G-6)
	—40303	Speaker Unit only (424-G-6)
	—40301	Speaker Cone Assembly (424-G-6)
	—40306	Speaker Field Coil (424-G-6)
	—32974	Plug
	—32975	Plug Cover
	—38847	Cable
	—424-G-4	Speaker Complete (under cowl) "M" Spec. 1-D-398
	—40311	Knob (Switch)
	—40554	Switch
	—40556	Candohm Resistor
	—32895	Loader Socket
	—40561	Choke
W	—37849	Cable
	—40448	Grille & Screen (424-G-4)
	—40461	Baffle Gasket (424-G-4)
	40562	Speaker Unit only (424-G-4)
	—40301	Speaker Cone Assembly (424-G-4)
	—40305	Speaker Field Coil (424-G-4)
	—32974	Plug
	—32975	Plug Cover
	—324-G-5	Speaker Assembly (Headline) "M" Spec. 1-D-396
W	—35252A	Tone Control Knob
	—38852	Tone Control
	—38839	Speaker Unit (324-G-5)
	—40402	Speaker Cone Assembly (324-G-5)
	—40297	Speaker Field coil (324-G-5)
	—321-G-6	Speaker Assembly (Header) "M" Spec. 1-D-397
W	—41439	Grille & Screen (324-G-6)
W	—40360	Baffle Gasket (324-G-6)
W	—40257	Speaker Clamp (324-G-6)
W	—35252A	Tone Control Knob
	—38824A	Tone Control
B	—35250	Mtg. Bracket (324-G-6)
	—38820	Speaker Unit (324-G-6)
	—40402	Speaker Cone Assembly (324-G-6)
	—40297	Speaker Field Coil (324-G-6)

©John F. Rider, Publisher

ALIGNMENT PROCEDURE

All the circuits in this receiver are very accurately adjusted at the factory and normally should need no further adjustment. However, if it is definitely known that an adjustment is necessary the circuits can best be properly aligned with the use of a modulated signal generator and an output meter.

CONNECTING OUTPUT METER

Connect one terminal of the output meter to the plate and the other terminal to the screen of the 42 Output tube. Be sure the meter is protected from D. C. by connecting a condenser (.1 mfd. or larger—not electrolytic) in series with one of the leads.

NOTE: The receiver chassis must be in its case and a speaker similar to one used with the receiver must be connected to the chassis before making any adjustments. It is also advisable to use a spare control unit for making adjustments of the volume control and tuning condenser. A standard control unit with short cables (6" to 8") makes a very convenient and useful tool. If it is desired to shorten a pair of long cables it will be absolutely necessary to heavily tin the cables before cutting them.

1. Tuning I-F Amplifier To 262 Kilocycles.

(a) Connect the output of the signal generator through a .02 mfd., or larger, condenser to the top cap of the 6A7 Osc-Mod. tube, leaving the tube's grid clip in place. Connect the ground lead from the signal generator to the receiver chassis frame. KEEP THE GENERATOR LEADS AS FAR AS POSSIBLE FROM THE GRID LEADS OF THE OTHER SCREEN GRID TUBES.

(b) Adjust the station selector so that the rotor plates of the tuning condenser are completely in mesh.

(c) Turn the volume control of the receiver full on and turn the tone control to the treble position.

(d) Set the signal generator to 262 kilocycles.

(e) Adjust both trimmers located on the 2nd I-F transformer for maximum output. (Fig. 2)

(f) Adjust both trimmers located on the 1st I-F transformer for maximum output.

(g) Repeat operations (e) and (f) for more accurate adjustments.

ALWAYS USE THE LOWEST SIGNAL GENERATOR OUTPUT THAT WILL GIVE A REASONABLE OUTPUT METER READING.

2. Aligning R.F Amplifier.

(a) Connect the output lead from the signal generator through a .00025 mfd. condenser to the "ANT" connection of the receiver.

(b) Set the signal generator to 1400 kilocycles.

(c) Adjust the station selector to 140 on the dial.

(d) Adjust the trimmer on the "OSC" section of the tuning condenser for maximum output.

(e) Adjust the trimmer on the "R-F" section of the tuning condenser for maximum output.

(f) Adjust the trimmer on the "ANT" section of the tuning condenser for maximum output.

(g) Readjust the station selector for maximum output. DO NOT READJUST THE OSC. TRIMMER.

(h) Repeat operations (e) and (f) for more accurate adjustments.

3. Adjusting Antenna Compensating Condenser.

(a) Set the signal generator to 600 kilocycles.

(b) Tune in the 600 kilocycle signal with the station selector for maximum output.

(c) Adjust the antenna compensating condenser, Illustration No. 14, Fig. 3, for maximum output.

(d) Repeat operations (b) and (c) alternately until no further improvement can be obtained.

(e) Set the signal generator to 1400 kilocycles again.

(f) Tune-in the 1400 kilocycle signal with the station selector for maximum output.

(g) Readjust the trimmer on the "ANT" section of the tuning condenser for maximum output.

It will be necessary to adjust the antenna compensating condenser to the car antenna after the receiver has been installed in the car.

(a) After the installation is complete, tune-in a WEAK station between 55 and 65 on the dial.

(b) Adjust the antenna compensating condenser for maximum volume in the speaker.

TUBES AND VOLTAGE LIMITS

The following table gives the functions of the tubes used, together with the voltage readings between the tube socket contacts and the receiver chassis. Voltage readings should be taken with a 1000 ohm per volt, 250 volt voltmeter (except filaments) with receiver in operating condition and no signal input. Voltage limits may vary plus or minus 10% of voltages given.

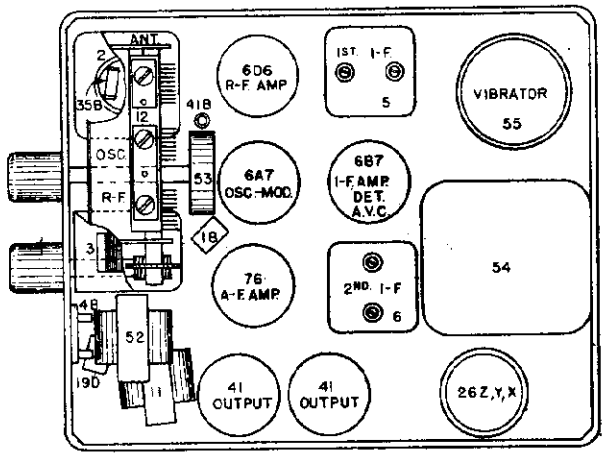

Fig. 2. Top View

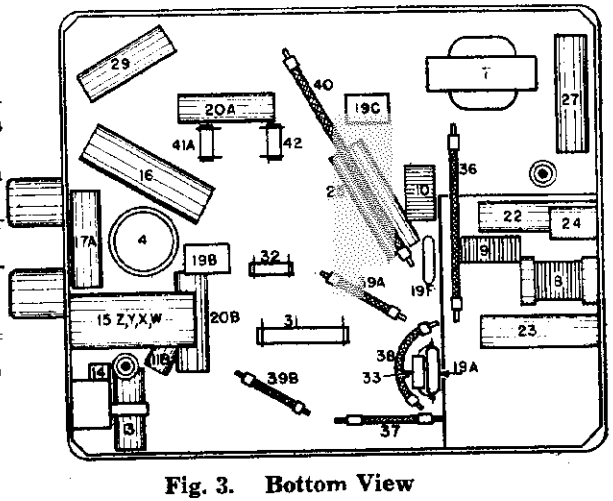

Fig. 3. Bottom View

TUBE SOCKET VOLTAGE READINGS

Tube	Function	H	P	S	G	K	Ga	Go
6D6	R-F Amplifier	6.0	220	100	0	5.7	—	—
6A7	Osc.-Mod.	6.0	220	100	0	5.7	130	-5 to -10
6B7	I-F Amp. & Diode Detector	6.0	220	100	0	6.8	—	—
76	1st A-F Amp.	6.0	130	—	0	8.0	—	—
41	(2) Output	6.0	210	—	0	18.0	—	—

Power Output Approximately 3 Watts.
Battery Drain Approximately 6.2 Amperes at 6 Volts.

©John F. Rider, Publisher

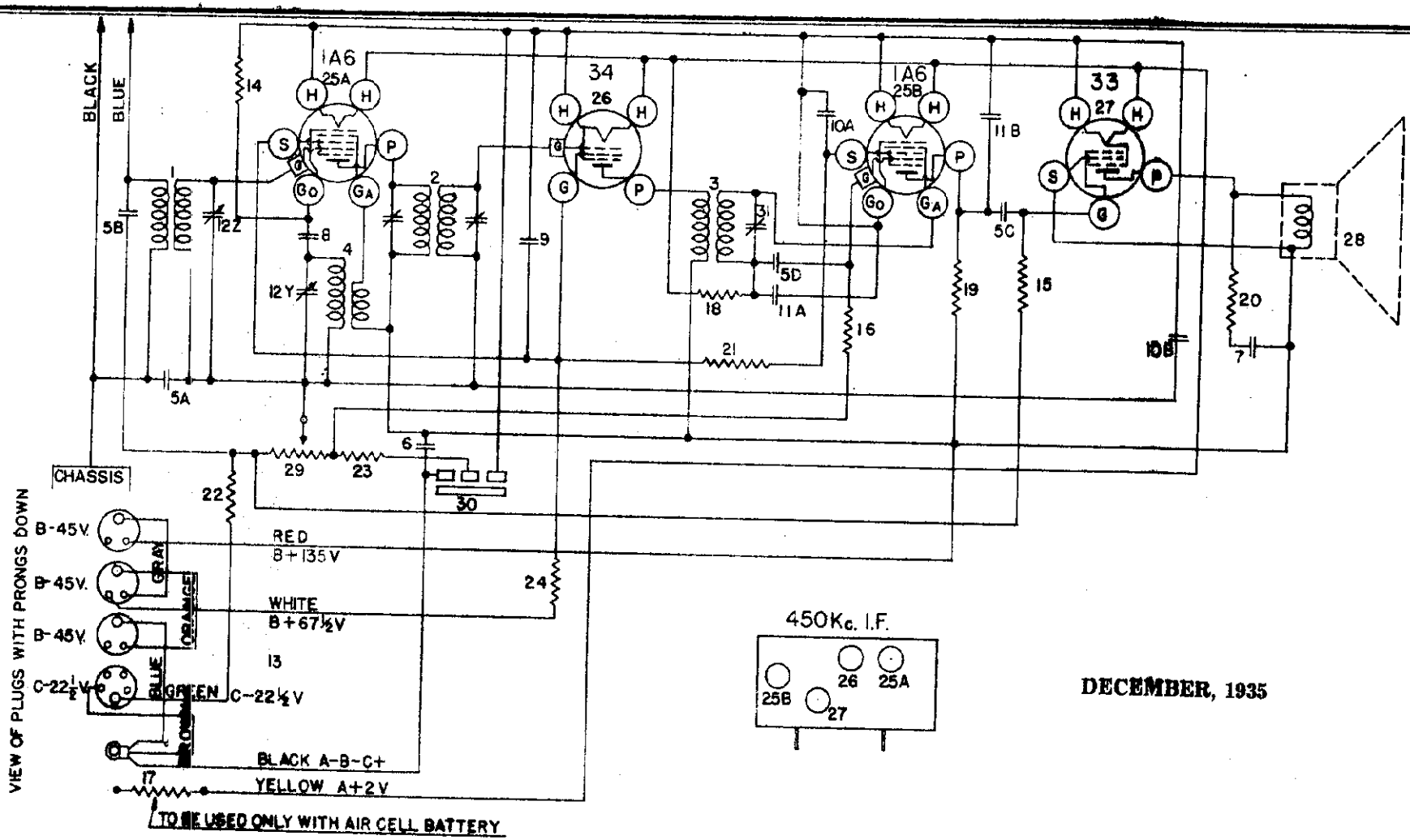

DECEMBER, 1935

TUBE SOCKET VOLTAGE READINGS

Tube	Function	H	P	S	G
1A6	Oscillator-Modulator	2.0	135	63	0
34	I-F Amplifier	2.0	135	63	0
1A6	Detector & A-F Amp.	2.0	40	25	0
33	Output	2.0	130	135	0

"A" Battery Drain Approximately .44 Ampere.
"B" Battery Drain Approximately 20 Mils.

Power Output Approximately .7 Watt.

SPECIFICATIONS

The Crosley Model 415 radio is a four-tube superheterodyne receiver designed for operation from batteries. The method of connecting the battery cable to the batteries is shown on the Wiring Diagram. The batteries required are: one two-volt storage battery or an air cell battery, three "plug-in type" 45 volt "B" batteries and one "plug-in type" 22½ volt "C" battery.

TUBES AND VOLTAGE LIMITS

The following table gives the functions of the tubes used, together with the voltage readings between the tube socket contacts and B—. Voltage readings should be taken with a 1000 ohm per volt, 250 volt voltmeter (except filaments) with receiver in operating condition and no signal input. The filament voltages should be measured with an accurate low range D-C voltmeter (approximately 0-10 volts). Voltage limits may vary plus or minus 10% of values given.

ALIGNMENT PROCEDURE

All the circuits in this receiver are very accurately adjusted at the factory and normally should need no further adjustment. However, if it is definitely known that an adjustment is necessary the circuits can be properly aligned ONLY with the use of a modulated signal generator and an output meter.

CONNECTING OUTPUT METER

Connect one terminal of the output meter to the plate and the other terminal to the screen of the 33 Output tube. Be sure the meter is protected from D.C. by connecting a condenser (.1 mfd. or larger—not electrolytic) in series with one of the leads.

1. Tuning I-F Amplifier To 450 Kilocycles.

(a) Connect the output of the signal generator through a .02 mfd. condenser to the top cap of the 1A6 Osc-Mod tube, leaving the tube's grid clip in place. Connect the ground lead from the signal generator to the ground wire (BLACK) at the rear of the chassis. KEEP THE GENERATOR LEADS AS FAR AS POSSIBLE FROM THE GRID LEADS OF THE OTHER SCREEN GRID TUBES.

(b) Set the tuning condenser so that the plates are completely out of mesh and turn the volume control to the right (ON).

(c) Set the signal generator to 450 kilocycles.

(d) Adjust the trimmer condenser for the 2nd I-F transformer, Fig. 3, Illustration No. 31, for maximum output.

(e) Adjust both trimmer condensers, located on top of the 1st I-F transformer, for maximum output.

(f) Check operations (d) and (e) for more accurate adjustments.

ALWAYS USE THE LOWEST SIGNAL GENERATOR OUTPUT THAT WILL GIVE A REASONABLE OUTPUT METER READING.

2. Aligning R-F Amplifier.

(a) Connect the output lead from the signal generator through a .00025 mfd. condenser to the antenna wire (BLUE) at the rear of the chassis.

(b) Set the signal generator to 1400 kilocycles.

(c) Place the chassis in the cabinet and adjust the station selector to 140 on the dial.

(d) Remove the chassis from the cabinet and adjust the "OSC" trimmer, 12Y, located on the tuning condenser, for maximum output. (Fig. 2).

(e) Adjust the "ANT" trimmer, 12Z, located on the tuning condenser, for maximum output.

(f) Tune-in the generator signal with the station selector for maximum output.

(g) Repeat operation (e) for more accurate adjustment.

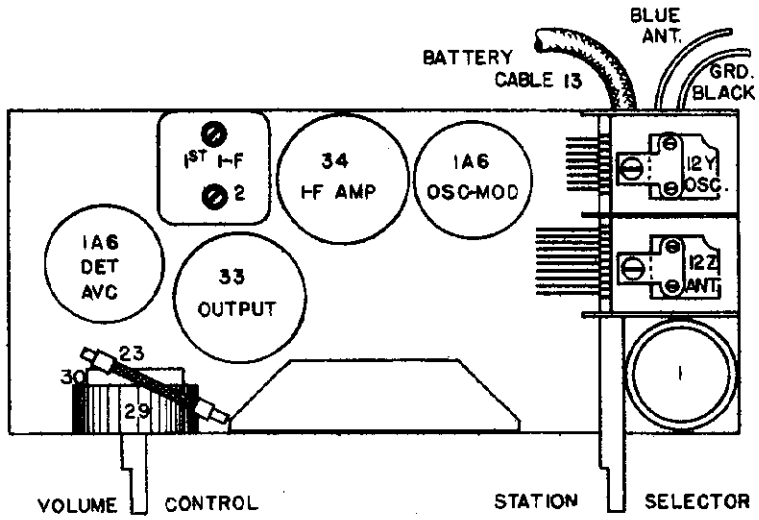

Fig. 2. Top View

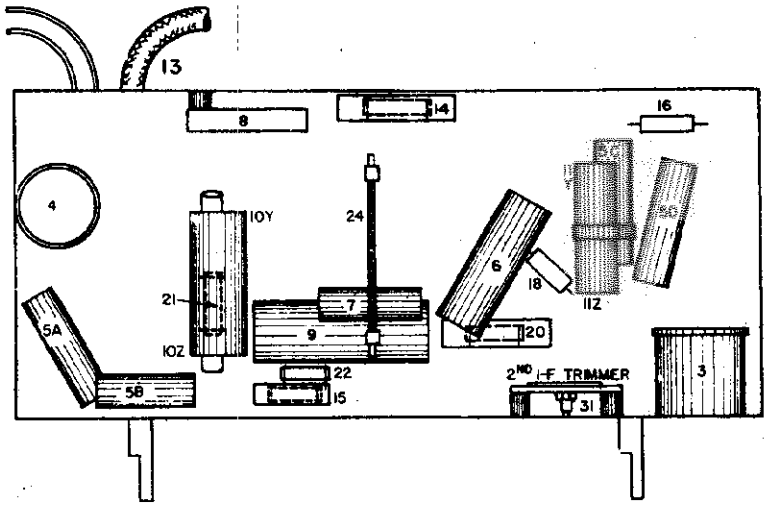

Fig. 3. Bottom View

PARTS LIST—MODEL 415

Figures in first column refer to parts in Diagrams.

Item No.	Part No.	Description
1	G27—32000	Ant Coil
	W —30802A	Coil Shield
	W —30028A	Retaining Ring
2	G9 —32004	1st I-F Coil—only
	W —25025B	Coil Shield
	W —26891	Insulating Washer
	W —21541C	Retaining Ring
	W —25200A	Coil Socket
3	G13—32004	2nd I-F Coil Asem.
4	G9 —32002	Osc. Coil
	W —25025B	Coil Shield
	W —26891	Insulating Washer
	W —21541C	Retaining Ring
	W —25200A	Coil Socket
5A	W —28821	Condenser 0.02 Mfd. 200 V.
5B	W —28821	Condenser 0.02 Mfd. 200 V.
5C	W —28821	Condenser 0.02 Mfd. 200 V.
5D	W —28821	Condenser 0.02 Mfd. 200 V.
6	W —29910A	Condenser 0.25 Mfd. 200 V.
7	W —28819	Condenser 0.006 Mfd. 200 V.
8	W —5382	Condenser 0.00025 Mfd.
9	W —30821A	Condenser 1.0 Mfd. 160 V.
10A	W —28822	Condenser 0.1 Mfd. 200 V.
10B	W —28822	Condenser 0.1 Mfd. 200 V.
11A	W —25572	Condenser 0.0005 Mfd. 400 V.
11B	W —25572	Condenser 0.0005 Mfd. 400 V.
12Z, 12Y	G6 —33001	2 Section Tuning Condenser Gang

Item No.	Part No.	Description
13	C —36726C	Battery Cable Asem.
14	—21875	Resistor 100,000 Ohm ½ W.
15	—21454	Resistor 1.0 Megohm ½ W.
16	—26577	Resistor 3.3 Megohm ½ W.
17	G5 —23300	Resistor 0.6 Ohm
18	—23785	Resistor 30,000 Ohm ½ W.
19	—21455	Resistor 300,000 Ohm ½ W.
20	—24814	Resistor 7,000 Ohm ¾ W.
21	—24990	Resistor 25,000 Ohm ¾ W.
22	—27121	Resistor 5,000 Ohm ½ W.
23	W —23013	Resistor 2,000 Ohm ½ W. Flex.
24	W —21452	Resistor 1,100 Ohm ½ W. Flex.
25A	G55—27975	Socket 1A6
	W —33072	Socket Cushion
25B	G55—33070	Socket 1A6
26	G31—27975	Socket 34
27	G36—27975	Socket 33
28	—21M	Speaker
29, 30	W 33922A	Volume Control, On-Off Switch
31	G5 —33005	Condenser 1st I-F Trimmer
	D —33938	Cabinet
	W —31140	Escutcheon (V. C.)
	W —34050	Escutcheon (Dial)
	W —28760B	Escutcheon Pin (6)
	W —33939	Knob (2)

CROSLEY RADIO CORP.

MODEL
Schema
Socket
Voltage

DECEMBER, 1935

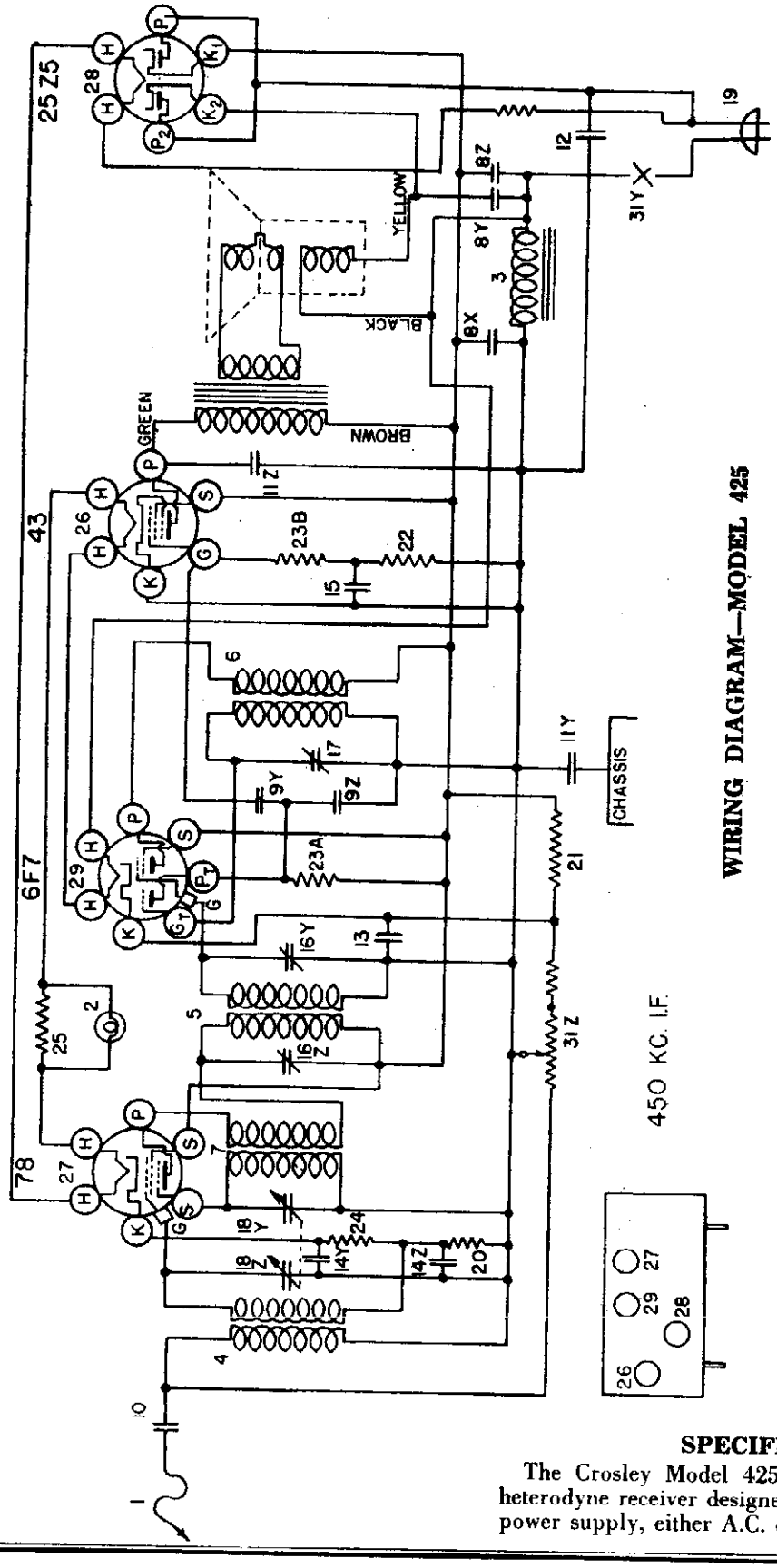

WIRING DIAGRAM—MODEL 425

TUBE SOCKET VOLTAGE READINGS

Tube	Function	H	P	S	G	G	Pt	Gt
78	Osc.-Mod.	6.5	105	105	17	20	—	0
6F7	I-F Amp. & Det.	6.5	105	105	0	3	35	—
43	Output	26.0	105	105	-20	0	—	—
25Z5	Rectifier	26.5	117.5	—	—	—	—	—

Power Demand Approximately 60 Watts on 117.5 V.-A.C. Power Supply.
Power Output Approximately .9 Watt.
Voltage Reading Approximately 10% lower on 120 V., D.C.

SPECIFICATIONS

The Crosley Model 425 radio is a four-tube superheterodyne receiver designed for operation on a 110 volt power supply, either A.C. or D.C.

©John F. Rider, Publisher

MODEL 425
Socket, Trimmers
Chassis, Parts
Alignment

CROSLEY RADIO CORP.

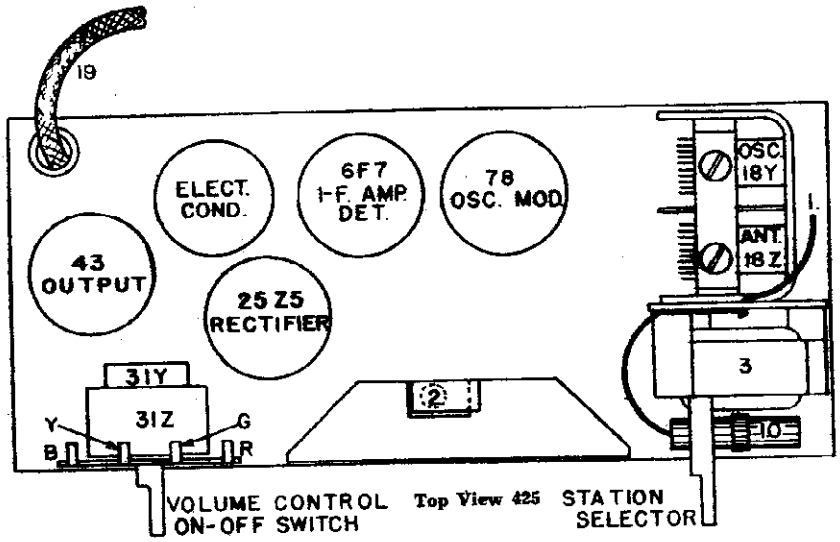

PUT METER READING.

2. Aligning R-F Amplifier.

(c) Connect the output lead from the signal generator through a .00025 mfd. condenser to the antenna condenser at the point where the antenna wire is connected.

(b) Set the signal generator to 1400 kilocycles.

(c) Place the chassis in the cabinet and adjust the station selector to 140 on the dial.

(d) Remove the chassis from the cabinet and adjust the "OSC" trimmer, located on the station selector condenser, for maximum output. (Fig. 2.)

(e) Adjust the "ANT" trimmer, located on the station selector condenser, for maximum output.

(f) Repeat operations (d) and (e) for more accurate adjustments.

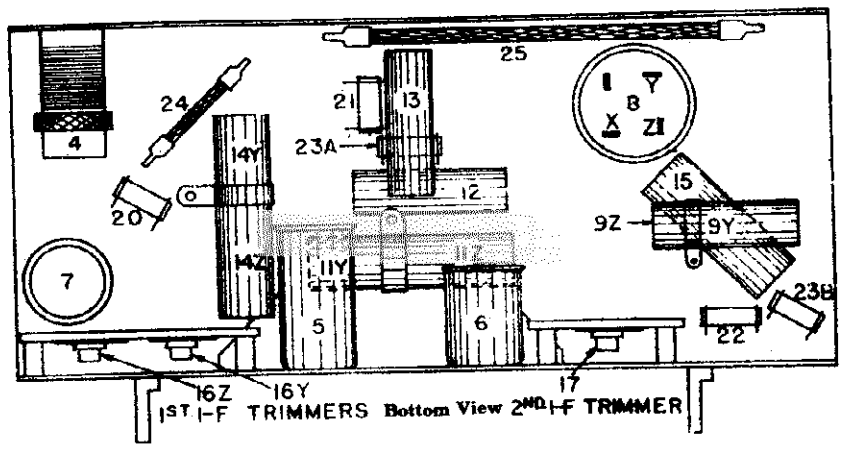

TOR LEADS AS FAR AS POSSIBLE FROM THE 6F7 TUBE.

(b) Set the station selector condenser so that the plates are completely out of mesh and turn the volume control to the right (ON).

(c) Set the signal generator to 450 kilocycles.

(d) Adjust the trimmer condenser for the 2nd I-F transformer, Fig. 3, Illustration No. 17, for maximum output.

(e) Adjust both trimmer condensers for the 1st I-F transformer, Fig. 3, Illustration Nos. 16Y and 16Z, for maximum output.

(f) Check operations (d) and (e) for more accurate adjustments.

ALWAYS USE THE LOWEST SIGNAL GENERATOR OUTPUT THAT WILL GIVE A REASONABLE OUT-

PARTS LIST—MODEL 425

Figures in first column refer to parts in Diagrams.

Item No.	Part No.	Description
1	W —29784-3	Antenna Roll
2	G2 —27812	Dial Light Socket Assem.
3	G1 —28859	Choke Assembly (filter)
4	G75—32000	Antenna Coil
5	G3 —32004	First I. F. Coil Only
	W —25024B	Coil Shield
	W —25200	Coil Socket
	W —26891	Insulating Washer
	W —21541	Retaining Ring
6	G11—32004	Second I. F. Coil Only
	W —25025B	Coil Shield
	W —25200	Coil Socket
	W —26891	Insulating Washer
	W —21541	Retaining Ring
7	G6 —32002	Oscillating Coil Only
	W —25025B	Coil Shield
	W —25200	Coil Socket
	W —26891	Insulating Washer
	W —21541	Retaining Ring
8Z		Condenser 16 Mfd. 125 V.
8Y	W —29804A	Condenser 8 Mfd. 125 V.
8X		Condenser 25 Mfd. 100 V.
9Z		Condenser 0.00017 Mfd. 200 V.
9Y	W —30332A	Condenser 0.006 Mfd. 200V.
10	W —30325	Condenser 0.003 Mfd. 200 V.
11Z	W —29285	Condenser 0.008 Mfd. 200 V.
11Y		Condenser 0.05 Mfd. 200 V.
12	W —30486	Condenser 0.02 Mfd. 400 V.
13	W —28621	Condenser 0.02 Mfd. 200V.
14Z	W —28623	Condenser 0.02 Mfd. 200V.
14Y		Condenser 0.02 Mfd. 200V.
15	W —29910A	Condenser 0.25 Mfd. 200 V.

Item No.	Part No.	Description
16Z	G11—33006	2 Section 1st I. F. Trimmer
16Y		
17	G5 —33005	1 Section 2nd I. F. Trimmer
18Z	G16—33001	2 Section Tuning Condenser Gang
18Y		
	W —36786A	Gang Insulator Cover
19	B —35350	Power Cord and Plug
20	—31093	Resistor 2700 Ohm ¼ W.
21	—24990	Resistor 25,000 Ohm ¼ W.
22	—21455	Resistor 300,000 Ohm ¼ W.
23A	—23785	Resistor 500,000 Ohm ¼ W.
23B	—23785	Resistor 500,000 Ohm ¼ W.
24	W —28589	Resistor 350 Ohm ½ W Flex.
25	W —30539	Resistor 26.7 Ohm 3. W Flex.
26	G30—28807	Socket 43
27	G39—28807	Socket 78
28	G51—28807	Socket 25Z5
29	G49—28807	Socket 6F7
30	—214BL9	Speaker
31Z	—36793	Volume Control
31Y		On-Off Switch
	D —36919A	Cabinet —SH
	W —36920A	Dial Plate
	W —36921A	V. C. Plate
	W —28760	Plate Pins (6)
	W —38922	Pointer (2)
	W —35352A	Knob (2)
	W —28723A	Bulls Eye
	W —29023	Bulls Eye Bezel
	W —33924	Chassis Foot (2) Spreader
	B —36806C	Mounting Plate (Back)

CONNECTING OUTPUT METER

Connect one terminal of the output meter to the plate and the other terminal to the screen of the 43 Output tube. Be sure the meter is protected from D.C. by connecting a condenser (.1 mfd. or larger—not electrolytic) in series with one of the leads.

1. Tuning I-F Amplifier To 450 Kilocycles.

(a) Connect the output of the signal generator through a .02 condenser to the top cap of the 78 tube, leaving the tube's grid clip in place. Connect the ground lead from the signal generator through a .05 mfd., or larger, condenser to the receiver chassis. KEEP THE GENERA-

CROSLEY RADIO CORP.

MODEL 43
Schemati
Voltage

SPECIFICATIONS

The Crosley Model 435 radio is a four-tube superheterodyne receiver designed for operation from a six-volt storage battery. It contains a completely shielded, built-in power supply unit which employs a self-rectifying type vibrator.

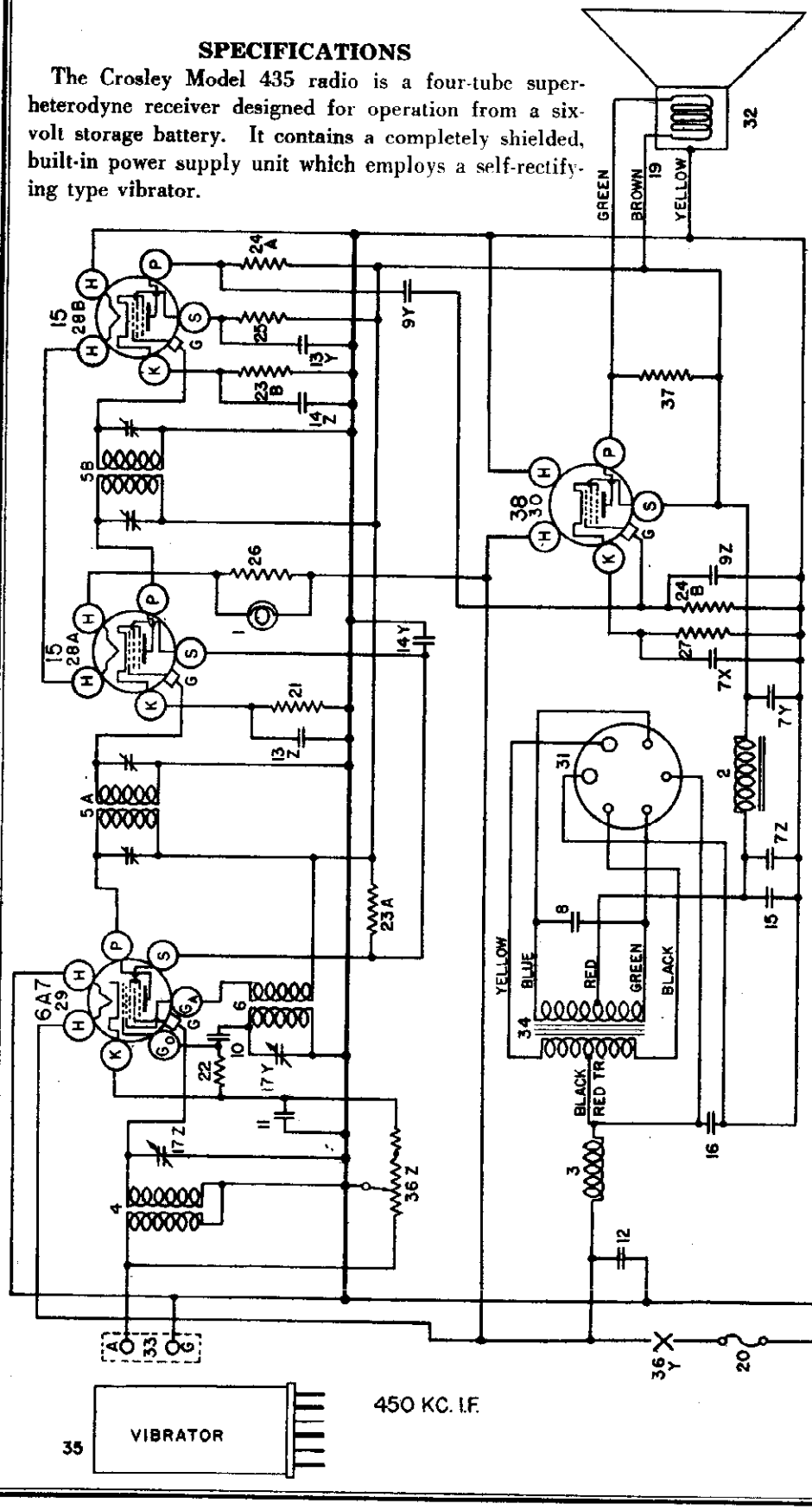

FIG. 1—WIRING DIAGRAM—MODEL 435

TUBE SOCKET VOLTAGE READINGS

Tube	Where Used	S	G	S	G	K	Ga	Ge
6A7	Osc.-Mod.	6.3	185	70	0	2.5	185	-10 to -20
15	I-F Amplifier	2.1	185	70	0	2.5	—	—
15	Detector	2.1	20	4	0	4.5	—	—
38	Output	6.3	170	185	0	11.0	—	—

POWER OUTPUT APPROXIMATELY 1 WATT.
"A" BATTERY DRAIN APPROXIMATELY 1.95 AMPERES AT 6 VOLTS.

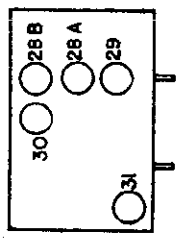

DECEMBER, 1935

©John F. Rider, Publisher

MODEL 455
Socket, Trimmers
Alignment, Parts

CROSLEY RADIO CORP.

Connect one terminal of the output meter to the plate and the other terminal to the screen of the 38 Output tube. Be sure the meter is protected from D.C. by connecting a condenser (.1 mfd. or larger—not electrolytic) in series with one of the leads.

1. Tuning I-F Amplifier to 450 Kilocycles.

(a) Connect the output of the signal generator through a .02 mfd. condenser to the top cap of the 6A7 tube, leaving the tube's grid clip in place. Connect the ground lead from the signal generator to the "Gnd" terminal of the receiver. KEEP THE GENERATOR LEADS AS FAR AS POSSIBLE FROM THE GRID LEADS OF THE OTHER SCREEN GRID TUBES.

(b) Adjust the station selector so that the plates of the condenser gang are completely out of mesh and turn the volume control to the right (ON).

(c) Set the signal generator to 450 kilocycles.

(d) Adjust both trimmers located on top of the 2nd. I-F Transformer for maximum output. (Fig. 2).

(e) Adjust both trimmers located on top of the 1st. I-F Transformer for maximum output.

ALWAYS USE THE LOWEST SIGNAL GENERATOR OUTPUT THAT WILL GIVE A REASONABLE OUTPUT METER READING.

2. Aligning R-F Amplifier.

(a) Connect the output lead from the signal generator through a .00025 mfd. condenser to the "ANT" terminal of the receiver.

(b) Set the signal generator to 1400 kilocycles.

(c) Adjust the station selector to 140 on the dial.

(d) Adjust the trimmer on the "OSC" section of the condenser gang for maximum output. (Fig. 3.)

(e) Adjust the trimmer on the "ANT" section of the condenser gang for maximum output.

(f) Repeat operations (d) and (e) for more accurate adjustments.

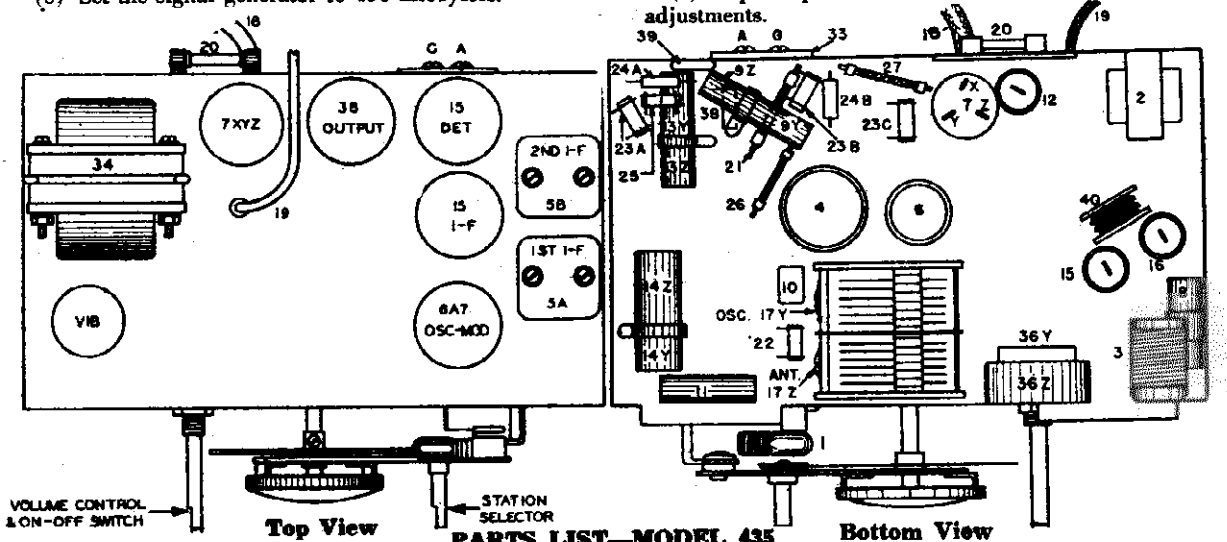

PARTS LIST—MODEL 435

Figures in first column refer to parts in Diagrams.

Item No.	Part No.	Description
1	G6 —27134	Dial Light Brkt. Assm.
2	G10—29535	Filter Choke 2.4 H.
3	G13—28067	"A" Filter Choke
4	G55—32000	Ant. Coil (only)
	W —30802A	Coil Shield
	W —30026A	Retaining Ring
5A	G70—32004	1st I. F. Coil Assm.
5B	G70—32004	2nd I. F. Coil Assm.
6	G9 —32002	Osc. Coil (only)
	W —25025B	Coil Shield
	W —26891	Insulating Washer
	W —21541C	Retaining Ring
	W —25200	Coil Socket
7Z, 7Y, 7X	W —34896	Condenser 12.0 Mfd. 250 V. / Condenser 8.0 Mfd. 250 V. / Condenser 8.0 Mfd. 25 V.
8	W —37214	Condenser 0.001 Mfd. 1,000 V.
9Z, 9Y	W —30322A	Condenser 0.00017 Mfd. 200 V. / Condenser 0.006 Mfd. 200 V.
10	G1 —34002	Condenser 0.00025 Mfd. (Mica)
11	W —28621	Condenser 0.02 Mfd. 200 V.
12	W —37190	Condenser 0.02 Mfd. 160 V.
13Z, 13Y	W —28623	Condenser 0.02 Mfd. 200 V. / Condenser 0.02 Mfd. 200 V.
14Z, 14Y	W —28622	Condenser 0.1 Mfd. 200 V. / Condenser 0.1 Mfd. 200 V.
15	W —37173	Condenser 0.25 Mfd. 300 V.
16	W —37174	Condenser 0.5 Mfd. 160 V.
17Z, 17Y	G14—33001	2 Section Tuning Cond. Gang.
	—36147B	Dial Drive Unit Assm.
	MG16—35757	Drive Mounting Brkt.
	W —36150A	Dial Face only
	—37158	Dial Glass
	—37156	Pointer
	—37157	Pointer Screw
18	B —34902	Battery Cable
	—34903	Battery Clip +
	—34904	Battery Clip —

Item No.	Part No.	Description
19	W —35111	Speaker Cable
20	G2 —33339	Fuse Panel
21	W —22514	Resistor 750 Ohm ½ W., Flex
22	—21453	Resistor 40,000 Ohm ¼ W.
23A	—21237A	Resistor 60,000 Ohm ¼ W.
23B	—21237A	Resistor 60,000 Ohm ¼ W.
23C	—21237A	Resistor 60,000 Ohm ¼ W.
24A	—35602	Resistor 1.0 Megohm ¼ W.
24B	—35602	Resistor 1.0 Megohm ¼ W.
25	—33490	Resistor 10.0 Megohm ¼ W.
26	W —37189	Resistor 12.75 Ohm ½ W., Flex.
27	W —21452	Resistor 1100. Ohm ¾ W., Flex.
28A	G88—28807	Socket 15
28B	G88—28807	Socket 15
29	G47—28807	Socket 6A7
30	G15—28807	Socket 38
31	G92—28807	Socket Vib.
	W —35772	Tube Shield (Half) (6)
	W —35773	Tube Shield Cap (3)
	W —35774	Shield Base (3)
32	33—MS—3U	Speaker
33	G1 —26719	Terminal Board Ant. & Grd.
34	G4 —31618	Power Transformer
35	W —37216	Vibrator
	W —37195	Vibrator Shield
	W —37217	Vibrator Side Packing
	W —37218	Vibrator Top Packing
	W —26973B	Shield Base
36Z, 36Y	—37187	Volume Control / On-Off Switch
37	—21453	Resistor 40,000 Ohm ¼ W.
38	—35600	Resistor 100,000 Ohm ¼ W.
39	G2 —34002	Condenser 0.0001 Mfd.
40	G1 —24234	R. F. Choke
	B —37172A	Syncronode Cover
	B —35917	Escutcheon
	D —28	Escutcheon Screws (3)
	W —31585B	Knob (2)
	W —7983A	Fuse, 3 Amp.

CROSLEY RADIO CORP.

MODEL 526, 552
Schematic
Voltage

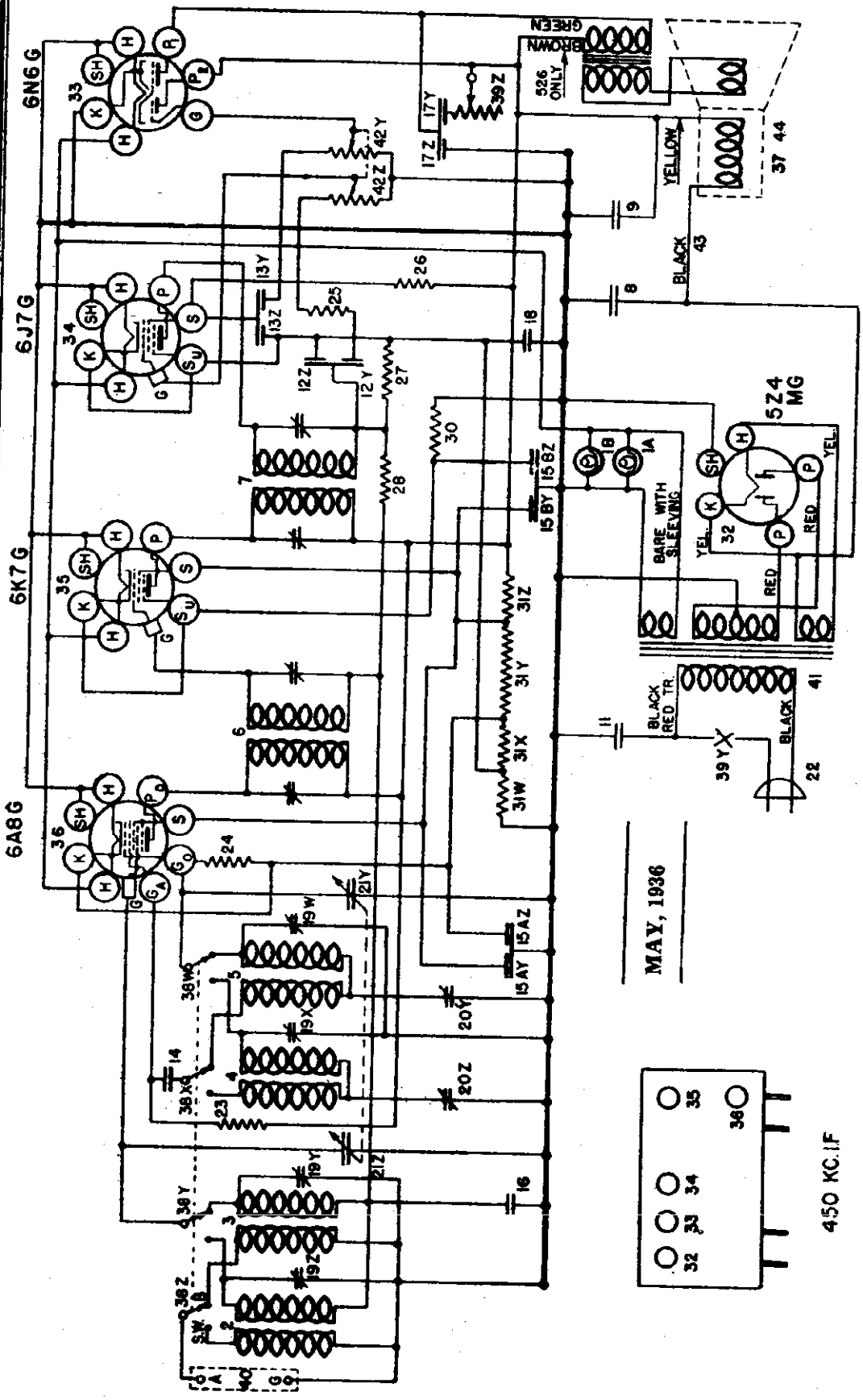

TUBE SOCKET VOLTAGE READINGS

Tube	Where Used	H	P	P_2	S	Su	G	K	Ga	Go
6A8-G	Osc.-Mod.	6.7	295		135	—	0	7.5	155	-10 to -20
6K7-G	I-F Amplifier	6.7	295	—	135	10	0	10	—	—
6J7-G	Det. & A-F Amp.	6.7	1.0	—	65	4	0	4	—	—
6N6-G	Output	6.7	285	295	—	—	—	0	—	—
5Z4-MG	Rectifier	5.0	—	—				390		

Power Output Approximately 3 Watts. Power Consumption Approximately 85 Watts at 117.5 Volts.

©John F. Rider, Publisher

MODELS 526,5526
Socket,Trimmers
Chassis,Parts
Alignment

CROSLEY RADIO CORP.

ALIGNMENT PROCEDURE

All the circuits in this receiver are very accurately adjusted at the factory and normally should need no further adjustment. However, if it is definitely known that an adjustment is necessary the circuits can best be properly aligned with the use of a modulated signal generator and an output meter.

CONNECTING OUTPUT METER

Connect the output meter to P, and P2 of the 6N6 Output Tube. Be sure the meter is protected from D.C. by connecting a condenser (.1 mfd. or larger—not electrolytic) in series with one of the leads.

1. Tuning I-F Amplifier to 450 Kilocycles.

(a) Connect the output of the signal generator through a .02 mfd. condenser to the top cap of the 6A8 tube, leaving the tube's grid clip in place. Connect the ground lead from the signal generator to the "GND" terminal of the receiver. KEEP THE GENERATOR LEADS AS FAR AS POSSIBLE FROM THE GRID LEADS OF THE OTHER SCREEN GRID TUBES.

(b) Set the station selector so that the tuning condenser plates are completely out of mesh. Turn the volume control knob to the right (ON) and turn the tone control knob to the left (TREBLE).

(c) Turn the band selector switch to the right (High Frequency).

(d) Set the signal generator to 450 kilocycles.

(e) Adjust both trimmers located on top of the 2nd I-F Transformer for maximum output. (Fig. 2).

(f) Adjust both trimmers located on top of the 1st I-F Transformer for maximum output.

(g) Check operations (e) and (f) for more accurate adjustments.

ALWAYS USE THE LOWEST SIGNAL GENERATOR OUTPUT THAT WILL GIVE A REASONABLE OUTPUT METER READING.

2. Aligning R-F Amplifier.

(a) When aligning the R-F Amplifier the output lead from the signal generator should be connected through a dummy antenna to the "ANT" terminal of the receiver. For the broadcast band the dummy antenna should be a .00025 mfd. condenser and for the high frequency band this condenser should be replaced by a 400 ohm (Non Inductive) carbon resistor.

Each band should be shunt aligned, series aligned and then shunt aligned again in the order given. The band selector switch should be set for the band being aligned and the signal generator should be set to the frequency indicated below for each adjustment.

Adjust the "OSC" and "ANT" shunt trimmers (shunt alignment. See Fig. 3) in the order given for maximum output. Tune the station selector to the generator signal for maximum output and then check the adjustment of the "ANT" trimmer. NOTE: When aligning the high frequency band care should be exercised so that the circuits will be aligned on the fundamental frequency rather than on the image frequency which is approximately 900 kilocycles less than the fundamental. To check on this, increase the output of the signal generator approximately 10 times and try to tune-in the signal both at the generator frequency as indicated on the station selector dial and at approximately 900 kilocycles below the correct frequency. If the circuits have been properly aligned the signal can be tuned-in at both positions but much stronger at the correct dial setting.

To adjust the "series" trimmers (Fig. 3) set the signal generator to the frequency indicated below and then tune-in this signal with the station selector for maximum output. Adjust the series trimmer while rocking the tuning condenser back and forth slightly, until no further improvement in output can be obtained.

(b) Signal Generator Frequencies.

	Shunt Alignment	Series Alignment
High Frequency Band	1400 Kc.	600 Kc.
Broadcast Band	6000 Kc.	1500 Kc.

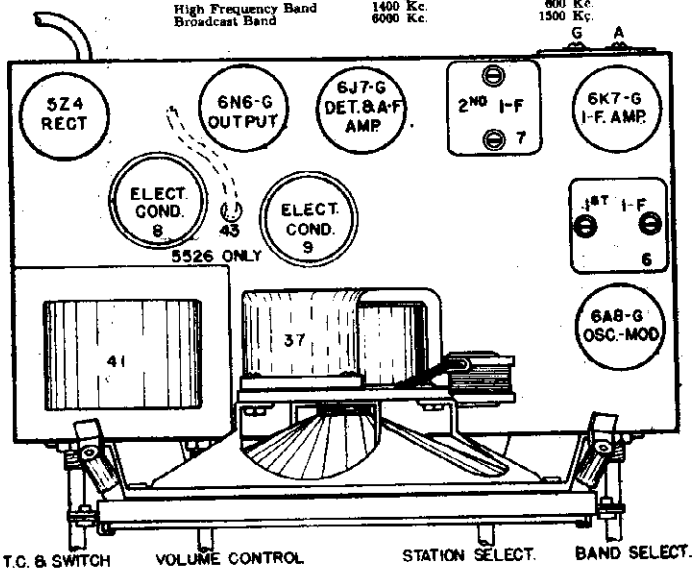

Fig. 2 Top View 526

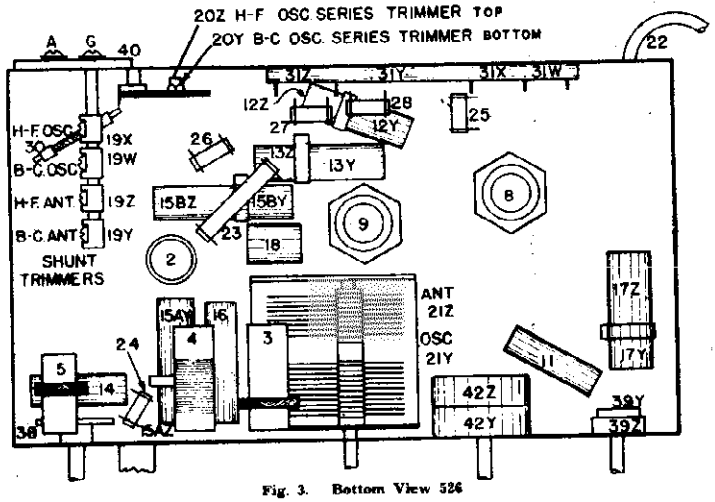

Fig. 3. Bottom View 526

SPECIFICATIONS

The Crosley Radio Models 526 and 5526 are companion models employing the same circuit. The Model 526 is supplied in a mantle cabinet having the speaker mounted on the chassis and the Model 5526 is a console type having the speaker mounted in the cabinet.

This receiver is designed to use either metal tubes or the equivalent glass tubes with octal bases. If glass tubes are replaced with metal tubes or metal tubes are replaced with glass tubes it will be necessary to completely realign the circuits of the receiver. The frequency ranges covered are from 540 to 1710 kilocycles in the broadcast band and from 2350 to approximately 7500 kilocycles in the high frequency band.

TUBES AND VOLTAGE LIMITS

The following table gives the functions of the tubes used, together with the voltage readings between tube socket contacts and chassis. Voltage readings should be taken with a 1000 ohm per volt, 500 volt voltmeter (except filaments) with receiver in operating condition and no signal input. The filament voltages should be measured with an accurate low range A-C voltmeter (Approximately 0 to 10 volts). Voltage limits may vary plus or minus 10% of values given.

PARTS LIST—MODELS 526 and 5526

Figures in first column refer to parts in Diagrams.

Item	Part No.		Description
1A	W	—37922	Dial Light Bulb
1B	W	—37922	Dial Light Bulb
	G3	—37365	Dial Light Socket Assembly
2	G82	—32000	Ant. Coil S. W. B.
3	G81	—32000	Ant. Coil B. C. B.
4	G65	—32002	Osc. Coil S. W. B.
5	G66	—32002	Osc. Coil B. C. B.
6	G71	—32004	1st I-F Assembly
7	G72	—32004	2nd I-F Assembly
8	W	—36055	Condenser 35 Mfd. 400 V.
9	W	—36057	Condenser 40 Mfd. 900 V.
10		None	
11	W	—30805	Condenser 0.01 Mfd. 400 V.
12Z	W	—30322A	Condenser 0.00017 Mfd. 200 V.
12Y			Condenser 0.006 Mfd. 200 V.
13Z	W	—25537A	Condenser 0.001 Mfd. 400 V.
13Y			Condenser 0.03 Mfd. 400 V.
14	W	—28191A	Condenser 0.01 Mfd. 400 V.
15AZ	W	—28623	Condenser 0.02 Mfd. 200 V.
15AY			Condenser 0.02 Mfd. 200 V.
15BZ	W	—28623	Condenser 0.02 Mfd. 200 V.
15BY			Condenser 0.02 Mfd. 200 V.
16	W	—27216	Condenser 0.05 Mfd. 200 V.
17Z	W	—31052	Condenser 0.004 Mfd. 400 V.
17Y			Condenser 0.05 Mfd. 400 V.
18	W	—36541	Condenser 0.02 Mfd. 160 V.
19Z			
19Y	W	—37241A	4 Section Trimmer Cond.
19X			
19W			
20Z	G29	—33006	S. W. Osc. Series Trimmer
20Y			B. C. Osc. Series Trimmer
21Z	G17	—33001	Var. Tuning Cond. Gang.
21Y			
	C	—40821	Dial Glass
	W	—40486	Pointer Disc Mtg. Screw
	B	—40618B	Pointer Disc
	MG16	—40765	Drive Mtg. Brkt. Assembly
	W	—40804	Dial Glass Cushion
	W	—40797	Dial Glass Brkt.
	W	—40798	Support Brkt. L. H.
	W	—40799	Support Brkt. R. H.
	B	—40802	Speaker Mtg. Bracket (526)
	W	—40801	Drive Segment
	W	—40793	Dial Drive Unit
	MG33	—40765	Drive Bearing Assembly
22	B	—33906A	Power Cord & Plug
23		— 5370A	Resistor 20,000 Ohm
24		—21237	Resistor 60,000 Ohm
25		—21875	Resistor 100,000 Ohm
26		—21455	Resistor 300,000 Ohm
27		—33544	Resistor 400,000 Ohm
28		—37245	Resistor 1.5 Megohm
29		None	
30	W	—28106	Resistor 500 Ohm ½ W. Flex.
31Z			10,000 Ohm
31Y	W	—37246A	25,000 Ohm
31X			185 Ohm
31W			185 Ohm
32	G154	—36400	Socket 5Z4
33	G165	—36400	Socket 6N6
34	G157	—36400	Socket 6J7
35	G151	—36400	Socket 6K7
36	G156	—36400	Socket 6A8
37		331-BL-0	Speaker (526)
		432-C1-3	Speaker (5526)
	G3	—35696	Speaker Cable (5526)
	W	—41001A	Speaker Clamp
38W to 38Z		—37247	Band Selector Switch
39Z			Tone control
39Y	W	41022	On-Off Switch
40	G1	—26719	Ant & Grd. Terminal Board
41	G12	—28500	Power Trans. 60 Cy. 110 V.
	G13	—28500	Power Trans. 25 Cy. 110 V.
	G14	—28500	Power Trans. 25 Cy. 220 V.
42Z		—41027	Volume Control A-F Grid
42Y			Volume Control Output Grid.
	B	—40839	Escutcheon Ring
	W	—28760B	Escutcheon Pin
	W	—37339	Knob V. C. & Station Select.
	W	—37341	Knob T. C. & Band Select.
	W	—40911	Shield, Tube
	W	—27981A	Base Tube Shield

©John F. Rider, Publisher

CROSLEY RADIO CORP.

MODEL 535
Schematic, Socket Voltage

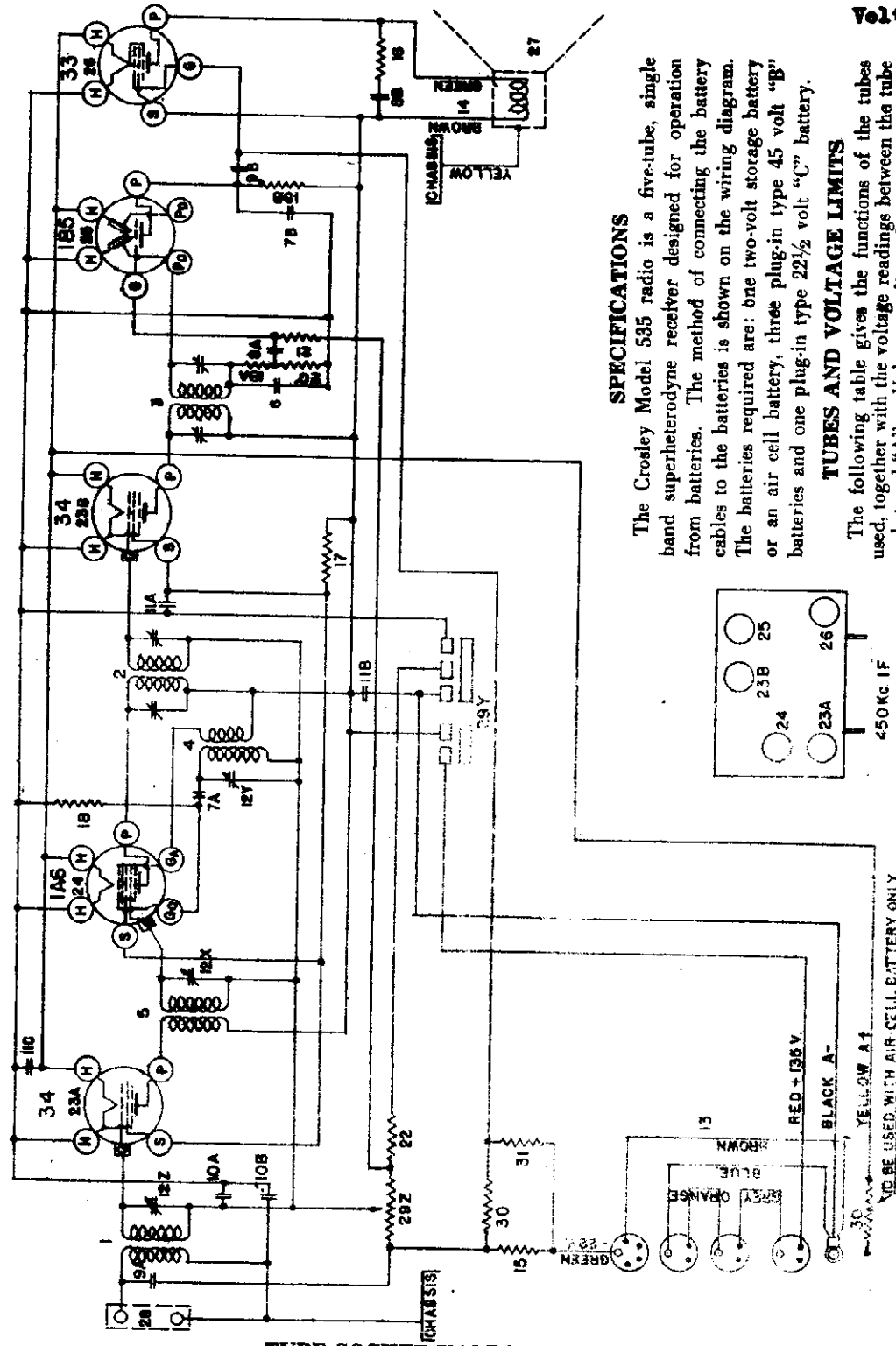

FIG. 1—WIRING DIAGRAM

SPECIFICATIONS

The Crosley Model 535 radio is a five-tube, single band superheterodyne receiver designed for operation from batteries. The method of connecting the battery cables to the batteries is shown on the wiring diagram. The batteries required are: one two-volt storage battery or an air cell battery, three plug-in type 45 volt "B" batteries and one plug-in type 22½ volt "C" battery.

TUBES AND VOLTAGE LIMITS

The following table gives the functions of the tubes used, together with the voltage readings between the tube socket and "A"—. Voltage readings should be taken with a 1000 ohm per volt, 250 volt voltmeter (except filaments) with receiver in operating condition and no signal input. Filament voltages should be measured with an accurate low range D.C. voltmeter (0 to 10 volts). Voltage limits may vary plus or minus 10% of values given.

TUBE SOCKET VOLTAGE READINGS

Tube	Where Used	H	P	S	G	Ga	Go
34	R-F Amplifier	2.0	135	67.5	-2.5	—	—
1A6	Osc.-Mod.	2.0	135	67.5	-2.5	135	-5 to -10
34	I-F Amplifier	2.0	135	67.5	-2.5	—	—
1B5	Diode Detector & A-F Amplifier	2.0	65	—	-0.1	—	—
33	Output	2.0	130	135	-1.0	—	—

"A" BATTERY DRAIN APPROXIMATELY 0.5 AMPERES—"B" BATTERY DRAIN APPROXIMATELY 23 MILS. MILS.

POWER OUTPUT APPROXIMATELY 1 WATT.

DECEMBER 1935

MODEL 535
Socket, Trimmers
Chassis, Parts
Alignment

CROSLEY RADIO CORP.

Connect one terminal of the output meter to the plate and the other terminal to the screen of the 33 Output tube. Be sure the meter is protected from D.C. by connecting a condenser (.1 mfd. or larger—not electrolytic) in series with one of the leads.

1. Tuning I-F Amplifier to 450 Kilocycles.

(a) Connect the output of the signal generator through a .02 mfd. condenser to the top cap of the 1A6 Osc-Mod tube, leaving the tube's grid clip in place. Connect the ground lead from the signal generator to the "GND" terminal of the receiver. KEEP THE GENERATOR LEADS AS FAR AS POSSIBLE FROM THE GRID WIRES OF THE OTHER SCREEN GRID TUBES.

(b) Set the station selector condenser so that the plates are completely out of mesh and turn the volume control to the right (ON).

(c) Set the signal generator to 450 kilocycles.

(d) Adjust the trimmer condensers located on top of the 2nd I-F transformer for maximum output. (Fig. 2).

(e) Adjust the trimmer condensers located on top of the 1st I-F transformer for maximum output.

(f) Repeat operations (d) and (e) for more accurate adjustments.

ALWAYS USE THE LOWEST SIGNAL GENERATOR OUTPUT THAT WILL GIVE A REASONABLE OUTPUT METER READING.

2. Aligning R-F Amplifier.

(a) Connect the output lead from the signal generator through a .00025 mfd. condenser to the "ANT" terminal of the receiver.

(b) Set the signal generator to 1400 kilocycles.

(c) Adjust the station selector to 140 on the dial.

(d) Adjust the trimmer located on the "OSC" section of the condenser gang for maximum output. (Fig. 3.)

(e) Adjust the trimmer located on the "R-F" section of the condenser gang for maximum output.

(f) Adjust the trimmer located on the "ANT" section of the condenser gang for maximum output.

(g) Repeat operations (d), (e) and (f) for more accurate adjustments.

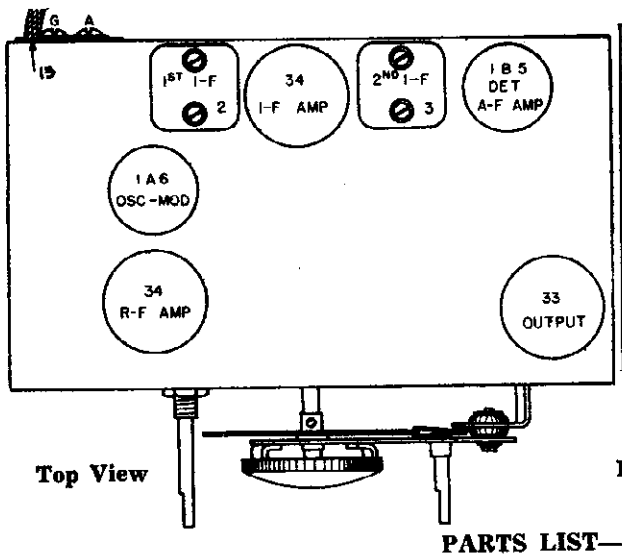

Top View

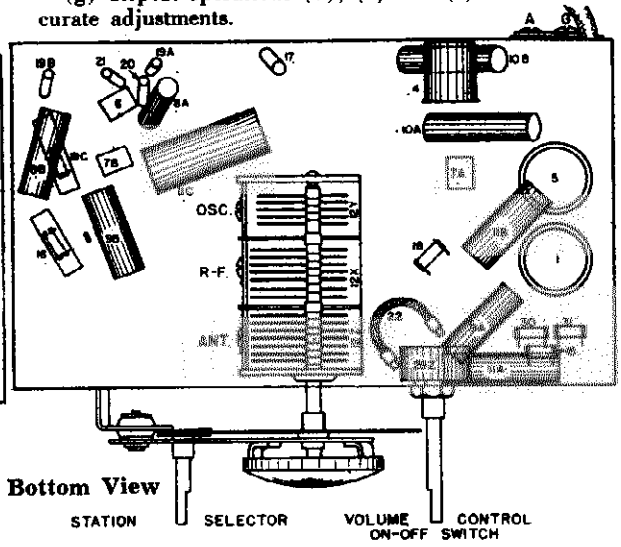

Bottom View

PARTS LIST—MODEL 535

Figures in first column refer to parts in Diagrams.

Item No.	Part No.	Description
1	G55—32000	Antenna Coil (only)
	W —30802A	Coil Shield
	W —30026	Retaining Ring
2	G73—32004	First I. F. Assembly
3	G38—32004	Second I. F. Assembly
4	G67—32002	Oscillator Coil (only)
	W —25025B	Coil Shield
	W —25200	Coil Socket
	W —26891	Insulating Washer
	W —21541C	Retaining Ring
5	G53—32001	R. F. Coil (only)
	W —30802A	Coil Shield
	W —30026	Retaining Ring
6	G2 —34002	Condenser 0.0001 Mfd. Mica
7A	G1 —34002	Condenser 0.00025 Mfd. Mica
7B	G1 —34002	Condenser 0.00025 Mfd. Mica
8A	W —28619	Condenser 0.006 Mfd. 160 Volt
8B	W —28619	Condenser 0.006 Mfd. 160 Volt
9A	W —28621	Condenser 0.02 Mfd. 200 Volt
9B	W —28621	Condenser 0.02 Mfd. 200 Volt
10A	W —24049B	Condenser 0.1 Mfd. 200 Volt
10B	W —24049B	Condenser 0.1 Mfd. 200 Volt
11A	W —29910A	Condenser 0.25 Mfd. 200 Volt
11B	W —29910A	Condenser 0.25 Mfd. 200 Volt
11C	W —29910A	Condenser 0.25 Mfd. 200 Volt
12Z, 12X, 12Y	G43—33002	Three Section Tuning Con. Gang
	—37147	Dial Drive Unit
	MG16—35757	Drive Mounting Bracket
	W —36150A	Dial Face
	—37158	Dial Glass
	—37156	Pointer
	—37157	Pointer Screw (1)
13	C —37396	Battery Cable
14	W —35111	Speaker Cable
15	—27121	Resistor 5000 Ohm ¼ W.
16	—24814	Resistor 7000 Ohm ¼ W.
17	—37377	Resistor 20,000 Ohm 1 W.
18	—34019	Resistor 75,000 Ohm ¼ W.
19A	—21455	Resistor 300,000 Ohm ¼ W.
19B	—21455	Resistor 300,000 Ohm ¼ W.
19C	—21455	Resistor 300,000 Ohm ¼ W.
20	—21454	Resistor 1.0 Megohm ¼ W.
21	—26577	Resistor 3.0 Megohm ¼ W.
22	W —23013	Resistor 20,000 Ohm ½ W. Flex.
23A	G31—28807	Socket 34
23B	G31—28807	Socket 34
24	G55—28807	Socket 1A6
25	G91—28807	Socket 1B5
26	G36—28807	Socket 33
	W —26974	Tube Shield
	W —26973	Shield Base
27	31—MS—3	Speaker
28	G1 —26719	Terminal Board—Ant & Grnd.
29Z, 29X	—37409	Volume Control On-Off Switch
30	—34883	Resistor 2. Megohm ¼ W.
31	—26578	Resistor 5.0 Megohm ¼ W.
	B —35917	Escutcheon
	D —28	Escutcheon Screw (3)
	W —31585B	Knob (2)
	G2 —23300	Resistor 0.53 Ohm (For air cell only)

©John F Dixon Publishing

MODEL 536,553(

Schematic,

Voltage

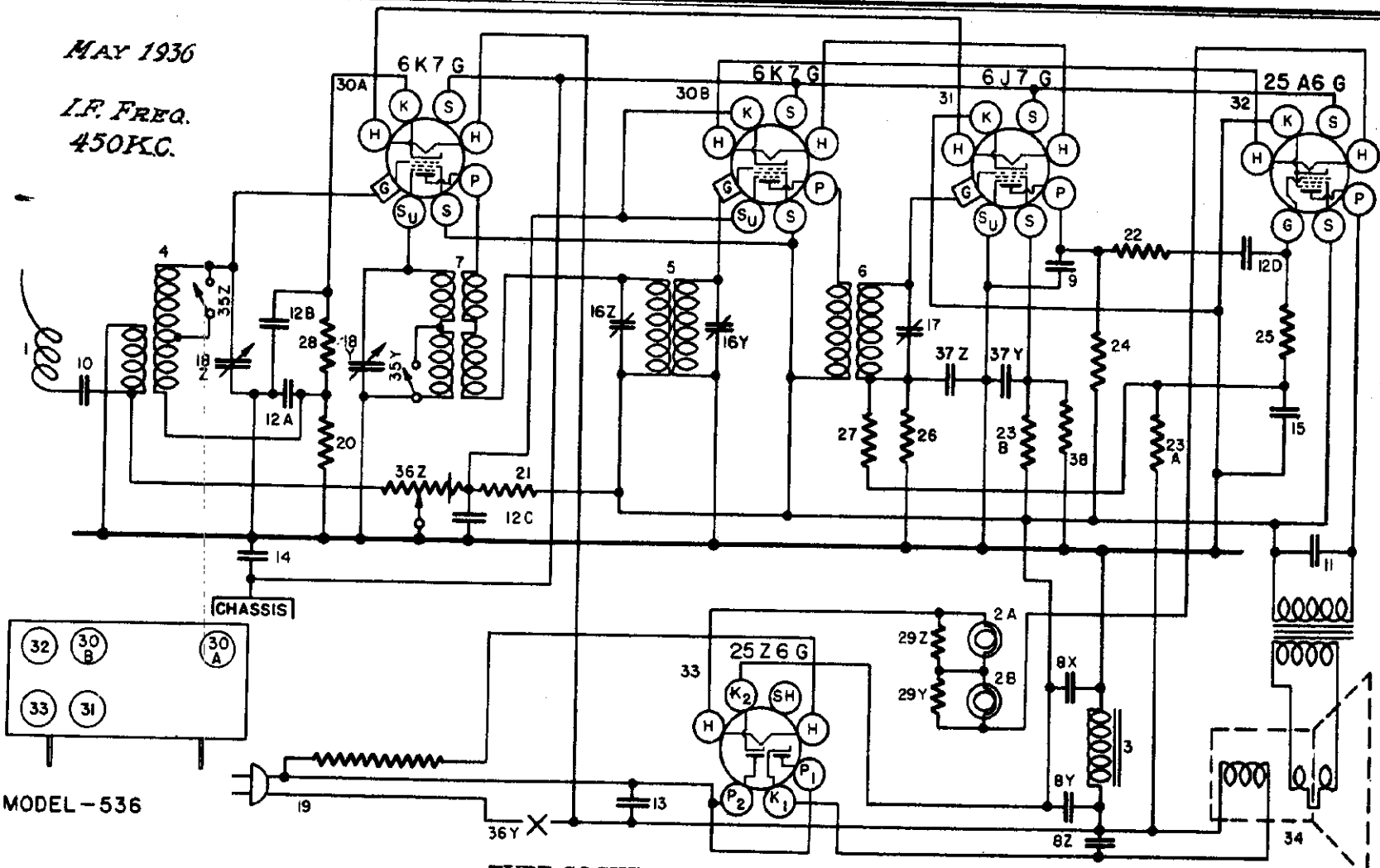

TUBE SOCKET VOLTAGE READINGS

Tube	Where Used	H	P	S	G	K
6K7	Osc.- Modulator	6.5	100	100	16	19
6K7	I-F Amplifier	6.5	100	100	0	3
6J7	Detector	6.5	35	10	0	—
25A6	Output	25.2	92	100		—
25Z6	Rectifier	25.2				—

Readings taken on 117.5 Volt A-C Power Supply.
Power Consumption Approximately 50 Watts at 117.5 Volts.
Voltage Reading Approximately 10% Lower on 117.5 Volts, D. C.

MODELS 536,5536
Socket,Trimmers
Chassis,Parts
Alignment

CROSLEY RADIO CORP.

ALIGNMENT PROCEDURE

All the circuits in this receiver are very accurately adjusted at the factory and normally should need no further adjustment. However, if it is definitely known that an adjustment is necessary the circuits can best be properly aligned with the use of a modulated signal generator and an output meter.

CONNECTING OUTPUT METER

Connect one terminal of the output meter to the plate and the other terminal to the screen of the 25A6 Output tube. Be sure the meter is protected from D. C. by connecting a condenser (.1 mfd. or larger—not electrolytic) in series with one of the leads.

1. Tuning I-F Amplifier to 450 Kilocycles.

(a) Connect the output of the signal generator through a .02 condenser to the top cap of the 6K7 Oscillator-Modulator tube, leaving the tube's grid clip in place. Connect the ground lead from the signal generator through a .05 mfd., or larger, condenser to the receiver chassis. KEEP THE GENERATOR LEADS AS FAR AS POSSIBLE FROM THE GRID LEADS OF THE OTHER SCREEN GRID TUBES.

(b) Set the station selector so that the plates of the condenser gang are completely out of mesh, turn the band selector switch to the right (High Frequency Position) and turn the volume control to the right (ON).

(c) Set the signal generator to 450 kilocycles.

(d) Adjust the 2nd I-F trimmer condenser, Illus. No. 17—Fig. 3, located on the rear of the chassis for maximum output.

(e) Adjust the 1st I-F trimmer condensers, Illus. Nos. 16Z and 16Y, located on the rear of the chassis for maximum output.

(f) Check operations (d) and (e) for more accurate adjustments.

ALWAYS USE THE LOWEST SIGNAL GENERATOR OUTPUT THAT WILL GIVE A REASONABLE OUTPUT METER READING.

2. Aligning R-F Amplifier.

(a) Connect the output lead from the signal generator through a .00025 mfd. condenser to the antenna condenser at the point where the antenna wire is connected.

(b) Set the signal generator to 1400 kilocycles.

(c) Adjust the station selector to 140 on the dial.

(d) Adjust the trimmer (18-Y Fig. 3) located on the "OSC" section of the condenser gang for maximum output.

(e) Adjust the trimmer (18-Z) located on the "ANT" section of the condenser gang for maximum output.

(f) Readjust the tuning condenser slightly for maximum output.

(g) Repeat operation (e) for more accurate adjustment.

NOTE: The locations of the speaker and electrolytic condenser (Illus. No. 8) are interchanged on Models 536 and 5536. The dial used on Model 5536 is larger than the dial used on Model 536 and replacement parts are clearly indicated in the Parts List.

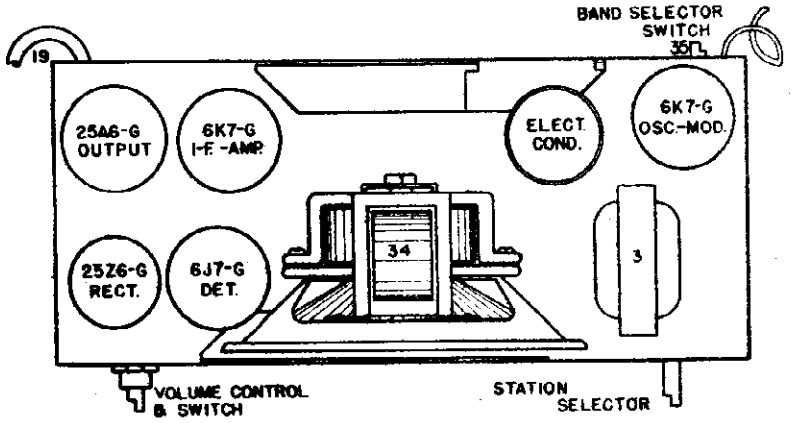

Fig. 2 Top View

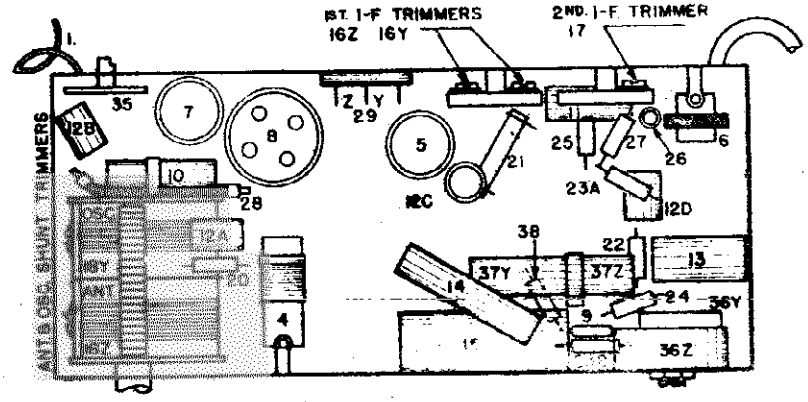

Fig. 3 Bottom View

SPECIFICATIONS

The Crosley Models 536 and 5536 are five-tube superheterodyne receivers designed for operation on a 110 volt power supply, either AC or DC.

The tuning range of the receiver is from 540-1550 kilocycles (555-195 Meters) in the Broadcast Band and from 1500-3450 Kilocycles (200-87 Meters) in the High Frequency Band.

TUBE AND VOLTAGE LIMITS

The following table gives the functions of the tubes used, together with the voltage readings between the tube socket contacts and one of the terminals of the 25Z6 tube. Voltage readings should be taken with a 1000 ohm per volt, 250 volt voltmeter (except filaments) with volume control full on and no signal input. The filament voltages should be measured with an accurate low range voltmeter. Voltage limits may vary plus or minus 10% of values given.

PARTS LIST--MODEL 536-5536

Figures in first column refer to parts in Diagrams.

Item No.	Part No.	Description
1	W —29784B	Antenna—Flexible
2A	W — 30998	Dial Light
2B	W — 30998	Dial Light
	G6 — 27136	Dial Light Socket Assembly
3	G4 — 28859	Filter Choke
4	G10 — 32000	Ant. Coil
5	G101 — 32004	1st I-F Coil
6	G103 — 32005	2nd I-F Coil
7	G91 — 32002	Osc. Coil
8Z		8 Mfd. 150 V.
8Y	W — 30015	Condenser, 16 Mfd. 150 V.
8X		25 Mfd. 150 V.
9	G1 — 32002	Condenser, .0002 Mfd. (Ant.-Osc.)
10	W — [illegible]	Condenser, .003 Mfd. 600 V.
11	W — [illegible]	Condenser, .01 Mfd. 400 V.
12A	W — 36041	Condenser, .02 Mfd. 400 V.
12B	W — 36041	Condenser, .02 Mfd. 400 V.
12C	W — 35954	Condenser, .02 Mfd. 400 V.
12D	W — 36041	Condenser, .02 Mfd. 400 V.
13	W — 32780B	Condenser, .05 Mfd. 400 V.
14	W — 34019C	Condenser, 1 Mfd. 400 V.
16	W — 37075	Condenser, 2 Section Trimmer
17	W — 40996	Condenser, 1 Section Trimmer
18	G22 — 33001	2 Section Var. Tuning Condenser
	C — 40926	Dial Glass—536 only
	W — 40632B	Pointer Disc—536 only
	W — 41014A	Dial Glass Bracket R.H.—536 only
	W — 41015A	Dial Glass Bracket L.H.—536 only
	W — 41727	Drive Chain—5536 only
	W — 40633B	Bearing Support—5536 only
	W — 41112A	Driven Sprocket—536 only
	W — 41113A	Driver Sprocket
	W — 40486	Pointer Fine Mtg. Screw
	C — 40927	Dial Glass—5536 only
	B — 40818B	Pointer Disc—5536 only
	W — 41158	Support Bracket L.H.—5536 only
	W — 41143	Support Bracket R.H.—5536 only
	W — 40797	Dial Glass Bracket—5536 only
	W — 41162	Drive Chain—5536 only
	W — 41160	Bearing Bracket—5536 only
	W — 41159A	Shaft—5536 only
	W — 40909	Spring Washer—5536 only
	W — 31940A	Snap Ring—5536 only
19	B — 40999	Power Cord & Plug
20	— 36316	Resistor, 2700 Ohm 1W.
21	— 4821C	Resistor, 10,000 Ohm 1W.
22	— 35929	Resistor, 60,000 Ohm ½W.
23A	— 35600	Resistor, 100,000 Ohm ½W.
23B	— 35600	Resistor, 100,000 Ohm ½W.
24	— 36601	Resistor, 300,000 Ohm ½W.
25	— 36322	Resistor, 500,000 Ohm ½W.
26	— 35827	Resistor, 2 Megohm ½W.
27	— 33890	Resistor, 10 Megohm ½W.
28	W — 28389	Resistor, 350 Ohm 5W. Flex.
29	W — 41000	Candohm—2 Sections
30A	G151—36400	Socket Type 6K7
30B	G151—36400	Socket Type 6K7
31	G157—36400	Socket Type 6J7
32	G161 36400	Socket Type 25A6
33	G162—36400	Socket Type 25Z6
	W — 40911	Tube Shield
	W — 27981A	Tube Shield Base
34	B — 41012	Speaker 237BL9
	W — 40588	Speaker Mtg. Bracket
	— 6415	Mtg. Bracket Screw
35	— 41004	Band Selector Switch
36Z	— 41002	Volume Control 4000-Ohm Tap 180 Ohm
36Y	— 41002	Line Switch
	B — 40590	Escutcheon
	D — 28	Escutcheon Mtg. Screws (4) 536 only
	W — 41019	Knob
	W — 40839	Escutcheon
	W — 40840	Escutcheon Plate
	W — 29760A	Escutcheon Pin 5536 only
	W — 41019	Knob (2)
	W — 41021	Knob (1)

©John F. Rider Publisher

CROSLEY RADIO CORP.

MODEL 54
Schemati
Voltage

SPECIFICATIONS

The Crosley Model 545 radio is a five-tube single band superheterodyne receiver designed for operation on a 110 volt power supply, either AC or DC.

The frequency range covered is from 530 Kc. to 1710 Kc.

TUBES AND VOLTAGE LIMITS

The following table gives the functions of the tubes used, together with the voltage readings between the tube socket contacts and one of the terminals of the 25Z5 tube. Voltage readings should be taken with a 1000 ohm per volt, 250 volt voltmeter (except filaments) with volume control full on and no signal input. The filament voltages should be measured with an accurate low range D-C voltmeter. Voltage limits may vary plus or minus 10% of values given.

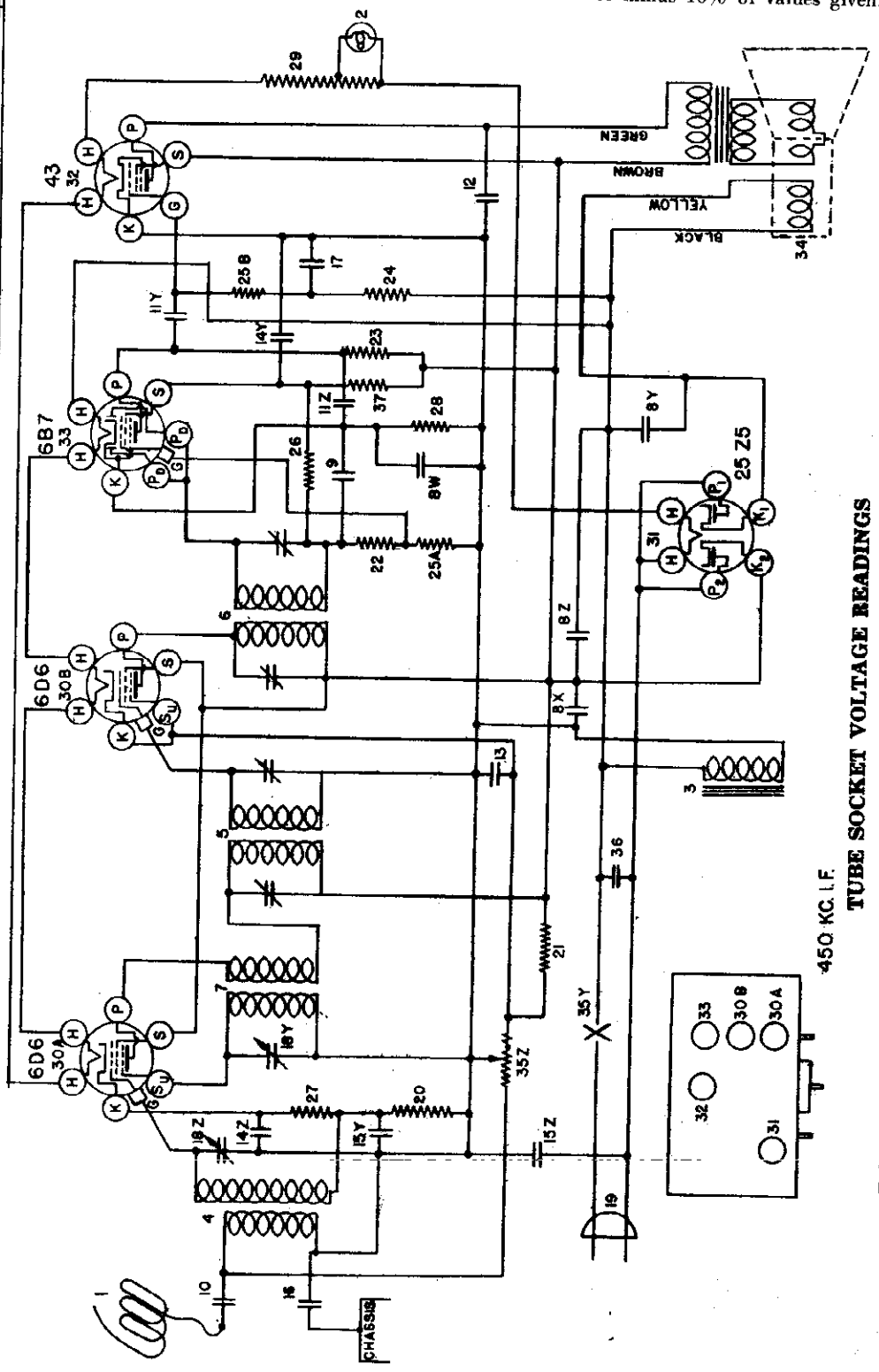

TUBE SOCKET VOLTAGE READINGS

Tube	Where Used	H	P	S	Su	G	K
6D6	Osc.-Mod.	6.5	105	105	0	-17	20
6D6	I-F Amplifier	6.5	105	105	3.5	0	3.5
6B7	Diode Detector & A-F Amplifier	6.5	25	20	—	0	1.5
43	Output	25.2	100	105	—	-20	0
25Z5	Rectifier	25.2	117.5 A.C.				

Power Consumption Approximately 55 Watts at 120 Volts.

Voltage Reading Approximately 10% Lower on 120 V., D.C.

WIRING DIAGRAM—MODEL 545

©John F. Rider, Publisher

MODEL 545
Socket, Trimmers
Chassis, Parts
Alignment

CROSLEY RADIO CORP.

CONNECTING OUTPUT METER

Connect one terminal of the output meter to the plate and the other terminal to the screen of the 43 Ouput tube. Be sure the meter is protected from D.C. by connecting a condenser (.1 mfd. or larger—not electrolytic) in series with one of the leads.

1. Tuning I-F Amplifier to 450 Kilocycles.

(a) Connect the output of the signal generator through a .02 condenser to the top cap of the 6D6 Oscillator-Modulator tube, leaving the tube's grid clip in place. Connect the ground lead from the signal generator through a .05 mfd., or larger, condenser to the receiver chassis. KEEP THE GENERATOR LEADS AS FAR AS POSSIBLE FROM THE GRID LEADS OF THE OTHER SCREEN GRID TUBES.

(b) Set the station selector so that the plates of the condenser gang are completely out of mesh and turn the volume control to the right (ON).

(c) Set the signal generator to 450 kilocycles.

(d) Adjust both trimmers located on top of the 2nd I-F transformer for maximum output. Fig. 2.

(e) Adjust both trimmers located on top of the 1st I-F transformer for maximum output.

(f) Check operations (d) and (e) for more accurate adjustments.

ALWAYS USE THE LOWEST SIGNAL GENERATOR OUTPUT THAT WILL GIVE A REASONABLE OUTPUT METER READING.

2. Aligning R-F Amplifier.

(a) Connect the output lead from the signal generator through a .00025 mfd. condenser to the antenna condenser at the point where the antenna wire is connected.

(b) Set the signal generator to 1400 kilocycles.

(c) Adjust the station selector to 140 on the dial.

(d) Adjust the trimmer (18-Y Fig 3) located on the "OSC" section of the condenser gang for maximum output.

(e) Adjust the trimmer (18-Z) located on the "ANT" section of the condenser gang for maximum output.

(f) Readjust the tuning condenser slightly for maximum output.

(g) Repeat operation (e) for more accurate adjustment.

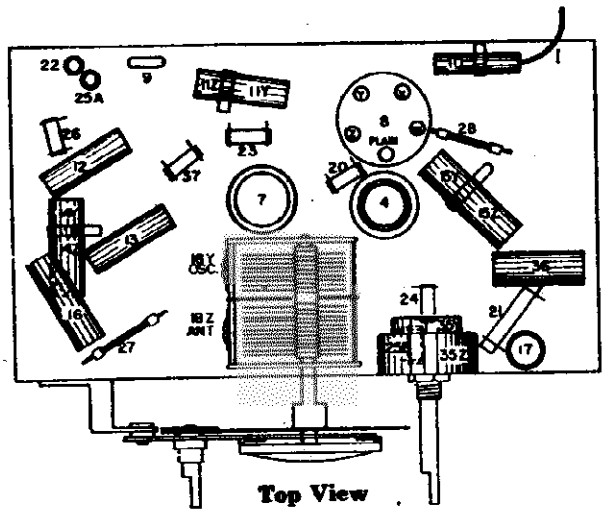

Top View

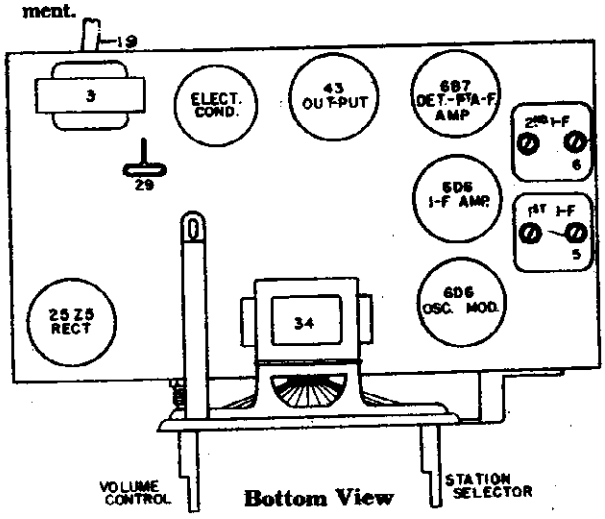

Bottom View

Figures in first column refer to parts in Diagrams.

Item No.	Part No.	Description
1	W —29784B	Ant. (Flex Wire)
2	G4 —27134	Dial Light Socket Assm.
3	G3 —28859	Filter Choke
4	G51—32000	Ant. Coil
	W —36457	Ant. Coil Mounting Brkt.
5	G51—32004	1st I. F. Assm.
6	G49—32004	2nd I. F. Assm.
7	G6 —32002	Osc. Coil
	W —25200	Coil Socket
	W —25025B	Coil Shield
	W —26891	Coil Insulator
	W —21541C	Retaining Ring
8Z, 8Y, 8X, 8W	W —31992	Condenser, 25. Mfd. 125 V. / Condenser, 8. Mfd. 125 V. / Condenser, 16. Mfd. 100 V. / Condenser, 10. Mfd. 125 V.
9	G2 —34002	Condenser, 100. Mmfd.
10	W —30325A	Condenser, 0.003 Mfd. 200 V.
11Z	W —30322A	Condenser, 0.00017 Mfd. 200 V.
11Y		Condenser, 0.006 Mfd. 200 V.
12	W —30323	Condenser, 0.01 Mfd. 200 V.
13	W —28621	Condenser, 0.02 Mfd. 200 V.
14Z, 14Y	W —28623	Condenser, 0.02 Mfd. 200 V. / Condenser, 0.02 Mfd. 200 V.
15Z, 15Y	W —29271	Condenser, 0.02 Mfd. 400 V. / Condenser, 0.02 Mfd. 400 V.
16	W —24049B	Condenser, 0.1 Mfd. 200 V.
17	W —29910A	Condenser, 0.25 Mfd. 200 V.
18Z, 18Y	G14—33001	2 Section Tuning Cond. Gang
	—36147B	Dial Drive Assm.
MG16	—35757	Dial Drive Support Brkt. Assm.

Item No.	Part No.	Description
	W —36150A	Dial Face
	—37158	Dial Glass
	—37156	Pointer
	—37157	Pointer Screw
19	B —33906A	Power Supply Cord & Plug
20	—31093	Resistor, 2700 Ohm ¼ W.
21	—23616	Resistor, 15,000 Ohm 1. W.
22	—21237A	Resistor, 60,000 Ohm ¼ W.
23	—35929	Resistor, 150,000 Ohm ¼ W.
24	—21455	Resistor, 300,000 Ohm ¼ W.
25A	—23785	Resistor, 500,000 Ohm ¼ W.
25B	—23785	Resistor, 500,000 Ohm ¼ W.
26	—33490	Resistor, 10. Megohm ¼ W.
27	W —28589	Resistor, 350 Ohm ½ W. Flex.
28	W —27503	Resistor, 1,400 Ohm ½ W. Flex.
29	W —36114	Resistor, Candohm
30A	G75—28807	Socket, 6D6
30B	G75—28807	Socket, 6D6
31	G51—28807	Socket, 25Z5
32	G30—28807	Socket, 43
33	G48—28807	Socket, 6B7
	W —35772	Tube Shield (Half) (6)
	W —35773	Tube Shield Cap (3)
	W —35774	Tube Shield Base (3)
34	214—BL—9	Speaker
35Z, 35Y	—36265	Volume Control / On-Off Switch
36	W —32780A	Condenser, 0.05 Mfd. 400 V.
37	—34883	Resistor, 2 Megohm ¼ W.
	B —35917	Escutcheon
	D —28	Escutcheon Screws (3)
	W —31585B	Knobs (2)

© John F. Rider Publisher

CROSLEY RADIO CORP.

MODEL 546
Schematic
Voltage

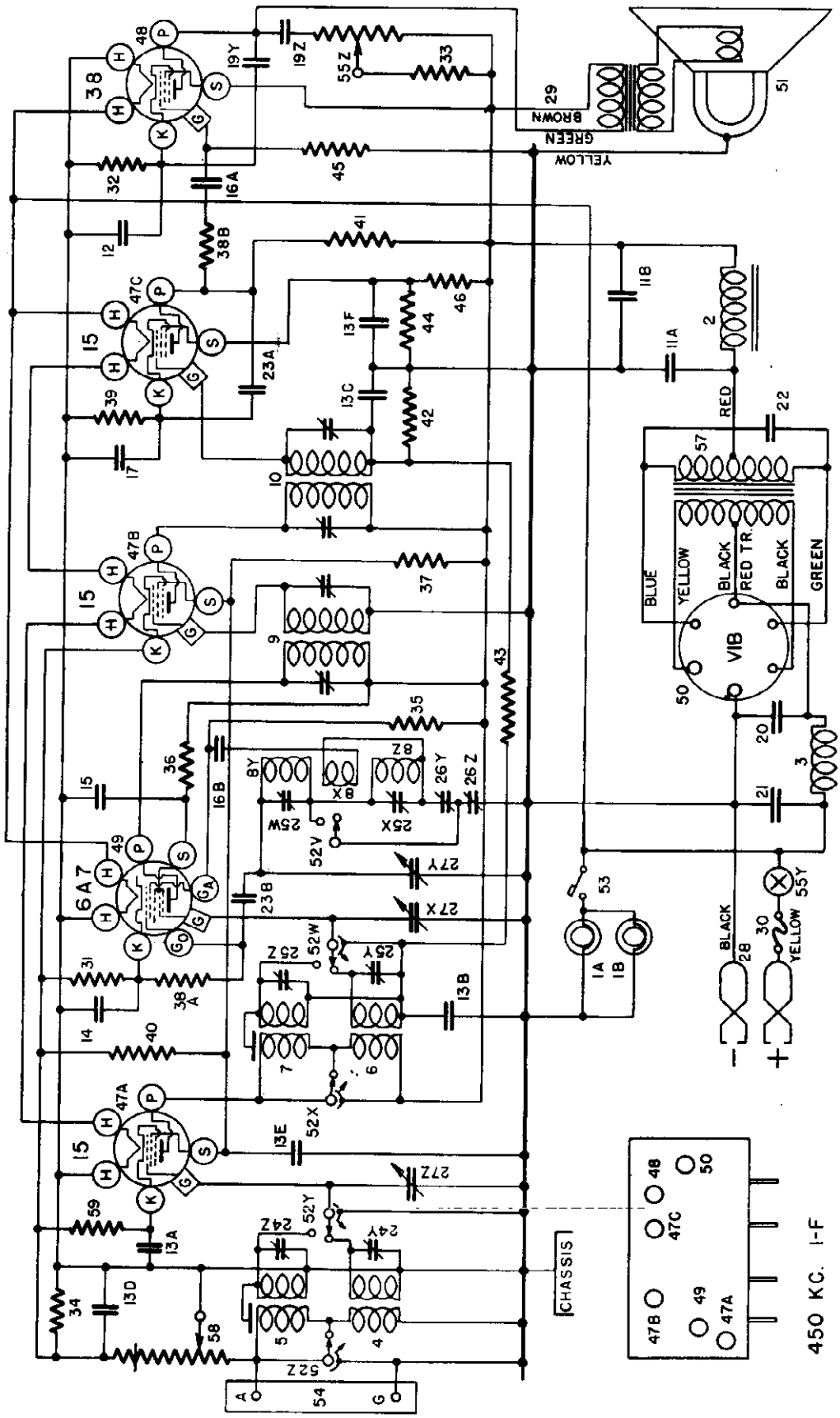

TUBE SOCKET VOLTAGE READINGS

Tube	Function	H	P	S	K	Ga	Go
15	R-F Amplifier	2.0	180	96	2.6	—	—
6A7	Oscillator-Modulator	6.0	180	84	3.8	130	Neg
15	I-F Amplifier	2.0	180	96	2.6	—	—
15	Detector	2.0	90	13	3.8	—	—
38	Output	6.0	170	180	14.5	—	—

Power consumption approximately 2.2 amperes at 6.0 volts.
Power Output approximately .7 watt.

MAY, 1936

©John F. Rider. Publisher

MODEL 546
Socket, Trimmers
Chassis, Parts
Alignment

CROSLEY RADIO CORP.

ALIGNMENT PROCEDURE

All the circuits in this receiver are very accurately adjusted at the factory and normally should need no further adjustment. However, if it is definitely known that an adjustment is necessary the circuits can best be properly aligned with the use of a modulated signal generator and an output meter.

CONNECTING OUTPUT METER

Connect one terminal of the output meter to the plate and the other terminal to the screen of the 38 Output tube. Be sure the meter is protected from D.C. by connecting a condenser (.1 mfd. or larger—not electrolytic) in series with one of the leads.

1. Tuning I-F Amplifier To 450 Kilocycles.

(a) Connect the output of the signal generator through a .02 mfd. condenser to the top cap of the 6A7 tube, leaving the tube's grid clip in place. Connect the ground lead from the signal generator to the "GND" terminal of the receiver. KEEP THE GENERATOR OUTPUT LEAD AS FAR AS POSSIBLE FROM THE GRID LEADS OF THE OTHER SCREEN GRID TUBES.

(b) Set the station selector so that the tuning condenser plates are completely out of mesh. Turn the volume control knob to the right (ON) and turn the tone control knob to the left (TREBLE).

(c) Turn the band selector switch to the right (High Frequency Band).

(d) Set the signal generator to 450 kilocycles.

(e) Adjust both trimmers located on top of the 2nd I-F transformer for maximum output.

(f) Adjust both trimmers located on top of the 1st I-F transformer for maximum output.

ALWAYS USE THE LOWEST SIGNAL GENERATOR OUTPUT THAT WILL GIVE A REASONABLE OUTPUT METER READING.

2. Aligning R.F Amplifier.

When aligning the R-F amplifier the output lead from the signal generator is connected to the antenna ("A-1") terminal of the receiver through a .00025 mfd. condenser.

Each band should first be shunt aligned and then series aligned. The band selector switch should be set for the band being aligned and the signal generator should be set to the frequency indicated for each adjustment.

Adjust the "OSC", "R-F" and "ANT" shunt trimmers in the order given for maximum output. Tune the station selector to the signal generator for maximum output and then check the adjustments of the "R-F" and "ANT" trimmers in the order given. Do not readjust the "OSC" trimmer. NOTE: When aligning the High Frequency Band care must be exercised so that the circuits will be aligned on the fundamental frequency rather than on the image frequency which is approximately 900 kilocycles less than the fundamental. To check on this, increase the output of the signal generator approximately ten times and try to tune-in the signal at both the generator frequency as indicated on the station selector dial and at approximately 900 kilocycles below the correct frequency. If the circuits have been properly aligned the signal can be tuned in at both positions but much stronger at the correct position.

To adjust the "series" trimmers set the signal generator to the frequency indicated and then tune-in this signal with the station selector for maximum output. Adjust the "series" trimmer while rocking the tuning condenser back and forth slightly, until no further improvement in output can be obtained.

SIGNAL INPUT FREQUENCIES

		Shunt Alignment	Series Alignment
American Broadcast Band	(BLUE)	1400 Kc.	600 Kc.
High Frequency Band	(RED)	6000 Kc.	2500 Kc.

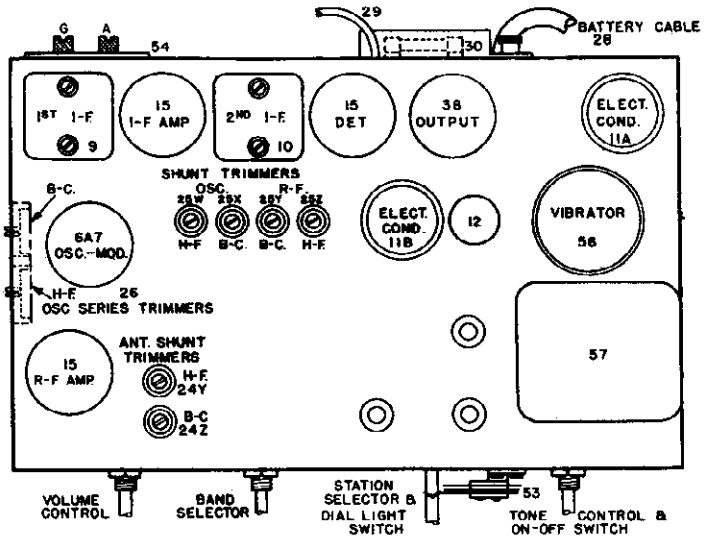

Fig. 2. Top View

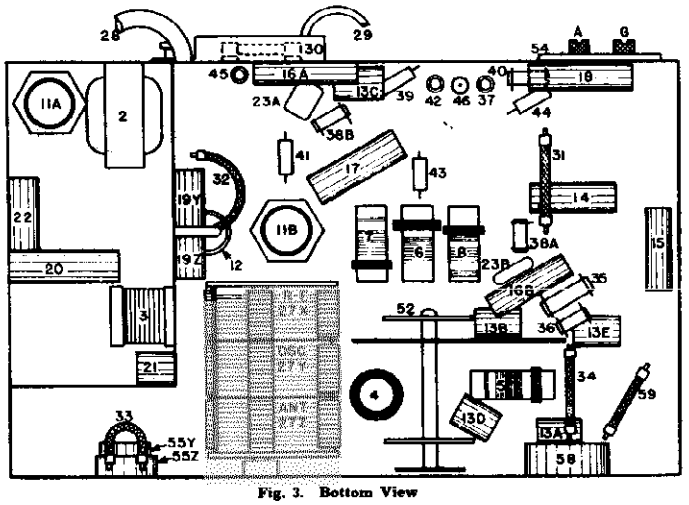

Fig. 3. Bottom View

TUBES AND VOLTAGE LIMITS

The following table gives the functions of the tubes used, together with the voltage readings between the tube socket contacts and the chassis. Voltage readings should be taken with a 1000 ohm per volt, 250 volt power supply unit which employs a self-rectifying type vibrator.

The tuning range of the receiver is from 540 to 7000 kilocycles and is divided into two bands as follows:

(American Broadcast Band)
(High Frequency Band).

voltmeter (except filaments) with the volume control full on and no signal input. The filament voltages should be measured with an accurate low range D-C voltmeter (approximately 0 to 10 volts). Voltage limits may vary plus or minus 10% of values given.

PARTS LIST—MODEL 546

Figures in first column refer to parts in Diagrams.

Item No.	Part No.	Description
1AB	W —37922	Dial Bulb
	G3 37965	Dial Light Socket Assembly
2	G27 —24528	Filter Choke
3	G16 —28067	R-F Filter Choke
4	G114—32000	Ant Coil—B-C-B
5	G115—32000	Ant Coil—H-F-B
6	G81 —32001	R-F Coil—B-C-B
7	G82 —32001	R-F Coil—H-F-B
8	G104—32002	Double Osc Coil.
9	G109—32004	1st I-F Assembly
10	G110 32004	2nd I-F Assembly
11A	W —36057	Condenser 40 Mfd. 300 V. Electrolytic
11B	W —36057	Condenser 40 Mfd. 300 V. Electrolytic
12	W —41195	Condenser 12 Mfd. 25 V. Electrolytic
13A To 13E	W —35936	Condenser .05 Mfd. 200 V.
13A	W —35936	Condenser .05 Mfd. 200 V.
14	W —32380	Condenser .05 Mfd. 200 V.
15	W —30488	Condenser .02 Mfd. 400 V.
16A	W —34647	Condenser .006 Mfd. 400 V.
16B	W —34647	Condenser .005 Mfd. 400 V.
17	W —34712	Condenser .25 Mfd. 160 V.
18	W —24049B	Condenser .1 Mfd. 200 V.
19Z	W 25537A	Condenser .03 Mfd. 400 V.
19Y		Condenser .001 Mfd. 400 V.
20	W —37174	Condenser .5 Mfd. 160 V.
21	W —37190	Condenser .02 Mfd. 160 V.
22	W —37214	Condenser .001 Mfd. 1000 V.
23A	G2 - 34002	Condenser .0001 Mfd. (Molded
23B	G2 —34002	Condenser .0001 Mfd. (Molded
24	W —37986	2 Section Shunt Trimmer Condenser
25	W —41247	4 Section Shunt Trimmer Condenser
26	—41288	2 Section Osc. Series Trimmer
27	G23 —33001	3 Section Var. Tuning Condenser
	C —41321	Dial (Glass)
	W —40804	Dial Glass Cushion
	B —40818B	Pointer Disc
	W - 40486	Pointer Disc Screw
	W —41314	Shaft Assembly (Sprocket etc.)
	B —41316	Support Bracket (Bearing)
	B —41315	Sprocket Assembly (Driver)
	W —40909	Spring Washer (Shaft)
	W —31840A	Snap Spring (Shaft)
	W —41317	Lower glass Support Bracket
	W —41318	Upper glass Support Bracket R-H
	W —41319	Upper glass Support Bracket L-H
	W - 41320	Drive Chain
	W —41743	Chain Tube up Spring
28	MG25—37103	Battery Cable Assembly
29	G9 —35896	Speaker Cable
30	W —37624	Fuse (4 Amp.)
	G2 —33399	Fuse Panel Assembly
	W —33310A	Fuse Cover
	W —34223	Fuse Cover Insulator
	W — 4072	Thumb Screw (Cover)
31	W —21964	Resistor 165 Ohm ½W. Flexible
32	W —21452	Resistor 1100 Ohm ½W. Flexible
33	W —27503	Resistor 1400 Ohm ½W. Flexible
34	W —23013	Resistor 2000 Ohm 1½W. Flexible
35	W —37485	Resistor 15,000 Ohm ½W. Car.
36	—33390	Resistor 30,000 Ohm ½W. Car.
37	—37472	Resistor 50,000 Ohm ½W. Car.
38A	—21237A	Resistor 60,000 Ohm ½W. Car.
38B	—21237A	Resistor 60,000 Ohm ½W. Car.
39	—36761	Resistor 40,000 Ohm ½W. Ins.
40	—23403	Resistor 150,000 Ohm ½W. Car.
41	—35930	Resistor 200,000 Ohm ½W. Ins.
42	—23785	Resistor 500,000 Ohm ½W. Car.
43	—21454	Resistor 1 Megohm ½W. Car.
44	—35602	Resistor 1 Megohm ½W. Ins.
45	—37245	Resistor 1.5 Megohm ½W. Car.
46	—36928	Resistor 3 Megohm ½W. Ins.
47A	G88 —28807	Socket Type 15
47B	G88 —28807	Socket Type 15
47C	G88 —28807	Socket Type 15
48	G42 —28807	Socket Type 38
49	G47 —28807	Socket Type 6A7
50	G43 —28807	Socket Type V1B.
	W —27981A	Tube Shield Base
	W —40911	Tube Shield
51	—33PJ-3	Speaker Spec. R-6000 D-1 (Table)
	—41434	Cone Assy. for Above Speaker
	—41454	Output Transformer for Above Speaker
	—41458	Mtg. Ring (Cardboard) for Above Cone
	—43PJ-3	Speaker Spec. R-8000 B-3 (Console)
	—41452	Cone Assy. for Above Speaker
	—41456	Mtg.-Ring (Cardboard) for Above Cone
	—41456	Output Transformer for Above Speaker
52	B —41253A	Band Selector Switch
53	W —41068A	Dial Light Switch
54	G10 —26719	Ant. & Grd. Terminal Assembly
55Z		Tone Control
55Y	32908	On-off Switch
56	—37216	Vibrator
57	G11 —32769	Power Transformer
58	—41252	Volume Control (10,000 Ohm)
59	W —35467	Resistor 220 Ohm ½W. Flexible
	—34903	Battery Clip (+) (Pos.)
	—34904	Battery Clip (-) (Neg.)
	B —40839	Escutcheon
	W —28760B	Escutcheon Pin
	W —41221	Upper Knob (1) Dial Light
	W —41222	Lower Knob (1) Station Select.
	W —41366A	Knob (1) Band Select.
	W —41224	Knob (2) V. C. & T. C

©John F. Rider, Publisher

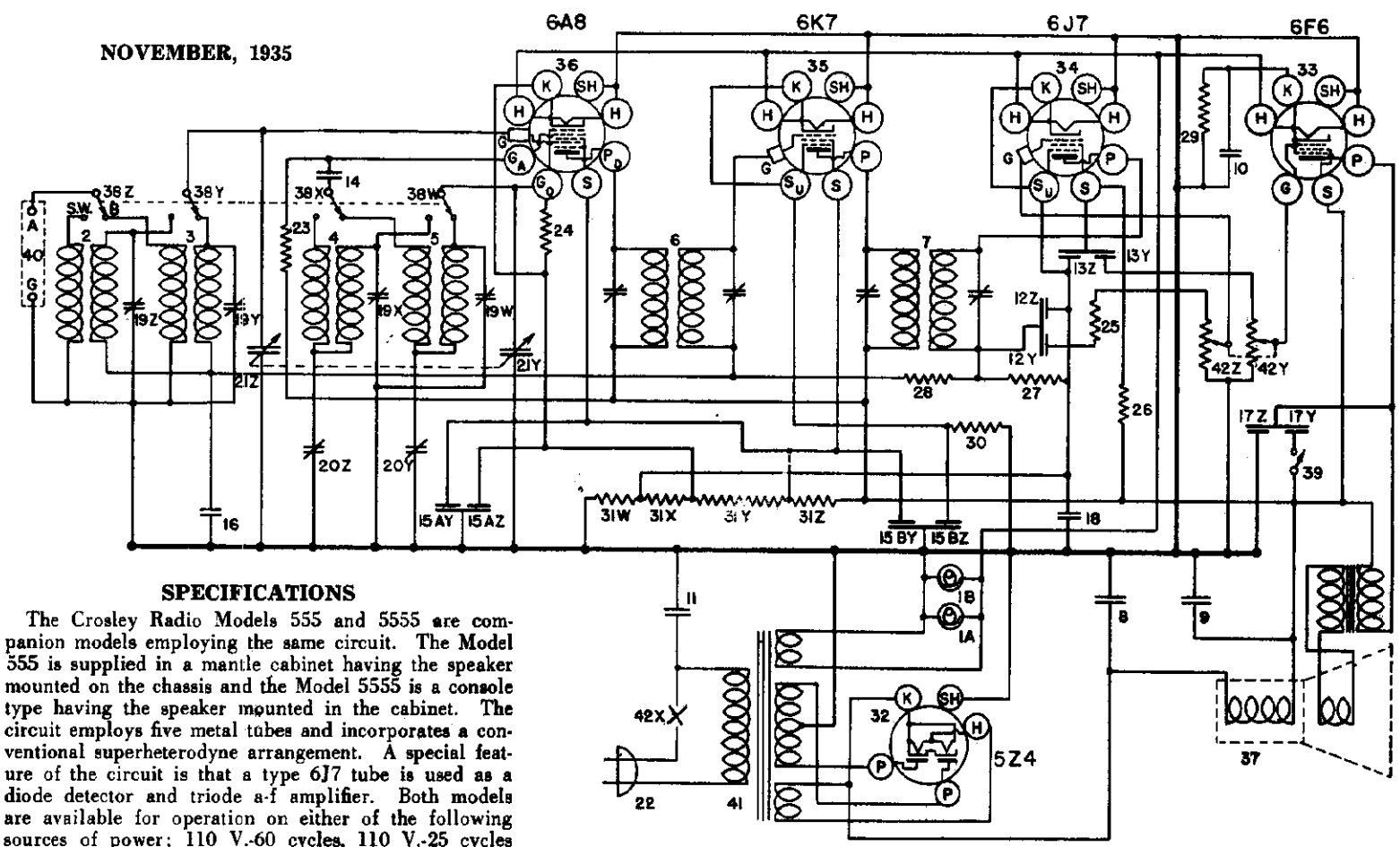

SPECIFICATIONS

The Crosley Radio Models 555 and 5555 are companion models employing the same circuit. The Model 555 is supplied in a mantle cabinet having the speaker mounted on the chassis and the Model 5555 is a console type having the speaker mounted in the cabinet. The circuit employs five metal tubes and incorporates a conventional superheterodyne arrangement. A special feature of the circuit is that a type 6J7 tube is used as a diode detector and triode a-f amplifier. Both models are available for operation on either of the following sources of power; 110 V.-60 cycles, 110 V.-25 cycles or 220 V.-25 cycles. The frequency ranges covered are from 540 to 1710 kilocycles in the broadcast band and from 2350 to approximately 7500 kilocycles in the high frequency band.

WIRING DIAGRAMS—MODELS 555 AND 5555

TUBE SOCKET VOLTAGE READINGS

Type	Where Used	H	P	S	Su	G	K	Ga	Go
6A8	Osc.-Mod.	6.7	295	135	—	0	7.5	155	-10 to -20
6K7	I-F Amplifier	6.7	295	135	10	0	10	—	—
6J7	Det. & A-F Amp.	6.7	1.0	65	4	0	4	—	—
6F6	Output	6.7	295	295	—	0	20	—	—
5Z4	Rectifier	5.0	—	—	—	—	390	—	—

Power Output Approximately 3 Watts. Power Consumption Approximately 85 Watts at 117.5 Volts.

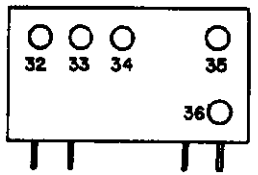

450 KC. I.F

©John F. Rider, Publisher

ALIGNMENT PROCEDURE

All the circuits in this receiver are very accurately adjusted at the factory and normally should need no further adjustment. However, if it is definitely known that an adjustment is necessary the circuits can be properly aligned ONLY with the use of a modulated signal generator and an output meter.

CONNECTING OUTPUT METER

Connect one terminal of the output to the plate and the other terminal to the screen of the 6F6 Output Tube. Be sure the meter is protected from D.C. by connecting a condenser (.1 mfd. or larger—not electrolytic) in series with one of the leads.

1. Tuning I-F Amplifier to 450 Kilocycles.

(a) Connect the output of the signal generator through a .02 mfd. condenser to the top cap of the 6A8 tube, leaving the tube's grid clip in place. Connect the ground lead from the signal generator to the "GND" terminal of the receiver. KEEP THE GENERATOR LEADS AS FAR AS POSSIBLE FROM THE GRID LEADS OF THE OTHER SCREEN GRID TUBES.

(b) Set the station selector so that the tuning condenser plates are completely out of mesh. Turn the volume control knob to the right (ON) and turn the tone control knob to the left (TREBLE).

(c) Turn the band selector switch to the right (High Frequency).

(d) Set the signal generator to 450 kilocycles.

(e) Adjust both trimmers located on top of the 2nd I-F Transformer for maximum output. (Fig. 2A or 2B).

(f) Adjust both trimmers located on top of the 1st I-F Transformer for maximum output.

(g) Check operations (e) and (f) for more accurate adjustments.

ALWAYS USE THE LOWEST SIGNAL GENERATOR OUTPUT THAT WILL GIVE A REASONABLE OUTPUT METER READING.

2. Aligning R-F Amplifier.

(a) When aligning the R-F Amplifier the output lead from the signal generator should be connected through a dummy antenna to the "ANT" terminal of the receiver. *For the broadcast band the dummy antenna should be a .00025 mfd. condenser and for the high frequency band this condenser should be replaced by a 400 ohm carbon resistor (* Non Inductive).

Each band should be shunt aligned, series aligned and then shunt aligned again in the order given. The band selector switch should be set for the band being aligned and the signal generator should be set to the frequency indicated below for each adjustment.

Adjust the "OSC" and "ANT" parallel trimmers (shunt alignment. See Fig. 3) in the order given for maximum output. Tune the station selector to the generator signal for maximum output and then check the the adjustment of the "ANT" trimmer. NOTE: When aligning the high frequency band care should be exercised so that the circuits will be aligned on the fundamental frequency rather than on the image frequency which is approximately 900 kilocycles less than the fundamental. To check on this, increase the output of the signal generator approximately 10 times and try to tune-in the signal both at the generator frequency as indicated on the station selector dial and at approximately 900 kilocycles below the correct frequency. If the circuits have been properly aligned the signal can be tuned-in at both positions but much stronger at the correct dial setting.

To adjust the "series" trimmers (Fig. 2A or 2B) set the signal generator to the frequency indicated below and then tune-in this signal with the station selector for maximum output. Adjust the series trimmer while rocking the tuning condenser back and forth slightly, until no further improvement in output can be obtained.

(b) Signal Generator Frequencies.

	Shunt Alignment	Series Alignment
Broadcast Band	1400 Kc.	600 Kc.
High Frequency Band	6000 Kc.	1500 Kc.

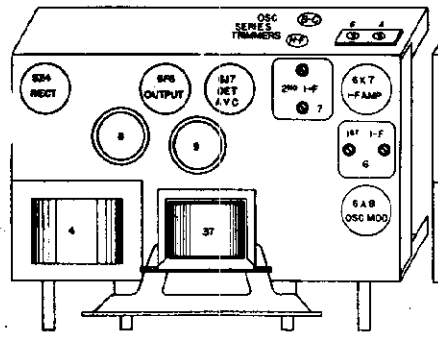

Fig. 2-A. Top View 555

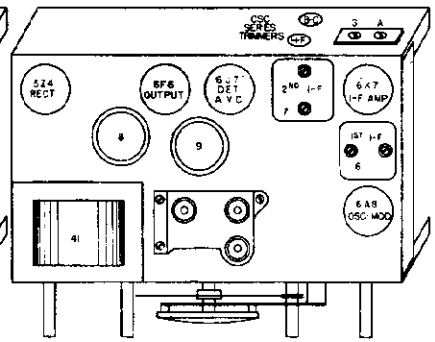

Fig. 2-B. Top View 5555

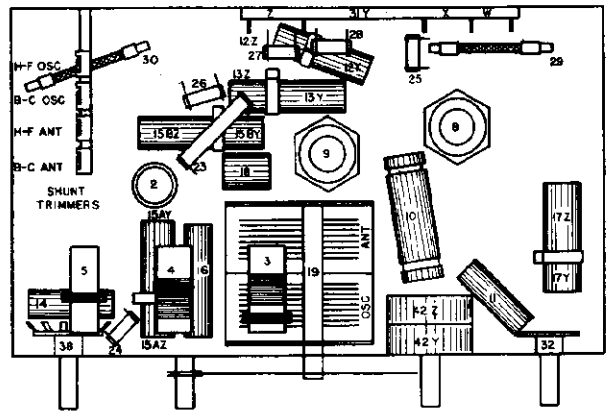

Fig. 3. Bottom View 555 & 5555

PARTS LIST—MODEL 555

Figures in first column refer to parts in Diagrams.

Item No.	Part No.	Description
1A	G6 —27134	Dial Light Assm.
1B	G6 —27134	Dial Light Assm.
2	G32 —32000	Ant. Coil, S. W. B.
3	G31 —32000	Ant. Coil, B. C. B.
4	G65 —32002	Osc. Coil, S. W. B.
5	G66 —32002	Osc. Coil, B. C. B.
6	G71 —32004	1st I. F. Assm.
7	G72 —32004	2nd I. F. Assm.
8	W —36055	Condenser, 35. Mfd. 400 Volt
9	W —36057	Condenser, 40. Mfd. 300 V.
10	W —36931	Condenser, 12 Mfd. 25 V.
11	W —30805	Condenser, 0.01 Mfd. 400 V.
12Z, 12Y	W —30322A	Condenser, 0.00017 Mfd. 200 V.
13Z, 13Y	W —25537A	Condenser, 0.006 Mfd. 200 V.
14	W —23191A	Condenser, 0.001 Mfd. 400 V.
15AZ, 15AY	W —28623	Condenser, 0.03 Mfd. 400 V.
15BZ, 15BY	W —28623	Condenser, 0.02 Mfd. 200 V.
16	W —27216	Condenser, 0.02 Mfd. 200 V.
17Z, 17Y	W —35011	Condenser, 0.05 Mfd. 200 V.
18	W —36541	Condenser, 0.006 Mfd. 400 V.
19Z, 19Y, 19V, 19W	W —37241A	Condenser, 0.03 Mfd. 400 V.
20Z, 20Y, 21Z, 21Y	G29 —33006	Condenser, 0.02 Mfd. 160 V.
	G17 —33001	4 Section Trimmer Cond.
	—37353C	S. W. Osc. Series Padder
	—37158	B. C. Osc. Series Padder
	—37156	Var. Tuning Cond. Gang
	—37157	Dial Assm. Complete

Item No.	Part No.	Description
	—37354	Dial Glass
	—37245	Dial Pointer
	—37246	Pointer Screw
22	B —33006A	Dial Face only
23	—5370A	A. C. Cord & Plug
24	—21237	Resistor, 20,000 Ohm
25	—21875	Resistor, 60,000 Ohm
26	—21455	Resistor, 100,000 Ohm
27	—33344	Resistor, 300,000 Ohm
28	—37245	Resistor, 400,000 Ohm
29	W —25291	Resistor, 1.5 Megohm
30	W —28106	Resistor, 500 Ohm 1½ W. (Flex)
31Z, 31Y, 31X, 31W	W —37246A	Resistor, 500 Ohm ½ W. (Flex)
32	G154—36400	Resistor, 10,000 Ohm Candohm
33	G153—36400	Resistor, 25,000 Ohm Candohm
34	G157—36400	Resistor, 185. Ohm Candohm
35	G151—36400	Resistor, 185. Ohm Candohm
36	G156—36400	Socket, 5Z4
37	331—CL—9	Socket, 6F6
	432—CJ—3M	Socket, 6J7
	G3 —35896	Socket, 6K7
38W To 38Z	—37247	Socket, 6A8
39	W —36184A	Speaker, (555)
40	G1 —26719	Speaker, (5555) Console
41	G12 —28500	Speaker Cable (5555)
	G13 —28500	Band Change Switch
	G14 —28500	Tone Control Switch
42Z, 42Y, 42X	—37395	Ant. & Grd. Terminal
	B —35917	Power Trans. 60 Cy. 110 V.
	D — 28	Power Trans. 25 Cy. 110 V.
	W —31585B	Power Trans. 25 Cy. 220 V.
	W —36355	Volume Control A. F. Grid
		Volume Control Output Grid
		On-Off Switch
		Escutcheon
		Escutcheon Screws (3)
		Knob, V. C. & Dial
		Knob, T. C. & Band Change

©John F. Rider, Publisher

TUBE SOCKET VOLTAGE READINGS

Tube	Where Used	H	P	S	G	Ga	Go
34	R-F Amplifier	2.0	135	65	-2.5	—	—
1A6	Osc.-Modulator	2.0	135	65	-2.5	85	-5 to -20
34	I-F Amplifier	2.0	135	65	-2.5	—	—
1B5	Diode Detector and A-F Amplifier	2.0	60	—	—	—	—
33	Output	2.0	135	135	-1.0	—	—

Power Output Approximately 1.0 Watt.
"A" Battery Drain Approximately .5 Ampere at 2 Volts.
"B" Battery Drain 14 to 20 Milliamperes, Depending Upon Setting of Volume Control.

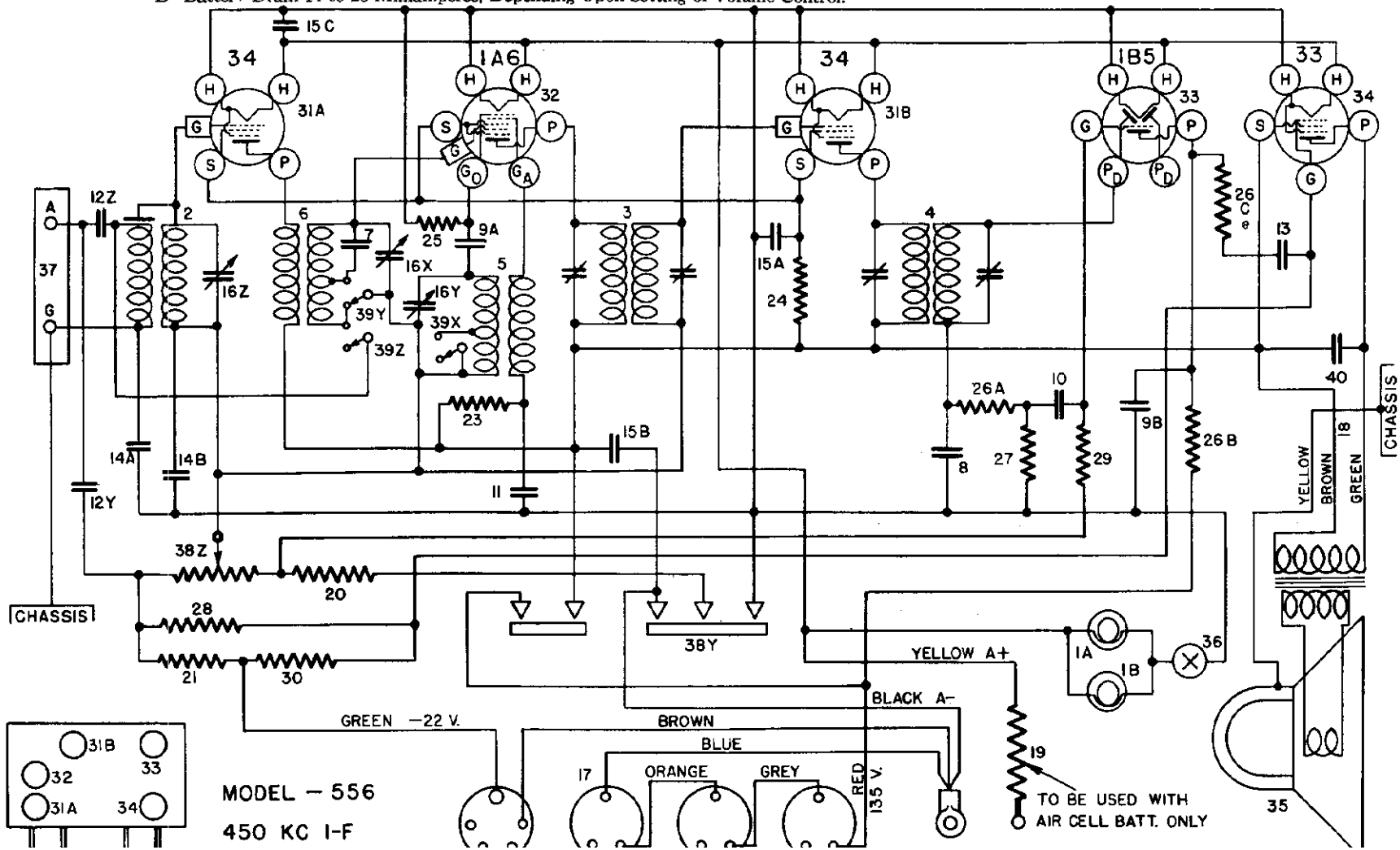

CROSLEY RADIO CORP.

MAY, 1936

MODEL 556
Schematic
Voltage

MODEL 556
Socket, Trimmers
Chassis, Parts
Alignment

CROSLEY RADIO CORP.

ALIGNMENT PROCEDURE

All the circuits in this receiver are very accurately adjusted at the factory and normally should need no further adjustment. However, if it is definitely known that an adjustment is necessary the circuits can best be properly aligned with the use of a modulated signal generator and an output meter.

CONNECTING OUTPUT METER

Connect one terminal of the output meter to the plate and the other terminal to the screen of the 33 Output tube. Be sure the meter is protected from D.C. by connecting a condenser (.1 mfd. or larger—not electrolytic) in series with one of the leads.

1. Tuning I-F Amplifier to 450 Kilocycles.

(a) Connect the output of the signal generator through a .02, or larger, mfd. condenser to the top cap of the 1A6 Osc-Mod tube, leaving the tube's grid clip in place. Connect the ground lead from the signal generator to the "GND" terminal of the receiver. KEEP THE GENERATOR LEADS AS FAR AS POSSIBLE FROM THE GRID LEADS OF THE OTHER SCREEN GRID TUBES.

(b) Set the station selector so that the tuning condenser plates are completely out of mesh. Turn the volume control knob to the right (ON).

(c) Turn the band selector switch to the left (High Frequency).

(d) Set the signal generator to 450 kilocycles.

(e) Adjust both trimmers located on top of the 2nd I-F transformer for maximum output. Fig. 2.

(f) Adjust both trimmers located on top of the 1st I-F transformer for maximum output.

(g) Check operations (e) and (f) for more accurate adjustments.

ALWAYS USE THE LOWEST SIGNAL GENERATOR OUTPUT THAT WILL GIVE A REASONABLE OUTPUT METER READING.

2. Aligning R-F Amplifier.

(a) Connect the output lead from the signal generator through a .00025 mfd. condenser to the "ANT" terminal of the receiver.

(b) Set the signal generator to 1400 kilocycles.

(c) Turn the band selector switch to the right (Broadcast Band).

(d) Adjust the station selector to 140 on the dial.

(e) Adjust the trimmer located on the "OSC" section of the condenser gang for maximum output. Fig. 3.

(f) Adjust the trimmer located on the "R-F" section of the condenser gang for maximum output.

(g) Adjust the trimmer located on the "ANT" section of the condenser gang for maximum output.

(h) Tune the station selector to the generator signal for maximum output.

(i) Repeat operations (f) and (g) for more accurate adjustments.

TUBES AND VOLTAGE LIMITS

The following table gives the functions of the tubes used, together with the voltage readings between the tube socket contacts and the negative side of the "A" battery circuit. Voltage readings should be taken with a 1000 ohm per volt, 250 volt voltmeter (except filaments) with receiver in operating condition and the volume control full on and no signal input. The filament voltages should be measured with an accurate low range D.C voltmeter (Approximately 0 to 10 volts). Voltage limits may vary plus or minus 10% of values given.

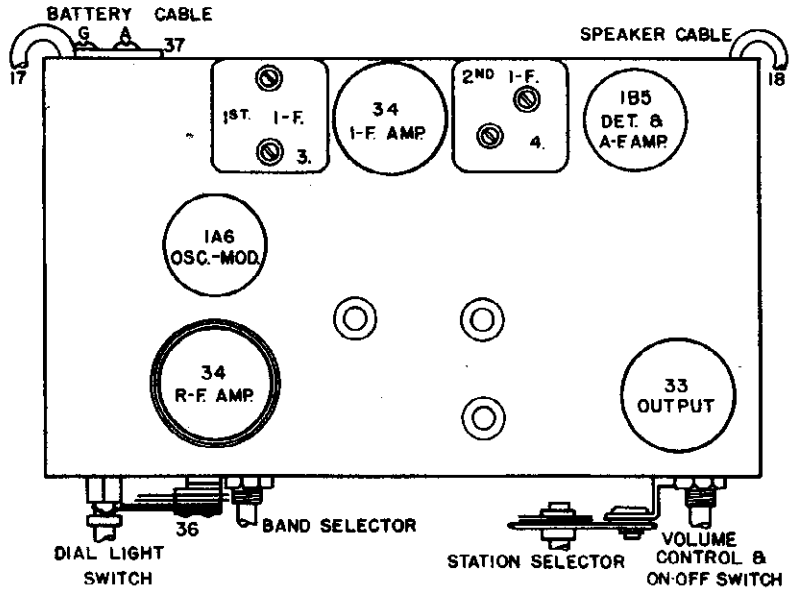

Fig. 2. Top View 556

SPECIFICATIONS

The method of connecting the battery cable to the batteries is shown on the Wiring Diagram. The batteries required are: one two-volt storage battery or air cell battery, three plug-in type 45 volt "B" batteries and one plug-in type 22½ volt "C" battery.

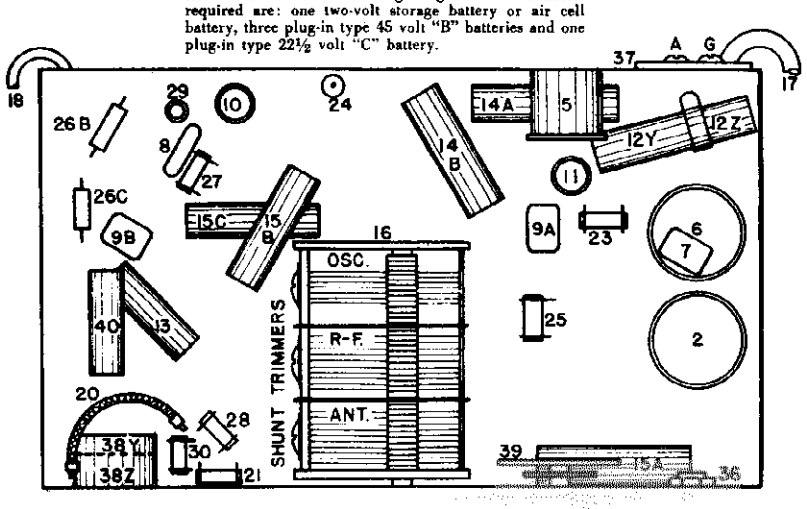

Fig. 3. Bottom View

PARTS LIST—MODEL 556

Figures in first column refer to parts in Diagrams.

Item No.	Part No.	Description
1A	W —37188	Dial Light
1B	W —37188	Dial Light
	G6 —27134	Dial Light Bracket Assembly
2	G76 —32000	Ant. Coil
3	G73 —32004	1st I-F Assembly
4	G38 —32004	2nd I-F Assembly
5	G47 —32002	Osc. Coil
6	G53 —32001	R-F Coil
7	G9 —34002	Condenser .00002 Mfd. (Molded)
8	G2 —34002	Condenser .0001 Mfd. (Molded)
9A	G1 —34002	Condenser .00025 Mfd. (Molded)
9B	G1 —34002	Condenser .00025 Mfd. (Molded)
10	W —28510	Condenser .005 Mfd. 200 V.
11	W —28521	Condenser .02 Mfd. 200 V.
12Z	W —28521	Condenser .02 Mfd. 200 V.
12Y	W —28521	Condenser .02 Mfd. 200 V.
13	W —28778	Condenser .01 Mfd. 400 V.
14A	W —28519	Condenser .1 Mfd. 200 V.
14B	W —28519	Condenser .1 Mfd. 200 V.
15A	W —28519A	Condenser .25 Mfd. 200 V.
15B	W —28519A	Condenser .25 Mfd. 200 V.
15C	W —28519A	Condenser .25 Mfd. 200 V.
16	G43 —32005	Tuning Condenser
	C —41059	Dial Glass
	B 40818B	Pointer Disc
	W 40794	Bearing Bracket
	W —31840A	Snap Ring
	W —40909	Spring Washer
	W —40795A	Hand Shaft
	W —40804	Dial Glass Cushion
	W —40797	Dial Glass Bracket (2)
	W —40798	Support Bracket L.H.
	W —40799	Support Bracket R.H.
	W —41578	Gear Spring
	W —40793A	Drive Unit
	MG16—40765	Drive Mtg. Bracket
17	C —37396	Battery Cable
18	G6 —35696	Speaker Cable
19	G2 —23300	Resistor .53 Ohm (Air Cell)
20	W —23013	Resistor 2000 Ohm 1½W. Flex.
21	—27121	Resistor 5000 Ohm ½W.
22	NONE	
23	—22196	Resistor 20,000 Ohm ½W.
24	—37377	Resistor 20,000 Ohm 1W.
25	—34019	Resistor 75,000 Ohm ½W.
26A	—35601	Resistor 300,000 Ohm ½W.
26B	—35601	Resistor 300,000 Ohm ½W.
26C	—35601	Resistor 300,000 Ohm ½W.
27	—21454	Resistor 1 Megohm ½W.
28	—34883	Resistor 2 Megohm ½W.
29	—26577	Resistor 3 Megohm ½W.
30	—26578	Resistor 5 Megohm ½W.
31A	G31 —28807	Socket Type—31
31B	G31 —28807	Socket Type—34
32	G55 —28807	Socket Type—1A6
33	G41 —28807	Socket Type—1B5
34	G36 —28807	Socket Type—33
	W —26973B	Tube Shield Base
	W —26974B	Tube Shield
35	—41056	Speaker (Table) 31 P. J. 3
	—41390	Speaker (Console) 41 P. J. 3
36	W —41068	Dial Light Switch
37	G1 —26719	Ant. & Grd. Terminal Assembly
38Z		Volume Control (10,000 Ohm)
38Y	—41089	Battery Switch
39	—37106A	Band Selector Switch
40	W —35758	Condenser .008 Mfd. 400 V.
	B —40839A	Escutcheon Ring
	W —28760B	Escutcheon Pin
	W —31585C	Knob (Large)
	W —36355A	Knob (Small)
	W —25025B	Osc. Coil Shield
	W —21541	Retaining Ring
	W —25200	Coil Socket
	W —26891	Insulating Washer
	W —30802A	R-F & Ant. Coil Shield
	W —30026A	Retaining Ring
	W —37164	Insulating Washer

©John F. Rider, Publisher

CROSLEY RADIO CORP.

MODEL 605
Schematic
Voltage

NOVEMBER, 1935

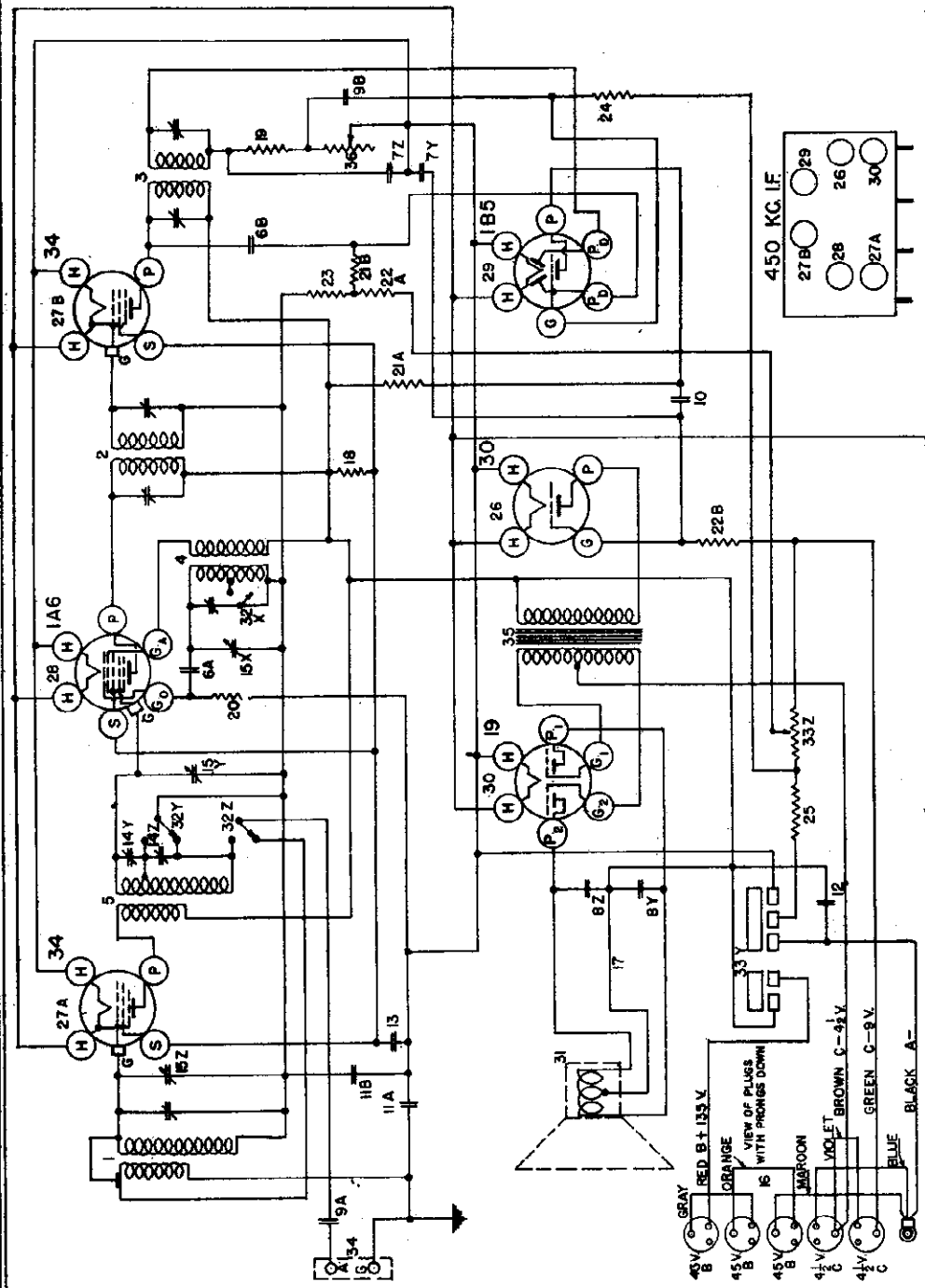

FIG. 1—WIRING DIAGRAM—MODEL 605

SPECIFICATIONS

The Crosley Model 605 radio is a six-tube superheterodyne receiver designed for operation from batteries. The method of connecting the battery cable to the batteries is shown on the Wiring Diagram. The batteries required are: one two-volt storage battery or air cell battery, three plug-in type 45 volt "B" batteries and two plug-in type 4½ volt "C" batteries. The sensitivity control will enable the operator to control the sensitivity and apparent selectivity of the receiver. When tuning for weak stations turn the control to the right. When the control is turned toward the left it will decrease the sensitivity, increase the apparent selectivity and decrease the "B" battery drain.

The frequency ranges covered are from 540 to 1575 kilocycles in the broadcast band and from 1565 to 3800 kilocycles in the high frequency band.

TUBE SOCKET VOLTAGE READINGS

Tube	Where Used	H	P	S	G	Ga	Go
34	R-F Amplifier	2.0	135	55	-1.5	—	—
1A6	Osc.-Mod.	2.0	135	55	-1.5	135	-5 to -10
34	I-F Amplifier	2.0	135	55	-.5	—	—
1B5	Diode Detector and A-F Amplifier	2.0	75	—	-.5	—	—
30	A-F Amplifier	2.0	135	—	-3.0	—	—
19	Double Tri. Output	2.0	135	—	-1.0	—	—

Power Output Approximately 2.5 Watts.
"A" Battery Drain Approximately .56 Amperes at 2 Volts.
"B" Battery Drain 12 to 30 Milliamperes, Depending Upon Setting of Volume and Sensitivity Controls.

©John F. Rider, Publisher

MODEL 605
Socket, Trimmers

CROSLEY RADIO CORP.

Chassis, Parts
Alignment

CONNECTING OUTPUT METER

Connect the two terminals of the output meter to the two plates of the 19 Output tube. Be sure the meter is protected from D.C. by connecting a condenser (.1 mfd. or larger—not electrolytic) in series with one of the leads.

1. Tuning I-F Amplifier to 450 Kilocycles.

(a) Connect the output of the signal generator through a .02, or larger, mfd. condenser to the top cap of the 1A6 Osc-Mod tube, leaving the tube's grid clip in place. Connect the ground lead from the signal generator to the "GND" terminal of the receiver. KEEP THE GENERATOR LEADS AS FAR AS POSSIBLE FROM THE GRID LEADS OF THE OTHER SCREEN GRID TUBES.

(b) Set the station selector so that the tuning condenser plates are completely out of mesh. Turn the volume control and the sensitivity control knobs to the right (ON).

(c) Turn the band selector switch to the left (High Frequency).

(d) Set the signal generator to 450 kilocycles.

(e) Adjust both trimmers located on top of the 2nd I-F transformer for maximum output. Fig. 2.

(f) Adjust both trimmers located on top of the 1st I-F transformer for maximum output.

(g) Check operations (e) and (f) for more accurate adjustments.

ALWAYS USE THE LOWEST SIGNAL GENERATOR OUTPUT THAT WILL GIVE A REASONABLE OUT PUT METER READING.

2. Aligning R-F Amplifier.

(a) Connect the output lead from the signal generator through a .00025 mfd. condenser to the "ANT" terminal of the receiver.

(b) Set the signal generator to 1400 kilocycles.

(c) Turn the band selector switch to the right (Broadcast Band).

(d) Adjust the station selector to 140 on the dial.

(e) Adjust the trimmer located on the "OSC" section of the condenser gang for maximum output. Fig. 3.

(f) Adjust the "R-F" trimmer condenser, No. 14Z, Fig. 2, for maximum output.

(g) Adjust the trimmer located on the "ANT" section of the condenser gang for maximum output.

(h) Tune the station selector to the generator signal for maximum output.

(i) Repeat operations (f) and (g) for more accurate adjustments.

(j) Turn the band selector switch to the left (High Frequency Band).

(k) Set the signal generator to 3500 kilocycles.

(l) Adjust the station selector ot 3.5 on the dial.

(m) Adjust the "R-F" trimmer condenser, No. 14Y. Fig. 2, for maximum output.

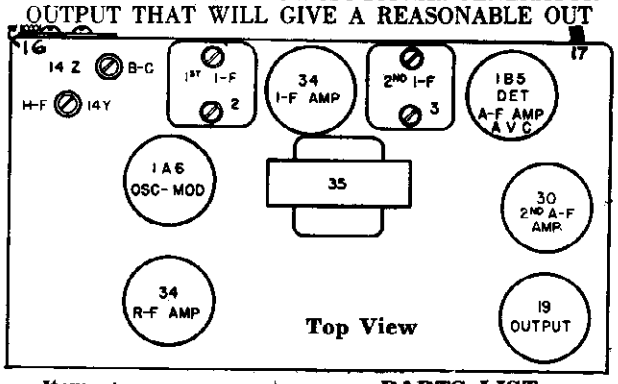

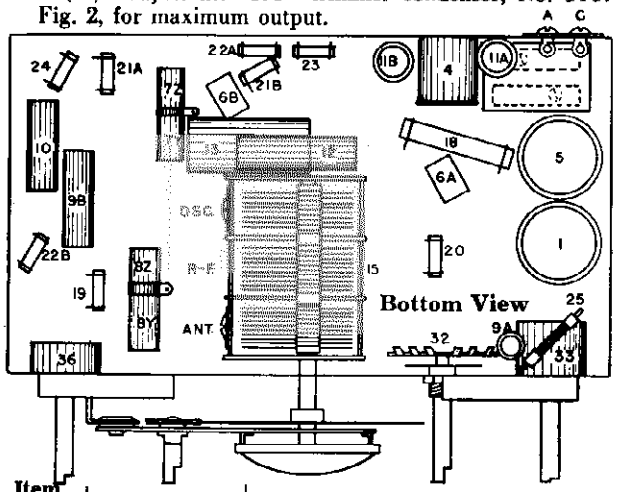

Figures in first column refer to parts in Diagrams.

PARTS LIST

Item No.	Part No.	Description
1	G76—32000	Ant. Coil only
	W —30802A	Coil Shield
	W —30026A	Retaining Ring
2	G48—32004	1st I. F. Assm.
3	G69—32004	2nd I. F. Assm.
4	G47—32002	Osc. Coil only
	W —25025B	Coil Shield
	W —25200	Coil Socket
	W —26891	Insulator Ring
	W —21541C	Retaining Ring
5	G53—32001	R. F. Coil only
	W —30802A	Coil Shield
	W —30026A	Retaining Ring
6A	G2 —34002	Condenser, 0.0001 Mfd.
6B	G2 —34002	Condenser, 0.0001 Mfd.
7Z, 7Y	W —26152A	Condenser, 0.0001 Mfd. / Condenser, 0.00015 Mfd.
8Z, 8Y	W —31158	Condenser, 0.006 Mfd. 400 V. / Condenser, 0.006 Mfd. 400 V.
9A	W —30323	Condenser, 0.01 Mfd. 200 V.
9B	W —30323	Condenser, 0.01 Mfd. 200 V.
10	W —28621	Condenser, 0.02 Mfd. 200 V.
11A	W —24049B	Condenser, 0.1 Mfd. 200 V.
11B	W —24049B	Condenser, 0.1 Mfd. 200 V.
12	W —29910A	Condenser, 0.25 Mfd. 200 V.
13	W —30321A	Condenser, 1.0 Mfd. 160 V.
14Z, 14Y, 15Z, 15Y, 15X	G22—33009	Condenser, B. C. Trimmer R. F. / Condenser, H. F. Trimmer R. F.
	G42—33002	3 Section Tuning Cond. Gang
	—36148B	Dial Drive Assm.
	W —36160D	Dial Drive Mtg. Bracket
	B —36151A	Dial Face
	—37156	Pointer
	—37157	Pointer Screw

Item No.	Part No.	Description
	—37158	Dial Glass
16	C —37106B	Battery Cable
17	W —31008	Speaker Cable
18	— 5370A	Resistor, 20,000 Ohm 1 W.
19	—21453	Resistor, 40,000 Ohm ¼ W.
20	—21237A	Resistor, 60,000 Ohm ¼ W.
21A	—23403	Resistor, 150,000 Ohm ¼ W.
21B	—23403	Resistor, 150,000 Ohm ¼ W.
22A	—23785	Resistor, 500,000 Ohm ¼ W.
22B	—23785	Resistor, 500,000 Ohm ¼ W.
23	—21454	Resistor 1. Megohm ¼ W.
24	—26577	Resistor, 3. Megohm ¼ W.
25	W —21452	Resistor, 1100. Ohm Flex ¾ W.
26	G9 —28807	Socket, 30
27A	G31—28807	Socket, 34
27B	G31—28807	Socket, 34
28	G55—28807	Socket, 1A6
29	G91—28807	Socket, 1B5
30	G44—28807	Socket, 19
	W —26973B	Shield Base (1)
	W —26974B	Tube Shield (1)
31	—42MS4	Speaker, Console Model
	—32MS4	Speaker, Table & Conolette
32Z, 32Y, 32X	—37108A	Band Change Switch
33Z, 33Y	W —37109A	Sensitivity Control / On-Off Switch
34	G1 —26719	Ant. Gnd. Terminal
35	G26—24628	Audio Transformer
36	—37110A	Volume Control
37	G3 —23300	Resistor, .372 Ohm (Air Cell)
	B —35917	Escutcheon
	D —28	Escutcheon Screw (3)
	W —37339	Knob (Large) (2)
	W —37341	Knob (Small) (2)

MODEL 615, Cruiser
Schematic

CROSLEY RADIO CORP.

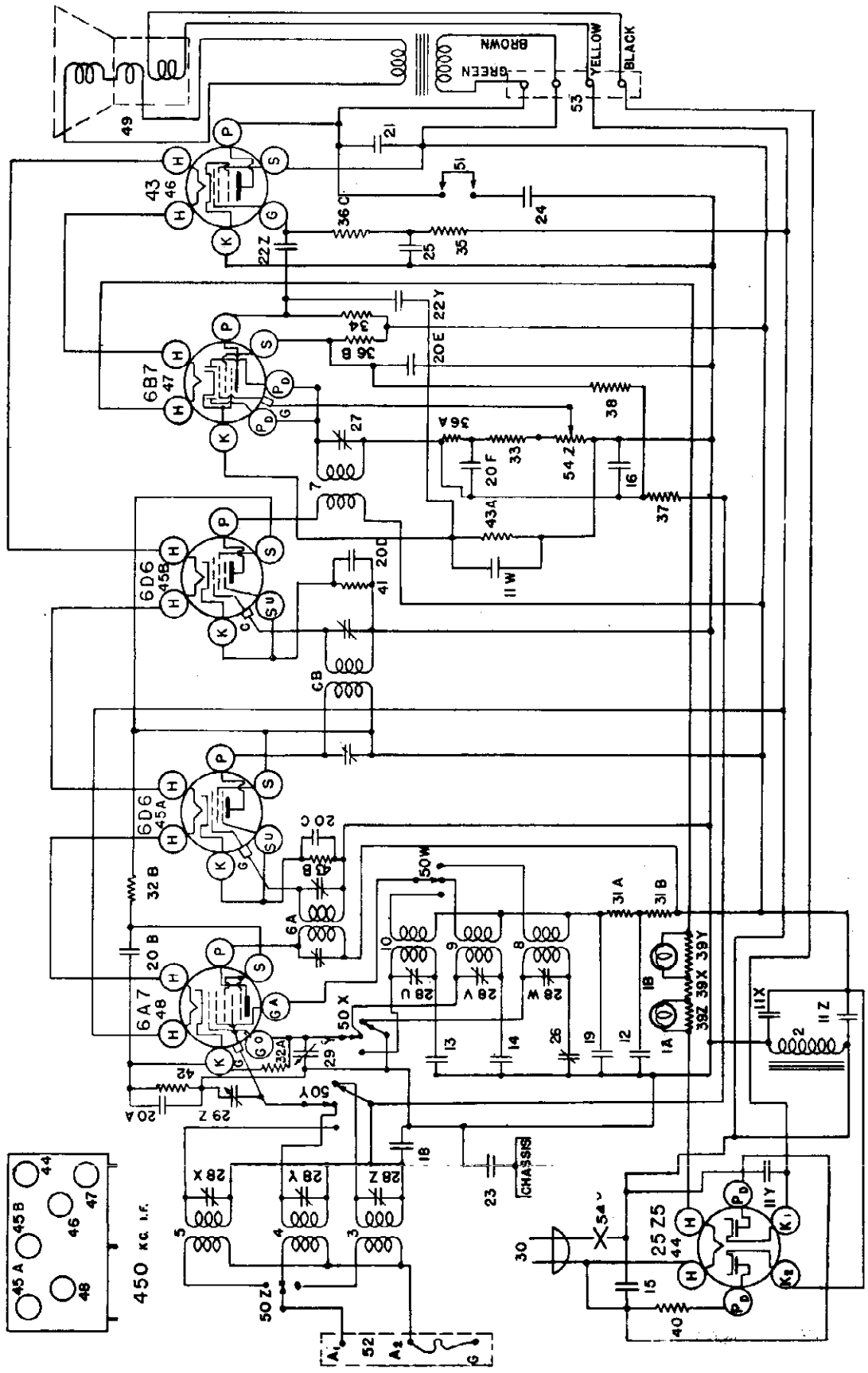

OCTOBER 1935

©John F. Rider, Publisher

©John F. Rider, Publisher

TUBE SOCKET VOLTAGE READINGS

Tube	Function	H	P	S	Su	G	K	Gc	Ga
6A7	Osc.Mod.	6.5	95	45	—	0	3.0	-5	80
6D6	1st I. F.	6.5	95	95	3.5	0	3.5	—	—
6D6	2nd I. F.	6.5	95	95	3.5	0	3.5	—	—
6B7	Det. & A. F.	6.5	25	26	—	—	1.5	—	—
43	Output	26.0	90	95	—	-20	0	—	
25Z5	Rectifier	26.0	117.5 A. C.						

Measured on 117.5 Volt A. C. Line.

Power Consumption Approximately 60 Watts.

ALIGNMENT PROCEDURE

All the circuits in the receiver are very accurately adjusted at the factory and should need no further adjustment. However, if it is definitely known that an adjustment is necessary the circuits can be properly aligned only with the use of a modulated signal generator and an output meter.

Connecting Output Meter.

Connect one terminal of the output meter to the plate and the other terminal to the screen of the 43 output tube. Looking at the bottom of the tube with the filament prongs toward you the plate prong will be the first to the left of the filaments and the screen prong will be next to the plate prong. Be sure the meter is protected from D. C. by connecting a condenser (.1 mfd. or larger —not electrolytic) in series with one of the leads.

1. Peaking I. F. Stages at 450 Kilocycles.

(a) Connect the output of the signal generator through a .02 mfd. condenser to the grid cap of the 6A7 tube, leaving the tube's grid clip in place. Connect the ground lead from the signal generator to the receiver chassis. KEEP THE GENERATOR OUTPUT LEAD AS FAR AS POSSIBLE FROM THE OTHER S. G. TUBES.

(b) Turn the tuning condenser rotor plates until they are completely meshed.

(c) Turn the band selector switch to the short wave band (extreme left hand position).

(d) Set the signal generator to 450 kilocycles.

(e) Adjust the trimmer for the 3rd I. F. transformer (Item No. 27, Fig 2) for maximum output.

(f) Adjust both trimmers located on top of the 2nd I. F. transformer for maximum output.

(g) Adjust both trimmers located on top of the 1st I. F. transformer for maximum output.

(h) Using the lowest signal generator output that will give a reasonable scale deflection on the output meter repeat operations (e) (f) and (g) as many times as necessary to obtain the maximum output.

2. Peaking R. F. Circuits—Broadcast Band (540 to 1760 K. C.)

(a) Connect the output of the signal generator through a .00025 mfd. condenser to the "Ant" terminal of the receiver.

(b) Turn the tuning condenser rotor plates until they are COMPLETELY OUT OF MESH.

(c) Turn the band selector switch to the broadcast band (extreme right hand position).

(d) Set the signal generator at 1720 kilocycles.

(e) Adjust the oscillator parallel trimmer (broadcast band) for maximum output. (Fig. 2).

(f) Set the signal generator at 1400 kilocycles.

(g) Tune-in the 1400 kilocycles signal with the station selector.

(h) Adjust the antenna parallel trimmer (broadcast band) for maximum output.

(i) Using the lowest signal generator output that will give a reasonable output meter reading, repeat operations (g) and (h) until no further increase in output can be obtained.

(j) Set the signal generator to 600 kilocycles.

(k) Tune-in the 600 kilocycle signal with the station selector in the region of 60 on the dial, for maximum reading on the output meter.

(l) Adjust the oscillator series trimmer, (Fig. 2) while rocking the condenser gang plates back and forth slightly, until no further increase in output can be obtained.

(m) Repeat operations (g) and (h) for more accurate adjustments.

3. Peaking R. F. Circuits—Police Band (1650 to 4750 K. C.)

(a) Turn the band selector switch to the police band (middle position).

(b) Set the signal generator to 4000 kilocycles. (4.0 megacycles).

(c) Turn the station selector to 4 on the police band.

(d) Adjust the oscillator parallel trimmer (P. Band) for maximum output.

(e) Adjust the antenna parallel trimmer (P. Band) for maximum output.

4. Peaking R. F. Circuits—Short Wave Band (5.3 to 15 Meg.)

(a) Replace the .00025 mfd. condenser which is being used in series with the output lead of the signal generator with a 400 ohm carbon resistor.

(b) Turn the band selector switch to the short wave band (left hand position).

(c) Set the signal generator to 15 megacycles.

(d) Close the Oscillator parallel trimmer (S-W Band) and then open three turns.

(e) Close the Antenna parallel trimmer (S-W Band) and then open ½ turn.

(f) Turn the station selector to 15 on the dial (S-W Band).

(g) Peak the oscillator parallel trimmer (S-W Band) on the FIRST signal heard when closing the condenser. In making this adjustment care should be taken not to use too much output from the signal generator to avoid setting the oscillator circuit on the wrong frequency.

NOTE: Check on the adjustment of the S-W Band oscillator parallel trimmer as follows:

1. Increase the signal generator output not more than ten times.

2. Try to tune-in the 15 megacycles signal with the station selector at approximately 14 and on the dial.

3. If the 15 megacycle signal can be heard at approximately 14 and 15 both on the dial the oscillator parallel trimmer has been aligned on the correct frequency. It should be noted, however, that the signal tuned in at 15 on the dial should be much stronger than the signal heard at 14. If this condition is not found it will be necessary to repeat operation (g).

(h) Reduce the output of the signal generator to the previous output and retune the station selector to 15 megacycles at 15 on the dial.

(i) Adjust the antenna parallel trimmer (S-W Band) for maximum output, then retune the station selector for maximum output.

(j) Repeat the two operations in (i) as many times as necessary to obtain the maximum output.

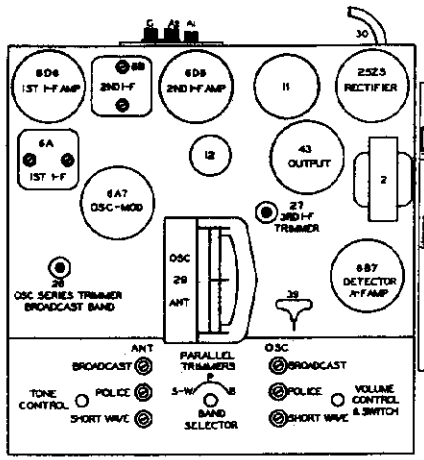

Fig. 2—Top View

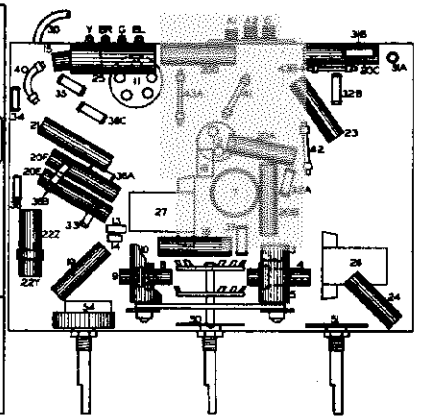

Fig. 3—Bottom View

PARTS LIST—MODEL 615

Figures in first column refer to parts shown in diagrams.

Item No.	Part No.	Description
1A	G4 —27134	Dial Light Socket
1B	G4 —27134	Dial Light Socket
2	G3 —28859	Choke, 9 Henry
3	G39—32000	Ant. Coil B. C. Band
4	G43—32000	Ant. Coil P. Band
5	G56—32000	Ant. Coil S. W. Band
6A	G43—34004	1st I. F. Trans.
6B	G44—34004	2nd I. F. Trans.
7	G13—32004	3rd I. F. Trans.
8	G34—32002	Osc. Coil B. C. Band
9	G35—32002	Osc. Coil P. Band
10	G32—32002	Osc. Coil S. W. Band
11Z	W —31992	Condenser, 25 Mfd. 125 Volt
11Y		Condenser, 8 Mfd. 125 Volt
11X		Condenser, 16 Mfd. 100 Volt
11W		Condenser, 10 Mfd. 25 Volt
12	W —35980	Condenser, 5 Mfd. 75 Volt
13	G12—34000	Condenser, 0.004725 Mfd.
14	G7 —34000	Condenser, 0.00145 Mfd.
15	W —30805	Condenser, 0.01 Mfd. 400 Volt
16	G2 —34002	Condenser, 0.0001 Mfd.
17	—	
18	W —32379	Condenser, 0.02 Mfd. 200 Volt
19	W —32378	Condenser, 0.01 Mfd. 400 Volt
20A	W —33621	Condenser, 0.02 Mfd. 200 Volt
20B	W —33621	Condenser, 0.02 Mfd. 200 Volt
20C	W —33621	Condenser, 0.02 Mfd. 200 Volt
20D	W —33621	Condenser, 0.02 Mfd. 200 Volt
20E	W —33621	Condenser, 0.02 Mfd. 200 Volt
20F	W —33621	Condenser, 0.02 Mfd. 200 Volt
21	W —30323	Condenser, 0.01 Mfd. 200 Volt
22Z	W —30322A	Condenser, 0.006 Mfd. 200 Volt
22Y		Condenser, 0.00017 Mfd. 200 Volt
23	W —24049B	Condenser, 0.1 Mfd. 200 Volt
24	W —36072	Condenser, 0.035 Mfd. 200 Volt
25	W —29910A	Condenser, 0.25 Mfd. 200 Volt
26	G10—33005	Trimmer Condenser
27	G11—33005	Trimmer Condenser
28Z	W —35951	3 Gang Trim. Cond. 3-25 Mmf.
28Y		
28X		
28W		
28V	W —35951	3 Gang Trim. Cond. 3-25 Mmf.
28U		
29Z	G13—33001	2 Gang Var. Tuning Condenser
29Y		
	G29—32086	Dial Drive Assembly
	W —37198	Dial Hand.

Item No.	Part No.	Description
30	B —33906A	Cable & Plug (Power Supply)
31A	—31094	Resistor, 4,500 Ohms
31B	—31094	Resistor, 4,500 Ohms
32A	—21453	Resistor, 40,000 Ohms
32B	—21453	Resistor, 40,000 Ohms
33	—21237A	Resistor, 60,000 Ohms
34	—23403	Resistor, 150,000 Ohms
35	—21455	Resistor, 300,000 Ohms
36A	—23765	Resistor, 500,000 Ohms
36B	—23765	Resistor, 500,000 Ohms
36C	—23765	Resistor, 500,000 Ohms
37	—21454	Resistor, 1 Megohm
38	—33490	Resistor, 10 Megohm
39Z	W —35979	Resistor, 26.7 Ohms
39Y		Resistor, 26.7 Ohms
39X		Resistor, 80 Ohms
40	W —24537	Resistor, 60 Ohms
41	W —28589	Resistor, 350 Ohms
42	W —22514	Resistor, 750 Ohms
43A	W —27503	Resistor, 1400 Ohms
43B	W —27503	Resistor, 1400 Ohms
44	G51—28807	Socket 25Z5
45A	G75—28807	Socket 6D6
45B	G75—28807	Socket 6D6
46	G30—28807	Socket 43
47	G48—28807	Socket 6B7
48	G47—28807	Socket 6A7
	W —35772	Tube Shield Half
	W —35773	Tube Shield Cap
	W —35774	Tube Shield Base
49	314 BL	Speaker, (Table Model)
	414 CL	Speaker, (Console Model)
50Z To 50W	B —35935	Band Change Switch
51	W —35937	Tone Control Switch
52	G27—29719	Ant. Gnd. Terminal Board
53	G5 —31128	Speaker Terminal Board
54Z	38052	Volume Control, 500,000 Ohms
54Y		On-Off Switch
	W —34628	Speaker Terminal Board Cover
	W —34627	Speak. Term. Bd. Cov. Insulator
	W —37940	Knob (Pointer Notch)
	W —37239	Knob
	W —33528C	Escutcheon
	W —32694	Escutcheon Gasket
D	—29	Escutcheon Screws
W	—36312	Band Change Plate

CROSLEY RADIO CORP.

MODEL 616
Schematic
Voltage, Trimmer

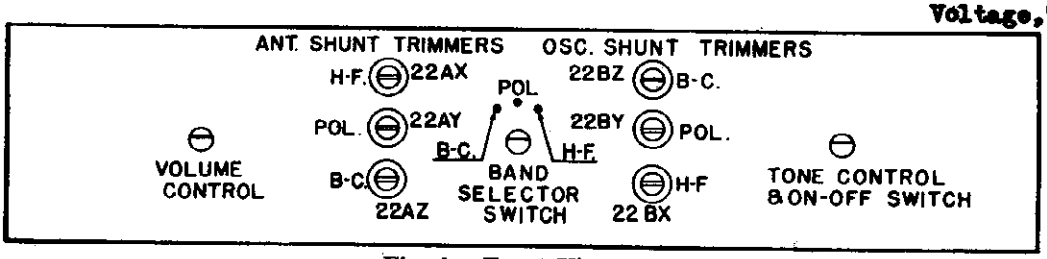

Fig. 4 Front View

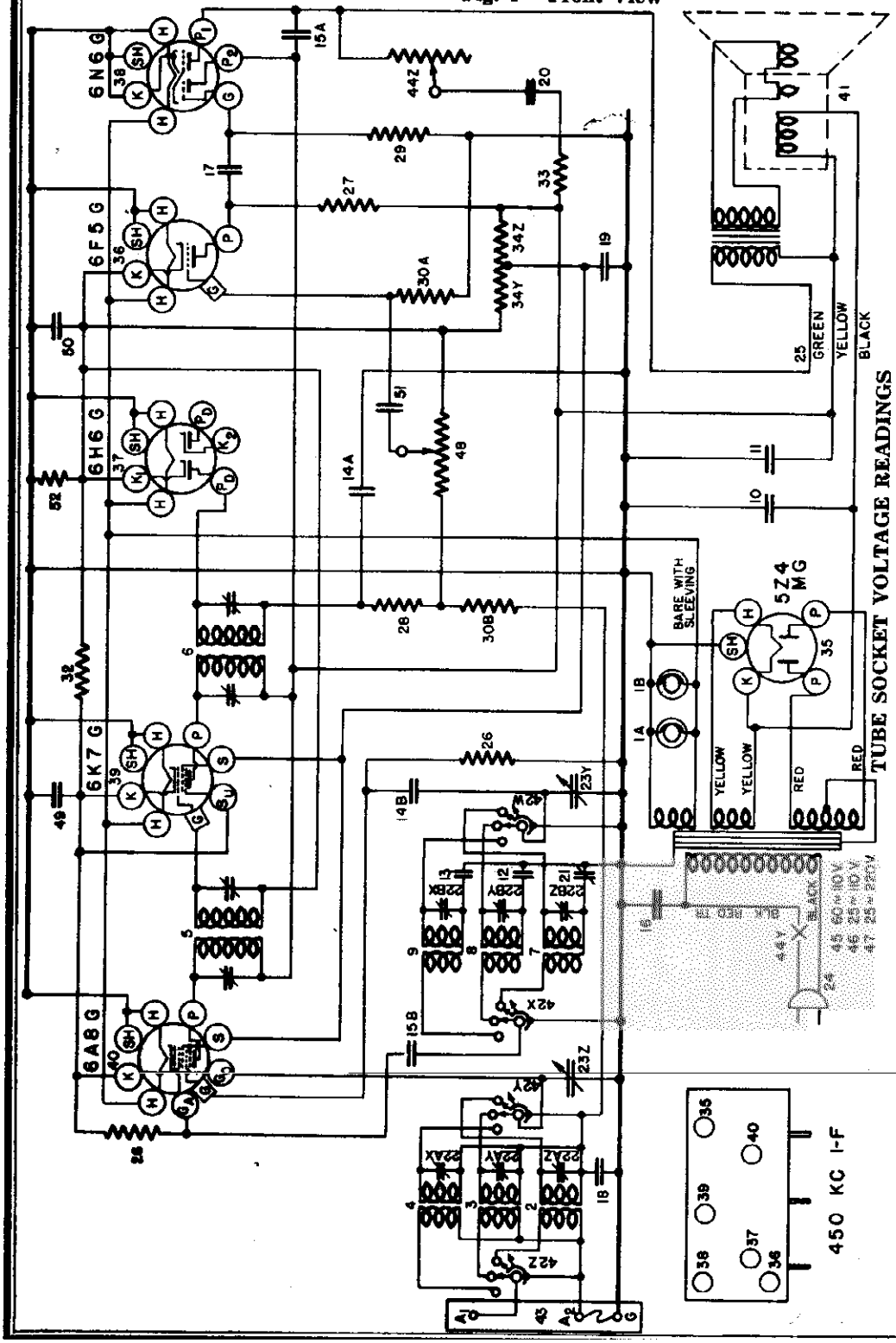

TUBE SOCKET VOLTAGE READINGS

Tube	Function	H	P	P_2	S	Su	G	K	Ge	Gz
6A8-G	Osc.-Modulator	6.3	240	—	95	—	0	4.5	-5 to -30	115
6K7-G	I-F Amplifier	6.3	240	—	95	4.5	0	4.5	—	—
6H6-G	Diode Detector	6.3	0	—	—	—	0	—	—	—
6F5-G	A-F Amplifier	6.3	150	—	—	—	0	1.5	—	—
6N6-G	Output	6.3	220	240	—	—	0	0	—	—
5Z4-MG	Rectifier	4.9	310	—	—	—	—	—	—	—

MEASURED ON 117.5 VOLT—60 CYCLE POWER SUPPLY.
POWER CONSUMPTION APPROXIMATELY 80 WATTS.
POWER OUTPUT APPROXIMATELY 4 WATTS.

MAY, 1936

MODEL 616
Socket, Trimmers
Chassis, Parts
Alignment

CROSLEY RADIO CORP.

ALIGNMENT PROCEDURE

All the circuits in this receiver are very accurately adjusted at the factory and normally should need no further adjustment. However, if it is definitely known that an adjustment is necessary the circuits can best be properly aligned with the use of a modulated signal generator and an output meter.

CONNECTING OUTPUT METER

Connect the output meter to the two plates of the 6N6 Output Tube. Be sure the meter is protected from D.C. by connecting a condenser (.1 mfd. or larger—not electrolytic) in series with one of the leads.

1. Tuning I-F Amplifier to 450 Kilocycles.

(a) Connect the output of the signal generator through a .02 mfd. condenser to the top cap of the 6A8 tube, leaving the tube's grid clip in place. Connect the ground lead from the signal generator to the "GND" terminal of the receiver. KEEP THE GENERATOR LEADS AS FAR AS POSSIBLE FROM THE GRID LEADS OF THE OTHER SCREEN GRID TUBES.

(b) Set the station selector so that the tuning condenser plates are completely out of mesh. Turn the volume control knob to the right (ON) and turn the tone control knob to the left (TREBLE).

(c) Turn the band selector switch to the High Frequency Band.

(d) Set the signal generator to 450 kilocycles.

(e) Adjust both trimmers located on top of the 2nd I-F Transformer for maximum output.

(f) Adjust both trimmers located on top of the 1st I-F Transformer for maximum output.

(g) Check operations (e) and (f) for more accurate adjustments.

ALWAYS USE THE LOWEST SIGNAL GENERATOR OUTPUT THAT WILL GIVE A REASONABLE OUTPUT METER READING.

Aligning R-F Amplifier.

When aligning the R-F Amplifier the output lead of the signal generator is connected to the "ANT" terminal of the receiver. For the BLUE and RED bands a .00025 mfd. condenser must be connected in series with the output lead of the signal generator and for the high-frequency band a 400 ohm carbon resistor should be used in place of the condenser.

Each band should first be shunt aligned and then series aligned, where provision is made for series alignment (BLUE band). The band selector switch should be set for the band being aligned and the station selector and signal generator should be set to the frequency indicated (c) for each adjustment.

(a) Adjust the "Osc" and "ANT" shunt trimmers in the order given for maximum output. Readjust the station selector slightly so that the generator signal is tuned-in with maximum output and then check the adjustments of the "ANT" trimmers. DO NOT READJUST the "OSC" TRIMMER.

NOTE: When shunt aligning the RED and GREEN bands care must be exercised so that the circuits will be aligned on the correct frequency rather than on the image frequency which is approximately 900 kilocycles less than the fundamental. To check on this, increase the output of the signal generator ten times, or more, and try to tune-in the signal both at the generator frequency as indicated on the station selector dial and at approximately 900 kilocycles less than the correct frequency. If the circuits have been properly aligned the signal can be tuned-in at both positions but much stronger at the correct position.

(b) To align the series trimmer (Item 21, Fig. 2) set the signal generator to the frequency indicated (c) and then tune-in this signal with the station selector for maximum output. To obtain the best adjustment for the series trimmer it will be necessary to rotate the station selector back and forth slightly while adjusting the trimmer for maximum output.

(c) Signal Input Frequencies:

	Shunt Alignment	Series Alignment
American Broadcast Band (BLUE)	1700 Kilocycles	600 Kilocycles
Police Band (RED)	6000 Kilocycles	.....
High-Frequency Band (GREEN)	18000 Kilocycles	.....

SPECIFICATIONS

The Crosley Radio Model 616 is a six tube superheterodyne receiver designed to operate on an ALTERNATING CURRENT power supply. It is designed to use either metal tubes or the equivalent glass tubes with octal bases. If glass tubes are replaced with metal tubes or metal tubes are replaced with glass tubes it will be necessary to completely realign the circuits of the receiver.

It is a three band receiver and the dial is divided into three sections as follows:

BLUE	540-1800 Kilocycles	(American Broadcast Band)
RED	1.8- 6.0 Megacycles	(Police and Amateurs).
GREEN	6.0- 18.0 Megacycles	(High Frequency Bands).

SOCKET VOLTAGES

The tube socket voltages are measured from the tube socket contacts to the chassis with a 1000 ohm per volt, 500 volt D.C. voltmeter (except filaments) with the receiver in operating condition and no signal input. The filament voltages should be measured with an accurate low range A-C voltmeter (Approximately 0-10 volts). Readings may vary plus or minus 10% of values given.

PARTS LIST—MODEL 616

Figures in first column refer to parts in Diagrams.

Item	Part No.		Description
1A	W	—37922	Bulb Dial Light
1B	W	—37922	Bulb Dial Light
	G3	—37965	Dial Light Socket Assembly
2	G104	—32000	Ant. Coil B. C. B.
3	G103	—32000	Ant. Coil Pol. B.
4	G105	32000	Ant. Coil H. F. B.
5	G99	—32004	1st I-F Assembly
6	G100	—32004	2nd I-F Assembly
7	G91	—32002	Osc. Coil B. C. B.
8	G92	—32002	Osc. Coil Pol. B.
9	G93	—32002	Osc. Coil H. F. B.
10	W	—36055	Condenser 35 Mfd. 400 V.
11	W	36067	Condenser 40 Mfd. 300 V.
12	G7	—34007	Condenser 1750Mmfd. Pol. Osc. Series
13	G8	—34007	Condenser 350Mmfd. H.-F. Osc. Series
14A	G2	—34002	Condenser 0.G01 Mfd.
14B	G2	—34002	Condenser 0.0001 Mfd.
15A	W	—35139	Condenser 0.004 Mfd. 400 V.
15B	W	—35139	Condenser 0.004 Mfd. 400 V.
16	W	-30805	Condenser 0.01 Mfd. 400 V.
17	W	—30468	Condenser 0.02 Mfd. 400 V.
18	W	—35936	Condenser 0.05 Mfd. 200 V.
19	W	—24049B	Condenser 0.1 Mfd. 200 V.
20	W	—23688	Condenser 0.1 Mfd. 400 V.
21		—40769	Condenser B-C Osc. Series Trimmer
22AZ to 22AX	W	—35951	3 Section Ant. Shunt Trimmers
22BZ to 22BX	W	-35951	3 Section Osc. Shunt Trimmers
23Z	G21	—33001	2 Section Var. Tuning Cond. Gang.
23Y			
	MG27	—40762	Dial Drive Assembly
	C	—40930	Dial Glass
	W	—40804	Dial Glass Cushion
24	B	-33906A	Power Cord & Plug
25	G3	—35936	Speaker Cable
26		—40757	Resistor 50,000 Ohm, ½ W.
27		—35930	Resistor 200,000 Ohm, ¼ W.
28		—21455	Resistor 300,000 Ohm, ½ W.
29		—23785	Resistor 500,000 Ohm, ½ W.
30A		—36688	Resistor 3 Megohm ½ W.
30B		—36688	Resistor 3 Megohm ½ W.
31		—36952	Resistor 30,000 Ohm, 1 W.
32	W	—21964	Resistor 165 Ohm, ½ W.
33	W	—27503	Resistor 1400 Ohm, ½ W.
34Z	W	—32301	Candohm {10,000 Ohm
34Y			{15,000 Ohm
35	G166	36400	Socket 5Z4
36	G158	—36400	Socket 6F5
37	G155	—36400	Socket 6H6
38	G165	—36400	Socket 6N6
39	G151	—36400	Socket 6K7
40	G156	—36400	Socket 6A8
	W	—40911	Tube Shield
	W	27981A	Tube Shield Base
41		—40971	Speaker Spec. 332-BJ-3
42Z to 42W		—40770	Band Selector Switch
43	G27	—36719	Ant & Gnd. Terminal Board
44Z		—37908	Tone Control (100,000 Ohm)
44Y			On-Off Switch
45	G12	—28500	Power Transformer 60 Cy. 110 V.
46	G13	—28500	Power Transformer 25 Cy. 110 V.
47	G14	—28500	Power Transformer 25 Cy. 220 V.
48		—37967	Volume Control (1 Meg.)
49	W	—29910A	Condenser 0.25 Mfd. 200 V.
50	W	—28621	Condenser 0.02 Mfd. 200 V.
51	W	—35758	Condenser 0.008 Mfd. 400 V.
52	W	—25357	Resistor 75 Ohms, ¾ W.
	B	—40893	Escutcheon Ring
	W	—26760A	Escutcheon Pin
	W	—37339	Knob (3)
	W	—40192B	Knob (1)
	W	—36117	Rubber Mtg. Foot

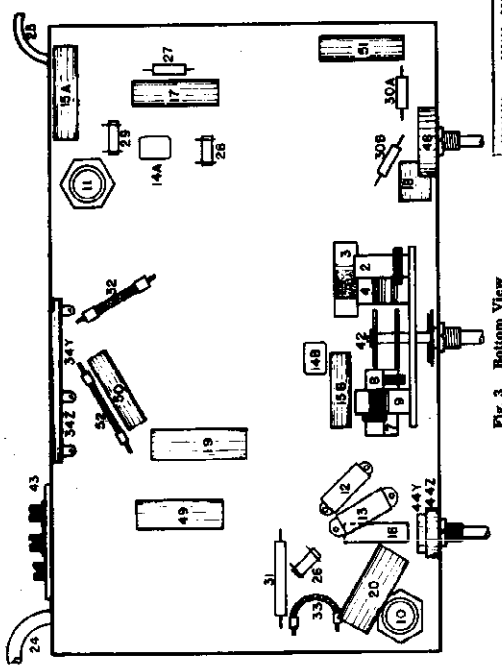

Fig. 3 Bottom View

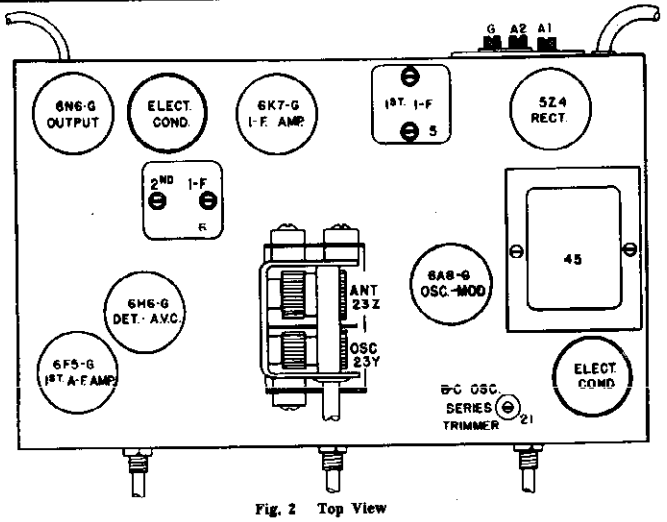

Fig. 2 Top View

©John F. Rider, Publisher

©John F. Rider, Publisher

SPECIFICATIONS

The Crosley Model 626 radio is a six-tube superheterodyne receiver designed to operate on an ALTERNATING CURRENT power supply. It is available with either of the following types of power transformers: 110 volt—60 cycles, 110 volt—25 cycles or 220 volts—25 cycles.

This receiver is designed to use either metal tubes or the equivalent glass tubes with octal bases. If glass tubes are replaced with metal tubes or metal tubes are replaced with glass tubes it will be necessasry to completely realign the circuits of the receiver.

It is a three band receiver and the dial is divided into three sections as follows:

BLUE	540- 1800 Kilocycles	(American Broadcast Band)
RED	1800- 6000 Kilocycles	(Police and Amateurs)
GREEN	5800-18500 Kilocycles	(High Frequency Band)

SOCKET VOLTAGES

The tube socket voltages are measured from the tube socket contacts to the chassis with a 1000 ohm per volt, 500 volt D.C. voltmeter (except filaments) with the receiver in operating condition and no signal input. The filament voltages should be measured with an accurate low range A-C voltmeter (Approximately 0-10 volts). Readings may vary plus or minus 10% of values given.

PARTS LIST—MODEL 626

Figures in first column refer to parts in Diagrams.

Item	Part No.	Description
1A	W —37922	Bulb, Dial Light
1B	W —37922	Bulb, Dial Light
1C	W —37922	Bulb, Indicator Light
2	G92 —32000	Coil, Ant. 6000-18000 Kc.
3	G90 —32000	Coil, Ant. 1800-6000 Kc.
4	G91 —32000	Coil, Ant. 540-1800 Kc.
5	G84 —32002	Coil, Osc. 6000-18000 Kc.
6	G83 —32002	Coil, Osc. 1800-6000 Kc.
7	G82 —32002	Coil, Osc. 540-1800 Kc.
8	G101—32004	Coil, 1st I-F Assm.
9	G102—32004	Coil, 2nd I-F Assm.
10	W —36055	Condenser, 35 mfd., 400 V.
11	W —36057	Condenser, 40 mfd., 300 V.
12	W —40325	Condenser, 50 mfd., 150 V.
13Z, 13Y	W —37778	Condenser, 12 mfd., 25 V.
14	W —30805	Condenser, 01 mfd., 400 V.
15A	W —36541	Condenser, .02 mfd., 160 V.
15B	W —36541	Condenser, .02 mfd., 160 V.
16A	W —32780B	Condenser .05 mfd., 400 V.
16B	W —32780B	Condenser, .05 mfd., 400 V.
17	G1 —34002	Condenser, .00025 mfd., (molded)
18	G6 —34002	Condenser, .000025 mfd., (molded)
19	G2 —34002	Condenser, .0001 mfd., (molded)
20	W —30323	Condenser, .01 mfd., 200 V.
21	W —37988	Condenser, .017 mfd., 200 V.
22A, 22B	W —23142	Condenser, .02 mfd., 400 V.
23	W —27540	Condenser, .02 mfd., 400 V.
24	G5 —34002	Condenser, .00005 mfd., (molded)
25A	W —35936	Condenser, .05 mfd., 200 V.
25B	W —35936	Condenser, .05 mfd., 200 V.
26Z, 26Y	W —31052	Condenser, .004 mfd., 400 V.
27A	W —37954	Condenser, Condenser, .05 mfd., 400 V.
27B	W —37954	Condenser, B-F Ant. Shunt Trim.
28Z		Condenser, B-F Ant. Shunt Trim.
28Y	W —37825A	Condenser, Pol. Ant. Shunt Trim.
28X		Condenser, B-C Ant. Shunt Trim.
28W		Condenser, Pol. Osc. Shunt Trim.
29Z	G31 —33006	Condenser, B-C Osc. Shunt Trim.
29Y		Condenser, Pol. Osc. Series Trim.
30	G17 —34000	Condenser, B-C Osc. Series Trim.
31Z, 31Y	G19 —33001	Condenser, .0053 mfd. B-F Osc.
32	G4 —35696	Condenser, Var. Tuning Gang
33	B —33906A	Cable, Speaker
34Z	—37907	Cable & Plug, Power Supply
34Y		Vol. Cont., 1st A-F Control, 3 Meg.
35Y	—37908	2nd A-F Control, 1 Meg.
35Z		Control, Tone
36	—21455	Switch, On-Off
37A	— 5469A	Resistor, 300,000 Ohm, ½ W.
37B	— 5469A	Resistor, 100,000 Ohm, 1 W.
38A	— 36761	Resistor, 100,000 Ohm, 1 W.
38B	—36761	Resistor, 40,000 Ohm, ¼ W., Insul.
39	—21454	Resistor, 40,000 Ohm, ¼ W., Insul.
40A	—34020	Resistor, 1 Megohm, ¼ W.
40B	—34020	Resistor, 250,000 Ohm, ¼ W.
41A	—37590	Resistor, 250,000 Ohm, ¼ W.
41B	—37590	Resistor, 750,000 Ohm, ¼ W.
42	—36322	Resistor, 750,000 Ohm, ¼ W.
43	—33344	Resistor, 500,000 Ohm, ¼ W.
44	—23403	Resistor, 400,000 Ohm, ¼ W.
45	—37245	Resistor, 150,000 Ohm, ¼ W.
46	—21876	Resistor, 1.5 Megohm, ¼ W.
47	W —22514	Resistor, 10,000 Ohm, ¼ W.
49	—22831	Resistor, 750 Ohm, ½ W., Flex.
50	—21875	Resistor, 15,000 Ohm, ¼ W.
51A	W —28106	Resistor, 100,000 Ohm, ¼ W.
51B	W —28106	Resistor, 500 Ohm, ½ W. Flex.
52Z		Resistor, 500 Ohm, ½ W. Flex.
52Y	—37829A	Resistor, 10,000 Ohm
52X		Resistor, 25,000 Ohm, Candohm
53	G156—36400	Resistor, 60 Ohm
54	G151—36400	Socket 6A8
55	G157 —36400	Socket 6K7
56	G152— 36400	Socket 6J7
57	G165—36400	Socket 6C5
58	G154—36400	Socket 6N6
59	—37916	Socket 524
60	B —37906D	Speaker, Spec. 532-CJ-3
61	G27 —26719	Switch, 2 Sec. Band Selector
62	G15 —28500	Terminal Board, Ant. & Grnd.
	G16 —28500	Transformer, Power 110-60 Cy.
	G17 —28500	Transformer, Power 110-25 Cy.
	W —27981A	Transformer, Power 220-25 Cy.
	—40531	Base, Tube Shield
	W —22334	Belt, Drive
	—40537	Cable, Indicator Control
	MG39—40906	Coupling, Flexible Drive
	C —37894	Dial Assembly, Complete
	C —40929	Escutcheon, Cabinet
	W —40365	Face, Glass Dial
	—40485	Gasket, Escutcheon Felt
	—41145	Hand, Long
	W —37339	Hand, Short
	W —40192B	Knob, 3 required
	B —37898	Knob, 1 required
	W —37909	Lens, Dial
	W —40911	Pulley, Indicator Cable
	W —40570	Shield, Tube
	G3 —37965	Shield, Dial Light
	B —37896A	Socket, Indicator & Dial Light
	B —37897	Spring, Escutcheon Retaining
	—40715	Spring, Dial Lens Retaining
		Mask Dial

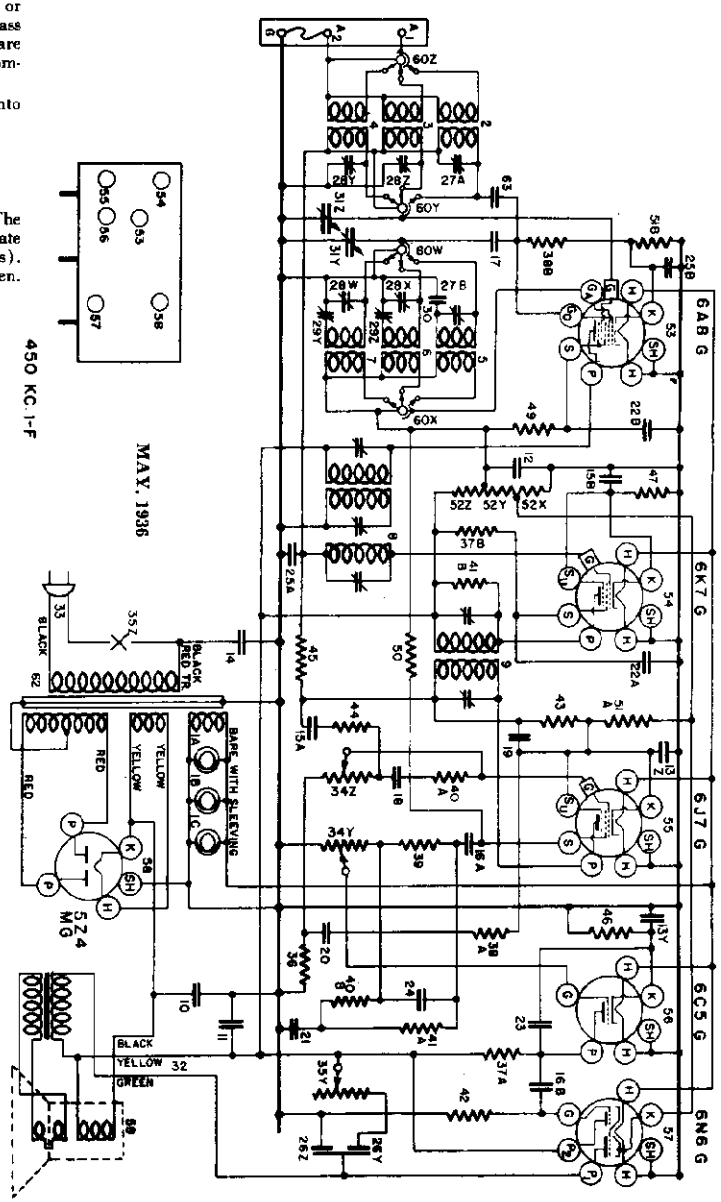

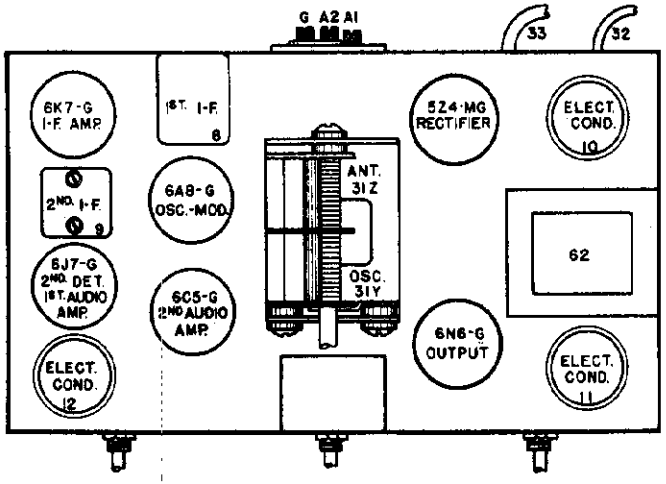

Fig. 2 Top View

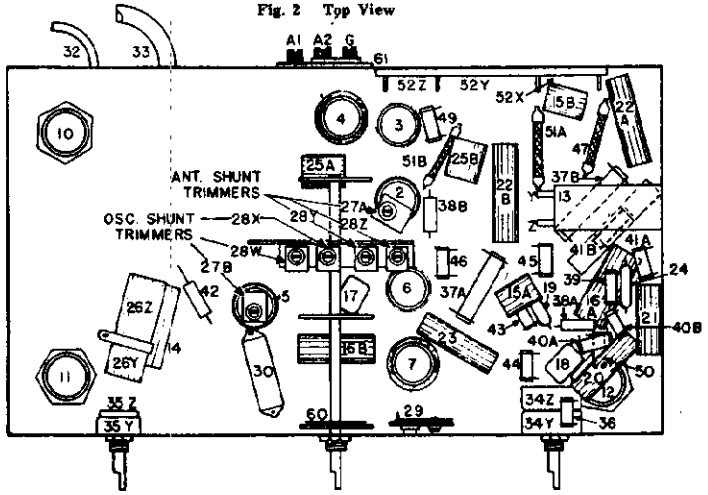

Fig. 3 Bottom View

TUBE SOCKET VOLTAGE READINGS

Tube	Function	H	P	P_1	S	S_2	G	K	G_2	G_3
6A8-G	Osc.-Modulator	6.3	265	—	100	—	0	5.0	0	140
6K7-G	I-F Amplifier	6.3	265	—	120	6.2	0	6.2	—	—
6J7-G	Det. & A-F Amplifier	6.3	0	—	75	2.6	0	2.6	—	—
6C5-G	2nd. A-F Amplifier	6.3	140	—	—	—	0	10.0	—	—
6N6-G	Output	6.3	270	256	—	—	0	2.3	—	—
5Z4-MG	Rectifier	4.9	350	—	—	—	—	—	—	—

MEASURED ON 117.5 VOLT—60 CYCLE POWER SUPPLY.
POWER CONSUMPTION APPROXIMATELY 78 WATTS.
POWER OUTPUT APPROXIMATELY 3 WATTS.

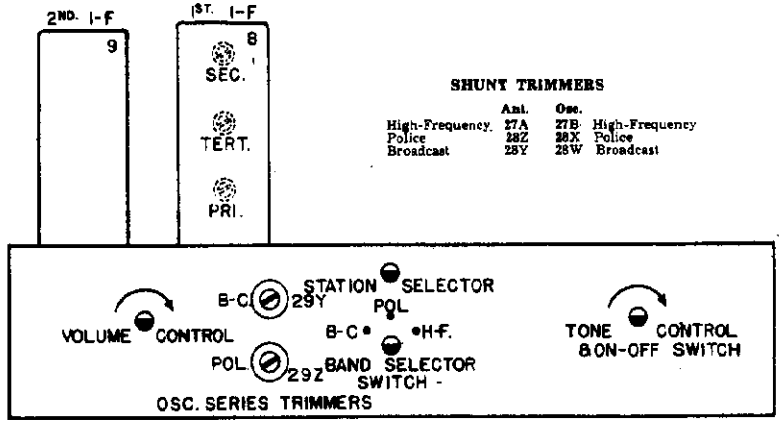

SHUNT TRIMMERS

	Ant.	Osc.	
High-Frequency	27A	27B	High-Frequency
Police	28Z	28X	Police
Broadcast	28Y	28W	Broadcast

Fig. 4 Front View

ALIGNMENT PROCEDURE

CONNECTING OUTPUT METER

Connect the two terminals of the output meter to the two plates of the 6N6 Output tube. Be sure the meter is protected from D.C. by connecting a condenser (.1 mfd. or larger—not electrolytic) in series with one of the leads.

Tuning I-F Amplifier to 450 Kilocycles.

(a) Connect the output of the signal generator through a .02 mfd. condenser to the top cap of the 6K7 I-F Amplifier tube, leaving the tube's grid clip in place. Connect the ground lead from the signal generator to the receiver chassis. KEEP THE GENERATOR OUTPUT LEAD AS FAR AS POSSIBLE FROM THE GRID LEADS OF THE OTHER SCREEN GRID TUBES.

(b) Turn the band selector switch to the Broadcast Band and rotate the station selector to approximately 60 on the dial. Turn the volume knob to the right (ON) and turn the tone control knob to the left (TREBLE).

(c) Set the signal generator to 450 kilocycles.

(d) Adjust the trimmer condensers located on top of the 2nd. I-F transformer for maximum output (Fig. 2).

ALWAYS USE THE LOWEST SIGNAL GENERATOR OUTPUT THAT WILL GIVE A REASONABLE OUTPUT METER READING.

(e) Transfer the output lead of the signal generator from the 6K7 tube to the top cap of the 6A8 Oscillator-Modulator tube, leaving the tube's grid clip in place.

(f) Close the middle trimmer (Tert. Fig. 4) on the 1st I-F transformer so that it is moderately tight. (Do not force adjusting screw).

(g) Adjust the top trimmer on the 1st. I-F transformer for maximum output.

(h) Adjust the bottom trimmer on the 1st I-F transformer for maximum output.

(i) Transfer the signal generator output lead from the 6A8 tube to the "ANT" terminal of the receiver and increase the output of the signal generator if necessary.

(j) Check the adjustment of the bottom trimmer of the 1st I-F transformer. DO NOT READJUST THE TOP TRIMMER.

(k) Adjust the middle trimmer of the 1st I-F transformer by opening condenser until maximum output is obtained. DO NOT READJUST THE TOP AND BOTTOM TRIMMERS.

Aligning R-F Amplifier.

When aligning the R-F Amplifier the output lead of the signal generator is connected to the "ANT" terminal of the receiver. For the BLUE and RED bands a .00025 mfd. condenser must be connected in series with the output lead of the signal generator and for the high-frequency band a 400 ohm carbon resistor should be used in place of the condenser.

Each band should first be shunt aligned and then series aligned, where provision is made for series alignment (BLUE and RED bands). The band selector switch should be set for the band being aligned and the station selector and signal generator should be set to the frequency indicated (c) for each adjustment.

(a) Adjust the "OSC" and "ANT" shunt trimmers in the order given for maximum output. Readjust the station selector slightly so that the generator signal is tuned-in with maximum output and then check the adjustments of the "ANT" trimmers. DO NOT READJUST the "OSC" TRIMMER.

NOTE: When shunt aligning the RED and GREEN bands care must be exercised so that the circuits will be aligned on the correct frequency rather than on the image frequency which is approximately 900 kilocycles less than the fundamental. To check on this, increase the output of the signal generator ten times or more and try to tune-in the signal both at the generator frequency as indicated on the station selector dial and at approximately 900 kilocycles less than the correct frequency. If the circuits have been properly aligned the signal can be tuned-in at both positions but much stronger at the correct position.

(b) To align the series trimmers (29Y-29Z Fig. 4) set the signal generator to the frequency indicated (c) and then tune-in this signal with the station selector for maximum output. To obtain the best adjustment for each series trimmer it will be necessary to rotate the station selector back and forth slightly while adjusting the trimmer for maximum output.

(c) Signal Input Frequencies:

	Shunt Alignment	Series Align
American Broadcast Band (BLUE)	1700 Kilocycles	600 Kilocy
Police Band (RED)	6000 Kilocycles	2500 Kilocy
High-Frequency Band (GREEN)	18000 Kilocycles	.....

©John F. Rider Publisher

CROSLEY RADIO CORP.

MODEL 656
Schematic, Voltage
Trimmers

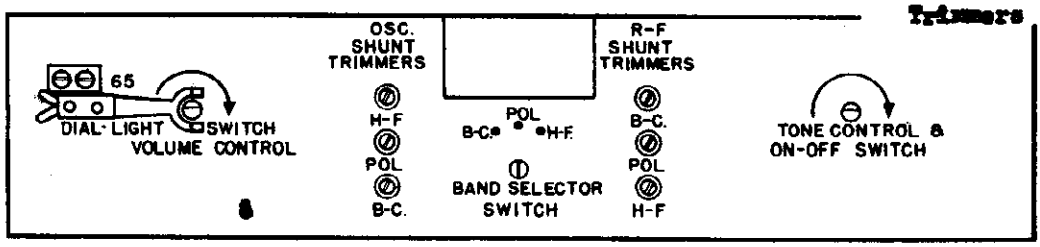

Fig. 4. Front View

MAY, 1936

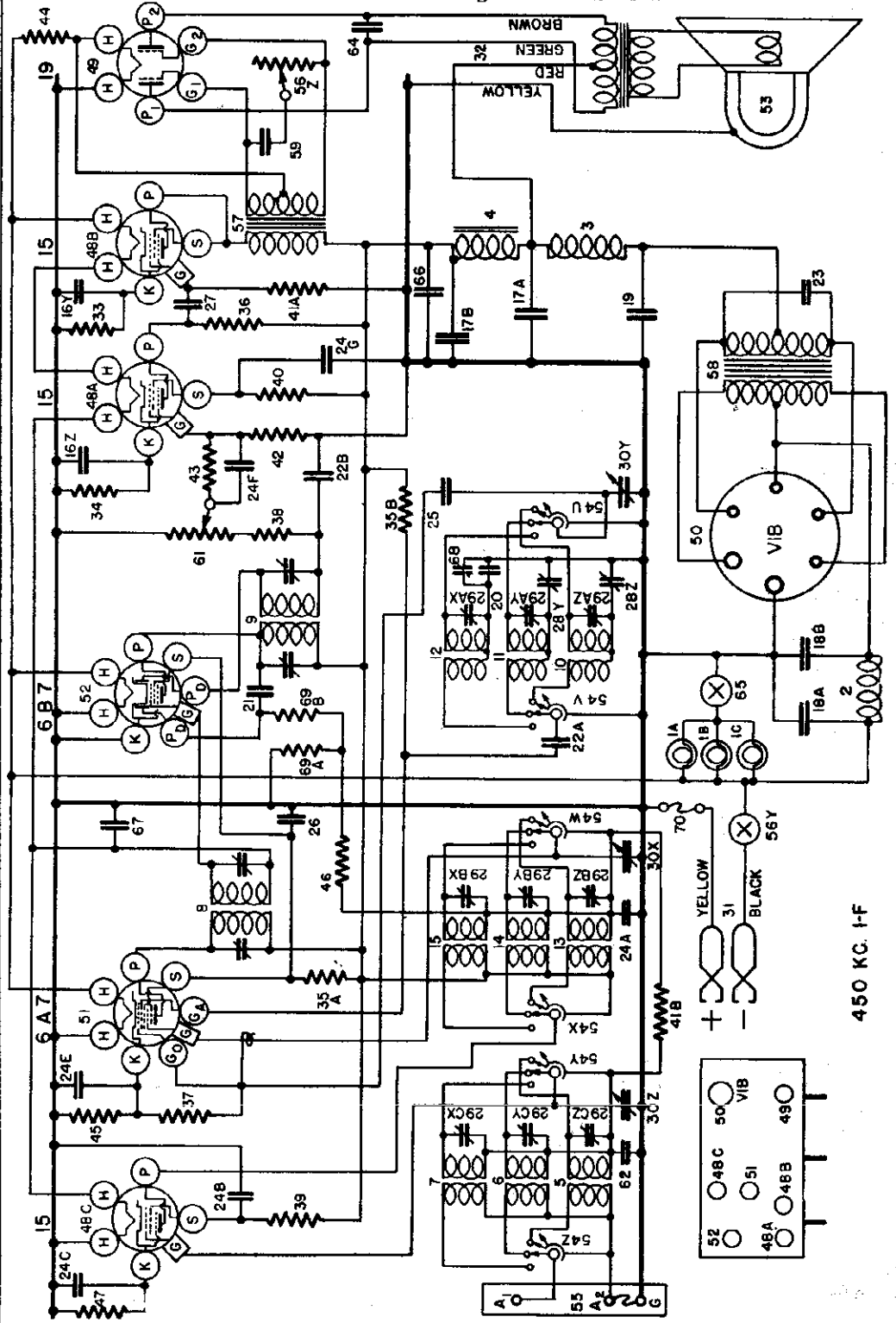

TUBE SOCKET VOLTAGE READINGS

Tube	Function	H	P	S	G	K	Ga	Ge
15	R-F Amplifier	2.0	180	105	—	1.5	—	-8.0
6A7	Oscillator-Mod.	6.0	180	95	—	3.5	120	—
6B7	I-F Amp.-Diode Det.	6.0	180	95	—	3.0	—	—
15	A-F Amplifier	2.0	130	80	—	—	—	—
15	Audio Driver	2.0	180	—	—	—	—	—
19	Twin Output	2.0	180	—	—	—	—	—

"A" Battery Drain Approximately 2.8 Amperes at 6.0 Volts.
Power Output Approximately 2 Watts.

©John F. Rider, Publisher

MODEL 636
Socket, Trimmers
Chassis, Parts
Alignment

CROSLEY RADIO CORP.

ALIGNMENT PROCEDURE

All the circuits in this receiver are very accurately adjusted at the factory and normally should need no further adjustment. However, if it is definitely known that an adjustment is necessary the circuits can best be properly aligned with the use of a modulated signal generator and an output meter.

CONNECTING OUTPUT METER

Connect one terminal of the output meter to P1 and the other terminal to P2 of the 19 Output tube. Be sure the meter is protected from D.C. by connecting a condenser (.1 mfd. or larger—not electrolytic) in series with one of the leads.

1. Tuning I.F Amplifier To 450 Kilocycles.

(a) Connect the output of the signal generator through a .02 mfd. condenser to the top cap on the 6A7 tube, leaving the tube's grid clip in place. Connect the ground lead from the signal generator to the "GND" terminal of the receiver. KEEP THE GENERATOR OUTPUT LEAD AS FAR AS POSSIBLE FROM THE GRID LEADS OF THE OTHER SCREEN GRID TUBES.

(b) Set the station selector so that the tuning condenser plates are completely out of mesh. Turn the volume control knob to the right (ON) and turn the tone control knob to the left (TREBLE).

(c) Turn the band selector switch to the right (High Frequency Band).

(d) Set the signal generator to 450 kilocycles.

(e) Adjust the trimmers located on top of the 2nd I.F transformer for maximum output. Fig. 2.

(f) Adjust the trimmers located on top of the 1st I.F transformer for maximum output.

(g) Repeat operations (e) and (f) for more accurate adjustments.

ALWAYS USE THE LOWEST SIGNAL GENERATOR OUTPUT THAT WILL GIVE A REASONABLE OUTPUT METER READING.

2. Aligning R.F Amplifier.

When aligning the R.F amplifier the output lead from the signal generator is connected to the antenna ("A-1") terminal of the receiver through a .00025 mfd. condenser.

Each band should first be shunt aligned and then series aligned. The band selector switch should be set to the frequency indicated for each adjustment.

Adjust the "OSC", "R.F" and "ANT" shunt trimmers in the order given for maximum output. Tune the station selector to the signal generator for maximum output and then check the adjustments of the "R.F" and "ANT" trimmers in the order given. Do not readjust the "OSC" trimmer. NOTE: When aligning the High Frequency Band care must be exercised so that the circuits will be aligned on the fundamental frequency rather than on the image frequency which is approximately 900 kilocycles less than the fundamental. To check on this, increase the output of the signal generator approximately ten times and try to tune-in the signal at both the generator frequency as indicated on the station selector dial and at approximately 900 kilocycles below the correct frequency. If the circuits have been properly aligned the signal can be tuned-in at both positions but much stronger at the correct position.

To adjust the "series" trimmers (Illus. Nos. 68, 28Z and 28Y top view, Fig. 2) set the signal generator to the frequency indicated and then tune-in this signal with the station selector for maximum output. Adjust the "series" trimmer while rocking the tuning condenser back and forth slightly, until no further improvement in output can be obtained.

SIGNAL INPUT FREQUENCIES

	Shunt Alignment	Series Alignment
BLUE (American Broadcast)	1700 Kc.	600 Kc.
RED Police and Amateur)	6.0 Mc.	2.0 Mc.
GREEN (High Frequency)	18.0 Mc.	6.0 Mc.

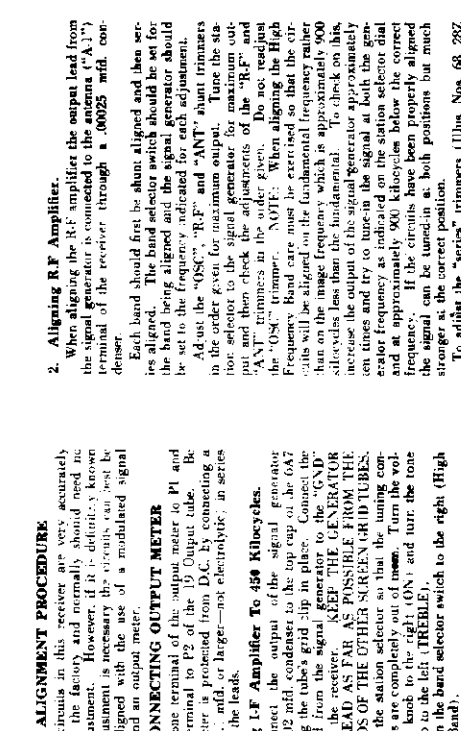

Fig. 2. Top View

SPECIFICATIONS

The Crosley Model 636 is a six-tube superheterodyne receiver designed for operation from a six-volt storage battery. It contains a completely shielded, built-in

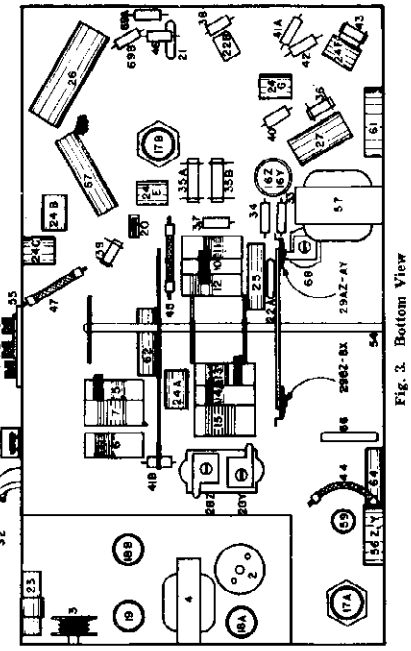

Fig. 3. Bottom View

voltmeter (except filaments) with the volume control full or and no signal input. The filament voltages should be measured with an accurate low range D.C. voltmeter (approximately 0 to 10 volts). Voltage limits may vary plus or minus 10% of values given.

BLUE 540-1800 Kc. or 555-167 Meters
RED 6-18.0 Mc. or 167-50 Meters
GREEN 6.0-18.0 Mc. or 50-17 Meters

TUBES AND VOLTAGE LIMITS

The following table gives the functions of the tubes used, together with the voltage readings between the tube socket contacts and the chassis. Voltage readings should be taken with a 1000 ohm per volt, 250 volt power supply unit which employs a self-rectifying type vibrator.

The tuning range of this receiver is from 540 to 18000 kilocycles and is divided into three bands as follows:

(American Broadcast Band)
(Police and Amateur Band)
(High Frequency or Short Wave Band)

PARTS LIST—MODEL 636

Figures in first column refer to parts in Pictures.

Item No.	Part No.	Description	Item No.	Part No.	Description
(ABC)	W —37922	Dial Light	39	—34020	Resistor 250,000 Ohm ½W. Ins.
	G3 —37965	Dial Light Bracket Assembly	40	—35321	Resistor 400,000 Ohm ½W. Ins.
	G18 —38067	Choke—L.F. "A" Filter	41A	—38322	Resistor 500,000 Ohm ½W. Ins.
2	G41 —24234	Choke—H.F. "B" Filter	41B	—38322	Resistor 500,000 Ohm ½W. Ins.
3	G44 —38038	Choke—H.F. "B" Filter	42	—38388	Resistor 3 Megohm ½W. Ins.
4	G10 —24033	Ant. Coil B-C-B.	43	—35378	Resistor 3 Megohm ½W. Ins.
5	G111—22000	Ant. Coil Pol.B.	44	—41302	Resistor 1 Ohm 1 W. Flexible
6	G112—23000	Ant. Coil H-F-B	45	—21985	Resistor 175 Ohm 1 W. Flexible
7	G106—33004	Int. I-F Assembly	46	—36176	Resistor 1.3 Megohm ½W. Ins.
8	G107—33005	2nd I-F Assembly	47	—35581	Resistor 1500 Ohm ½W. Flexible
9	G105—33003	Osc. Coil B-C-B.	48A	—28807	Socket Type 19
10	G30 —32002	Osc. Coil H-F-B.	48B	—28807	Socket Type 19
11	G10 —32002	Osc. Coil H-F-B.	48C	—28807	Socket Type 19
12	G75 —32001	R-F. Coil B-C-B.	49	G44 —28807	Socket Type 19
13	G77 —32001	R-F. Coil Pol.-B	50	G95 —28807	Socket Type V19
14	G78 —32001	R-F. Coil H-F-B.	51	G47 —28807	Socket Type 6A7
15	W —37778	Condenser .12 Mf. 25 V.	52	G46 —28807	Socket Type 6B7
16A		Condenser 40 Mf. 300 V. Electrolytic		W —38281A	Shield Base
16B	W —39057	Condenser 40 Mf. 300 V. Electrolytic		W —40911	Shield Can
17A	W —39057	Condenser 40 Mf. 300 V. Electrolytic	53	—42P14	Speaker Cone Assy. (Mfg. Ring 41459)
18A	W —38433	Condenser .5 Mf. 160 V. Tubular		—41452	Speaker Output Transformer for
18B	W —38433	Condenser .5 Mf. 160 V. Tubular		—41455	Above Speaker
19	W —37173	Condenser .25 Mf. 300 V. Tubular	54	—40910	Selector Switch
20	G2 —24000	Condenser .002 Mica	55	G25 —39719	Antenna Terminal Assembly
21	G3 —24000	Condenser .0001 Mica	56A		Power Control
22A	G1 —34002	Condenser .00025 Molded	56B		Switch
22B	G1 —34002	Condenser .00025 Molded	57	G47 —41627	Power Transformer
23	W —37214	Condenser .001 Mf. 1000 V. Oil Sealed	58	G4 —31618	Power Transformer
24A	W —36541	Condenser .02 Mf. 160 V.	59	G47 —24326	Vibrator Condenser .02 Mf. 200 V.
24B			60	W —39231	Vibrator
25	W —36541	Condenser .02 Mf. 160 V.		W —37225	Vibrator Cover
26	W —35159	Condenser .001 Mf. 400 V.		W —33312A	Vibrator Sleeve
27	W —32780	Condenser .05 Mf. 400 V.		—37367	Volume Control 1 Megohm.
28	W —37974	Double Osc. Series Trimmer		—28621	Condenser .02 Mf. 200 V.
28Y	W —38501A	3 Section Shunt Trimmer Cond. Assy.		W —25435	Condenser .003 Mf. 400 V.
28Z	G50 —38502	3 Section Shunt Trimmer Condenser		W —33458A	Dial Light Socket
30	MG43 —41118	Dial Assembly Complete		—34300	Condenser .0015 Mf. Mica
	1) —41638	Dial		—41359	I-F Osc. Series Trimmer
	—40165	Mask		—35632	Resistor 1 Megohm Ins.
	—41155	Long Hand		—36502	Resistor 1 Megohm Ins.
	—41145	Short Hand		W —33313	10 Amp. Fuse
	—41157	Drive Cord		W —33310A	Fuse Post Assembly
	—40587	Coupling Unit		W —34213	Cover Insulator
	—40486	Pointer Screw		W —33333	Fuse Panel Assembly
	—40538	Indicator Control Cable	G2	W —4072	Thumb Screw
31	MG21 —41118	Battery Cable & Clips		W C —37884	Escutcheon Ring
	—34001	Pot. (—) Clip		B —37886A	Escutcheon Retaining Ring
	—34001	Pot. (+) Clip		W B —37885	Escutcheon Plate
32	G8 —38455	Speaker Field Coil		B —40555	Escutcheon Glass
33	—38437	Resistor 4500 Ohm ½W. Ins.		B —41659	Escutcheon Glass Retaining Ring
34	—38317	Resistor 10,000 Ohm ½W. Ins.		W —40192B	Tail Knob (1)
35A	—37485	Resistor 15,000 Ohm ½W. Car.		W —41605	Knob (2)
35B	—37485	Resistor 15,000 Ohm ½W. Car.		W —41221	Upper, V. C. & Dial Light Switch
36	—38294	Resistor 30,000 Ohm ½W. Ins.		W —41222	Lower, V. C. & Dial Light Switch
37	—38057	Resistor 50,000 Ohm ½W. Ins.			
38	—35925	Resistor 350,000 Ohm ½W. Ins.			

©John F. Rider, Publisher

CROSLEY RADIO CORP.

MODEL 645,32 DC Six
Schematic, Socket

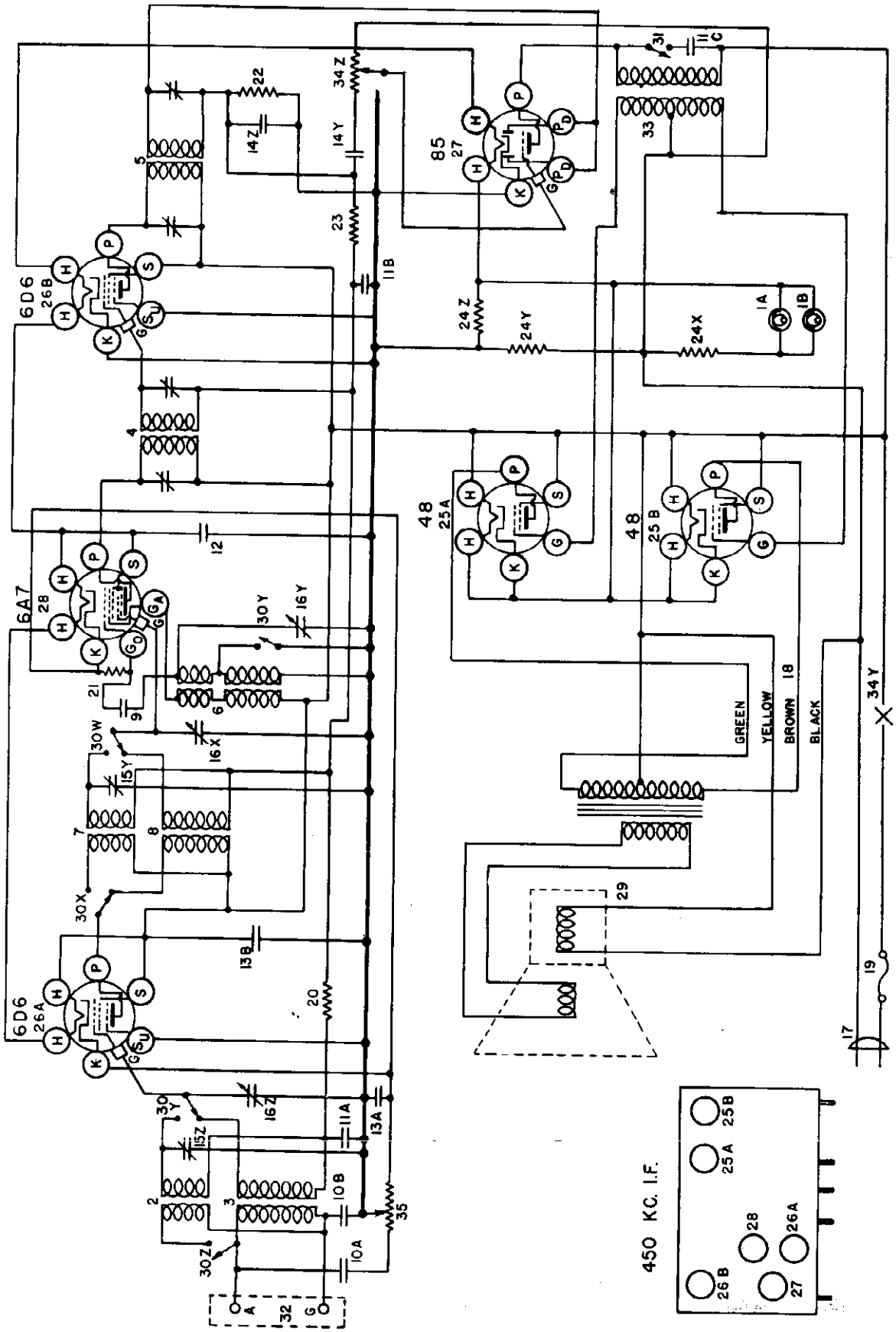

©John F. Rider, Publisher

©John F. Rider, Publisher

MODEL 645,32 DC SLx
Socket,Trimmers
Voltage,Alignment
Chassis,Parts

CROSLEY RADIO CORP.

TUBE SOCKET VOLTAGE READINGS

Tube	Function	H	P	S	Su	G	Ge	Ga	K
6D6	R-F Amp.	6.3	31.5	32	0	0	—	—	0
6A7	Osc.-Mod.	6.3	32.0	20	—	0	2	32	0
6D6	I-F Amp.	6.3	32.0	32	0	0	—	—	0
85	Det. & A-F Amp.	6.3	32.0	—	—	0	—	—	0
48	Output	25.0	31.5	32	—	0	—	—	5.7
48	Output	25.0	31.5	32	—	0	—	—	5.7

Measured on 32 Volt D-C Line. Current Drain Approximately 1.35 Amperes at 32 Volts.

SENSITIVITY CONTROL

The sensitivity control, Illus. No. 35, is a low resistance potentiometer. One end is connected through a condenser to the antenna lead and the other end is connected to the cathodes of the R-F and Osc-Mod tubes. The moving arm is connected to the chassis. When the knob is turned toward the left it simultaneously decreases the resistance across the primary of the antenna coil and increases the grid bias on the R-F and Osc-Mod tubes. This has the effect of decreasing the sensitivity of the receiver and increasing the selectivity. Since the sensitivity of the R-F and I-F amplifiers is simultaneously decreased, it serves as a control of overall oscillations which sometimes develop with abnormally high line voltage.

GROUND CIRCUIT

DO NOT ground the chassis except through the use of the "Gnd" terminal. This terminal is separated from the chassis by a series condenser in order to prevent a short circuit when operating the receiver on a 32 volt line with the positive side grounded.

ALIGNMENT PROCEDURE

All the circuits in this receiver are very accurately adjusted at the factory and should need no further adjustment. However, if an adjustment is found necessary the circuits can be properly aligned only with the use of a modulated signal generator and an output meter.

CONNECTING OUTPUT METER

Connect one terminal of the output meter to the plate of one of the type 48 output tubes and connect the other terminal to the plate of the other 48 tube. Looking at the bottom of the tube with the filament prongs toward you the plate prong will be the first prong to the left of the filament prongs. Be sure the meter is protected from D.C. by connecting a condenser (.1 mfd. or larger —not electrolytic) in series with one of the leads.

1. Peaking I-F Stages at 450 Kilocycles.

(a) Connect the output of the signal generator through a .02 mfd. condenser to the grid cap of the 6A7 tube, leaving the tube's grid clip in place. KEEP THE OUTPUT LEAD FROM THE SIGNAL GENERATOR AS FAR AS POSSIBLE FROM THE OTHER SCREEN GRID TUBES.

(b) Connect the ground terminal of the signal generator to the ground terminal of the receiver.

(c) Set the signal generator to exactly 450 kilocycles.

(d) Rotate the receiver tuning condenser until the rotor plates are completely meshed.

(e) Turn the band selector switch to the left. (Short Wave).

(f) Adjust the line voltage to 32 volts.

(g) Turn the volume control and the sensitivity control all the way to the right.

(h) With the signal generator set to the lowest usable output level adjust the I-F trimmer condensers for maximum signal output.

NOTE: The I-F trimmers are located on top of the I-F transformers, Fig. 2, and may be adjusted with an insulated screw driver. Always make the adjustments very carefully, going over them several times to insure that the final setting is at resonant frequency.

2. Aligning R-F Circuits—Broadcast Band (540-1570 K. C.)

(a) Turn the band selector switch to the right hand position. (Broadcast Band).

(b) Rotate the tuning condenser until the rotor plates are completely out of mesh.

(c) Connect the antenna terminal of the signal generator to the receiver antenna terminal through a .00025 mfd., mica, series condenser.

(d) Connect the ground terminal of the signal generator to the ground terminal of the receiver.

(e) Set the signal generator to approximately 1575 kilocycles.

(f) Adjust the "Osc." section (rear section) of the tuning condenser gang for maximum signal output. (Fig. 2.)

(g) Set the signal generator to 1400 kilocycles.

NOTE: If electrical interference causes an excessive reading on the output meter, making alignment difficult, it can be reduced by connecting a 5 to 10 mfd., paper, condenser between the ground terminal of the receiver and the chassis frame.

(h) Tune in the 1400 kilocycle signal with station selector for maximum output.

NOTE: Do not disturb the setting of the oscillator trimmer (rear section) as this is adjusted at 1575 kilocycles only and any further adjustment at this point would affect both the tuning range of the receiver and the tracking of its circuits.

(i) Adjust the "R-F" parallel trimmer of the condenser gang for maximum output.

(j) Adjust the "Ant." parallel trimmer of the condenser gang for maximum output.

(k) Repeat operations (h), (i) and (j) until no further improvement in output can be made.

3. Aligning R-F Circuits—Short Wave (1570-4000 K. C.)

(a) Set the signal generator to 2500 kilocycles.

(b) Turn the band selector switch to the left. (Short Wave).

(c) Tune in the 2500 kilocycle signal with the tuning condenser for maximum output.

(d) Adjust the R-F short wave padding condenser, Illus. No. 15Y for maximum output.

(e) Adjust the Ant. short wave padding condenser, Illus. No. 15Z for maximum output.

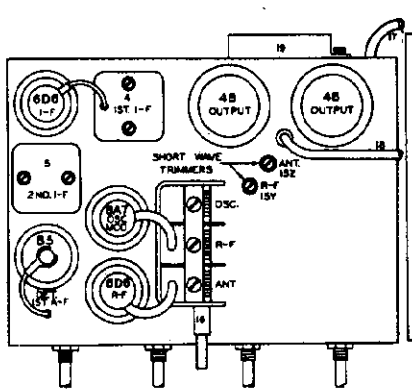

Fig. 2. Top View

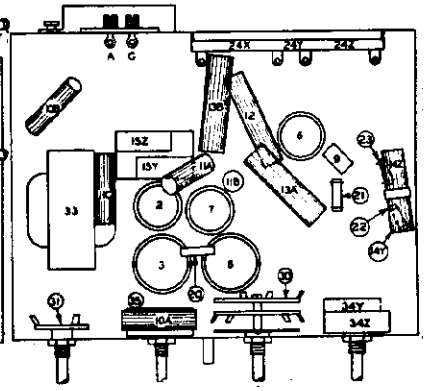

Fig. 3. Bottom View

PARTS LIST—MODEL 645

Figures in first column refer to parts shown in diagrams.

Item No.	Part No.	Description
1A, 1B	G4 —27134	Dial Light Bracket Assm.
2	G34—32000	Ant. Coil H-F (only)
	W —25025B	Coil Shield
	W —25200	Coil Socket
	W —26891	Insulating Washer
	W —21541C	Retaining Ring
3	G55—32000	Ant. Coil L-F (only)
	W —30802A	Coil Shield
	W —30026	Retaining Ring
4	G62—32004	1st I. F. Trans. Assm.
5	G63—32004	2nd I. F. Trans. Assm.
6	G43—32002	Osc. Coil H. F. & L. F. (only)
	W —25025B	Coil Shield
	W —25200	Coil Socket
	W —26891	Insulating Washer
	W —21541C	Retaining Ring
7	G32—32001	R. F. Coil H. F. (only)
	W —25024B	Coil Shield
	W —25200	Coil Socket
	W —26891	Insulating Washer
	W —21541C	Retaining Ring
8	G52—32001	R. F. Coil L. F. (only)
	W —30802A	Coil Shield
	W —30877B	Insulating Washer
	W —30026	Retaining Ring
9	G1 —34002	Condenser, 0.00025 mfd.
10A	W —30323	Condenser, 0.01 mfd. 200 V.
10B	W —30323	Condenser, 0.01 mfd. 200 V.
11A	W —28621	Condenser, 0.02 mfd. 200 V.
11B	W —28621	Condenser, 0.02 mfd. 200 V.
11C	W —28621	Condenser, 0.02 mfd. 200 V.
12	W —27216	Condenser, 0.05 mfd. 200 V.
13A	W —24049A	Condenser, 0.1 mfd. 200 V.
13B	W —24049A	Condenser, 0.1 mfd. 200 V.
14Z, 14Y	W —30322A	Condenser, 0.00017 mfd. 200 V.
15Z, 15Y	G5 —33008	Condenser, 0.006 mfd. 200 V.
16Z, 16Y, 16X	G39—33002	2 Section R. F. & Ant. H. F. Trim.
		3 Section Gang Condenser

Item No.	Part No.	Description
	MG21—36630	Dial Drive Assm.
	C —36629	Dial Face
	W —37198	Dial Hand
	W —32293	Dial Hand Nut (2)
17	B —34332	Power Supply Cord
18	G2 —35696	Speaker Cable
19	W — 7983A	Fuse, (3 Amp Cart)
	G1 —33339	Fuse, Panel Assm.
	W —33310A	Fuse Cover
	W —34223	Cover Insulator
20	—35600	Resistor, 100,000 Ohms ¼ W.
21	—21453	Resistor, 40,000 Ohms ¼ W.
22	—21454	Resistor, 1 Megohm ¼ W.
23	26677	Resistor, 3 Megohm ¼ W.
24Z, 24Y, 24X	W —36704	Resistor, 7.3 Ohm 4.25 W. Resistor, 1.8 Ohm 1.10 W. Resistor, 7.3 Ohm 0.75 W.
25A	G33—28807	Socket, 48
25B	G33—28807	Socket, 48
26A	G75—28807	Socket, 6D6
26B	G75—28807	Socket, 6D6
27	G27—28807	Socket, 85
28	G47—28807	Socket, 6A7
	W —35772	Tube Shield (half) (6)
	W —35773	Tube Shield Cap (3)
	W —35774	Tube Shield Base (3)
29	328CJ—4M	Speaker, (Table)
	428CJ—4M	Speaker, (Console)
30Z To 30V	W —36753	Band Change Switch
31	W —36755A	Tone Control Switch
32	G26—36719	Terminal Board Ant. & Grd.
33	MG14—36630	A. F. Transformer
34Z, 34Y	—36685A	Volume Control On-Off Switch
35	—36687	Sensitivity Control
	B —33528C	Escutcheon
	W —33984	Escutcheon Gasket
	D —28	Escutcheon Screws (4)
	W —37339	Knob (3)
	W —37341	Knob (2) Small

CROSLEY RADIO CORP.

MODEL 646
Schematic, Trimmers
Voltage, Socket

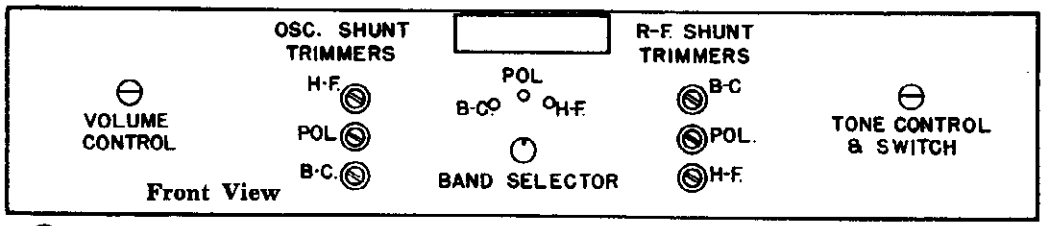

MAY, 1936

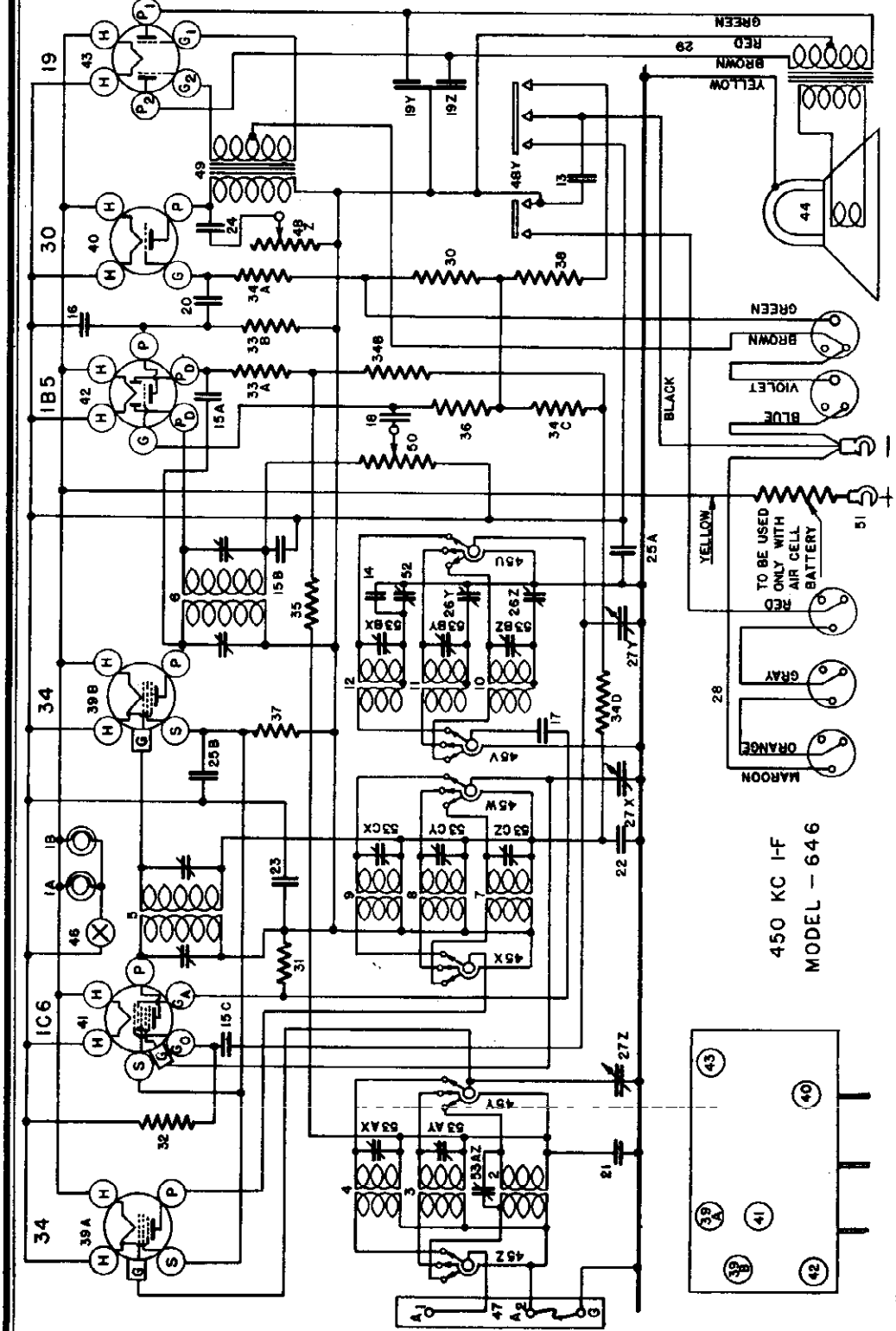

TUBE SOCKET VOLTAGE READINGS

Tube	Where Used	H	P	S	G	Ga	Go
34	R-F Amplifier	2.0	135	65	0		—
1C6	Osc.-Modulator	2.0	135	65	0	70	-2 to -10
34	I-F Amplifier	2.0	135	65	0	|	|
1B5	Diode & A-F Amp.	2.0	90	|	0	|	|
30	Driver	2.0	132	|	-9	|	|
19	Output	2.0	130	|	-4.5	|	|

Power output approximately 1.6 watts.
"A" battery drain approximately .62 amperes at 2 Volts.
"B" battery drain approximately 12 to 30 milliamperes depending on setting of Volume Control.

©John F. Rider, Publisher

©John F. Rider, Publisher

SPECIFICATIONS

The Crosley Model 646 radio is a six-tube superheterodyne receiver designed for operation from batteries. The method of connecting the battery cable is shown on the Wiring Diagram, Fig. 1. The batteries required are: one two volt storage battery or air cell battery, three plug-in type 45 volt "B" batteries and two plug-in type 4½ volt "C" batteries.

ALIGNMENT PROCEDURE
CONNECTING OUTPUT METER

Connect the two terminals of the output meter to the two plates of the 19 Output tube. Be sure the meter is protected from D.C. by connecting a condenser (.1 mfd. or larger-- not electrolytic) in series with one of the leads.

1. Tuning I-F Amplifier to 450 Kilocycles.

(a) Connect the output of the signal generator through a .02 mfd. or larger, condenser to the top cap of the 1C6 Osc-Mod tube, leaving the tube's grid clip in place. Connect the ground lead from the signal generator to the "GND" terminal of the receiver. KEEP THE GENERATOR LEADS AS FAR AS POSSIBLE FROM THE GRID LEADS OF THE OTHER SCREEN GRID TUBES.

(b) Set the station selector so that the tuning condenser plates are completely out of mesh. Turn the volume control knob to the right (ON).

(c) Turn the band selector switch to the "H-F" position.

(d) Set the signal generator to 450 kilocycles.

(e) Adjust both trimmers located on top of the 2nd I-F transformer for maximum output. Fig. 2.

(f) Adjust both trimmers located on top of the 1st I-F transformer for maximum output.

(g) Check operations (e) and (f) for more accurate adjustments.

ALWAYS USE THE LOWEST SIGNAL GENERATOR OUTPUT THAT WILL GIVE A REASONABLE OUTPUT METER READING.

2. Aligning R-F Amplifier.

When aligning the R-F amplifier the output lead from the signal generator is connected to the "ANT" (A1) terminal of the receiver through a .00025 mfd. condenser.

Each band should first be shunt aligned and then series aligned. The band selector switch should be set for the band being aligned and the signal generator should be set to the frequency indicated for each adjustment.

Adjust the "OSC," "R-F" (Fig. 4), and "ANT" (Fig. 2), shunt trimmers in the order given, for maximum output. Tune the station selector to the generator signal for maximum output and then check the adjustments of the "R-F" and "ANT" trimmers in the order given. Do not readjust the "OSC" trimmer. NOTE: When aligning the High Frequency Band care must be exercised so that the circuits will be aligned on the fundamental frequency rather than on the image frequency which is approximately 900 kilocycles less than the fundamental. To check on this, increase the output of the signal generator approximately ten times and try to tune-in the signal both at the generator frequency as indicated on the station selector dial and at approximately 900 kilocycles below the correct frequency.

To adjust the "series" trimmers, Illus. Nos. 52, 26Z and 26Y—Fig. 2, set the signal generator to the frequency indicated and then tune-in the signal with the station selector for maximum output. While adjusting each "series" trimmer rock the tuning condenser back and forth slightly, until no further improvement in output can be obtained.

	Shunt Alignment	Series Alignment
American Broadcast Band (BLUE)	1700 Kilocycles	600 Kilocycles
Police and Amateur Band (RED)	6000 Kilocycles	
High Frequency Band (GREEN)	18 Megacycles	

PARTS LIST—MODEL 646

Figures in first column refer to parts in Diagrams

Item No.	Part No.	Description
1A	W -37188	Dial Light
1B	W --37188	Dial Light
	G6 —27134	Light Bracket Assembly
2	G110- 32000	Ant. Coil—B-C-B.
3	G111—32000	Ant. Coil—Pol-B.
4	G112- 32000	Ant. Coil—H-F-B.
5	G111—32001	1st I-F Assembly
6	G46 -32001	2nd I-F Assembly
7	G98 --32002	Osc. Coil - B-C-B.
8	G99 —32002	Osc. Coil—Pol-B
9	G100 32002	Osc. Coil—H-F-B.
10	G76 -32001	R-F Coil—B-C-B.
11	G77 -32001	R-F Coil -Pol.-B
12	G78 - 32001	R-F Coil -H-F-B.
13	W 37628	Condenser 30 Mfd. 200 V. Electrolytic
14	G5 34007	Condenser 2757 Mmfd. Mica.
15A		
15B	G2 34002	Condenser Molded .0001 Mfd.
15C		
16	G3 -34002	Condenser Molded .0005 Mfd.
17	W —35139	Condenser Tubular .001 Mfd. 400 V.
18	W - 28619	Condenser Tubular .005 Mfd. 200 V.
19Z	W 31158	Condenser Tubular .005 Mfd. 400 V.
19Y		Condenser Tubular .035 Mfd. 400 V.
20	W -28621	Condenser Tubular .02 Mfd. 200 V.
21	W -32379	Condenser Tubular .02 Mfd. 200 V.
22	W --36541	Condenser Tubular .02 Mfd. 160 V.
23	W - 30488	Condenser Tubular .02 Mfd. 400 V.
24	W - 23615	Condenser Tubular .05 Mfd. 400 V.
25A	W 29910A	Condenser Tubular .25 Mfd. 200 V.
25B	W --29910A	Condenser Tubular .25 Mfd. 200 V.
26Z	--37874	B-C Osc. Series Trimmer
26Y		Pol. Osc. Series Trimmer
27	G50 --33002	3 Section Var. Tuning Condenser
	-40903B	Dial Drive Unit
	C 41220	Dial Glass
	-41586	Pointer Disc.
	—41582	Drive Cable
	—41584	Coupling Unit
	-41587	Pointer Disc. Screw
28	C —37106C	Battery Supply Cable Assembly
29	G8 -35696	Speaker Cable
30	—27121	Resistor .5000 Ohm ¼W.
31	-33390	Resistor 30000 Ohm ½W.
32	-36761	Resistor 40000 Ohm ½W.
33A	—35928	Resistor 60000 Ohm ½W.
33B	- 35928	Resistor 60000 Ohm ½W.
34A	-36322	Resistor 500000 Ohm ½W.
34B	-36322	Resistor 500000 Ohm ½W.
34C	—36322	Resistor 500000 Ohm ½W.
34D	-36322	Resistor 500000 Ohm ½W.
35	- 35947	Resistor 2 Megohm ½W.
36	—36688	Resistor 3 Megohm ½W.
37	37377	Resistor 20000 Ohm 1W.
38	W -22180	Resistor 1650 Ohm 1½W. Flex.
39A	G31 -28807	Socket Type 31
39B	G31 - 28807	Socket Type 34
40	G9 -28807	Socket Type 30
41	G84 -28807	Socket Type 1C6
42	G91 —28807	Socket Type 1B5
43	G44 -- 28807	Socket Type 19
	W --28974B	Tube Shield
	W -28873B	Tube Shield Base
44	—11423	Speaker 4" P.J.4
45Z		
45Y	C —40910	Band Selector Switch
45C		
46	W 40928A	Switch, Dial Light
47	G27 28579	Vol. & Grd. Terminal Assembly
48Y	—41368	Battery Switch
48Z		Tone Control
49	G26 --24628	Audio Transformer
50	37467	Volume Control
51	G3 —2300	Resistor .372 Ohm (Air Cell)
52	41930	Condenser, H-F Osc. Series Trimmer
53	W -35951	4 Section Shunt Trimmer Assembly
	B -40929	Escutcheon
	W —28760A	Escutcheon Pin
	W -41221	Knob, Station Selector
	W —41223	Knob, Dial Light
	W -40192B	Knob, Band Selector Sw.
	W --41224	Knob, V. C. & T. C.

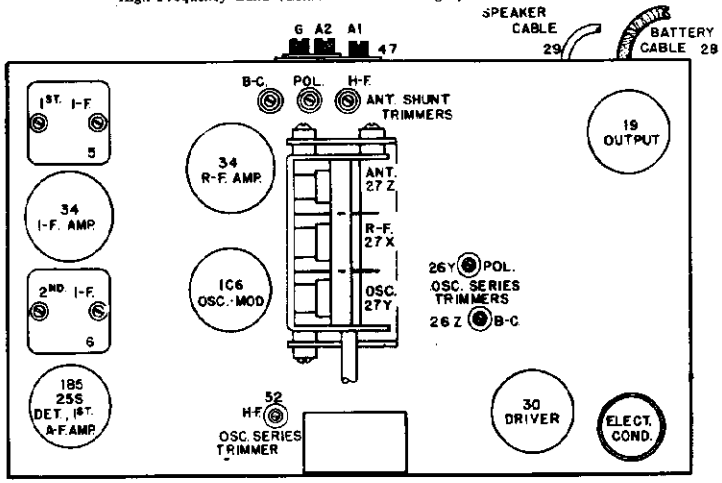

Fig. 2 Top View

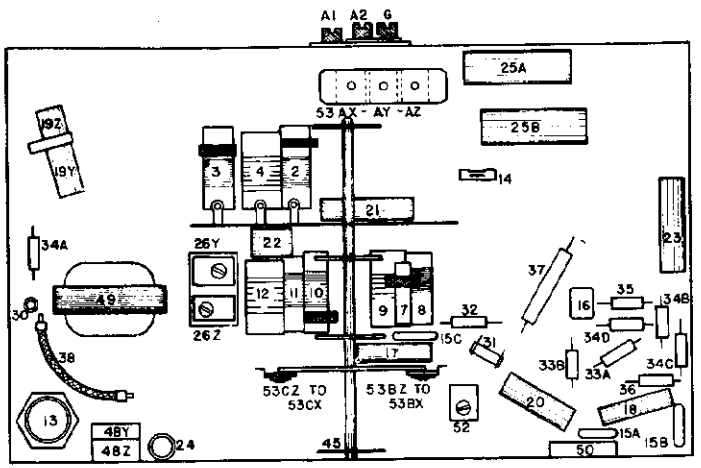

Fig. 3. Bottom View

CROSLEY RADIO CORP.

MODEL 655, Olympi
Schematic, Socke
Trimmers, Voltag
Chassis

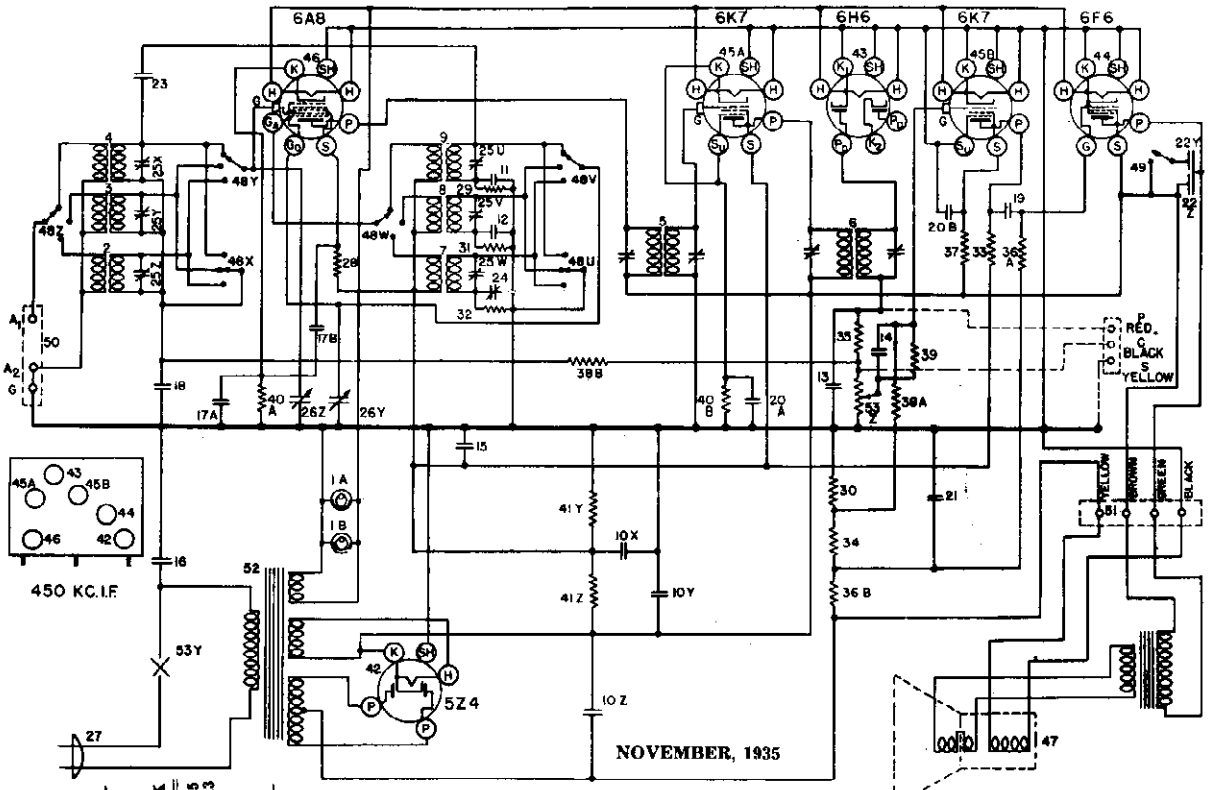

TUBE SOCKET VOLTAGE READINGS

Tube	Function	H	P	S	Su	G	Go	Ga	K
6A8	Osc-Mod	6.3	220	80	—	0	−4 to −10	105	2.5
6K7	I. F. Amplifier	6.3	220	105	3.3	0	—	—	3.3
6H6	Diode Detector	6.3	—	—	—	—	—	—	0
6K7	A. F. Amplifier	6.3	20	20	0	1.0	—	—	0
6F6	Output	6.3	210	220	—	8.0	—	—	—
5Z4	Rectifier	4.9	220	—	—	—	—	—	—

Measured on 117.5 Volt—60 Cycle Line. Power Consumption Approximately 60 Watts.

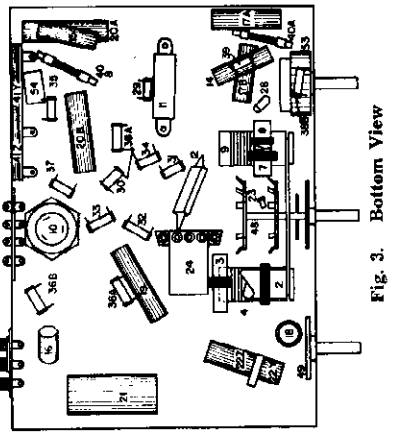

Fig. 3. Bottom View

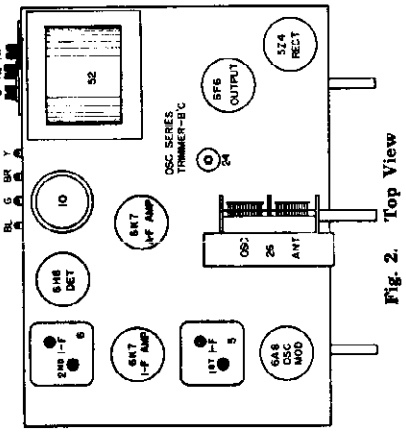

Fig. 2. Top View

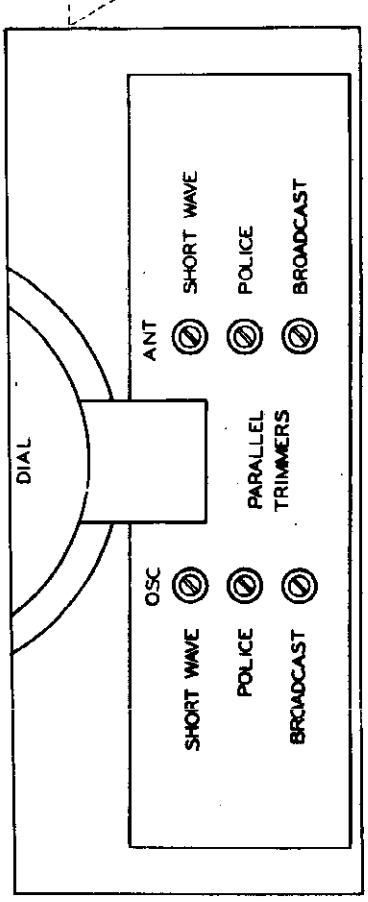

Fig. 4. Front View 655

©John F. Rider, Publisher

MODEL 655, Olympia
Alignment, Parts

CROSLEY RADIO CORP.

SPECIFICATIONS

The Crosley Model 655 radio is a six-tube superheterodyne receiver using all metal tubes and is available or adaptable for operation on A.C lines as follows: 110 V—60 cycles, 110 V—25 cycles and 220 V—25 cycles. It is a three band receiver tuning from 540 to 1700 kilocycles in the broadcast band, 1700 to 5200 kilocycles in the police and amateur band and 5400 to 15,300 kilocycles in the high frequency band.

The tubes used are: 6A8 Oscillator-Modulator, 6K7 I-F Amplifier, 6H6 Detector and AVC, 6K7 A-F Amplifier, 6F6 Output and type 5Z4 Rectifier.

SOCKET VOLTAGES

The tube socket voltages are measured from the socket contacts to the chassis with a 1000 ohm per volt, 250 volt voltmeter (except filaments) with the receiver in operating condition and no signal input. Readings may vary plus or minus 10% of values given.

PARTS LIST—MODEL 655

Figures in first column refer to parts shown in diagrams.

Item No.	Part No.		Description
1A	G4	—27134	Dial Light Assm.
1B	G4	—27134	Dial Light Assm.
2	G39	—32000	Ant. Coil only 540–1725 Kc.
3	G43	—32000	Ant. Coil only 1.7–5.2 Mc.
4	G40	—32000	Ant. Coil only 5.3–15.5 Mc.
5	G59	—32004	1st I. F. Trans. Assm.
6	G38	—32004	2nd I. F. Trans. Assm.
7	G34	—32002	Osc. Coil only 540–1725 Kc.
8	G35	—32002	Osc. Coil only 1.7–5.2 Mc.
9	G48	—32002	Osc. Coil only 5.3–15.5 Mc.
10Z			Condenser, 8 mfd. 450 V.
10Y	B	—30059C	Condenser, 8 mfd. 450 V.
10X			Condenser, 8 mfd. 450 V.
11	G12	—34000	Condenser, 4725 mmf.
12	G7	—34000	Condenser, 1450 mmf.
13	G2	—34002	Condenser, 0.0001 mfd. 200 V.
14	W	—28819	Condenser, 0.006 mfd. 200 V.
15	W	—32378	Condenser, 0.01 mfd. 400 V.
16	W	—30805	Condenser, 0.01 mfd. 400 V.
17A	W	—28621	Condenser, 0.02 mfd. 200 V.
17B	W	—28621	Condenser, 0.02 mfd. 200 V.
18	W	—32380	Condenser, 0.05 mfd. 200 V.
19	W	—27216	Condenser, 0.05 mfd. 200 V.
20A	W	—24049B	Condenser, 0.1 mfd. 200 V.
20B	W	—24049B	Condenser, 0.1 mfd. 200 V.
21	W	—30321A	Condenser, 1.0 mfd. 160 V.
22	W	—35011	Condenser, 0.006 mfd. 400 V.
23			Condenser, 0.03 mfd. 400 V.
24	G49	—34402	Condenser, 1.0 mmf.
25Z	G10	—33005	Condenser, B. C. Series Padder
25Y			
25X	W	—35951	3 Section Ant. Trimmer Cond.
25W			
25V			
25U	W	—35951	3 Section Osc. Trimmer Cond.
26Z			
26Y	G13	—33001	Var. Tuning Cond. Gang
	G29	—32086	Dial Assm. Complete
	W	—37198	Dial Hand
	W	—32393	Dial Hand Nut (2)
27	B	—35905A	A. C. Cord & Plug
28		—36318	Resistor, 15,000 Ohm (Insul.)
29		—36318	Resistor, 15,000 Ohm (Insul.)
30		—36318	Resistor, 15,000 Ohm (Insul.)
31		—34990	Resistor, 25,000 Ohm
32		—21453	Resistor, 40,000 Ohm
33		—21875	Resistor, 100,000 Ohm
34		—34018	Resistor, 200,000 Ohm
35		—21455	Resistor, 300,000 Ohm
36A		—23786	Resistor, 500,000 Ohm
36B		—23785	Resistor, 500,000 Ohm
37		—34883	Resistor, 2.0 Megohm
38A		—26577	Resistor, 3.0 Megohm
38B		—26577	Resistor, 3.0 Megohm
39		—26578	Resistor, 5.0 Megohm
40A		—25937	Resistor, 275 Ohms (Flex)
40B		—25937	Resistor, 275 Ohms (Flex)
41Z			Resistor, 8,500 Ohms
41Y	W	—35963	Resistor, 25,000 Ohms
42	G154	—36400	Socket, 5Z4
43	G155	—36400	Socket, 6H6
44	G153	—36400	Socket, 6F6
45A	G151	—36400	Socket, 6K7
45B	G151	—36400	Socket, 6K7
46	G156	—36400	Socket, 6A8
47	318RL	—18M	Speaker, (Table Model)
	418CL	—22M	Speaker, (Console Model)
48U To 48Z	B	—35935	Band Change Switch
49	W	—35937	Switch Tone Control
50	G27	—28713	Terminal Board Ant.—Grd.
51	G5	—31128	Terminal Board Speaker
	W	—34628	Term. Board Cover (Speaker)
	W	—34627	Term. Board Cover Insulator
52	G8	—28500	Power Trans. 60 Cy. 110 V.
	G9	—28500	Power Trans. 25 Cy. 110 V.
	G10	—28500	Power Trans. 25 Cy. 220 V.
53Z		—35938	Volume Control &
53Y			On-Off Switch
54	G1	—34002	Condenser, 0.00025 mfd.
	B	—33528C	Escutcheon
	W	—33984	Escutcheon Gasket
	D	—28	Escutcheon Screw (4)
	W	—36312	Band Change Plate
	W	—36309	Band Change Indicator
	W	—28760B	Escutcheon Pins
	W	—37340	Knob, Band Change
	W	—37339	Knob (3)

ALIGNMENT PROCEDURE

All the circuits in this receiver are very accurately adjusted at the factory and should need no further adjustment. However, if it is definitely known that an adjustment is necessary the circuits can be properly aligned only with the use of a modulated signal generator and an output meter.

CONNECTING OUTPUT METER

Connect one terminal of the output meter to the plate and the other terminal to the screen of the 6F6 output tube. Be sure the meter is protected from D.C. by connecting a condenser (.1 mfd. or larger—not electrolytic) in series with one of the leads.

1. Tuning I. F. Amplifier to 450 Kilocycles.

(a) Connect the output of the signal generator through a .02 mfd. condenser to the grid cap of the 6A8 tube, leaving the tube's grid clip in place. Connect the ground lead from the signal generator to the receiver chassis. KEEP THE GENERATOR LEADS AS FAR AS POSSIBLE FROM THE GRID WIRES OF THE OTHER S. G. TUBES.

(b) Turn the tuning condenser rotor plates until they are completely meshed.

(c) Turn the band selector switch to the short wave band (extreme left hand position).

(d) Set the signal generator to 450 kilocycles.

(e) Adjust both trimmers located on top of the 2nd I. F. transformer for maximum output. (Fig 2).

(f) Adjust both trimmers located on top of the 1st I. F. transformer for maximum output.

(g) Using the lowest signal generator output that will give a reasonable scale deflection on the output meter repeat operations (e) and (f) as many times as necessary to obtain the maximum output.

2. Aligning R. F. Amplifier—Broadcast Band (540 to 1700 Kc.)

(a) Connect the output of the signal generator through a .00025 mfd. condenser to the "Ant" terminal of the receiver.

(b) Turn the tuning condenser rotor plates until they are COMPLETELY OUT OF MESH.

(c) Turn the band selector switch to the broadcast band (extreme right hand position).

(d) Set the signal generator at 1720 kilocycles.

(e) Adjust the oscillator parallel trimmer (broadcast band) for maximum output.

(f) Set the signal generator at 1400 kilocycles.

(g) Tune-in the 1400 kilocycle signal with the station selector.

(h) Adjust the antenna parallel trimmer (broadcast band) for maximum output.

(i) Using the lowest signal generator output that will give a reasonable output meter reading, repeat operations (g) and (h) until no farther increase in output can be obtained.

(j) Set the signal generator to 600 kilocycles.

(k) Tune-in the 600 kilocycle signal with the station selector in the region of 60 on the dial, for maximum reading on the output meter.

(l) Adjust the oscillator series trimmer, (Fig. 2) while rocking the condenser gang plates back and forth slightly, until no further increase in output can be obtained.

(m) Repeat operations (g) and (h) for more accurate adjustments.

3. Aligning R. F. Amplifier—Police Band 1700 to 5200 Kc.)

(a) Turn the band selector switch to the police band (middle position).

(b) Set the signal generator to 5000 kilocycles. (5.0 megacycles).

(c) Turn the station selector to 5 on the police band.

(d) Adjust the oscillator parallel trimmer (P. Band) for maximum output. (Fig. 4).

(e) Adjust the antenna parallel trimmer (P. Band) for maximum output.

4. Aligning R. F. Amplifier—Short Wave Band 5.4 to 15 Meg.)

(a) Replace the .00025 mfd. condenser which is being used in series with the output lead of the signal generator with a 400 ohm carbon resistor.

(b) Turn the band selector switch to the short wave band (left hand position).

(c) Set the signal generator to 15 megacycles.

(d) Close the Oscillator parallel trimmer (S-W Band) and then open three turns.

(e) Close the Antenna parallel trimmer (S-W Band) and then open ½ turn.

(f) Turn the station selector to 15 on the dial (S-W Band.)

(g) Peak the oscillator parallel trimmer (S-W Band) on the FIRST signal heard when closing the condenser. In making this adjustment care should be taken not to use too much output from the signal generator to avoid setting the oscillator circuit on the wrong frequency.

NOTE: Check on the adjustment of the S-W Band oscillator parallel trimmer as follows:

1. Increase the signal generator output not more than ten times.

2. Try to tune-in the 15 megacycles signal with the station selector at approximately 14 on the dial.

3. If the 15 megacycle signal can be heard at approximately 14 and 15 both on the dial the oscillator parallel trimmer has been aligned on the correct frequency. It should be noted, however, that the signal tuned in at 15 on the dial should be much stronger than the signal heard at 14. If this condition is not found it will be necessary to repeat operation (g).

(h) Reduce the output of the signal generator to the previous output and retune the station selector to 15 megacycles at 15 on the dial.

(i) Adjust the antenna parallel trimmer (S-W Band) for maximum output, then retune the station selector for maximum output.

(j) Repeat the two operations in (i) as many times as necessary to obtain the maximum output.

NOTE: On the band selector switch there is a small eyelet soldered to one of the connecting lugs. This eyelet, item No. 23, is used as a small condenser the capacity of which is formed by inserting an insulated wire into the sleeve of the eyelet. If a new band selector switch is installed care should be taken to see that the "capacity wire" is inserted into the sleeve of the eyelet. This insulated wire should be passed through the eyelet and a slight hook made in the end to prevent it from pulling out. (See Fig. 3).

©John F. Rider, Publisher

CROSLEY RADIO CORP.

SPECIFICATIONS

The Crosley Model 725 radio is a seven-tube superheterodyne receiver and is available or adaptable for operation on A-C lines as follows: 110 V—60 cycles, 110 V—25 cycles and 220 V—25 cycles.

It is a five band receiver and the dial is divided into five sections as follows:

ORANGE—	150- 400	kilocycles	(Weather Band)
BLACK —	540- 1,555	kilocycles	(American Broadcast Band)
GREEN —	1,500- 4,200	kilocycles	(Police and Amateur Band)
RED —	3,900-10,400	kilocycles	(Night High Frequency Band)
VIOLET —	9,800-22,000	kilocycles	(Day High Frequency Band)

The positions on the band selector switch are in the above order, reading from right to left.

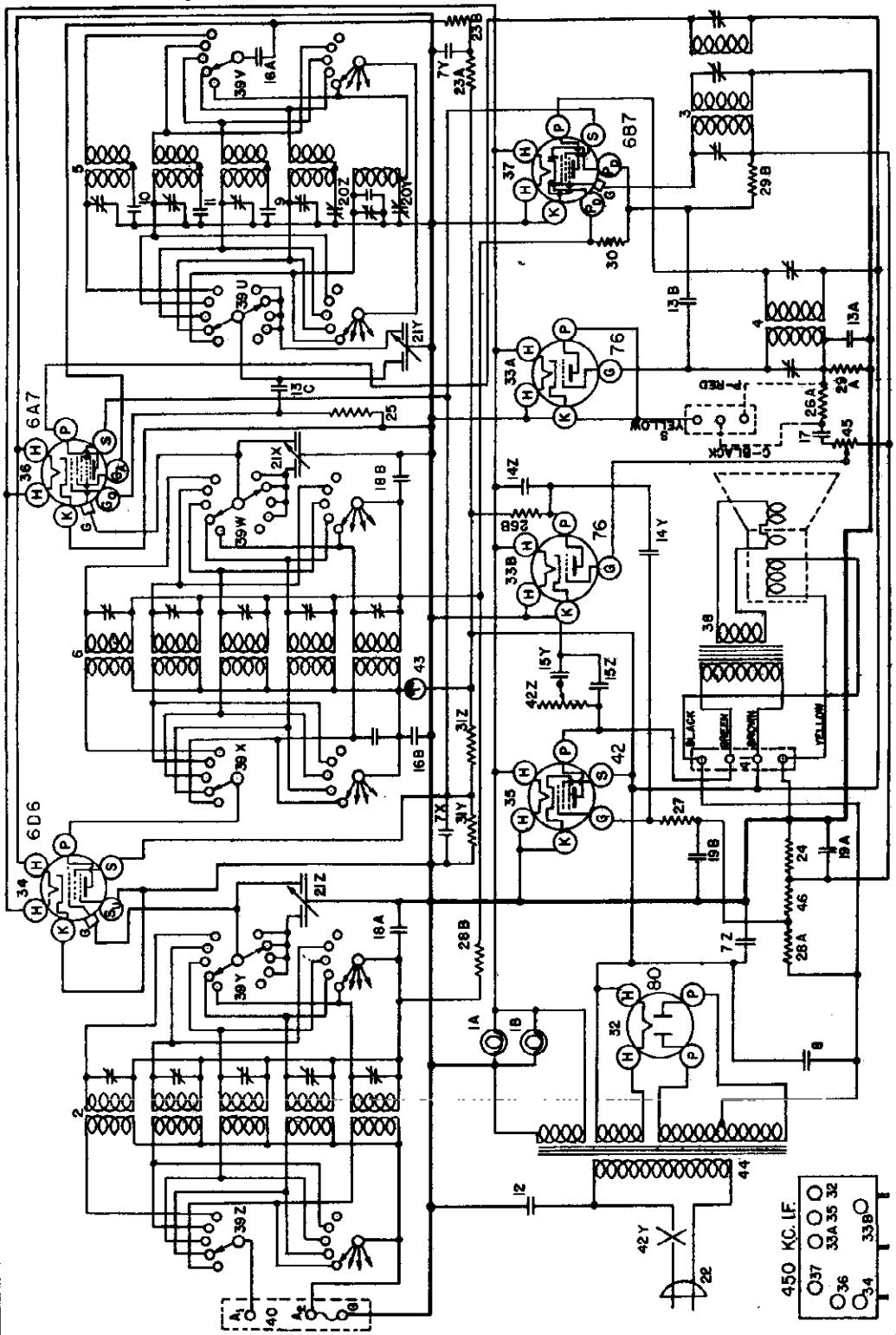

TUBE SOCKET VOLTAGE READINGS

Tube	Function	H	P	S	Su	G	K	Ge	Ga
6D6	R-F Amplifier	6.3	315	110	0	-3	0	—	185
6A7	Osc.-Mod.	6.3	315	110		-3	0	-5 to -15	
6B7	I-F Amp. & AVC	6.3	315	110	0	-3	0		
76	Detector	6.3	—	—			0		
76	A-F Amplifier	6.3	35	—	—	-3	0		
42	Output	6.3	300	245	9	-16	0		
80	Rectifier	5.0	220	—	—	—	—		

©John F. Rider, Publisher

MODEL 725, Viking
Socket, Trimmers
Chassis, Parts
Alignment

CROSLEY RADIO CORP.

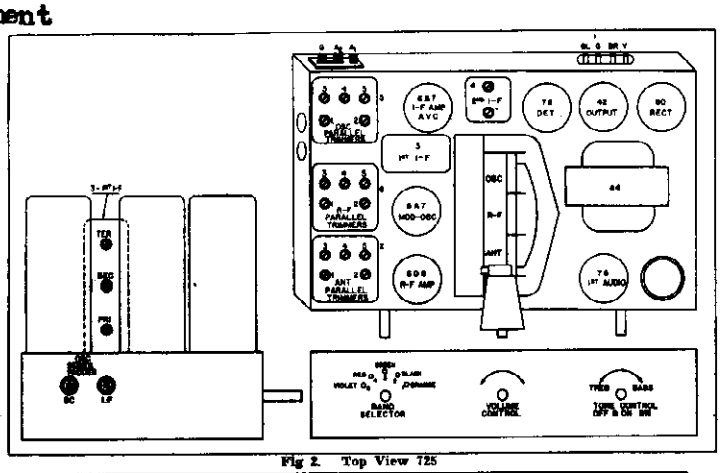

Fig 2. Top View 725

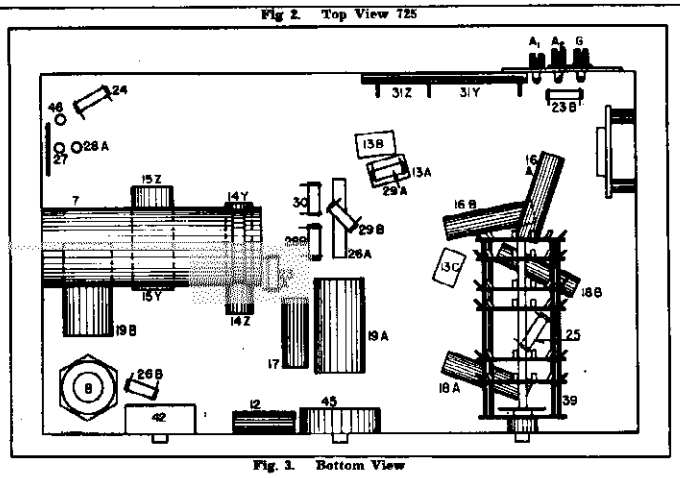

Fig. 3. Bottom View

PARTS LIST—MODEL 725

Figures in first column refer to parts shown in diagrams

Item No.	Part No.	Description
1A		
1B	—36504	Dial Light Socket Assm.
2	G57—32900	Ant. Coil Assm. Complete
	G48—32000	Ant. Coil only 150-400 Kc.
	G47—32000	Ant. Coil only 540-1500 Kc.
	G49—32000	Ant. Coil only 1500-4000 Kc.
	G33—32000	Ant. Coil only 4-10 Mc.
	G52—32000	Ant. Coil only 10-22 Mc.
	MG9 —36168	Shield
	W —36028	5 Section Trimmer Condenser
	MG19—36168	Coil Support Base
3	G47—32904	1st I. F. Assm.
4	G46—32904	2nd I. F. Assm.
5	G46—32902	Osc. Coil Assm. Complete
	G39 32002	Osc. Coil only 150-400 Kc.
	G40—32002	Osc. Coil only 540-1500 Kc.
	G41—32002	Osc. Coil only 1500-4000 Kc.
	G45—32002	Osc. Coil only 4-10 Mc.
	G44—32002	Osc. Coil only 10-22 Mc.
	G4 —34007	Condenser, 1136 mmf. *
	G6 —34007	Condenser, 1707 mmf. *
	G5 —34007	Condenser, 2757 mmf. *
	G8 —34002	Condenser, 25 mmf.
	MG20—36168	Coil Support Base
	W —36028	5 Section Trimmer Condenser
	MG10—36168	Shield
6	G38—32001	R. F. Coil Assm. Complete
	G27—32001	R. F. Coil only 150-400 Kc.
	G26—32001	R. F. Coil only 540-1500 Kc.
	G28—32001	R. F. Coil only 1500-4000 Kc.
	G31—32001	R. F. Coil only 4-10 Mc.
	G30—32001	R. F. Coil only 10-22 Mc.
	G1 —34002	Condenser, 250 mmf.
	MG9 —36168	Shield
	MG19—36168	Coil Support Base
	W —36028	5 Section Trimmer Condenser
7Z		Condenser, 8 mfd. 450 Volt
7Y	W —36056	Condenser, 4 mfd. 350 Volt
7X		Condenser, 4 mfd. 250 Volt
8	W —36055	Condenser, 35 mfd. 400 Volt
9	G4 —34007	Condenser, 1136 mmf. *
10	G6 —34007	Condenser, 1707 mmf. *
11	G5 —34007	Condenser, 2757 mmf. *
12	W —30805	Condenser, 0.01 mfd. 400 Volt
13A	G2 —34002	Condenser, 100. mmf.
13B	G2 —34002	Condenser, 100. mmf.
13C	G2 —34002	Condenser, 100. mmf.
14Z	W —25537A	Condenser, 0.001 mfd. 400 V.
14Y		Condenser, 0.03 mfd. 400 V.
15Z	W —31052	Condenser, 0.004 mfd. 400 V.
15Y		Condenser, 0.05 mfd. 400 V.
16A	W —32378	Condenser, 0.01 mfd. 400 V.
16B	W —32378	Condenser, 0.01 mfd. 400 V.
17	W —23191A	Condenser, 0.01 mfd. 400 V.
18A	W —32379	Condenser, 0.02 mfd. 200 V.
18B	W —32379	Condenser, 0.02 mfd. 200 V.
19A	W —30321	Condenser, 1.0 mfd. 160 V.
19B	W —30321	Condenser, 1.0 mfd. 160 V.
20Y	G15—33006	Condenser, B. C. Series Osc.
20Z		Condenser, L. F. Series Osc.

Item No.	Part No.	Description
21X		
21Y	G34—33002	Var. Tuning Cond. Gang
21Z		
	—37433B	Dial Drive Assm.
C	—37434A	Dial Face only
	—37551	Dial Hand
	—37584	Second Hand
	—37494	Hand Screw
	—37543	Hand Washer
22	B —33905A	A. C. Cord & Plug
23A	—21876	Resistor, 10,000 Ohms
23B	—21876	Resistor, 10,000 Ohms
24	—22196	Resistor, 20,000 Ohms
25	—21875	Resistor, 100,000 Ohms
26A	—23403	Resistor, 150,000 Ohms
26B	—23403	Resistor, 150,000 Ohms
27	—21455	Resistor, 100,000 Ohms
28A	—23785	Resistor, 500,000 Ohms
28B	—23785	Resistor, 500,000 Ohms
29A	—21454	Resistor, 1.0 Megohm
29B	—21454	Resistor, 1.0 Megohm
30	—26577	Resistor, 3.0 Megohm
31Z		Resistor, 17,500 Ohms
31Y	W —36442	Resistor, 15,000 Ohms
32	G6 —28807	Socket, 80
33A	G80—28807	Socket, 76
33B	G80—28807	Socket, 76
34	G75—28807	Socket, 6D6
35	G25—28807	Socket, 42
38	G47—33070	Socket, 6A7
37	G48—28807	Socket, 6B7
	W —35772	Tube Shield Half
	W —35773	Tube Shield Cap
	W —35774	Tube Shield Base
	W —33072	Socket Cushion
38	330CL—22	Speaker, (Table Model)
	630CL—27	Speaker, (Console Model)
39U		
To	—36271E	Band Change Switch
39Z		
40	G27—26719	Terminal Board Ant.-Grd.
41	G5 —31120	Terminal Board-Speaker
	W —34628	Terminal Board Cover (Speaker)
	W —34627	Terminal Board Insulator
42Z	W —36639A	Tone Control (80,000 Ohms)
42Y		On & Off Switch
43	W —36500	Tuning Meter
44	G10—30745	Power Trans. 60 Cy., 110 V.
	G11—30746	Power Trans. 25 Cy., 110 V.
	G12—30748	Power Trans. 25 Cy., 220 V.
45	W —36056	Volume Control 1.0 Megohm
46	—34019	Resistor, 75,000 Ohms
	B —36515	Escutcheon
	D —38	Escutcheon Screw (3)
	W —36311	Band Change Escutcheon
	W —36310	Escutcheon Indicator (Celluloid)
	W —28760B	Escutcheon Pin
	W —36518	Knob, Bd. Chg. & Tone Control
	W —36519	Knob, Dial
	W —36520A	Knob, Vernier
	W —36521	Knob, Volume Control

NOTE: * First models had condensers mounted externally but eventually placed in G46-32902 Assm.

ALIGNMENT PROCEDURE

All the circuits in this receiver are very accurately adjusted at the factory and should need no further adjustment. However, if it is definitely known that an adjustment is necessary the circuits can be properly aligned only with the use of a modulated signal generator and an output meter.

CONNECTING OUTPUT METER

Connect one terminal of the output meter to the plate and the other terminal to the screen of the 42 output tube. Looking at the bottom of the tube with the filament prongs toward you the plate prong will be the first to the left of the filament prongs and the screen prong will be next to the plate prong. Be sure the meter is protected from D. C. by connecting a condenser (.1 mfd. or larger—not electrolytic) in series with one of the leads.

1. Tuning I-F Amplifier to 450 Kilocycles.

(a) Connect the output of the signal generator through a .02 mfd. condenser to the top cap of the 6A7 tube, leaving the tube's grid clip in place. Connect the ground lead from the signal generator to the receiver chassis. KEEP THE GENERATOR LEADS AS FAR AS POSSIBLE FROM THE GRID WIRES OF THE OTHER SCREEN GRID TUBES.

(b) Set the station selector so that the tuning condenser plates are open. Turn the volume control knob to the right (ON) and turn the tone control knob to the left (TREBLE).

(c) Turn the band selector switch all the way to the left.

(d) Set the signal generator to 450 kilocycles.

(e) Close the middle trimmer condenser on the 1st. I-F transformer.

(f) Adjust the trimmers located on top of the 2nd. I-F transformer for maximum output.

(g) Adjust the top and bottom trimmers of the 1st. I-F transformer for maximum output.

(h) Repeat operations (f) and (g) for more accurate adjustments.

ALWAYS USE THE LOWEST SIGNAL GENERATOR OUTPUT THAT WILL GIVE A REASONABLE OUTPUT METER READING.

(i) Reduce the output of the signal generator and adjust the middle trimmer on the 1st. I-F transformer for maximum output. DO NOT READJUST THE OTHER TRIMMERS.

2. Aligning R-F Amplifier.

(a) When aligning the R-F amplifier the output lead from the signal generator is connected to the "Ant" terminal of the receiver. For the ORANGE, BLACK and GREEN bands a .00025 mfd. condenser must be connected in series with the output lead from the signal generator and for the two high frequency bands a 400 ohm carbon resistor should be used in place of the condenser.

Each band should first be shunt aligned and then series aligned where provision is made for series alignment (Weather Band and Broadcast Band). The band selector switch should be set for the band being aligned and the signal generator should be set to the frequency indicated for each adjustment.

Adjust the "Osc", "R-F" and "Ant" trimmers in the order given for maximum output and then check the adjustments in the same order. NOTE: When aligning the Police and High Frequency Bands care must be exercised so that the circuits will be aligned on the fundamental frequency rather than on the image frequency which is always approximately 900 kilocycles less than the fundamental. To check on this, increase the output of the signal generator approximately ten times and try to tune-in the signal both at the generator frequency as with the station selector for maximum output. Adjust the "series" trimmer while rocking the tuning condenser back and forth slightly, until no further improvement in output can be obtained.

After the "series" alignment of any band has been completed it will be necessary to repeat the "shunt" alignment of that band.

indicated on the station selector dial and at approximately 900 kilocycles below the correct frequency. If the circuits have been properly aligned the signal can be tuned-in at both positions but much stronger at the correct position.

To align the "series" trimmer, set the signal generator to the frequency indicated and then tune-in this signal

(b) Signal Input Frequencies.

	Shunt Alignment	Series Alignment
Weather Band (ORANGE)	400 Kc.	150 Kc.
American Broadcast Band (BLACK)	1400 Kc.	600 Kc.
Police and Amateur Band (GREEN)	4000 Kc.	—
Night H-F Band (RED)	10 Megacycles	—
Day H-F Band (VIOLET)	21 Megacycles	—

SOCKET VOLTAGES

The tube socket voltages are measured from the tube socket contacts to the chassis with a 1000 ohm per volt, 500 volt voltmeter (except filaments) with the receiver in operating condition and no signal input. Readings may vary plus or minus 10% of values given.

©John F. Rider. Publisher

CROSLEY RADIO CORP.

MODEL 815, Battery 8
Schematic

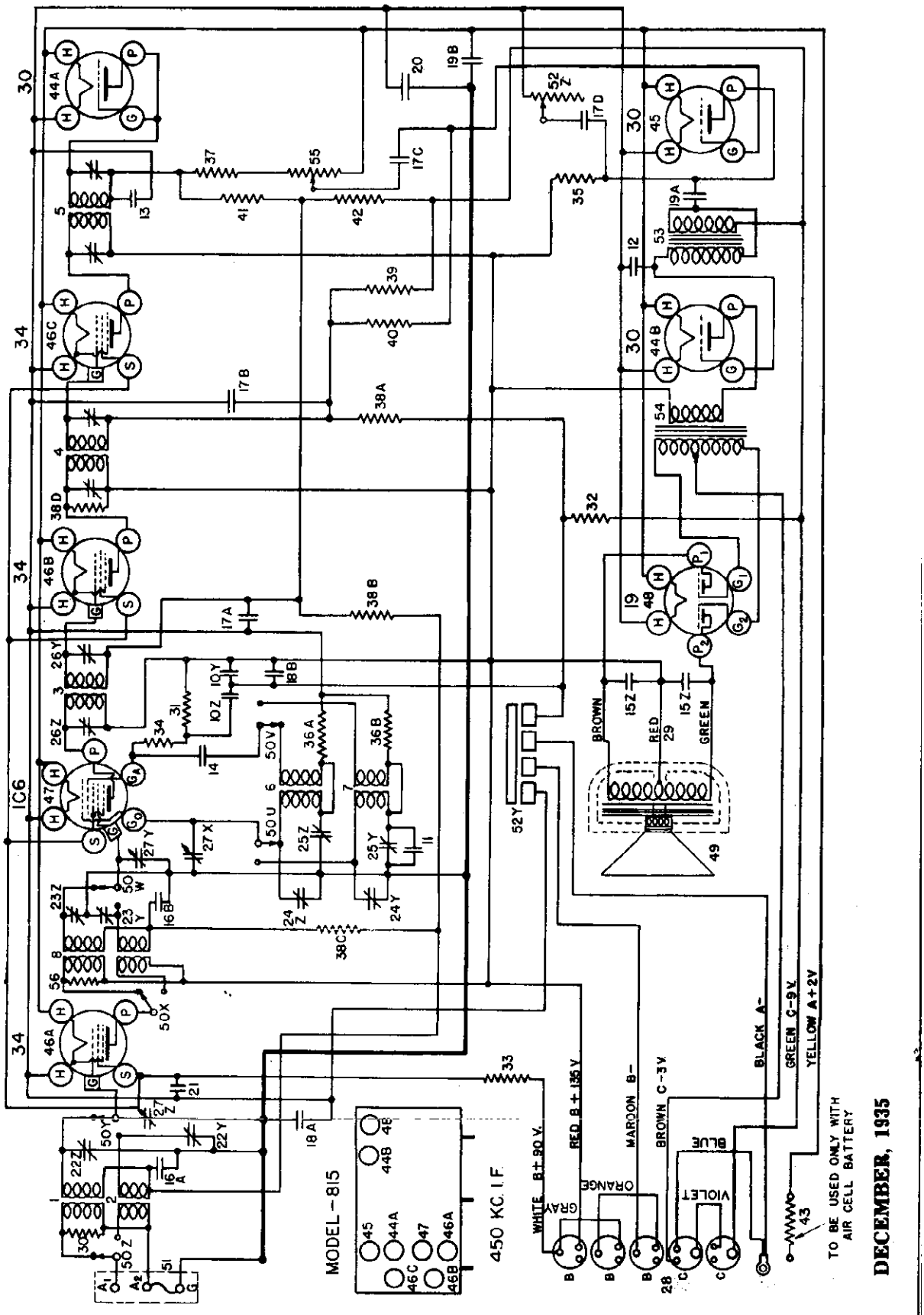

©John F. Rider, Publisher

©John F. Rider Publisher

ALIGNMENT PROCEDURE

All the circuits in this receiver are very accurately adjusted at the factory and normally should need no further adjustment. However, if it is definitely known that an adjustment is necessary the circuits can be properly aligned ONLY with the use of a modulated signal generator and an output meter.

CONNECTING OUTPUT METER

Connect the two terminals of the output meter to the two plates of the 19 Output tube. Be sure the meter is protected from D.C. by connecting a condenser (.1 mfd. or larger—not electrolytic) in series with one of the leads.

1. Tuning I-F Amplifier to 450 Kilocycles.

(a) Connect the output of the signal generator through a .02 mfd. condenser to the top cap of the 1C6 Oscillator-Modulator tube, leaving the tube's grid clip in place. Connect the ground lead from the signal generator to the "GND" terminal of the receiver. KEEP THE GENERATOR LEADS AS FAR AS POSSIBLE FROM THE GRID WIRES OF THE OTHER SCREEN GRID TUBES.

(b) Set the station selector so that the tuning condenser plates are completely out of mesh. Turn the volume control knob to the right (ON).

(c) Turn the band selector switch to the left (High Frequency).

(d) Set the signal generator to 450 kilocycles.

(e) Adjust both trimmers located on top of the 3rd I-F transformer for maximum output. (Screw and nut).

(f) Adjust both trimmers located on top of the 2nd I-F transformer for maximum output.

(g) Adjust both trimmers for the 1st I-F transformer (26Y and 26Z located on end of chassis) for maximum on the station selector dial and at approximately 900 kilocycles below the correct frequency. If the circuits have been properly aligned the signal can be tuned-in at both positions but much stronger at the correct dial setting.

To adjust the "series" trimmers 25Z—Broadcast and output.

(h) Repeat operations (e), (f) and (g) for more accurate adjustments.

ALWAYS USE THE LOWEST SIGNAL GENERATOR OUTPUT THAT WILL GIVE A REASONABLE OUTPUT METER READING.

2. Aligning R-F Amplifier.

(a) When aligning the R-F Amplifier the output lead from the signal generator should be connected through a dummy antenna to the "ANT" terminal of the receiver. For the broadcast band the dummy antenna should be a .00025 mfd. condenser and for the high frequency band this condenser should be replaced by a 400 ohm carbon resistor (Non-Inductive).

Each band should be shunt aligned, series aligned and then shunt aligned again in order given. The band selector switch should be set for the band being aligned and the signal generator should be set to the frequency indicated below for each adjustment.

Adjust the "OSC" (24), "R-F" (23) and "ANT" (22) shunt trimmers, Z—Broadcast and Y—High Frequency Bands, in the order given for maximum output. Retune the station selector to the generator signal for maximum output. Readjust the "R-F" and "Ant" trimmers for maximum output. Do not readjust the "OSC" shunt trimmer.

NOTE: When aligning the high frequency band care should be exercised so that the circuits will be aligned on the fundamental rather than on the image frequency which is approximately 900 kilocycles less than the fundamental. To check on this, increase the output of the signal generator approximately 10 times and try to tune-in the signal both at the generator frequency as indicated 25Y—High Frequency Bands, set the signal generator to the frequency indicated below and then tune-in this signal with the station selector for maximum output. Adjust the series trimmer while rocking the tuning condenser back and forth slightly, until no further improvement in output can be obtained.

(b) Signal Generator Frequencies.

	Shunt Alignment	Shunt Alignment
High Frequency Band	1400 Kc.	600 Kc.
Broadcast Band	15000 Kc.	6000 Kc.

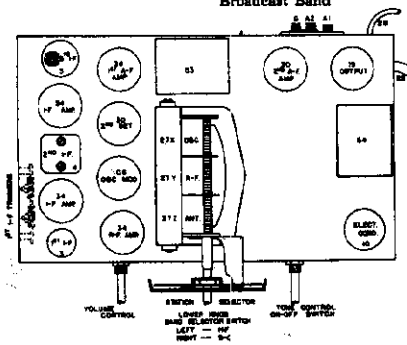

Fig. 2. Top View 815

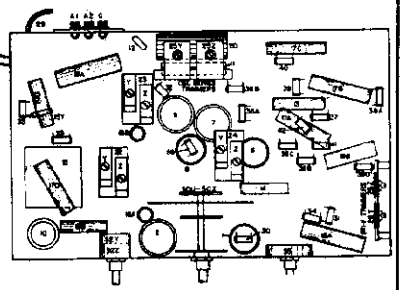

Fig. 3. Bottom View 815

SPECIFICATIONS

The Crosley Model 815 radio is an eight-tube superheterodyne receiver designed for operation from batteries. The method of connecting the battery cable to the batteries is shown on the wiring diagram. The batteries required are: one two-volt storage battery or an air cell battery, three plug-in type 45-volt "B" batteries and two 4½-volt "C" batteries. The frequency ranges covered are from 540 to 1710 kilocycles in the broadcast band and from 5800 to 15,300 kilocycles in the high frequency band.

TUBES AND VOLTAGE LIMITS

The following table gives the functions of the tubes used, together with the voltage readings between the tube socket contacts and "A"—. Voltage readings should be taken with a 1000 ohm per volt, 250 volt voltmeter (except filaments) with volume control full on and no signal input. Filament voltages should be measured with an accurate low range D.C. voltmeter (0 to 10 volts). Voltage limits may vary plus or minus 10% of values given.

TUBE SOCKET VOLTAGE READINGS

Tube	Where Used	H	P	S	G	Ga	Go
34	R. F. Amplifier	2.0	135	67.5	—	—	—
1C6	Osc.-Mod.	2.0	135	67.5	—	85	-5 to -10
34	1st I-F Amplifier	2.0	135	67.5	-3	—	—
34	2nd I-F Amplifier	2.0	135	67.5	-3	—	—
30	Diode Detector	2.0	—	—	—	—	—
30	A-F Amplifier	2.0	70	—	-3	—	—
30	A-F Driver	2.0	135	—	-9	—	—
19	Double Triode Output	2.0	135	—	-1.5	—	—

POWER OUTPUT APPROXIMATELY 2.5 WATTS.
"A" BATTERY DRAIN APPROXIMATELY .74 AMPERES AT 2 VOLTS.
"B" BATTERY DRAIN 20 TO 35 MILLIAMPERES—DEPENDING UPON VOLUME CONTROL ADJUSTMENT.

PARTS LIST—MODEL 815

Figures in first column refer to parts in Diagrams.

Item No.	Part No.	Description
1	G3 —32980	Ant. Coil 540-1720 Kc.
	W —32625A	Coil Shield
	W —28891	Insulating Washer
	W —31549C	Retaining Ring
	W —30200	Coil Socket
2	G28—33090	Ant. Coil, 5.7-15.5 Mc.
	W —30802A	Coil Shield
	W —30802A	Retaining Ring
	W —32438	Centering Washer
3	G6 —32004	1st I. F. Coil (only)
	G1 —34084	Shield
	W —30891	Insulating Washer
4	G21—32004	2nd I. F. Assm.
5	G22—32004	3rd I. F. Assm.
6	G2 —32382	Osc. Coil, 540-1720 Kc.
	W —32625A	Coil Shield
	W —28891	Insulating Washer
	W —31541C	Retaining Ring
	W —32290	Coil Socket
7	G21—32082	Osc. Coil, 5.7-15.5 Mc.
	W —30802A	Coil Shield
	W —30026A	Retaining Ring
	W —32438	Centering Washer
8	G2 —32091	R. F. Coil, 540-1720
	W —25094B	Coil Shield
	W —28891	Insulating Washer
	W —31541C	Retaining Ring
	W —32290	Coil Socket
9	G18—32091	R. F. Coil, 5.7-15.5 Mc.
	W —30802A	Coil Shield
	W —30026A	Retaining Ring
	W —33438	Centering Washer
10Z	W —33090	Condenser, S. Mfd. 200 V.
10Y	W —32979	Condenser, S. Mfd. 200 V.
11	G3 —34000	Condenser, 2200 Mmfd., 300 V.
12	G1 —34002	Condenser, 0.00025 Mfd., 200 V.
13	W —27982	Condenser, 0.0005 Mfd., 200 V.
14	W —25435	Condenser, 0.003 Mfd., 400 V.
15Z	W —31138	Condenser, 0.006 Mfd., 400 V.
15Y		Condenser, 0.006 Mfd., 400 V.
16A	W —32379	Condenser, 0.02 Mfd., 200 V.
16B	W —32379	Condenser, 0.02 Mfd., 200 V.
17A	W —27216	Condenser, 0.05 Mfd., 200 V.
17B	W —27216	Condenser, 0.05 Mfd., 200 V.
17C	W —27216	Condenser, 0.05 Mfd., 200 V.
17D	W —27216	Condenser, 0.05 Mfd., 200 V.
18A	W —24049B	Condenser, 0.1 Mfd., 200 V.
18B	W —24049B	Condenser, 0.1 Mfd., 200 V.
19A	W —29816A	Condenser, 0.25 Mfd., 200 V.
19B	W —29816A	Condenser, 0.25 Mfd., 200 V.
20	W —30521A	Condenser, 1.0 Mfd., 180 V.
21	W —28869	Condenser, 2.0 Mfd., 200 V.
22Z	G1 —33006	2 Section Ant. Trimmer
22Y		
23Z	G9 —33008	2 Section R. F. Trimmer
23Y		
24Z	G18—33009	2 Section Osc. Trimmer
24Y		
25Z	G20—33006	2 Section Osc. Series Trimmer
25Y		
26Z	G6 —33006	2 Section 1st I. F. Trimmer
26Y		
27Z	G33—33002	3 Section Tuning Condenser Gang
27Y		
	MG26—36403	Dial Drive Complete
	C —35133	Dial Face
	W —37198	Dial Pointer
	W —32253	Pointer Nut (2)
	C —36517C	Battery Cable
28	W —28164	Cable Clamp
	W —31008	Speaker Cable
29	—31064	Resistor, 4,000 Ohm, ½ W.
30	—27121	Resistor, 5,000 Ohm, ½ W.
31	—23966	Resistor, 7,500 Ohm, ½ W.
32	—24834	Resistor, 10,000 Ohm, ½ W.
33	—21676	Resistor, 15,000 Ohm, ½ W.
34	—22195	Resistor, 20,000 Ohm, ½ W.
35	—21823	Resistor, 100,000 Ohm, ½ W.
36A	—21875	Resistor, 200,000 Ohm, ½ W.
36B	—23403	Resistor, 250,000 Ohm, ½ W.
37	—21455	Resistor, 300,000 Ohm, ½ W.
38A	—21455	Resistor, 300,000 Ohm, ½ W.
38B	—21455	Resistor, 300,000 Ohm, ½ W.
38C	—21455	Resistor, 300,000 Ohm, ½ W.
38D	—21455	Resistor, 300,000 Ohm, ½ W.
39	—23765	Resistor, 500,000 Ohm, ½ W.
40	—21454	Resistor, 1.0 Megohm, ½ W.
41	—26577	Resistor, 3.0 Megohm, ½ W.
42	—26578	Resistor, 5.0 Megohm, ½ W.
43	G4 —23500	Resistor, 0.25 Megohm (Wire Wound)
44A	G9 —28807	Socket 30
44B	G8 —28807	Socket 30
45	G5 —33070	Socket 30
46A	G31—28807	Socket 34
46B	G32—28807	Socket 34
46C	G33—28807	Socket 34
47	G34—33070	Socket 1C6
48	G44—28807	Socket 19
	W —33072	Socket Cushion (2)
	W —27961A	Tube Shield Base (1)
	W —30221	Tube Shield (1)
49	42—PS—5	Speaker
50Z		
to	—36456	Band Change Switch
50C		
	G27—28729	Ant. Terminal Board
		Tone Control
52Z	—34495	On-Off Switch
52Y		
	MG40—36498	1st Audio Transformer
	MG41—36498	2nd Audio Transformer
	—32002	Volume Control (1 Meg.)
	—29581	Resistor, 15,000 Ohm, ½ W.
	—33526	Escutcheon
	W —33084	Escutcheon Gasket
	—28	Escutcheon Screw (4)
	W —33081	Knob (1)
	W —31395B	Knob (4)

CROSLEY RADIO CORP.

MODEL 816
Schematic, Parts

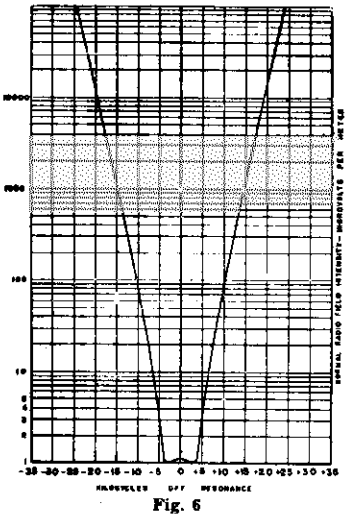

Fig. 6

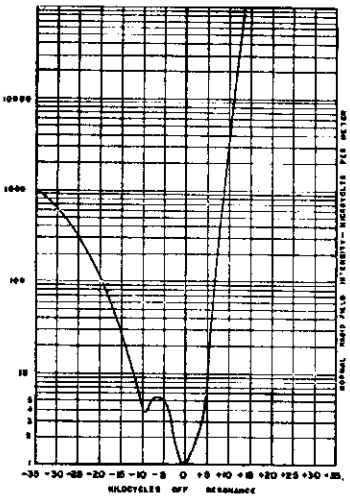

Fig. 5

May, 1936

PARTS LIST—MODEL 816

Figures in first column refer to parts in Diagrams.

Item No.		Part No.	Description
37		—36321	Resistor, 400,000 Ohm ½W. Insulated
38		—37245	Resistor, 1.5 Megohm ½W. Carbon
39	W	—24537	Resistor, 60 Ohm ½W. Flexible
40A	W	—28589	Resistor, 350 Ohm ½W. Flexible
40B	W	—28589	Resistor, 350 Ohm ½W. Flexible
41	W	—23013	Resistor, 2,000 Ohm 1½W. Flexible
42	W	—37987	Resistor, 15,000 Ohm 1W. Wire Wound
43Z	W	—41484	1000 Ohm Candohm
43Y			7000 Ohm
43X			3500 Ohm
43W			15000 Ohm
44A	G151	—36400	Socket Type 6K7
44B	G151	36400	Socket Type 6K7
45	G156	—36400	Socket Type 6A8
46	G164	—36400	Socket Type 6R7
47A	G165	—36400	Socket Type 6N6
47B	G165	—36400	Socket Type 6N6
48	G154	—36400	Socket Type 5Z4
49	G167	—36400	Socket Type 5 Prong (W41187 tube)
	W	—27981A	Tube Shield Base
	W	—40911	Tube Shield
50			Speaker 542 CJ 4
51	C	—40910	Band Selector Switch
52	W	—41486	Phantom Control Switch
53	G26	—26719	Ant. & Grid Terminal Assembly
54Z		—37966	Tone Control
54Y			A-C Switch
55		—41506	Power Transformer 110 V. 60 Cy.
		—41507	Power Transformer 110 V. 25 Cy.
		—41508	Power Transformer 220 V. 25 Cy.
57	G53	—24628	Audio Output Transformer
58Z	W	—41259	Tuning Meter
58Y	W	—41464	Tuning Meter Bulb
59		—41301	Volume Control 3 Megohm tap 1 Meg
60	G1	—34002	Condenser .00025 Mfd. Molded
61	W	—27216	Condenser .05 Mfd. 200 V.
62	W	—34713	Condenser .006 Mfd. 160 V.
63	W	—32379	Condenser .02 Mfd. 200 V.
64	G13	—29535	Compensator Choke
65		—22196	Resistor 20,000 Ohm ½W. Carbon
66		—35930	Resistor 200,000 Ohm ½W. Insulate
67		—23785	Resistor 500,000 Ohm ½W. Cabron
	C	—37894	Escutcheon
	G	—37896A	Escutcheon Retaining Spring
	B	—37898	Glass Lens (Bezel)
	B	—37897	Lens Retaining Spring
	W	—37339	Knob (3)
	W	—40192B	Knob (2)
	W	—36117	Rubber Mtg. Foot
1ABC	W	—37922	Dial Light
	G3	—37965	Dial Light Socket Assembly
	W	—40570	Dial Light Shield (2)
2	G110	—32000	Ant. Coil—B-C-B.
3	G111	—32000	Ant. Coil—Pol-B.
4	G112	—32000	Ant. Coil—H-F-B.
5	G76	—32001	R-F. Coil—B-C-B.
6	G83	—32001	R-F. Coil—Pol-B.
7	G81	—32001	R-F. Coil—H-F-B.
8	G98	—32002	Osc. Coil—B-C-B.
9	G99	—32002	Osc. Coil—Pol-B.
10	G107	32002	Osc. Coil—H-F-B.
11	G112	32004	1st I-F Assembly
12	G114	32004	2nd I-F Assembly
13	G12	—29535	A-F Driver Choke
14	W	—30055	Condenser, 35 Mfd. 400 V. Electrolytic
15	W	—41080	Condenser, 12 Mfd. 200 V. Electrolytic
16	W	—41081	Condenser, 16 Mfd. 250 V. Electrolytic
17	W	—41598	Condenser, 50 Mfd. 25 V. Electrolytic
18	G6	—34002	Condenser, .000025 Mfd. Molded
19A	G2	—34002	Condenser, .0001 Mfd. Molded
19B	G2	—34002	Condenser, .0001 Mfd. Molded
19C	G2	34002	Condenser, .0001 Mfd. Molded
20	W	—35139	Condenser, .001 Mfd. 400 V.
21	W	—30805	Condenser, .01 Mfd. 400 V.
22A	W	—36541	Condenser, .02 Mfd. 200 V.
to	W	—36541	Condenser, .02 Mfd. 200 V.
22F	W	—36541	Condenser, .02 Mfd. 200 V.
23	W	—30488	Condenser, .02 Mfd. 400 V.
24	W	—35936	Condenser, .05 Mfd. 200 V.
25	W	—23615	Condenser, .05 Mfd. 400 V.
26	W	—29910A	Condenser, .25 Mfd. 200 V.
27		—40769	B-C Osc. Series Trimmer Condenser
28	G7	—34000	Pol. Osc. Series Fixed Cond. (1450Mmfd.)
29	G20	—34000	H-F Osc. Series Fixed Cond. (4910Mmfd.)
30	W	—35951	3 Section Shunt Trimmer Cond. Assy.
31	G52	—33002	3 Section Var. Tuning Condenser
	MG-22	—41475	Dial Drive Assembly Complete
	C	—41501	Dial
		—41136A	Dial Mask
		—40485	Long Hand
		—41145	Short Hand
	W	—40486	Hand Mtg. Screw
		—41157	Driver Belt
32	B	—33906	Power Cord & Plug
33		—24990	Resistor, 25,000 Ohm ½W. Carbon
34		—21237A	Resistor, 60,000 Ohm ½W. Carbon
35A		35600	Resistor, 100,000 Ohm ½W. Insulated
35B		35600	Resistor, 100,000 Ohm ½W. Insulated
36		—23403	Resistor, 150,000 Ohm ½W. Carbon

©John F. Rider, Publisher

MODEL 816
Socket, Trimmers
Voltage, Chassis
Alignment

CROSLEY RADIO CORP.

SPECIFICATIONS

The Crosley Model 816 radio is an eight-tube superheterodyne receiver and uses either glass or metal tubes, except the Phantom Conductor (Auto-Expressionator) tube which is always glass and the 5Z4 rectifier which should always be the MG type. NOTE: If glass tubes are replaced with metal tubes or metal tubes replaced with glass tubes it will be necessary to completely realign the circuits of the receiver because of the differences in inter-electrode capacities. Chassis are available either with a standard 110 Volt—60 Cycle, 110 Volt—25 Cycle or 220 Volt—25 Cycle Power Transformer.

The tuning range of the receiver is from 540 to 19000 Kilocycles and is divided into three bands as follows:

BLUE	540-1900 Kc. or 555-158 Meters (Standard American Broadcast)
RED	1.9- 6.5 Mc. or 158- 46 Meters (Police and Amateurs)
GREEN	6.0- 19.0 Mc. or 50- 16 Meters (High Frequency)

SOCKET VOLTAGES

The tube socket voltages are measured from the tube socket contacts to the chassis with a 1000 ohm per volt, 300 volt D. C. voltmeter (except filaments) with the receiver in operating condition and no signal input. The filaments should be measured with an accurate low range A. C. voltmeter. Readings may vary plus or minus 10% of values given.

PHANTOM CONDUCTOR (Auto Expressionator)

The Phantom Conductor tube, Illustration No. 49, is connected across the voice coil of the speaker. When operating its resistance varies so as to increase the volume of loud tones, thus giving a wider volume range to reproduced music which tends to compensate for the electrical limitations of broadcasting equipment.

PHONOGRAPH PICKUP

Chassis equipped with a 25 cycle power transformer also have three terminals on the back for connecting a phonograph pickup. These terminals are marked P C S and the pickup is connected through a double pole single throw switch to these terminals as shown in Fig. 7.

ALIGNMENT PROCEDURE

This is a High Fidelity receiver and in order to secure maximum performance the alignment of its circuits should be done with precision instruments.

Tuning I-F Amplifier to 450 Kilocycles.

The I-F amplifier employs two triple-tuned I-F transformers and under no condition should their trimmer condensers be readjusted just to determine if they are properly tuned. Fig. 5 shows the selectivity curve of a receiver whose I-F amplifier was slightly mis-tuned while Fig. 6 shows a curve made from actual measurements of a receiver which was properly aligned with the use of an oscilloscope. (See Note 3, next page).

1. Conventional Method—

(a) Connect one terminal of the output meter to P2 of one of the 6N6 Output tubes and the other terminal through a .1 mf., or larger, condenser—Not Electrolytic —to P2 of the other Output tube.

(b) Connect the output of the signal generator through a .02 mf. condenser, to the top cap of the 6K7 I-F Amp. tube; leaving the tube's grid clip in place. Connect the ground lead from the signal generator to the GND. terminal of the receiver chassis. KEEP THE GENERATOR OUTPUT LEAD AS FAR AS POSSIBLE FROM THE GRID LEADS OF THE OTHER SCREEN GRID TUBES.

(c) Set the band selector switch to the Broadcast Band and rotate the station selector to approximately 60 on the dial. Turn the volume control knob to the right (ON), turn the tone control knob to the left (TREBLE), and turn the Phantom Control Switch to the left (OFF).

(d) Set the signal generator to 450 Kilocycles.

(e) Adjust the trimmer condensers on the top of the 2nd. I-F transformer for maximum output. Fig. 2 (Item 12).

ALWAYS USE THE LOWEST SIGNAL GENERATOR OUTPUT THAT WILL GIVE A REASONABLE READING ON THE OUTPUT METER.

(f) Transfer the output lead of the signal generator from the 6K7 tube to the top cap of the 6A8 Osc.-Mod. tube, leaving the tube's grid clip in place.

(g) Close the middle trimmer condenser on the 1st. I-F transformer (Tert. Fig. 4) so that it is moderately tight. (DO NOT FORCE ADJUSTING SCREW).

(h) Adjust the top (Sec) and then the bottom (Pri) trimmers of the 1st. I-F transformer for maximum output.

(i) Transfer the lead of the signal generator from the 6A8 tube to the "ANT" terminal of the receiver and increase the output of the signal generator if necessary.

(j) Check the adjustment of the bottom (Pri) trimmer of the 1st. I-F transformer. Then adjust the middle trimmer by opening until maximum output is obtained. DO NOT READJUST TOP OR BOTTOM TRIMMERS AFTER THE MIDDLE TRIMMER HAS BEEN ADJUSTED.

2. Oscilloscope Method.

(a) Connect the output of the signal generator through a .02 mf. condenser to the top cap of the 6K7 I-F amplifier tube, leaving the tube's grid clip in place. Connect the ground lead from the signal generator to the receiver chassis. KEEP THE GENERATOR OUTPUT LEAD AS FAR AS POSSIBLE FROM THE GRID LEADS OF THE OTHER SCREEN GRID TUBES.

(b) Connect the vertical plates of the cathode ray oscilloscope to the receiver as follows: The binding post marked "GND" should be connected to the receiver chassis and the other binding post should be connected to the plate terminal of the 6R7 tube. (Be sure the oscilloscope is protected from D. C. by connecting a condenser, 0.1 to .05 mf., in series with the lead to the plate of the 6R7 tube).

(c) Set the band selector switch to the Broadcast Band and rotate the station selector to approximately 60 on the dial. The exact setting should be at a position where no broadcast signal will be received. Turn the volume control to the right (ON), turn the tone control to the left (TREBLE) and turn the Phantom Conductor switch to the left (OFF).

(d) Set the signal generator to 450 kilocycles. See instructions supplied with signal generator and oscilloscope.

(e) Adjust the trimmer condensers located on top of the 2nd. I-F transformer for maximum amplitude and symmetry of the selectivity curve on the resonance line (R).

NOTE: Keep the signal generator output as low as possible in order to prevent AVC action in the receiver.

(f) Transfer the output lead of the signal generator from the 6K7 tube to the top cap of the 6A8 oscillator-modulator tube, leaving the tube's grid clip in place.

(g) Close the middle trimmer (TERT) of the 1st. I-F transformer so that it is moderately tight. (Do not force adjustment screw).

(h) Increase the output of the signal generator and adjust the top trimmer (Sec) of the 1st. I-F transformer for maximum symmetry and amplitude.

(i) Adjust the bottom trimmer (Pri) of the 1st. I-F transformer for maximum amplitude.

(j) Reduce the output of the signal generator and adjust the middle trimmer of the 1st. I-F transformer for maximum symmetry and amplitude.

Aligning R-F Amplifier.

The R F amplifier can best be aligned in the conventional manner, using a modulated signal generator and output meter.

When aligning the R-F amplifier the output lead of the signal generator is connected to the antenna terminal of the receiver. For the BLUE and RED bands a .00025 mf. condenser must be in series with the output lead of the signal generator and for the high-frequency band a 400 Ohm carbon resistor should be used in place of the condenser.

Each band should be shunt aligned and then series aligned, where provision is made for series alignment (BLUE band). The band selector switch should be set for the band being aligned and the signal generator should be set to the frequency indicated (c) for each adjustment.

(a) Adjust the "Osc," "R-F" (Fig. 4) and "Ant." (Fig. 2) shunt trimmers in the order given for maximum output. Readjust the station selector slightly so that the generator signal is tuned-in with maximum output and then check the adjustments of the "R-F" and "Ant." trimmers in the order given. DO NOT READJUST THE "OSC" TRIMMER.

NOTE: When shunt aligning the RED and GREEN bands care must be exercised so that the circuits will be aligned on the fundamental frequency rather than on the image frequency which is approximately 900 Kilocycles less than the fundamental frequency. To check on this, increase the output of the signal generator ten times or more and try to tune-in the signal both at the generator frequency as indicated on the station selector dial and at approximately 900 Kilocycles less than the correct frequency. If the circuits have been properly aligned the signal can be tuned-in at both positions but much stronger at the correct position.

(b) To align the B-C "OSC" series trimmer, Illus. 27, Fig. 4, set the signal generator to 600 Kilocycles and then tune-in this signal with the station selector for maximum output. While the series trimmer is being adjusted rotate the station selector back and forth slightly until no further improvement in output can be obtained.

(c) SIGNAL INPUT FREQUENCIES

		Shunt Aligned	Series Aligned
American Broadcast	(BLUE	1700 Kc.	600 Kc.
Pol. & Amateur	(RED)	6000 Kc.	
High-Frequency	(GREEN)	18000 Kc.	

NOTE 3: The high frequency oscillator on this receiver is neutralized by the addition of some small capacity coupling between the oscillator grid and the R-F grid of the 6A8 tube. This is accomplished by loosely wrapping a piece of insulated hook-up wire around the R-F grid lug and connecting it to the oscillator grid lug on the band selector switch.

It is necessary on some sets to adjust or even remove this coupling, in which case the wire should be unwrapped and threaded through the extra hole in the grid end of the R-F coil.

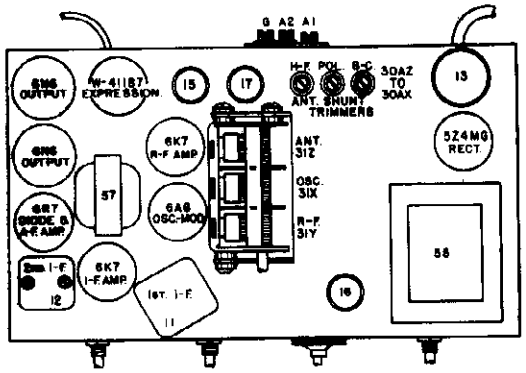

Fig. 2. Top View

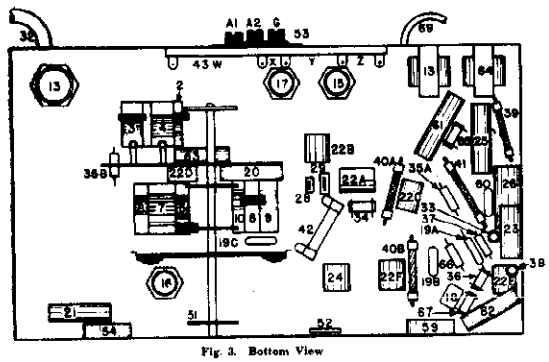

Fig. 3. Bottom View

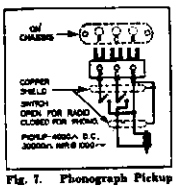

Fig. 7. Phonograph Pickup

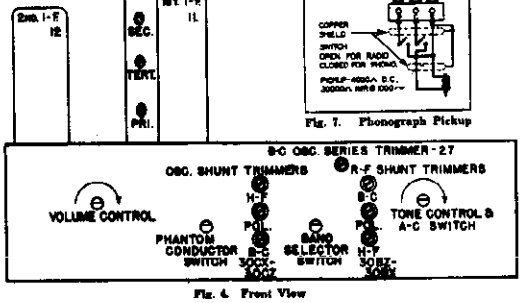

Fig. 4. Front View

TUBE SOCKET VOLTAGE READINGS

Tube	Function	H	P	P_1	S	Sa	G	K	Ga	Ga
6K7	R-F Amplifier	6.3	240	—	100	4.0	0	4.0	—	—
6A8	Osc-Modulator	6.3	245	—	130	—	0	4.8	180	-5 to -30
6K7	I-F Amplifier	6.3	280	—	130	4.0	0	4.0	—	—
6R7	Diode-Detector & A-F Amplifier	6.3	130	—	—	—	0	4.0	—	—
6N6	(2) Output	6.3	345	230	—	—	0	4.0	—	—
5Z4MG	Rectifier	5.0	345	—	—	—	—	—	—	—

W-41187 Phantom Conductor Tube—All Voltages Variable

Voltage drop across speaker field 100 volts.
Power Output approximately 5 watts.
Power Consumption approximately 115 watts.
All readings taken on 117.5 volt power supply.

©John F. Rider, Publisher

MODEL 855, Merrimac
Schematic
Voltage, Socket

CROSLEY RADIO CORP.

SPECIFICATIONS

The Crosley Model 855 radio is an eight-tube superheterodyne receiver using all metal tubes. It is available or adaptable for operation on A-C lines as follows: 110 V—60 cycles, 110 V—25 cycles and 220 V—25 cycles.

It is a three band receiver and the dial is divided into three sections as follows:

BLACK— 540- 1,625 kilocycles
GREEN—1,625- 4,700 kilocycles
RED —5,250-15,300 kilocycles

The positions on the band selector switch are in the above order, reading from right to left.

NOVEMBER, 1935

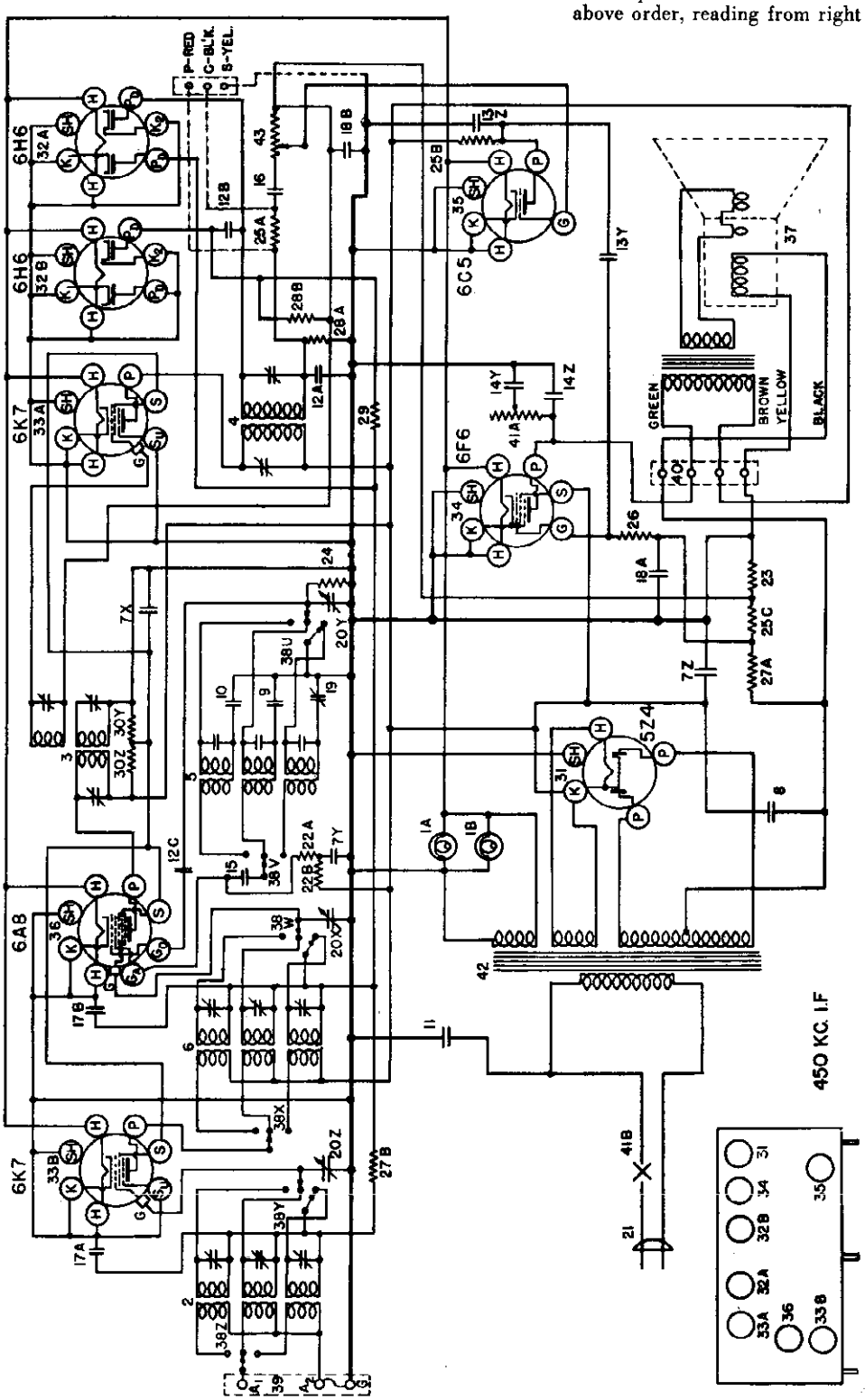

TUBE SOCKET VOLTAGE READINGS

Tube	Function	H	P	S	Su	G	K	Go	Ga
6K7	R-F Amplifier	6.3	245	110	0	-3	0	—	—
6A8	Osc.-Mod.	6.3	245	110	—	-3	0	-5 to -15	175
6K7	I-F Amplifier	6.3	245	110	0	-3	0	—	—
6H6	Detector	6.3	—	—	—	—	0	—	—
6H6	AVC	6.3	—	—	—	—	0	—	—
6C5	A-F Amplifier	6.3	35	—	—	-3	0	—	—
6F6	Output	6.3	235	245	—	-16	0	—	—
5Z4	Rectifier	5.0	250	—	—	—	—	—	—

Power Consumption Approximately 60 Watts. Measured on 117.5 Volt Line—60 Cycles A. C.

©John F. Rider, Publisher

©John F. Rider, Publisher

ALIGNMENT PROCEDURE

All the circuits in this receiver are very accurately adjusted at the factory and should need no further adjustment. However, if it is definitely known that an adjustment is necessary the circuits can be properly aligned only with the use of a modulated signal generator and an output meter.

CONNECTING OUTPUT METER

Connect one terminal of the output meter to the plate and the other terminal to the screen of the 6F6 output tube. Be sure the meter is protected from D.C. by connecting a condenser 1.1 mfd. or larger—not electrolytic) in series with one of the leads.

1. Tuning I-F Amplifier to 450 Kilocycles.

(a) Connect the output of the signal generator through a .02 mfd. condenser to the top cap of the 6A8 tube, leaving the tube's grid clip in place. Connect the ground lead from the signal generator to the receiver chassis. KEEP THE GENERATOR OUTPUT LEAD AS FAR AS POSSIBLE FROM THE OTHER SCREEN GRID TUBES.

(b) Set the station selector so that the tuning condenser plates are open. Turn the volume control knob to the right (ON) and turn the tone control knob to the left (TREBLE).

(c) Turn the band selector swich all the way to the left.

(d) Set the signal generator to 450 kilocycles.

(e) Close the middle trimmer condenser on the 1st. I-F transformer.

(f) Adjust the trimmers located on top of the 2nd. I-F transformer for maximum output.

(g) Adjust the top and bottom trimmers of the 1st. I-F transformer for maximum output.

(h) Repeat operations (f) and (g) for more accurate adjustments.

ALWAYS USE THE LOWEST SIGNAL GENERATOR OUTPUT THAT WILL GIVE A REASONABLE OUTPUT METER READING.

(i) Reduce the output of the signal generator and adjust the middle trimmer on the 1st. I-F transformer for maximum output. DO NOT READJUST THE OTHER TRIMMERS.

2. Aligning R-F Amplifier.

(a) When aligning the R-F amplifier the output lead from the signal generator is connected to the "Ant" terminal of the receiver. For the BLACK and GREEN bands a .00025 mfd. condenser must be connected in series with the output lead from the signal generator and for the high frequency band a 400 ohm carbon resistor should be used in place of the condenser.

Each band should first be shunt aligned and then series aligned where provision is made for series alignment (Broadcast band). The band selector switch should be set for the band being aligned and the signal generator should be set to the frequency indicated for each adjustment.

Adjust the "Osc", "R-F" and "Ant" trimmers in the order given for maximum output and then check the adjustments in the same order. NOTE: When aligning the Police and High Frequency Band care must be exercised so that the circuits will be aligned on the fundamental frequency rather than on the image frequency which is approximately 900 kilocycles less than the fundamental. To check on this increase the output of the signal generator approximately ten times and try to tune-in the signal both at the generator frequency as indicated on the station selector dial and at approximately 900 kilocycles below the correct frequency. If the circuits have been properly aligned the signal can be tuned-in at both positions but much stronger at the correct position.

To align the "series" trimmer set the signal generator to the frequency indicated and then tune-in this signal with the station selector for maximum output. Adjust the "series" trimmer while rocking the tuning condenser back and forth slightly, until no further improvement in output can be obtained.

After the "series" alignment of the broadcast band has been completed it will be necessary to check the "shunt" alignment of that band.

(b) Signal Input Frequencies.

	Shunt Alignment	Series Alignment
American Broadcast Band (BLACK)	1400 Kc.	600 Kc.
Police and Amateur Band (GREEN)	4000 Kc.	—
Night H-F Band (RED)	10 Megacycles	—

SOCKET VOLTAGES

The tube socket voltages are measured from the tube socket contacts to the chassis with a 1000 ohm per volt, 500 volt voltmeter (except filaments) with the receiver in operating condition and no signal input. Readings may vary plus or minus 10% of values given.

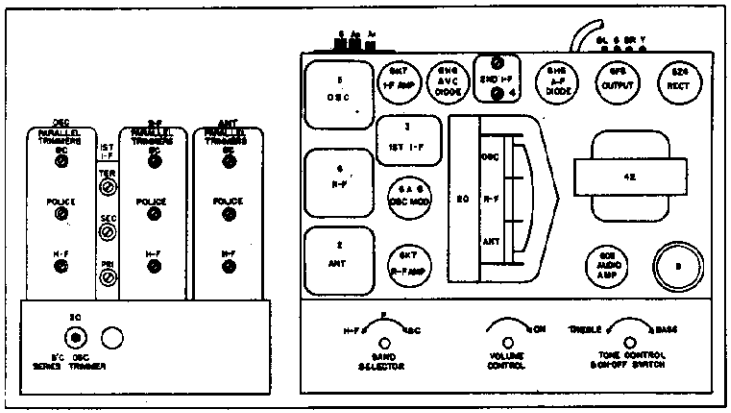

Fig. 2. Top View

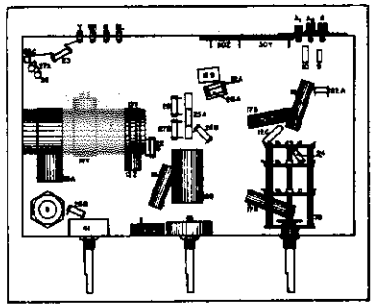

Fig. 3. Bottom View

PARTS LIST—MODEL 855

Figures in first column refer to parts shown in diagrams.

Item No.	Part No.	Description
1A	G4 —27134	Dial Light Socket Assm.
1B	G4 —27134	Dial Light Socket Assm.
2	G14 —32000	Ant. Coil, Assm. Complete
	G46 —32000	Ant. Coil, S. W. Band
	G13 —32000	Ant. Coil, Police Band
	G44 —32000	Ant. Coil, Broadcast Band
	G6 —36031	Coil Support Base
	W —36032	Trimmer Condenser Assm.
	G4 —36031	Coil Shield
3	G64 —32004	1st I. F. Trans.
4	G65 —32004	2nd I. F. Trans.
5	G42 —32002	Osc. Coil Assm. Complete
	G58 —32002	Osc. Coil, S. W. Band
	G36 —32002	Osc. Coil, B. C. Band
	G37 —32002	Osc. Coil, P. Band
	G7 —36031	Coil Support Base
	W —36032	Trimmer Condenser Assm.
	G5 —36031	Coil Shield
6	G61 —32001	R. F. Coil Assm. Complete
	G45 —32001	R. F. Coil, S. W. Band
	G46 —32001	R. F. Coil, P. Band
	G54 —32001	R. F. Coil, B. C. Band
	G6 —36031	Coil Support Base
	W —36032	Trimmer Condenser Assm.
	G4 —36031	Coil Shield
7Z, 7Y, 7X	W —36056	Condenser, 8 mfd. 450 V. Condenser, 4 mfd. 350 V. Condenser, 4 mfd. 250 V.
8	W —36055	Condenser, 25 mfd. 400 V.
9	G1 —34000	Condenser, .00145 mfd.
10	G12 —34000	Condenser, .004725 mfd.
11	W —30805	Condenser, .01 mfd. 400 V.
12A	G2 —34002	Condenser, 100 mmf.
12B	G2 —34002	Condenser, 100 mmf.
12C	G2 —34002	Condenser, 100 mmf.
13Z, 13Y	W —25537A	Condenser, 0.001 mfd. 400 V. Condenser, 0.03 mfd. 400 V.
14Z, 14Y	W —31052	Condenser, 0.004 mfd. 400 V. Condenser, 0.05 mfd. 400 V.
15	W —32378	Condenser, 0.01 mfd. 400 V.
16	W —32191A	Condenser, 0.01 mfd. 400 V.
17A	W —32379	Condenser, 0.02 mfd. 200 V.
17B	W —32379	Condenser, 0.02 mfd. 200 V.
18A	W —30321A	Condenser, 1.0 mfd. 160 V.
18B	W —30321A	Condenser, 1.0 mfd. 160 V.
19	G10 —33005	Condenser, Trim. (Osc. B. C. Bd)
20Z, 20Y, 20X	G53 —33002	Var. Tuning Condenser Gang
	MG21—36045	Dial Drive Assm.
	C —36088	Dial
	W —37198	Dial Hand
	W —32293	Dial Hand Nut

Item No.	Part No.	Description
21	B —33905A	Cord & Plug
21A	—21876	Resistor, 10,000 Ohms
21B	—21876	Resistor, 10,000 Ohms
23	—22196	Resistor, 20,000 Ohms
24	—21875	Resistor, 100,000 Ohms
25A	—23403	Resistor, 150,000 Ohms
25B	—23403	Resistor, 150,000 Ohms
25C	—23403	Resistor, 150,000 Ohms
26	—21455	Resistor, 300,000 Ohms
27A	—23785	Resistor, 500,000 Ohms
27B	—23785	Resistor, 500,000 Ohms
28A	—21454	Resistor, 1 Megohm
28B	—21454	Resistor, 1 Megohm
29	—26577	Resistor, 3 Megohm
30Z, 30Y	W —35983	Resistor, 8,500 Ohms Resistor, 25,000 Ohms
31	G154—36400	Socket, 57A
31A	G155—36800	Socket, 6H8
32B	G155—36400	Socket, 6H6
33A	G151—36800	Socket, 6K7
33B	G151—36400	Socket, 6K7
34	G153—36400	Socket, 6F6
35	G152—36400	Socket, 6C5
36	MG45—36791	Socket, 6A8 (Cushion)
	G156—36800	Socket only
	W —33072	Socket Cushion only
	W —38828	Socket Plate only
37	518BL—18	Speaker, (Table Model)
	518CL—22M	Speaker, (Console Model)
38Z To 38U	—38058B	Band Change Switch
39	G27 —26719	Ant. Grd. Terminal
40	G8 —31128	Speaker Terminal
	W —34627	Speaker Term. Cover Insulator
	W —39028	Speaker Terminal Cover
	G28 —28719	Phono. Pickup Terminal Board (25 cy sets)
41A, 41B	—38082	Tone Control On-Off Switch
42	G6 —30745	Power Trans. 110 V. 60 Cy.
	G7 —30745	Power Trans. 110 V. 25 Cy.
	G6 —30745	Power Trans. 220 V. 25 Cy.
43	—36060	Volume Control, 1 Megohm
	W —37340	Knob (Pointer Notch)
	W —37339	Knob
	W —38518	Knob (Tall)
	W —38521	Knob (2)
	B —33528C	Escutcheon
	W —33984	Escutcheon Gasket
	W —38309	Escutcheon Indicator
	W —38312	Band Change Plate
	W —36313	Tone Control Plate

CROSLEY RADIO CORP.

MODEL 865
Schematic
Voltage

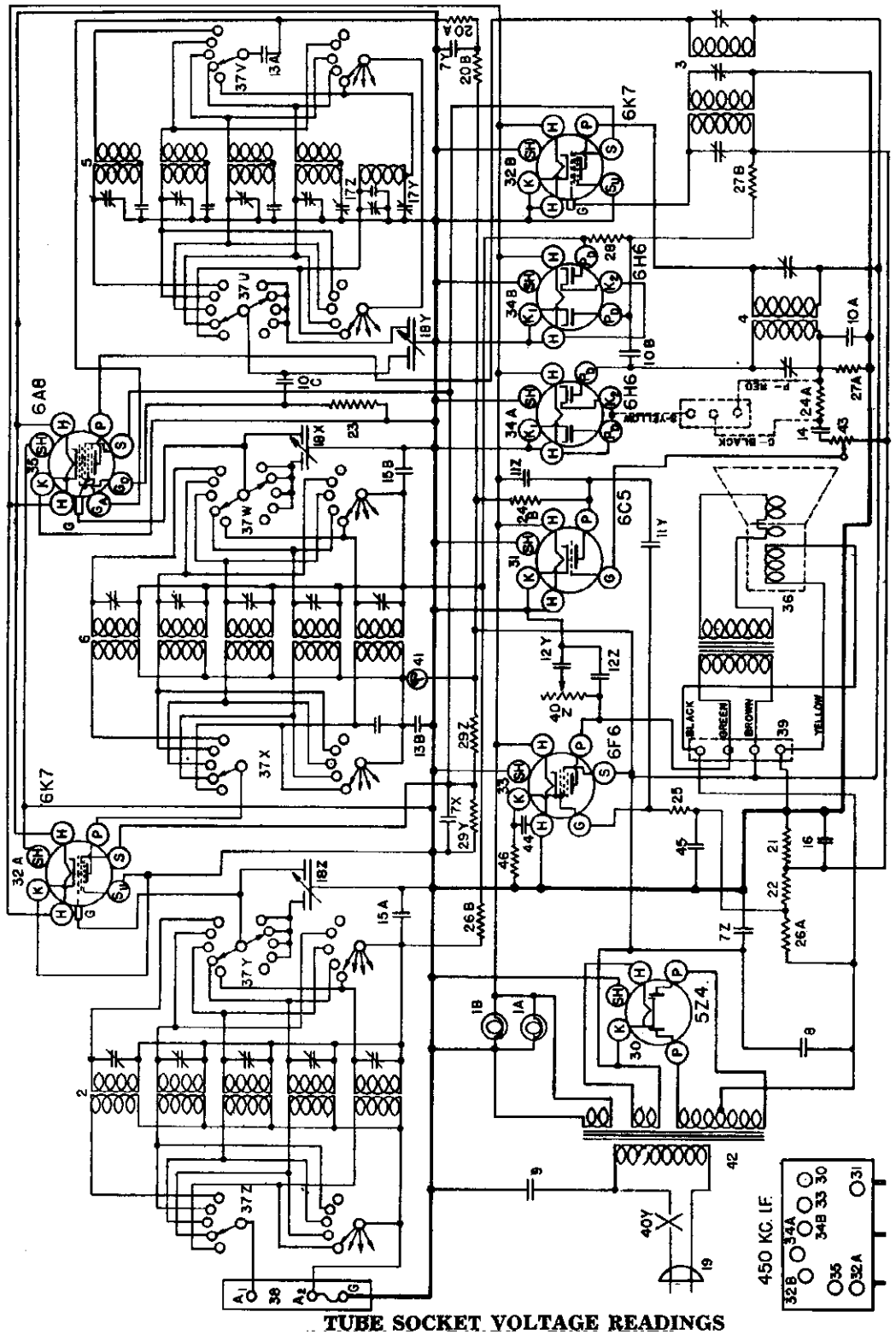

FIG. 1—WIRING DIAGRAM—MODEL 865

TUBE SOCKET VOLTAGE READINGS

Tube	Function	H	P	S	Su	G	K	Go	Ga
6K7	R-F Amplifier	6.3	245	110	0	-3	0		
6A8	Osc.-Mod.	6.3	245	110	—	-3	0	-5 to -15	175
6K7	I-F Amplifier	6.3	245	110	0	-3	0	—	—
6H6	Detector	6.3	—	—	—	—	0	—	—
6H6	AVC	6.3	—	—	—	—	0	—	—
6C5	A-F Amplifier	6.3	35	—	—	-3	0	—	—
6F6	Output	6.3	235	245	—	-16	0	—	—
5Z4	Rectifier	5.0	250	—	—	—	—	—	—

Measured on 117.5 Volt Line—60 Cycles A.C. Power Consumption Approximately 60 Watts.
Power Output Approximately 5 Watts.

© John F. Rider, Publisher

© John F. Rider Publisher

PARTS LIST—MODEL 865

Figures in first column refer to parts in Diagrams.

Item No.	Part No.	Description
1A, 1B	—36504	Dial Light Socket Assm.
2	G72 —32000	Ant. Coil Assm. Complete.
	G48 —32000	Ant. Coil only, 150-400 Kc.
	G70 —32000	Ant. Coil only, 540-1500 Kc.
	G49 —32000	Ant. Coil only, 1500-4000 Kc.
	G71 —32000	Ant. Coil only, 4-10 Mc.
	G52 —32000	Ant. Coil only, 10-22 Mc.
	W —36028	5 Section Trimmer Condenser
	MG19—36168	Coil Support Base
	MG9 —36168	Coil Shield
3	G84 —32004	1st I. F. Transformer Assm.
4	G85 —32004	2nd I. F. Transformer Assm.
5	G46 —32002	Osc. Coil Assm. Complete
	G39 —32002	Osc. Coil only, 150-400 Kc.
	G40 —32002	Osc. Coil only, 540-1500 Kc.
	G41 —32002	Osc. Coil only, 1500-4000 Kc.
	G45 —32002	Osc. Coil only, 4-10 Mc.
	G44 —32002	Osc. Coil only, 10-22 Mc.
	W —36028	5 Section Trimmer Condenser
	MG20—36168	Coil Support Base
	MG10—36168	Shield
	G4 —34007	Condenser, 1136 Mmf.
	G6 —34007	Condenser, 1707 Mmf.
	G5 —34007	Condenser, 2787 Mmf.
	G8 —34002	Condenser, 25 Mmf.
6	G49 —32001	R. F. Coil Assm. Complete
	G27 —32001	R. F. Coil only, 150-400 Kc.
	G47 —32001	R. F. Coil only, 540-1500 Kc.
	G28 —32001	R. F. Coil only, 1500-4000 Kc.
	G48 —32001	R. F. Coil only, 4-10 Mc.
	G30 —32001	R. F. Coil only, 10-22 Mc.
	W —36028	5 Section Trimmer Condenser
	MG19—36168	Coil Support Base
	MG9 —36168	Shield
7Z		Condenser, 8 Mfd., 450 Volts
7Y	W —36056	Condenser, 4 Mfd., 350 V.
7X		Condenser, 4 Mfd., 250 V.
8	W —36055	Condenser, 35 Mfd., 400 V.
9	W —36805	Condenser, 0.01 Mfd., 400 V.
10A		Condenser, 100 Mmf.
10B	G2 —34002	Condenser, 100 Mmf.
10C		Condenser, 100 Mmf.
11Z		Condenser, 0.001 Mfd., 400 V.
11Y	W —25537A	Condenser, 0.03 Mfd., 400 V.
12Y	W —31052	Condenser, 0.004 Mfd.
12 Z		Condenser, 0.05 Mfd.
13A	W —32378	Condenser, 0.01 Mfd., 400 V.
13B	W —32378	Condenser, 0.01 Mfd., 400 V.
14	W —23191A	Condenser, 0.01 Mfd., 400 V.
15A	W —32379	Condenser, 0.02 Mfd., 200 V.
15B	W —32379	Condenser, 0.02 Mfd., 200 V.
16	W —30321A	Condenser, 1.0 Mfd., 160 V.
17Z	G15 —33006	Condenser, B. C. Band Osc. Series
17Y		Condenser, L. F. Band Osc. Series
18Z		
18Y	G34 —33002	3 Section Tuning Cond. Gang
18X		
	—36499	Dial Drive Assm.

Item No.	Part No.	Description
	—36528	Dial Face only.
	—37551	Dial Hand only
	—37552	Second Hand only
	—37484	Dial Hand Screw
	—37543	Dial Hand Washer
19	B —33905A	A. C. Cord & Plug
20A	—21876	Resistor, 10,000 Ohms
20B	—21876	Resistor, 10,000 Ohms
21	—22196	Resistor, 20,000 Ohms
22	—34019	Resistor, 75,000 Ohms
23	—21875	Resistor, 100,000 Ohms
24A	—23403	Resistor, 150,000 Ohms
24B	—23403	Resistor, 150,000 Ohms
25	—21455	Resistor, 300,000 Ohms
26A	—23785	Resistor, 500,000 Ohms
26B	—23785	Resistor, 500,000 Ohms
27A	—21454	Resistor, 1.0 Megohm
27B	—21454	Resistor, 1.0 Megohm
28	—26577	Resistor, 3.0 Megohm
29Z, 29Y	W —36442	Resistor, 17,500 Ohms / 15,000 Ohms
30	G154—36400	Socket, 5Z4
31	G152—36400	Socket, 6C5
32A	G151—36400	Socket, 6K7
32B	G151—36400	Socket, 6K7
33	G153—36400	Socket, 6F8
34A	G155—36400	Socket, 6H6
34B	G155—36400	Socket, 6H6
35	G156—36400	Socket, 6A8
36	339—CL—22	Speaker, (Table Model)
	630—CL—27	Speaker, (Console Model)
37U To 37Z	—36271E	Band Change Switch
38	G16 —26719	Ant. Termina. Board
39	G5 —31128	Speaker Terminal Board
	W —34628	Speaker Terminal Cover
	W —34627	Speaker Term. Cover Insulator
40A, 40B	W —36539A	Tone Control / On & Off Switch
41	W —36500	Tuning Meter Complete
42	G10 —30745	Power Transformer, 60 Cy., 110 V.
	G11 —30745	Power Transformer, 25 Cy., 110 V.
	G12 —30745	Power Transformer, 25 Cy., 220 V.
43	—36066	Volume Control
44	W —36931	Condenser, 17 Mfd., 25 Volt
45	W —29910A	Condenser, 0.25 Mfd., 200 Volt
46	W —25291	Resistor, 500 Ohm (Flex)
	B —36515	Escutcheon & Lens Assm.
	D —28	Escutcheon Screws (3)
	W —36313	Tone Control Plate
	W —36311	Band Change Plate
	W —36316	Band Chge. Ind., (Celluloid)
	W —28760B	Escutcheon Pins
	W —36519	Knob, Tuning
	W —36520	Knob, Vernier
	W —36521	Knob, Vol. Control
	W —36518	Knob, Band Chge. & Tone Con.

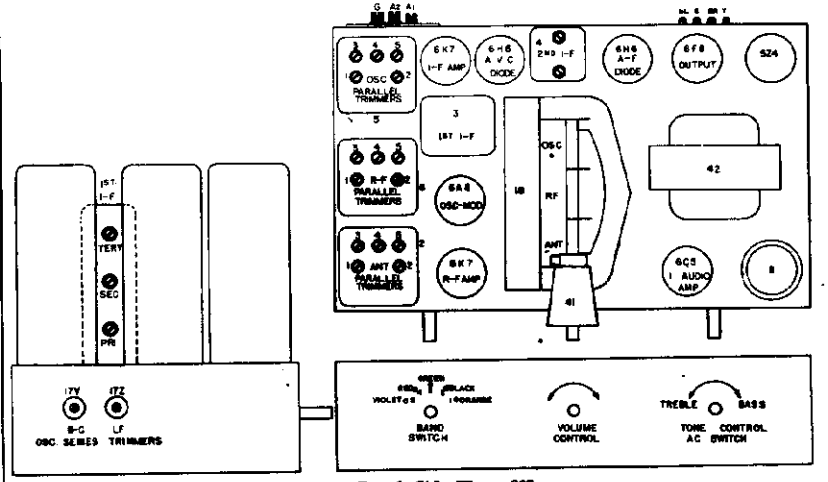

Fig. 2. Top & Side Views 865

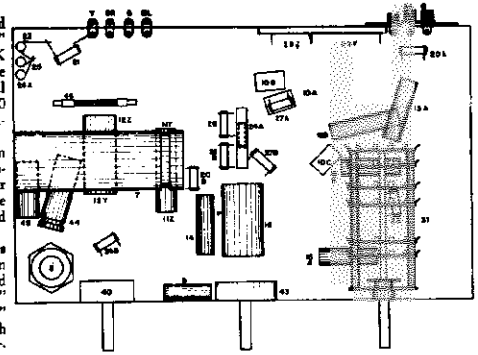

Fig. 3. Bottom View 865

CONNECTING OUTPUT METER

Connect one terminal of the output meter to the plate and the other terminal to the screen of the 6F6 output tube. Be sure the meter is protected from D.C. by connecting a condenser (.1 mfd. or larger—not electrolytic) in series with one of the leads.

1. Tuning I-F Amplifier to 450 Kilocycles.

(a) Connect the output of the signal generator through a .02 mfd. condenser to the top cap of the 6A8 tube, leaving the tube's grid clip in place. Connect the ground lead from the signal generator to the receiver chassis. KEEP THE GENERATOR OUTPUT LEAD AS FAR AS POSSIBLE FROM THE GRID LEADS OF THE OTHER SCREEN GRID TUBES.

(b) Set the station selector so that the tuning condenser plates are open. Turn the volume control knob to the right (ON) and turn the tone control knob to the left (TREBLE).

(c) Turn the band selector switch all the way to the left.

(d) Set the signal generator to 450 kilocycles.

(e) Close the middle trimmer condenser (SEC) on the 1st I-F transformer. (Fig. 2).

(f) Adjust the trimmers located on top of the 2nd I-F transformer for maximum output.

(g) Adjust the top and bottom trimmers (TERT and PRI) of the 1st I-F transformer for maximum output.

(h) Repeat operations (f) and (g) for more accurate adjustments.

ALWAYS USE THE LOWEST SIGNAL GENERATOR OUTPUT THAT WILL GIVE A REASONABLE OUTPUT METER READING.

(i) Reduce the output of the signal generator and adjust the middle trimmer on the 1st I-F transformer for maximum output. DO NOT READJUST THE OTHER TRIMMERS.

2. Aligning R-F Amplifier.

(a) When aligning the R-F amplifier the output lead from the signal generator is connected to the "Ant" terminal of the receiver. For the ORANGE, BLACK and GREEN bands a .00025 mfd. condenser must be connected in series with the output lead from the signal generator and for the two high frequency bands a 400 ohm carbon resistor should be used in place of the condenser.

Each band should first be shunt aligned and then series aligned where provision is made for series alignment (Orange and Black Bands). The band selector switch should be set for the band being aligned and the signal generator should be set to the frequency indicated for each adjustment.

Adjust the "Osc", "R-F" and "Ant" parallel trimmers in the order given for maximum output. Tune the station selector to the generator signal for maximum output and then check the adjustments of the "R-F" and "Ant" trimmers in the order given. Do not readjust the "Osc" trimmer. NOTE: When aligning the Police and High Frequency Bands care must be exercised so that the circuits will be aligned on the fundamental frequency rather than on the image frequency which is always approximately 900 kilocycles less than the fundamental. To check on this, increase the output of the signal generator approximately ten times and try to tune-in the signal both at the generator frequency as indicated on the station selector dial and at approximately 900 kilocycles below the correct frequency. If the circuits have been properly aligned the signal can be tuned-in at both positions but much stronger at the correct position.

To align the "series" trimmer (17Y and 17Z, Fig. 2) set the signal generator to the frequency indicated and then tune-in this signal with the station selector for maximum output. Adjust the "series" trimmer while rocking the tuning condenser back and forth slightly, until no further improvement in output can be obtained.

(b) Signal Input Frequencies

	Shunt Alignment	Series Alignment
Weather Band (ORANGE)	400 Kc.	150 Kc.
American Broadcast Band (BLACK)	1400 Kc.	600 Kc.
Police and Amateur Band (GREEN)	4000 Kc.	—
Night H-F Band (RED)	10 Megacycles	—
Day H-F Band (VIOLET)	21 Megacycles	—

MDL 915, Clipper
Schematic, Voltage

CROSLEY RADIO CORP.

SPECIFICATIONS

The Crosley Model 915 radio is a nine-tube superheterodyne receiver and is available either with a standard 110 volt—60 cycle power transformer or with a universal power transformer which can be adapted to A-C lines from 95 to 267 volts and any frequency.

It is a five band receiver and the dial is divided into five sections as follows:

ORANGE—	150- 400	kilocycles	(Weather Band)
BLACK —	540- 1,500	kilocycles	(American Broadcast Band)
GREEN —	1,500- 4,000	kilocycles	(Police and Amateur Band)
RED —	4,000-10,000	kilocycles	(Night High Frequency Band)
VIOLET —	10,000-21,000	kilocycles	(Day High Frequency Band)

The positions on the band selector switch are in the above order, reading from left to right.

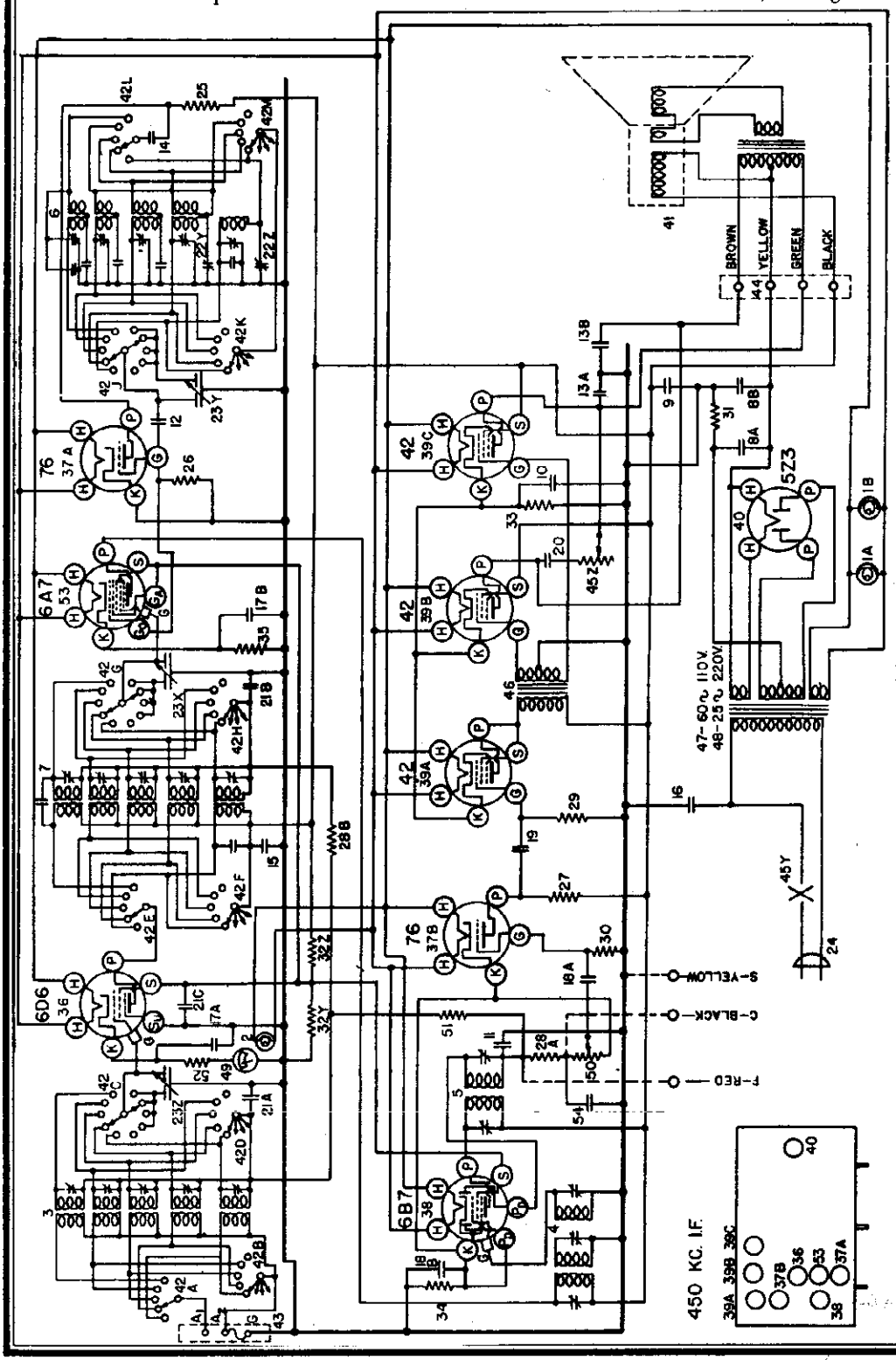

TUBE SOCKET VOLTAGE READINGS

Tube	Function	H	P	S	Su	G	K	Go	Ga
6D6	R-F Amplifier	6.2	238	102	7	0	7	—	—
6A7	Modulator	6.2	238	102	—	0	6	-1 to -30	102
76	Oscillator	6.2	74	—	—	-24	0	—	—
6B7	I-F Amp. & Det.	6.2	238	102	—	0	3	—	—
76	1st. A-F Amp.	6.2	46	—	—	0	3	—	—
42	2nd. A-F Amp.	6.2	208	208	—	0	18	—	—
42	Output	6.2	335	238	—	0	18	—	—
42	Output	6.2	335	238	—	0	18	—	—
5Z3	Rectifier	4.9	345	—	—	—	—	—	—

Measured on 117.5 Volt—60 Cycle Line. Power Consumption Approximately 122 Watts.

NOVEMBER, 1935

©John F. Rider, Publisher

MODEL 915, Clipper
Socket, Trimmers
Chassis, Phono.

CROSLEY RADIO CORP.

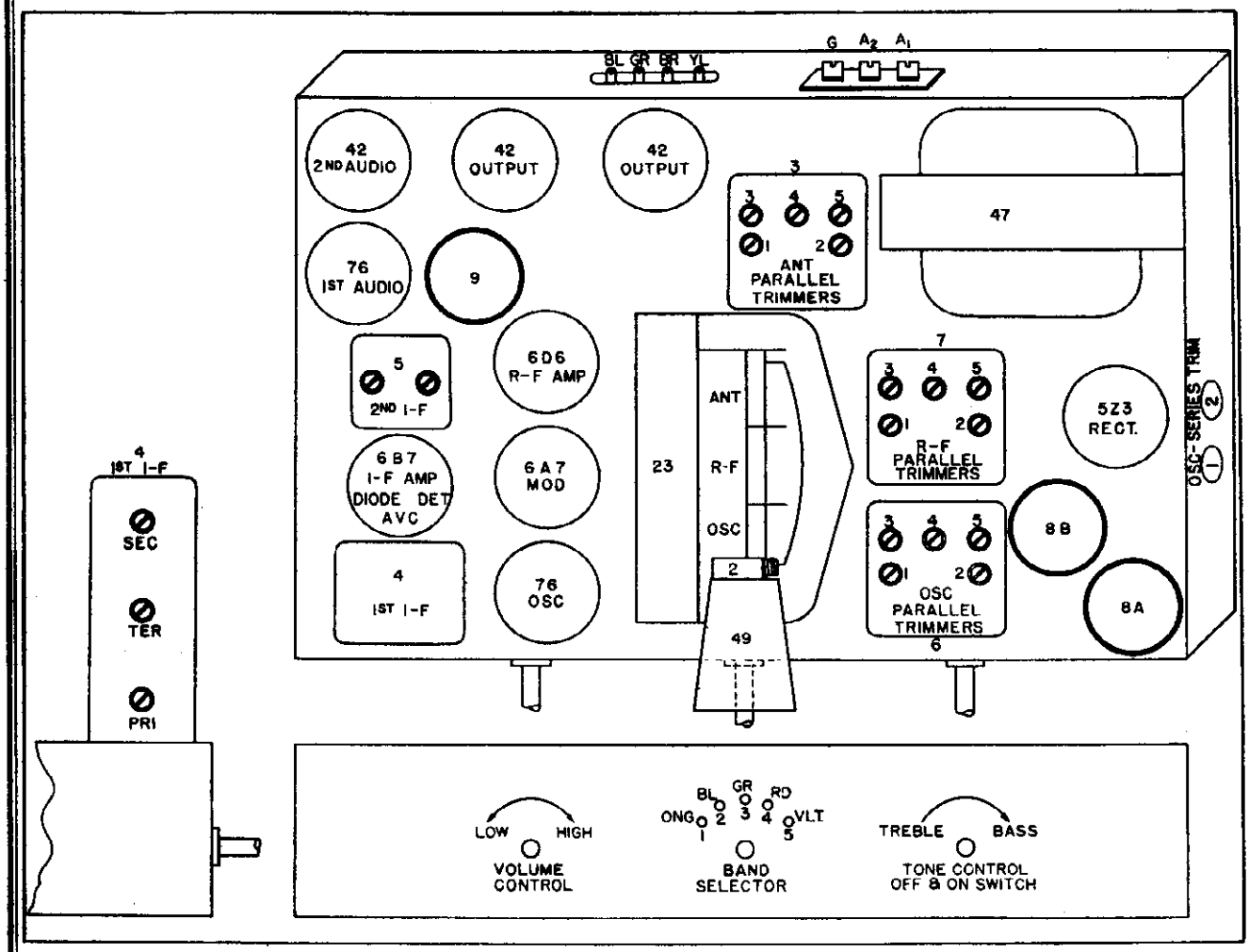

Fig. 2. Top View

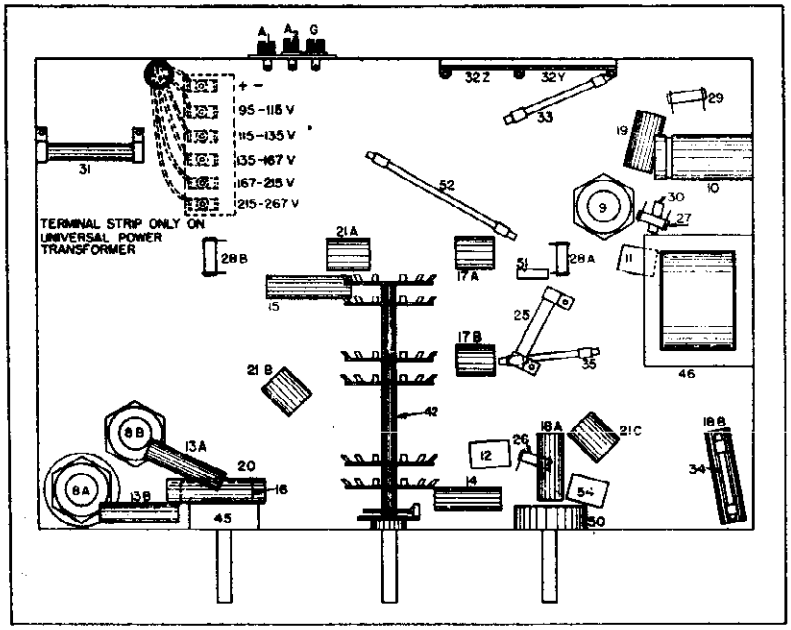

Fig. 3. Bottom View

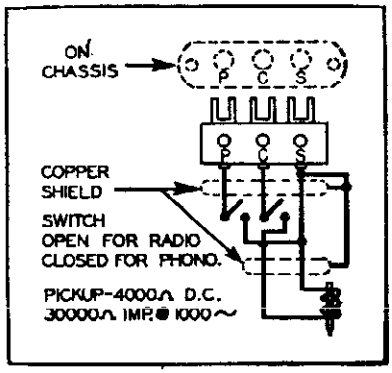

Fig. 4. Phono Connections

©John F. Rider, Publisher

©John F. Rider, Publisher

UNIVERSAL POWER TRANSFORMER

The Model 915 chassis for use on other than 110 volts, 60 cycles, is supplied with a universal power transformer designed to operate on 25 cycles and up. When leaving the factory it is wired for the voltage indicated on the license plate. It is possible, however, by a slight change in the power transformer wiring to adapt the set to a different voltage anywhere from 95 to 267 volts. To adapt the set to a different line voltage it is necessary to remove the chassis from the cabinet, remove the bottom from the chassis and locate the terminal strip on the bottom of the power transformer, Fig. 3. After careful measurement of the maximum values of line voltage, unsolder the wire of the A.C line cord from the terminal strip and solder it to the correct terminal. The correct terminal will be the one marked so as to cover or nearly cover the maximum line voltage. THE MAXIMUM VOLTAGE SHOULD NOT EXCEED THE HIGHEST RATING STAMPED ON THE TERMINAL BOARD BESIDE THE TERMINAL TO BE USED BY MORE THAN 3%.

PHONOGRAPH PICKUP

Chassees equipped with a universal power transformer also have three terminals on the back for connecting a phonograph pickup. These terminals are marked P C S and the pickup is connected through a double pole —single throw switch to these terminals as shown in Fig. 4.

ALIGNMENT PROCEDURE

All the circuits in this receiver are very accurately adjusted at the factory and should need no further adjustments. However, if it is definitely known that an adjustment is necessary the circuits can be properly aligned only with the use of a modulated signal generator and an output meter.

CONNECTING OUTPUT METER

Connect one terminal of the output meter to the plate of one of the type 42 output tubes and connect the other terminal to the plate of the other 42 output tube. Be sure the meter is protected from D.C. by connecting a condenser (.1 mfd. or larger—not electrolytic) in series with one of the leads.

1. Tuning I-F Amplifier to 450 Kilocycles.

(a) Connect the output of the signal generator through a .02 mfd. condenser to the top cap of the 6A7 tube, leaving the tube's grid clip in place. Connect the ground lead from the signal generator to the receiver chassis. KEEP THE GENERATOR OUTPUT LEAD AS FAR AS POSSIBLE FROM THE OTHER SCREEN GRID TUBES.

(b) Set the station selector so that the tuning condenser plates are open. Turn the volume control knob to the right (ON) and turn the tone control knob to the left (TREBLE).

(c) Turn the band selector switch all the way to the right.

(d) Set the signal generator to 450 kilocycles.

(e) Close the middle trimmer condenser on the 1st. I-F transformer.

(f) Adjust the trimmers located on top of the 2nd. I-F transformer for maximum output.

(g) Adjust the top and bottom trimmers of the 1st. I-F transformer for maximum output.

(h) Repeat operations (f) and (g) for more accurate adjustments.

ALWAYS USE THE LOWEST SIGNAL GENERATOR OUTPUT THAT WILL GIVE A REASONABLE OUTPUT METER READING.

(i) Reduce the output of the signal generator and adjust the middle trimmer on the 1st. I-F transformer for maximum output. DO NOT READJUST THE OTHER TRIMMERS.

2. Aligning R-F Amplifier.

(a) When aligning the R-F amplifier the output lead from the signal generator is connected to the "Ant" terminal of the receiver. For the ORANGE, BLACK and GREEN bands a .00025 mfd. condenser must be connected in series with the output lead from the signal generator and for the two high frequency bands a 400 ohm resistor should be used in place of the condenser.

Each band should first be shunt aligned and then series aligned where precision is made for series alignment (Weather band and Broadcast band). The band selector switch should be set for the band being aligned and the signal generator should be set to the frequency indicated for each adjustment.

Adjust the "Osc", "R-F" and "Ant" trimmers in the order given for maximum output and then check the adjustments in the same order. NOTE: When aligning the Police and High Frequency Bands care must be exercised so that the circuits will be aligned on the fundamental frequency rather than on the image frequency which is always approximately 900 kilocycles less than the fundamental. To check on this, increase the output of the signal generator approximately 10 times and try to tune-in the signal both at the generator frequency as indicated on the station selector dial and at approximately 900 kilocycles below the correct frequency. If the circuits have been properly aligned the signal can be tuned-in at both positions but much stronger at the correct frequency.

To align the "series" trimmer, set the signal generator to the frequency indicated and then tune-in this signal with the station selector for maximum output. Adjust the "series" trimmer while rocking the tuning condenser back and forth slightly, until no improvement in output can be obtained.

After the "series" alignment of any band has been completed it will be necessary to repeat the "shunt" alignment of that band.

(b) Signal Input Frequencies.

	Shunt Alignment	Series Alignment
Weather Band (ORANGE)	400 Kc.	180 Kc.
American Broadcast Band (BLACK)	1400 Kc.	600 Kc.
Police & Amateur Band (GREEN)	4000 Kc.	—
Night H-F Band (RED)	10 Megacycles	—
Day H-F Band (VIOLET)	21 Megacycles	—

SOCKET VOLTAGES

The tube socket voltages are measured from the tube socket contacts to the chassis, with a 1000 ohm per volt, 500 volt voltmeter (except filaments) with the receiver in operating condition and no signal input. Readings may vary plus or minus 10% of values given.

PARTS LIST—MODEL 915

Figures in first column refer to parts shown in diagrams.

Item No.	Part No.	Description
1A	—36504	Dial Light Socket Assm.
1B	—36504	Dial Light Socket Assm.
2	—36557	Tuning Meter Bulb
3	G63—32000	Ant. Coil Assm. Complete
	G64—32000	Ant. Coil only, 150-400 Kc.
	G65—32000	Ant. Coil only, 540-1500 Kc.
	G65—32000	Ant. Coil only, 1500-4000 Kc.
	G67—32000	Ant. Coil only, 4-10 Mc.
	G66—32000	Ant. Coil only, 10-22 Mc.
	MG26—36542	Coil Support Base
	W —36028	5 Section Trimmer Cond. Assm.
	MG9 —36168	Shield
4	G57—32004	1st I. F. Trans. Assm.
5	G58—32004	2nd I. F. Trans. Assm.
6	G54—32002	Osc. Coil Assm. Complete
	G55—32002	Osc. Coil only, 150-400 Kc.
	G56—32002	Osc. Coil only, 540-1500 Kc.
	G57—32002	Osc. Coil only, 1500-4000 Kc.
	G59—32002	Osc. Coil only, 4-10 Mc.
	G58—32002	Osc. Coil only, 10-22 Mc.
	MG26—36542	Coil Support Base
	W —36028	5 Section Trimmer Cond. Assm.
	G7 —34007	Condenser, 1750 mmf.
	G8 —34007	Condenser, 4350 mmf. (2)
	G6 —34002	Condenser, 25 mmf. (2)
	MG9 —36168	Shield.
7	G39—32001	R. F. Coil Assm. Complete
	G40—32001	R. F. Coil only, 150-400 Kc.
	G44—32001	R. F. Coil only, 540-1500 Kc.
	G41—32001	R. F. Coil only, 1500-4000 Kc.
	G43—32001	R. F. Coil only, 4-10 Mc.
	G42—32001	R. F. Coil only, 10-22 Mc.
	MG27—36542	Coil Support Base
	W —36028	5 Section Trimmer Cond. Assm.
	MG9 —36168	Shield
	G6 —34002	Condenser 25 mmf.
	G11 —34002	Condenser, 250 mmf.
8A	W —36055	Condenser, 25 mfd. 400 Volts
8B	W —36055	Condenser, 25 mfd. 400 Volts
9	W —36057	Condenser, 40 mfd. 300 Volts
10	W —36548	Condenser, 25 mfd. 25 Volts
11	G2 —34002	Condenser, 0.0001 mfd. 200 Volts
12	G1 —34002	Condenser, 0.00025 mfd. 200 Volts
13A	W —35758	Condenser, 0.008 mfd. 400 Volts
13B	W —35758	Condenser, 0.008 mfd. 400 Volts
14	W —34647	Condenser, 0.008 mfd. 400 Volts
15	W —32378	Condenser, 0.01 mfd. 400 Volts
16	W —30805	Condenser, 0.01 mfd. 400 Volts
17A	W —36541	Condenser, 0.02 mfd. 160 Volts
17B	W —36541	Condenser, 0.02 mfd. 160 Volts
18A	W —28621	Condenser, 0.02 mfd. 200 Volts
18B	W —28621	Condenser, 0.02 mfd. 200 Volts
19	W —32708	Condenser, 0.05 mfd. 400 Volts
20	W —23615	Condenser, 0.05 mfd. 400 Volts
21A	W —35936	Condenser, 0.05 mfd. 200 Volts
21B	W —35936	Condenser, 0.05 mfd. 200 Volts
21C	W —35936	Condenser, 0.05 mfd. 200 Volts
22Z, 22Y	G27—33008	Series Trimmer Condenser

Item No.	Part No.	Description
23Z, 23X, 23Y	G37—33002	Var. Tuning Condenser Gang
	—37376B	Dial Drive Assm.
	C —36658	Dial Face only
	—37551	Dial Hand
	—37554	Second Hand
	—37484	Dial Hand Screw
	—37543	Dial Hand Washer
24	B —33906A	A.C. Cord & Plug
25	W —36545	Resistor, 30,000 Ohm, 1 Watt
26	—22196	Resistor, 20,000 Ohm, ¼ Watt
27	—23403	Resistor, 150,000 Ohm, ¼ Watt
28A	—21465	Resistor, 300,000 Ohm, ¼ Watt
28B	—21456	Resistor, 300,000 Ohm, ¼ Watt
29	—23785	Resistor, 500,000 Ohm, ¼ Watt
30	—35927	Resistor, 2 Megohm, ¼ Watt
31	W —36549	Resistor, 200 Ohm, 6 Watts
32 Z, 32Y	W —32301	Resistor, 10,000 Ohms / Resistor, 15,000 Ohms
33	W —22873	Resistor, 220 Ohm (Flex) 2½ W
34	W —25937	Resistor, 275 Ohm (Flex) ½ W
35	W —22514	Resistor, 750 Ohm (Flex) ½ W
36	G75—28807	Socket, 6D8, 6 Prong
37A, 37B	G80—28807	Socket, 76, 5 Prong / Socket, 76, 5 Prong
38	G48—28807	Socket, 6B7, 7 Prong
39A, 39B, 39C	G25—28807	Socket, 42, 6 Prong / Socket, 42, 6 Prong / Socket, 42, 6 Prong
40	G53—28807	Socket, 5Z3, 4 Prong
	W —35772	Tube Shielf Half
	W —35773	Tube Shield Cap
	W —36280	Tube Shield Cap (Osc.)
	W —35774	Tube Shield Base
41	427CL—22	Speaker, (Table Model)
	627CL—27	Speaker, (Console Model)
	—36547	Band Change Switch
42	G27—26719	Ant. & Grnd. Terminal
43	G5 —31128	Speaker Terminal
44	—32063	Tone Control / Off & On Switch
45Z, 45Y	G22—24628	A. F. Driver Transformer
46	G42—25669	Power Trans. 110 V., 60 Cy.
47	B —37685	Universal Power Transformer
48	W —36500	Tuning Meter
49	W —36501	Tuning Meter Bracket
50	—32062	Volume Control
51	—36588	Resistor, 3 meg. ¼ Watt
52	W — 21964	Resistor, 165 Ohm (Flex) ½ W
53	G47—28807	Socket, 6A7, 7 Prong
54	G6 —34002	Condenser, 25 mmf.
	B —36515	Escutcheon
	W —36311	Band Change Escutcheon
	W —36564	Band Change Escutcheon Indicator (Celluloid)
	W —36519	Knob, Tuning
	W —36520A	Knob, Vernier
	W —36518	Knob, (Tail) Band Change
	W —36521	Knob (2)
	G25—35954	Terminal Junction for Uni. P. T.

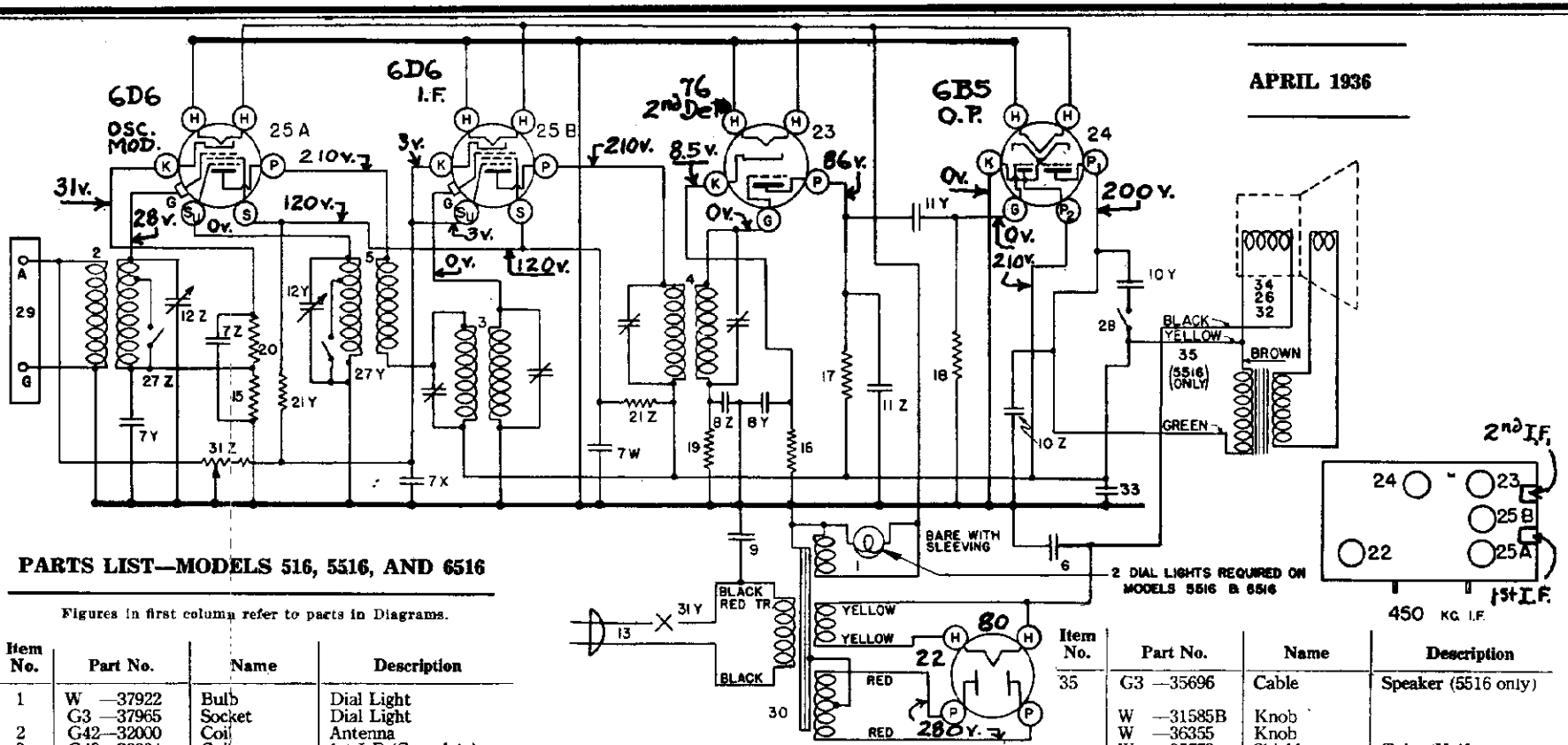

PARTS LIST—MODELS 516, 5516, AND 6516

Figures in first column refer to parts in Diagrams.

Item No.	Part No.	Name	Description
1	W —37922	Bulb	Dial Light
	G3 —37965	Socket	Dial Light
2	G42—32000	Coil	Antenna
3	G48—32004	Coil	1st I-F (Complete)
4	G49—32004	Coil	2nd I-F (Complete)
5	G47—32002	Coil	Osc.
6	W —41080	Condenser	12 Mfd. 300V.
7 Z			.02 Mfd. 200V.
7 Y			.02 Mfd. 200V.
7 X	W —28623	Condenser	.02 Mfd. 200V.
7W			.02 Mfd. 200V.
8 Z			.1 Mfd. 200V.
8 Y	W —28622	Condenser	.1 Mfd. 200V.
9	W —30805	Condenser	.01 Mfd. 400V.
10 Z	W —35011	Condenser	.006 Mfd. 400V.
10 Y			.03 Mfd. 400V.
11 Z	W —25537A	Condenser	.001 Mfd. 400V.
11 Y			.03 Mfd. 400V.
12 Z	G14—33001	Condenser	2 section Var. Tuning.
12 Y			
13	B —33906A	Cord & Plug	Power Supply
15	—31094	Resistor	4500 Ohm.
16	—21237A	Resistor	60000 Ohm. ¼ W.
17	—21455	Resistor	300,000 Ohm.
18	—23785	Resistor	500,000 Ohm.
19	—21454	Resistor	1 Megohm
20	W —25937	Resistor	275 Ohm Flex
21 Z	W —35963	Resistor	8500 Ohm / 25000 Ohm Candohm
21 Y			
22	G6 —28807	Socket	Type 80
23	G80—28807	Socket	Type 76
24	G90—28807	Socket	Type 6B5
25A	G75—28807	Socket	Type 6D6
25B	G75—28807	Socket	Type 6D6
26	219BL9	Speaker	Used on 6516 Only
27 Z	W —35753A	Switch	Band Selector
27 Y			
28	W —36184A	Switch	Tone Control
29	G1 —26719	Terminal Board	Ant. & Grd.
30	G5 —28500	Transformer	Power—110V. 60 Cy.
	G6 —28500	Transformer	Power—110V. 25 Cy.
	G7 —28500	Transformer	Power—220V 25 Cy.
31 Z	—37343		Volume Control
31 Y			On-Off Switch
32	219BJ3	Speaker	Used on 5516 Only
33	W —41081	Condenser	16 Mfd. 250V.
34	241BL9	Speaker	Used on 516 only

Item No.	Part No.	Name	Description	
35	G3 —35696	Cable	Speaker (5516 only)	
	W —31585B	Knob		
	W —36355	Knob		
	W —35772	Shield	Tube (Half)	
	W —35773	Cap	Tube Shield	
	W —35774	Base	Tube Shield	
	C —40822	Dial	Calibrated Glass	
	W —40815	Bracket	DialGlassMtg.RH	
	W —40816	Bracket	DialGlassMtg.LH	
	W —40804	Cushion	Dial Glass	516
	W —40806	Drive Unit	Dial	Only
	MG16—40819	Bracket	Drive Mtg. Assy.	
	B —40590	Escutcheon	Dial	
	D — 28	Screw	Escutcheon Mtg.	
	C —41059	Dial	Calibrated Glass	
	W —40797	Bracket	Dial Glass Mtg.	
	W —40798	Bracket	Dial Support L. H.	
	W —40799	Bracket	Dial Support R. H.	5516
	W —40793	Drive Unit	Dial	6516
	MG16—40765	Bracket	Drive Mtg. Assy.	Only
	MG33—40765	Drive Bearing	Assy.	
	B —40839	Escutcheon	Ring	
	W —28760	Escutcheon	Pin	
	B —40818B	Pointer	Disc.	
	W —40486	Pointer	Disc. Screw	
	B —40802	Bracket	Speaker Mtg.	6516
	W —41001A	Clamp	Speaker	Only

CROSLEY RADIO CORP.

MODEL 916
Schematic
Parts

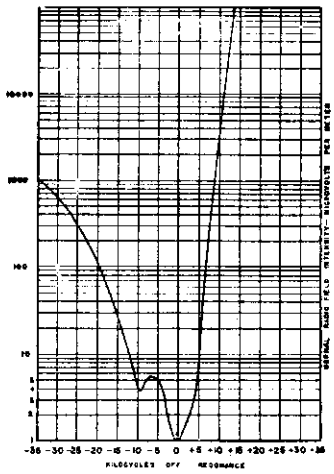

Fig. 5

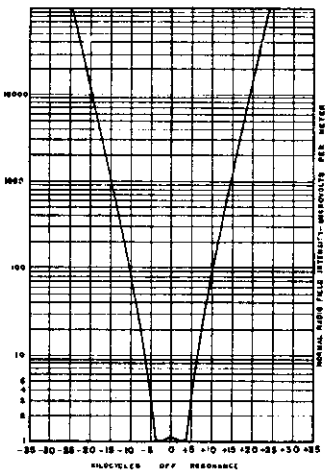

Fig. 6

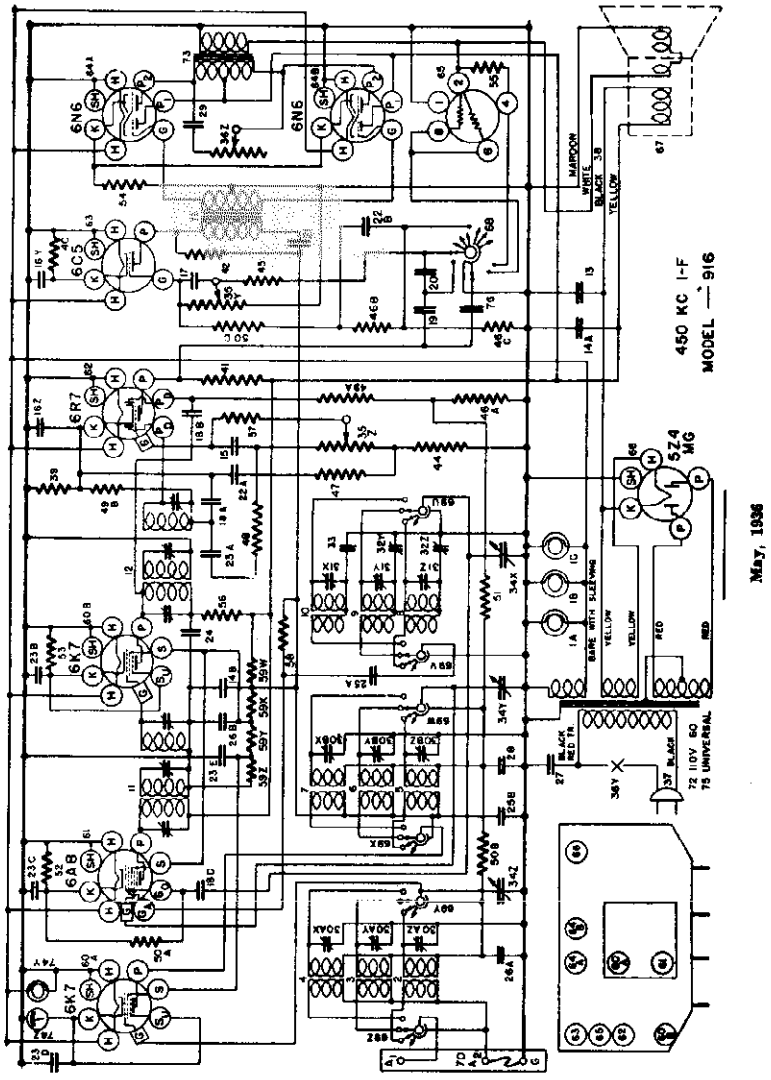

PARTS LIST—MODEL 916

Figures in first column refer to parts in Diagrams.

Item No.	Part No.	Description
1ABC	W —37922	Dial Light
	G3 —37965	Dial Light Socket
2	G94 —32000	Ant. Coil, B. C. B.
3	G95 —32000	Ant. Coil, Pol. B.
4	G113 32000	Ant. Coil, H. F. B.
5	G68 —32001	R. F. Coil, B. C. B.
6	G80 —32001	R. F. Coil, Pol. B.
7	G79 —32001	R. F. Coil, H. F. B.
8	G101—32002	Osc. Coil, B. C. B.
9	G102—32002	Osc. Coil, Pol. B.
10	G103—32002	Osc. Coil, H. F. B.
11	G90 —32004	1st I. F. Assembly
12	G91 —32004	2nd I. F. Assembly
13	W —36055	Condenser, 35 Mfd. 400 V. Electrolytic
14A	W —36057	Condenser, 40 Mfd. 300 V. Electrolytic
14B	W —36057	Condenser, 40 Mfd. 300 V. Electrolytic
15	G8 —34002	Condenser, .00001 Mfd. (Molded)
16Z	W —37778	Condenser, 12 Mfd. 25 V. (Electrolytic
16Y	W 37778	Condenser, 12 Mfd. 25 V.
17	G6 34002	Condenser, .000025 Mfd. (Molded)
18A	G2 —34002	Condenser, .0001 Mfd. (Molded)
18B	G2 —34002	Condenser, .0001 Mfd. (Molded)
18C	G2 —34002	Condenser, .0001 Mfd. (Molded)
19	W —32780.3	Condenser, .05 Mfd. 400 V.
20	G3 —34002	Condenser, .0005 Mfd. (Molded)
21	W —37732	Condenser, 3 Mfd. 160 V.
22A	W —31219	Condenser, .023 Mfd. 200 V.
22B	W —31219	Condenser, .023 Mfd. 200 V.
23A to 23E	W —36541	Condenser, .02 Mfd. 160 V.
24	W —30488	Condenser, .02 Mfd. 400 V.
25A	W —32378	Condenser, .01 Mfd. 400 V.
25B	W 32378	Condenser, .01 Mfd. 400 V.
26A	W —35936	Condenser, .06 Mfd. 200 V.
26B	W —35936	Condenser, .05 Mfd. 200 V.
27	W —30805	Condenser, .01 Mfd. 400 V.
28	W —32380	Condenser, .05 Mfd. 200 V.
29	W —23615	Condenser, .05 Mfd. 400 V.
30	W —37891	3 Section Shunt Trimmer Assembly
31	W —35951	3 Section Shunt Trimmer Assembly
32Z	W —37874	B. C. Osc. Series Trimmer Cond.
32Y		Pol. Osc. Series Trimmer Cond.
33	G18 —34000	H. F. Fixed Series Condenser
34	G47 —33002	3 Section Var. Tuning Condenser
	—41153	Dial Drive Unit
	C —41148	Dial Glass
	—41136	Mask for Dial
	W 40804	Dial Cushion
	W —40485	Dial Hand Screw
	—40485	Long Dial Hand
	—41145	Short Dial Hand
	—40537	Coupling Unit
	—41157	Belt (Drive)
	—40638	Indicator Cable
35Z	—41417	Volume Control 1st A. F. .5 Megohm
35Y		Volume Control 2nd A. F. 1 Megohm
36Z	—37966	Tone Control
36Y		A. C. Switch
37	B —33906A	Power Cord & Plug
38	G3 —37918	Speaker Cable
39	—31093	Resistor, 2,700 Ohm ½ W.
40	W —21452	Resistor, 1,100 Ohm ½ W. Flex.
41	—37768	Resistor, 65,000 Ohm ½ W.
42	— 5370A	Resistor, 20,000 Ohm 1 W.
43		
44	—21454	Resistor, 1 Megohm ¼ W.
45	—21455	Resistor, 300,000 Ohm ¼ W.
46A	—23785	Resistor, 500,000 Ohm ¼ W.
46B	—23785	Resistor, 500,000 Ohm ¼ W.
46C	—23785	Resistor, 500,000 Ohm ¼ W.
47	—21453	Resistor, 40,000 Ohm ¼ W.
48	—23403	Resistor, 150,000 Ohm ¼ W.
49A	—33344	Resistor, 400,000 Ohm ½ W.
49B	—33344	Resistor, 400,000 Ohm ½ W.
50A	—35600	Resistor, 100,000 Ohm ¼ W.
50B	—35600	Resistor, 100,000 Ohm ¼ W.
50C	—35600	Resistor, 100,000 Ohm ¼ W.
51	—37245	Resistor, 1.5 Megohm ¼ W.
52	W —28589	Resistor, 350 Ohm ½ W. Flex.
53	W —28105	Resistor, 500 Ohm ½ W. Flex.
54	W 23012A	Resistor, 40 Ohm ¾ W. Flex.
55	W —41193	Resistor, 1 Ohm 2½ W. Flex.
56	W —23013	Resistor, 2,000 Ohm 1¼ W. Flex.
57	—21273A	Resistor, 60,000 Ohm ½ W.
58	W —37987	Resistor, 15,000 Ohm 1 W. Wire Wound
59	W —41225	4 Section Candohm
60A	G151—36400	Socket Type 6K7
60B	G151—36400	Socket Type 6K7
61	G156—36400	Socket Type 6A8
62	G164—36400	Socket Type 6R7
63	G152—36400	Socket Type 6C5
64A	G165—36400	Socket Type 6N6
64B	G165—36400	Socket Type 6N6
65	G167—36400	Socket For W41187 (5 prong tube)
66	G154—36400	Socket Type 5Z4
67	40193	Speaker 633CJ4
68	W —41446	Switch, Multivox Control
69	C —37958E	Switch, Band Selector
70	G27 —26719	Ant. & Grd. Terminal Board Assy.
71	G1 —37995	Audio Input Transformer
72	G43 —25669	PowerSupply Transformer(110V.60Cy)
73	G48 —24628	Audio Output Transformer
74Z	W —41259	Tuning Meter
74Y		Bulb for Meter
75	—37685A	Universal Power Transformer
76	W —41445	Condenser .036 Mfd. 400 V.
	MG54—41214	Complete Dial Assembly
	C —37894	Escutcheon
	B —37896A	Escutcheon Retaining Spring
	B —37896	Dial Lens
	B 37857	Lens Retaining Spring
	W —40365	Escutcheon Felt
	W —37339	Knob (3 required)
	W —40192B	Knob (2 required)

©John F. Rider, Publisher

MODEL 916
Socket, Trimmers
Chassis, Voltage
Aligmment

CROSLEY RADIO CORP.

SPECIFICATIONS

The Crosley Model 916 radio is a nine-tube superheterodyne receiver and is available either with a standard 110 volt—60 cycle power transformer or with a universal power transformer.

The tubes used are 6K7 R-F Amplifier, 6A8 Oscillator-Modulator, 6K7 I-F Amplifier, 6R7 Detector and 1st Audio Amplifier, 6C5 2nd Audio Amplifier, two 6N6 Output, 5Z4 Rectifier and the newly developed Phantom Conductor or Volume Expander tube.

The tuning range of the receiver is from 540 to 19000 Kilocycles and is divided into three bands as follows:

BLUE	540-1900 Kc.	or	555 -158 Meters	(American Broadcast Band)
RED	1.9 -6.5 Megacycles	or	158 - 46 Meters	(Police & Amateurs)
GREEN	6.0 -19 Megacycles	or	50 - 16 Meters	(High Frequency Band)

PHANTOM CONDUCTOR (Auto Expressionator)

The Phantom Conductor tube, Illustration No. 65, is connected across the voice coil of the speaker. When it is operating its resistance varies so as to increase the volume of loud tones, thus giving a wider volume range to reproduced music which tends to compensate for the electrical limitations of broadcasting equipment.

SOCKET VOLTAGES

The tube socket voltages are measured from the tube socket contacts to the chassis with a 1000 ohm per volt, 500 volt D-C voltmeter (except filaments) with the receiver in operating condition and no signal input. The filament voltages should be measured with an accurate low range A-C voltmeter. Readings may vary plus or minus 10% of values given.

TUBE SOCKET VOLTAGE READINGS

Tube	Function	H	P	P_2	S	Su	G	K	Gs
6K7	R-F Amplifier	6.3	221	—	98	4	0	4	—
6A8	Osc-Mod	6.3	221	—	180	—	0	4.5	138
6K7	I-F Amplifier	6.3	280	—	138	5	0	5	—
6R7	Detector & 1st A-F Amplifier	6.3	130	—	—	—	0	6.5	—
6C5	2nd A-F Amplifier	6.3	150	—	—	—	0	6.5	—
6N6	(2) Output	6.3	285	278	—	—	0	3.2	—
5Z4	Rectifier	4.5	357	—	—	—	...	—	...
Phantom Conductor Tube (W41117)			Varies with power output.						

Voltage drop across speaker field 73 volts.
Power Output approximately 9 Watts.
Power Consumptoin approximately 117 Watts.
All readings taken on 117.5 volt power supply.

UNIVERSAL POWER TRANSFORMER

The Model 916 chassis for use on other than 110 volts—60 cycles, is supplied with a universal power transformer designed to operate on a power supply of from 95 to 267 volts and any commercial frequency of 25 cycles or above. To adapt the set to a different line voltage it is necessary to remove the chassis from the cabinet, remove the bottom from the chassis, locate the terminal strip on the bottom of the power transformer and locate the wire leading from the power switch to the terminal strip. After careful measurement of the maximum values of line voltage, unsolder the wire described above, from the lug on the terminal strip and solder it to the correct lug. The correct lug will be the one marked so as to cover or nearly cover the maximum line voltage. THE MAXIMUM LINE VOLTAGE SHOULD NOT EXCEED THE HIGHEST VOLTAGE STAMPED ON THE TERMINAL STRIP BESIDE THE LUG TO BE USED BY MORE THAN 3%.

PHONOGRAPH PICKUP

Chasses equipped with a universal power transformer also have three terminals on the back for connecting a phonograph pickup. These terminals are marked P C S and the pickup is connected through a double pole—single throw switch to these terminals as shown in Fig. 7.

ALIGNMENT PROCEDURE

This is a High Fidelity receiver and in order to secure maximum performance the alignment of its circuits should be done with precision instruments.

Tuning I-F Amplifier to 450 Kilocycles.

The I-F amplifier employs two triple-tuned I-F transformers and under no condition should their trimmer condensers be readjusted just to determine if they are properly tuned. Fig. 5 shows the selectivity curve of a receiver whose I-F amplifier was slightly mis-tuned while Fig. 6 shows a curve made from actual measurements of a receiver which was properly aligned with the use of an oscilloscope.

I. Conventional Method—

(a) Connect one terminal of the output meter to P2 of one of the 6N6 Output tubes and the other terminal through a .1 mf., or larger, condenser—not electrolytic—to P2 of the other 6N6 Output tube.

(b) Connect the output of the signal generator through a .02 mf. condenser to the top cap of the 6K7 I-F Amplifier tube, leaving the tube's grid clip in place. Connect the ground lead from the signal generator to the "GND" terminal of the receiver chassis. KEEP THE GENERATOR OUTPUT LEAD AS FAR AS POSSIBLE FROM THE GRID LEADS OF THE OTHER SCREEN GRID TUBES.

(c) Set the band selector switch to the Broadcast Band and rotate the station selector to approximately 60 on the dial. Turn the volume control knob to the right (ON), turn the tone control knob to the left (TREBLE) and turn the Multivox control knob to the Auditorium Position (Third position in the clockwise direction).

(d) Set the signal generator to 450 kilocycles.

(e) Close the middle trimmer condenser on the 2nd. I-F transformer (Tert. Fig. 4) so that it is moderately tight. (Do not force the adjustment screw).

(f) Adjust the top trimmer and then the bottom trimmer (Sec. & Pri) of the 2nd. I-F transformer for maximum output. ALWAYS USE THE LOWEST SIGNAL GENERATOR OUTPUT THAT WILL GIVE A REASONABLE READING ON THE OUTPUT METER.

(g) Transfer the output lead of the signal generator from the 6K7 tube to the top cap of the 6A8 Osc.-Mod. tube, leaving the tube's grid clip in place.

(h) Open the middle trimmer of the 1st I-F transformer three or four turns from the closed position. (Care should be taken that the adjustment screw does not become dislodged from the nut).

(i) Adjust the top trimmer and then the bottom trimmer of the 1st I-F transformer for maximum output.

(j) Transfer the output lead of the signal generator from the 6A8 tube to the "ANT" terminal of the receiver and increase the output of the signal generator, if necessary.

(k) Adjust the middle trimmer of the 2nd. I-F transformer by opening until maximum output is obtained. DO NOT READJUST THE TOP AND BOTTOM TRIMMERS.

(l) Adjust the middle trimmer of the 1st. I-F transformer by closing until maximum output is obtained. DO NOT READJUST TOP AND BOTTOM TRIMMERS.

II. Oscilloscope Method—

(a) Connect the output of the signal generator through a .02 mf. condenser to the top cap of the 6K7 I-F amplifier tube, leaving the tube's grid clip in place. Connect the ground lead from the signal generator to the receiver chassis. KEEP THE GENERATOR OUTPUT LEAD AS FAR AS POSSIBLE FROM THE GRID LEADS OF THE OTHER SCREEN GRID TUBES.

(b) Connect the vertical plates of the cathode ray oscilloscope to the receiver as follows: The binding post marked "GND" should be connected to the receiver chassis and the other binding post should be connected to the terminal marked "P" of the 6R7 tube. (Be sure the oscilloscope is protected from D. C. by connecting a condenser, .1 to .05 mf., in series with the lead connected to the plate of the 6R7 tube).

(c) Set the band selector switch to the Broadcast Band and rotate the station selector to approximately 60 on the dial. The exact setting should be at a position where no broadcast signal will be received. Turn the volume control knob to the right (ON), turn the tone control knob to the left (TREBLE) and turn the Multivox control knob to the Auditorium Position (Third position in the clockwise direction).

(d) Set the signal generator to 450 kilocycles. See Instructions supplied with signal generator and oscilloscope.

(e) Close the middle trimmer condenser on the 2nd. I-F transformer (Tert Fig. 4) so that it is moderately tight. (Do not force adjustment screw).

(f) Adjust the top trimmer (Sec) of the 2nd. I-F transformer so that the nose of the selectivity curves is centered on the resonance axis (R) of the transparent scale supplied with the oscilloscope.

(g) Adjust the bottom trimmer (Pri) of the 2nd. I-F transformer for maximum amplitude of the selectivity curve on resonance line (R).

(h) Reduce the output of the signal generator and adjust the middle trimmer of the 2nd. I-F transformer for maximum amplitude and symmetry of the selectivity curve about the resonance line.

NOTE: Keep the base of the selectivity curve centered on the transparent scale from −15 to +15 and keep the signal generator output as low as possible in order to prevent AVC action in the receiver.

(i) Readjust the bottom trimmer of the 2nd. I-F transformer for maximum symmetry and amplitude.

(j) Transfer the output lead of the signal generator from the 6K7 tube to the top cap of the 6A8 Modulator tube, leaving the tube's grid clip in place.

(k) Open the middle trimmer of the 1st. I-F transformer three or four turns from the closed position. Care should be taken that the adjustment screw does not become dislodged from the nut).

(l) Increase the output of the signal generator and adjust the top trimmer (Sec) of the 1st. I-F transformer for maximum symmetry and amplitude.

(m) Adjust the bottom trimmer of the 1st. I-F transformer for maximum amplitude.

(n) Reduce the output of the signal generator and adjust the middle trimmer of the 1st. I-F transformer for maximum symmetry and amplitude.

(o) Carefully repeat operations (h), (i) and (n) for more accurate adjustments.

Aligning R-F Amplifier.

The R-F amplifier can best be aligned in the conventional manner, using a modulated signal generator and output meter.

When aligning the R-F amplifier the output lead of the signal generator is connected to the antenna terminal of the receiver. For the BLUE and RED bands a .00025 mfd. condenser must be connected in series with the output lead of the signal generator and for the high-frequency band a 400 ohm carbon resistor should be used in place of the condenser.

Each band should first be shunt aligned and then series aligned, where provision is made for series alignment (BLUE and RED bands). The band selector switch should be set for the band being aligned and the signal generator should be set to the frequency indicated (c) for each adjustment.

(a) Adjust the "OSC", "R-F" and "ANT" shunt trimmers in the order given for maximum output. Readjust the station selector slightly so that the generator signal is tuned-in with maximum output and then check the adjustments of the "R-F" and "ANT" trimmers in the order given. DO NOT READJUST THE "OSC" TRIMMER.

NOTE: When shunt aligning the RED and GREEN bands care must be exercised so that the circuits will be aligned on the fundamental frequency rather than on the image frequency which is approximately 900 kilocycles less than the fundamental. To check on this, increase the output of the signal generator ten times or more and try to tune-in the signal both at the generator frequency as indicated on the station selector dial and at approximately 900 kilocycles less than the correct frequency. If the circuits have been properly aligned the signal can be tuned-in at both positions but much stronger at the correct position.

(b) To align the series trimmers, 32Y and 32Z Fig. 2, set the signal generator to the frequency indicated below and then tune-in this signal with the station selector for maximum output. At the time that any series trimmer is being adjusted rotate the station selector back and forth slightly until no further improvement in output can be obtained.

(c) Signal Input Frequencies:

	Shunt Aligned	Series Aligned
American Broadcast Band (BLUE)	1700 Kc.	600 Kc.
Police Band (RED)	6000 Kc.	2000 Kc.
High-Frequency Band (GREEN)	18000 Kc.	....

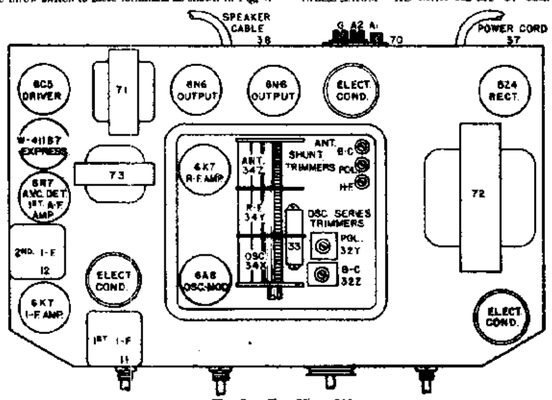

Fig. 2. Top View 916

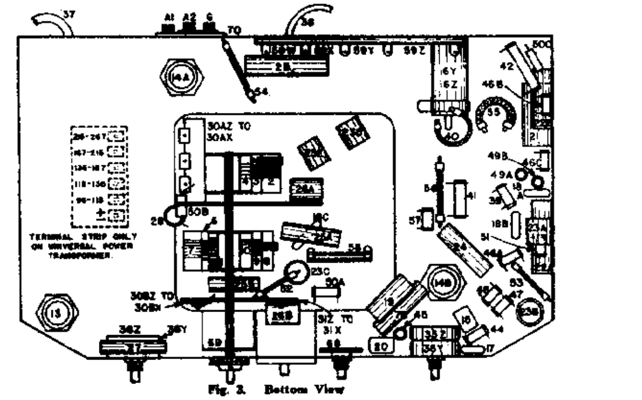

Fig. 3. Bottom View

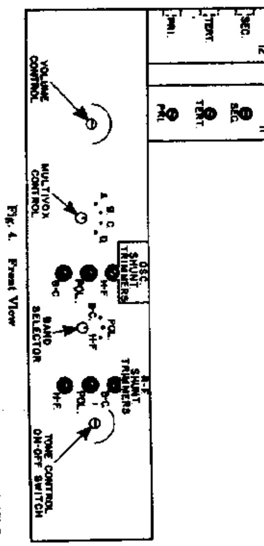

Fig. 4. Front View

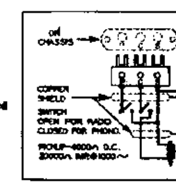

Fig. 7. Phonograph Pickup

CROSLEY RADIO CORP.

MODEL 95
Schemati
Parts

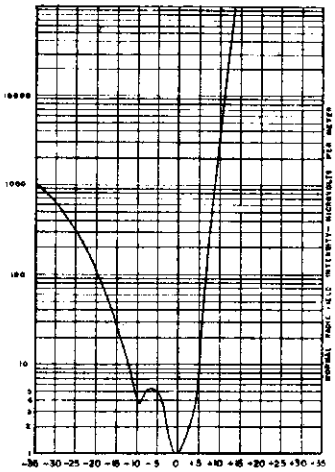

Fig. 5

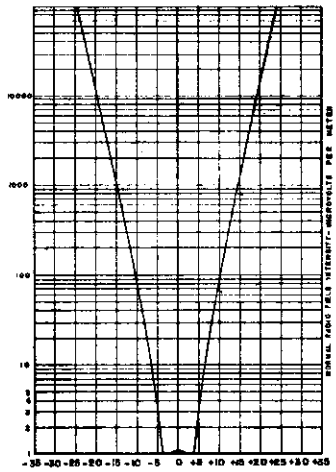

Fig. 6

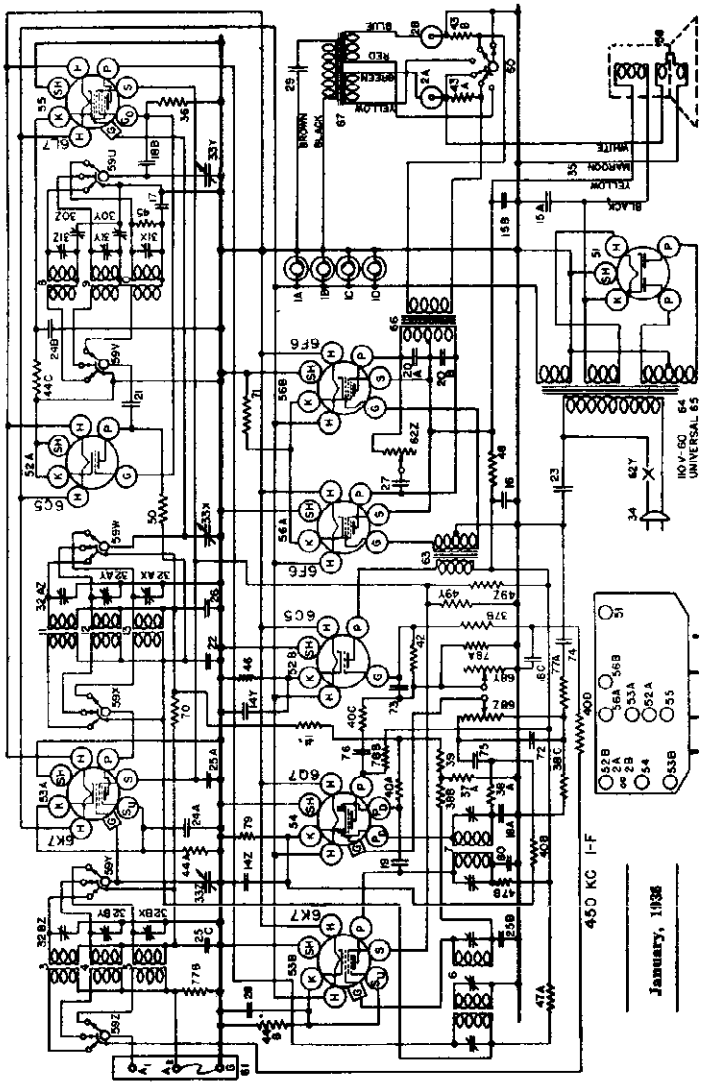

PARTS LIST—MODEL 955

Figures in first column refer to parts in Diagrams.

Item	Part No.	Name	Description
1A	W —37928	Bulb	Dial Light
1B	W —37922	Bulb	Dial Light
1C	W —37922	Bulb	Dial Light
1D	W —37922	Bulb	Indicator light
2A	W —37921	Bulb	Auto Expressionator Ballast
2B	W —37921	Bulb	Auto Expressionator Ballast
3	G84 —32000	Coil	Ant. 540-1900 Kc.
4	G85 —32000	Coil	Ant. 1900-6000 Kc.
5	G83 —32000	Coil	Ant. 6-18 Mc.
6	G80 —32004	Coil	1st I. F. Trans. Assm.
7	G82 —32004	Coil	2nd I. F. Trans. Assm.
8	G88 —32002	Coil	Osc. 540-1900 Kc.
9	G81 —32002	Coil	Osc. 1900-6000 Kc.
10	G78 —32002	Coil	Osc. 6-18 Mc.
11	G86 —32001	Coil	R. F. 540-1900 Kc.
12	G89 —32001	Coil	R. F. 1900-6000 Kc.
13	G87 —32001	Coil	R. F. 6-18 Mc.
14Z	W —37778	Condenser	12 mfd. 25 Volt.
14Y		Condenser	12 mfd. 25 Volt.
15A	W —30055	Condenser	35 mfd. 400 Volt
15B	W —30055	Condenser	35 mfd. 400 Volt
16	W —30057	Condenser	40 mfd. 300 Volt
17	G18 —34000	Condenser	.0006 mfd. mica
18A	G2 —34002	Condenser	.0001 mfd. mica
18B	G2 —34002	Condenser	.0001 mfd. mica
18C	G2 —34002	Condenser	.0001 mfd. mica
19	G1 —34002	Condenser	.00025 mfd. mica
20A	W —35139	Condenser	.004 mfd. 400 Volt
20B	W —35139	Condenser	.004 mfd. 400 Volt
21	W —30047	Condenser	.006 mfd. 400 Volt
22	W —32576	Condenser	.01 mfd. 400 Volt
23	W —30805	Condenser	.01 mfd. 400 Volt
24A	W —30541	Condenser	.02 mfd. 100 Volt
24B	W —30541	Condenser	.02 mfd. 100 Volt
25A	W —35699	Condenser	.05 mfd. 200 Volt
25B	W —35699	Condenser	.05 mfd. 200 Volt
25C	W —35699	Condenser	.05 mfd. 200 Volt
26	W —32580	Condenser	.05 mfd. 200 Volt
27	W —23015	Condenser	.05 mfd. 400 Volt
28	W —24049D	Condenser	.1 mfd. 200 Volt
29	W —37732	Condenser	.3 mfd. 100 Volt
30A	—37874	Condenser	Series Trimmer
30B		Condenser	Series Trimmer
31Z		Condenser	Osc. Trimmer 540-1900 Kc.
31Y	W —35051	Condenser	Osc. Trimmer 1900-600 Kc.
31X		Condenser	Osc. Trimmer 6-18 Mc.
32AX		Condenser	R. F. Trimmer 540-1900 Kc.
32AY	W —37801	Condenser	R. F. Trimmer 1900-6000 Kc.
32AX		Condenser	R. F. Trimmers 6-18 Mc.
32BZ		Condenser	Ant. Trimmer 540-1900 Kc.
32BY	W —37801	Condenser	Ant Trimmer 1900-6000 Kc.
32BX		Condenser	Ant. Trimmer 6-18 Mc.
32Z			
32Y	G47 —83002	Condenser	3 Section Var. Tuning
32X			
34	E —83006A	Cable	Power Supply
35	G1 —37918	Cable	Speaker
36	—21458	Resistor	40,000 ohm, ½ W.
37A	—23403	Resistor	150,000 ohm, ½ W.
37B	—23403	Resistor	150,000 ohm, ½ W.
38A	—21455	Resistor	300,000 ohm ½ W.
38B	—21455	Resistor	300,000 ohm ½ W.
38C	—21455	Resistor	300,000 ohm ½ W.
39	—33344	Resistor	400,000 ohm, ½ W.
40A	—29795	Resistor	500,000 ohm, ½ W.
40B	—23795	Resistor	500,000 ohm, ½ W.
40C	—23795	Resistor	500,000 ohm, ½ W.
40D	—23795	Resistor	500,000 ohm, ½ W.
41	—29580	Resistor	1. megohm, ½ W. Insul.
42	—29577	Resistor	3. megohm, ½ W.
43A	—40445	Resistor	3.5 ohm, wire wound
43B	—40445	Resistor	3.5 ohm, wire wound
44A	W —29569	Resistor	330 ohm, ½ W. Flex.
44B	W —29569	Resistor	330 ohm, ½ W. Flex.
44C	W —29569	Resistor	330 ohm, ½ W. Flex.
45	—21876	Resistor	10,000 ohm, ½ W. carbon
46	W —21432	Resistor	1,100 ohm, ½ W. Flex.
47A	W —25013	Resistor	2,000 ohm, 1¼ W. Flex.
47B	W —25013	Resistor	2,000 ohm, 1¼ W. Flex.
48	W —37991	Resistor	1,000 ohm, 4½ W. wire wnd.
49Z	W —37965	Resistor	4,000 ohm candohm
49Y		Resistor	4,000 ohm
50	W —37987	Resistor	13,000 ohm
51	G154—36400	Socket	Type 5Z4
52A	G152—36400	Socket	Type 6C5
52B	G153—36400	Socket	Type 6C5
53A	G151—36400	Socket	Type 6K7
53B	G161—36400	Socket	Type 6K7
54	G160—36400	Socket	Type 6Q7
55	G159—36400	Socket	Type 6L7
56A	G155—36400	Socket	Type 6F6
56B	G156—36400	Socket	Type 6F6
57	G1 —37965	Socket	Auto Express. Assem.
58	833- CJ 4	Speaker	
59Z			
59	C —37958	Switch	Band Selector
59Y			
60	W —37956	Switch	Auto Expressionator
61	G27 —26719	Terminal	Ant. & Ground. Assem.
62Z	—37986	Tone Control & A. C. Switch	
62Y			
63	G1 —37995	Transformer	Audio
64	G43 —37989	Transformer	Power 110 V. 60 cycle
65	—37995	Transformer	Universal
66	G37 —26838	Transformer	Output
67	G36 —24038	Transformer	Auto Expressionator
68Z	—37997	Volume	.5 meg. 1st A. F. Grid
68Y		Control	1 meg. 2nd A. F. Grid
69	—None		
70	—35001	Resistor	300,000 ohms, Ins.
71	W —25713	Resistor	220 ohms, 2¼ W. Flex.
72	G6 —34002	Condenser	.0005 mfd.—mica
73	G3 —34002	Condenser	.0005 mfd.—mica
74	W —37998	Condenser	.017 mfd. 200 Volt
75	W —30831	Condenser	.02 mfd. 200 Volt
76	W —30488	Condenser	.02 mfd. 400 Volt
77A	—22851	Resistor	15,000 ohm, ½ W.
77B	—22851	Resistor	15,000 ohm, ½ W.
78A	—35900	Resistor	100,000 ohm, ½ W. Ins.
78B	—35900	Resistor	100,000 ohm, ½ W. Ins.
79	W —30650	Resistor	2000 ohm 2½ W. Flex.
80	W —S27505	Condenser	.05 mfd. 400 Volt
	—37946	Dial Assy.	Complete
	—40533	Belt	Drive
	—40537	Coupling	Flex. Drive
C	—40198	Face	Celluloid Dial
C	—37988	Dial Face	Glass Dial
	—40450	Pointer	Long
	—40434	Pointer	Short
	—40486	Screw	Pointer Retaining
B	—37986	Lens	Dial
B	—37987	Spring	Dial Lens Retaining
C	—37984	Escutcheon	
B	—37985	Spring	Escutcheon Retaining
W	—40985	Felt	Escutcheon
W	—37117	Foot	Rubber Mgt.
	—40487	Cable	Indicator Control
W	—37939	Knob	2 Required
W	—40199	Knob	2 Required
W	—37990	Pulley	Band Selector Switch
G2	—37965	Socket	Dial Light
G3	—37965	Socket	Indicator Light

©John F. Rider, Publisher

©John F. Rider, Publisher

MODEL 955
Socket, Trimmers
Chassis, Voltage
Alignment

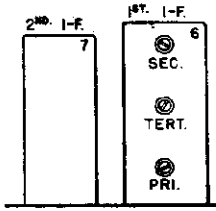

AUTO EXPRESSIONATOR

The auto-expressionator circuit, Items numbered 2A, 2B, 29, 43A, 43B, 60 and 67, reduces the volume of soft tones and sustains the volume of loud tones. This gives a wider volume range to reproduced music and tends to compensate for the electrical limitations of broadcasting equipment. The condenser and transformer, Items 29 and 67, provide bass compensation by preventing normal suppression of low frequency tones.

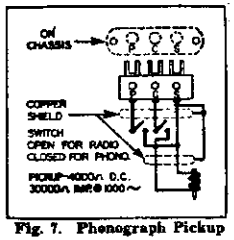

Fig. 7. Phonograph Pickup

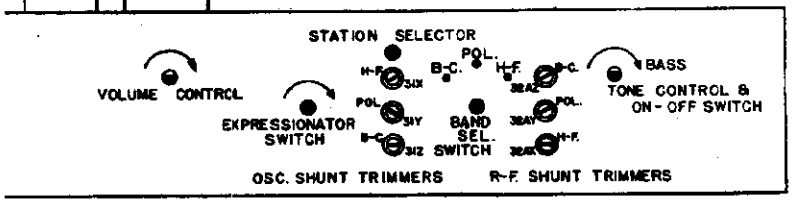

Fig. 4. Front View

TUBE SOCKET VOLTAGE READINGS

Tube	Function	H	P	S	Su	G	K	Go
6K7	R-F Amplifier	6.4	185	85	3.0	0	3.0	—5 to —30
6L7	Modulator	6.4	180	85	—	0	3.0	—5 to —30
6C5	Oscillator	6.4	110	—	—	—5 to —30	0	—
6K7	I-F Amplifier	6.4	195	85	3.0	0	3	—
6Q7	Diode and A-F Amplifier	6.4	130	—	—	0	2.0	—
6C5	Output Driver	6.4	185	265	—	0	16.0	—
6F6	(2) Output	6.4	360	—	—	—	—	—
5Z4	Rectifier	6.9	350	—	—	0	6.5	—

VOLTAGE DROP ACROSS SPEAKER FIELD 80 VOLTS. POWER OUTPUT APPROXIMATELY 10 WATTS.
POWER CONSUMPTION APPROXIMATELY 125 WATTS.
ALL READINGS TAKEN ON 117.5 VOLT POWER SUPPLY.

UNIVERSAL POWER TRANSFORMER

The Model 955 chassis for use on other than 110 volts—60 cycles, is supplied with a universal power transformer designed to operate on a power supply of from 95 to 267 volts and any commercial frequency of 25 cycles or above. To adapt the set to a different line voltage it is necessary to remove the chassis from the cabinet, remove the bottom from the chassis, locate the terminal strip on the bottom of the power transformer and locate the wire leading from the power switch to the terminal strip. After careful measurement of the maximum values of line voltage, unsolder the wire described above, from the lug on the terminal strip and solder it to the correct lug. The correct lug will be the one marked so as to cover or nearly cover the maximum line voltage. THE MAXIMUM LINE VOLTAGE SHOULD NOT EXCEED THE HIGHEST VOLTAGE STAMPED ON THE TERMINAL STRIP BESIDE THE LUG TO BE USED BY MORE THAN 3%.

PHONOGRAPH PICKUP

Chassis equipped with a universal power transformer also have three terminals on the back for connecting a phonograph pickup. These terminals are marked P C S and the pickup is connected through a double pole—single throw switch to these terminals as shown in Fig. 7.

ALIGNMENT PROCEDURE

This is a high fidelity receiver and in order to secure maximum performance the alignment of its circuits should be done with the use of precision instruments.

Tuning I-F Amplifier to 450 Kilocycles.

The I-F amplifier employs a triple-tuned I-F transformer in conjunction with a double-tuned I-F transformer in order to secure flat top tuning. The trimmer condensers in these transformers are very accurately adjusted at the factory and should not be readjusted unless it is definitely known that the circuits are mis-aligned or after new parts have been installed. The graphic representation in Fig. 5, shows the selectivity curve of a receiver whose I-F amplifier is slightly mis-tuned. This is only one of hundreds of curves that were obtained through mis-alignment. Fig. 6, shows a curve made from actual measurements of a receiver which was properly aligned with the use of an oscilloscope.

The circuits of this receiver may be most accurately aligned with the aid of an oscilloscope. However, if an oscilloscope is not available a good alignment may be obtained by means of a signal generator and an output meter provided the following procedure is carefully observed.

(a) Connecting Output Meter: Connect one terminal of the output meter to the plate of one of the 6F6 Output tubes and the other terminal through a .1 mfd., or larger, condenser—not electrolytic—to the plate of the other 6F6 Output tube.

(b) Connect the output of the signal generator through a .02 mfd. condenser to the top cap of the 6K7 I-F amplifier tube, leaving the tube's grid clip in place. Connect the ground lead from the signal generator to the ground terminal of the receiver chassis.

(c) Set the band selector switch to the broadcast band and rotate the station selector to approximately 60 on the dial. Turn the volume control knob to the right (ON), turn the tone control knob to the left (TREBLE) and turn the expressionator switch OFF.

(d) Set the signal generator to 450 kilocycles.

(e) Adjust the trimmer condensers located on top of the 2nd. I-F transformer for maximum output. (7 Fig. 2).

ALWAYS USE THE LOWEST SIGNAL GENERATOR OUTPUT THAT WILL GIVE A REASONABLE OUTPUT METER READING.

(f) Transfer the output lead of the signal generator from the 6K7 tube to the top cap of the 6L7 modulator tube, leaving the tube's grid clip in place.

(g) Close the middle trimmer condenser on the 1st. I-F transformer (Tert. Fig. 4) so that it is moderately tight. (Do not force adjusting screw).

(h) Adjust the top and then the bottom trimmer of the 1st I-F transformer for maximum output.

(i) Transfer the output lead of the signal generator from the 6L7 tube to the "ANT" terminal of the receiver and increase the output of the signal generator, if necessary.

(j) Adjust the middle trimmer of the 1st I-F transformer by opening condenser until maximum output is obtained. (DO NOT READJUST THE TOP AND BOTTOM TRIMMERS).

Aligning R-F Amplifier.

When aligning the R-F amplifier the output lead of the signal generator is connected to the antenna terminal of the receiver. For the BLUE and RED bands a .00025 mfd. condenser must be connected in series with the output lead of the signal generator and for the high-frequency band a 400 ohm carbon resistor should be used in place of the condenser.

Each band should first be shunt aligned and then series aligned, where provision is made for series alignment (BLUE and RED bands). The band selector switch should be set for the band being aligned and the signal generator should be set to the frequency indicated (c) for each adjustment.

(a) Adjust the "OSC", "R-F" and "ANT" shunt trimmers in the order given for maximum output. Readjust the station selector slightly so that the generator signal is tuned-in with maximum output and then check the adjustments of the "R-F" and "ANT" trimmers in the order given. DO NOT READJUST THE "OSC" TRIMMER.

NOTE: When shunt aligning the RED and GREEN bands care must be exercised so that the circuits will be aligned on the fundamental frequency rather than on the image frequency which is approximately 900 kilocycles less than the fundamental. To check on this, increase the output of the signal generator ten times or more and try to tune-in the signal both at the generator frequency as indicated on the station selector dial and at approximately 900 kilocycles less than the correct frequency. If the circuits have been properly aligned the signal can be tuned-in at both positions but much stronger at the correct position.

(b) To align the series trimmers, 30Y and 30Z Fig. 2, set the signal generator to the frequency indicated (c) and then tune-in this signal with the station selector for maximum output. At the same time that any series trimmer is being adjusted rotate the station selector back and forth slightly until no further improvement in output can be obtained.

(c) Signal Input Frequencies:

	Shunt Aligned	Series Aligned
American Broadcast Band (BLUE)	1700 Kc.	600 Kc.
Police Band (RED)	6000 Kc.	2500 Kc.
High-Frequency Band (GREEN)	18000 Kc.	.....

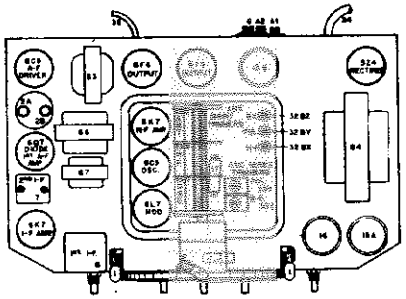

Fig. 2. Top View

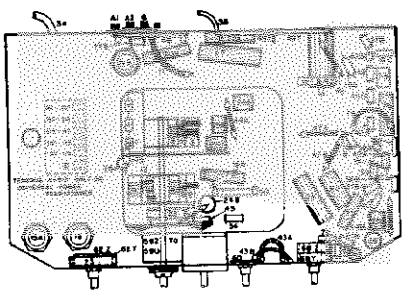

Fig. 3. Bottom View

SPECIFICATIONS

The Crosley Model 955 radio is a nine-tube superheterodyne receiver and uses all metal tubes. It is available either with a standard 110 volt—60 cycle power transformer or with a universal power transformer.

The tubes used are 6K7 R-F Amplifier, 6L7 Modulator, 6C5 Oscillator, 6K7 I-F Amplifier, 6Q7 Diode Detector and A-F Amplifier, 6C5 Output Driver, two 6F6 Output tubes and 5Z4 Rectifier tube.

It is a three band receiver and the dial is divided into three sections as follows:

BLUE	540- 1900 Kilocycles	(American Broadcast Band)
RED	1900- 6500 Kilocycles	(Police and Amateurs)
GREEN	6000-19000 Kilocycles	(High Frequency Band)

CROSLEY RADIO CORP.

MODEL 1016
Schematic
Socket

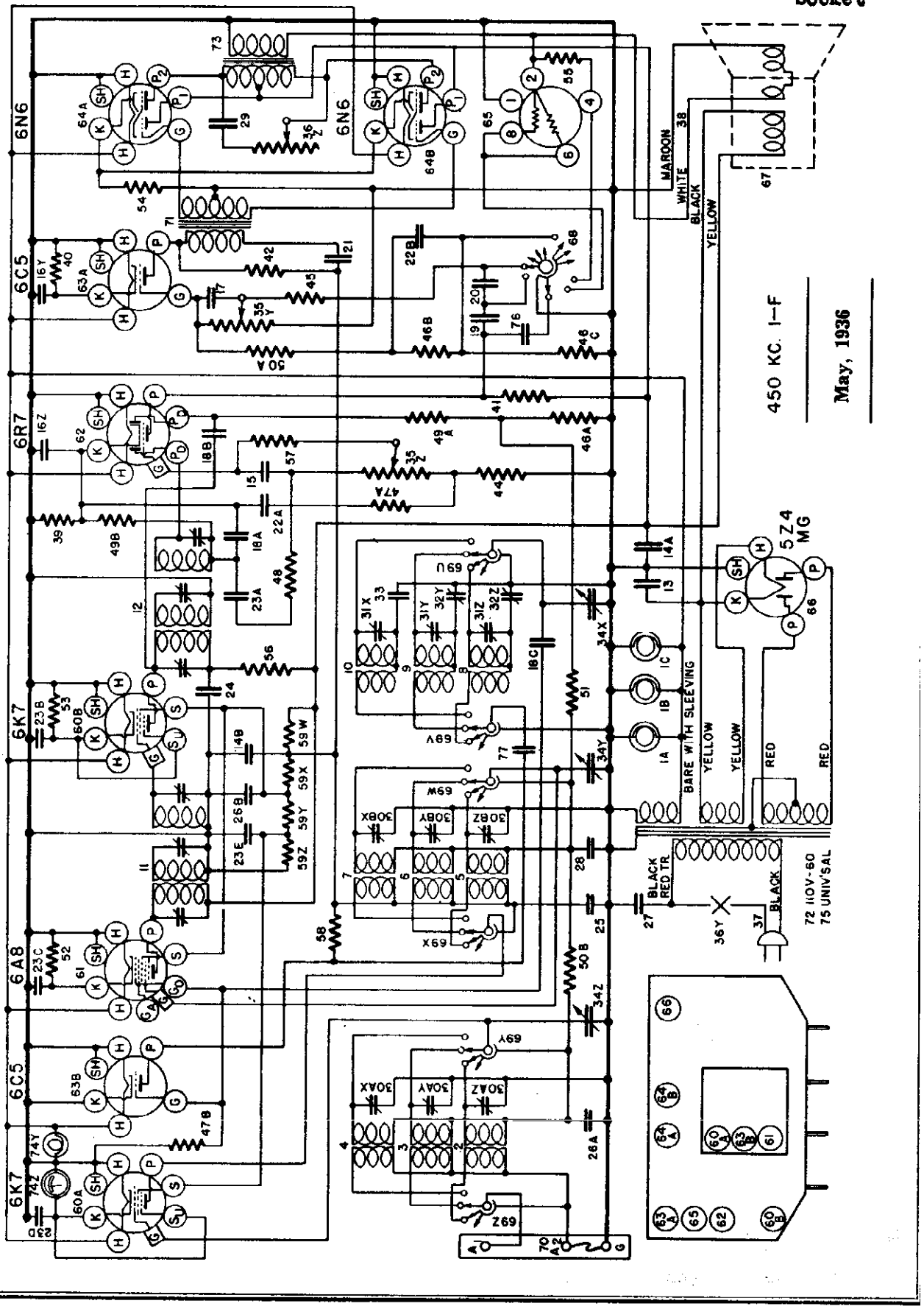

©John F. Rider, Publisher

MODEL 1016
Socket, Trimmers
Chassis, Phono.

CROSLEY RADIO CORP.

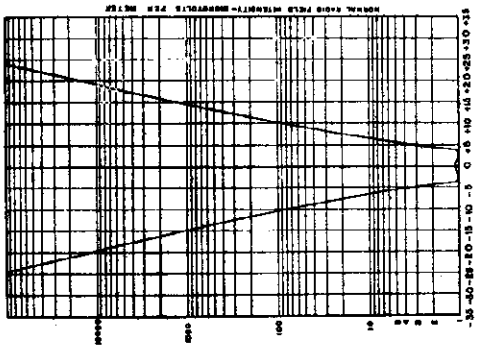

Fig. 6

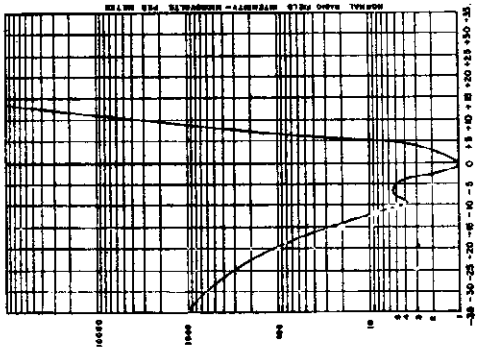

Fig. 5

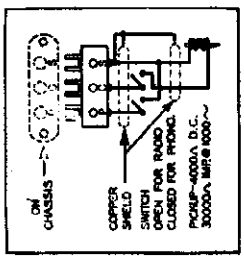

Fig. 7. Phonograph Pickup

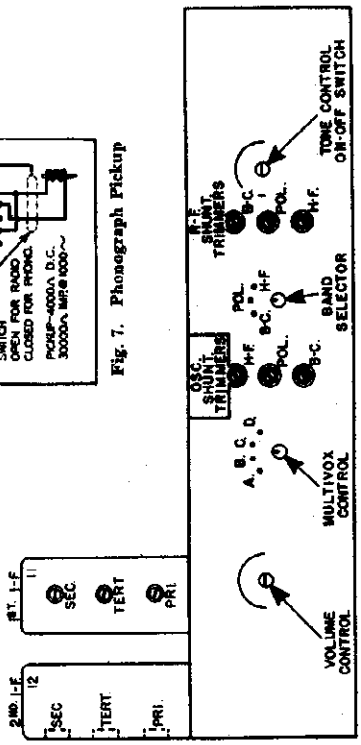

Fig. 4. Front View

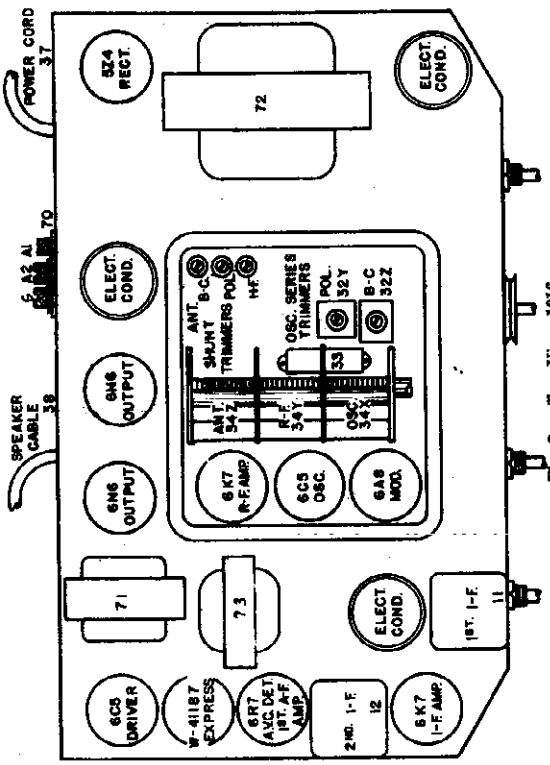

Fig. 2. Top View 1016

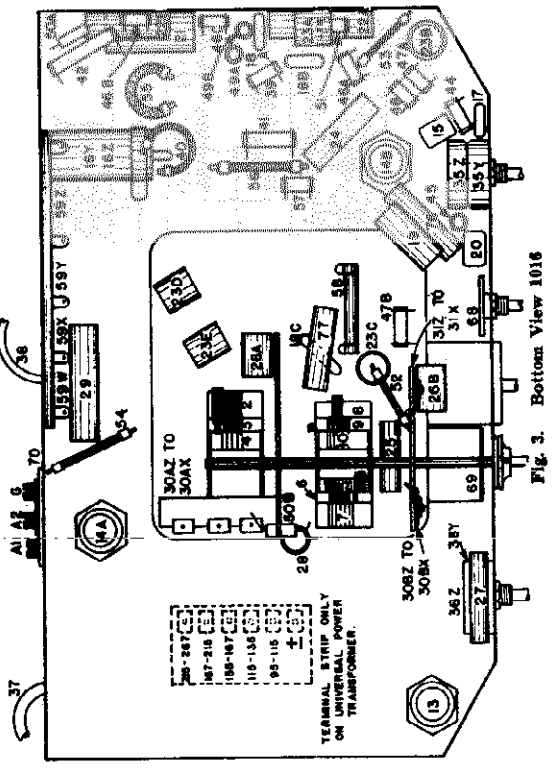

Fig. 3. Bottom View 1016

CROSLEY RADIO CORP.

PHANTOM CONDUCTOR (Auto Expressionator)

The Phantom Conductor tube, Illustration No. 65, is connected across the voice coil of the speaker. When it is operating its resistance varies so as to increase the volume of loud tones, thus giving a wider volume range to reproduced music which tends to compensate for the electrical limitations of broadcasting equipment.

SOCKET VOLTAGES

The tube socket voltages are measured from the tube socket contacts to the chassis with a 1000 ohm per volt 500 volt D.-C. voltmeter (except filaments) with the receiver in operating condition and no signal input. The filament voltages should be measured with an accurate low range A.-C. voltmeter. Readings may vary plus or minus 10% of values given.

UNIVERSAL POWER TRANSFORMER

The Model 1016 chassis for use on other than 110 volts —60 cycles, is supplied with a universal power transformer designed to operate on a power supply of from 95 to 267 volts and any commercial frequency of 25 cycles or above. To adapt the set to a different line voltage it is necessary to remove the chassis from the cabinet, remove the bottom from the chassis, locate the terminal strip on the bottom of the power transformer and locate the wire leading from the power switch to the terminal strip. After careful measurement of the maximum values of line voltage, unsolder the wire described above, from the lug on the terminal strip and solder it to the correct lug. The correct lug will be the one marked so as to cover or nearly cover the maximum line voltage. THE MAXIMUM LINE VOLTAGE SHOULD NOT EXCEED THE HIGHEST VOLTAGE STAMPED ON THE TERMINAL STRIP BESIDE THE LUG TO BE USED BY MORE THAN 3%.

PHONOGRAPH PICKUP

Chassis equipped with a universal power transformer also have three terminals on the back for connecting a phonograph pickup. These terminals are marked P C S and the pickup is connected through a double pole—single throw switch to these terminals as shown in Fig. 7.

ALIGNMENT PROCEDURE

This is a High Fidelity receiver and in order to secure maximum performance the alignment of its circuits should be done with precision instruments.

Tuning I-F Amplifier to 450 Kilocycles.

The I-F amplifier employs two triple-tuned I-F transformers and under no condition should their trimmer condensers be readjusted just to determine if they are properly tuned. Fig. 5 shows the selectivity curve of a receiver whose I-F amplifier was slightly mis-tuned while Fig. 6 shows a curve made from actual measurements of a receiver which was properly aligned with the use of an oscilloscope.

I. Conventional Method—

(a) Connect one terminal of the output meter to P2 of one of the 6N6 Output tubes and the other terminal through a .1 mf., or larger, condenser—not electrolytic —to P2 of the other 6N6 Output tube.

(b) Connect the output of the signal generator through a .02 mf. condenser to the top cap of the 6K7 I-F Amplifier tube, leaving the tube's grid clip in place. Connect the ground lead from the signal generator to the "GND" terminal of the receiver chassis. KEEP THE GENERATOR OUTPUT LEAD AS FAR AS POSSIBLE FROM THE GRID LEADS OF THE OTHER SCREEN GRID TUBES.

(c) Set the band selector switch to the Broadcast Band and rotate the station selector to approximately 60 on the dial. Turn the volume control knob to the right (ON), turn the tone control knob to the left (TREBLE) and turn the Multivox control knob to the Auditorium Position (Third position in the clockwise direction).

(d) Set the signal generator to 450 kilocycles.

(e) Close the middle trimmer condenser on the 2nd. I-F transformer (Tert. Fig. 4) so that it is moderately tight. (Do not force the adjustment screw).

(f) Adjust the top trimmer and then the bottom trimmer (Sec. & Pri) of the 2nd. I-F transformer for maximum output. ALWAYS USE THE LOWEST SIGNAL GENERATOR OUTPUT THAT WILL GIVE A REASONABLE READING ON THE OUTPUT METER.

(g) Transfer the output lead of the signal generator from the 6K7 tube to the top cap of the 6A8 Modulator tube, leaving the tube's grid clip in place.

(h) Open the middle trimmer of the 1st. I-F transformer three or four turns from the closed position. (Care should be taken that the adjustment screw does not become dislodged from the nut).

(i) Adjust the top trimmer and then the bottom trimmer of the 1st I-F transformer for maximum output.

(j) Transfer the output lead of the signal generator from the 6A8 tube to the "ANT" terminal of the receiver and increase the output of the signal generator, if necessary.

(k) Adjust the middle trimmer of the 2nd. I-F transformer by opening until maximum output is obtained. DO NOT READJUST THE TOP AND BOTTOM TRIMMERS.

(l) Adjust the middle trimmer of the 1st. I-F transformer by closing until maximum output is obtained. DO NOT READJUST TOP AND BOTTOM TRIMMERS.

II. Oscilloscope Method—

(a) Connect the output of the signal generator through a .02 mf. condenser to the top cap of the 6K7 I-F amplifier tube, leaving the tube's grid clip in place. Connect the ground lead from the signal generator to the receiver chassis. KEEP THE GENERATOR OUTPUT LEAD AS FAR AS POSSIBLE FROM THE GRID LEADS OF THE OTHER SCREEN GRID TUBES.

(b) Connect the vertical plates of the cathode ray oscilloscope to the receiver as follows: The binding post marked "GND" should be connected to the receiver chassis and the other binding post should be connected to the terminal marked "P" of the 6R7 tube. (Be sure the oscilloscope is protected from D. C. by connecting a condenser, .1 to .05 mf., in series with the lead connected to the plate of the 6R7 tube).

(c) Set the band selector switch to the Broadcast Band and rotate the station selector to approximately 60 on the dial. The exact setting should be at a position where no broadcast signal will be received. Turn the volume control knob to the right (ON), turn the tone control knob to the left (TREBLE) and turn the Multivox control knob to the Auditorium Position (Third position in the clockwise direction).

(d) Set the signal generator to 450 kilocycles. See Instructions supplied with signal generator and oscilloscope.

(e) Close the middle trimmer condenser on the 2nd. I-F transformer (Tert. Fig. 4) so that it is moderately tight. (Do not force adjustment screw).

(f) Adjust the top trimmer (Sec) of the 2nd. I-F transformer so that the nose of the selectivity curves is centered on the resonance axis (R) of the transparent scale supplied with the oscilloscope.

(g) Adjust the bottom trimmer (Pri) of the 2nd. I-F transformer for maximum amplitude of the selectivity curve on resonance line (R).

(h) Reduce the output of the signal generator and adjust the middle trimmer of the 2nd. I-F transformer for maximum amplitude and symmetry of the selectivity curve about the resonance line.

NOTE: Keep the base of the selectivity curve centered on the transparent scale from —15 to +15 and keep the signal generator output as low as possible in order to prevent AVC action in the receiver.

(i) Readjust the bottom trimmer of the 2nd. I-F transformer for maximum symmetry and amplitude.

(j) Transfer the output lead of the signal generator from the 6K7 tube to the top cap of the 6A8 Modulator tube, leaving the tube's grid clip in place.

(k) Open the middle trimmer of the 1st. I-F transformer three or four turns from the closed position. (Care should be taken that the adjustment screw does not become dislodged from the nut).

(l) Increase the output of the signal generator and adjust the top trimmer (Sec) of the 1st. I-F transformer for maximum symmetry and amplitude.

(m) Adjust the bottom trimmer of the 1st. I-F transformer for maximum amplitude.

(n) Reduce the output of the signal generator and adjust the middle trimmer of the 1st. I-F transformer for maximum symmetry and amplitude.

(o) Carefully repeat operations (h), (i) and (n) for more accurate adjustments.

Aligning R-F Amplifier.

The R-F amplifier can best be aligned in the conventional manner, using a modulated signal generator and output meter.

When aligning the R-F amplifier the output lead of the signal generator is connected to the antenna terminal of the receiver. For the BLUE and RED bands a .00025 mfd. condenser must be connected in series with the output lead of the signal generator and for the high-frequency band a 400 ohm carbon resistor should be used in place of the condenser.

Each band should first be shunt aligned and then series aligned, where provision is made for series alignment (BLUE and RED bands). The band selector switch should be set for the band being aligned and the signal generator should be set to the frequency indicated (c) for each adjustment.

(a) Adjust the "OSC", "R-F" and "ANT" shunt trimmers in the order given for maximum output. Readjust the station selector slightly so that the generator signal is tuned-in with maximum output and then check the adjustments of the "R-F" and "ANT" trimmers in the order given. DO NOT READJUST THE "OSC" TRIMMER.

NOTE: When about aligning the RED and GREEN bands care must be exercised so that the circuits will be aligned on the fundamental frequency rather than on the image frequency which is approximately 900 kilocycles less than the fundamental. To check on this, increase the output of the signal generator ten times or more and try to tune-in the signal both at the generator frequency as indicated on the station selector dial and at approximately 900 kilocycles less than the correct frequency. If the circuits have been properly aligned the signal can be tuned-in at both positions but much stronger at the correct position.

(b) To align the series trimmers, 32Y and 32Z Fig. 2, set the signal generator to the frequency indicated below and then tune-in this signal with the station selector for maximum output. At the time that any series trimmer is being adjusted rotate the station selector back and forth slightly until no further improvement in output can be obtained.

(c) Signal Input Frequencies:

	Shunt Aligned	Series Aligned
American Broadcast Band (BLUE)	1700 Kc.	600 Kc.
Police Band (RED)	6000 Kc.	2000 Kc.
High-Frequency Band (GREEN)	18000 Kc.	———

SPECIFICATIONS

The Crosley Model 1016 radio is a ten-tube superheterodyne receiver and is available either with a standard 110 volt—60 cycle power transformer or with a universal power transformer.

The tubes used are 6K7 R-F Amplifier, 6A8 Modulator, 6C5 Oscillator, 6K7 I-F Amplifier, 6R7 Detector and 1st Audio Amplifier, 6C5 2nd Audio Amplifier, two 6N6 Output, 5Z4 Rectifier and the newly developed Phantom Conductor or Volume Expander tube.

The tuning range of the receiver is from 540 to 19000 Kilocycles and is divided into three bands as follows:

BLUE	540–1600 Kc.	or	555–188 Meters	(American Broadcast Band)
RED	1.9–6.3 Megacycles	or	158–46 Meters	(Police & Amateurs)
GREEN	6.0–19 Megacycles	or	50–16 Meters	(High Frequency Band)

PARTS LIST—MODEL 1016

Figures in first column refer to parts in Diagrams.

Item No.	Part No.	Description
1ABC	W —37922	Dial Light
	G3 —37965	Dial Light Socket
2	C94 —32000	Ant. Coil, B. C. B.
3	C95 —32000	Ant. Coil, Pol. B.
4	[illegible]	Ant. Coil, H. F. B.
5	[illegible]	R. F. Coil, B. C. B.
6	[illegible]	R. F. Coil, Pol. B.
7	[illegible]	R. F. Coil, H. F. B.
8	[illegible]	Osc. Coil, B. C. B.
9	[illegible]	Osc. Coil, Pol. B.
10	[illegible]	Osc. Coil, H. F. B.
11	[illegible]	1st I. F. Assembly
12	[illegible]	2nd I. F. Assembly
13	[illegible]	[illegible] Electrolytic
14A	[illegible]	[illegible] Electrolytic
14B	[illegible]	[illegible] Electrolytic
15	[illegible]	[illegible] (Molded)
16Z	[illegible]	[illegible] Electrolytic
16Y	[illegible]	[illegible] Electrolytic
17	[illegible]	[illegible] (Molded)
18A	[illegible]	[illegible] (Molded)
18B	[illegible]	[illegible] (Molded)
18C	[illegible]	[illegible] (Molded)
19	[illegible]	[illegible] V.
20	[illegible]	[illegible] (Molded)
21	[illegible]	[illegible] V.
22A	[illegible]	[illegible] V.
22B	[illegible]	[illegible] V.
23A to 23E	[illegible]	[illegible] V.
24	[illegible]	[illegible] V.
25	[illegible]	[illegible] V.
26A	[illegible]	[illegible] V.
26B	[illegible]	[illegible] Mfd. 200 V.
27	[illegible]	[illegible] Mfd. 400 V.
28	[illegible]	[illegible] Mfd. 200 V.
29	[illegible]	[illegible] Mfd. 400 V.
30	[illegible]	[illegible] Trimmer Assembly
31	[illegible]	[illegible] Trimmer Assembly
32Z	[illegible]	[illegible] Trimmer Cond.
32Y	[illegible]	[illegible] Trimmer Cond.
33	[illegible]	[illegible] Condenser
34	[illegible]	[illegible] Tuning Cond.
	[illegible]	[illegible] Assembly Complete
	[illegible]	[illegible])
	[illegible]	[illegible]
	[illegible]	[illegible] Cushion
	[illegible]	[illegible]
	[illegible]	[illegible]
	[illegible]	[illegible] Screw
	[illegible]	[illegible]
	[illegible]	[illegible]
	[illegible]	[illegible]
35	[illegible]	[illegible] 1st A. F. 3 Meg.
35	[illegible]	[illegible] 2nd A. F. 1 Meg.
36	[illegible]	[illegible]
36	[illegible]	[illegible]
37	B —33808A	Power Cord & Plug
38	G3 —37918	Speaker Cable
39	—31089	Resistor, 2,700 Ohm ½ W.
40	W —21452	Resistor, 1,100 Ohm ½ W. Flex.
41	—37768	Resistor, 65,000 Ohm ½ W.
42	—5370A	Resistor, 20,000 Ohm 1 W.
43	None	
44	—21454	Resistor, 1 Megohm ½ W.
45	—21456	Resistor, 300,000 Ohm ½ W.
46A	—23785	Resistor, 500,000 Ohm ½ W.
46B	—23785	Resistor, 500,000 Ohm ½ W.
46C	—23786	Resistor, 500,000 Ohm ½ W.
47A	—21453	Resistor, 40,000 Ohm ½ W.
47B	—21453	Resistor, 40,000 Ohm ½ W.
48	—23403	[illegible] ½ W.
49A	[illegible]	[illegible] ½ W.
49B	[illegible]	[illegible] ½ W.
50A	[illegible]	[illegible] ½ W.
50B	[illegible]	[illegible] ½ W.
51	[illegible]	[illegible] W.
52	W [illegible]	[illegible] W. Flex.
53	W [illegible]	[illegible] W. Flex.
54	W [illegible]	[illegible] W. Flex.
55	W [illegible]	[illegible] Ohm 2¼ W. Flex.
56	W [illegible]	[illegible],000 Ohm 1¼ W. Flex.
57	[illegible]	[illegible],000 Ohm ½ W.
58	W [illegible]	[illegible] 5,000 Ohm 1 W. Wire Wound
59	W [illegible]	[illegible] Candohm
60A	G1 [illegible]	Socket Type 6K7
60B	G1 [illegible]	Socket Type 6K7
61	G1 [illegible]	Socket Type 6A8
62	G1 [illegible]	Socket Type 6R7
63A	G1 [illegible]	Socket Type 6C5
63B	G1 [illegible]	Socket Type 6C5
64A	G165 [illegible]	Socket Type 6N6
64B	G165 [illegible]	Socket Type 6N6
65	G167 [illegible]	Socket For W41187
66	G154 [illegible]	Socket Type 5Z4
67	[illegible]	Speaker
68	W [illegible]	[illegible] Multivox Control
69	C [illegible]	[illegible] Band Selector
70	G27 [illegible]	[illegible] Terminal Board Assembly
71	G1 [illegible]	[illegible] Input Transformer
72	G43 [illegible]	[illegible] Transformer (110V, 60Cy.)
73	G48 [illegible]	[illegible] Output Transformer
74Z	W [illegible]	[illegible] Meter
74Y	[illegible]	[illegible] Meter Bulb
75	[illegible]	[illegible] Power Transformer
76	W [illegible]	[illegible] .036 Mfd. 400 V.
77	W [illegible]	[illegible] .006 Mfd. 400 V.
	C [illegible]	[illegible]
	B [illegible]	[illegible] Retaining Spring
	B [illegible]	Dial Lens
	B [illegible]	Lens Retaining Spring
	W [illegible]	Escutcheon Felt
	W [illegible]	Knob (3 required)
	W [illegible]	Knob (2 required)

TUBE SOCKET VOLTAGE READINGS

Tube	Function	H	P	P_2	S	Su	G	K	Ga
6K7	R-F Amplifier	6.3	221	—	98	4	0	4	—
6A8	Modulator	6.3	221	—	130	—	0	4.5	4.5
6C5	Oscillator	6.3	140	—	—	—	—	0	—
6K7	I-F Amplifier	6.3	280	—	138	5	0	5	—
6R7	Detector & 1st A-F Amplifier	6.3	130	—	—	—	0	6.5	—
6C5	2nd A-F Amplifier	6.3	180	—	—	—	0	6.8	—
6N6	(2) Output	6.3	278	285	—	—	0	3.3	—
5Z4	Rectifier	4.5	367	—	—	—	—	—	—
Phantom Conductor Tube (W41187)			Varies with power output.						

Voltage drop across speaker field 72 volts.
Power Output approximately 9 Watts.
Power Consumption approximately 117 Watts.
All readings taken on 117.5 volt power supply.

©John F. Rider, Publisher

MODEL 1056, Constitution
Socket, Trimmers, Chassis
Voltage

CROSLEY RADIO CORP.

TUBE SOCKET VOLTAGE READINGS

Tube	Function	H	P	S	Su	G	K	Go	Ga
6K7	R-F Amplifier	6.2	250	103	6	0	6	—	—
6A8	Modulator	6.2	250	103	—	0	6	-1 to -30	107
6C5	Oscillator	6.2	75	—	—	—	0	—	—
6K7	I-F Amp.	6.2	250	103	3	0	3	—	—
6H6	Detector & AVC	6.2	—	—	—	—	0	—	—
6C5	1st. A-F Amp.	6.2	70	—	—	0	3	—	—
6F6	2nd. A-F Amp.	6.2	218	218	—	0	18	—	—
6F6	Output	6.2	355	245	—	0	18	—	—
6F6	Output	6.2	355	245	—	0	18	—	—
5Z4	Rectifier	4.9	365	—	—	—	—	—	—

Measured on 117.5 Volt—60 Cycle Line. Power Consumption Approximately 123 Watts.

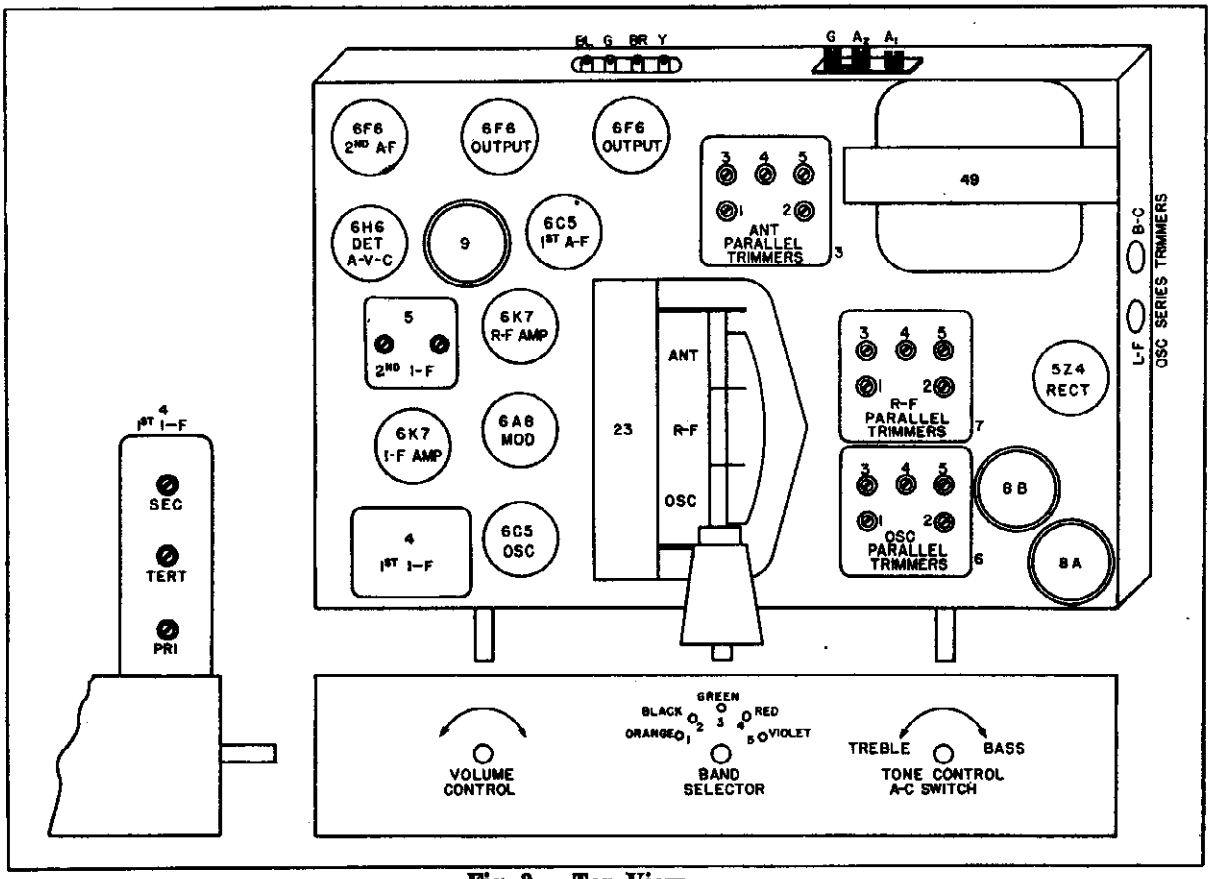

Fig. 2. Top View

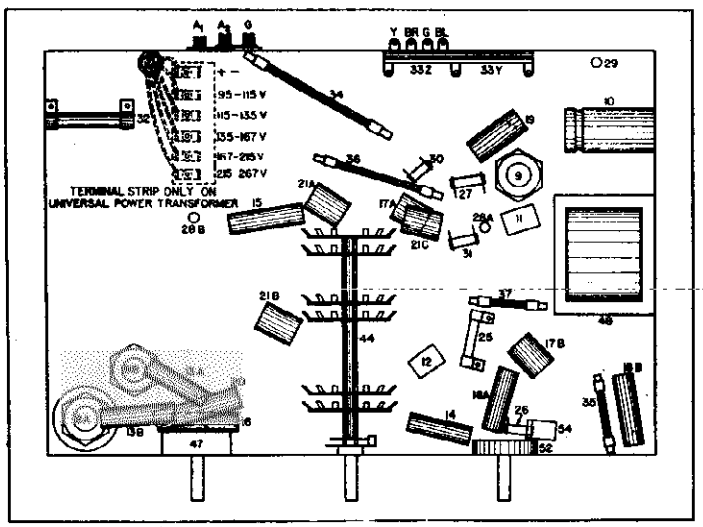

Fig. 3. Bottom View

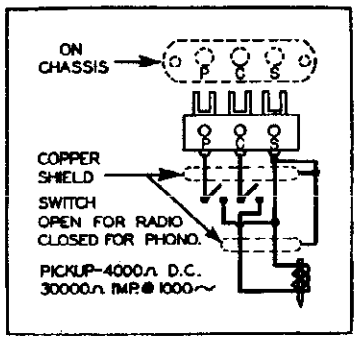

Fig. 4. Phono Connections

©John F. Rider Publisher

CROSLEY RADIO CORP.

MODEL 1055, Constitution
Schematic

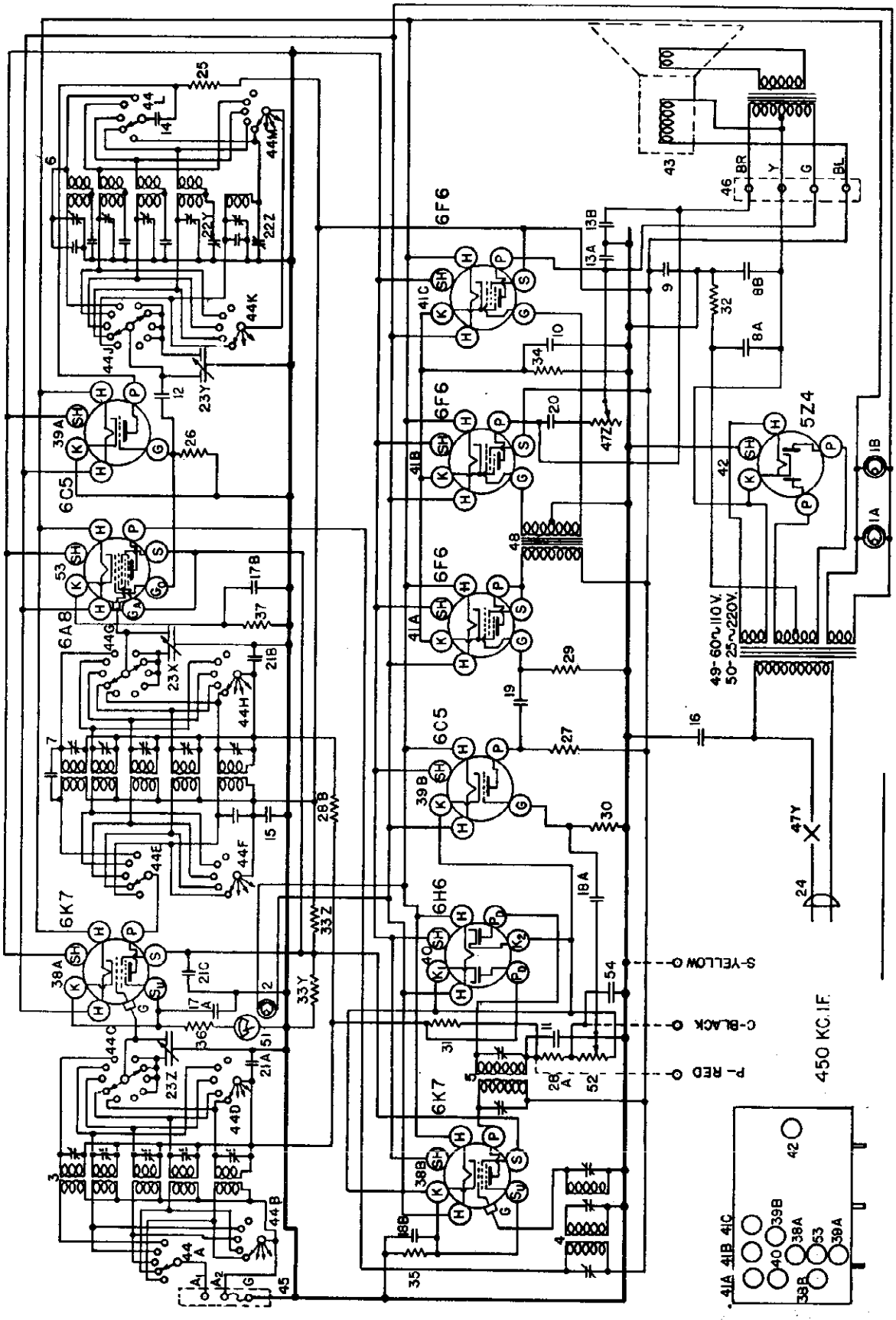

NOVEMBER, 1935

©John F. Rider, Publisher

SPECIFICATIONS

The Crosley Model 1055 radio is a ten-tube superheterodyne receiver and is available either with a standard 110 volt-60 cycle power transformer or with a universal power transformer which can be adapted to A-C lines from 95 to 267 volts and any frequency.

The tubes used are 6K7 R-F Amplifier, 6A8 Modulator, 6C5 Oscillator, 6K7 I-F Amplifier, 6H6 Detector, 6C5 1st. A-F Amplifier, 6F6 2nd. A-F Amplifier, two type 6F6 Output tubes and type 5Z4 Rectifier.

It is a five band receiver and the dial is divided into five sections as follows:

ORANGE—	150- 400 kilocycles	(Weather Band)
BLACK —	540- 1,500 kilocycles	(American Broadcast Band)
GREEN —	1,500- 4,000 kilocycles	(Police and Amateur Band)
RED —	4,000-10,000 kilocycles	(Night High Frequency Band)
VIOLET —	10,000-21,000 kilocycles	(Day High Frequency Band)

The positions on the band selector switch are in the above order, reading from left to right.

SOCKET VOLTAGES

The tube socket voltages are measured from the tube socket contacts to the chassis with a 1000 ohm per volt, 500 voltmeter (except filaments) with the receiver in operating condition and no signal input. Readings may vary plus or minus 10% of values given.

UNIVERSAL POWER TRANSFORMER

The Model 1055 chassis for use on other than 110 volts, 60 cycles, is supplied with a universal power transformer designed to operate on 25 cycles and up. When leaving the factory it is wired for the voltage indicated on the license plate. It is possible, however, by a slight change in the power transformer wiring to adapt the set to a different voltage anywhere from 95 to 267 volts. To adapt the set to a different line voltage it is necessary to remove the chassis from the cabinet, remove the bottom from the chassis and locate the terminal strip on the bottom of the power transformer, Fig. 3. After careful measurement of the maximum values of line voltage, unsolder the wire of the A-C line cord from the terminal strip and solder it to the correct terminal. The correct terminal will be the one marked so as to cover or nearly cover the maximum line voltage. THE MAXIMUM VOLTAGE SHOULD NOT EXCEED THE HIGHEST RATING STAMPED ON THE TERMINAL BOARD BESIDE THE TERMINAL TO BE USED, BY MORE THAN 3%.

PHONOGRAPH PICKUP

Chasses equipped with a universal power transformer also have three terminals on the back for connecting a phonograph pickup. These terminals are marked P C S and the pickup is connected through a double pole —single throw switch to these terminals as shown in Fig. 4.

ALIGNMENT PROCEDURE

All the circuits in this receiver are very accurately adjusted at the factory and should need no further adjustment. However, if it is definitely known that an adjustment is necessary the circuits can be properly aligned only with the use of a modulated signal generator and an output meter.

CONNECTING OUTPUT METER

Connect one terminal of the output meter to the plate of one of the type 6F6 output tubes and connect the other terminal to the plate of the other type 6F6 output tube. Be sure the meter is protected from D.C. by connecting a condenser (.1 mfd. or larger—not electrolytic) in series with one of the leads.

1. Tuning I-F Amplifier to 450 Kilocycles.

(a) Connect the output of the signal generator through a .02 mfd. condenser to the top cap of the 6A8 tube, leaving the tube's grid clip in place. Connect the ground lead from the signal generator to the receiver chassis. KEEP THE GENERATOR OUTPUT LEAD AS FAR AS POSSIBLE FROM THE OTHER SCREEN GRID TUBES.

(b) Set the station selector so that the tuning condenser plates are open. Turn the volume control knob to the right (ON) and turn the tone control knob to the left (TREBLE).

(c) Turn the band selector switch all the way to the right.

(d) Set the signal generator to 450 kilocycles.

(e) Close the middle (tert.) trimmer condenser on the 1st I-F transformer. (Fig. 2.)

(f) Adjust the trimmers located on top of the 2nd. I-F transformer for maximum output.

(g) Adjust the top and bottom trimmers of the 1st. I-F transformer for maximum output.

(h) Repeat operations (f) and (g) for more accurate adjustments.

ALWAYS USE THE LOWEST SIGNAL GENERATOR OUTPUT THAT WILL GIVE A REASONABLE OUTPUT METER READING.

(i) Reduce the output of hte signal generator and adjust the middle (tert.) trimmer on the 1st. I-F transfomer for maximum output. DO NOT READJUST THE OTHER TRIMMERS.

2. Aligning R-F Amplifier.

(a) When aligning the R-F amplifier the output lead from the signal generator is connected to the "Ant" terminal of the receiver. For the ORANGE, BLACK and GREEN bands a .00025 mfd. condenser must be connected in series with the output lead from the signal generator and for the two high frequency bands a 400 ohm carbon resistor should be used in place of the condenser.

Each band should first be shunt aligned and then series aligned where provision is made for series alignment (Weather Band and Broadcast Band). The band selector switch should be set for the band being aligned and the signal generator should be set to the frequency indicated for each adjustment.

Adjust the "Osc," "R-F" and "Ant" trimmers in the order given for maximum output and then check the adjustments in the same order. NOTE: When aligning the Police and High Frequency Bands care must be exercised so that the circuits will be aligned on the fundamental frequency rather than on the image frequency which is always approximately 900 kilocycles less than the fundamental. To check on this, increase the output of the signal generator approximately 10 times and try to tune-in the signal both at the generator frequency as indicated on the station selector dial and at approximately 900 kilocycles below the correct frequency. If the circuits have been properly aligned the signal can be tuned-in at both positions but much stronger at the correct frequency.

To align the "series" trimmer, set the signal generator to the frequency indicated and then tune-in this signal with the station selector for maximum output. Adjust the "series" trimmer while rocking the tuning condenser back and forth slightly, until no improvement in output can be obtained.

After the "series" alignment of any band has been completed it will be necessary to repeat the "shunt" alignment of that band.

PARTS LIST—MODEL 1055

Figures in first column refer to parts shown in diagrams.

Item No.	Part No.	Description
1A	36508	Dial Light Socket Assm.
1B	36504	Dial Light Socket Assm.
2	W —36557	Tuning Meter Bulb.
3	G83 —32000	Ant. Coil Assm. Complete
	G84 —32000	Ant. Coil only 150-400 Kc. (W. B.)
	G88 —32000	Ant. Coil only 540-1500 Kc. (B.B.)
	G85 —32000	Ant. Coil only 1500-4000 Kc. (P.B.)
	G87 —32000	Ant. Coil only 4-10 Mc. (S. W. B.)
	G86 —32000	Ant. Coil only 10-22 Mc. (S. W. B.)
	MG26—36542	Coil Support Base.
	W —36028	5 Section Trimmer Cond. Assm.
	MG9 —36168	Shield.
4	G86 —32004	1st I. F. Trans. Assm.
5	G87 —32004	2nd I. F. Trans. Assm.
6	G54 —32002	Osc. Coil Assm. Complete
	G55 —32002	Osc. Coil only 150-400 Kc.
	G56 —32002	Osc. Coil only 540-1500 Kc.
	G57 —32002	Osc. Coil only 1500-4000 Kc.
	G59 —32002	Osc. Coil only 4-10 Mc.
	G58 —32002	Osc. Coil only 10-22 Mc.
	MG26—36542	Coil Support Base.
	W —36028	5 Section Trimmer Cond. Assm.
	G7 —34007	Condenser 1750 mmf.
	G3 —34007	Condenser 4350 mmf. (2)
	G6 —34002	Condenser 25 mmf. (2)
	MG9 —36168	Shield.
7	G39 —32001	R. F. Coil Assm. Complete
	G40 —32001	R. F. Coil only 150-400 Kc.
	G44 —32001	R. F. Coil only 540-1500 Kc.
	G41 —32001	R. F. Coil only 1500-4000 Kc.
	G43 —32001	R. F. Coil only 4-10 Mc.
	G42 —32001	R. F. Coil only 10-22 Mc.
	MG27—36542	Coil Support Base.
	W —36028	5 Section Trimmer Cond. Assm.
	MG9 —36168	Shield.
8A	W —36055	Condenser 35 mfd. 400 Volts.
8B	W —36055	Condenser 35 mfd. 400 V.
9	W —36057	Condenser 40 mfd. 300 V.
10	W —36548	Condenser 25 mfd. 25 V.
11	G2 —34002	Condenser 0.0001 mfd. 200 V.
12	G1 —34002	Condenser 0.00025 mfd. 200 V.
13A	W —35758	Condenser 0.008 mfd. 400 V.
13B	W —35758	Condenser 0.008 mfd. 400 V.
14	W —35647	Condenser 0.006 mfd. 400 V.
15	W —32378	Condenser 0.01 mfd. 400 V.
16	W —30805	Condenser 0.01 mfd. 400 V.
17A	W —36541	Condenser 0.02 mfd. 150 V.
17B	W —36541	Condenser 0.02 mfd. 150 V.
16A	W —28621	Condenser 0.02 mfd. 200 V.
18B	W —28621	Condenser 0.02 mfd. 200 V.
19	W —32780	Condenser 0.05 mfd. 400 V.
20	W —23615	Condenser 0.05 mfd. 400 V.
21A	W —35936	Condenser 0.05 mfd. 200 V.
21B	W —35936	Condenser 0.05 mfd. 200 V.
21C	W —35936	Condenser 0.05 mfd. 200 V.
22Z, 22Y	G27 —33008	Condenser-trimmer.
23Z, 23Y, 23X	G37 —33002	Var. Tuning Condenser Gang.
	—37276	Dial Drive Assembly.
	—37375A	Dial Face only.
	—37551	Dial Hand.
	—37554	Second Hand.
	—37484	Dial Hand Screw.
	—37543	Dial Hand Washer.
24	B —33906A	A. C. Cord & Plug.
25	W —36545	Resistor 30,000 Ohm.
26	—22196	Resistor 20,000 Ohm.
27	—23403	Resistor 150,000 Ohm.
28A	—21455	Resistor 300,000 Ohm.
28B	—21455	Resistor 300,000 Ohm.
29	—23785	Resistor 500,000 Ohm.
30	—35927	Resistor 2 Megohm.
31	—36588	Resistor 3 Megohm.
32	W —36549	Resistor 200 Ohm 6 Watt.
33Z, 33Y	W —32301	Resistor 10,000 Ohm. 15,000 Ohm.
34	W —22873	Resistor 220 Ohm (Flex.)
35	W —25937	Resistor 275 Ohm (Flex.)
36	W —21964	Resistor 165 Ohm (Flex.)
37	W —22514	Resistor 750 Ohm (Flex.)
38A	G151—36400	Socket, 6K7.
38B	G151—36400	Socket, 6K7.
39A	G152—36400	Socket, 6C5.
39B	G152—36400	Socket, 6C5.
40	G155—36400	Socket, 6H6.
41A	G153—36400	Socket, 6F6.
41B	G153—36400	Socket, 6F6.
41C	G153—36400	Socket, 6F6.
42	G154—36400	Socket, 5Z4.
43	427CL—22	Speaker, Table Model.
	827CL—27	Speaker, Console.
	—36547A	Band Change Switch.
44	G27 —26719	Ant.-Grnd. Terminal.
45	G5 —31128	Speaker Terminal.
46	W —34627	Terminal Board Insulator.
	W —34628	Terminal Board Cover.
47Z, 47Y	—32063	Tone Control. On-Off Switch.
48	G22 —24628	A. F. Transformer.
49	G42 —25669	Power Transformer 50 Cy. 110 V.
50	B —35007B	Universal Power Transformer.
51	W —36500	Tuning Meter.
	W —36501	Tuning Meter Bracket.
52	—32062	Volume Control.
53	G156—36400	Socket, 6A8.
54	G6 —34002	Condenser 0.000025 mfd.
	B —36515	Escutcheon.
	W —36564	Escutcheon indicator
	W —36311	Band Change Escutcheon.
	W —36519	Knob, Tuning.
	W —36520A	Knob, Vernier.
	W —36518	Knob (Tail) Band Change.
	W —36521	Knob (2)

(b) Signal Input Frequencies.

	Shunt Alignment	Series Alignment
Weather Band (ORANGE)	400 Kc.	150 Kc.
American Broadcast Band (BLACK)	1400 Kc.	600 Kc.
Police & Amateur Band (GREEN)	4000 Kc.	—
Night H-F Band (RED)	10 Megacycles	—
Day H-F Band (VIOLET)	21 Megacycles	—

©John F. Rider, Publisher

©John F. Rider, Publisher

MODEL 116
Schematic

The tubes used are 6K7 R-F Amplifier, 6L7 Modulator, 6C5 Oscillator, 6K7 I-F Amplifier, 6H6 Diode Detector, 6Q7 A-F Amplifier, 6F6 Output Driver, two 6F6 Output tubes and two 5Z4 Rectifier tubes.

BLUE	150	—	400	Kilocycles (U. S. Weather Reports)
RED	540	—	1900	Kilocycles (American Broadcast Band)
GREEN	1900	—	6000	Kilocycles (Police and Amateurs)
VIOLET	6000	—	19000	Kilocycles (High Frequency Band)

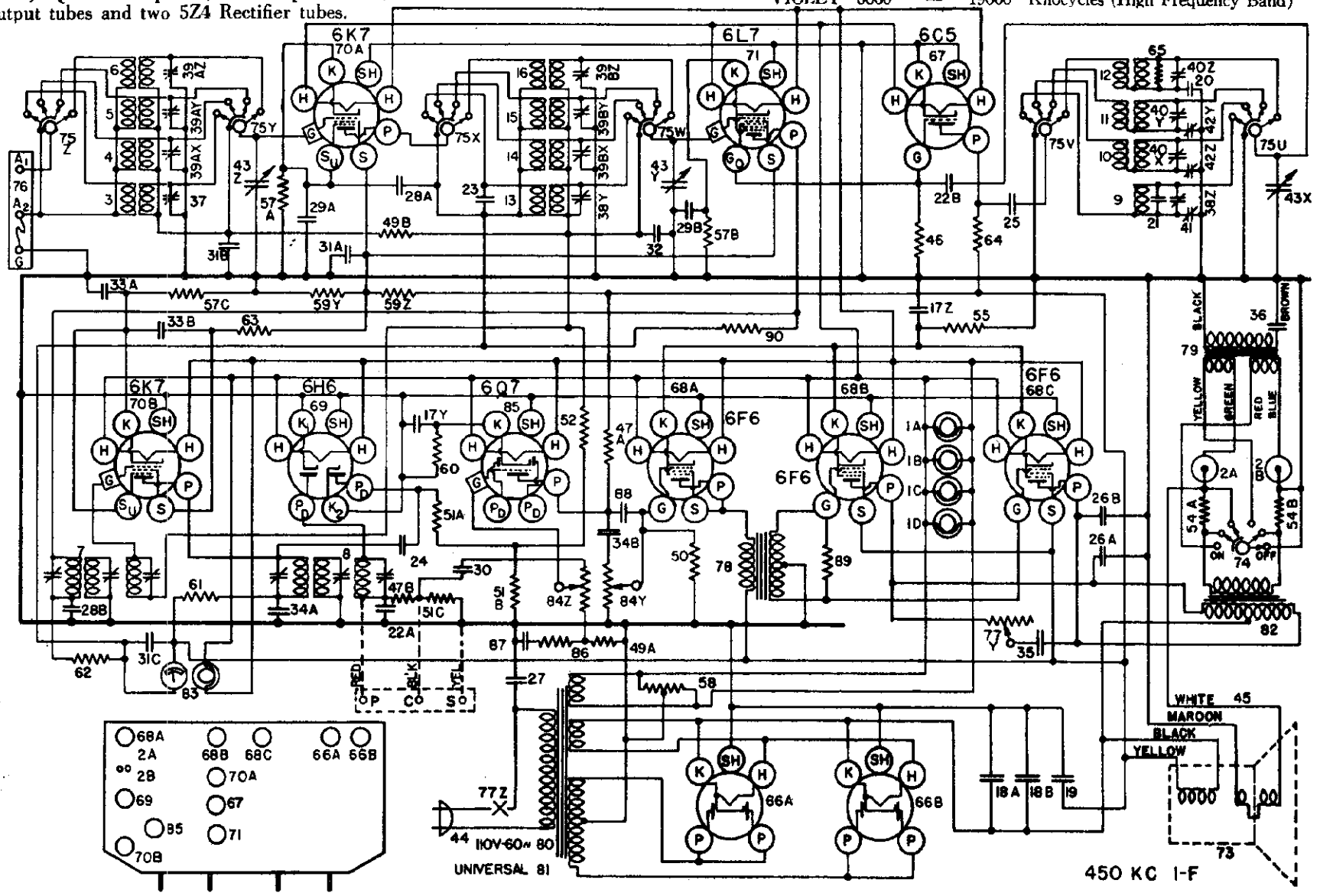

MODEL 1155
Socket, Trimmers

CROSLEY RADIO CORP.

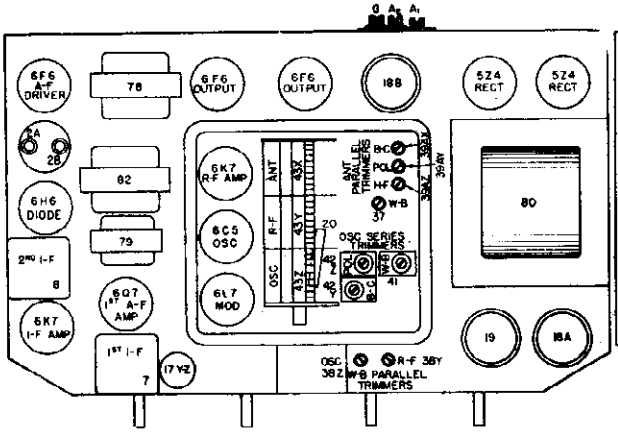

Fig. 2. Top View

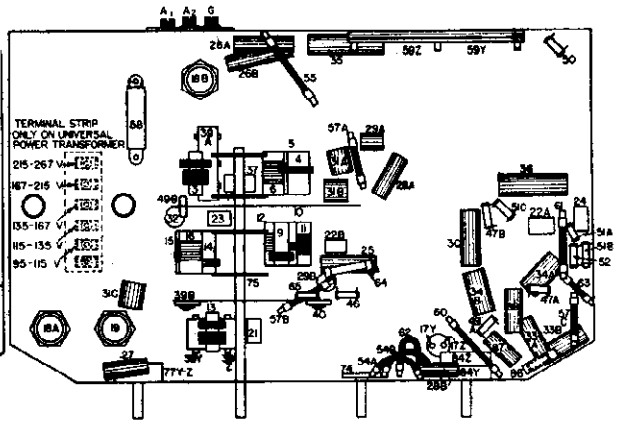

Fig. 3. Bottom View

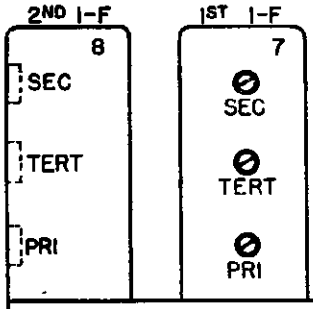

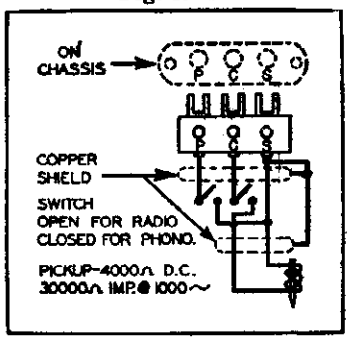

Fig. 7

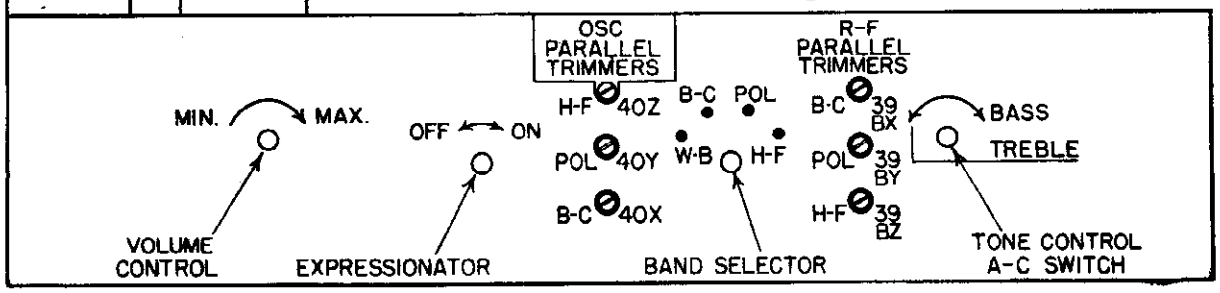

Fig. 4. Front View

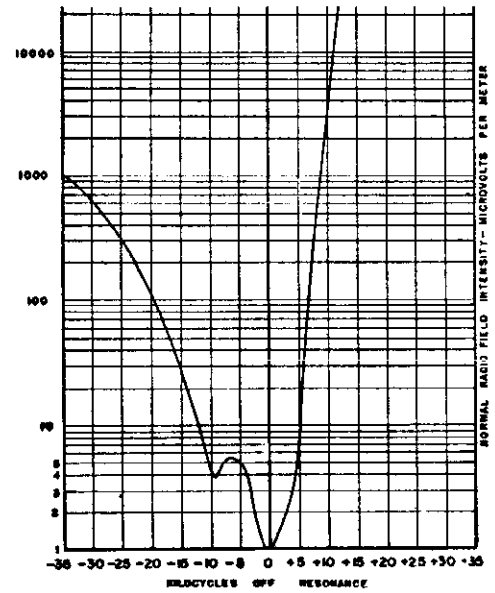

Fig. 5

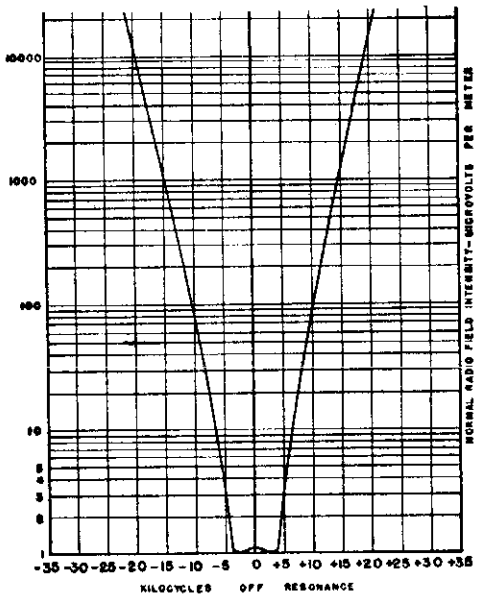

Fig. 6

CROSLEY RADIO CORP.

MODEL 1155
Voltage, Parts
Alignment

TUBE SOCKET VOLTAGE READINGS

Tube	Function	H	P	S	Sn	G	K	Gc
6K7	R. F. Amplifier	6.3	238	100	3	0	3	—
6L7	Modulator	6.3	230	100	—	0	3.5	—5 to —30
6C5	Oscillator	6.3	140	—	—	—5 to —30	—	—
6K7	I-F Amplifier	6.3	230	96	3	0	3	—
6H6	Diode Detector	6.3	—	—	—	—	—	—
6Q7	A. F. Amplifier	6.3	155	—	—	0	2	—
6F6	Output Driver	6.3	210	210	—	0	17	—
6F6	(2) Output	6.3	360	236	—	0	17	—
5Z4	(2) Rectifiers	5.0	360	—	—	—	—	—

VOLTAGE DROP ACROSS SPEAKER FIELD 125 VOLTS. POWER OUTPUT APPROXIMATELY 15.5 WATTS. POWER CONSUMPTION APPROXIMATELY 140 WATTS. ALL READINGS TAKEN ON 117.5 VOLT POWER SUPPLY.

UNIVERSAL POWER TRANSFORMER

The Model 1155 chassis for use on other than 110 volts—60 cycles, is supplied with a universal power transformer designed to operate on a power supply of from 95 to 267 volts and any commercial frequency of 25 cycle or above. To adapt the set to a different line voltage it is necessary to remove the chassis from the cabinet, remove the bottom from the chassis and locate the terminal strip on the bottom of the power transformer. After careful measurement of the maximum values of line voltage, unsolder the wire leading from the power switch from the terminal strip and solder it to the correct terminal. The correct terminal will be the one marked so as to cover or nearly cover the maximum line voltage. THE MAXIMUM VOLTAGE SHOULD NOT EXCEED THE HIGHEST RATING STAMPED ON THE TERMINAL BOARD BESIDE THE TERMINAL TO BE USED BY MORE THAN 3%.

PHONOGRAPH PICKUP

Chassis equipped with a universal power transformer also have three terminals on the back for connecting a phonograph pickup. These terminals are marked P C S and the pickup is connected through a double pole—single throw switch to these terminals as shown in Fig. 7.

ALIGNMENT PROCEDURE

This is a high fidelity receiver and in order to secure maximum performance the alignment of its circuits should be done with the use of precision instruments. The I-F amplifier employs two triple-tuned I-F transformers and under no condition should their trimmer condensers be readjusted just to determine if they are properly tuned. The graphic representation in Fig. 5, shows the selectivity curve of a receiver whose I-F amplifier is slightly mis-tuned. This is only one of hundreds of curves that were obtained through mis-alignment. Fig. 6, shows a curve made from actual measurements of a receiver which was properly aligned with the use of an oscilloscope.

Poor quality, loss of high frequency response and poor selectivity are likely results of an improperly tuned I-F amplifier.

The circuits of this receiver may be most accurately aligned with the aid of an oscilloscope. However, if an oscilloscope is not available a good alignment may be obtained by means of a signal generator and output meter, provided the following procedure is carefully observed.

Connecting Output Meter.

Connect one terminal of the output meter to the plate of one of the 6F6 Output tubes and the other terminal through a .1 mfd., or larger, condenser—not electrolytic—to the plate of the other 6F6 Output tube.

Tuning I-F Amplifier to 450 Kilocycles.

(a) Connect the output of the signal generator through a .02 mfd. condenser to the top cap of the 6K7 I-F amplifier tube, leaving the tube's grid clip in place. Connect the ground lead from the signal generator to the ground terminal of the receiver chassis. KEEP THE GENERATOR OUTPUT LEAD AS FAR AS POSSIBLE FROM THE GRID LEADS OF THE OTHER SCREEN GRID TUBES.

(b) Set the band selector switch to the broadcast band and rotate the station selector to 60 on the Broadcast Band. Turn the volume control knob to the right (ON), turn the tone control knob to the left (TREBLE), and turn the expressionator control knob to the left (OFF).

(c) Set the signal generator to 450 kilocycles.

(d) Close the middle trimmer condenser on the 2nd I-F transformer (Teri. Fig 4) so that it is moderately tight. (Do not force adjusting screw).

(e) Adjust the top and then the bottom trimmers (Sec. and Pri.) of the 2nd I-F transformer for maximum output.

ALWAYS USE THE LOWEST SIGNAL GENERATOR OUTPUT THAT WILL GIVE A REASONABLE OUTPUT METER READING.

(f) Transfer the output lead of the signal generator from the 6K7 tube to the top cap of the 6L7 modulator tube leaving the tube's grid clip in place.

(g) Open the middle trimmer of the 1st I-F transformer three or four turns from the closed position. (Care should be taken that the screw does not become dislodged from the nut).

(h) Adjust the top and then the bottom trimmers of the 1st I-F transformer for maximum output.

(i) Transfer the output lead of the signal generator from the 6L7 tube to the "ANT" terminal of the receiver and increase the output of the signal generator, if necessary.

(j) Adjust the middle trimmer of the 2nd I-F transformer by opening condenser until maximum output is obtained. (DO NOT READJUST THE TOP AND BOTTOM TRIMMERS).

(k) Adjust the middle trimmer of the 1st I-F transformer by closing condenser until maximum output is obtained. (DO NOT READJUST THE TOP AND BOTTOM TRIMMERRS).

Aligning R-F Amplifier.

When aligning the R-F amplifier the output lead of the signal generator is connected to the "ANT" terminal of the receiver. For the BLUE, RED and GREEN, bands a .00025 mfd. condenser must be connected in series with the output lead of the signal generator and for the high-frequency band a 400 ohm carbon resistor should be used in place of the condenser.

Each band should first be shunt aligned and then series aligned where provision is made for series alignment (BLUE, RED and GREEN bands). The band selector switch should be set for the band being aligned and the signal generator should be set to the frequency indicated (c) for each adjustment.

(a) Adjust the "OSC", "R-F" and "ANT" parallel trimmers (Fig. 4 and 2) in the order given for maximum put. Tune the station selector slightly to the generator signal for maximum output and then check the adjustments of the "R-F" (Fig. 4) and "ANT" trimmers (Fig. 2) in the order given. DO NOT READJUST THE "OSC" TRIMMER.

NOTE: When shunt aligning the GREEN and VIOLET bands care must be exercised so that the circuits will be aligned on the fundamental frequency rather than on the image frequency which is approximately 900 kilocycles less than the fundamental. To check on this, increase the output of the signal generator approximately ten times and try to tune-in the signal both at the generator frequency as indicated on the station selector dial and at approximately 900 kilocycles below the correct frequency. If the circuits have been properly aligned the signal can be tuned-in at both positions but much stronger at the correct position.

(b) To align the "series" trimmers (Fig. 2) set the signal generator to the frequency indicated (c) and then tune-in this signal with the station selector for maximum output. Tune the station selector slightly to the generator output. Adjust the series trimmer while rotating the station selector back and forth slightly until no further improvement in output can be obtained.

(c) Signal Input Frequencies for Alignment:

	Shunt Alignment	Series Alignment
Weather Band (BLUE)	400 Kc	180 Kc
American Broadcast Band (RED)	1700 Kc	600 Kc
Police Band (GREEN)	6000 Kc	2500 Kc
High Frequency Band (VIOLET)	18000 Kc	

AUTO-EXPRESSIONATOR

The auto-expressionator circuit, items numbered 2A, 2B, 36, 54A, 54B, 74 and 79, reduces the volume of soft tones and sustains the volume of loud tones. This gives a wider volume range to reproduced music and tends to compensate for the electrical limitations of broadcasting equipment. The transformer and condenser, items No. 79 and 36, provide bass compensation by preventing the normal suppression of low frequency tones.

PARTS LIST—MODEL 1155

Figures in first column refer to parts in Diagrams.

Item No.	Part No.	Name	Description
1A	W —37922	Bulb	Dial Light
B	W —37922		Dial Light
C	W —37922		Dial Light
D	W —37922		Indicator Light
2A	W —40445	Bulb	Auto-Expressionator Ballast
B	W 40445	Bulb	Auto-Expressionator Ballast
	G2 —37965	Socket	Auto-Expressionator Ballast
3	G64—32000	Coil	Ant. 150-400 Kc.
4	G94—32000	Coil	Ant. 540-1900 Kc.
5	G95—32000	Coil	Ant. 1900-6000 Kc.
6	G93—32000	Coil	Ant. 6-18 Mc.
7	G66—32004	Coil	1st I. F. Assem.
8	G91—32004	Coil	2nd I. F. Assem.
9	C79—32002	Coil	Osc. 150-400 Kc.
10	G80—32002	Coil	Osc. 540-1900 Kc.
11	G81—32002	Coil	Osc. 1900-6000 Kc.
12	G78—32002	Coil	Osc. 6-18 Mc.
13	G67—32001	Coil	R. F. 150-400 Kc.
14	G68—32001	Coil	R. F. 540-1900 Kc.
15	G89—32001	Coil	R. F. 1900-6000 Kc.
16	G66—32001	Coil	R. F. 6-18 Mc.
17Z	W —37632	Condenser	25 Mfd., 25 Volt
17Y		Condenser	12 Mfd., 25 Volt
18A	W —36955	Condenser	35 Mfd., 400 Volt
18B		Condenser	35 Mfd., 400 Volt
19	W —36057	Condenser	40 Mfd., 300 Volt
20	G18—34000	Condenser	.0056 Mfd., 300 Volt
21	G6 —34002	Condenser	.000025 Mfd., 200 Volt
22A	G2 —34002	Condenser	.0001 Mfd., 200 Volt
22B	G2 —34002	Condenser	.0001 Mfd., 200 Volt
23	G1 —34002	Condenser	.00025 Mfd., 200 Volt
24	G1 —34005	Condenser	.00025 Mfd., 300 Volt
25	W 34647	Condenser	.006 Mfd., 400 Volt
26A	W —35139	Condenser	.004 Mfd., 400 Volt
26B	W —35139	Condenser	.004 Mfd., 400 Volt
27	W —30865	Condenser	.01 Mfd., 400 Volt
28A	W —32378	Condenser	.01 Mfd., 400 Volt
28B	W —32378	Condenser	.01 Mfd., 400 Volt
29A	W —36541	Condenser	.02 Mfd., 160 Volt
29B	W —36541	Condenser	.02 Mfd., 160 Volt
30	W —28621	Condenser	.02 Mfd., 200 Volt
31A	W —35936	Condenser	.05 Mfd., 200 Volt
31B	W 35936	Condenser	.05 Mfd., 200 Volt
31C	W —35936	Condenser	.05 Mfd., 200 Volt
32	W —32380	Condenser	.05 Mfd., 200 Volt
33A	W —27216	Condenser	.05 Mfd., 200 Volt
33B	W —27216	Condenser	.05 Mfd., 200 Volt
34A	W —32780	Condenser	.05 Mfd., 400 Volt
34B	W —32780	Condenser	.05 Mfd., 400 Volt
35	W —29615	Condenser	.05 Mfd., 400 Volt
36	W —37732	Condenser	.3 Mfd., 160 Volt
37	W —37954	Condenser	Single Ant. Trimmer
38Z	W —37986	Condenser	Double Section Osc. Trimmer
38Y			R. F. Trimmer
39AZ	W —37891	Condenser	Ant. Triple Sec. H. F. Trimmer
39AY			Pol. Trimmer
39AX			B. C. Trimmer
39BZ	W —37891	Condenser	H. F. Trimmer
39BY			R. F. Triple Sec. Pol. Trimmer
39BX			B. C. Trimmer
40Z	W —35951	Condenser	H. F. Trimmer
40Y			Triple Sec. Osc. Pol. Trimmer
40X			B. C. Trimmer
41	—37917	Condenser	L. F. Osc., Series Trimmer
42Z	—37874	Condenser	B. C. Osc. Series Trimmer
42Y			Pol. Osc. Series Trimmer
43Z	G47—33002	Condenser	3 Section Var. Tuning
43Y			
43X			
44	B —33906-A	Cable	Power Supply
45	G1 —37918	Cable	Speaker
46	—21463	Resistor	40,000 Ohms, ½ W.
47A	—35600	Resistor	100,000 Ohms, ½ W. Insul.
47B	—35600	Resistor	100,000 Ohms, ½ W. Insul.
48	—None		
49A	—35601	Resistor	300,000 Ohms, ½ W. Insul.
49B	—35601	Resistor	300,000 Ohms, ½ W. Insul.
49C	—35601	Resistor	300,000 Ohms, ½ W. Insul.
50	—33334	Resistor	400,000 Ohms, ½ W. Carbon
51A	—36322	Resistor	500,000 Ohms, ½ W. Carbon
51B	—36322	Resistor	500,000 Ohms, ½ W. Carbon
51C	—36322	Resistor	500,000 Ohms, ½ W. Carbon
53	—21454	Resistor	1. Megohm, ½ W. Carbon
54A	W —37933	Resistor	1.0 Ohms, 1 Watt
54B	W —37933	Resistor	1.0 Ohms, 1 Watt
55	W —28873	Resistor	230 Ohms, 2½ W. Flex.
56	None		
57A	W —[illegible]	Resistor	350 Ohms, ½ W. Flex.
57B	W —[illegible]	Resistor	350 Ohms, ½ W. Flex.
57C	W —[illegible]	Resistor	350 Ohms, ½ W. Flex.
58	W —32337	Resistor	20 Ohm., Wire Wound
59Z	W —37955	Resistor	4000 Ohms, Wire Wound
59Y		Resistor	4000 Ohms, Wire Wound
60	W —30960	Resistor	2600 Ohms, 1½ W. Flex.
61	W —27503	Resistor	1400 Ohms, ½ W.
62	W —22160	Resistor	1860 Ohms, 1½ W.
63	W —33013	Resistor	2000 Ohms, 1½ W.
64	W —37987	Resistor	15000 Ohms, 1 W.
65	—21876	Resistor	10,000 Ohms, ½ W.
66A	G54 —36400	Socket	Type 5Z4
66B		Socket	Type 5Z4
67	G152—36400	Socket	Type 6C5
68A	G153—36400	Socket	Type 6F6
68B		Socket	Type 6F6
68C		Socket	Type 6F6
69	G155—36400	Socket	Type 6H6
70A	G151—36400	Socket	Type 6K7
70B		Socket	Type 6K7
71	G150—36400	Socket	Type 6L7
72	—None		
73	—534C14	Speaker	
74	W —37956	Switch	Auto-Expressionator
75Z	C —37957-A	Switch	Band Selector
75Y			
75X			
76	G27—26719	Ter. Board	Ant. and Ground
77Y	—37966	Tone Con. On-off Switch	
77Z			
78	G34—24628	Transformer	Audio
79	G35—24628	Transformer	Bass Compensator
80	G1 —37900	Transformer	60 Cycle, 110 V. Power
81	G2 —37900	Transformer	Universal Power
82	G36—24628	Transformer	Push-pull Output
83	W —37952	Tuning Ind.	Shadow-graph
84X	—37907	Volume Control	1st A. F. Grid
84Y			Driver Grid
85	G100—36400	Socket	Type 6Q7
86	—27090	Resistor	6450 Ohms
87	W —37988	Condenser	.017 Mfd., 200 Volt
88	W —30276	Condenser	.001 Mfd., 400 Volt
89	—27121	Resistor	5,000 Ohms, ½ Watt
90	—34018	Resistor	200,000 Ohms ½ Watt
	—37945	Dial Assem.	Complete
	—40531	Belt	Drive
	—40537	Coupling	Flex. Drive
	C —40195	Face	Celluloid Dial
	C —37958	Face	Glass Dial
	—40496	Pointer	Long
	—40494	Pointer	Short
	—40498	Screw	Pointer Retaining
	B —37898	Lens	Glass
	B —37897	Ring	Lens Retaining
	C —37894	Escutcheon	
	B —37895	Spring	Escutcheon Retaining
	W —37117	Foot	Rubber Mgt.
	W —[illegible]	Cable	Indicator Control
	W —[illegible]	Knob	3 required
	W —40188	Knob	2 required
	W —37909	Pulley	Band Selector Switch
	G3 —37965	Socket	Dial Light Assem.
	G3 —37965	Socket	Indicator Light

©John F. Rider, Publisher

MODEL 1316
Voltage, Trimmers
Socket, Chassis

CROSLEY RADIO CORP.

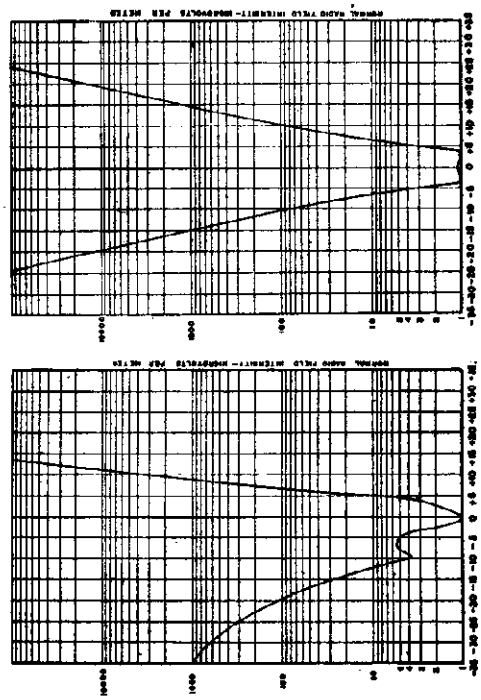

Fig. 5

Fig. 6

TUBE SOCKET VOLTAGE READINGS

Tube	Function	H	P	S	Sa	K	Ga	Gc
6K7	R-F Amplifier	6.3	238	105	2.5	2.5		
6A8	Oscillator-Modulator	6.3	235	105	2.5	2.5	170	-5 to -12
6J7	A. F. C. Control	6.3	170	105	—	4.8	—	—
6K7	Singal I-F Amplifier	6.3	220	100	3.0	3.0	—	—
6K7	AFC AVC I-F Amplifier	6.3	220	100	3.0	3.0	—	—
6H6	AFC Detector	6.3	0	0	—	—	—	—
6R7	Diode 1st A-F Amplifier	6.3	80	—	—	2.0	—	—
6C5	A-F Driver	6.3	220	—	—	6.8	—	—
6N6	(2) Output	6.3	350	240	—	2.6	—	—
5Z4	(2) Rectifier	4.6	—	—	—	348.	—	—

Phantom Conductor Tube — Varies with power output.
Voltage drop across speaker field 108 volts.
Power Output approximately 17 watts.
Power Consumption approximately 130 watts.
All readings taken on 117.5 volt power supply.

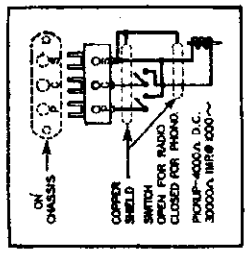

Fig. 7. Phonograph Pickup

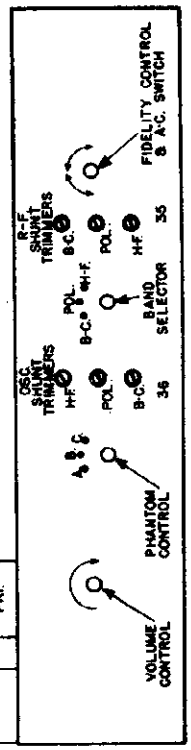

Fig. 4. Front View

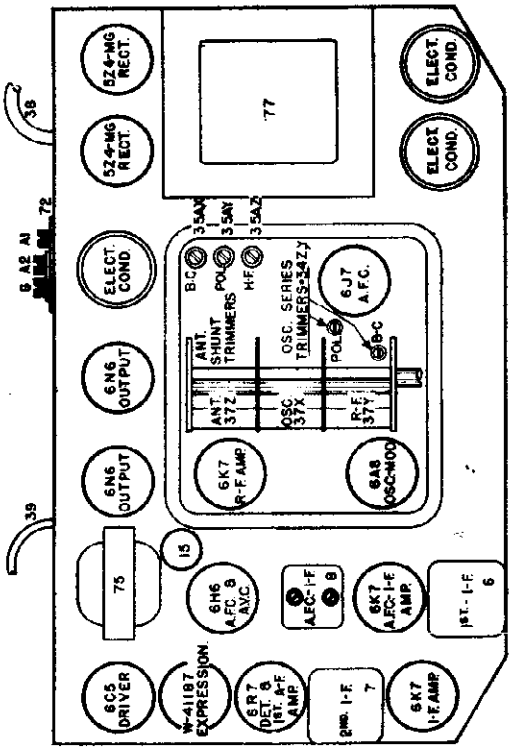

Fig. 2. Top View—1316

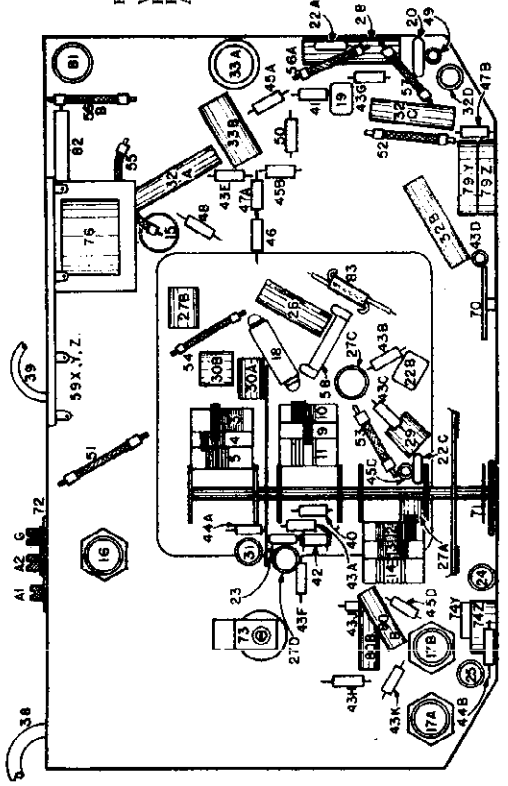

Fig. 3. Bottom View

©John F. Rider, Publisher

CROSLEY RADIO CORP.

MODEL 1316
Schematic

MAY, 1936

450 KC. I-F
MODEL-1316

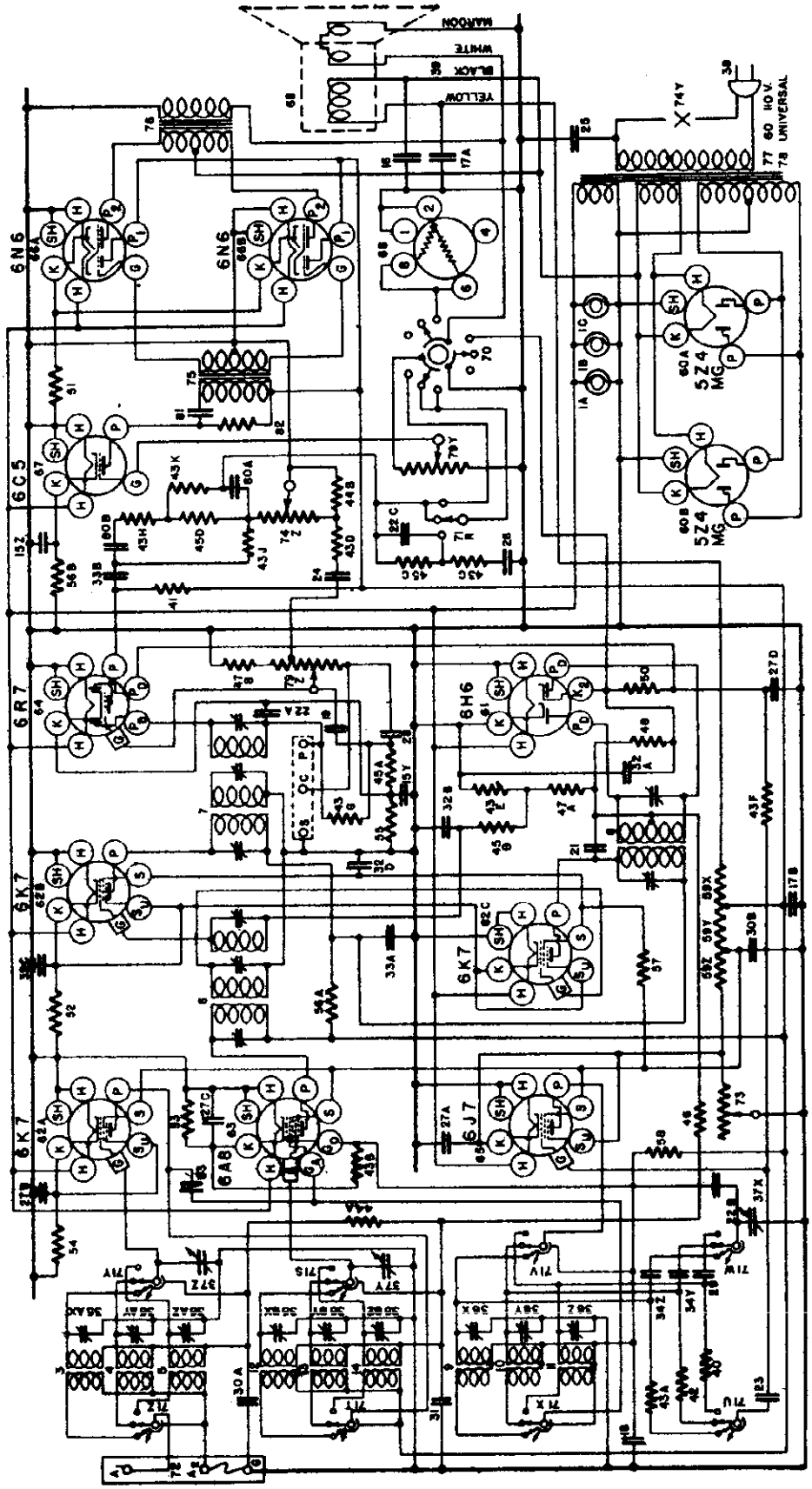

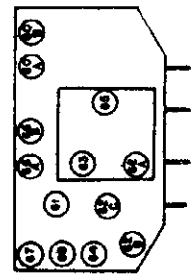

The tubes used are 6K7 R-F Amplifier, 6A8 Oscillator-Modulator, 6J7 A. F. C. Control, 6K7 Signal I-F Amplifier, 6K7 A. F. C. A. V. C. I-F Amplifier, 6H6 A. F. C. Detector, 6R7 Diode 1st A-F Amplifier, 6C5 A-F Driver, two 6N6 Output, two 5Z4 Rectifiers and W-41187 Phantom Conductor tube.

©John F. Rider, Publisher

CROSLEY RADIO CORP.

MODEL 6615
Schematic
Parts

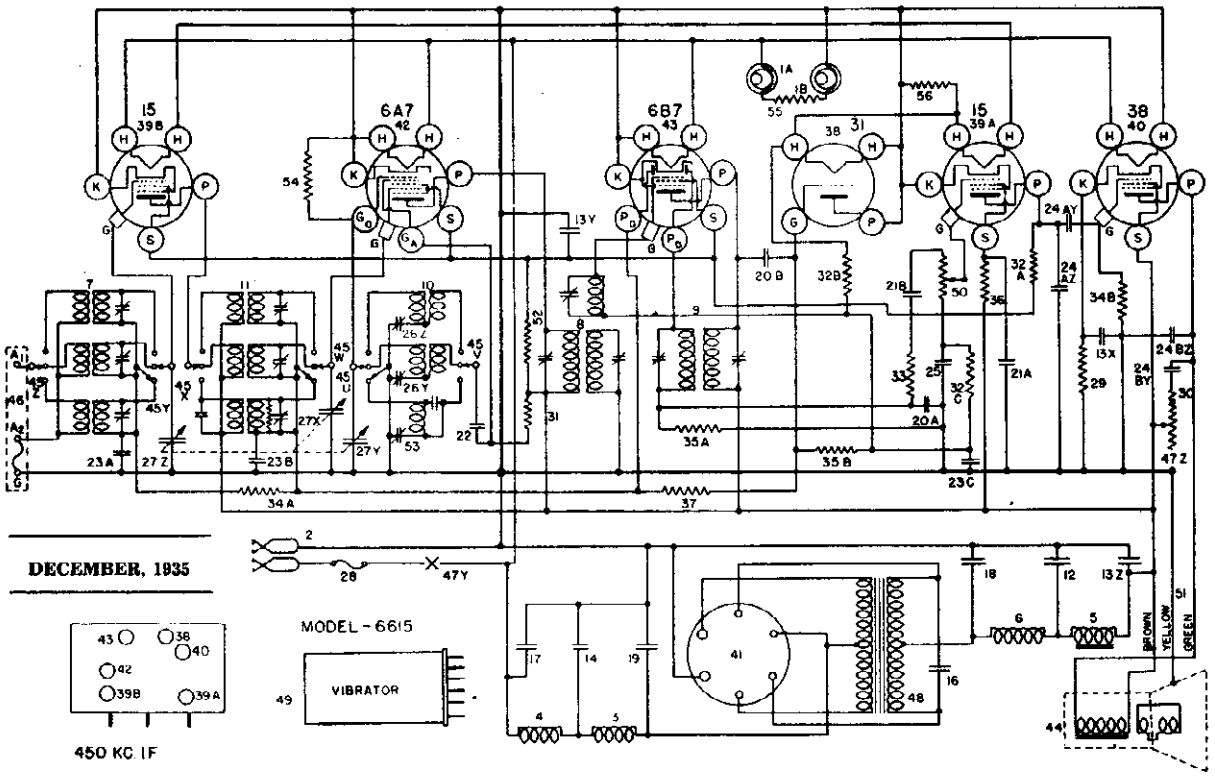

PARTS LIST—MODEL 6615

Figures in first column refer to parts in Diagrams.

Item No.	Part No.	Description
1A	G6 —27134	Dial Light Bracket Assem.
1B	G6 —27134	Dial Light Bracket Assem.
2	MG25—37103	Battery Cable
	—34903	Battery Clip (+)
	—34904	Battery Clip (−)
	W —37231	Battery Cable Clamp
3	MG7—37103	Choke, I.-F., "A" Sup. Filter
4	G10—32977	Choke, H-F., "A" Sup. Filter
5	G27—24628	Choke, L-F., "B" Sup. Filter
6	G2 —24234	Choke, H-F., "B" Sup. Filter
7	G80—32000	Ant. Coil Assem. Complete
	G78—32000	Ant. Coil only, 150 400 Kc.
	G44—32000	Ant. Coil only, 1710-540 Kc.
	G79—32000	Ant. Coil only, 2.3 - 7.5 Mc.
	G12—36031	Coil Shield
	W —35951	3 Section Trimmer Cond.
	W —36033	Trimmer Cond. Bracket
	G6 —36031	Support Base
8	G79—32004	1st. I-F Coil Assem.
9	G78—32004	2nd. I-F. Coil Assem.
10	G84—32002	Osc. Coil Assem. Complete
	G62—32002	Osc. Coil only, 150-400 Kc.
	G69—32002	Osc. Coil only, 1710-540 Kc.
	G63—32002	Osc. Coil only, 2.3 - 7.5 Mc.
	G13—36031	Coil Shield
	W —35951	3 Section Trimmer Cond.
	W —36033	Trimmer Cond. Bracket
	G11—36031	Support Base
	G6 —34002	Condenser, 25 Mmf.
11	G57—32001	R-F. Coil Assm. Complete.
	G55 —32001	R-F. Coil only, 150-400 Kc.
	G59—32001	R-F. Coil only, 1710-540 Kc.
	G56—32001	R-F. Coil only, 2.3 - 7.5 Mc.
	G12—36031	Coil Shield
	W —35951	3 Section Trimmer Cond.
	W —36033	Trimmer Cond. Bracket
	G6 —36031	Support Base
	G1 —34002	Condenser, 0.00025 Mfd.
	G6 —34002	Condenser, 25 Mmf.
	—37590	Resistor, 750,000 Ohms, ½ W.
12	W —36057	Condenser, 40. Mfd., 300 V.
13Z	W —34856	Condenser, 12. Mfd., 250 V.
13Y		Condenser, 8. Mfd., 250 V.
13X		Condenser, 8. Mfd., 25 V.
14	W —32904	Condenser, 20 Mmfd.
15		
16	W —37214	Condenser, 0.001 Mfd., 1000 V.
17	W —37190	Condenser, 0.02 Mfd., 160 V.
18	W —37173	Condenser, 0.25 Mfd., 300 V.
19	W —37174	Condenser, 0.5 Mfd., 160 V.
20A	G2 —34002	Condenser, 100 Mmfd.
20B	G2 —34002	Condenser, 100 Mmfd.
21A	W —23191A	Condenser, 0.01 Mfd., 400 V.
21B	W —23191A	Condenser, 0.01 Mfd., 400 V.
22	W —32378	Condenser, 0.01 Mfd., 400 V.
23A	W —32379	Condenser, 0.02 Mfd., 200 V.
23B	W —32379	Condenser, 0.02 Mfd., 200 V.
23C	W —32379	Condenser, 0.02 Mfd., 200 V.
24AZ	W —25537A	Condenser, 0.001 Mfd., 400 V.
24AY		Condenser, 0.03 Mfd., 400 V.
24BZ	W —25537A	Condenser, 0.001 Mfd., 400 V.
24BY		Condenser, 0.03 Mfd., 400 V.
25	W —30321A	Condenser, 1.0 Mfd., 160 V.

Item No.	Part No.	Description
26Z	G29—33006	Condenser, I.-F., Series Osc. Trimmer
26Y		Condenser, B.C., Series Osc. Trimmer
27Z		
27Y	G33—33002	3 Section Tuning Cond. Gang.
27X		
	MG25—37257	Dial Assm.
	C —37439A	Dial Face
	W —37196	Pointer
	W —32293	Pointer Nut (2)
28	G2 —33839	Fuse Panel
	W —37624	Fuse, 4 Amp.
	W —33310A	Fuse Cover
	W —34223	Cover Insulator
29	W —22514	Resistor, 750 Ohm, ½ W. Flex.
30	—37474	Resistor, 7,000 Ohm, ½ W.
31	—22531	Resistor, 15,000 Ohm, ½ W.
32A	—21875	Resistor, 100,000 Ohm, ½ W.
32B	—21875	Resistor, 100,000 Ohm, ½ W.
32C	—21875	Resistor, 100,000 Ohm, ½ W.
33	—23402	Resistor, 250,000 Ohm, ½ W.
34A	—23785	Resistor, 500,000 Ohm, ½ W.
34B	—23785	Resistor, 500,000 Ohm, ½ W.
35A	—21454	Resistor, 1.0 Megohm, ½ W.
35B	—21454	Resistor, 1.0 Megohm, ½ W.
36	—34883	Resistor, 2.0 Megohm, ½ W.
37	—26577	Resistor, 3.0 Megohm, ½ W.
38	G14—28807	Socket, "31"
39A	G88—28807	Socket, "15"
40	G15—28807	Socket, "38"
41	G92—28807	Socket, "47B"
42	G47 —28807	Socket, "6A7"
43	G48—28807	Socket, "6B7"
	W —35772	Tube Shield (Half), (6)
	W —35773	Tube Shield Cap, (3)
	W —35774	Tube Shield Base, (3)
44	33—MS—2	Speaker
	43—MS—3	Speaker (Console)
45Z		
to	MG38—37257	Band Change Switch
45U		
46	G27—26719	Terminal Board, Ant. and Grnd.
47Z	—36062	Tone Control
47Y		On-Off Switch
48	G7 —32769	Power Transformer
	MG19—37257	Power Transformer Can.
	W —32920A	Power Transformer Can. Cover
49	W —37216	Vibrator
	W —37225	Vibrator Cover, (Shield)
	W —33312A	Vibrator Sleeve, (Rubber)
50	—36060	Volume Control
51	W —35111	Speaker Cable
52	—37465	Resistor, 15,000 Ohm, ½ W.
53	G12—33005	Condenser, I.-F., Series Osc.
54	—37472	Resistor, 50,000 Ohm, ½ W
55	W —37631	Resistor, 32.0 Ohm, ½ W. Flex.
56	W —37630	Resistor, 21.0 Ohm, 1 W. Flex.
	MG9—37257	Syncronode Partition Assem.
	W —37227	Syncronode Cover
	W —37490	Transformer Shield
	B —33528	Escutcheon
	W —32984	Escutcheon Gasket
	D — 28	Escutcheon Screws (4)
	W —37340	Knob (Band Change)
	W 37339	Knob (3)

©John F. Rider, Publisher

©John F. Rider, Publisher

SPECIFICATIONS

The Crosley Model 6615 radio is a six-tube superheterodyne receiver designed for operation from a six-volt storage battery. It contains a completely shielded, built-in power supply unit which employs a self-rectifying type vibrator.

It is a three band receiver and the dial is divided into three sections as follows:

ORANGE— 150- 400 kilocycles (Weather Band)
BLACK — 540-1700 kilocycles (American Broadcast Band)
GREEN —2350-7300 kilocycles (High Frequency Band)

TUBES AND VOLTAGE LIMITS

The following table gives the functions of the tubes used, together with the voltage readings between the tube socket contacts and the chassis. Voltage readings should be taken with a 1000 ohm per volt, 250 volt voltmeter (except filaments) with the volume control full on and no signal input. The filament voltages should be measured with an accurate low range D-C voltmeter (approximately 0 to 10 volts). Voltage limits may vary plus or minus 10% of values given.

TUBE SOCKET VOLTAGE READINGS

Tube	Function	H	P	S	G	K	Ga	Go
15	R-F Amplifier	2.0	150	85	-2	0	—	—
6A7	Osc.-Modulator	5.8	150	85	-2	0	120	-5 to -15
6B7	I-F Amp. & Detector	5.8	150	85	-2	0	—	—
15	A-F Amplifier	2.0	70	15	-2	0	—	—
38	Output	5.8	145	150	0	12	—	—
31	AVC Diode	2.0	—	—	—	—	—	—

"A" Battery Drain Approximately 2.5 Amperes. Power Output Approximately .9 Watt.

ALIGNMENT PROCEDURE

All the circuits in this receiver are very accurately adjusted at the factory and normally should need no further adjustment. However, if it is definitely known that an adjustment is necessary the circuits can be properly aligned ONLY with the use of a modulated signal generator and an output meter.

CONNECTING OUTPUT METER

Connect one terminal of the output meter to the plate and the other terminal to the screen of the 38 Output tube. Be sure the meter is protected from D.C. by connecting a condenser (.1 mfd. or larger—not electrolytic) in series with one of the leads.

1. Tuning I-F Amplifier To 450 Kilocycles.

(a) Connect the output of the signal generator through a .02 mfd. condenser to the top cap of the 6A7 tube, leaving the tube's grid clip in place. Connect the ground lead from the signal generator to the "GND" terminal of the receiver. KEEP THE GENERATOR OUTPUT LEAD AS FAR AS POSSIBLE FROM THE GRID LEADS OF THE OTHER SCREEN GRID TUBES.

(b) Set the station selector so that the tuning condenser plates are completely out of mesh. Turn the volume control knob to the right (ON) and turn the tone control knob to the left (TREBLE).

(c) Turn the band selector switch all the way to the left (High Frequency Band).

(d) Set the signal generator to 450 kilocycles.

(e) Close the middle trimmer condenser (SEC) on the 1st I-F transformer. (Fig. 2).

(f) Adjust the trimmers located on top of the 2nd I-F transformer for maximum output.

(g) Adjust the top and bottom trimmers (TERT and PRI) of the 1st I-F transformer for maximum output.

(h) Repeat operations (f) and (g) for more accurate adjustments.

ALWAYS USE THE LOWEST SIGNAL GENERATOR OUTPUT THAT WILL GIVE A REASONABLE OUTPUT METER READING.

(i). Reduce the output of the signal generator and adjust the middle trimmer on the 1st I-F transformer for maximum output. DO NOT READJUST THE OTHER TRIMMERS.

2. Aligning R-F Amplifier.

When aligning the R-F amplifier the output lead from the signal generator is connected to the antenna ("A-1") terminal of the receiver through a .00025 mfd. condenser.

Each band should first be shunt aligned and then series aligned. The band selector switch should be set for the band being aligned and the signal generator should be set to the frequency indicated for each adjustment.

Adjust the "OSC", "R-F" and "ANT" shunt trimmers in the order given for maximum output. Tune the station selector to the signal generator for maximum output and then check the adjustments of the "R-F" and "ANT" trimmers in the order given. Do not readjust the "OSC" trimmer. NOTE: When aligning the High Frequency Band care must be exercised so that the circuits will be aligned on the fundamental frequency rather than on the image frequency which is approximately 900 kilocycles less than the fundamental. To check on this, increase the output of the signal generator approximately ten times and try to tune-in the signal both at the generator frequency as indicated on the station selector dial and at approximately 900 kilocycles below the Correct frequency. If the circuits have been properly aligned the signal can be tuned-in at both positions but much stronger at the correct position.

To adjust the "series" trimmers (Illus. Nos. 53 top view, 26Z and 26Y side view, Fig. 2) set the signal generator to the frequency indicated and then tune-in this signal with the station selector for maximum output. Adjust the "series" trimmer while rocking the tuning condenser back and forth slightly, until no further improvement in output can be obtained.

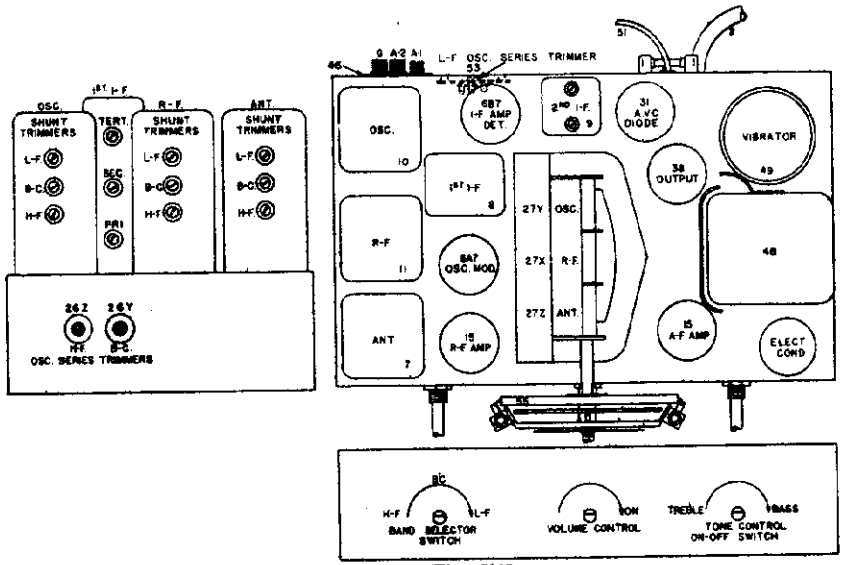

Fig. 2. Top View 6615

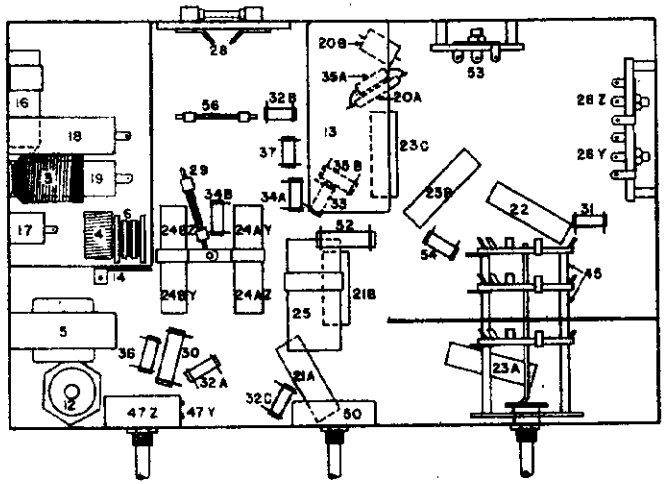

Fig. 3. Bottom View

SIGNAL INPUT FREQUENCIES

	Shunt Alignment	Series Alignment
Weather Band (ORANGE)	400 Kc.	150 Kc.
American Broadcast Band (BLACK)	1400 Kc.	600 Kc.
High Frequency Band (GREEN)	6000 Kc.	2500 Kc.

MODEL 66
Schematic

CROSLEY RADIO CORP.

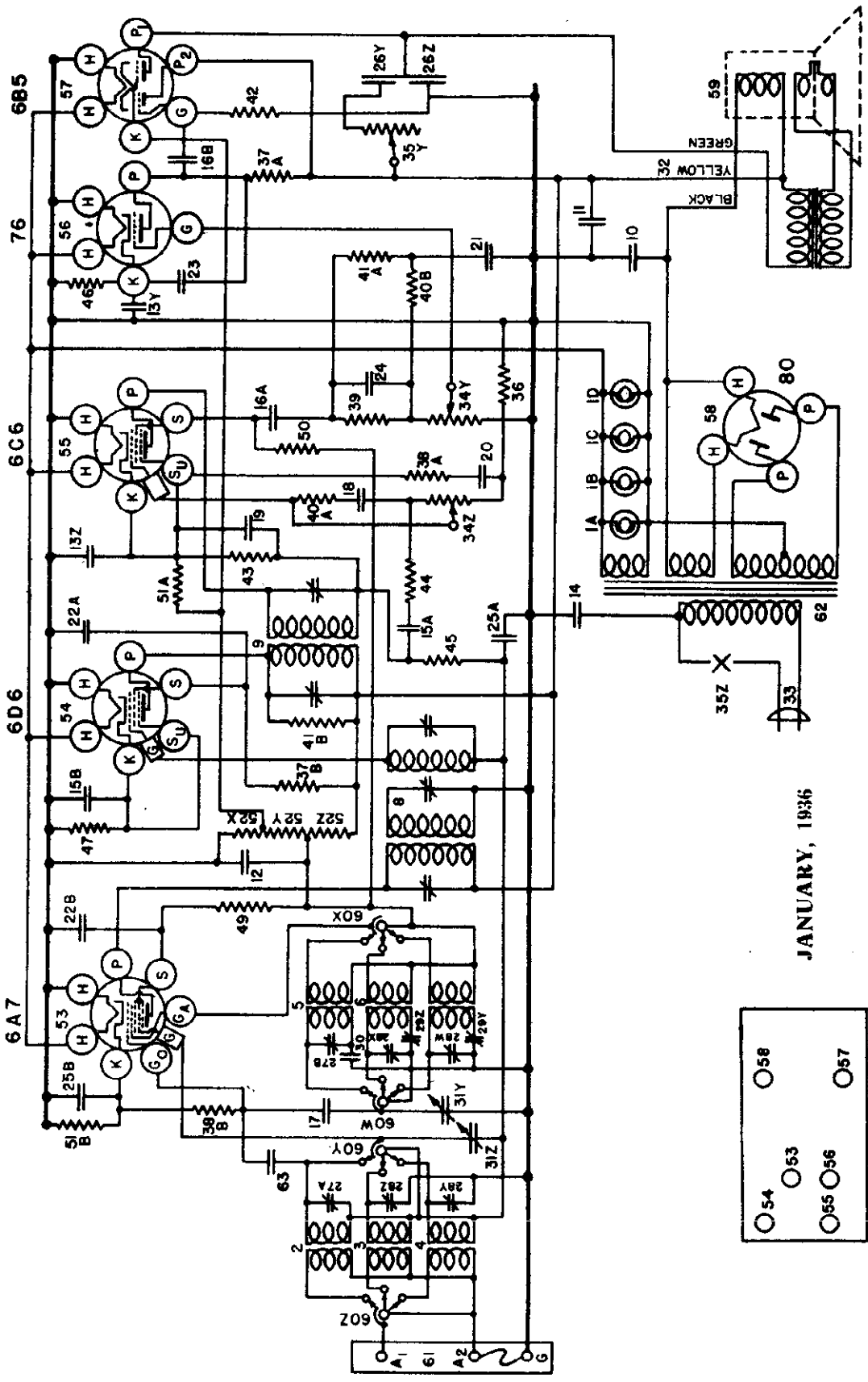

©John F. Rider, Publisher

MODEL 6625
Socket, Chassis
Trimmers, Parts
Alignment, Voltage

CROSLEY RADIO CORP.

ALIGNMENT PROCEDURE

All the circuits in this receiver are very accurately adjusted at the factory and normally should need no further adjustment. If it is definitely known that readjustment is necessary the circuits may be most accurately aligned with the aid of an oscilloscope. However, if an oscilloscope is not available a good alignment may be obtained by means of a signal generator and an output meter provided the following procedure is carefully observed.

CONNECTING OUTPUT METER

Connect the two terminals of the output meter to the two plates of the 6B5 Output tube. Be sure the meter is protected from D.C. by connecting a condenser (.1 mfd. or larger—not electrolytic) in series with one of the leads.

Tuning I-F Amplifier to 450 Kilocycles.

(a) Connect the output of the signal generator through a .02 mfd. condenser to the top cap of the 6D6 I-F Amplifier tube, leaving the tube's grid clip in place. Connect the ground lead from the signal generator to the receiver chassis. KEEP THE GENERATOR OUTPUT LEAD AS FAR AS POSSIBLE FROM THE GRID LEADS OF THE OTHER SCREEN GRID TUBES.

(b) Turn the band selector switch to the Broadcast Band and rotate the station selector to approximately 60 on the dial. Turn the volume knob to the right (ON) and turn the tone control knob to the left (TREBLE).

(c) Set the signal generator to 450 kilocycles.

(d) Adjust the trimmer condensers located on top of the 2nd. I-F transformer for maximum output (Fig. 2.)

ALWAYS USE THE LOWEST SIGNAL GENERATOR OUTPUT THAT WILL GIVE A REASONABLE OUTPUT METER READING.

(e) Transfer the output lead of the signal generator from the 6D6 tube to the top cap of the 6A7 Oscillator-Modulator tube, leaving the tube's grid clip in place.

(f) Close the middle trimmer (Tert. Fig. 4) on the 1st I-F transformer so that it is moderately tight. (Do not force adjusting screw).

(g) Adjust the top trimmer on the 1st. I-F transformer for maximum output.

(h) Adjust the bottom trimmer on the 1st. I-F transformer for maximum output.

(i) Transfer the signal generator output lead from the 6A7 tube to the "ANT" terminal of the receiver and increase the output of the signal generator if necessary.

(j) Check the adjustment of the bottom trimmer of the 1st. I-F transformer. DO NOT READJUST THE TOP TRIMMER.

(k) Adjust the middle trimmer of the 1st. I-F transformer by opening condenser until maximum output is obtained. DO NOT READJUST THE TOP AND BOTTOM TRIMMERS.

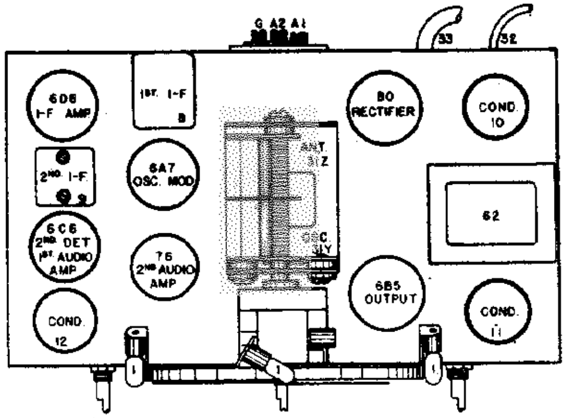

Fig. 2. Top View

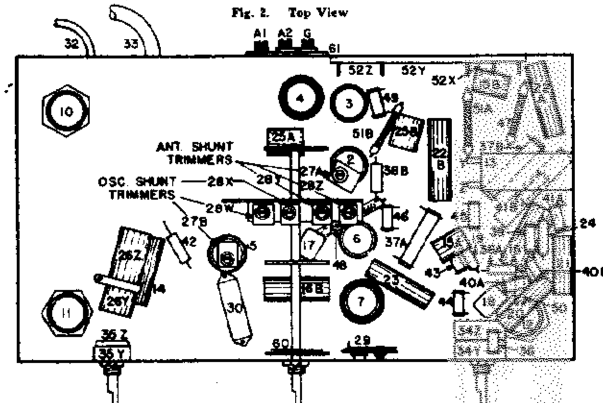

Fig. 3. Bottom View

Aligning R-F Amplifier

When aligning the R-F Amplifier the output lead of the signal generator is connected to the "ANT" terminal of the receiver. For the BLUE and RED bands a .00025 mfd. condenser must be connected in series with the output lead of the signal generator and for the high-frequency band a 400 ohm carbon resistor should be used in place of the condenser.

Each band should first be shunt aligned and then series aligned, where provision is made for series alignment (BLUE and RED bands). The band selector switch should be set for the band being aligned and the station selector and signal generator should be set to the frequency indicated (c) for each adjustment.

(a) Adjust the "OSC" and "ANT" shunt trimmers in the order given for maximum output. Readjust the station selector slightly so that the generator signal is tuned-in with maximum output and then check the adjustments of the "ANT" trimmers. DO NOT READJUST THE "OSC" TRIMMER

NOTE: When shunt aligning the RED and GREEN bands care must be exercised so that the circuits will be aligned on the correct frequency rather than on the image frequency which is approximately 900 kilocycles less than the fundamental. To check on this, increase the output of the signal generator ten times or more and try to tune-in the signal both at the generator frequency as indicated on the station selector dial and at approximately 900 kilocycles less than the correct frequency. If the circuits have been properly aligned the signal can be tuned-in at both positions but much stronger at the correct position.

(b) To align the series trimmers (29Y-29Z Fig. 1) set the signal generator to the frequency indicated (c) and then tune in this signal with the station selector for maximum output. To obtain the best adjustment for each series trimmer it will be necessary to rotate the station selector back and forth slightly while adjusting the trimmer for maximum output.

(c) Signal Input Frequencies:

	Shunt Alignment	Series Alignment
American Broadcast Band (BLUE)	1700 Kilocycles	600 Kilocycles
Police Band (RED)	6000 Kilocycles	2500 Kilocycles
High-Frequency Band (GREEN)	18000 Kilocycles	....

PARTS LIST—MODEL 6625

Figures in first column refer to parts in Diagrams.

Item	Part No.	Name Description
1A	W—37922	Bulb, Dial Light
1B	W—37922	Bulb, Dial Light
1C	W—37922	Bulb, Dial Light
1D	W—37922	Bulb, Indicator Light
2	G92—32000	Coil, Ant. 6000-18000 Kc.
3	G90—32000	Coil, Ant. 1800-6000 Kc.
4	G91—32000	Coil, Ant. 540-1800 Kc.
5	G84—32002	Coil, Osc. 6000-18000 Kc.
6	G83—32002	Coil, Osc. 1800-6000 Kc.
7	G82—32002	Coil, Osc. 540-1800 Kc.
8	G94—32004	Coil, 1st I-F Assm.
9	G93—32004	Coil, 2nd I-F Assm.
10	W—36055	Condenser 35 mfd. 400 V.
11	W—36057	Condenser 40 mfd. 300 V.
12	W—40325	Condenser 50 mfd. 150 V.
13Z	W—37778	Condenser 12 mfd. 25 V.
13Y		Condenser 12 mfd. 25 V.
14	W—30905	Condenser .01 mfd. 400 V.
15A	W—36541	Condenser .02 mfd. 160 V.
15B	W—36541	Condenser .02 mfd. 160 V.
16A	W—32780B	Condenser .05 mfd. 400 V.
16B	W—32780B	Condenser .05 mfd. 400 V.
17	G1—34002	Condenser, .00025 mfd. (molded)
18	G6—34002	Condenser, .000025 mfd. (molded)
19	G2—34002	Condenser, .0001 mfd. (molded)
20	W—30323	Condenser, .01 mfd. 200 V.
21	W—37938	Condenser, .017 mfd. 200 V.
22A	W—23142	Condenser .02 mfd. 400 V.
22B		Condenser .02 mfd. 400 V.
23	W—27540	Condenser, .0005 mfd. 400 V.
24	G5—34002	Condenser, .00005 mfd. (molded)
25A	W—35936	Condenser, .05 mfd. 200 V.
25B	W—35936	Condenser, .05 mfd. 200 V.
26Z	W—31052	Condenser, .004 mfd. 400 V.
26Y		Condenser, .05 mfd. 400 V.
27A	W—37954	Condenser H-F Ant Shunt Trim
27B	W—37951	Condenser, H-F Ant Shunt Trim.
28Z	W—37822A	Condenser, Pol Ant Shunt Trim.
28Y		Condenser, B-C Ant Shunt Trim.
28X		Condenser, Pol Osc Shunt Trim
28W		Condenser, B-C Osc. Shunt Trim
29Z	G31—33005	Condenser, Pol Osc. Series Trim.
29Y		Condenser, B-C Osc. Series Trim.
30	G37—34000	Condenser, .0053 mfd. H-F Osc.
31Z	G19—33001	Condenser, Var. Tuning Gang
31Y		
32	G4—35606	Cable, Speaker
33	B—33906A	Cable & Plug, Power Supply
34Z	37907	Vol. Cont., 1st A-F Control, 3 Meg.
34Y		2nd A-F Control, 1 Meg
35Y	—37908	Control, Tone
35Z		Switch, On-Off
36	—2,455	Resistor, 300,000 Ohm, ¼ W.
37A	—5469A	Resistor, 100,000 Ohm, 1 W.
27B	—5469A	Resistor, 100,000 Ohm, 1 W.

Item	Part No.	Name Description
38A	—36761	Resistor 40,000 Ohm, ¼ W., Insul.
38B	—36761	Resistor 40,000 Ohm, ¼ W., Insul
39	—21464	Resistor, 1 Megohm, ¼ W.
40A	—34020	Resistor 250,000 Ohm, ¼ W
40B	—34020	Resistor 250,000 Ohm, ¼ W
41A	[illegible]	Resistor [illegible] Ohm, ¼ W
41B	[illegible]	Resistor [illegible] Ohm, ¼ W
42	[illegible]	Resistor [illegible] Ohm, ¼ W
43	[illegible]	Resistor [illegible] Ohm, ¼ W
44	[illegible]	Resistor [illegible] Ohm, ¼ W
45	[illegible]	Resistor [illegible], ¼ W
46	[illegible]	Resistor [illegible] Ohm, ¼ W
47	W—[illegible]	Resistor, 750 Ohm, ½ W., Flex
48	W—[illegible]	Resistor, 80 Ohm, ½ W., Flex
49	[illegible]	Resistor, 15,000 Ohm, ¼ W
50	[illegible]	Resistor, 100,000 Ohm, ¼ W
51A	W—[illegible]	Resistor, 500 Ohm, 2 W. Flex.
51B	W—[illegible]	Resistor, 500 Ohm, ½ W. Flex.
52Z	37829	Resistor, 10,000 Ohm — Candohm
52Y		Resistor, 25,000 Ohm — Candohm
52X		Resistor, 85 Ohm — Candohm
53	G47—28807	Socket 6A7 Type
54	G75—28807	Socket 6D6 Type
55	G74—28807	Socket 6C6 Type
56	G30—28807	Socket, 76 Type
57	G30—28807	Socket 6B5 Type
58	G8—28807	Socket, 80 Type
59	B—37916	Speaker, Spec. 532-BJ-3
60	B—37906	Switch, 2 Sec. Band Selector
61	G27—28719	Terminal Board, Ant. & Grnd
62	G15—28500	Transformer, Power 110-60 Cy.
	G16—28500	Transformer, Power 110-25 Cy.
	G17—28590	Transformer, Power 220-25 Cy.
	W—35774	Base, Tube Shield
	—40531	Belt, Drive
	W—22334	Cable, Indicator Control
	W—35773	Cap, Tube Shield
	—40537	Coupling, Flexible Drive
	—37947	Dial Assy. Complete
	W—40545	Diffuser, Light
	C—37894	Escutcheon, Cabinet
	C—37969	Face, Celluloid Dial
	C—37968	Face, Glass Dial
	W—40365	Gasket, Escutcheon Felt
	—40485	Hand, Long
	—40484	Hand, Short
	W—37339	Knob, 3 required
	W—40192	Knob, 1 required
	B—37898	Lens, Dial
	W—37909	Pulley, Indicator Cable
	W—35772	Shield, Tube (Half)
	W—37814	Shield, Dial Light
	G2—37965	Socket, Dial Light
	G3—37965	Socket, Indicator Light
	B—37896	Spring, Escutcheon Retaining
	B—37897	Spring, Dial Lens Retaining

TUBE SOCKET VOLTAGE READINGS

Tube	Function	H	P	P2	S*	Su	G	K	Go	Ga
6A7	Osc.-Modulator	6.3	285	—	100	—	0	5.0	0	140
6D6	I-F Amplifier	6.3	285	—	120	6.2	0	6.2	—	—
6C6	Det. & A-F Amplifier	6.3	0	—	75	2.6	0	2.6	—	—
76	2nd. A-F Amplifier	6.3	140	—	—	—	0	10.0	—	—
6B5	Output	6.3	270	255	—	—	0	2.3	—	—
80	Rectifier	4.9	350	—	—	—	—	—	—	—

MEASURED ON 117.5 VOLT—60 CYCLE POWER SUPPLY.
POWER CONSUMPTION APPROXIMATELY 80 WATTS.
POWER OUTPUT APPROXIMATELY 3 WATTS.

SPECIFICATIONS

The Crosley Model 6625 radio is a six-tube superheterodyne receiver designed to operate on an ALTERNATING CURRENT power supply. It is available with either of the following types of power transformers: 110 volt—60 cycles, 110 volts 25 cycles or 220 volts 25 cycles.

The tubes used are 6A7 Oscillator-Modulator, 6D6 I-F Amplifier, 6C6 Detector and A-F Amplifier, 76 2nd A-F Amplifier, 6B5 Output and type 80 Rectifier.

It is a three band receiver and the dial is divided into three sections as follows:

BLUE 540- 1800 Kilocycles (American Broadcast Band)
RED 1800- 6000 Kilocycles (Police and Amateurs)
GREEN 5800-18500 Kilocycles (High Frequency Band)

SHUNT TRIMMERS

	Ant.	Osc.	
High-Frequency	27A	27B	High-Frequency
Police	28Z	28X	Police
Broadcast	28Y	28W	Broadcast

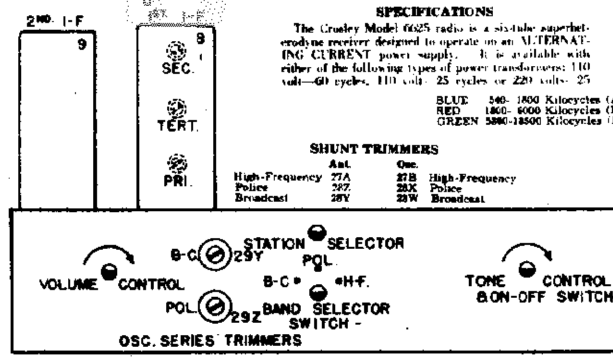

Fig. 4. Front View

SOCKET VOLTAGES

The tube socket voltages are measured from the tube socket contacts to the chassis with a 1000 ohm per volt, 500 volt D.C. voltmeter (except filaments) with the receiver in operating condition and no signal input. The filament voltages should be measured with an accurate low range A-C voltmeter (Approximately 0-10 volts). Readings may vary plus or minus 10% of values given.

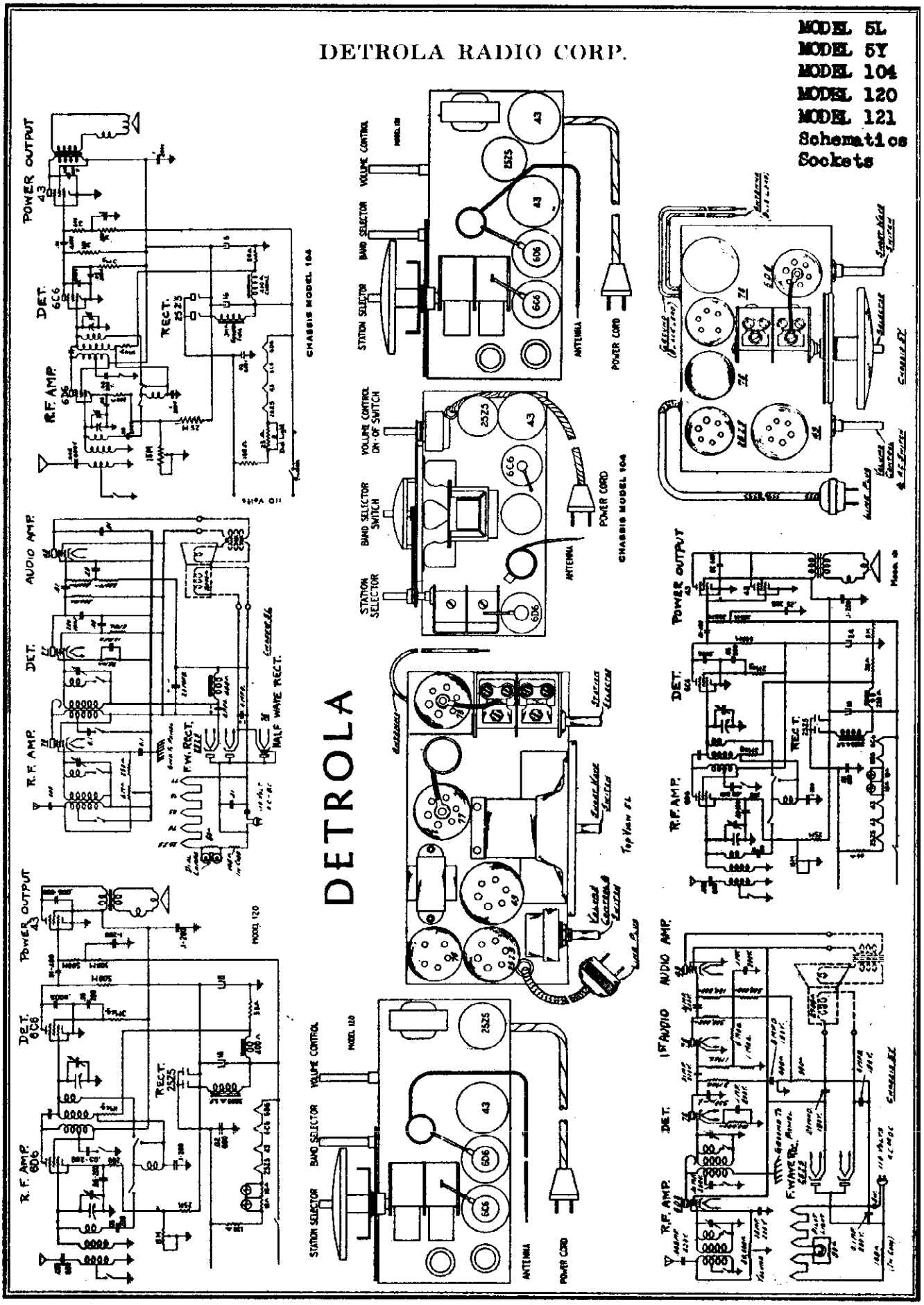

©John F. Rider, Publisher

MODEL G 62M
Schematic

DETROLA RADIO CORP.

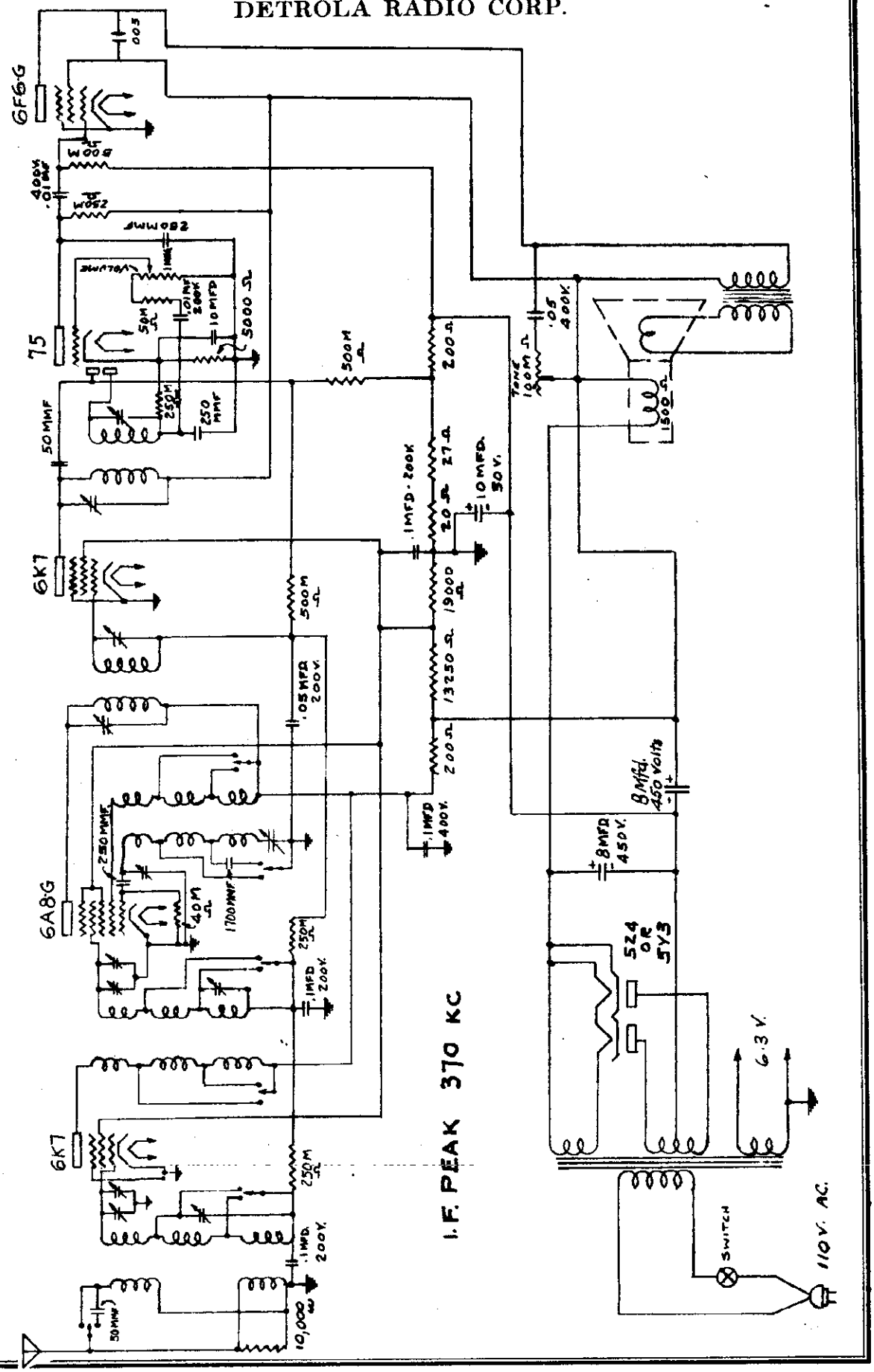

©John F. Rider, Publisher

DETROLA RADIO CORP.

MODEL 7ZM
Schematic

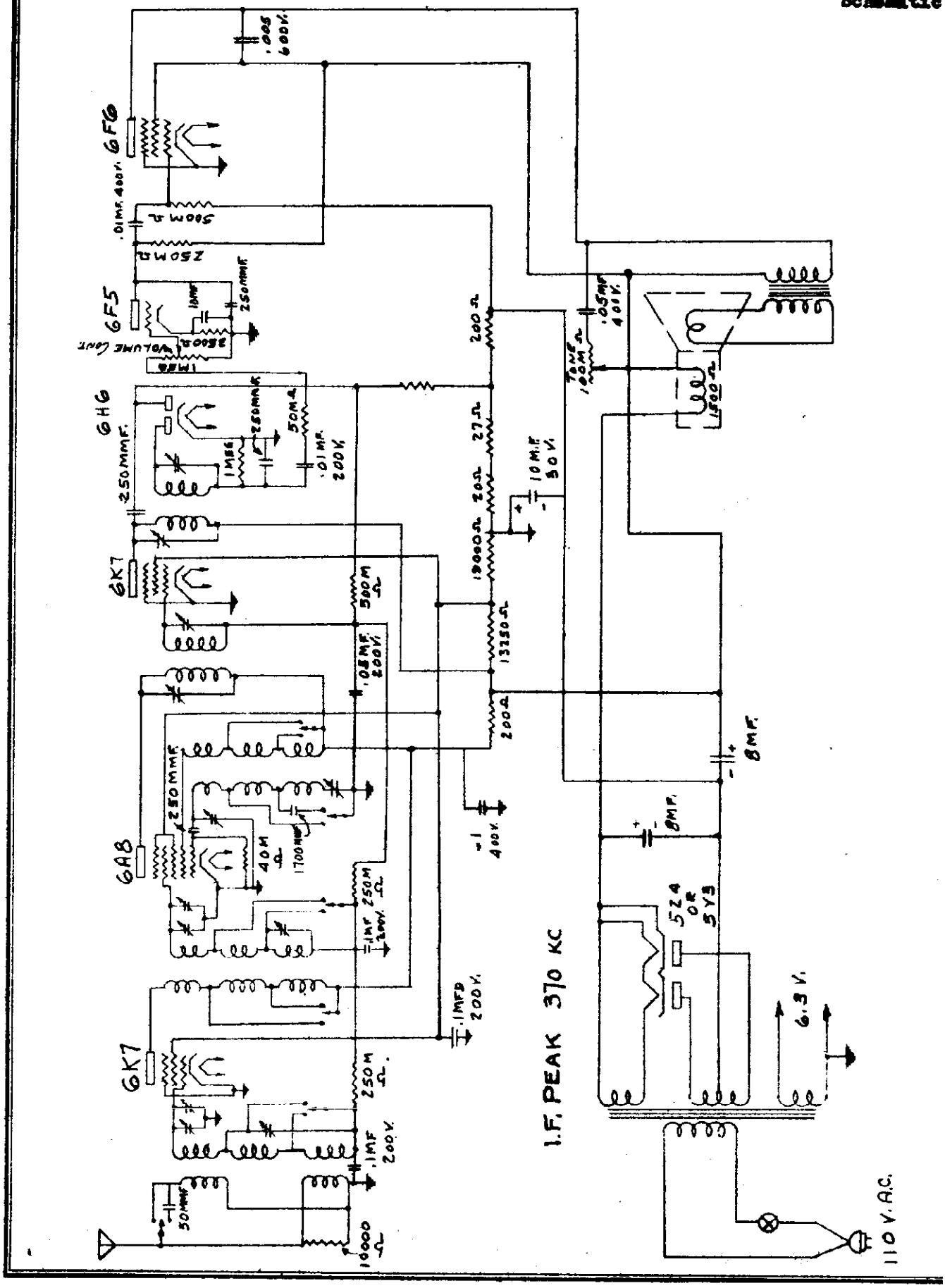

©John F. Rider, Publisher

MODEL 10ZM
Schematic

DETROLA RADIO CORP.

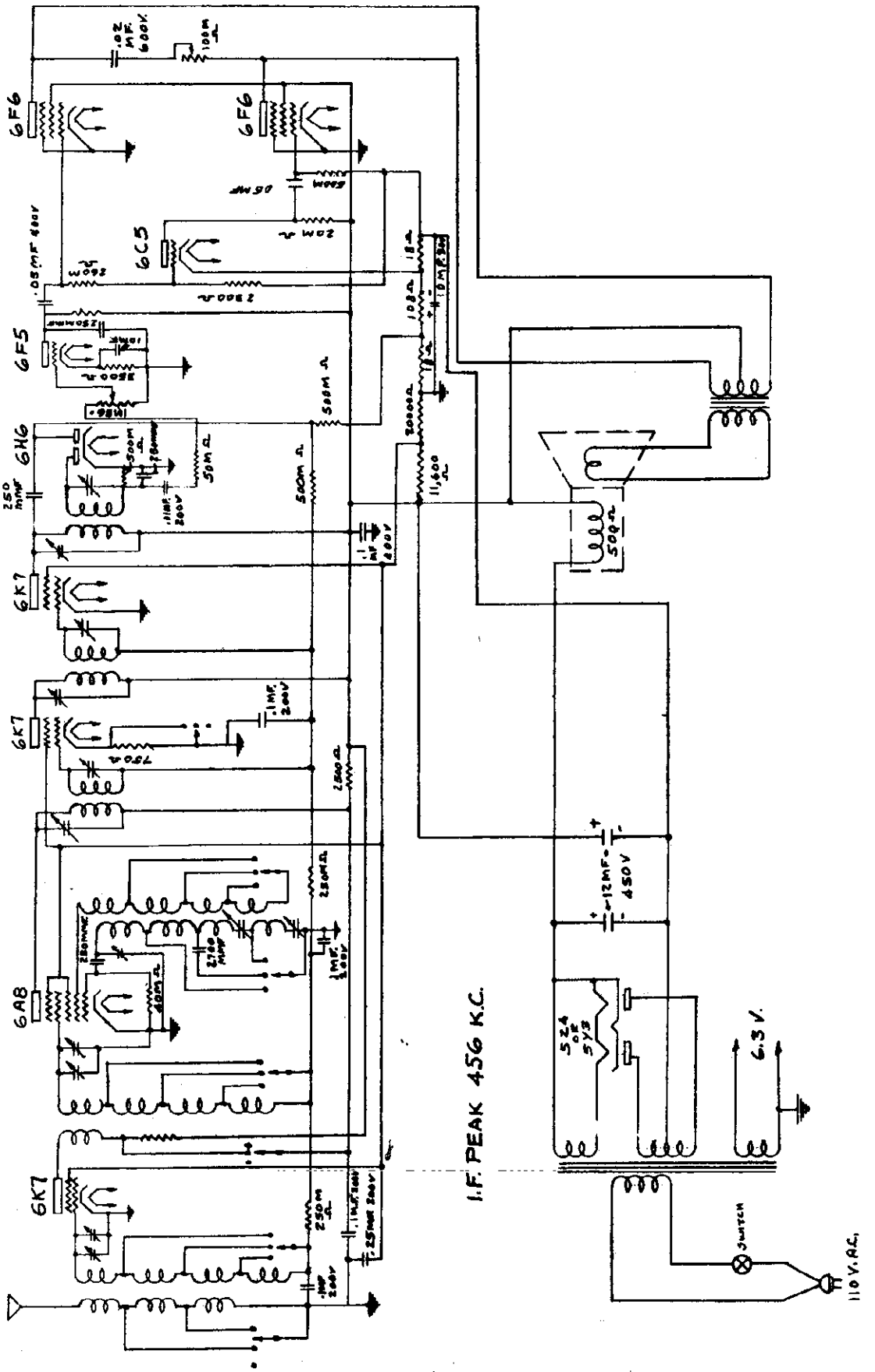

© John F. Rider, Publisher

DETROLA RADIO CORP.

INSTRUCTIONS FOR R-F. AND I-F. ALIGNMENT OF 6ZM AND 7ZM RECEIVERS

R-F. and I-F. Alignment

The trimmers on the tuning condensers and the intermediate stages are very accurately adjusted before the receiver leaves the factory, and should need little or no attentio To check adjustments, the following procedure should be followed:

Set wave band switch in broadcast position and turn volume control to extreme right (full on). Adjust test oscillator to 370 kc. and couple to control grid of 6A8G tube. Adjust four trimmers located in top of i-f. units for maximum output.

R-F. Alignment

1. Couple oscillator to antenna terminal, leaving band switch in broadcast position; set dial pointer and test oscillator to 1400 kc.; adjust oscillator trimmer located on top of tuning condenser for maximum output.
2. Turn band switch to "F" band and set dial pointer and test oscillator to 15 mc. Adjust antenna and r-f. trimmers located on top of tuning condenser for maximum output.
3. Reset band switch to broadcast position and set dial pointer and test oscillator to 140 kc.; adjust antenna and r-f. trimmers located on top of antenna and r-f. coils for maximum output.
4. Set dial pointer and test oscillator to 600 kc. Adjust padding condenser located in bottom of chassis, near 6A8G tube socket, for maximum output. Reset dial pointer and test oscillator to 1400 kc. and readjust oscillator trimmer located on top of tuning condenser for maximum output. This completes all adjustments.

INSTRUCTIONS FOR R-F. AND I-F. ALIGNMENT OF 10ZM RECEIVER

R-F. and I-F. Alignment

The trimmers on the tuning condenser and intermediate stages are very accurately adjusted before the receiver leaves the factory, and should need little or no attention. To check and adjust, the following procedure should be followed:

Set wave band switch in broadcast position and turn volume control to extreme right (full on); adjust test oscillator to 456 kc. and couple to control grid of 6A8G tube; adjust six trimmers located in top of i-f. units for maximum output.

R-F. Alignment

1. Couple oscillator to antenna terminal, leaving band switch in broadcast position. Set dial pointer and test oscillator to 1400 kc.; adjust oscillator trimmer on top of tuning condenser for maximum output.
2. Turn band switch to "F" band and set dial and test oscillator to 15 mc. Adjust antenna on r-f. trimmer located on top of tuning condenser for maximum output.
3. Reset band switch to broadcast position and set dial pointer and test oscillator to 600 kc.; adjust padding condenser located near long wave oscillator coil for maximum output. Rock tuning condenser back and forth slowly when making this adjustment.
4. Reset dial pointer and test oscillator to 1400 kc. and readjust oscillator trimmer on top of tuning condenser for maximum output.
5. Turn band switch to "1" band and set dial pointer and test oscillator to 160 kc. Adjust long wave padding condenser located near oscillator coil shield for maximum output. Rock tuning condenser back and forth slowly when making this adjustment. This completes all necessary adjustments.

© John F. Rider, Publisher

MODEL 100
MODEL 106
Schematics
Sockets

DETROLA RADIO CORP.

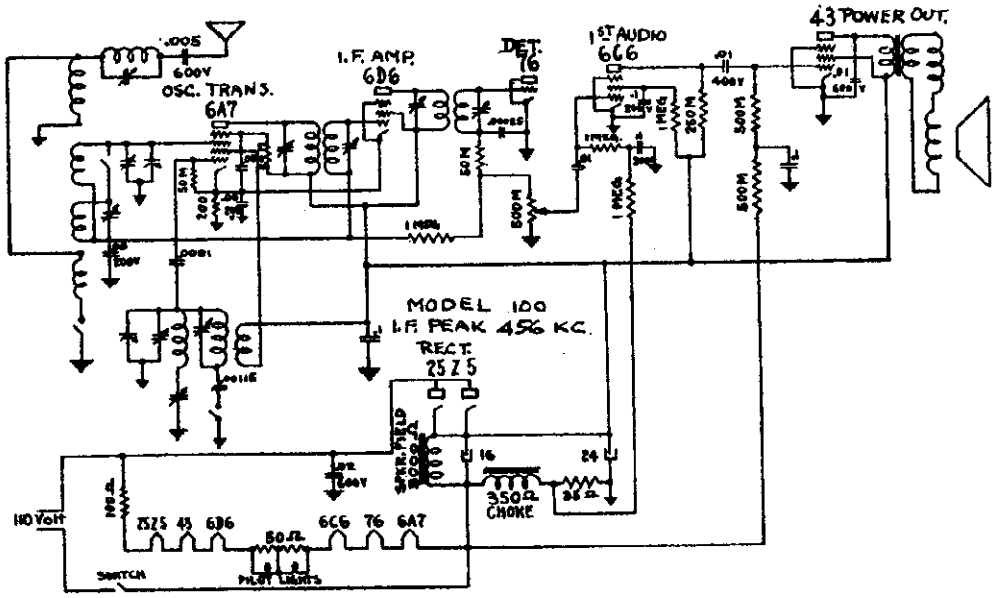

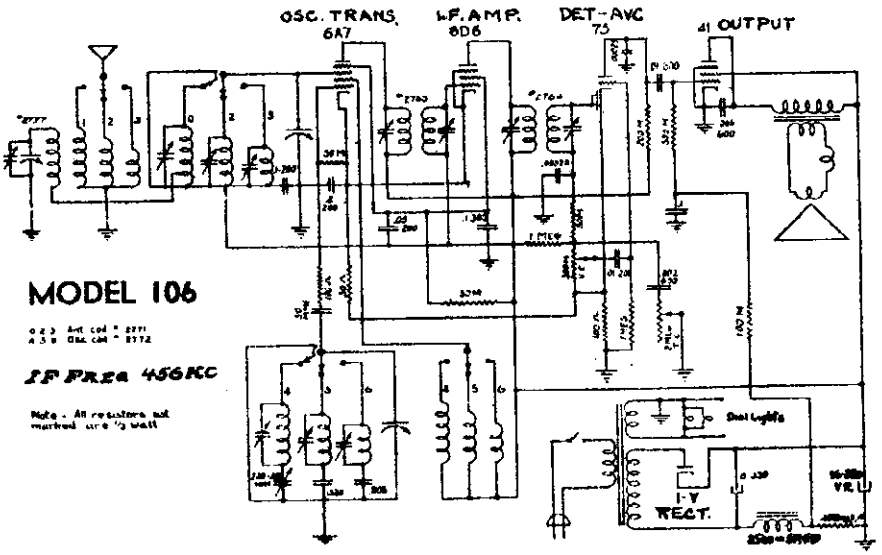

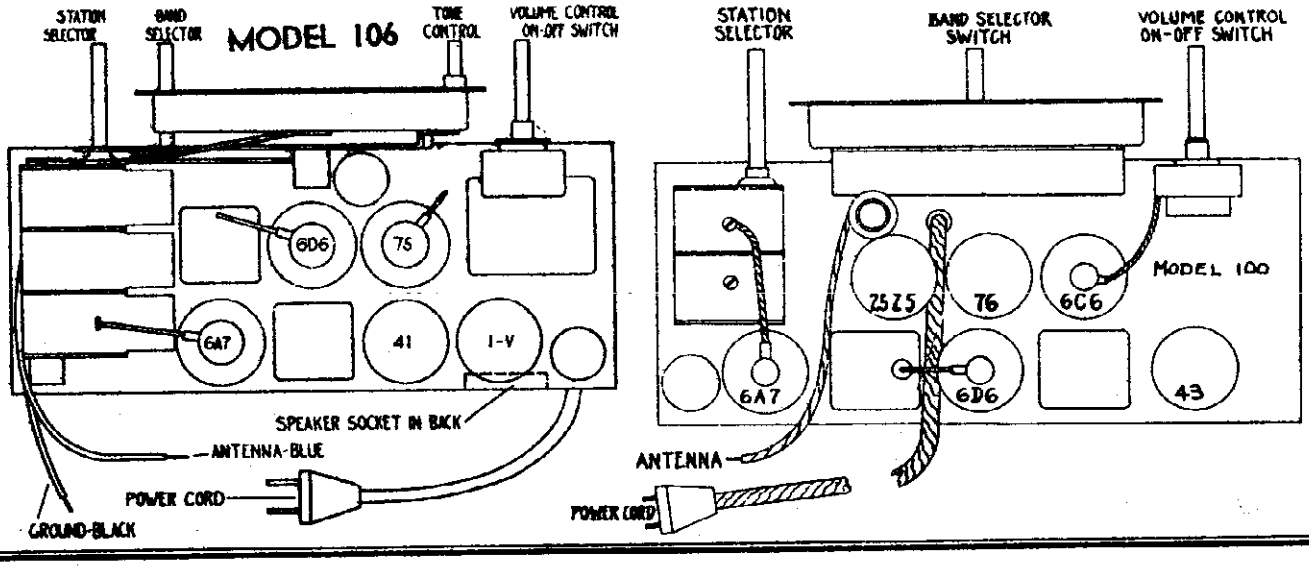

©John F. Rider, Publisher

DETROLA RADIO CORP.

MODEL 101
MODEL 101-
Schematics
Sockets

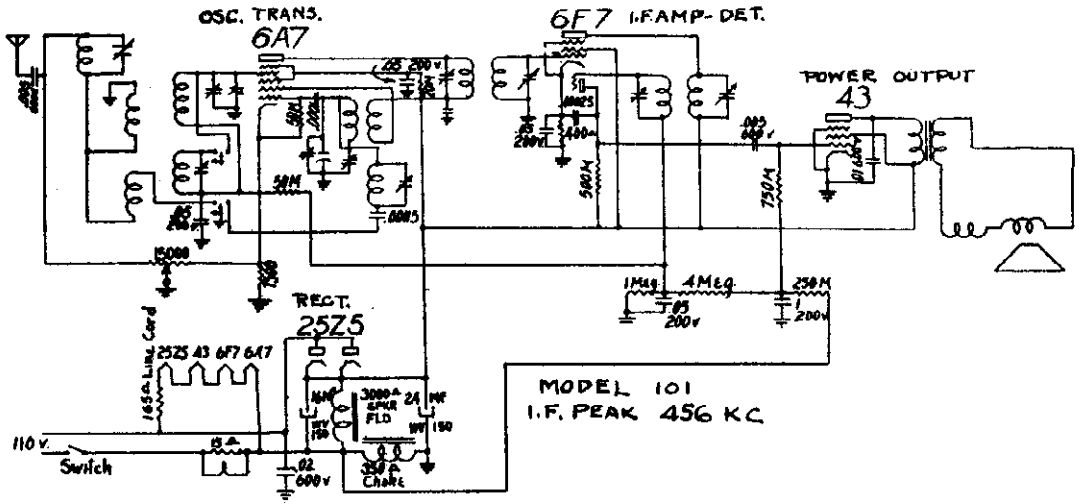

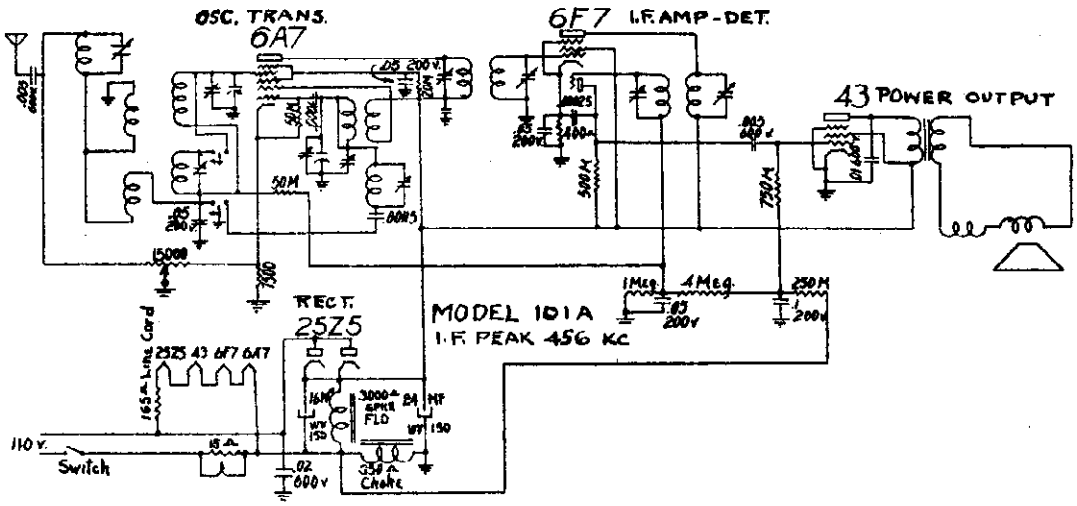

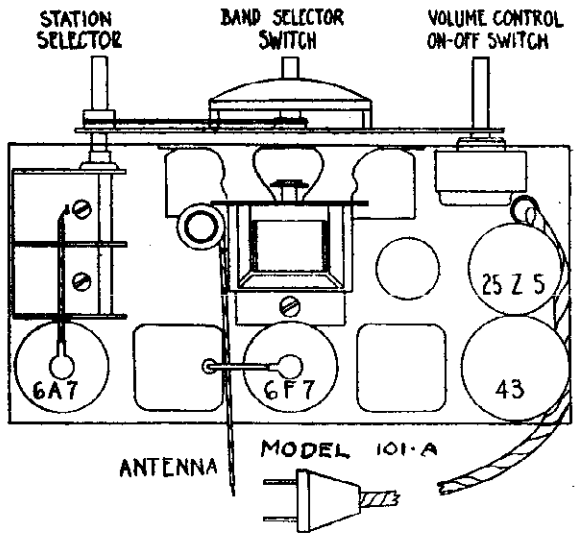

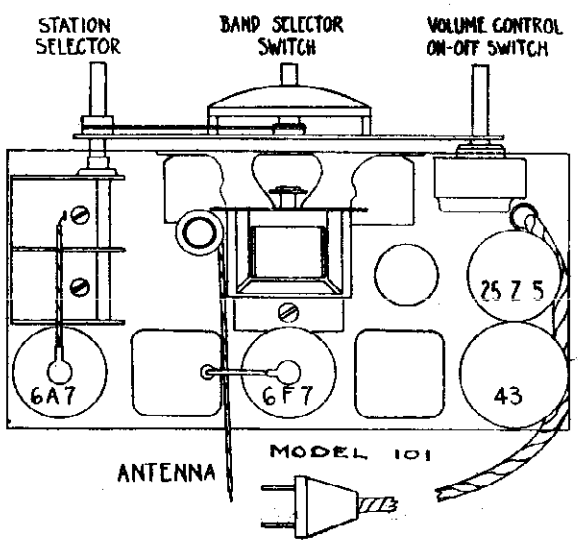

©John F. Rider, Publisher

MODEL 102
Schematic
Socket

DETROLA RADIO CORP.

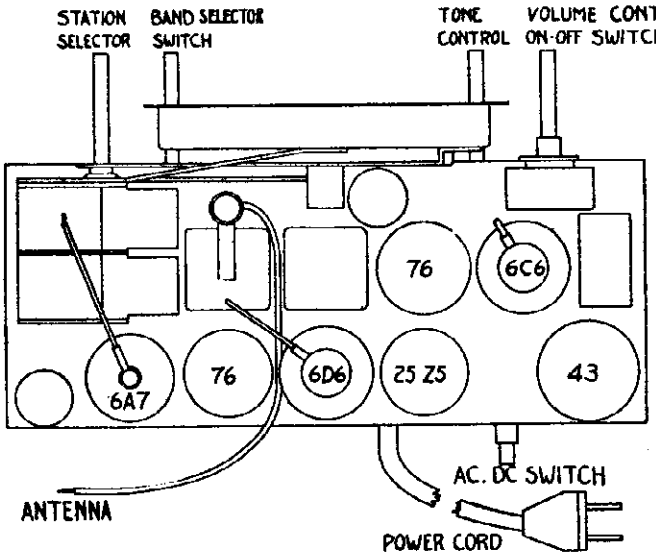

Tubes required are:

1—76	Oscillator.
1—6A7	Translator.
1—6D6	Intermediate frequency amplifier.
1—76	Detector-Automatic volume control.
1—6C6	First audio.
1—43	Power output.
1—25Z5	Rectifier. Voltage Doubler.

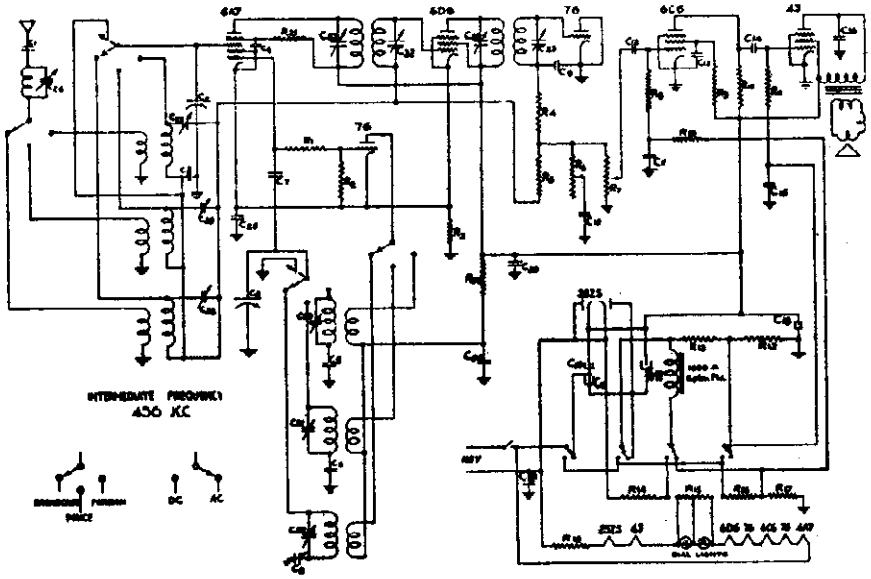

SCHEMATIC CIRCUIT DIAGRAM—MODEL 102

C1	.005 600 v.	C18	24 mfd. 150 w.v. wet el.	R6	2 meg. tone control
C2	.00035 variable air	C19	8/8 mfd. 175 p.v. dry	R7	500M ohms, vol. con. and line switch
C3	.05 200 v.	C20	.1 200 v.	R8	1 meg., 1/3 watt
C4	.05 200 v.	C21	.02 600 v.	R9	1 meg., 1/3 watt
C5	350 mmf. variable mica	C22	120 mmf. trimmer	R10	250M ohms, 1/3 watt
C6	1330 mmf.	C23	120 mmf. trimmer	R11	500M ohms, 1/3 watt
C7	50 mmf. mica	C24	.02 200 v.	R12	200M ohms, 1/3 watt
C8	3850 mmf.	C25	.05 200 v.	R13	500M ohms, 1/3 watt
C9	250 mmf. mica	C26	180 mmf. trimmer	R14	1200 ohms, 3 watt
C10	.01 200 v.	C27	5 to 35 mmf. trimmer	R15	45 ohms, center tapped
C11	.1 200 v.	C28, C29, C30, C31, C32,	1 to 10 mmf. trimmer	R16	370 ohms, 1 watt
C12	.01 400 v.			R17	35 ohms, 1/3 watt
C13	.1 200 v.	R1	200 ohms, 1/3 watt	R18	82 ohms, line cord
C14	.01 400 v.	R2	50M ohms, 1/3 watt	R19	1 meg., 1/3 watt
C15	.25 200 v.	R3	200 ohms, 1/3 watt	R20	5M ohms, 1/3 watt
C16	.005 600 v.	R4	50M ohms, 1/3 watt	R21	20M ohms, 1/3 watt
C17	8 mfd. 250 w.v. wet el.	R5	1 meg., 1/3 watt		

©John F. Rider, Publisher

©John F. Rider, Publisher

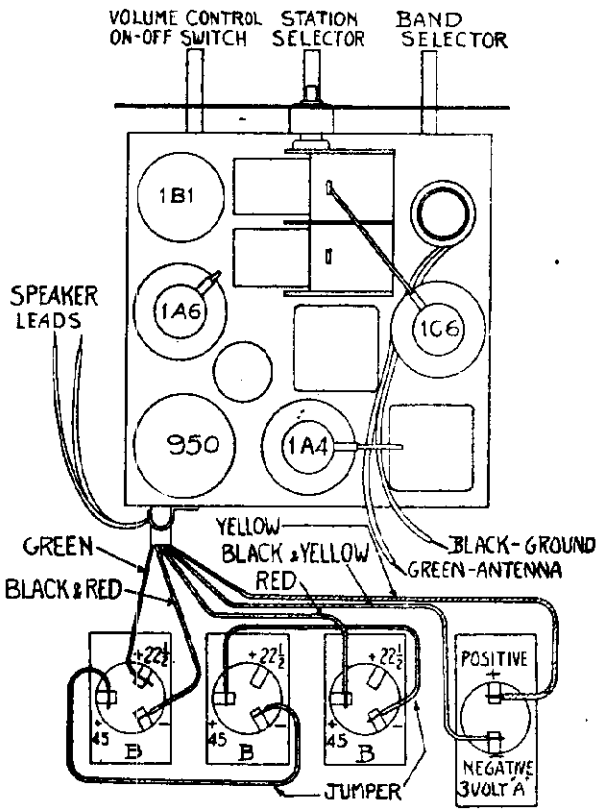

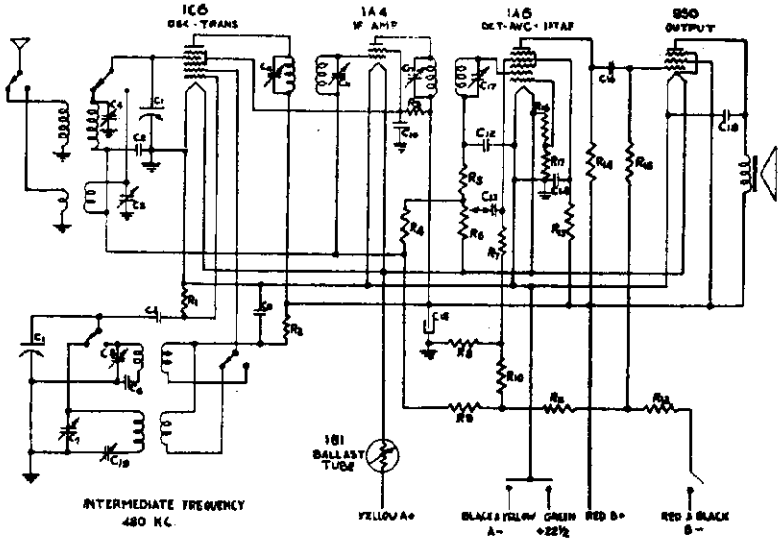

MODEL 103

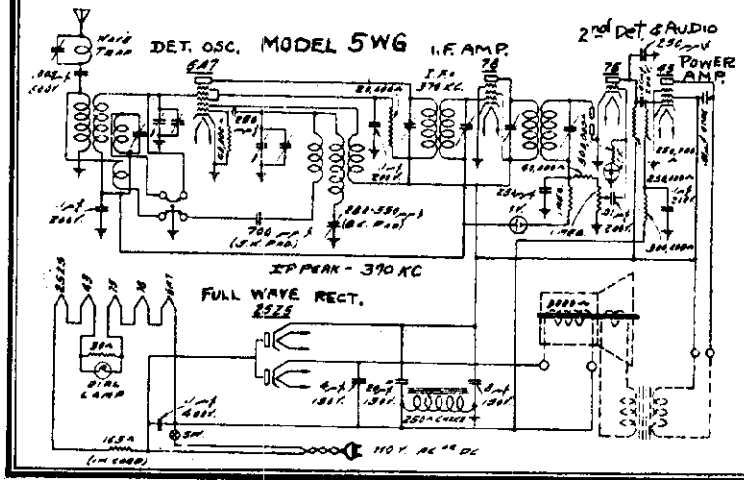

PARTS LIST

MODEL 103

C1	350 mmf. var. air	C13	.01 200 v.	R6	5 meg v. c.
C2	1 200 v.	C14	.01 400	R7	1 meg.
C3	3-35 mmf.	C15	16 mf. 150 v.	R8	200 ohms
C4	1-10 mmf.	C16	.005 600 v.	R9	2 meg.
C5	50 mmf. mica	C17	80 mmf. trim	R10	300 ohms
C6	005	C18	.003 600v.	R11	500 ohms
C7	3-35 mmf.	C19	350 mmf. var. mica	R12	800 ohms
C8	1-10 mmf.	R1	50 M.	R13	60 M.
C9	.02 200 v.	R2	5 M.	R14	250 M.
C10	.1 200 v.	R3	25 M.	R15	1 meg.
C11	80 mmf. trim	R4	2 meg.	R16	100 ohms
C12	250 mmf. mica	R5	50 M.	R17	100 ohms

MODEL 106-E
MODEL 108
Schematics
Socket

DETROLA RADIO CORP.

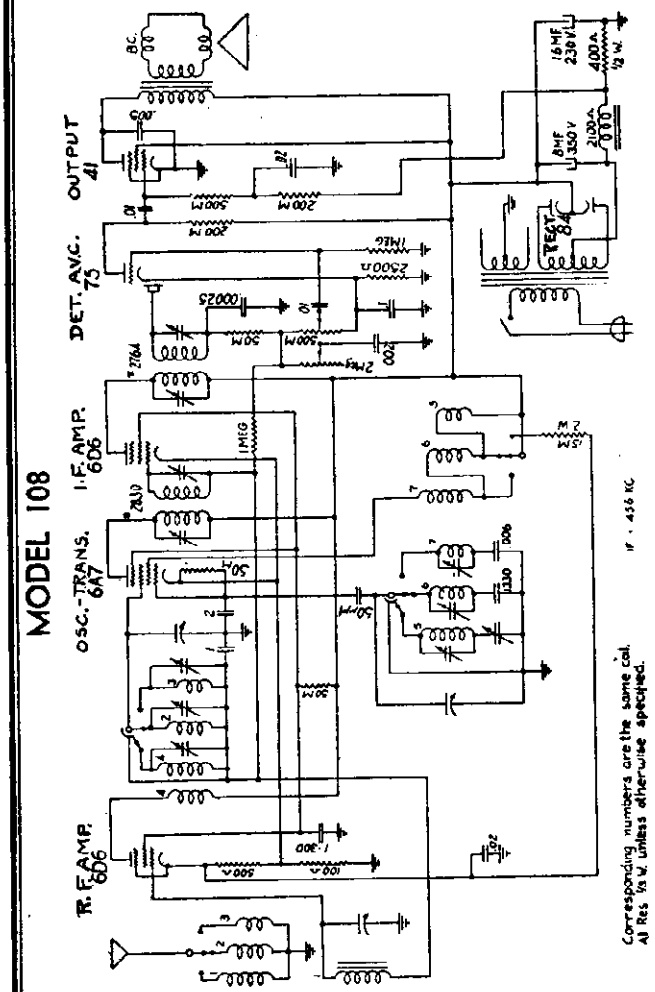

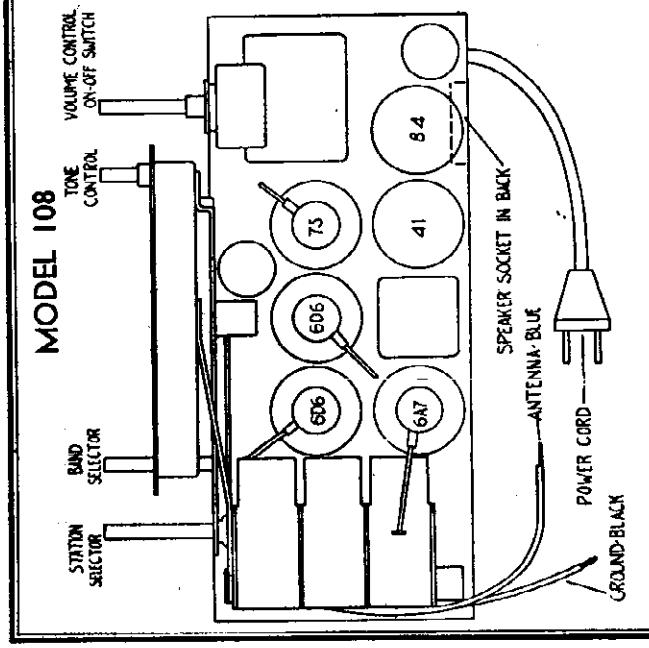

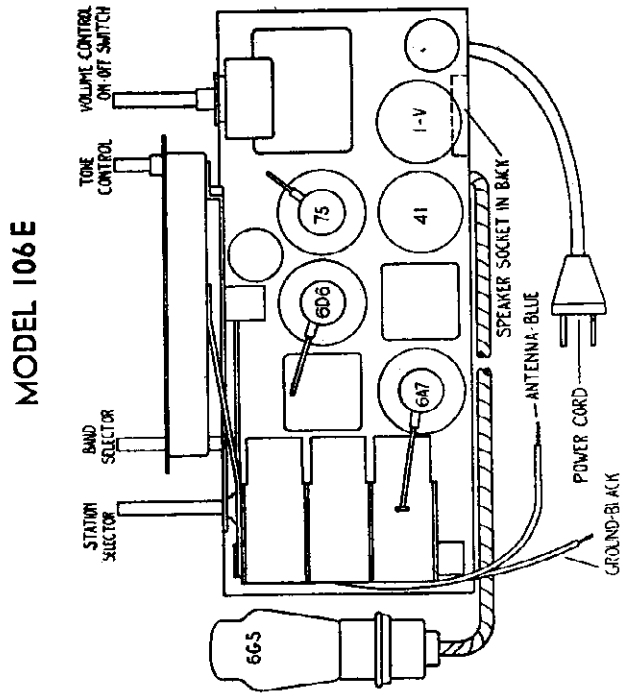

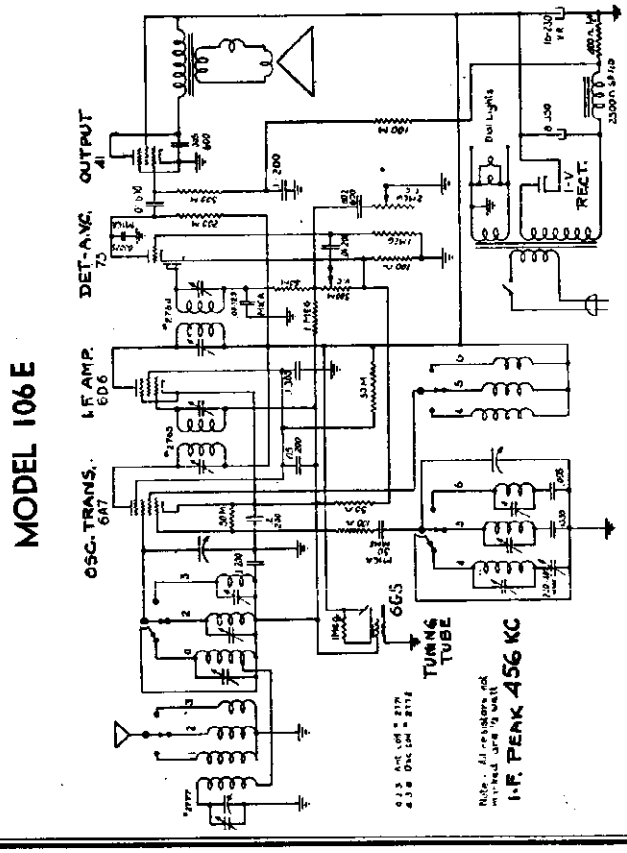

©John F. Rider, Publisher

©John F. Rider, Publisher

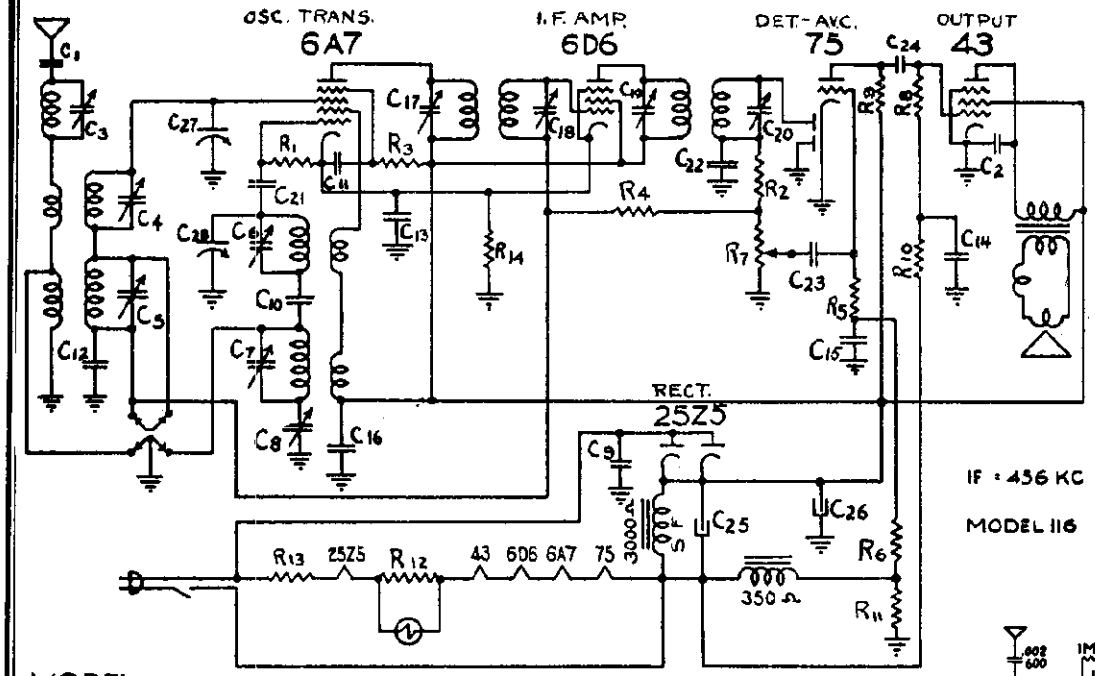

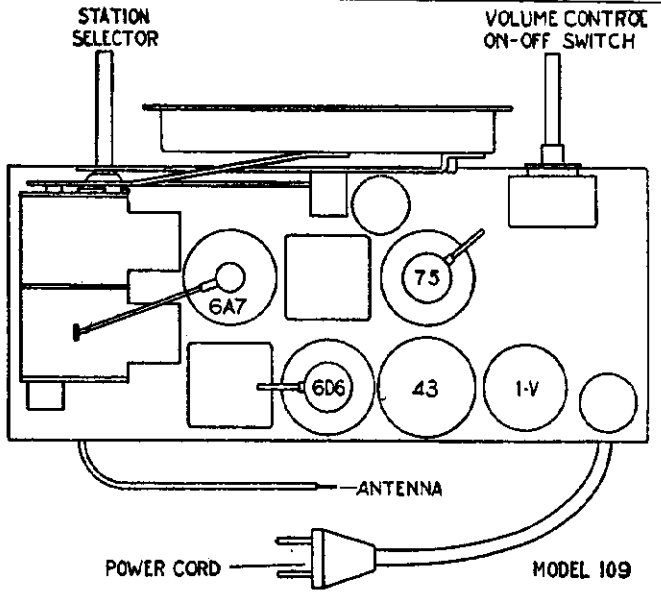

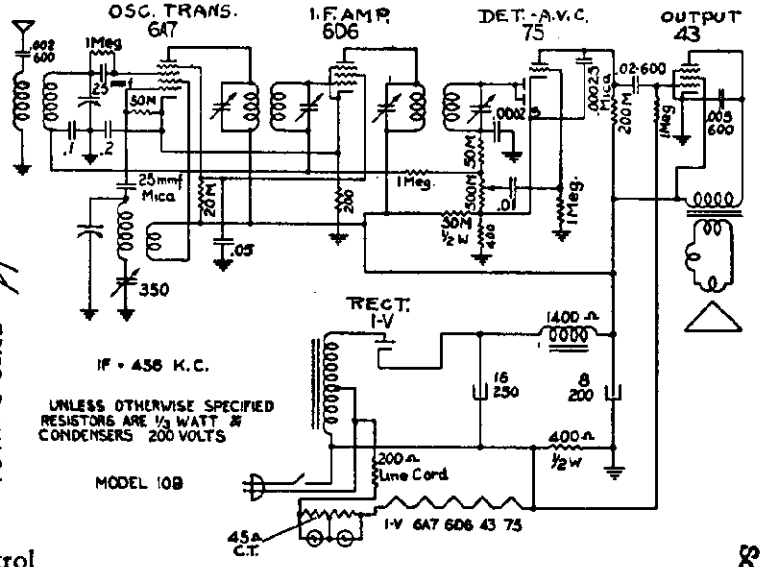

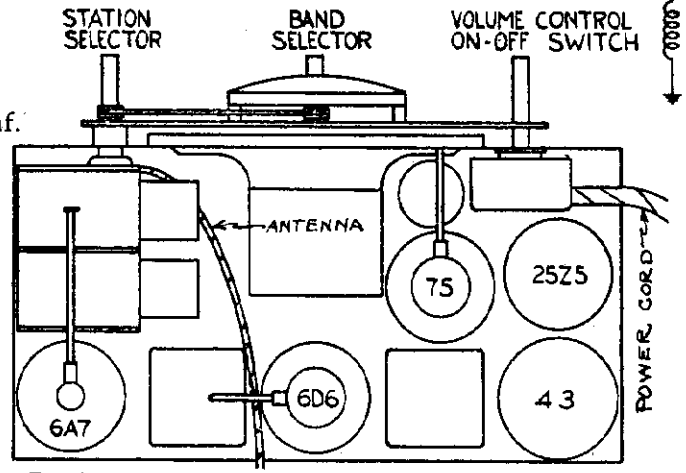

MODEL 116

C1, C2 .005 - 600 v.
C3 180 mmf. trimmer
C4, C5, C6, C7, 1 - 10 mmf.
C8 350 mmf. padder
C9 .02 - 600
C10 1150 mmf. mica
C11, C12 .05 - 200
C13, C14, C15, C16 .1 - 200 v.
C17, C18, C19, C20 100 - 125 trimmer
C21 50 mmf. mica
C22 250 mmf. mica
C23, C24 .01 - 600 v.
C25 16 mfd. 150 v.
C26 24 mfd. 150 v.
C27, C28 variable

R1, R2, 50M 1/3 w.
R3 20M 1/3 w.
R4, R5, R6 1 meg. 1/3 w.
R8 500M 1/3 w.

R7 500M volume control and switch
R9 200M 1/3 w.
R10 300M 1/3 w.
R11 20 ohms. 1/2 w.

R12 22.5 ohms. 2 watt
R13 135 ohms. line cord
R14 100 ohms. 1/3 w.

MODEL 114
Schematic
Socket

DETROLA RADIO CORP.

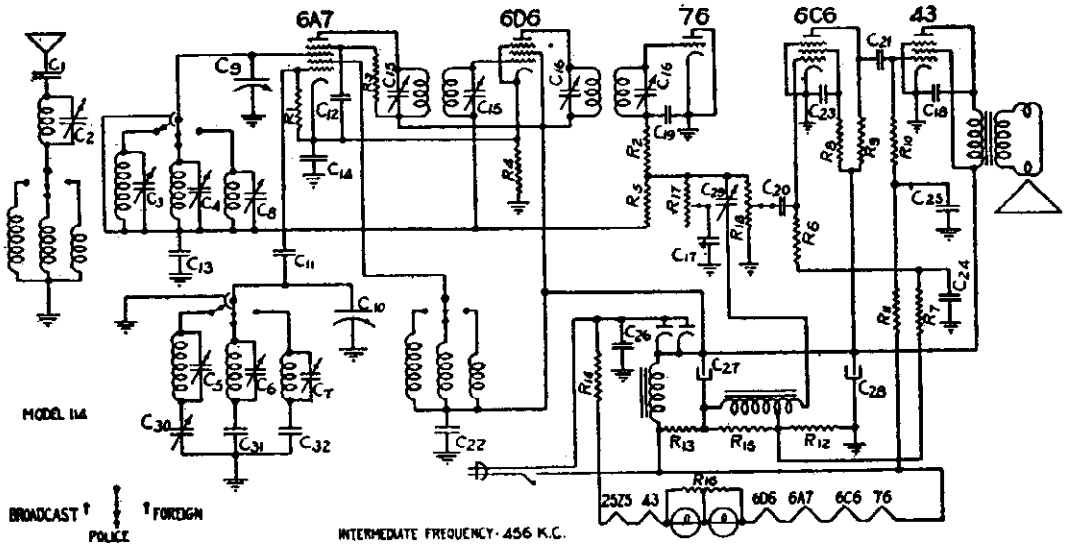

Tubes required are:

1-6A7 Oscillator-translator.
1-6D6 Intermediate frequency amplifier.
1-76 Detector-Automatic volume control.
1-6C6 First audio.
1-43 Power output.
1-25Z5 Rectifier.

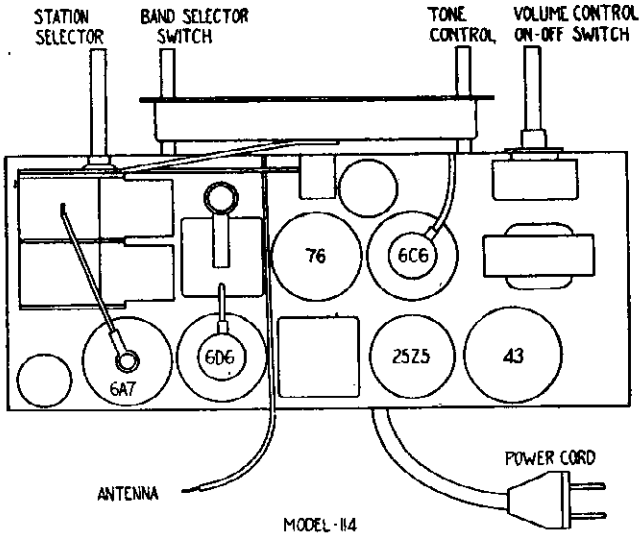

MODEL 114

PARTS LIST

C-1 .005 600 v.
C2 180 mmf. trimmer
C3, C4, C5, C6, C7, 1 to 10 mmf. trimmer
C8 3 to 35 mmf. trimmer
C9, C-10 350 mmf. air variable
C11 50 mmf. mica
C12, C13, .05-200 v.
C14 .2 200
C15, C16 120 mmf. trimmer
C17, C18 .003 600 v.
C19 250 mmf. mica
C20 .01 200 v.
C21 .01 400 v.
C22, C23, C24 .1 200 v.
C25 .2 200 v.
C26 .02 600 v.
C27 16 mfd. 150 v. wet electrolytic
C28 24 mfd. 150 v. wet electrolytic
C29 3 to 35 mmf. trimmer
C30 220 to 550 mmf. padder
C31 1330 mmf. padder
C32 3850 mmf. padder
R1, R2 50M ohms
R3 20M ohms
R4 200 ohms
R5, R6, R7, R8 1 megohm
R9 250M ohms
R10 500M ohms
R11 300M ohms
R12, R13 35 ohms
R14 100 ohms line cord
R15 10M ohms
R16 45 ohms center tapped
R17 2 megohms tone control
R18 500M ohms vol. control

TUBE LAYOUT CHART — MODEL 114

©John F. Rider, Publisher

DEWALD RADIO

MODEL 430
MODEL 515
Schematic

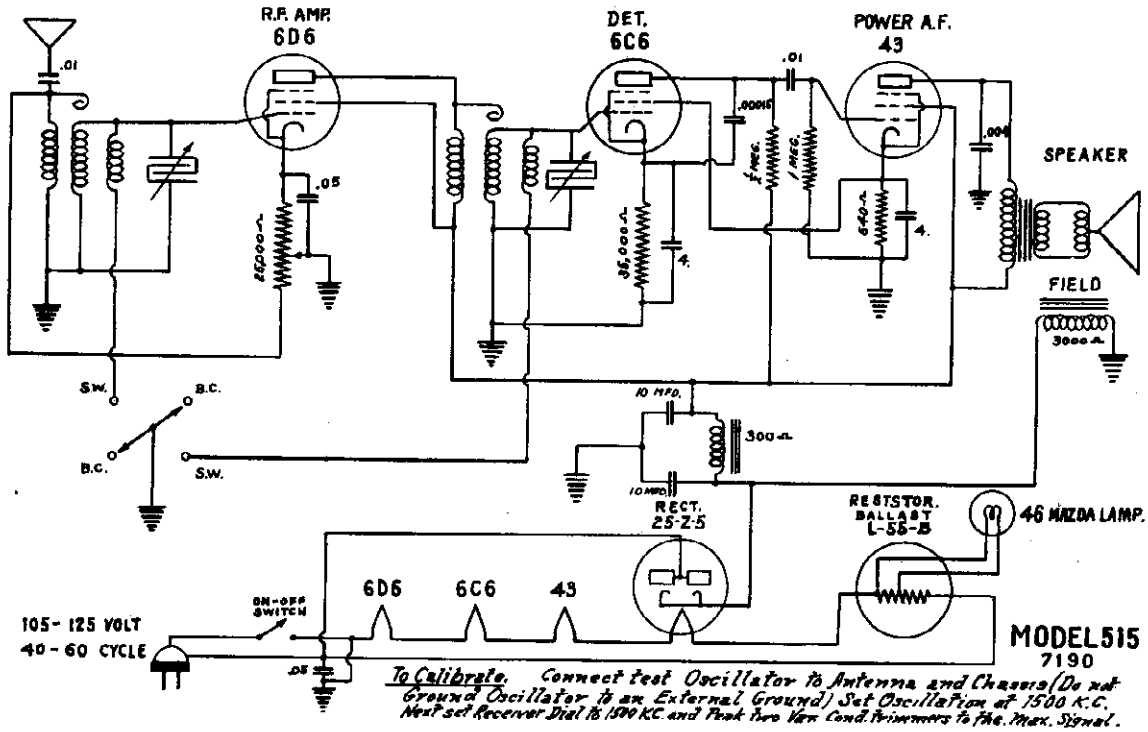

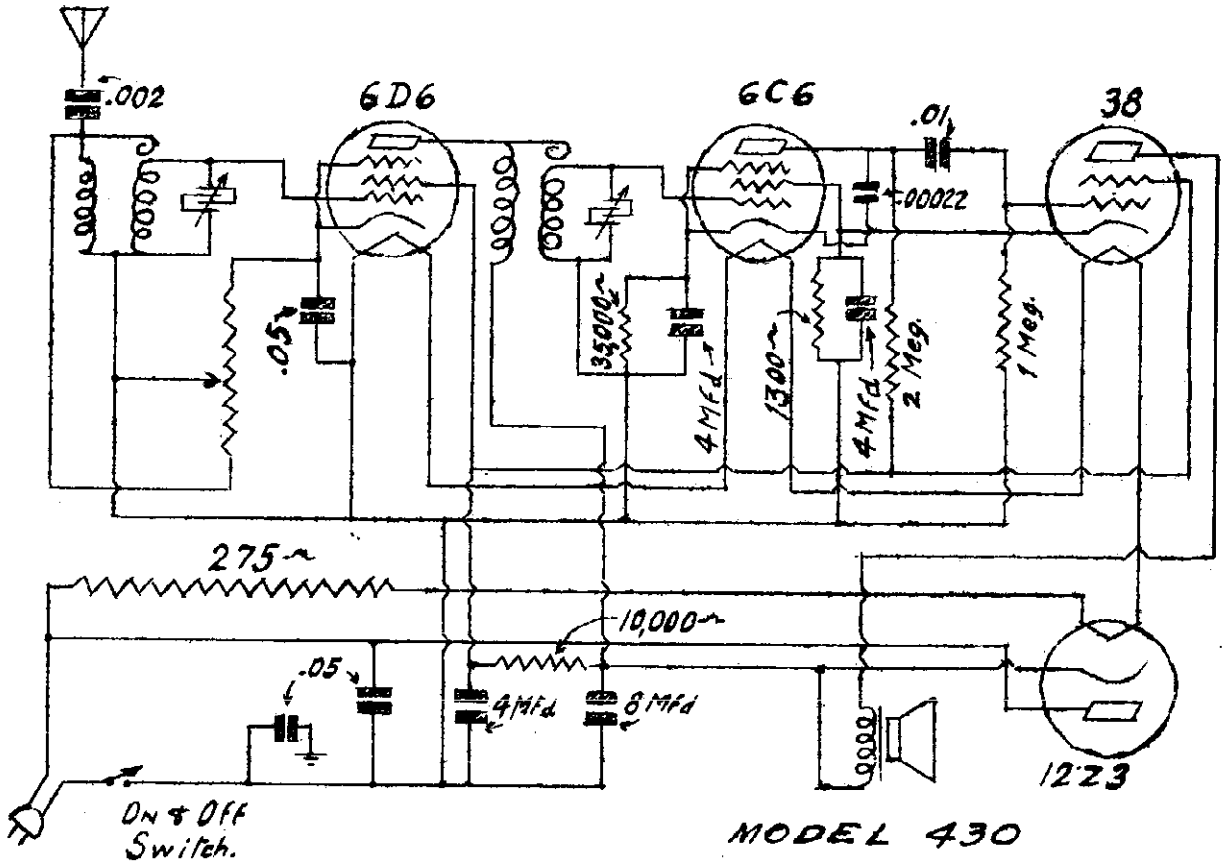

©John F. Rider, Publisher

MODEL 517
Schematic, Socket

DEWALD RADIO

Trimmers, Alignment Notes, Parts

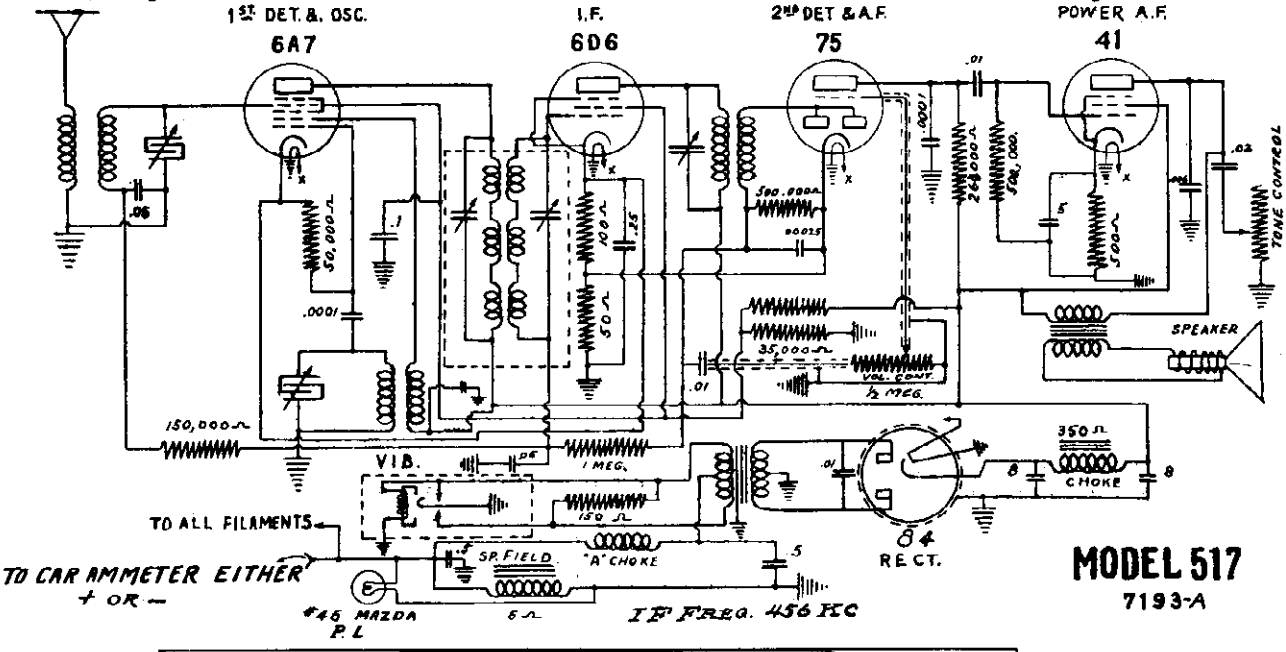

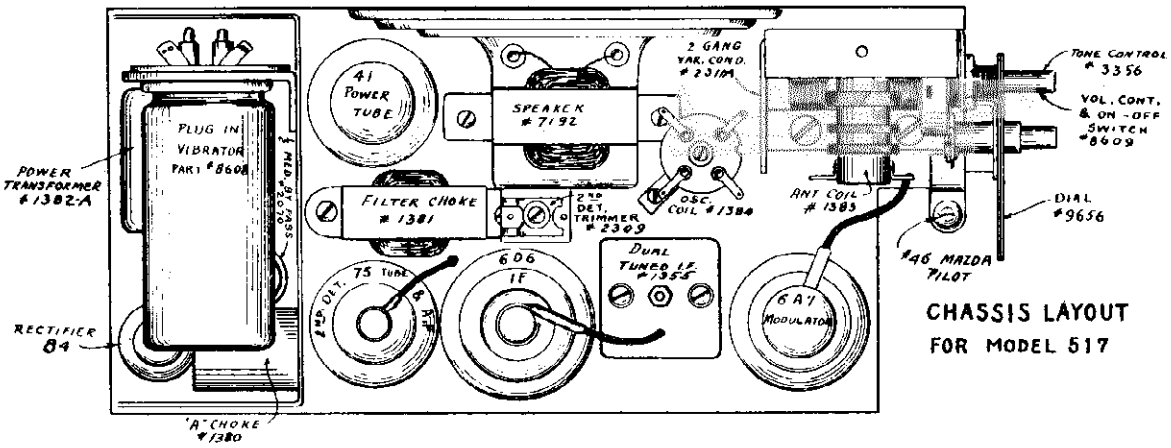

CHASSIS LAYOUT FOR MODEL 517

CALIBRATION INSTRUCTIONS Connect test Oscillator, Hot lead, to the grid of the 6-A-7 tube and the "Cold" lead to the receiver chassis, short circuit the Receiver's variable condenser cut Oscillator section. Peak - I.F. two trimmers in the top of the aluminum shield and trimmer in rear of speaker to 456-K.C. - After the I.F. has been Peaked, remove short from the variable condenser stator and connect test Oscillator "Hot lead" to the antenna Lead-in of the Receiver. Set test Oscillator and Receiver to 1500 K.C. and adjust variable condenser trimmers for max. signal.

Antenna Lead: A Shielded Antenna lead is connected to the set. If any connections, extensions or alterations are made to this lead care should be taken to see that the lead is well shielded to a point without the field of interference. It is also necessary to ground the "far" end of the Antenna lead-in shield.

Battery: The battery should be kept in a well charged condition and the terminals cleaned of corrosion. Check generator charging rate to keep battery in charged condition.

Ignition Coil: In cases where noise is originating from the ignition coil, it may be overcome by placing a copper shield around the coil and grounding same.

Battery Cables: May be corroded at the battery end are making imperfect contact. Keep all battery cables and wires away from the high tension system. It may also be of advantage to place a choke coil of about 50 turns of #16 wire in series with the main battery lead to the set.

Wires under Car: Where wires run along chassis or other metal parts below the car they should be inspected for quality of insulation and general condition. It may be well to place a condenser at the stop light switch and at the tail light.

Distributor: Points may be burned or improperly adjusted. Rotor arm may be making poor contact with cap.

Distributor Cables: Cables may be "leaking" due to poor or burned insulation. In some installations it may be necessary to shield the high tension leads with copper braid. If ignition cables are braided with plain rubber insulation it is not advisable to place shielding directly over the wire. In this case the wire should be first covered with a varnished composition covering or loom. The battery lead from the ammeter to the distributor coil and the battery lead to the generator should be shielded.

Dome Light Wire: If dome light wire is radiating, it may be necessary to shield this wire. A .5 Mfd. condenser or a choke in series with this lead by-passed at either side of choke to chassis may help considerably. These connections should be made at the point where the dome light enters the upright post.

Bending: Although metal joints on the car, such as dash panel to side of car etc., may appear to be solid they may not be making good electrical contact and are causing noise. Paint and other material may get into seams and cause poor or intermittent contacts and for this reason it may be necessary to bond certain parts of the car. The brake rods, drive shaft tubes and parts around the motor should be bonded.

For Realigning Receiver See Circuit Diagram.

NUMBERS AND LIST PRICES OF REPLACEMENT PARTS

PART NO.		PART NO.		LIST
1382	Power Transformer	2047	.00085 Mfg Cond.	.35
1380	"A" Choke	2123	.0001 " "	.35
1383	Antenna Coil	2070	.5 Mfd Cub "	.40
1381	"B" Choke	2214	Ammeter	.50
1355	Dual tuned IF Coil	2152	Generator	.40
1379	2nd Det. Coil	5107	Antenna Cable	.25
1384	Osc. Coil	5108	Battery Cable	.20
2311	2 gang Var. Cond.	7192	Speaker	4.45
2310	8 x 8 Elec. Cond.	8699	Comb. Vol. Control	1.25
2312	5 " " "	35V .40	3556 Tone Control	.95
2309	Single Trimmer Cond.	.80	8611 Knob	.20
2302	.01 Cub Cond.	10007 .35	8608 Vibrator	3.50
2056	.01 " "	.35	9560 Mounting Stud	.10
2022	.1 " " "	.35	8016 Pilot Lamps	.10
2191	.02 " " "	.35	7/16 Hexagon Nut	.02
2046	.05 " " "	.35		
2033	.25 " " "	.40		

F16/M

©John F. Rider, Publisher

DEWALD RADIO

MODELS 606, 617 (Early and Late) Schematic, Parts, Notes

NUMBERS AND LIST PRICES OF REPLACEMENT PARTS

1311	Power Transformer	$ 3.00
1163	A Choke	.30
1312	Suppressor Choke	.35
1381	B Choke	.95
1307	Antenna Coil	.90
1308	1st Detector Coil	.95
1309	Dual I.F. Transformer	1.50
1310	2nd Detector Coil	1.30
1401	Oscillator Coil	.75
2325	3 Gang Variable Condenser	4.50
2269	Dual 6 Electrolytic Condenser	2.05
2270	Dual 5 Electrolytic Condenser	1.15
2094	.001 Mica Condenser	.40
2241	.0004 Mica Condenser	.35
2267	.0015 Mica Condenser	.40
2046	.05 Cub Condenser	.35
2191	.02 Cub Condenser	.35
2215	.005 Cub Condenser	.35
2219	.5 Cub Condenser	.40
2220	Dual .025 Cub Condenser	.60
2244	.015 Cub Condenser	.40
2152	.25 Generator Condenser	.50
2214	.5 Ammeter Condenser	.40
5077	Antenna Cable	.85
5094	Combination A Cable	.50
7194	Speaker	5.30
8463	Vibrator	6.00
8399	Fuse Retainer	.20
8400	15 Ampere Fuse	.05 (net)
3368	Tone Control	.55
8462	Switch and Volume Control	1.10
8405	Knob	.20
	Remote Control	4.25
	Cable and Sheath	1.50
9517	Mounting Stud	.05 (net)
	7/16 Hexagon Nut	.05 (net)
	Wing Nuts	.05
	Pilot Lamps	.10

PRICES SUBJECT TO CHANGE WITHOUT NOTICE

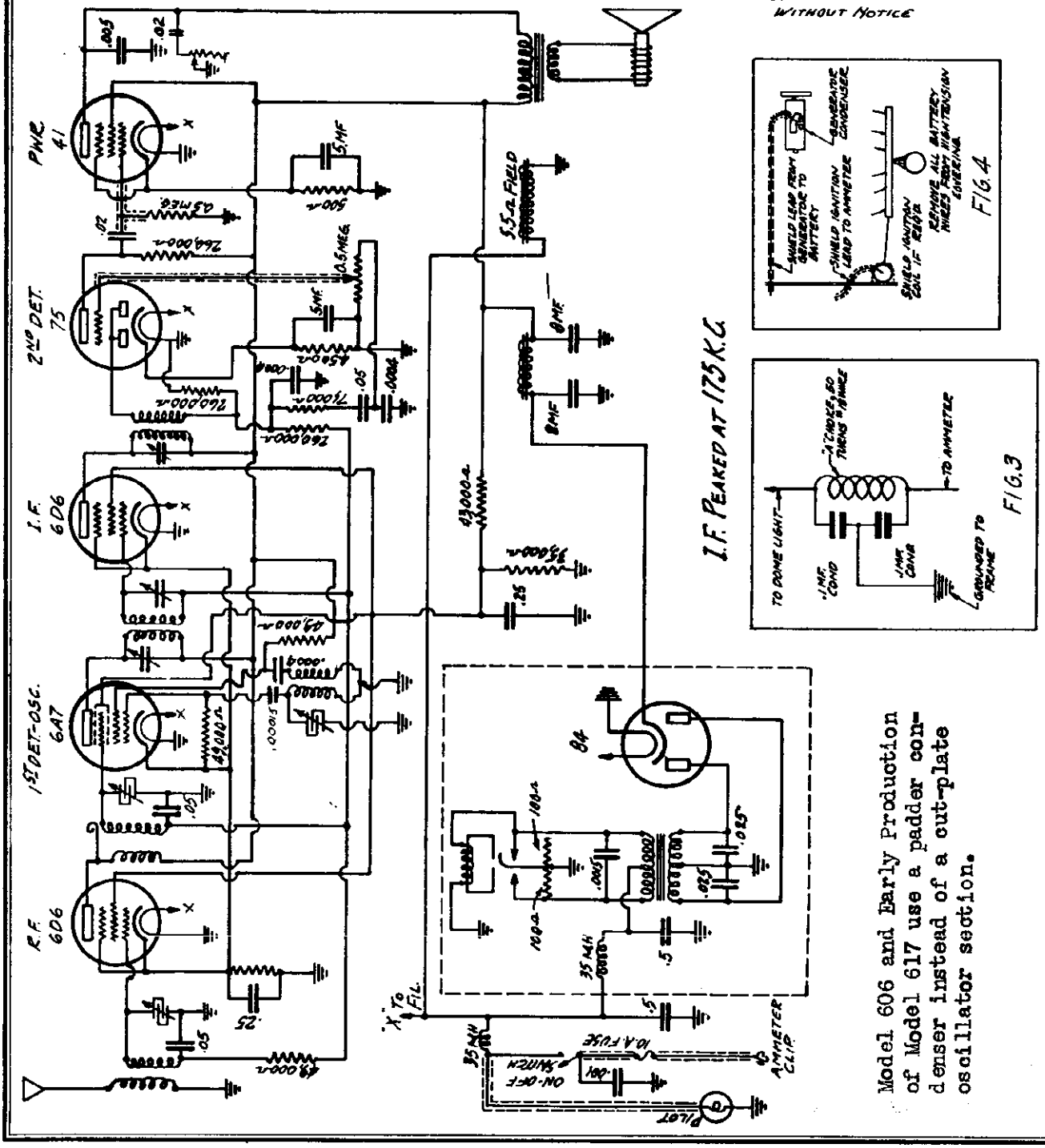

Model 606 and Early Production of Model 617 use a padder condenser instead of a cut-plate oscillator section.

©John F. Rider, Publisher

MODELS 606,617(Early and Late) Socket, Trimmers, Alignment

DEWALD RADIO

Is a six tube superheterodyne receiver with full automatic volume control operating on all three radio frequency tubes. The speaker and eliminator are assembled in the same case as the receiver, permitting simple installation. Tone modulation is obtained by turning knob on right side of receiver cover.

BATTERY VOLTAGE — The set operates on a 6 to 8 volt battery with either POSITIVE or NEGATIVE ground.

TUBES — 6D6, 6A7, 6D6, 75, 41 and 84 (6Z4)

ANTENNA — The Antenna may be either the copper mesh or built in type furnished as standard equipment on some cars, or in the case of the new metal roof, or "Turret Top" cars it may be a plate type or balanced Hairpin type Antenna mounted under the running board.

INSTALLATION — Connect ammeter condenser to spring clip at end (See fig. #1) of wire in which the fuse holder is located. Use the self tapping screw provided. Compress the clip and slide it on battery side of ammeter. Ground other terminal of ammeter condenser to any convenient point. Plug antenna lead into connection on right side of set by pushing in and turning to the right. Attach "lead-in" to car antenna. Install the generator condenser by connecting the lead to the generator terminal and grounding the case of the condenser.

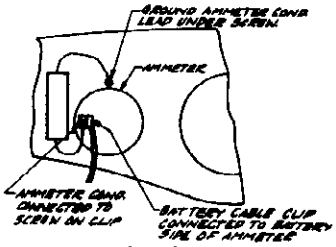

FIG 5

FUSE — The fuse is located in a metal retainer in the wire that connects to the ammeter. A standard automobile type 15 ampere fuse should be used for replacement, being sure to use ribbed cover. Do not use anything else in place of fuse as guarantee will be invalidated.

REMOTE CONTROL — The remote control unit is furnished with drive cables attached. It may be well to examine the set screws holding the cables in place to see that they have not become loosened in shipping. Locate the unit on the steering column and fasten same by means of control clamp.

After the unit has been mounted, looking at the front of unit, the larger knob is the tuning control and the smaller one is the key, switch and volume control.

The remote control cables should now be connected to the receiver by inserting them into cable bushings located on the left side of the set. The drive cable (tongue end) should be inserted into the bushing at the rear of the set and the volume control cable (slotted end) into the one nearer the front. After the cables have been inserted the knobs on the remote control unit should be turned back and forth several times to be sure that the cables are engaged. The cable bushing set screws should now be tightened to hold them firmly in place.

To adjust pointer on remote control dial, turn larger knob as far to right as it will go, then with a small screw driver turn the adjusting screw in the rear of the remote control unit until the pointer is on the first dial mark on the right side of the dial. (below 150) The tuning of the set will then agree with the dial calibration.

LIST OF ACCESSORY PARTS

1 Mounting Stud
1 Mounting Washer
1 Mounting Nut
1 Lock Nut
1 Remote Control Unit
1 Drive Sheath and Cable
1 Volume Control Sheath and Cable
1 Mazda Pilot Lamp #55, 6-8 Volts
1 Antenna Plug and Lead-In
1 Generator Condenser
1 Ammeter Condenser
1 Key Knob

NOISE SUPPRESSION

This receiver has been designed to operate without the use of either spark plug or distributor suppressors. If the ignition system is faulty, or if the set is installed in an old model car where the ignition system radiates badly, it may be necessary to place a suppressor at the distributor in series with the main high tension lead. If spark plug interference is still noticed it may also be necessary to place a suppressor on each plug.

It is important that all items and connections in the electrical system of the car be in good condition. If excessive noises are present it may be well to examine the following points.

1. Antenna Lead: A Shielded Antenna lead is furnished with the set. If any connections, extensions or alterations are made to this lead care should be taken to see that the lead is well shielded to a point without the field of interference. It is also necessary to ground the "Far" end of the Antenna lead-in shield.

2. Battery: The battery should be kept in a well charged condition and the terminals cleaned of corosion. Check generator charging rate to keep battery in charged condition.

3. Ignition Coil: In cases where noise is originating from the ignition coil, it may be overcome by placing a copper shield around the coil and grounding same (See fig. #4).

4. Battery Cables: May be corroded at the battery and are making imperfect contact. Keep all battery cables and wires away from the high tension system. It may also be of advantage to place a choke coil of about 50 turns of #16 wire in series with the main battery lead to the set.

5. Wires under Car: Where wires run along chassis or other metal parts below the car they should be inspected for quality of insulation and general condition. It may be well to place a condenser at the stop light switch and at the tail light.

6. Distributor: Points may be burned or improperly adjusted. Rotor arm may be making poor contact with cap.

7. Distributor Cables: Cables may be "leaking" due to poor or burned insulation. In some installations it may be necessary to shield the high tension leads with copper braid. If ignition cables are insulated with plain rubber insulation it is not advisable to place shielding directly over the wire. In this case the wire should be first covered with a varnished composition covering or loom. The battery lead from the ammeter to the distributor coil and the battery lead to the generator should be shielded. (See fig. #4)

8. Dome Light Wire: If dome light wire is radiating it may be necessary to shield this wire. A single .5 mfd. condenser or a double condenser and choke as shown in fig. #3 connected at the point where the dome light wire enters the upright post will clear up this trouble.

9. Bonding: Although metal joints on the car, such as dash panel to side of car etc., may appear to be solid they may not be making good electrical contact and are causing noise. Paint and other material may get into seams and cause poor or intermittant contacts and for this reason it may be necessary to bond certain parts of the car. The brake rods, drive shaft tubes and parts around the motor should be bonded.

SERVICE NOTES

INT. FREQ. ALIGNMENT — Intermediate frequency peaked at 175 K.C. Connect test oscillator to grid of 6A7 and ground. (Ground stator of oscillator condenser during this operation)

R.F. ALIGNMENT — Connect test oscillator to antenna and ground. Set dial to 1500 K.C. and align trimmer condensers on variable condensers for maximum signal. All other frequencies will automatically be aligned because of cut section oscillator condenser.

(Model 606 and Early Model 617 use a padding condenser)

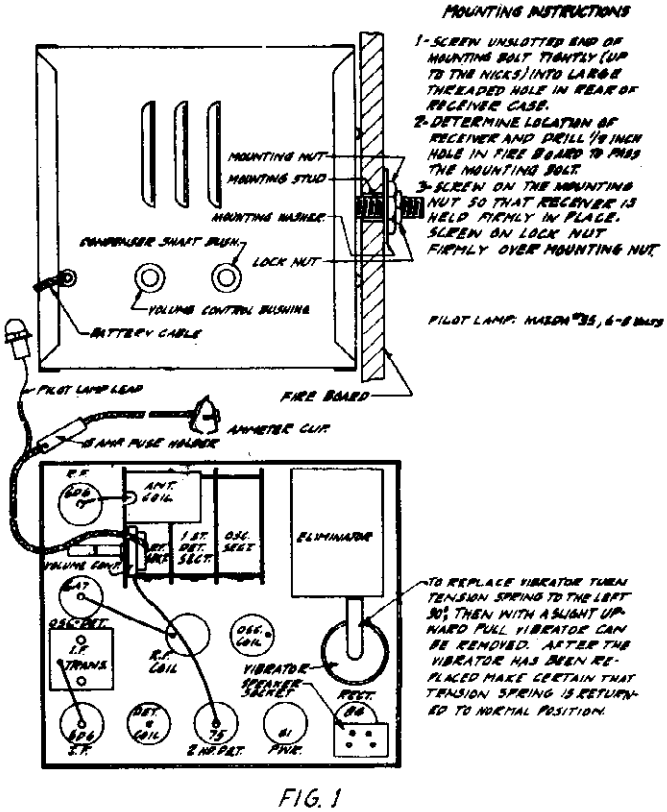

FIG. 1

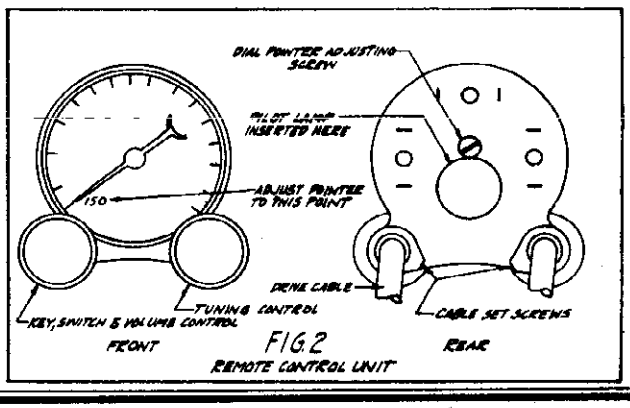

FIG 2
REMOTE CONTROL UNIT

DeWALD RADIO

MODEL 518
MODEL 520
Schematics
Alignment

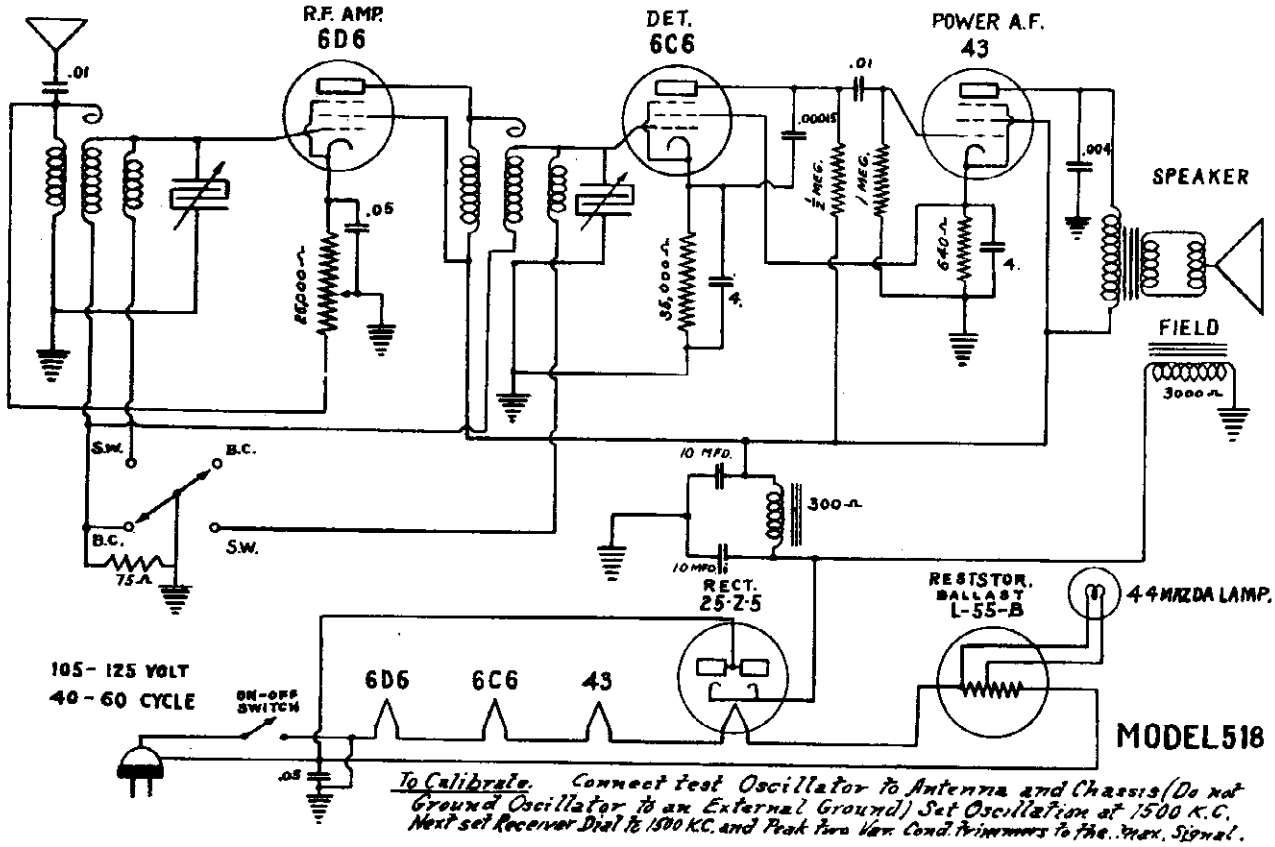

To Calibrate. Connect test Oscillator to Antenna and Chassis (Do not Ground Oscillator to an External Ground) Set Oscillator at 1500 K.C. Next set Receiver Dial to 1500 K.C. and Peak Two Var. Cond. Trimmers to the Max. Signal.

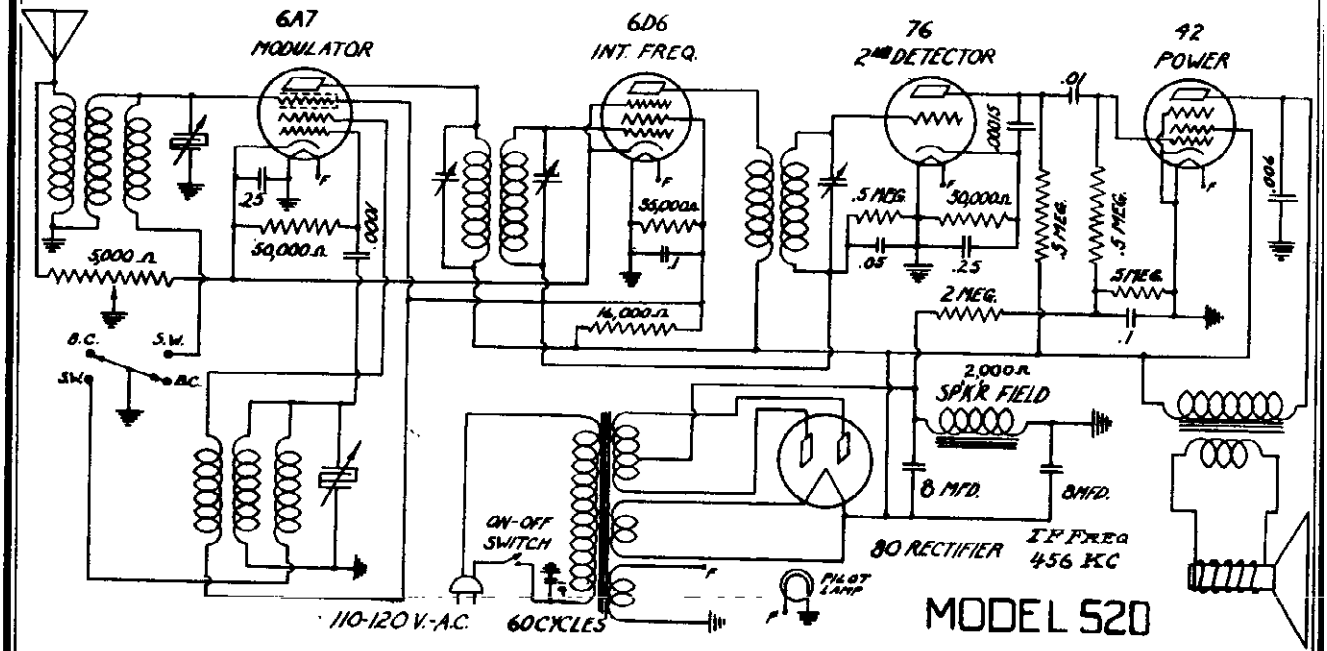

TO CALIBRATE- SET SERVICE OSCILLATOR TO 456 K.C. AND CONNECT 'HOT' LEAD TO GRID OF 6A7 TUBE GROUND STATOR OF REAR (OSCILLATOR) SECTION OF VARIABLE CONDENSER. TURN VOLUME CONTROL FOR MAXIMUM OUTPUT AND PEAK INTERMEDIATE FREQUENCY TRIMMERS FOR MAXIMUM GAIN REMOVE SHORT FROM VARIABLE CONDENSER. REMOVE SERVICE OSCILLATOR LEAD FROM GRID OF 6A7 TUBE AND CONNECT SAME TO RED LEAD ON REAR OF SET. ADJUST SERVICE OSCILLATOR AND THE RECEIVER TO 1500 K.C. AND PEAK TRIMMERS ON VARIABLE CONDENSER FOR MAXIMUM GAIN. ALL THE OTHER FREQUENCIES ARE AUTOMATICALLY CALIBRATED WHEN RECEIVER IS PEAKED AT 1500 K.C. DUE TO THE CONSTRUCTION OF THE CUT SECTION OF VARIABLE CONDENSER.

MODEL 616
MODEL 619
Schematics
Alignment

DEWALD RADIO

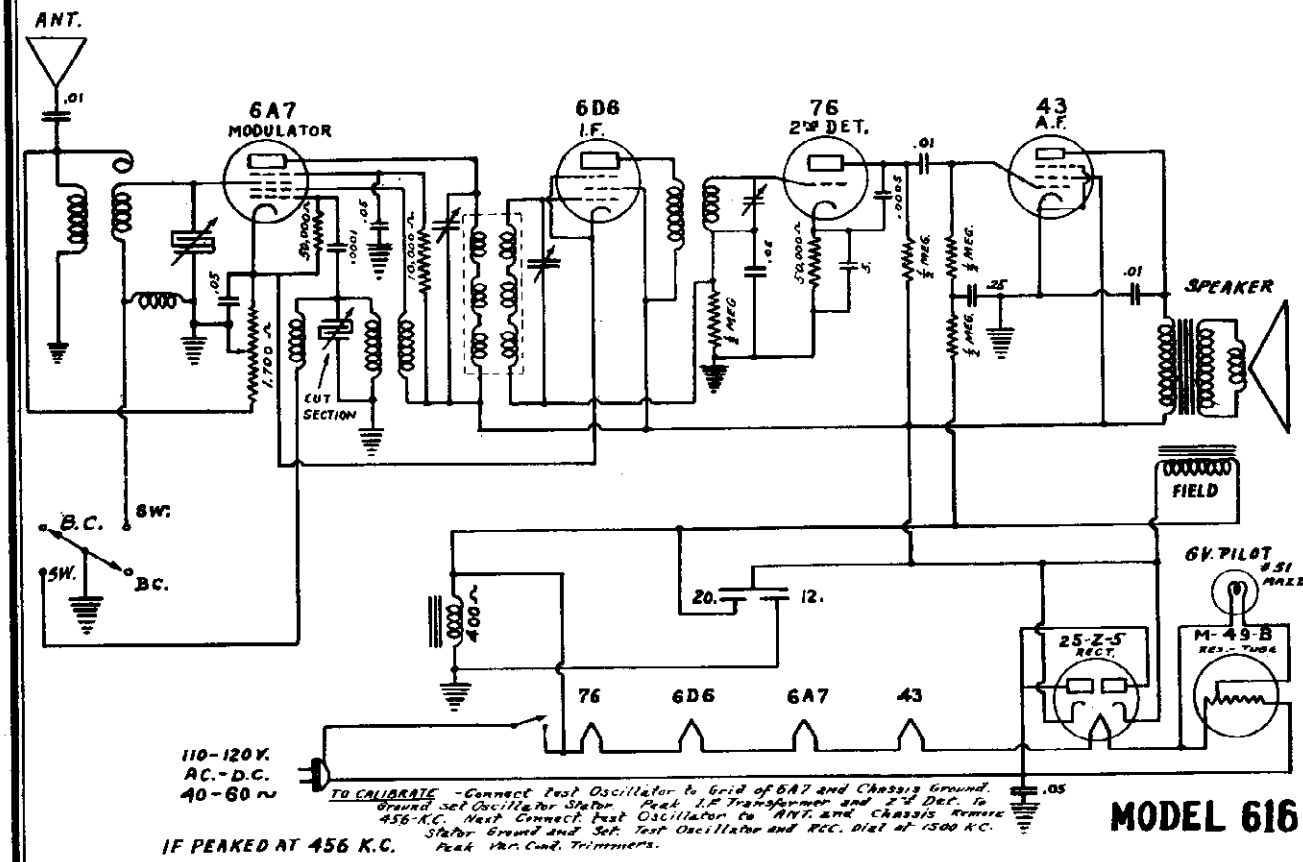

MODEL 616

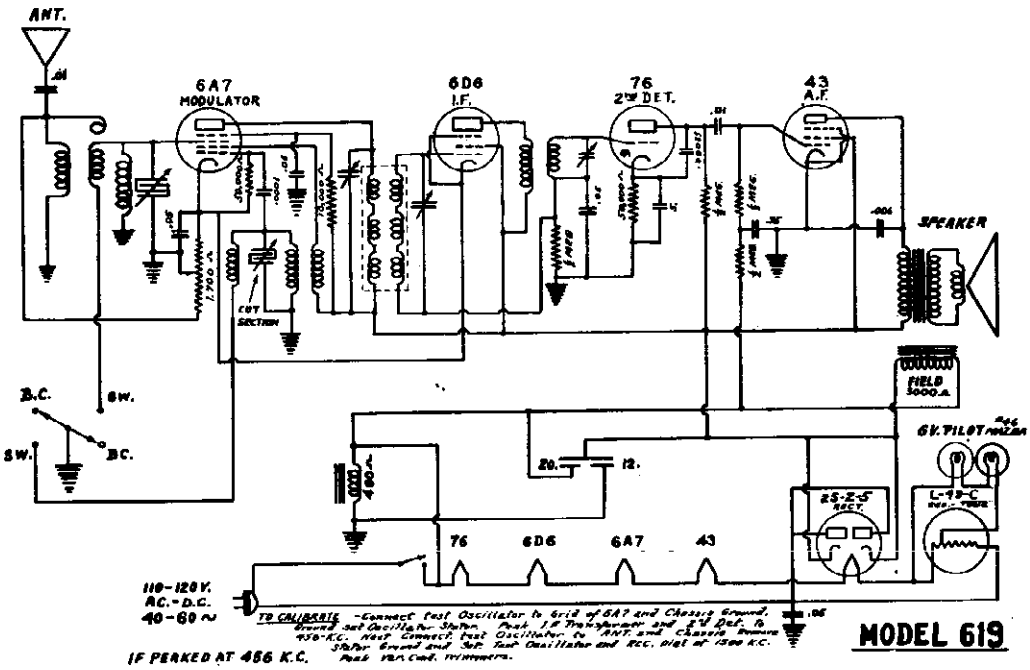

MODEL 619

DEWALD RADIO

MODELS 618, 618LW
MODELS 620, 620LW
Schematics
Alignment

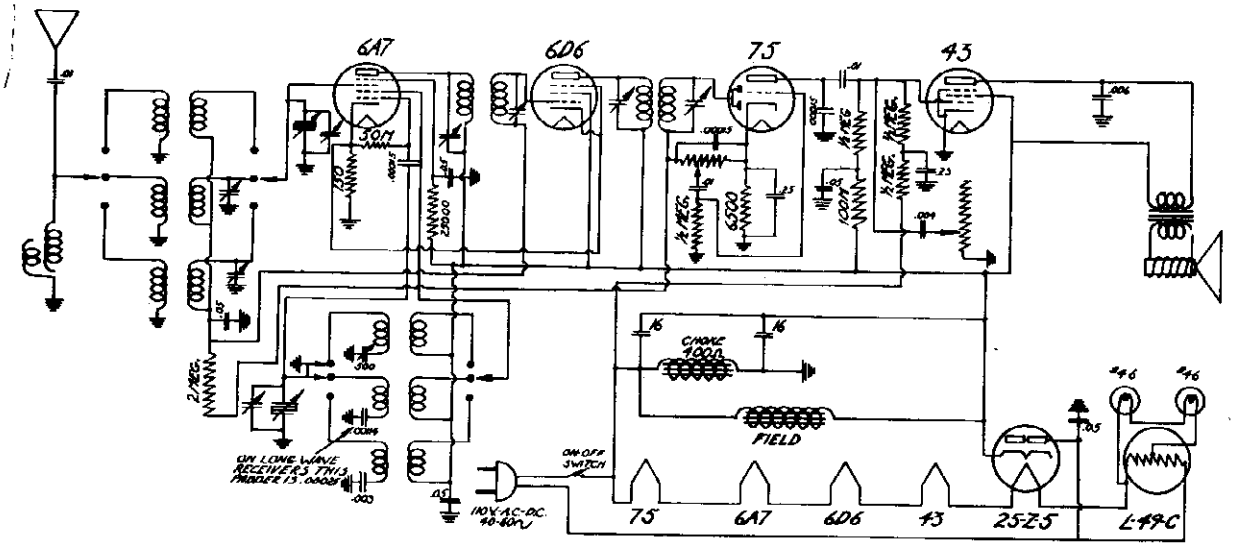

SERVICE NOTES

I.F. ALIGNMENT- Intermediate Frequency Peaked At 456 K.C. Connect Test Oscillator To Grid Of 6A7 And Chassis. Short Circuit Stator Of Front Section Of Variable Condenser During This Operation. Then Peak I.F. Trimmers For Maximum Signal.

R.F. ALIGNMENT- Remove Short From Stator Of Variable Condenser. Turn Wave Band Switch To Broadcast. Connect Test Oscillator To Antenna And Chassis. Set Test Oscillator And Radio Dial To 1500 K.C. And Peak Var. Cond. Trimmers For Maximum Signal. Set Test Oscil. At 600 K.C. And Adjust Padder Condenser In Front Of Chassis For Max. Signal. During This Operation The Var. Cond. Must Be Rocked Rapidly 1500 K.C.

POLICE BAND ALIGNMENT- Turn Wave Band Switch To Police Band Set Test Osc. And Radio Dial To 4000 K.C. And Peak Trimmers Near Front Of Chassis For Max. Sig. The Low Freq. Setting Is Automatically Adjusted By A Fixed Calibrated Padder. If Receiver Has Long Waves Instead Of Police Band Calibrate Same Trimming Cond. As On Police Band But Set Oscillator And Receiver At 300 K.C. For Alignment.

SHORT WAVE ALIGNMENT- Turn W.B. Switch To Short Wave. Set Test Osc. And Radio Dial To 15 Megacycles And Peak Trimmers Near Center Of Chassis For Max. Sig. Low Freq. Setting Is Automatically Taken Care Of By Short Wave Coils Which Are Carefully Matched For This Setting By A Fixed Calibrated Padder.

MODEL-618

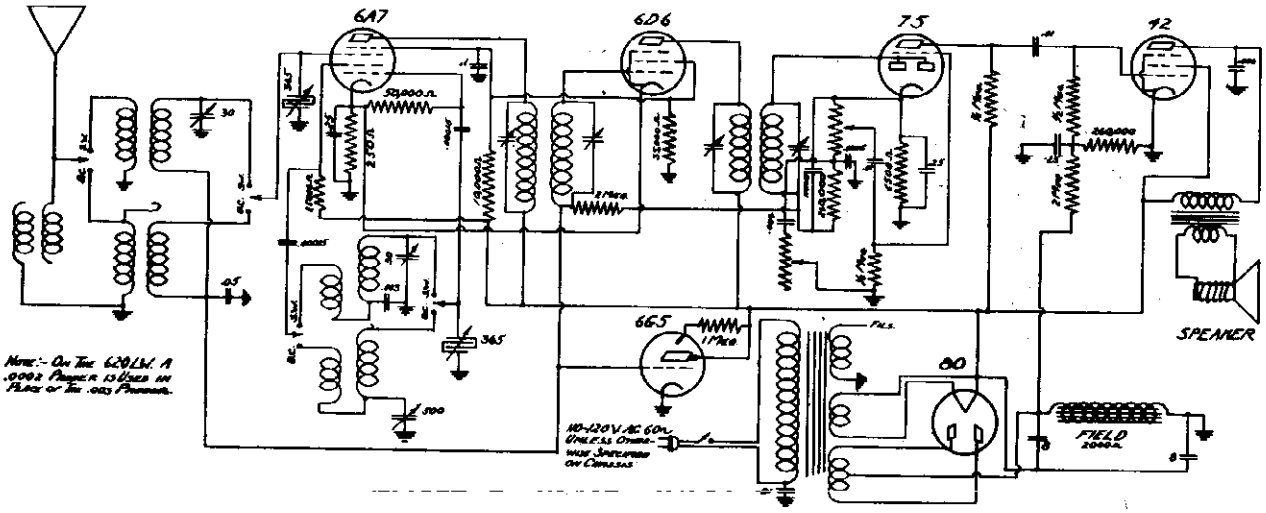

SERVICE NOTES

I.F. ALIGNMENT- Intermediate Frequency Peaked At 455 K.C. Connect Test Osc. To Grid Of 6A7 And Chassis. Short Circuit Stator Of Front Section Of Var. Cond. During This Operation. Then Peak I.F. Trimmers For Maximum Signal.

R.F. ALIGNMENT- Remove Short From Stator Of Var. Cond. Turn Wave Band Switch To Broadcast. Connect Test Osc. To Antenna And Chassis. Set Test Oscil. And Radio Dial To 1500 K.C. And Peak Var. Cond. Trimmers For Max. Signal. Set Test Oscil. At 600 K.C. And Adjust Padder Cond. On Top Of Chassis For Max. Signal. During This Operation The Var. Cond. Must Be Rocked Readjust 1500 K.C.

SHORT WAVE ALIGNMENT- Turn W. B. Switch To Short Wave Set Test Oscil. And Radio Dial To 15 Megacycles And Peak Trimmers Near Center Of Chassis For Max. Signal. Low Frequency Setting Is Automatically Taken Care Of By Short Wave Coils Which Are Carefully Matched For This Setting By A Fixed Calibrated Padder.

L.W. ALIGNMENT- Turn W.B. Switch To L.W. Set Osc. And Radio At 300 KC And Peak The L.W. Trimmers Then Set Osc. And Radio To 175 K.C. And Adjust Padder Cond. Receive 300 K.C.

MODEL 620 620-L.W.

Part # 7207

©John T. Dickey Publishing

MODELS 621, 621LW
Schematic
Alignment, Notes

DEWALD RADIO

SHORT WAVE TUNING

In tuning stations on the short waves, great care must be exercised in tuning as the receiver acts very selectively. A station may be tuned in and out within a fraction of a degree on the dial and for this reason it is necessary that the receiver be tuned carefully. An example of the care required may be obtained when one considers that in one dial division there may be as many as five stations.

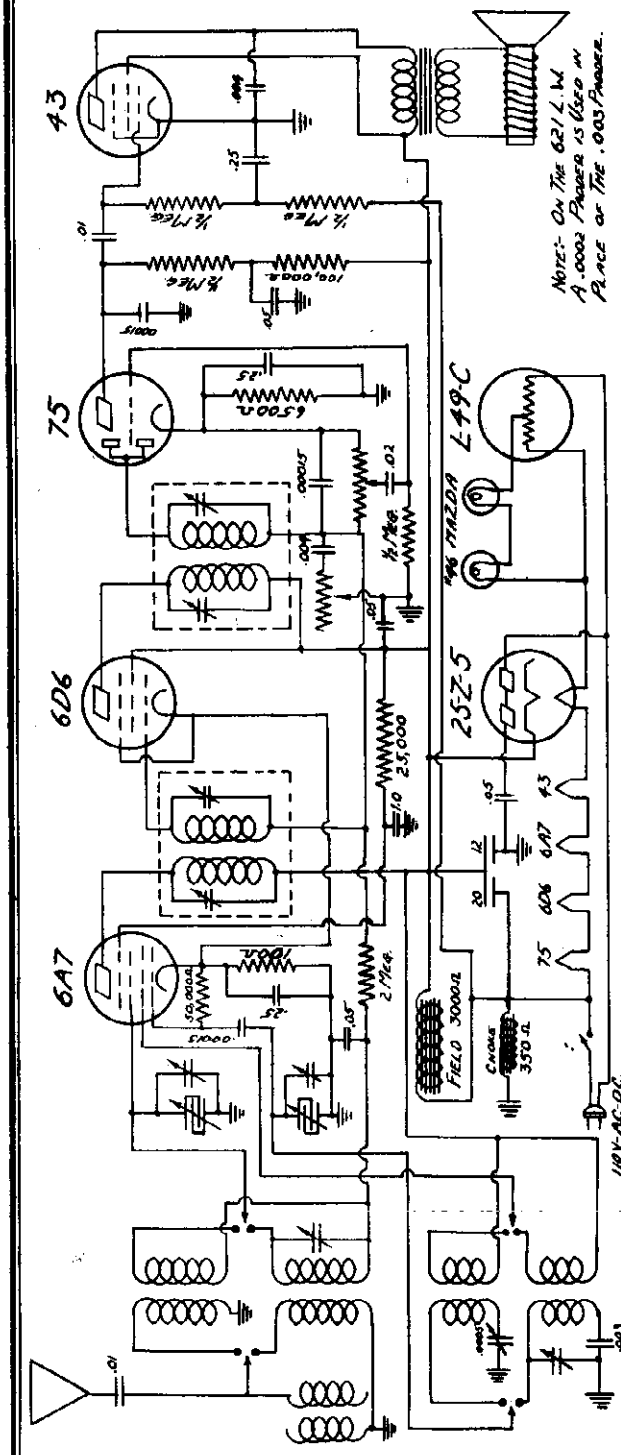

These receivers are six tube dual wave superheterodyne with full automatic volume control on both wave bands. They are designed to operate on 110-120 volts 40-60 cycles alternating current or direct current, unless otherwise specified on rear of chassis.

RANGES:
The Model 621 has the following ranges:
550-1700 K.C. (550-178 meters) and
17 - 55 M.C. (18-55 meters)
The Model 621 L.W. has the following ranges:
550-1700 K.C. (550-178 meters and 140-350 K.C.)

ANTENNA
An Antenna of 50 to 100 feet should be connected to the red lead extending from rear of chassis. The antenna should be kept as far away as possible from obstructions, such as electric power lines, telephone lines, or other antenna. For best results it is necessary to have a secure ground connection made to a water or other grounded pipe.

BROADCAST OPERATION
Turn the radio on by rotating the left hand knob toward the right. The volume of the radio is adjusted by this same knob. Turn the lower center knob to the right and tune the receiver by manipulating the top knob and making use of the outer figures on the dial scale.

SHORT WAVE OPERATION
Turn the lower center knob to the left. On this band, the center figures on the dial scale should be noticed. Due to the sharpness of tuning on short wave it is necessary to tune slowly and have the volume control turned on "full" to avoid passing over stations.

LONG WAVE RECEPTION
The 621 L.W. has Long Wave in place of Short Wave band. Follow the same instructions as for Short Wave reception but use inner row of figures.

TONE CONTROL
The tone control is the knob to the right. Various degrees of tone can be obtained by merely adjusting this control.

©John F. Rider. Publisher

DEWALD RADIO

MODELS 804, 8045, 805A, 805C
Schematic, Parts & Voltage

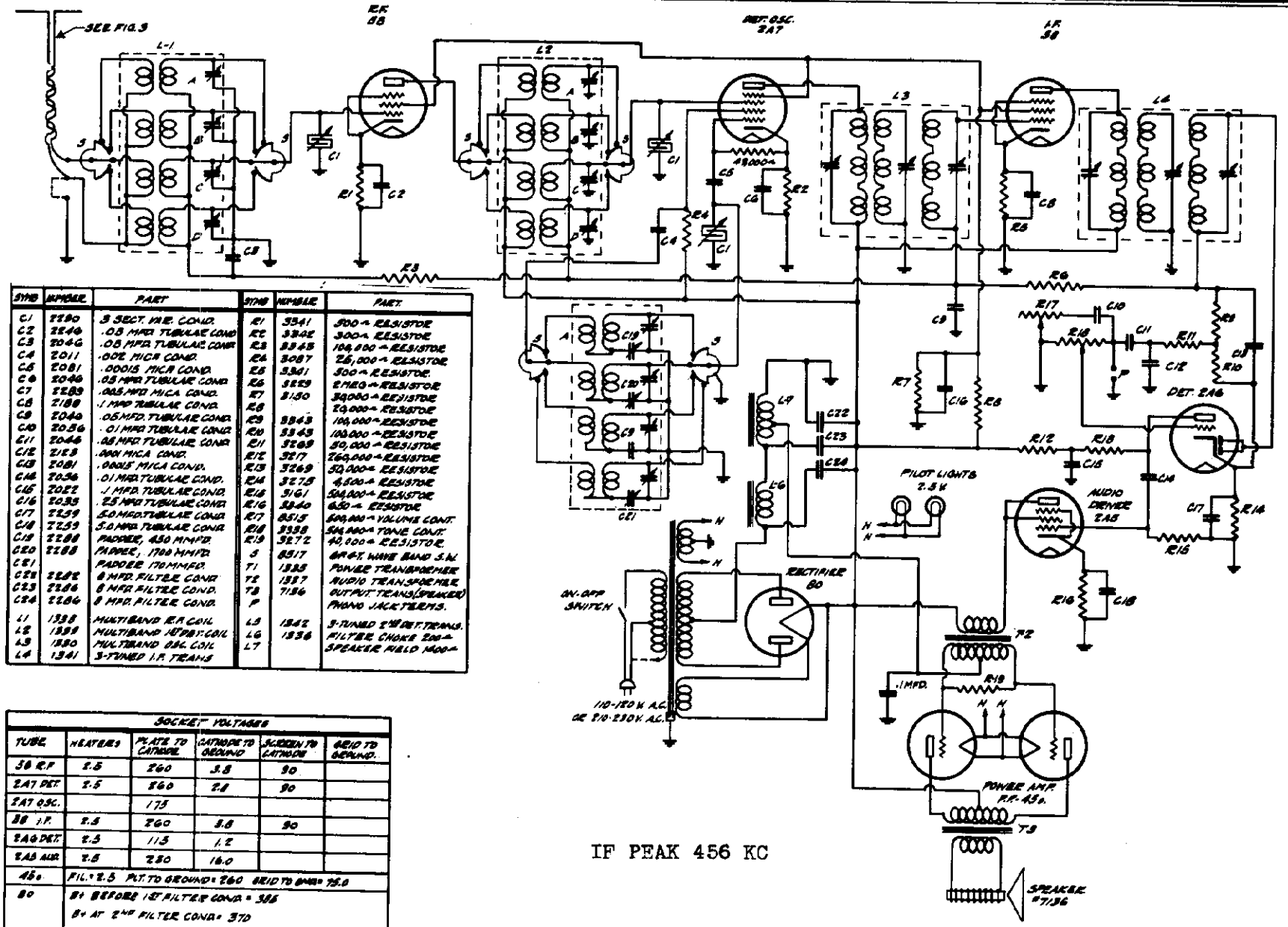

SYMB	NUMBER	PART
C1	2190	.3 SECT. VAR. COND.
C2	2240	.05 MFD. TUBULAR COND
C3	2046	.05 MFD. TUBULAR COND
C4	2011	.002 MICA COND.
C5	2081	.00015 MICA COND.
C6	2046	.05 MFD TUBULAR COND.
C7	2089	.005 MFD MICA COND.
C8	2188	.1 MFD TUBULAR COND.
C9	2040	.05 MFD. TUBULAR COND.
C10	2036	.01 MFD TUBULAR COND.
C11	2046	.05 MFD. TUBULAR COND.
C12	2183	.0001 MICA COND.
C13	2081	.00015 MICA COND.
C14	2036	.01 MFD. TUBULAR COND.
C15	2022	.1 MFD. TUBULAR COND.
C16	2035	.25 MFD TUBULAR COND.
C17	2239	.50 MFD. TUBULAR COND.
C18	2259	5.0 MFD. TUBULAR COND.
C19	2280	PADDER, 450 MMFD.
C20	2288	PADDER, 1700 MMFD.
C21		PADDER 170 MMFD.
C22	2282	8 MFD. FILTER COND.
C23	2286	8 MFD. FILTER COND.
C24	2286	8 MFD. FILTER COND.
L1	1338	MULTIBAND R.F. COIL
L2	1339	MULTIBAND 1ST DET. COIL
L3	1330	MULTIBAND OSC. COIL
L4	1341	3-TUNED I.F. TRANS

SYMB	NUMBER	PART
R1	3341	500 Ω RESISTOR
R2	3342	300 Ω RESISTOR
R3	3345	100,000 Ω RESISTOR
R4	3087	25,000 Ω RESISTOR
R5	3341	500 Ω RESISTOR
R6	3329	2 MEG Ω RESISTOR
R7	3150	30,000 Ω RESISTOR
R8		20,000 Ω RESISTOR
R9	3343	100,000 Ω RESISTOR
R10	3343	100,000 Ω RESISTOR
R11	3269	50,000 Ω RESISTOR
R12	3217	250,000 Ω RESISTOR
R13	3269	50,000 Ω RESISTOR
R14	3275	4,500 Ω RESISTOR
R15	3161	500,000 Ω RESISTOR
R16	3340	650 Ω RESISTOR
R17	3515	500,000 Ω VOLUME CONT.
R18	3338	5M, 150 Ω TONE CONT.
R19	3272	40,000 Ω RESISTOR
S	3517	BAND S.W.
T1	1335	POWER TRANSFORMER
T2	1337	AUDIO TRANSFORMER
T3	7136	OUTPUT TRANS. (SPEAKER)
P		PHONO JACK TERMS.
L5	1342	3-TUNED 2ND DET. TRANS.
L6	1336	FILTER CHOKE 200 Ω
L7		SPEAKER FIELD 1400 Ω

SOCKET VOLTAGES					
TUBE	HEATERS	PLATE TO CATHODE	CATHODE TO GROUND	SCREEN TO CATHODE	GRID TO GROUND
58 R.F.	2.5	260	3.8	90	
2A7 DET.	2.5	260	2.8	90	
2A7 OSC.		175			
58 I.F.	2.5	260	3.8	90	
2A6 DET.	2.5	115	1.2		
2A5 AUD.	2.5	230	16.0		
45's	FIL. = 2.5 PLT. TO GROUND = 260 GRID TO GND. = 75.0				
80	B+ BEFORE 1ST FILTER COND. = 385 B+ AT 2ND FILTER COND. = 370 B+ AT OUT PUT OF FILTER = 260				

IF PEAK 456 KC

MODELS 804, 804S 806A, 805C Alignment, Socket Trimmers, Data

The Models 804 and 805 are all wave superheterodyne receivers designed to operate on 110-120 or 210-220 volts, alternating current, 50-60 cycles only. The primary tap on top of the power transformer must be connected properly for the voltage to be used.

Before plugging into the power line, make sure that the line voltage and current frequency agree with the above. If doubt exists regarding the exact power line conditions, consult your local power Company.

Check the tubes to be certain that they are securely pushed into their respective sockets, and that the grid clips on top of the tubes are firmly in place. Also check the speaker plug to see that it is securely pushed into its socket at the rear of the Chassis.

TUBES 2-56s. 1-2A7, 1-2A6, 1-2A5, 2-45s, 1-80

INSTALLATION This receiver is arranged for a "Doublet" Antenna system, or an ordinary single wire system. For connections of either type see Fig. #3a & 3B. A good Antenna is essential for the correct operation of this receiver, especially where distant reception is expected. The flat top portion of the Antenna should be placed as high as possible above the ground and surrounding objects. No. 14 solid or stranded wire may be used for the flat top portion and well insulated semi-flexible wire for the lead-in section. The Antenna should be equipped with good insulators wherever they are required. Material such as pyrex, glass, Bakelite, and high grade porcelain are well suited for radio installations. The lead-in wire should be kept away from all nearby wires and should be run at right angles to power or trolley lines wherever possible. It should be brought into the house at the nearest point convenient to the receiver in order to avoid picking up noise from home electrical devices. The ground wire should be as short as possible and must be a good connection to water or other grounded pipe.

BAND SWITCH This switch is located on the left side of front panel and its position is indicated by the letters engraved into the knob. (A-B-C-D)

BAND "A" Standard Domestic Broadcast band. Frequency range from 540 to 1800 K.C.

BAND "B" Intermediate Short wave Band. Broadcast Frequency range from 1600 K.C. to 5500 K.C. Services operating on this band are: Police, Aeroplane, Television, and Amateur. Reception on this band is reliable for moderate distances during both day and night, but for distances greater than 1000 miles the area must be in darkness.

BAND "C" Short Wave Band. Frequency range 5.4 to 18 megacycles. Services operating on this band include: Domestic and Foreign Short wave Broadcasting, Aeroplane, Amateur, Commercial Code and Telephone, and Experimental. Stations in the vicinity of 18 to 12 Megacycles are best received when the distance between transmitter and receiver is greater than 1500 miles and the area between is in Daylight. This same holds true for stations about 10 to 12 Megacycles except that signals are often heard in the early hours of darkness. Stations operating on frequencies between 10 and 7 megacycles offer reliable reception both day and night, especially when the distance is greater than 700 miles. Reliable reception on frequencies below 7 megacycles, when the distance exceeds 1500 miles, may be expected when the area between receiver and transmitter is in darkness.

BAND "D" Long wave Band. Frequency range 140 K.C. to 400 K. C. (Model 805 only) This band includes the European long wave Broadcast band, (Heard in Europe only) Domestic Aviation Beacons, weather Reports and Commercial Code.

BAND SPREAD DIAL This receiver is provided with a dual station selector drive, to permit micrometer tuning which is especially valuable on the short waves where band spreading or its equivalent, high ratio tuning, becomes necessary for easy and rapid registering of foreign programs.
The large knob of the main selector drive is the low ratio control with a normal ratio of 24 to 1 in 360°. The small knob on the same shaft controls the high ratio control with a tuning ratio of 125 to 1 in 360°. Bands "A" and "B" are calibrated in kilocycles and Band "C" in megacycles. The Small Band Spread Indicator may be used to make fine adjustments not obtainable from the larger scale.

PHONOGRAPH PICKUP It is also possible to use this receiver with an electric phono pickup attachment for the reproduction of disc. recordings. For this purpose, a Phono Jack is located at the rear of the Chassis. The volume Control will control the strength of signals for phonograph reproduction (any high impedence pickup of high quality may be used with this receiver.)

SERVICE NOTES

REALIGNMENT The procedure outlined below should be followed should the receiver require realignment. For location aligning trimmers and padders, see Fig. 2.

I. F. ALIGNMENT To align the Intermediate Frequency stages, first place the wave Band Switch in Pos. "A" and Short Circuit the Oscillator Section of the Variable Condenser. Set the test Oscillator to 456 K.C. and connect its output through A .00025 MFD fixed Condenser to the grid cap of the 2A7 Tube and chassis ground. Adjust the six I. F. Compensators (Three on each I.F. Transformer) for Max Signal. (Volume Control must be in maximum position during all adjustments. Use the least possibe input to the receiver to prevent broadening of the resonance peaks.)

BAND "A" (BROADCAST) ALIGNMENT After the Intermediate Frequency stages have been completely aligned, connect external test oscillator to the Antenna and Ground binding posts of the set. See Fig. 3-A. Set the band switch to "A" position. Set test Oscillator to 1500 K.C. and adjust the three band A Compensators for maximum gain. Next, set dial at 600 K.C. and adjust Band "A" Paddler for maximum signal, rocking Variable Condenser at the same time. Now repeat repeaking operation at 1500 K. C.

BAND "B" ALIGNMENT Turn wave Band Switch to "B" position and set Variable Condenser to 5000 K. C. Adjust test oscillator to this frequency and adjust 3 Band "B" Trimmers for maximum gain. Next set dial at 1900 K. C. and adjust band "B" Paddler for maximum signal. Now repeat repeaking operation at 5000 K. C.

BAND "C" (SHORT WAVE) ALIGNMENT Turn wave Band Switch to "C" position and set Variable Condenser to 16 megacycles. Adjust test oscillator to this frequency and adjust three band "C" Trimmers.

BAND "D" (LONG WAVE) ALIGNMENT Turn wave Band Switch to "D" position and align trimmers on long wave coils at 375 K.C. Adjust Band "D" Padder at 160 K. C.

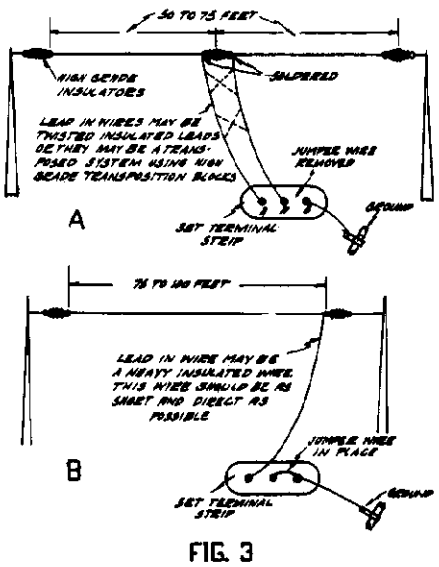

FIG. 3

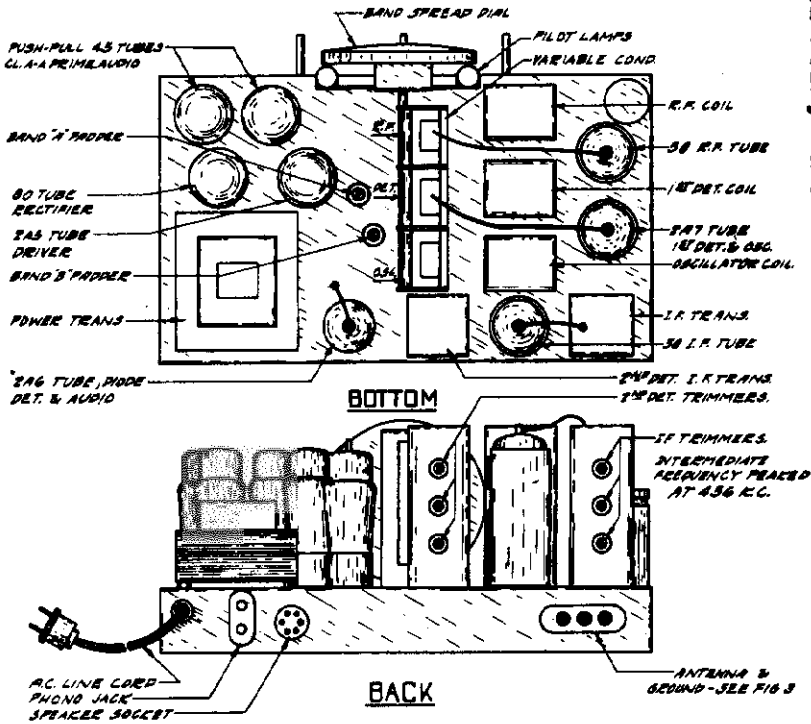

FIG. 2

TONE CONTROL The Tone Control Knob is located directly below the main Tuning Knob. By adjusting this knob the user may select any tone shading desired from mellow to brilliant. The Tone Control may also be used to reduce background noise on signals that are accompanied by excessive disturbances such as static and local electrical noise.

VOLUME CONTROL AND ON-OFF SWITCH To place receiver in operation turn the "Volume Control Knob" to the right. To increase volume rotate to the right; to decrease rotate to the left. The receiver is also equipped with an automatic volume control feature which tends to maintain all reception at a constant level, thereby reducing fading effects and blasting of strong signals.

©John F. Rider, Publisher

DEWALD RADIO

MODEL 609, Late
MODEL 1100, Early
Schematics

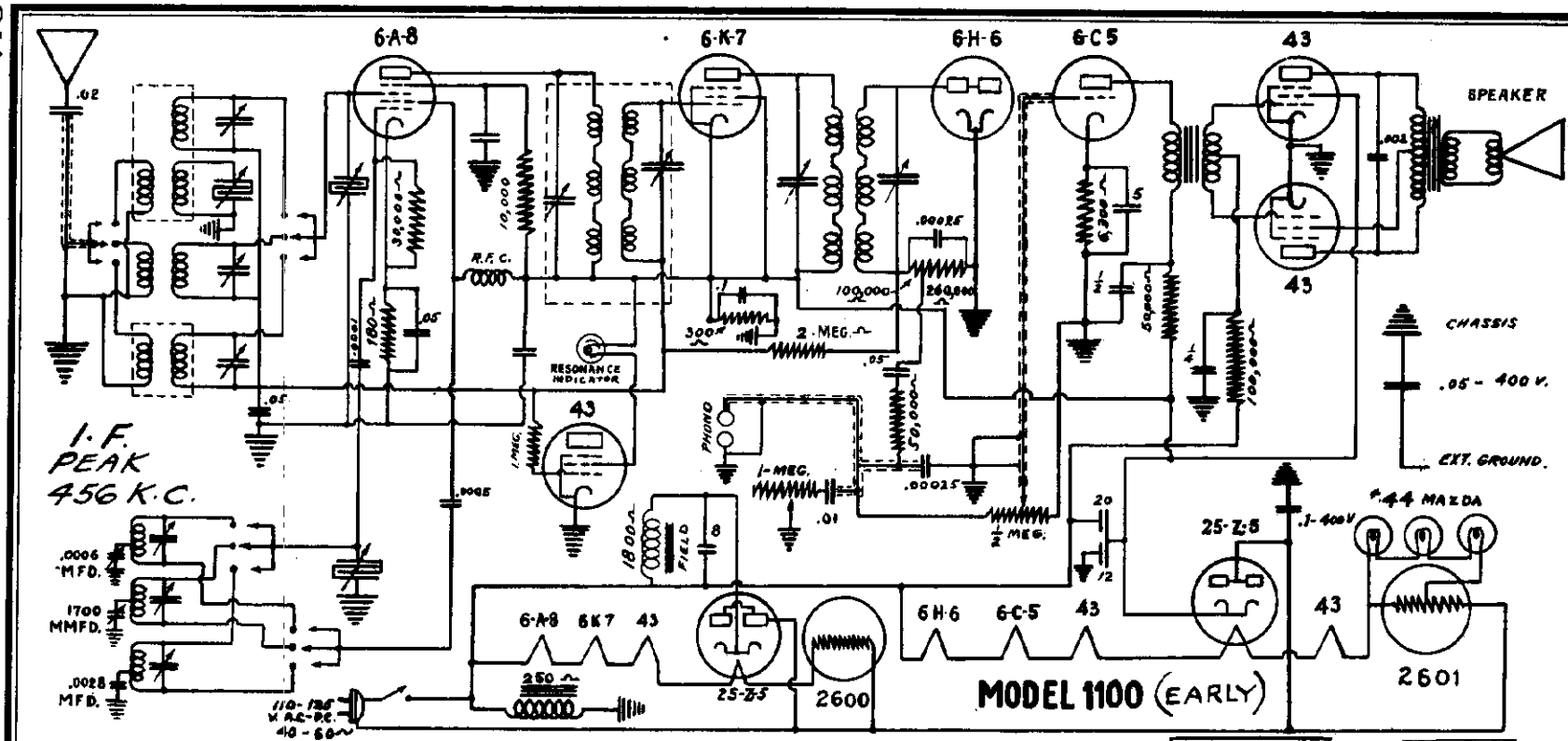

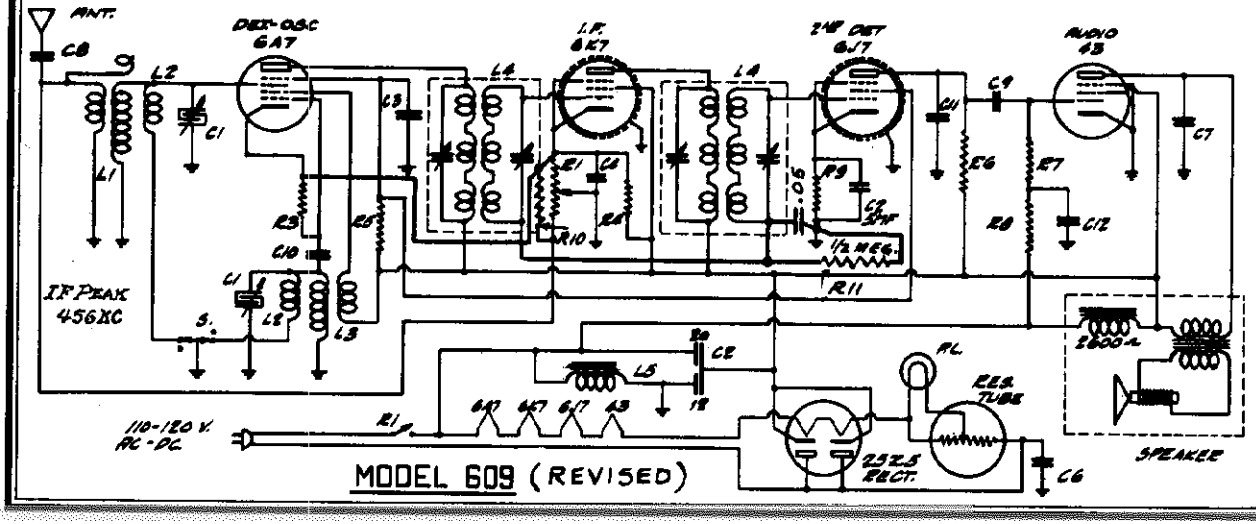

CONDENSERS		
SYM	MFD.	NO.
C1	VAR.	2895
C2	20-12-5	2894
C3	.05	2046
C4	.05	2046
C5	.05	2046
C6	.05	2046
C7	.004	2054
C8	.02	2191
C9	.02	2191
C10	.0001	2123
C11	.0001	2123
C12	.1	2022

RESISTORS		
SYM	OHMS.	NO
R1	WL.CONT.	8474
R2	300	3946
R3	50,000	3292
R4	50,000	3292
R5	35,000	3180
R6	.5 MEG.	3161
R7	.15 MEG.	3145
R8	1. MEG.	3190
R9	85,000	3180
R10	3,000	
R11	.5 MEG.	

COILS		
SYM	NAME	NO.
L1	ANT. COIL	1331
L2	SHUNT COIL	1365
L3	OSC. COIL	1354
L4	I.F. TRANSFORMER	1356
L5	CHOKE 400~	1348

MISC.		
PL.	PILOT LAMP 6.3V.	8019
R1	VOL. CONT. & SWITCH	8474
S	WAVE BAND SWITCH	8521
	SPEAKER	7172
	LINE CORD	8496

MODEL 1100, Late

Schematic Data

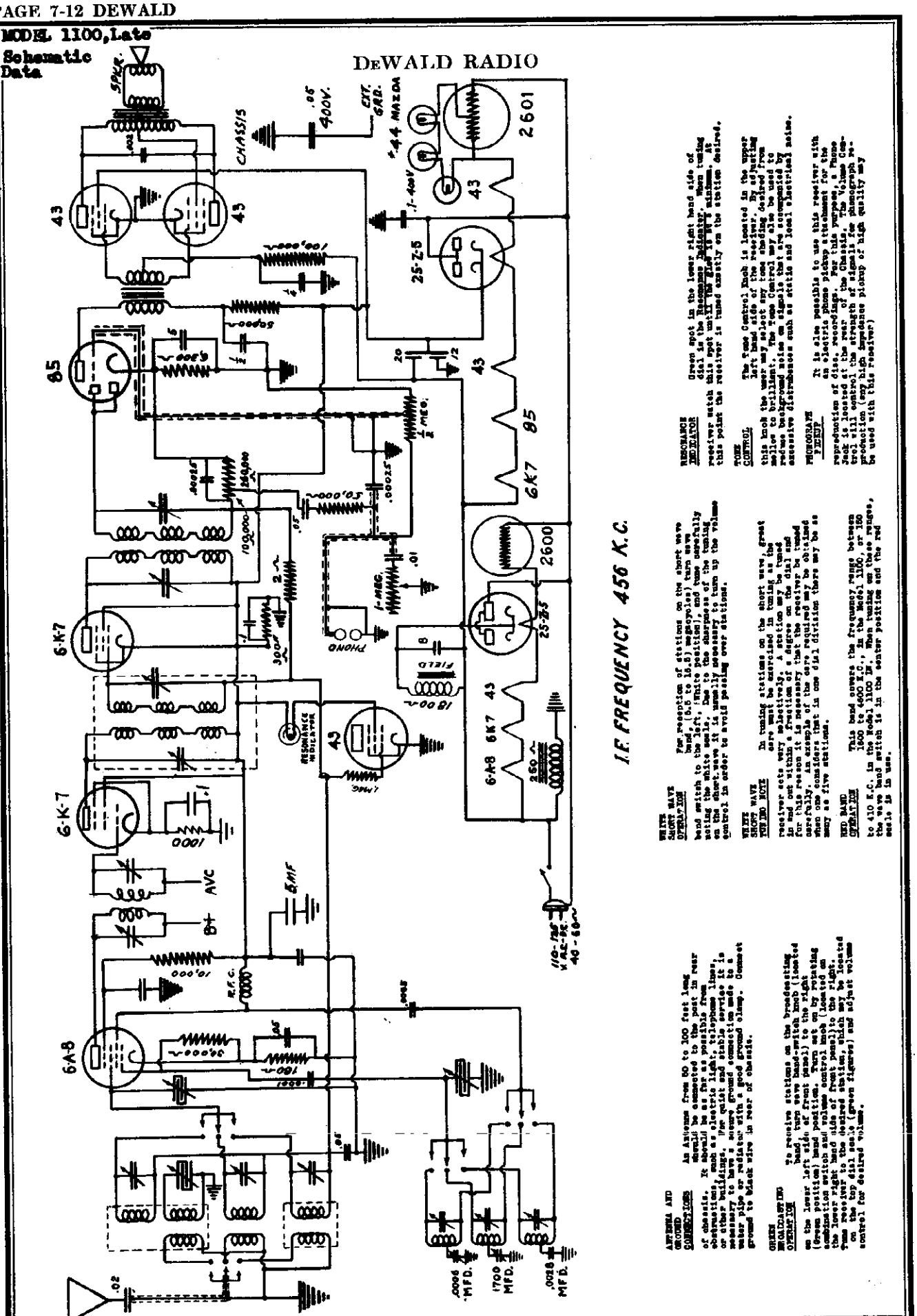

EMERSON RADIO & PHONO. CORP.

MODELS 34F7, 101F7
Chassis F7
Schematic

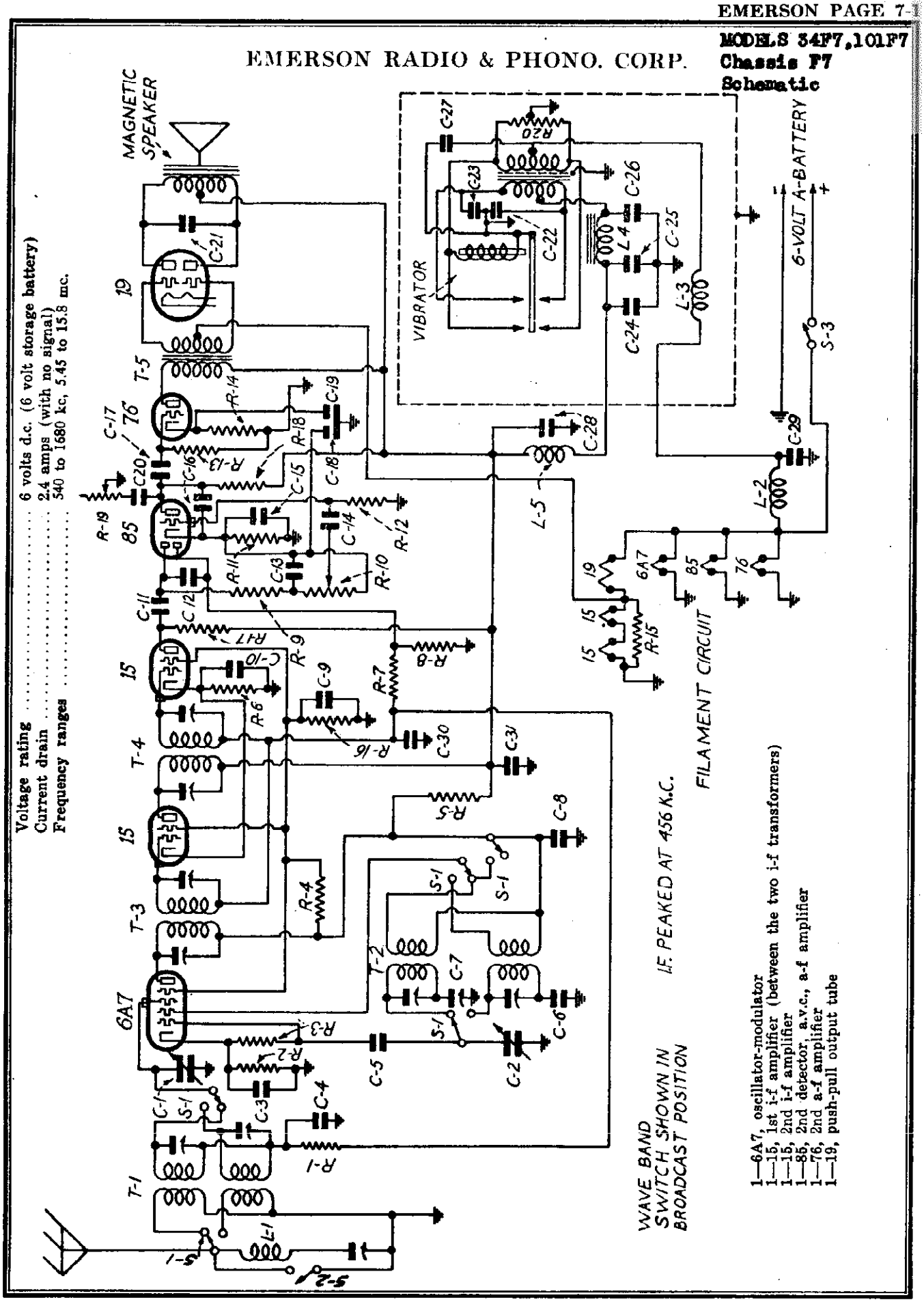

Voltage rating ..... 6 volts d.c. (6 volt storage battery)
Current drain ..... 2.4 amps (with no signal)
Frequency ranges ..... 540 to 1680 kc, 5.45 to 15.8 mc.

1—6A7, oscillator-modulator
1—15, 1st i-f amplifier (between the two i-f transformers)
1—15, 2nd i-f amplifier
1—85, 2nd detector, a.v.c., a-f amplifier
1—76, 2nd a-f amplifier
1—19, push-pull output tube

©John F. Rider, Publisher

ADJUSTMENTS

An oscillator with frequencies of 456, 600, 1600 and 15,000 kc is required.

In aligning the broadcast coils use, as a dummy antenna, a .002f condenser in series with the test oscillator antenna lead. In aligning the short-wave coils a non-inductive 400 ohm resistor should be used as a dummy antenna.

An output meter should be used across the voice coil or output transformer for observing maximum response.

Location of Coils and Trimmer Adjustments

The two i-f transformers are located on top of the chassis deck. The first i-f is the one closer to the front.

The broadcast and short-wave antenna coils are wound on one form and mounted vertically on top of the chassis deck, directly in front of the first i-f transformer. The trimmers for these two coils are mounted on a strip which is attached to the coil tubing. The lower trimmer is for the short-wave antenna coil and the upper trimmer is for the broadcast antenna coil.

The broadcast and short-wave oscillator coils are wound on one form and mounted with the trimmer assembly against the inside of the right-hand chassis wall. The trimmer screws are accessible through two holes in the chassis. The trimmer closer to the front is for the short-wave oscillator coil. The trimmer closer to the rear is for the broadcast oscillator coil.

The adjustable 456 kc wave trap is also mounted on the inside of the right-hand chassis wall. The trimmer for this wave trap is accessible through a hole in the rear wall of the chassis.

The broadcast series padder is mounted on the inside of the front chassis wall with the adjusting screw accessible through a hole in the chassis. There is no adjustable padder for the short-wave band.

I-f and Wave-trap Alignment

Rotate the wave-band switch (extreme right-hand control) to the broadcast position, clockwise. Rotate the variable condenser to the minimum capacity position and feed 456 kc to the grid cap of the 6A7 tube. Adjust the four i-f trimmers (at the tops of the cans) for maximum response. Feed 456 kc through the antenna and adjust the wave trap (through hole in rear of chassis) for *minimum response*.

Broadcast Alignment

With the wave-band switch in the broadcast position, set the dial pointer to 600, feed 600 kc to the antenna through a dummy antenna and adjust the broadcast series padder (on front wall) for maximum response. Move the pointer to 1600, feed 1600 kc to the antenna and adjust the broadcast oscillator trimmer (on right wall, closer to rear) for maximum response and then adjust the broadcast antenna trimmer (top trimmer on antenna coil) for maximum response. Return pointer to 600, feed 600 kc and readjust the broadcast series padder, rocking the variable condenser (rotate condenser shaft back and forth through small arc) for maximum response. Return to 1600 kc again and check the alignment.

Short-wave Alignment

Rotate the wave-band switch to the short-wave position, counter-clockwise. Set the dial pointer a little below 15 and feed 15,000 kc to the antenna, using a 400 ohm dummy antenna. Adjust the short-wave oscillator trimmer (closer to front on right wall) for maximum response, choosing the *minimum capacity* peak, and then adjust the short-wave antenna trimmer (lower trimmer on antenna coil) for maximum response, choosing the *maximum capacity* peak. (See General Instructions below.)

GENERAL INSTRUCTIONS

The set's oscillator is higher in frequency than the signal, so images should be observed on the low frequency side of the signals.

Always choose the minimum capacity peak on oscillator trimmers and maximum capacity peaks on antenna trimmers. The last motion in adjusting trimmers should always be a tightening one, not a loosening one.

Never leave a trimmer with the outside plate so loose that there is no tension on the screw. Either bend the plate up or remove the screw entirely. Loose screws are a sure source of noise and drifting.

In aligning antenna trimmers on the high frequency signals there is always a tendency for the oscillator to drift, due to interlocking. To compensate for this always keep tuning the variable condenser as you adjust the trimmers.

Always use as weak a test signal as possible during alignment.

VOLTAGE ANALYSIS

Readings should be taken with a 1000 ohms-per-volt meter. Voltages listed below are from point indicated to ground (chassis) with volume control turned on full and no signal. The battery voltage for these readings was 6.1 volts.

Tube	*Plate*	*Screen*	*Cathode*	*Osc. Plate*	*Fil.*
6A7	95	63	3.0	95	6
15	167	63	1.8	—	2
15	114	63	1.8	—	2
85	53	—	5.5	—	6
76	150	—	5.7	—	6
19	153	—	—	—	2

Voltage from each control grid of the 19 tube to ground—4 volts.

With an input of 6.0 volts and 1.6 amperes the output of the power pack should be approximately 140 volts at .040 amperes.

GENERAL NOTES

The large, oblong metal box on the top of the chassis deck contains the power pack. The function of this power pack is to convert the 6 volt direct current from the storage battery into 140 volt direct current. The vibrator used is of the synchronous type.

REPLACEMENT PARTS

*Item No.	Part No.	DESCRIPTION	List Price Ea. Effective as of Sept. 1st, 1935 PRICE
L1	MMT-149	Adjustable 456 kc wave trap	$ .35
L2	OOT-167	R-f "A" choke	.20
L3	2RT-240	R-f "A" choke	.45
L4	2RT-239	Iron-core filter choke—800 ohms	.80
L5	OOT-166A	R-f "B" choke (1 millihenry)	.30
T1	2RT-234	Two-band antenna coil	1.30
T2	2RT-235	Two-band oscillator coil	1.30
T3	2RT-236	456 kc first i-f transformer	1.15
T4	2RT-237	456 kc second i-f transformer	1.15
T5	2RT-232	Audio transformer	1.00
T6	2RT-233	Power transformer	2.75
R1, R12	KR-55	250,000 ohm ¼ watt carbon resistor	.16
R2	FFR-123	650 ohm ½ watt wire-wound resistor	.16
R3	KR-53	50,000 ohm ¼ watt carbon resistor	.16
R4, R5	LR-65	10,000 ohm ¼ watt carbon resistor	.16
R6	FFR-126	500 ohm ½ watt wire-wound resistor	.16
R7, R13	KR-67	1 megohm ¼ watt carbon resistor	.16
R8	KR-56	500,000 ohm ¼ watt carbon resistor	.16
R9, R15	KR-54	100,000 ohm ¼ watt carbon resistor	.16
R10, S8	2ER-209	Volume control with line switch—0.5 megohms	.80
R11	LR-60	20,000 ohm ¼ watt carbon resistor	.16
R14	FR-79	1,000 ohm ¼ watt carbon resistor	.16
R15	LLR-147	100 ohm ½ watt wire-wound resistor	.16
R16	LLR-154	75,000 ohm ¼ watt carbon resistor	.16
R17	OR-73	25,000 ohm ¼ watt carbon resistor	.16
R19	2ER-210	Tone control—250,000 ohms	.55
R20	ZR-105	200 ohm wire-wound center tapped resistor	.16
C1, C2	XXC-187	Two-gang variable condenser	2.15
C3, C4, C9, C10, C30, C31	AC-6	0.1 mf, 200 volt tubular condenser	.16
C5	EC-24A	0.0001 mf mica condenser	.16
C6	AAC-111	0.003 mf mica condenser	.16
C7	2EC-198	Single adjustable padding condenser Range—200 to 400 mmf	.30
C8	BC-13	0.25 mf, 200 volt tubular condenser	.16
C11, C12, C14, C16	AC-7A	0.00025 mf mica condenser	.16
C13	CCC-127	0.01 mf, 200 volt tubular condenser	.16
C15	BC-12	0.06 mf, 200 volt tubular condenser	.16
C17	FC-29	0.02 mf, 200 volt tubular condenser	.16
C18, C19	2EC-224	Dual 5 mf, 25 volt dry electrolytic condenser block	.75
C20, C21	HC-24	0.006 mf, 600 volt tubular condenser	.16
C22, C23	2TC-189	0.015 mf, 1000 volt tubular condenser	.16
C24	EEC-132	0.1 mf, 400 volt tubular condenser	.16
C25, C26	2EC-227	Multiple 6 and 10 mf, 200 volt dry electrolytic condenser C25—10 mf, 200 volt C26— 6 mf, 200 volt	2.00
C27	2EC-226	0.5 mf, 120 volt tubular condenser	.40
C28	2EC-249	Tubular 8 mf, 200 volt dry electrolytic condenser	.35
C29	EC-19	0.5 mf, 200 volt tubular condenser	.25
	2ES-161	6" magnetic speaker	4.50
	2ES-155	10" magnetic speaker for console	5.75
S1	2KS-152	Wave-band switch	.90
S2	OOS-108A	Local-distance switch	.12
	2KD-36	Airplane dial	1.75
	2NZ-906	Escutcheon with crystal	.50
	2EV-6	Synchronous vibrator	2.80
	2TM-211	Escutcheon reflector ring	.10

*Item number locates article on schematic diagram.

It is important to observe the proper polarity in connecting the battery to the receiver. The heavy red lead should be attached to the positive side of the battery. If the connections are reversed the vibrator and electrolytic condenser in the power pack will be seriously damaged.

The color coding of the leads of the i-f transformers is as follows:

Grid—green — Plate—blue
Grid return—black — B plus—red

With few exceptions the color coding of the general wiring is as follows:

Plate—blue — Cathode—white or yellow
B plus—red — Grid—green
Screen—brown — Filament and ground—black

The color coding of the leads of the power pack is as follows:

A plus—yellow B plus—red

The chassis is common negative for both the A and B supply.

©John F. Rider, Publisher

EMERSON RADIO & PHONO. CORP.

MODEL 101U
Chassis U68
Schematic

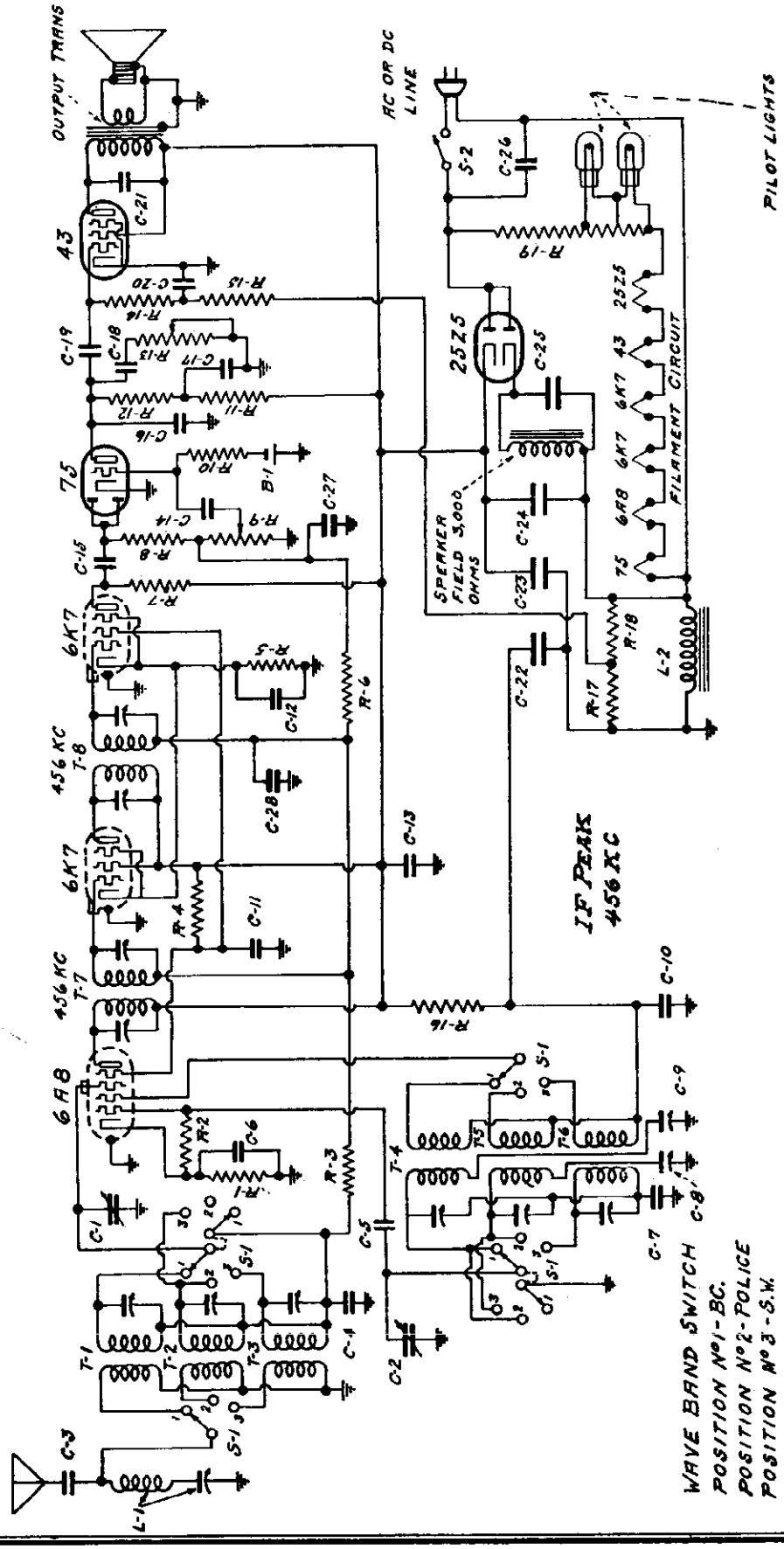

Voltage rating ..... 105-130 volts.
Current drain ..... 0.43 amps.
Frequency ranges ..... 540 to 1660 kc, 1580 to 4750 kc, 6.5 to 16 mc.

The tube complement is as follows:

1—6A8 (metal) Pentagrid oscillator-modulator
1—6K7 (metal) 1st i-f amplifier
1—6K7 (metal) 2nd i-f amplifier (adjacent to 75)
1—75 (glass) 2nd detector—a-f amplifier, a.v.c.
1—43 (glass) Power output pentode
1—25Z5 (glass) Half-wave rectifier

©John F. Rider, Publisher

ADJUSTMENTS

An oscillator with frequencies of 456, 600, 1600, 1700, 4500 and 15,000 kc should be used. In addition, an output meter should be used across the voice coil or output transformer for observing maximum response.

I-f Alignment

The i-f transformers XXT-188A and XXT-189A are located on the top of the chassis. The four trimmers, two for each i-f transformer, are located at the tops of the cans. Set the wave-band switch to broadcast (extreme clockwise position) and rotate variable condenser to minimum. Feed 456 kc to grid of the 6A8 tube and adjust the four i-f trimmers for *maximum response*. Then feed 456 kc through the antenna and adjust the wave-trap trimmer for *minimum response*. The trimmer is on the wave-trap, which is located on top of the chassis behind the antenna coil.

Location of Coils

The antenna coils for the three bands are wound on one form and mounted on top of the chassis to the right of the variable condenser. The three trimmers for these coils are mounted on a bakelite strip above the tubing. The trimmer nearest the front of the chassis is for the broadcast antenna coil. The central trimmer is for the police antenna coil and the trimmer furthest from the front of the chassis is for the short-wave antenna coil.

The oscillator coils for the three bands are wound on one form and mounted underneath the chassis deck directly behind the tone control. The three trimmers for these coils are mounted on a bakelite strip between the coil tubing and the chassis. The trimmers are accessible through three holes in the top of the chassis. The trimmer nearest the front of the chassis is for the short-wave oscillator coil. The central trimmer is for the police oscillator coil and the trimmer furthest from the front of the chassis is for the broadcast oscillator coil.

The dual adjustable padder is mounted underneath the chassis between the oscillator coil and the variable condenser with the adjusting screws accessible through two holes in the top of the chassis. The screw closer to the front is for the police band and the other screw is for the broadcast band. The short-wave band has no adjustable padder.

Broadcast Alignment

Set the wave-band switch to broadcast position (extreme clockwise) and dial pointer to 600. Feed 600 kc through antenna lead and adjust broadcast padder (on dual padder, closer to back of chassis) for maximum response. Set pointer to 1600, feed 1600 kc and adjust the broadcast-oscillator trimmer (to left of variable, furthest from front of chassis) for maximum response, and then the broadcast antenna trimmer (on antenna coil, nearest front of chassis). Return pointer to 600 and rock the variable condenser (rotate condenser back and forth through small arc) while adjusting the broadcast padder for maximum response. If a readjustment is necessary return to 1600 and realign the antenna and oscillator trimmers.

Police Alignment

Set the wave-band switch to police (central position), pointer to 1700 and feed 1700 kc through antenna lead. Adjust police band padder (on dual padder, closer to front) for maximum response. Set pointer to 4500 and feed 4500 kc. Adjust police band oscillator trimmer (to left of variable, central trimmer) for maximum response. If two peaks are heard, select the one of minimum capacity (see General Instructions below), then adjust police band antenna trimmer (central one on antenna coil) for maximum response, selecting the peak of maximum capacity. Again feed 1700 kc, with pointer at 1700, rock variable condenser and adjust police band padder for maximum response. Realign at 4500 if necessary.

Short-Wave Alignment

Set wave-band switch to counter-clockwise (short-wave) position and pointer at 15 megacycles. Feed 15,000 kc through antenna. Adjust short-wave oscillator trimmer (to left of variable, closest to front) for maximum response. If two peaks are obtained, select the one of minimum capacity.

Check all three bands for dead spots or incorrect alignment.

General Instructions

The set's oscillator is higher in frequency than the signal on all three bands. Images, therefore, should be observed on the low-frequency side of the signals.

Always choose the minimum capacity peak on oscillator trimmers and maximum capacity peaks on antenna trimmers. The last motion in adjusting trimmers should always be a tightening one.

Never leave a trimmer with the outside plate so loose that there is no tension on the screw. Either bend the plate up or remove the screw entirely. Loose screws are a source of noise, frequency drift and microphonism.

In aligning antenna trimmers on the high-frequency signals there is usually a tendency for the oscillator to drift, due to interlocking. To compensate for this, always keep re-tuning the variable condenser.

VOLTAGE ANALYSIS

Readings should be taken with a 1000 ohms-per-volt meter. Voltages listed below are from point indicated to ground (chassis). Line voltage for these readings was 117.5 volts, 60 cycles, a.c.

Tube	*Plate*	*Screen*	*Cathode*	*Osc. Plate*	*Fil.*
6A8	105	50	1.25	90	6
6K7 1st i-f	105	105	3.5	—	6
6K7 2nd i-f	62	50	3.5	—	6
75	57	—	0	—	6
43	92	105	0	—	24

Voltage across speaker field—114.

Voltage across filter choke—22

REPLACEMENT PARTS

PRICES ARE SUBJECT TO CHANGE WITHOUT NOTICE

*Item	Part No.	DESCRIPTION	List Price Effective as of Sept. 1st, 1939 PRICE
L1	MMT-149	Adjustable 456 kc wave trap	$ .35
L2	ZZT-196	Filter choke—500 ohms	.60
T1, T2, T3	ZZT-192A	Three-band antenna coil assembly	1.30
T4, T5, T6	ZZT-193	Three-band oscillator coil assembly	1.30
T7	XXT-188A	456 kc first i-f transformer	1.15
T8	XXT-189A	456 kc second i-f transformer	1.15
R1	AAR-119	300 ohm ½ watt wire-wound resistor	.15
R2, R7, R11	KR-53	50,000 ohm ¼ watt carbon resistor	.15
R3	HR-42	2 megohm ¼ watt carbon resistor	.15
R4	ZZR-196	30,000 ohm ¼ watt carbon resistor	.15
R5	LLR-149	400 ohm ½ watt wire-wound resistor	.15
R6, R10	KR-57	1 megohm ¼ watt carbon resistor	.15
R8	KR-54	100,000 ohm ¼ watt carbon resistor	.15
R9	2FR-205A	Volume control—0.5 megohms	.60
R12	LR-51	200,000 ohm ¼ watt carbon resistor	.15
R13	XXR-186A	Tone control with line switch—250,000 ohms	.90
R14, R15	KR-56	0.5 megohms ¼ watt carbon resistor	.15
R16, R17	LR-55	10,000 ohm ¼ watt carbon resistor	.15
R18	LR-54	5,000 ohm ¼ watt carbon resistor	.15
R19	ZZR-192A	Wire-wound ballast resistor—150 ohms	.40
C1, C2	XXC-187	Two-gang variable condenser	2.15
C3, C31	AAC-114	0.001 mf mica condenser	.15
C4, C10, C26	AC-6	0.1 mf, 200 volt tubular condenser	.15
C5	EC-24A	0.0001 mf mica condenser	.15
C6, C11, C12 C13, C17, C20 C23	ZZC-191B	Seven-section condenser block: C6—0.2 mf, 200 v. C11—0.1 mf, 200 v. C12—0.1 mf, 200 v. C13—0.1 mf, 200 v. C17—0.1 mf, 200 v. C20—0.1 mf, 200 v. C23—0.05 mf, 200 v.	1.05
C7	ZZC-204	0.005 mf mica condenser	.15
C8, C9	JJC-144C	Dual adjustable padding condenser: C8—800 to 1400 mmf C9—250 to 550 mmf	.50
C14, C19	CCC-127	0.01 mf, 200 volt tubular condenser	.15
C15, C16, C27	AC-7A	0.00025 mf mica condenser	.15
C18	BC-11	0.005 mf, 200 volt tubular condenser	.15
C22, C23, C24	ZZC-192A	Multiple 4, 8 and 16 mf electrolytic condenser: C22—4 mf, 150 volts C23—8 mf, 150 volts C24—16 mf, 150 volts	2.25
C25	YC-98	Tubular 4 mf, 150 volt electrolytic condenser	.70
S1	XXS-117A	Wave-band switch	1.10
	2FS-141	10" dynamic speaker	7.00
	KL-6	Pilot light, 6.3 volt, .15 amp. Mazda No. 40	.15
B1	XXZ-213	Bias cell, one volt	.15
	XXD-25B	Airplane dial	2.10
	XXZ-195	Escutcheon with crystal	.50

GENERAL NOTES

1. Bias for the grid of the audio section of the 75 tube is obtained by means of a very small one-volt battery (bias cell). The cell assembly is mounted on a bakelite strip on the inside of the right-hand chassis wall. Do not put a voltmeter across this bias cell. If the set distorts, check the cell by temporarily replacing with a new cell, or some other one-volt source, and noting results. To remove the bias cell, simply pull up on the spring clip and lift the cell from its cup. On replacing it be sure the clip makes good contact.
2. Pilot lights may be replaced by slipping the push-on sockets off the dial and unscrewing the bulbs. It is not necessary to remove either the dial or chassis from cabinet.
3. One side of the power line is directly grounded to the chassis base. Under no circumstances, therefore, should a ground wire be permitted to come in contact with any metal part of this receiver.
4. If replacements are made or the wiring disturbed in the r-f section of the circuit, the receiver should be carefully realigned.
5. In operating the receiver on d.c. it may be necessary to reverse the line plug for correct polarity.
6. The color coding of the i-f transformer leads is as follows:
   Grid—green — Plate—blue
   Grid return—black — B plus—red

©John F. Rider, Publisher

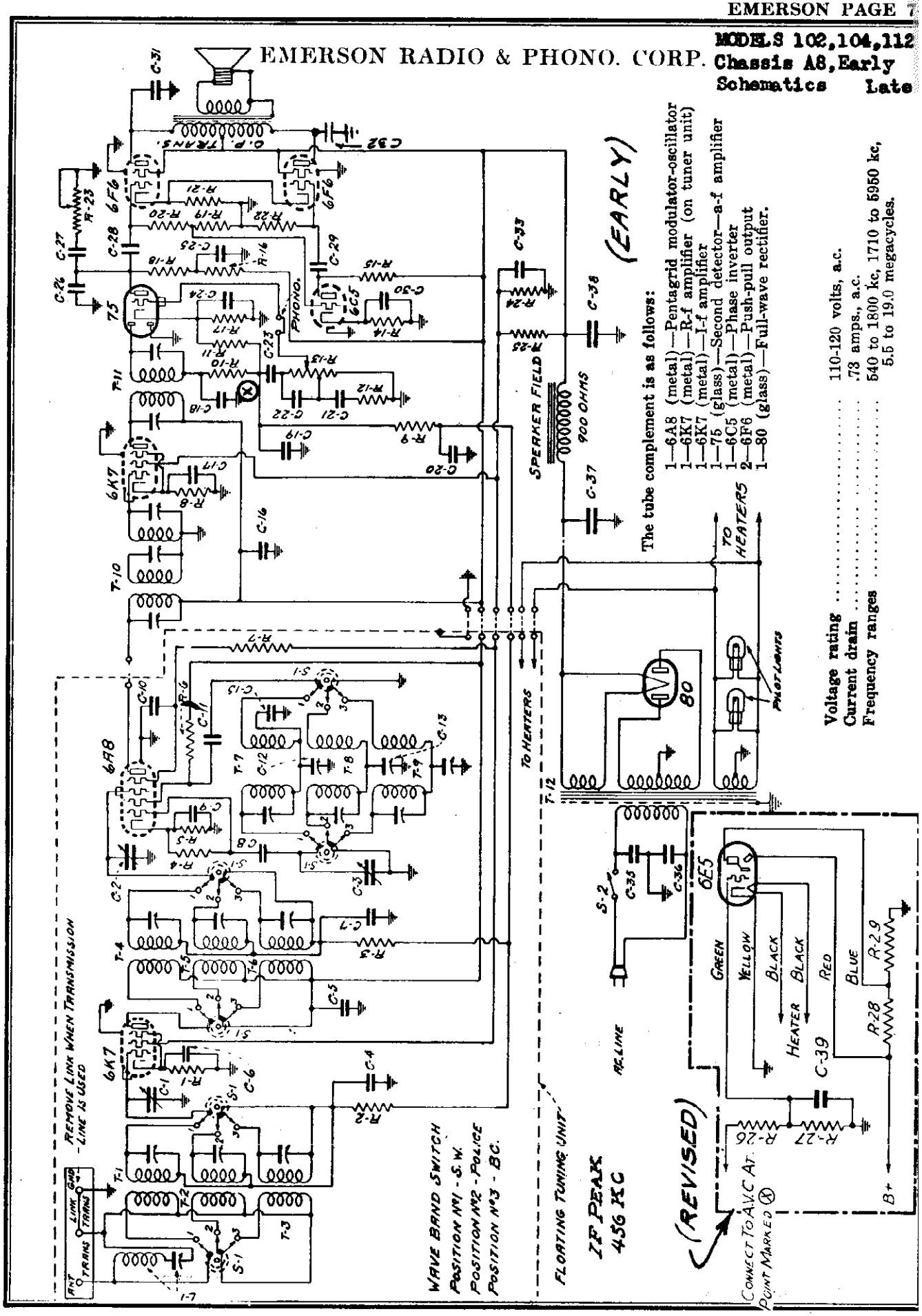

©John F. Rider, Publisher

MODELS 102,104,112
Chassis A8, Early and Late
Alignment, Voltage Changes, Parts

EMERSON RADIO & PHONO. CORP.

NOTES ON REVISED MODEL

In later production receivers a 6E5 cathode ray tube was added to the chassis to be used as a tuning indicator. The circuit revision is indicated in the schematic diagram. The entire 6E5 circuit is blocked off in the lower left hand corner of the diagram. It should be noted that the original circuit is not changed. The revision of these models involves only the addition of the 6E5 circuit.

The extra parts required for the addition of the 6E5 tube are listed under Replacement Parts below. Revisions in the main circuit and parts list are indicated under Production Changes.

VOLTAGE ANALYSIS

Reading should be taken with a 1000 ohms-per-volt meter. Voltages listed below are from points indicated to ground, with no signal. Line voltage for these readings was 117.5 volts, 60 cycles.

Tube	Plate	Screen	Cathode	Osc. Plate	Pin No.
6K7 (1st)	250	100	3.5	150	5
6K8 (2nd)	250	100	3.5		5
6K7 (1st)	250	100	3.5	150	5
6K8 (2nd)	250	100	3.5		5
6F6	250	250	15.5		1
6F6	250	250	15.5		1
6H6	250				9
6H6	250				9

Voltage across speaker field—100 volts.
B plus at 90 ohms—250 volts.

ADJUSTMENTS

An oscillator with frequencies of 455, 600, 1400, 1500, 1560, 4000 and 17000 is should be used.
An output meter should be used across the voice coil or speaker output transformer for observing maximum response.

I-F Alignment

The I-F transformers NNT-158 and NNT-154 are located on extreme left side of chassis. Set wave-band switch at position 1 (extreme left position). Set volume control at maximum position. Set tone control at treble position. Rock gang condenser to maximum capacity position. Feed 456 kc through antenna and adjust 456 kc trimmers for maximum response. Feed 456 kc through antenna and adjust 456 kc trimmers for maximum response. The wave-trap is located at bottom rear of set, directly under the antenna binding post.

Broadcast Alignment

The three broadcast coils are in separate cans on top of inner unit. (The inner unit is the separate cannister section located on right hand side of chassis.) All trimmers for these coils are located at bottom of cans and are available from bottom of chassis. NNT-160 is antenna coil, NNT-161 is detector coil and NNT-162 is oscillator coil. The oscillator coil has two adjusting screws; the one painted red is the series padder and the other is the trimmer. The antenna and detector coils have but trimmer, each.

Set switch at A (extreme left), tuning condenser at 600 on dial. Feed 600 kc to antenna and adjust broadcast oscillator padder (red screw) for maximum response. Set pointer at 1500, feed 1500 kc to antenna and adjust oscillator trimmer (brown screw) for maximum response. Set pointer at 600, feed 600 kc to antenna and adjust antenna trimmer (through hole at rear of unit). Repeat the pointer to 600, feed 600 kc to antenna and rock the variable condenser gang while adjusting antenna trimmer for maximum response. Return to 1500, and adjust oscillator trimmer for maximum response. Return to 600 and repeat entire procedure.

Police Alignment

The three police-band coils are the smaller ones located on the bottom side of the inner unit, at rear of wave-band switch (extreme side of coils) in the antenna binding post. The antenna coil is the one farthest from the wave-band switch. The detector coil is in the center and the oscillator coil is nearest the wave-band switch. Set wave-band switch to position 2 (police band). Set volume control at maximum position. Set tone control at treble position. Set gang condenser at maximum capacity position. Feed 1560 kc to antenna and adjust oscillator trimmer (through hole at rear of unit). Tune set to 1560 and adjust antenna trimmer (through hole at rear of unit). Repeat the above procedure for 1500 kc. Feed 1500 kc to antenna and rock the variable condenser gang while adjusting police band oscillator padder for maximum response. Return to 1500 and repeat entire procedure. If readjustment is necessary, return to 1560 and repeat entire procedure.

Short-Wave Alignment

The three short-wave coils are the larger ones located on bottom side of inner unit in rear at right of wave-band switch. The antenna coil is the one farthest from front of chassis, detector coil in center and oscillator coil nearest front of chassis. On dial padding condenser the padder farthest from wave-band switch is for short-wave oscillator coil. Each of the three trimmers for the short-wave coils is located on top of the respective coil.

Set switch at B (second position) and rock gang condenser to maximum capacity. Feed 6000 kc to antenna. First adjust oscillator padder (red screw) for maximum response. Set pointer to 17 megacycles and feed 17000 kc to antenna. First adjust oscillator trimmer (front) for maximum response. If two peaks are obtained, select the maximum capacity peak. Then adjust the antenna (rear) and detector (center) trimmers for maximum response. If two peaks are obtained, select the maximum capacity peak. Return pointer to 6 mc. Feed 6000 kc to antenna and adjust oscillator padder for maximum response. Return to 17 mc. Feed 17000 kc to antenna and check alignment.

Check the receiver on all three bands for dead spots which indicate incorrect alignment.

General Instructions

The oscillator is higher in frequency than the signal on all three bands. Images, therefore, should be observed on the low-frequency side of the signals.

Always have the maximum capacity peak on oscillator trimmers and maximum capacity peaks on antenna and r-f trimmers. The maximum capacity peak on oscillator trimmers should always be a tightening spot on the screw.

Never have a trimmer with the outside plate so loose that there is no tension on the screw. Either bend the plate up or remove the screw entirely. Loose screws are a source of noise, frequency drift and microphonism.

In aligning antenna trimmers on the high-frequency signals there is usually a tendency for the oscillator to drift, due to interlocking. To compensate for this always keep re-tuning the variable condenser as you align.

A jack is provided at the rear of the chassis for a phonograph attachment. The pickup to be used should be of the high impedance type. A separate potentiometer type volume control is required, the proper value to be determined by the type of pickup used. The potentiometer should be connected between the two terminals of the jack. The pickup is connected to the jack (looking at front with terminals at top) of the control. A lead from the center terminal should be plugged into the hole in the phono jack nearest the center of the chassis. A lead from the center terminal of the volume control should be plugged into the other hole in the jack (grid side of jack). A lead from the outside terminal of the volume control should be plugged into the hole in the jack (ground side of jack). The ends of leads to be plugged into the phono jack should be stripped for about 1/4 inch. Insert the pickup plug into the jack. When the pickup is plugged into the jack, the radio speaker is automatically disconnected from the circuit. When the pickup plug is removed from the jack, the radio speaker is automatically reconnected to the circuit. The radio speaker is connected with the phono attachment in order that the latter may be used as a signal tracer to locate trouble in the receiver. The pickup signals are then heard in the speaker. The leads should be removed before attempting to receive broadcast stations.

In replacing chassis in cabinet do not tighten mounting screws so much that chassis will not float freely, and do not allow any part of the chassis assembly to touch the cabinet. Do not push control knobs on so far that they touch the cabinet front panel. If these precautions are not observed the receiver may become microphonic.

The color coding of the power transformer leads is as follows:

2.5 v. winding	two green leads
Filament winding	two black leads
High voltage center tap	yellow and red leads
High voltage winding	two red leads

(Revised Model) - PRODUCTION CHANGES

To facilitate production of later receivers, tubular condensers were substituted for the screw-section condenser block, part no. NMC-187. Relative to these condensers, the revised parts list should read as follows:

Item No.	Part No.	Description	Price	Item No.
C16	MMO-432	0.1 mf, 400 volt tubular condenser	$.15	256, 257
C17	AC-5	0.1 mf, 200 volt tubular condenser	.15	259
C30	BC-12	0.05 mf, 200 volt tubular condenser	.15	
C25	AAC-118	0.25 mf, 400 volt tubular condenser	.15	
C27,28	MC-58	0.01 mf, 400 volt tubular condenser	.15	
C33	MMO-245	0.8 mf, 400 volt tubular condenser	.60	

The dial was changed from part no. NMD-25 to part no. NMD-254.
Previous to the above changes, C41, 8 mf-450 volt tubular electrolytic condenser (part no. NMC-226), was added.

REPLACEMENT PARTS

PRICES ARE SUBJECT TO CHANGE WITHOUT NOTICE

(EARLY)

Part No.	Item No.	DESCRIPTION	Net Price In U.S.A. Sept. 1st, 1938
NNT-160		Broadcast antenna coil	$
NNT-161		Broadcast detector coil	
NNT-162		Broadcast oscillator coil	
NNT-156		Intermediate band antenna coil	
NNT-157		Intermediate band detector coil	
NNT-158		Intermediate band oscillator coil	
NNT-153		Short-wave antenna coil	
NNT-155		Short-wave detector coil	
NNT-159		Short-wave oscillator coil	
NNT-152		456 kc first I-F transformer	
NNT-154		456 kc second I-F transformer	
NNT-151		Power transformer	
NNT-150		465 kc tunable wave-trap	
NNT-149		Tone control—2 megohms	
NNT-187A		Tone control—5 megohms	
NN-158		35,000 ohm metal clad wire-wound tapped resistor	
	R45	30,000 ohms, 10 watts	
	R46	10,000 ohms, 5 watts	
AAR-107		250 ohm, 2 watt wire-wound resistor	
AAR-109		500 ohm, 2 watt wire-wound resistor	
HR-121		1000 ohm, ½ watt wire-wound resistor	
GR-28		2000 ohm, ½ watt carbon resistor	
HR-101		3,500 ohm, ½ watt carbon resistor	
HR-113		4,000 ohm, ½ watt carbon resistor	
HR-93		5,000 ohm, ½ watt carbon resistor	
HR-89		10,000 ohm, ½ watt carbon resistor	
LR-114		50,000 ohm, ½ watt carbon resistor	
HR-84		100,000 ohm, ½ watt carbon resistor	15
HR-96		250,000 ohm, ½ watt carbon resistor	
HR-99		500,000 ohm, ½ watt carbon resistor	
HR-100		1 meg ohm, ½ watt carbon resistor	
NNR-164		2.5 meg ohm, ½ watt carbon resistor	
NNC-188		Dual padding condenser	
NNC-198A		C17, C18—800 to 1400 mmf	
NNC-186		Dual 8 mf, 450 v., dry electrolytic condenser	
NNC-185		Dual 16 mf, 450 v., dry electrolytic condenser	
		Resistance-tapped section	
		C16—1 mf, 400 v.	
		C17—1 mf, 400 v.	
		C30—.05 mf, 400 v.	
		C25—.25 mf, 400 v.	
		C27,28—.01 mf, 400 v.	
		C33—.8 mf, 400 v.	
AC-54A		.0001 mf mica condenser	15
AAC-114		.001 mf mica condenser	15
AAC-116		.005 mf mica condenser	15
NNC-181		.0075 mf mica condenser	15
NNC-182		.01 mf mica condenser	15
NNC-183		.0095 mf mica condenser	15
NNC-184		.02 mf mica condenser	15
CCC-147		.01 mf, 200 v. tubular condenser	15
CCC-148		.01 mf, 400 v. tubular condenser	15
AC-58		.1 mf, 200 v. tubular condenser	15
AC-59		.1 mf, 400 v. tubular condenser	15
BC-12		.05 mf, 200 v. tubular condenser	15
NNC-189		.25 mf, 200 v. tubular condenser, with mounting strap	15
NNC-190		Dual .01 mf, 200 v. condenser	15
NNC-191		Dual .05 mf, 200 v. condenser	15
KNW-106		On-off switch, with shield	20
NNS-118		8" dynamic speaker (for Model 104)	6.50
NNS-119		12" dynamic speaker (for Model 102)	9.50
NNT-156		Transformer with cords	1.50
NN-3		Pilot light, 6.3 volt, 15 amp. Mazda No. 40	.15

(Revised Model) - REPLACEMENT PARTS

Part No.	Description	List Price Sept. 1st, 1938
EB-47	1 megohm ½ watt carbon resistor	$.15
EB-43	2 megohm ½ watt carbon resistor	.15
BRE-224	4 megohm ½ watt carbon resistor	.15
CCC-157	0.01 mf, 200 volt tubular condenser	.15
BRE-227	6E5 tube socket and cable assembly	.40
BRE-213	Metal strap for 6E5 tube	.10
BRE-228	Wood cleat for 6E5 tube (for Model 112 only)	.30
BRE-225	Wood cleat for 6E5 tube (for Model 102 only)	.30
BRE-229	Wood cleat for 6E5 tube (for Model 113 only)	.30
BRE-201	Escutcheon for 6E5 tube	.20

©John F. Rider, Publisher

EMERSON RADIO & PHONO. CORP.

MODELS 102LW,104LW
Chassis B8
Schematic

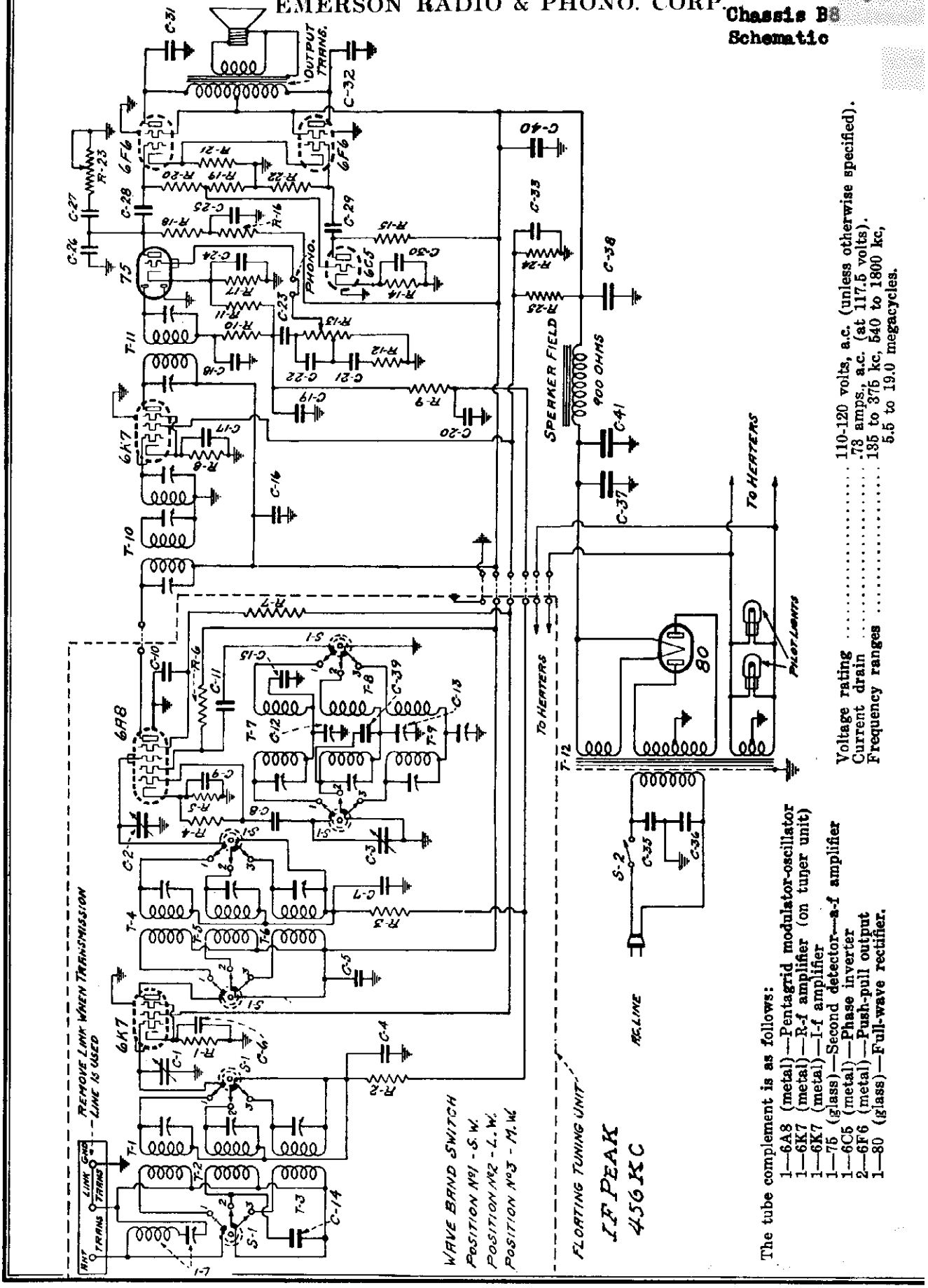

The tube complement is as follows:
1—6A8 (metal)—Pentagrid modulator-oscillator
1—6K7 (metal)—R-f amplifier (on tuner unit)
1—6K7 (metal)—I-f amplifier
1—75 (glass)—Second detector—a-f amplifier
1—6C5 (metal)—Phase inverter
2—6F6 (metal)—Push-pull output
1—80 (glass)—Full-wave rectifier.

Voltage rating ..... 110-120 volts, a.c. (unless otherwise specified).
Current drain ..... .78 amps., a.c. (at 117.5 volts).
Frequency ranges ..... 135 to 375 kc, 540 to 1800 kc,
5.5 to 19.0 megacycles.

©John F. Rider, Publisher

©John F. Rider, Publisher

ADJUSTMENTS

An oscillator with frequencies of 150, 345, 455, 600, 1400, 6000 and 17000 kc should be used.

An output meter should be used across the voice coil or speaker output transformer for observing maximum response.

I-f Alignment

The i-f transformers NNT-153 and NNT-154 are located on extreme left side of chassis. Set wave-band switch at position A (clockwise) and condenser at minimum. Feed 456 kc to grid of 6A8 tube. Adjust the five i-f trimmers carefully for maximum response. Feed 456 kc through antenna and adjust 456 kc wave-trap for *minimum response*. This wave-trap is located at bottom rear of set, directly under the antenna binding post.

Medium-Wave Alignment

The three medium-wave coils are in separate cans on top of tuner unit. (The tuner unit is the separate chassis section floated on rubber in center of chassis base). All trimmers for these coils are located at bottoms of cans and are available from bottom of chassis. NNT-150 is antenna coil, NNT-151 is detector coil and NNT-152 is oscillator coil. The oscillator coil has two adjusting screws; the one painted red is the series padder and the other is the trimmer. The antenna and detector coils have one trimmer each.

Set switch at A and pointer to 600 on dial. Feed 600 kc to antenna and adjust medium-wave oscillator padder (red screw at bottom front of tuner unit, left-hand corner) for maximum response. Set pointer at 1600, feed 1500 kc to antenna and adjust oscillator trimmer beside red padder for maximum response, and then adjust r-f trimmer (through hole at about center of tuner unit), and antenna trimmer (through hole at rear of unit). Reset the pointer to 600, feed 600 kc to antenna and rock the variable condenser while resetting the oscillator padder for maximum response. Return to 1400, and check alignment. If readjustment is necessary, return to 600 and repeat entire procedure.

Long-Wave Alignment

The three long-wave coils are the coils with the large number of turns located on the bottom side of the tuner unit, in row at left of wave-band switch (same side of switch as antenna binding post). The antenna coil is the one furthest from front of chassis, detector coil in center, and oscillator coil nearest front of chassis. The dual padder mounted on bottom, right-hand side of tuner unit has one padder for the long-wave oscillator coil and one for the short-wave oscillator coil. The padder nearest the wave-band switch is for the long-wave band. Each of the three trimmers for the long-wave coils is located on top of its respective coil.

Set switch at E (central position) and pointer to 150. Feed 150 kc to antenna. Adjust oscillator series padder (nearest to switch in right-hand corner) for maximum response. Set pointer to 345 and feed 345 kc to antenna. First adjust oscillator trimmer (front one on row of long-wave coils) for maximum response. Then adjust the antenna (rear) and detector (center) trimmers for maximum response. Return pointer to 150, feed 150 kc to antenna, and rock variable condenser while adjusting long-wave oscillator padder for maximum response. Return to 345 and check alignment. If a readjustment is necessary return to 150 and repeat entire procedure.

Short-Wave Alignment

The three short-wave coils are the ones with the heavy wire turns located on bottom side of tuner unit, in row at right of wave-band switch. The antenna coil is the one furthest from front of chassis, detector coil in center and oscillator coil nearest front of chassis. On dual padding condenser the padder furthest from wave-band switch is for short-wave oscillator coil. Each of the three trimmers for the short-wave coils is located on top of its respective coil.

Set switch at C (counter-clockwise) and pointer at 6 megacycles. Feed 6000 kc to antenna. Adjust short-wave oscillator padder (furthest from switch on dual unit) for maximum response. Set pointer to 17 megacycles and feed 17000 kc to antenna. First adjust oscillator trimmer (front) for maximum response. If two peaks are obtained, select the *minimum capacity* peak. Then adjust the antenna (rear) and detector (center) trimmers for maximum response. If two peaks are obtained, select the *maximum capacity* peak. Return pointer to 6 mc, feed 6000 kc to antenna and rock variable condenser while adjusting the oscillator padder for maximum response. Return to 17 mc. Feed 17000 kc to antenna and check alignment.

Check the receiver on all three bands for dead spots which indicate incorrect alignment.

General Instructions

The set's oscillator is higher in frequency than the signal on all three bands. Images, therefore, should be observed on the low-frequency side of the signals.

Always choose the minimum capacity peak on oscillator trimmers and maximum capacity peaks on antenna and r-f trimmers. The last motion in adjusting trimmers should always be a tightening one.

Never leave a trimmer with the outside plate so loose that there is no tension on the screw. Either bend the plate up or remove the screw entirely. Loose screws are a source of noise, frequency drift and microphonism.

In aligning antenna trimmers on the high-frequency signals there is usually a tendency for the oscillator to drift, due to interlocking. To compensate for this always keep re-tuning the variable condenser as you align.

GENERAL NOTES

1. A jack is provided at the rear of the chassis for a phonograph attachment. The pickup to be used should be of the high impedance type. A separate potentiometer type volume control is required, the overall resistance to be determined by the type of pickup chosen. The pickup leads should be connected to the two outside terminals of the volume control with the ground lead of the pickup on the right-hand terminal (looking at front with terminals at top) of the control. A lead from this terminal should be plugged into the hole in the phono jack nearest the center of the chassis. A lead from the center terminal of the volume control should be plugged into the other hole in the jack (grid side of jack). Ends of leads to be plugged in jack should be fitted with tips. The volume control in the receiver should be turned to the extreme counter-clockwise (low) position when operating phonograph. The pickup leads should be removed before attempting to receive broadcast stations.
2. The receiver should never be turned on with the speaker plug or the 6F6 tubes out of their sockets, since the rapid rise in rectifier voltage would damage the electrolytic condenser.
3. Pilot lights may be replaced by slipping the push-on sockets off the dial and unscrewing the bulbs. It is not necessary to remove either the dial or chassis from cabinet.
4. In replacing chassis in cabinet do not tighten mounting screws so much that chassis will not float freely, and do not allow any part of the dial assembly to touch the cabinet. Do not push control knobs on so far that they touch the cabinet front panel. If these precautions are not observed the receiver may become microphonic.
5. The color coding of the power transformer leads is as follows:

Primary—two green leads	6.3 v. sec.—two heavy blue leads
High voltage sec.—two black leads	6.3 center tap—thin blue lead
High voltage center tap—yellow lead	5 v. sec.—two heavy red leads.

6. If the dial is of the type which has four small screws spaced circularly about the main knob shaft it may be adjusted to prevent slipping by carefully tightening up on these screws. Extreme care should be exercised to tighten the screws only enough to cure the slipping; excessive pressure will damage the internal mechanism.

VOLTAGE ANALYSIS

Readings should be taken with a 1000 ohms-per-volt meter. Voltages listed below are from point indicated to ground, with no signal. Line voltage for these readings was 117.5 volts, 60 cycles.

Tube	Plate	Screen	Cathode	Osc. Plate	Fil.
6K7 (r-f)	250	107	4.0	—	6.3 a.c.
6A8	250	100	8.5	190	6.3 a.c.
6K7 (i-f)	250	107	8.5	—	6.3 a.c.
75	100	—	0.9	—	6.3 a.c.
6C5	135	—	4.7	—	6.3 a.c.
6F6	245	250	15.5	—	6.3 a.c.
6F6	245	250	15.5	—	6.3 a.c.

Voltage across speaker field—100 volts.

B plus at 80 filament—350 volts.

PRICES ARE SUBJECT TO CHANGE WITHOUT NOTICE

REPLACEMENT PARTS

* Item	Part No.	DESCRIPTION	List Price Effective as of Sept. 1st, 1935 Price
T3	NNT-150	Broadcast antenna coil	$ .90
T6	NNT-151	Broadcast detector coil	.90
T9	NNT-152	Broadcast oscillator coil	.90
T2	2HT-212	Long-wave antenna coil	.70
T5	2HT-213	Long-wave detector coil	.70
T8	2HT-214	Long-wave oscillator coil	.65
T1	NNT-158	Short-wave antenna coil	.55
T4	NNT-159	Short-wave detector coil	.60
T7	NNT-160	Short-wave oscillator coil	.55
T10	NNT-153	456 kc first i-f transformer	1.75
T11	NNT-154	456 kc second i-f transformer	1.35
T12	NNT-191	Power transformer	3.90
L1	MMT-149	456 kc tunable wave-trap	.35
R18	NNR-154	Volume control—1.2 megohms	.70
R22	NNR-157A	Tone control—.5 megohms	.50
R24, R25	NNR-158	25,000 ohm metal clad wire-wound tapped resistor R24—15,000 ohms, 2.5 watts R25—10,000 ohms, 2 watts	.40
R21	AAR-107	250 ohm, 2 watt wire-wound resistor	.15
R1, R5	CCR-140	350 ohm, ½ watt wire-wound resistor	.15
R8	IIR-121	1000 ohm, ½ watt wire-wound resistor	.15
R7, R14	QR-85	2000 ohm, ½ watt carbon resistor	.15
R17	ER-101	3,300 ohm, ½ watt carbon resistor	.15
R19	LR-64	5,000 ohm, ½ watt carbon resistor	.15
R12	KR-43	15,000 ohm, ½ watt carbon resistor	.15
R4, R15	KR-53	50,000 ohm, ½ watt carbon resistor	.15
R16	LLR-154	75,000 ohm, ½ watt carbon resistor	.15
R2, R3 R10, R22	KR-54	100,000 ohm, ½ watt carbon resistor	.15
R18	KR-55	250,000 ohm, ½ watt carbon resistor	.15
R9, R11	KR-56	500,000 ohm, ½ watt carbon resistor	.15
R6	YR-97	15,000 ohm, ½ watt carbon resistor	.15
R20	NNR-204	95,000 ohm, ½ watt carbon resistor	.15
C1, C2, C3	NNC-153	3 gang variable condenser	3.25
C12, C18	2HC-219	Dual padding condenser C12—500 to 1400 mmf C18—150 to 360 mmf	.80
C37, C38	2HC-217	Dual 8 mf, 450 w. v., dry electrolytic condenser	1.65
C41	NNC-226	Tubular 8 mf, 450 v. electrolytic condenser	1.00
C24, C30	IC-45	6 mf, 25 volt tubular dry electrolytic condenser	.60
C16, C17	NNC-157	Seven-section condenser block	1.30
C20, C25		C16—.1 mf, 400 v. C27—.01 mf, 400 v.	
C27, C28		C17—.1 mf, 200 v. C28—.01 mf, 400 v.	
C33		C20—.05 mf, 200 v. C29— .9 mf, 400 v.	
		C25—.25 mf, 400 v.	
C8, C14	EC-24A	.0001 mf mica condenser	.15
C18, C19, C36	AC-1A	.00025 mf mica condenser	.15
C11	AAC-114	.001 mf mica condenser	.15
C15	NNC-121	.0015 mf mica condenser	.15
C22	IC-47	.0005 mf mica condenser	.15
C39	IIC-123A	.000025 mf mica condenser	.15
C31, C32	NNC-214	.002 mf, 1000 v. tubular condenser	.15
C23	CGC-127	.01 mf, 200 v. tubular condenser	.15
C29	KC-58	.01 mf, 400 v. tubular condenser	.15
C6, C9	AC-6	.1 mf, 200 v. tubular condenser	.15
C5, C10	EEC-132	.1 mf, 400 v. tubular condenser	.15
C21	BC-12	.05 mf, 200 v. tubular condenser	.15
C4, C7	NNC-158	.05 mf, 200 v. tubular condenser, with mounting strap	.15
C40	IC-46	.5 mf, 400 v. tubular condenser	.25
C35, C34	XXC-220	Dual .01 mf, 250 v. condenser	.30
S1	NNS-96	Wave-band switch, with shields	2.40
S2	NNS-109	On-off switch	.50
	NNS-115	8" dynamic speaker (for Model 104LW)	6.50
	NNS-121	10" dynamic speaker (for Model 102LW)	7.50
	2HD-32	Airplane dial	5.25
	NNE-305	Escutcheon with crystal	.50
	KL-6	Pilot light, 6.3 volt, .15 amp. Mazda No. 40	.15

EMERSON RADIO & PHONO. CORP.

MODEL J106
Chassis J
Schematic, Voltage
Alignment, Data

Readings should be taken with a 1000 ohms-per-volt meter. Voltages listed below are from point indicated to ground (chassis) with the volume control turned on full and no signal. Line voltage for these readings was 117.5 volts, 60 cycles, a.c.

Tube	*Plate*	*Screen*	*Cathode*	*Osc. Plate*	*Fil.*
6A7	105	55	2.6	105	6.3
6D6	105	105	2.6	—	6.3
75	25	—	.6	—	6.3
43	99	105	13	—	25

Voltage across speaker field—115 volts.
Voltage across choke—8.9 volts.
Voltage drop across ballast tube (See R10 schematic)—49 volts.
Voltage drop across pilot light section of ballast tube—4 volts.

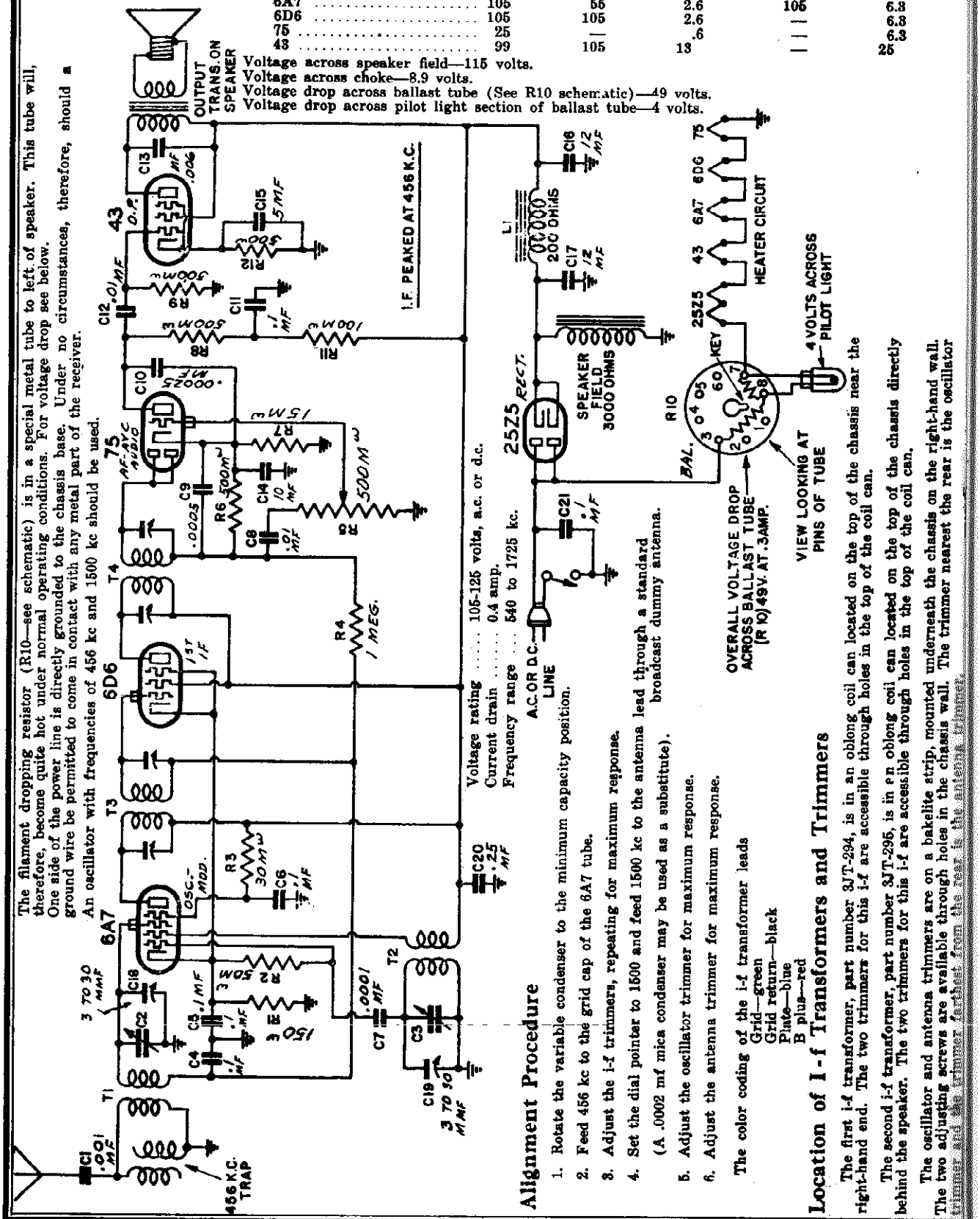

Alignment Procedure

1. Rotate the variable condenser to the minimum capacity position.
2. Feed 456 kc to the grid cap of the 6A7 tube.
3. Adjust the i-f trimmers, repeating for maximum response.
4. Set the dial pointer to 1500 and feed 1500 kc to the antenna lead through a standard broadcast dummy antenna. (A .0002 mf mica condenser may be used as a substitute).
5. Adjust the oscillator trimmer for maximum response.
6. Adjust the antenna trimmer for maximum response.

The color coding of the i-f transformer leads

Grid—green
Grid return—black
Plate—blue
B plus—red

Location of I-f Transformers and Trimmers

The first i-f transformer, part number 3JT-294, is in an oblong coil can located on the top of the chassis near the right-hand end. The two trimmers for this i-f are accessible through holes in the top of the coil can.

The second i-f transformer, part number 3JT-296, is in an oblong coil can located on the top of the chassis directly behind the speaker. The two trimmers for this i-f are accessible through holes in the top of the coil can.

The oscillator and antenna trimmers are on a bakelite strip, mounted underneath the chassis on the right-hand wall. The two adjusting screws are available through holes in the chassis wall. The trimmer nearest the rear is the oscillator trimmer and the trimmer farthest from the rear is the antenna trimmer.

©John F. Rider. Publisher

MODELS 107,111
Chassis U6F
Schematic,Voltage,Notes

EMERSON RADIO & PHONO. CORP.

VOLTAGE ANALYSIS

Readings should be taken with a 1000 ohms-per-volt meter. Voltages listed below are from point indicated to cathode of the 43 tube (B minus). Line voltage for these readings was 117.5 volts, 60 cycles, a.c.

Tube	*Plate*	*Screen*	*Cathode*	*Osc. Plate*	*Fil.*
6A7	99	43	1.1	80	6.3
6K7	99	80	1.8	—	6.3
6H6	—	—	0	—	6.3
6F5	50	—	0	—	6.3
43	87	99	0	—	24

Voltage across speaker field (black and yellow leads)—120

Voltage across filter choke—9.5

The 250 ohm bias resistor, R16 and R17 on schematic diagram, is located underneath the chassis deck near volume control.

Voltage across the two outside terminals of this resistor—11.5

Voltage from cathode of 43 tube to central terminal of resistor—1.0

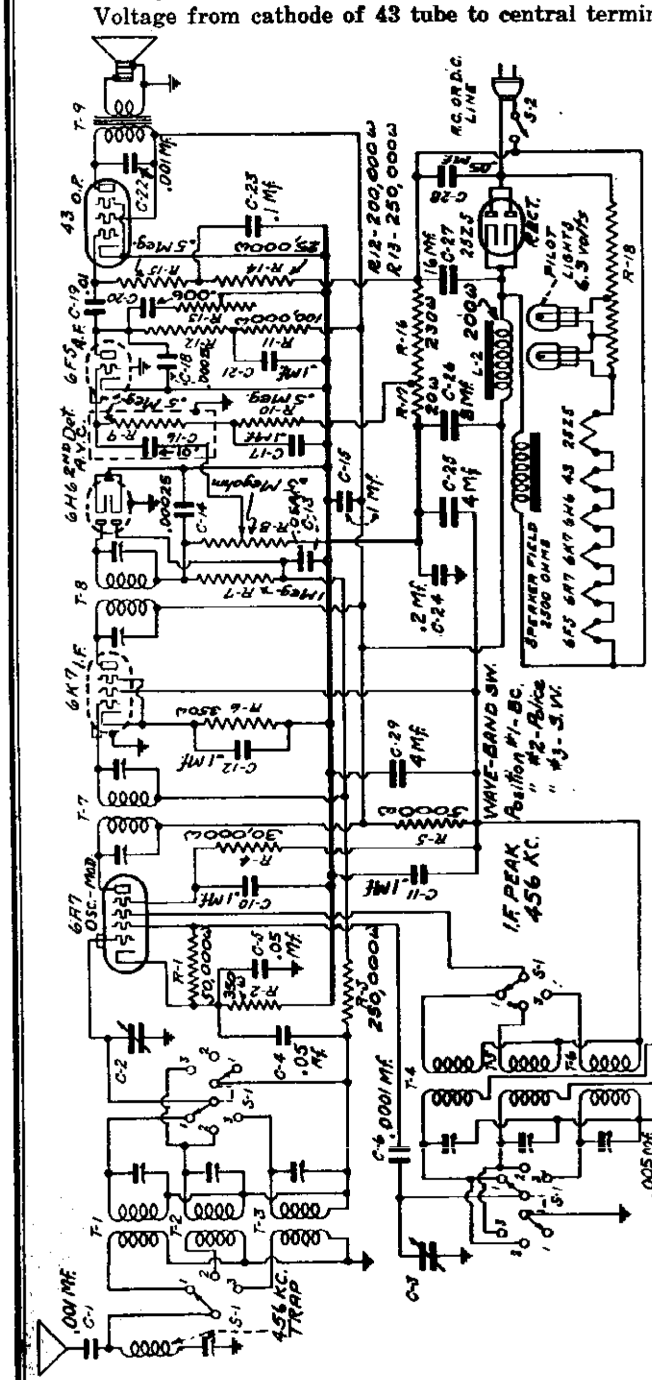

Schematic of Emerson chassis U6F used in Models 107, 111.

The schematic diagram of the receiver bearing these model numbers, shown on *Emerson page 6-15 of Rider's Volume VI*, is for Chassis U6A. A note on that page makes reference to chassis U6F that carries the same model numbers, 107 and 111. This chassis is different and its schematic is shown in the accompanying illustration.

The filament dropping resistor (Part No. 2LR-212) is of the cylindrical plug-in type and is located on top of the chassis between the 6H6 and 25Z5 tubes. The output transformer (Part No. 2LT-221 and T-9 on the diagram) and the filter choke (Part No. 2CT-207A and L-2 on the diagram) are located in the square can on top of the chassis to the left of the speaker.

The voltage across the speaker field (black and yellow leads)—120, and the voltage across the filter choke—9.5. Voltage across two outside terminals of the 250-ohm bias resistor (R-16 and R-17, located underneath the chassis deck near the volume control)—11.5 and the voltage from the cathode of the 43 tube to central terminal of resistor—1.0.

The various paragraphs under the heading "Adjustments" on Emerson page 6-16 applies to this chassis also, with the exception of the locations of the trimmers for the antenna coils. These are as follows: Short-wave coil, upper trimmer; police band, central trimmer, and that for the broadcast band is the lower trimmer. While adjusting the short-wave antenna trimmer (the upper one) for maximum response, rock the variable condenser.

Voltage rating .... 105-130 volts ac-dc
Current drain ..... 0.43 amps.

The filament dropping resistor, part number 2LR-212, is of the cylindrical plug-in type and is located on top of the chassis between the 6H6 and 25Z5 tubes.

The output transformer, part no. 2LT-221 (T9 on schematic diagram) and the filter choke, part no. 2CT-207A (L2 on schematic diagram) are located in the square can on top of the chassis to the left of the speaker.

©John F. Rider, Publisher

EMERSON RADIO & PHONO. CORP.

MODELS 107AC,114
Chassis E5
Schematic,Voltage
Alignment,Changes

ADJUSTMENTS

An oscillator with frequencies of 456, 600, 1600, 6000 and 7500 should be used.
An output meter should be used across the voice coil or output transformer for observing maximum response.

Location of Coils and Trimmer Adjustments:

The two i-f transformers are located on the top of the chassis deck. The second i-f is the one directly behind the 6A7 tube. The four trimmers, two for each transformer, are accessible through holes in the tops of the cans.

The 456 kc wave trap is located on top of the chassis deck beside the antenna coil.

The adjustable padding condenser for the broadcast band is mounted underneath the chassis deck (in the corner near the antenna coil) with the screw adjustment accessible through a hole in the front of the chassis.

The antenna coils for the broadcast and short-wave bands are wound on one form and mounted on bracket on top of chassis deck. The trimmers for these coils are accessible through holes in the bracket. The trimmer nearest the chassis is the short-wave antenna trimmer. The trimmer nearest the top of the bracket is the broadcast antenna trimmer.

The oscillator coil for the broadcast and short-wave bands are wound on one form and mounted underneath the chassis deck. The trimmers for these coils are accessible through holes in the right-hand wall of the chassis. The trimmer nearest the front of the chassis is for the short-wave oscillator coil, and the trimmer farthest from the front is for the broadcast oscillator coil.

Short-Wave Alignment:

Use a 400 ohm dummy antenna (a 400 ohm resistor in series with the test oscillator lead) in aligning the short-wave coils. Rotate the wave-band switch to the short-wave position (counter-clockwise) and set the variable condenser at minimum capacity. Feed 7500 kc and adjust the short-wave oscillator trimmer (closest to front on right-hand chassis wall) for maximum response. Then feed 6000 kc and rotate the variable condenser until the signal is picked up, and adjust the short-wave antenna trimmer (lower one on upright bracket on right side of chassis) for maximum response. Be very careful to choose the minimum capacity peak on the oscillator trimmer. (See General Instructions below).

Broadcast Alignment:

Use a standard dummy antenna in aligning the broadcast coils. (A .0002 condenser may be used as a substitute). Rotate the wave-band switch to the broadcast position, clockwise. Set the dial pointer at 600 and feed 600 kc. Adjust the broadcast series padder (in front under antenna coil) for maximum response. Move pointer to 1500 and feed 1600 kc and adjust the broadcast oscillator trimmer (farthest from front on right-hand chassis wall) for maximum response. Then adjust the antenna trimmer (nearest top on upright bracket) for maximum response. Return to 600, feed 600 kc and readjust the broadcast series padder, rocking the variable condenser (rotate the variable condenser shaft back and forth through a small arc) for maximum response.

The set's oscillator is higher in frequency than the signal, so images should be observed on the low frequency side of the signals.

Always choose the minimum capacity peak on oscillator trimmers and maximum capacity peaks on antenna trimmers. The last motion in adjusting trimmers should always be a tightening one, not a loosening one.

Never leave a trimmer with the outside plate so loose that there is no tension on the screw. Either bend the plate up or remove the screw entirely.

Always use as weak a test signal as possible during alignment.

1. The receiver should never be turned on with the 41 tube out of its socket, since the rapid rise in rectifier voltage may damage the electrolytic condenser.
2. When replacing the chassis in the cabinet take precautions to keep any part of the dial and condenser assembly from touching the cabinet, otherwise microphonism will result.
3. The color-coding of the i-f transformers is as follows:

Grid—green	Grid return—black
B plus—red	Plate—blue

4. The color-coding of the power transformer is as follows:

Primary—two black leads	5 volt secondary—two green leads
High-voltage secondary—two red leads	Electrostatic shield—bare stranded wire

5. The adjustable padding condenser for the broadcast band is mounted underneath the chassis (in the corner near the wave-band switch) with the screw adjustment accessible through a hole in the front of the chassis. The short-wave band has a fixed padder which is a 1850 mmf molded mica condenser. (Note that this condenser is coded 1800 mmf). When replacing this fixed padder be careful to use a condenser which has a capacity within 3% of 1850 mmf, otherwise the short-wave coils may not track.
6. With a few exceptions, the color-coding of the general wiring is as follows:

Plate—blue	Cathode—white or yellow
B plus—red	Grid—green
Screen—brown	Filament and ground—black

PRODUCTION CHANGES

On early production:

a. Trimmer across secondary of broadcast antenna coil had rotor returned to ground.
b. Trimmer across secondary of short-wave oscillator coil had rotor returned to ground.
c. In very early sets 85 tube was used in place of 75, and .02 mf coupling condenser went directly to plate. One 100,000 ohm plate resistor was used in place of two resistors R-10 and R-15 shown in plate circuit. The control grid of the 85 in these receivers was connected directly to movable arm on the volume control, and R-14 and C-24 were not in the circuit.
d. Model 114 had 8D6, first i-f tube in place of 78. All production changes above also apply to model 114.
e. The second electrolytic condenser C19 was of the regulating type, part no. 2NC-247A.
f. The 456 kc wave-trap was originally part no. MMT-149.

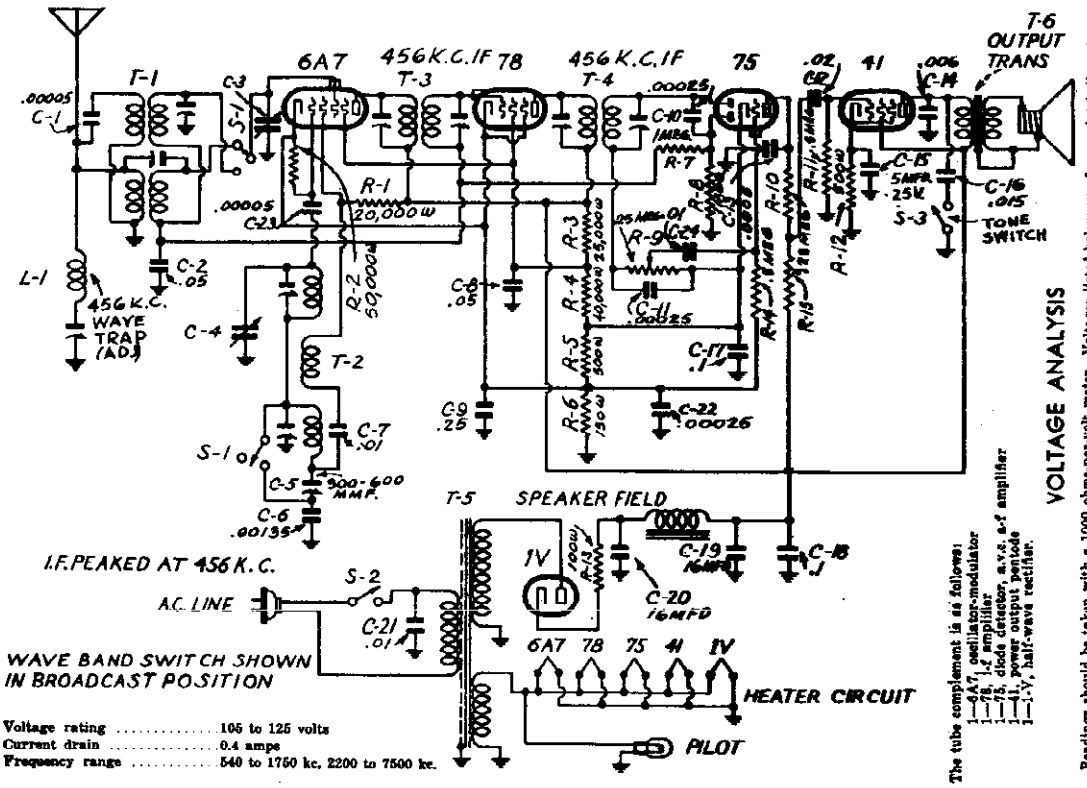

Voltage rating ..... 105 to 125 volts
Current drain ..... 0.4 amps
Frequency range ..... 540 to 1750 kc, 2200 to 7500 kc.

The tube complement is as follows:
1—6A7, oscillator-modulator
1—78, i-f amplifier
1—75, diode detector, a.v.c. a-f amplifier
1—41, power output pentode
1—1V, half-wave rectifier.

VOLTAGE ANALYSIS

Readings should be taken with a 1000 ohms-per-volt meter. Voltages listed below are from point indicated to ground, with volume control turned on full and no signal. Line voltage for these readings was 117.5 volts, 60 cycles, a.c.

Tube	Plate	Screen	Cathode	Osc. Plate	FIL.
6A7	219	71	2.3	150	6.3 a.c.
78	219	71	2.3	—	6.3 a.c.
75	75	—	3.2	—	6.3 a.c.
41	206	219	18.6	—	6.3 a.c.

B plus at cathode of 1-V tube—271 volts.
Voltage across the speaker field—60 volts.

©John F. Rider, Publisher

©John F. Rider, Publisher

MODELS 118,120,126
Chassis U4B
Schematic, Voltage
Alignment, Changes
Parts List

EMERSON RADIO & PHONO. CORP.

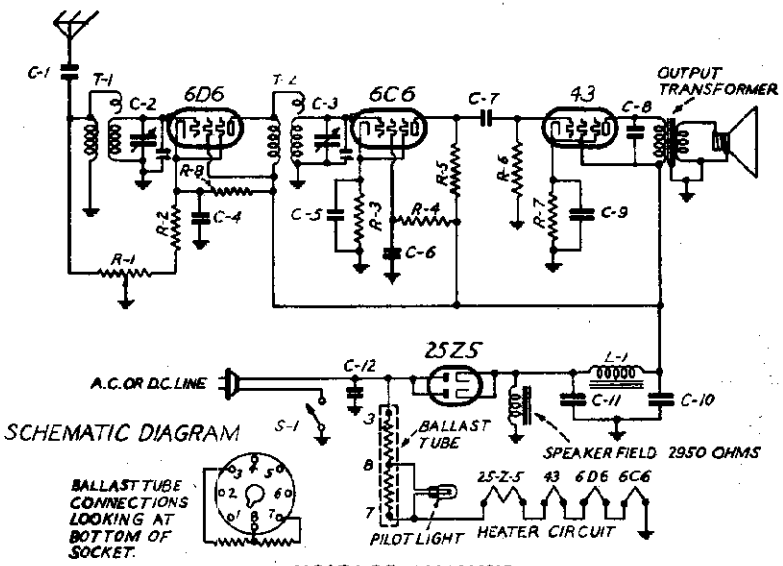

VOLTAGE ANALYSIS

Readings should be taken with a 1000 ohms-per-volt meter. Voltages listed below are from point indicated to ground (chassis) with volume control turned on full and no signal. The line voltage for these readings was 117.5 volts, 60 cycles, a-c.

Tube	*Plate*	*Screen*	*Cathode*	*Fil.*
6D6	100	102	3	6.3
6C6	30	21	2	6.3
43	95	101	13	25.0

Voltage across speaker field (25Z5 cathode to chassis)—118 volts.

Voltage across choke (25Z5 cathode to 43 screen)—16.5 volts.

The line voltage dropping resistor, part no. 2VR-215, is of the plug-in type and resembles a metal tube. The overall voltage drop of this resistor is 55 volts.

ALIGNMENT PROCEDURE

An oscillator with a frequency of 1425 kc is required.

The dial pointer should be at the extreme low-frequency end of the dial calibration when the variable condenser is at the maximum capacity position.

Set the dial pointer at 1425, feed 1425 kc to the antenna and adjust both trimmers on the variable condenser for maximum response. Use as weak a test signal as possible.

Range: The receiver is designed to operate over the broadcast range from 540 to 1650 kilocycles. This range covers all of the standard American broadcast stations and some of the low-frequency police transmitters.

The tubes used are as follows:
1—6D6, r-f amplifier.
1—6C6, biased detector.
1—43, power output pentode.
1—25Z5, dual half-wave rectifier.

Voltage rating	105 to 130 volts a-c or d-c
Current drain	0.38 amps.
Frequency range	540 to 1650 kc.

REPLACEMENT PARTS

PRICES ARE SUBJECT TO CHANGE WITHOUT NOTICE

*ITEM	PART NO.	DESCRIPTION	List Price as of Sept. 1st, 1935
L1	ZZT-196A	Iron-core filter choke—500 ohms	$ .60
T1	2VT-241	Antenna coil	.55
T2	2VT-242	Detector coil	.55
R1, S1	2VR-219A	Volume control with line switch—75,000 ohms	.75
R2	AAR-119	300 ohm ½ watt wire-wound resistor	.16
R3	OR-73	25,000 ohm ¼ watt carbon resistor	.16
†R4	HR-42	2 megohm ½ watt carbon resistor	.16
R5, R6	KR-56	500,000 ohm ½ watt carbon resistor	.16
R7	KKR-135A	650 ohm 1 watt wire-wound resistor	.16
†R8	KR-55	250,000 ohm ½ watt carbon resistor	.16
	2VR-215	Ballast resistor tube (voltage dropping resistor—overall voltage drop is 55 volts)	.60
C1	AAC-114	0.001 mf mica condenser	.16
†C2, C3	2VC-244	Two-gang variable condenser	1.90
C4, C5	AC-5	0.1 mf, 200 volt tubular condenser	.16
C6, C9	GGC-137A	Combination by-pass and filter condenser block C6—5 mf, 25 volts. C10—8 mf, 150 volts. C9—5 mf, 25 volts. C11—16 mf, 150 volts.	2.25
C10, C11			
C7	CCC-127	0.01 mf, 200 volt tubular condenser	.16
C8	KC-58	0.01 mf, 400 volt tubular condenser	.16
C12	2VC-242	0.1 mf, 250 volt a-c tubular condenser	.16
	2VS-157	5" dynamic speaker	3.25
	XL-9	Pilot light, 6.3 volts, .25 amps, Mazda No. 46	.15
	2SD-35	Airplane dial	1.20

† See Production Changes below.
* Item number locates the article on the schematic diagram.

WHEN ORDERING REPLACEMENT PARTS SPECIFY PART NUMBERS

PRODUCTION CHANGES

Receivers bearing serial numbers up to about 708,040 did not have a resistor connected from the cathode of the 6D6 tube to B plus. (This resistor is R8 on schematic diagram.)

In receivers bearing serial numbers up to 712,500 the variable condenser was part no. 2VC-238. The variable condenser now indicated in the parts listed above was used in receivers bearing serial numbers above 712,500. (The part no. is stamped on the end plate of the condenser.)

In receivers bearing serial numbers up to 720,250, R4 was a 500,000 ohm ¼ watt carbon resistor.

EMERSON PRODUCTION CHANGES AS OF 4/29/36,
NOT ALREADY NOTED IN SERVICE NOTES.

Chassis Model U4B; Cabinet Models 118 and 126

Receivers bearing serial numbers lower than 740,750:
C-8, .01 output condenser, was originally across 43 plate and ground, instead of to screen.

THE RECEIVER WAS DESIGNED TO OPERATE WITHOUT A GROUND. UNDER NO CIRCUMSTANCES SHOULD A GROUND WIRE BE PERMITTED TO COME IN CONTACT WITH ANY METAL PART OF THE RECEIVER.

Power Supply: The power supply for this receiver should be either a. c. 50 to 60 cycles, or d. c., of any voltage between 105 and 130 volts. With special external line cord ballast resistors this receiver may be operated on higher voltages.

EMERSON RADIO & PHONO. CORP.

MODELS 107LW, 111LW
Chassis U6C
Schematic

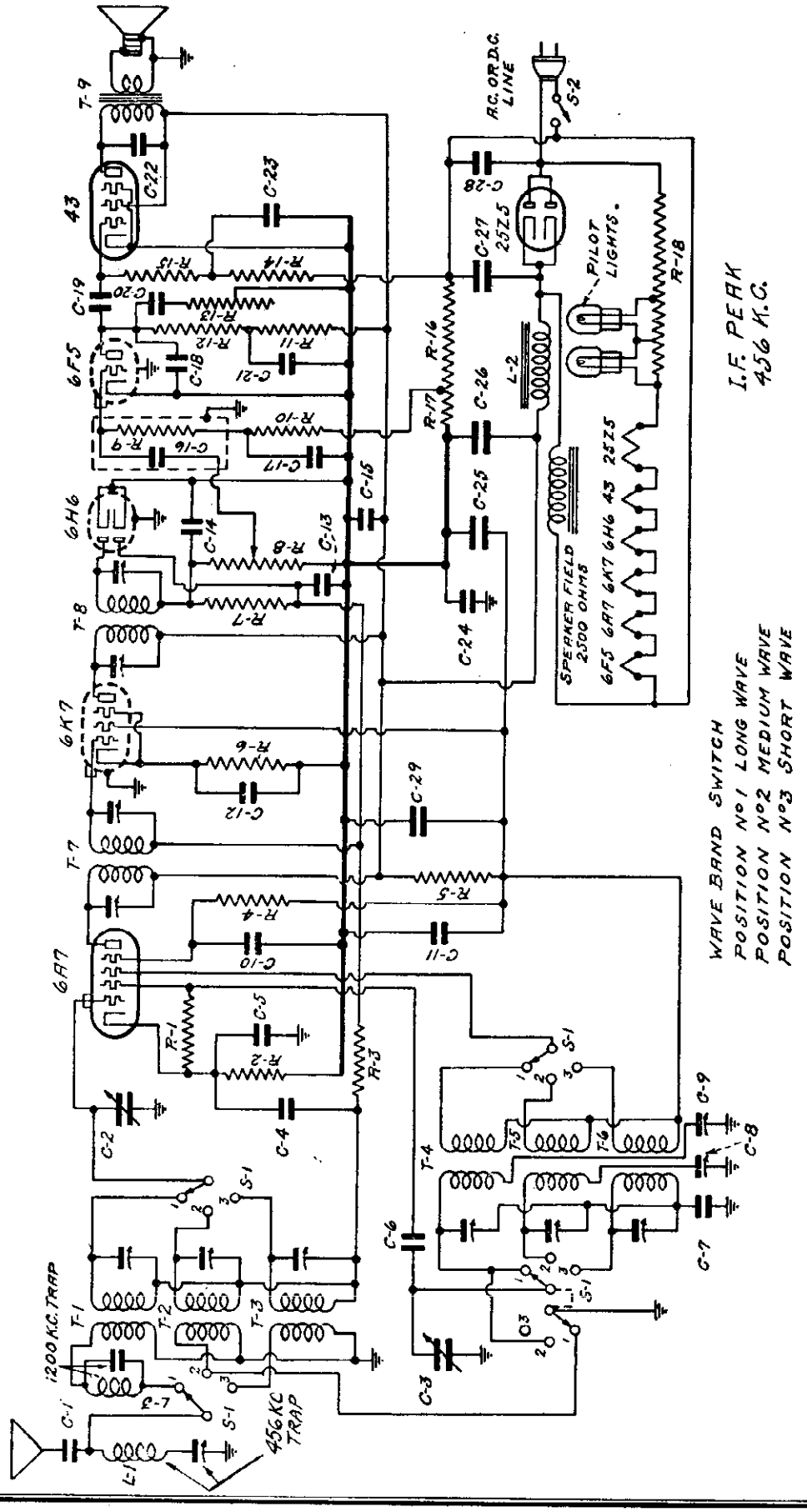

Voltage rating ..... 105 to 130 volts
Current drain ..... 0.43 amps.
Frequency range ..... 135 to 359 kc, 540 to 1660 kc, 5.5 to 16 megacycles.

The tube complement is as follows:
1—6A7 (glass) Pentagrid oscillator-modulator
1—6K7 (metal) I-f amplifier
1—6H6 (metal) Diode-detector and a.v.c.
1—6F5 (metal) Audio amplifier
1—43 (glass) Power output pentode
1—25Z5 (glass) Dual half-wave rectifier

©John F. Rider, Publisher

ADJUSTMENTS

An oscillator with frequencies of 150, 345, 456, 600 and 1600 and 15,000 kc should be used. An output meter should be used across the voice coil or output transformer for observing maximum response.

I-f and Wave-Trap Alignment

The two i-f transformers are located in cans on the top of the chassis. The first i-f is in the right hand rear corner and the second i-f is behind the speaker. The four trimmers, two for each transformer, are located at the tops of the cans.

Rotate the variable condenser to minimum and set the wave-band switch to medium-wave (central position). Feed 456 kc to the grid of the 6A7 tube and align the four i-f trimmers for maximum response. Feed 456 kc through the antenna and adjust the 456 kc wave-trap for *minimum response*. The wave-trap trimmer is mounted on the wave trap located on top of the chassis behind the speaker.

Location of Coils

The antenna coils for the three bands are wound on one form and mounted on top of the chassis in the front right-hand corner. The three trimmers for these coils are mounted on a bakelite strip to the side of the coil form. The lowest trimmer is for the long-wave antenna coil. The central trimmer is for the medium-wave antenna coil and the top trimmer for the short-wave antenna coil.

The oscillator coils for the three bands are wound on one form and mounted on the inside of the right-hand chassis wall with the trimmers facing out. The trimmer screws are available through three holes in the chassis wall. The trimmer closest to front is for the long-wave oscillator coil, the central trimmer is for the medium-wave oscillator coil and the trimmer furthest from the front is for the short-wave oscillator coil.

The adjusting screws for the dual padder are also available at the right-hand chassis wall. The screw closer to the front is for the long-wave band and the other is for the medium-wave band. The short-wave band has no padder.

Long-Wave Alignment

Rotate the wave-band switch (clockwise) to the long-wave position and set dial to 150. Feed 150 kc through antenna and adjust the long-wave series padder (closest to front on lower row, right wall), for maximum response. Move dial pointer to 345, feed 345 kc and adjust the long-wave oscillator trimmer (closest to front on top row, right wall) and then the long-wave antenna trimmer (lower trimmer on upright coil). Return to 150 kc and readjust the series padder, rocking the variable condenser for maximum response. Return to 345 kc and check.

Medium-Wave Alignment

Rotate switch to medium-wave position (central). With dial at 600 feed 600 kc through the antenna and adjust the medium-wave band series padder (furthest from front on lower row, right wall), for maximum response. Move dial pointer to 1500, feed 1500 kc and adjust the medium-wave oscillator trimmer (on right wall, top row, center) for maximum response and then the medium-wave antenna trimmer (on top of chassis, central trimmer). Return to 600 kc and readjust the medium-wave series padder for maximum response. Return to 1500 kc and check.

Short-Wave Alignment

Rotate switch to the short-wave position (counter-clockwise) and set dial pointer to 15 megacycles. Feed 15 megacycles and adjust the short-wave oscillator trimmer (furthest from front on right wall) for maximum response, *choosing the minimum capacity peak*, and then the short-wave antenna trimmer (top trimmer on upright coil) *choosing the maximum capacity peak*. (See General Instructions below.)

Check all three bands for dead spots or incorrect image responses.

General Instructions

The set's oscillator is higher in frequency than the signal on *all three bands*, so images should be observed on the low frequency side of the signals.

Always choose the minimum capacity peak on oscillator trimmers and maximum capacity peaks on antenna trimmers. The last motion in adjusting trimmers should always be a tightening one, *not* a loosening one.

Never leave a trimmer with the cutside plate so loose that there is no tension on the screw. Either bend the plate up or remove the screw entirely. Loose screws are a sure source of noise, drifting, and microphonism.

In aligning antenna trimmers on the high-frequency signals there is always a tendency for the oscillator to drift, due to interlocking. To compensate for this always keep tuning the variable condenser as the trimmers are being adjusted.

VOLTAGE ANALYSIS

Readings should be taken with a 1000 ohms-per-volt meter. Voltages listed below are from point indicated to the cathode of the 43 tube (B minus). Line voltage for these readings was 117.5 volts, 60 cycles, a.c.

Tube	*Plate*	*Screen*	*Cathode*	*Osc. Plate*	*Fil.*
6A7	99	43	1.1	80	6.3
6E7	99	80	1.8	—	6.3
6H6	—	—	0	—	6.3
6F5	50	—	0	—	6.3
43	87	99	0	—	24

Voltage across speaker field (black and yellow leads)—120

Voltage across filter choke—9.5

The 250 ohm bias resistor, R16 and R17 on schematic diagram, is located underneath the chassis deck near the volume control.

Voltage across the two outside terminals of this resistor—11.5

Voltage from cathode of 43 tube to central terminal of resistor—1.0 volt.

GENERAL NOTES

1. To take the chassis out of the Model 107 cabinet first remove the knobs (knobs are of push-on type) and then the cabinet bottom. Remove the two wood screws and four nuts holding the chassis to the cabinet. With the receiver bottom side up, slide the chassis towards the back and lift out of cabinet.
2. If replacements are made or the wiring disturbed in the r-f section of the circuit, the receiver should be carefully realigned.
3. The filament dropping resistor, part number 2LR-212, is of the cylindrical plug-in type and is located on top of the chassis between the 6H6 and 25Z6 tubes.
4. The output transformer, part number 2LT-221 (T9 on schematic diagram), and the filter choke, part number 2CT-207A (L2 on schematic diagram), are located in the square can on top of the chassis to the left of the speaker.

REPLACEMENT PARTS LIST

PRICES ARE SUBJECT TO CHANGE WITHOUT NOTICE

Item	Part No.	DESCRIPTION	Price
L1	MMT-149	456 kc adjustable wave trap	$ .35
L2	2CT-207A	Filter choke—200 ohms	.80
L3	FFT-128	1200 kc image trap	.80
T1, T2, T3	2MT-222	Three-band antenna coil	2.80
T4, T5, T6	2MT-223	Three-band oscillator coil	1.85
T7	2LT-224	456 kc first i-f transformer	1.15
T8	2LT-225	456 kc second i-f transformer	1.15
T9	2LT-221	Speaker output transformer	1.00
R1	KR-53	50,000 ohm ¼ watt carbon resistor	.16
R2, R6	CCR-140	350 ohm ½ watt wire-wound resistor	.16
R3	KR-55	250,000 ohm ¼ watt carbon resistor	.16
R4	ZZR-196	30,000 ohm ¼ watt carbon resistor	.16
R5	LR-64	5,000 ohm ¼ watt carbon resistor	.16
R7	KR-57	1 megohm ¼ watt carbon resistor	.16
R8, S2	ZZR-190A	Volume control with line switch—0.5 megohm	.75
R9, R10, R15	KR-56	0.5 megohm ¼ watt carbon resistor	.16
R11	KR-54	100,000 ohm ¼ watt carbon resistor	.16
R12	LR-61	200,000 ohm ¼ watt carbon resistor	.16
R13	ZZR-191A	Tone control—250,000 ohms	.55
R14	OR-73	25,000 ohm ¼ watt carbon resistor	.16
R16, R17	2CR-211	250 ohm, one watt, wire-wound tapped resistor R16—230 ohms R17—20 ohms	.25
R18	2LR-212	Plug-in type ballast resistor	.35
C1, C22	AAC-114	0.001 mf mica condenser	.16
C2, C3	ZZC-184	Two-gang variable condenser	1.30
C4, C5	2LC-225	0.05 mf, 200 volt tubular high-frequency condenser	.16
C6	EC-24A	0.0001 mf mica condenser	.16
C7	ZZC-206	0.005 mf mica condenser	.16
C8, C9	FFC-135A	Dual adjustable padding condenser C8—150 to 300 mmf C9—250 to 550 mmf	.50
C10, C11, C12 C13, C15, C24	2LC-223	Six-section condenser block C10—0.1 mf, 200 v. C13—0.05 mf, 200 v. C11—0.1 mf, 200 v. C15—0.1 mf, 200 v. C12—0.1 mf, 200 v. C24—0.2 mf, 200 v.	1.10
C14, C18	AC-7A	0.00025 mf mica condenser	.16
C16, C19	CCC-127A	0.01 mf, 200 volt tubular condenser	.16
C17, C21, C23	AC-8	0.1 mf, 200 volt tubular condenser	.16
C20	HC-34	0.006 mf, 600 volt tubular condenser	.16
C25, C26, C27	2LC-224	Multiple 4, 8 and 16 mf electrolytic condenser C25—4 mf, 150 volts C26—8 mf, 150 volts C27—16 mf, 150 volts	2.10
C28	LC-84	0.05 mf, 400 volt tubular condenser	.16
C29	YC-98A	Tubular 4 mf, 150 volt electrolytic condenser	.70
	2LS-142	Dynamic speaker (without output transformer)	9.75
S1	ZZS-129A	Wave-band switch	1.05
	XL-9	Pilot light, 6.3 volts, .25 amp. Mazda No. 46	.15
	2MD-33	Airplane dial	1.35
	ZZZ-209	Escutcheon	.20

©John F. Rider, Publisher

EMERSON RADIO & PHONO. CORP.

MODELS 108LW, 110LW
Chassis U5B
MODEL 109
Chassis U4A
Schematics

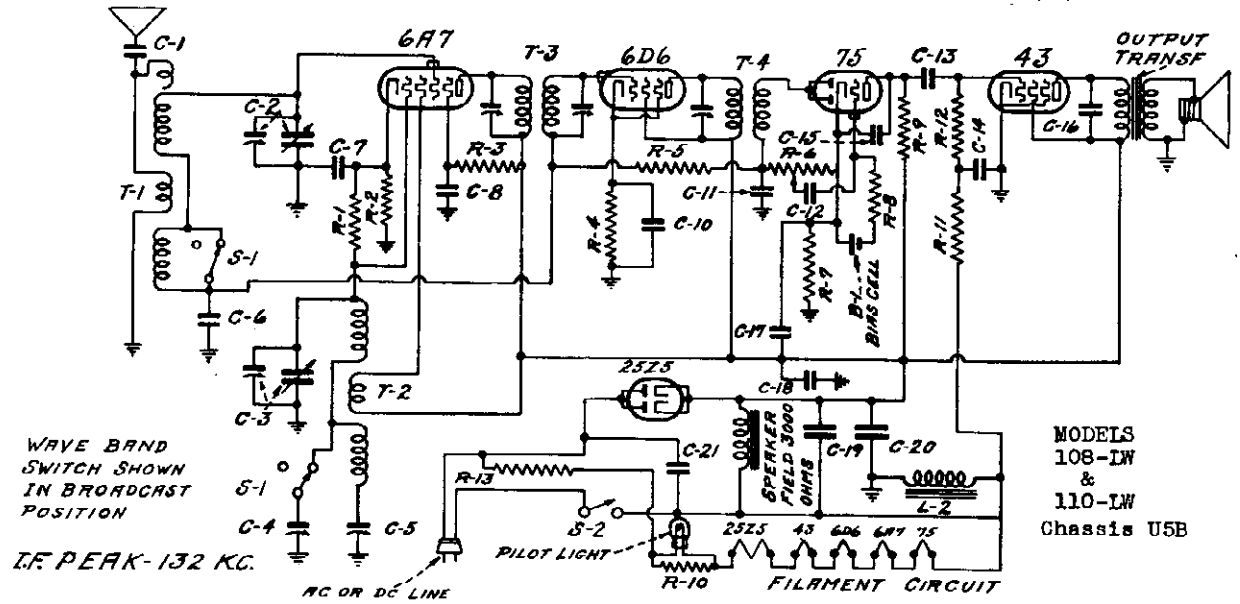

MODELS 108-1W & 110-1W Chassis U5B

The tube complement is as follows:

1—6A7—Pentagrid oscillator-modulator.
1—6D6—I-f amplifier.
1—75—Diode detector, audio amplifier, automatic volume control.
1—43—Pentode power output.
1—25Z5—Dual half-wave rectifier.

Voltage rating	105-130 volts
Current drain	0.4 amp.
Frequency ranges	145 to 475 kc. 530 to 1550 kc.

Model 109 Chassis U4A

I.F. 456 K.C.

The tube complement is as follows:

1—6A7—Pentagrid oscillator-modulator
1—6F7—Triode amplifier-pentode detector
1—43—Pentode power output
1—25Z5—Dual half-wave rectifier

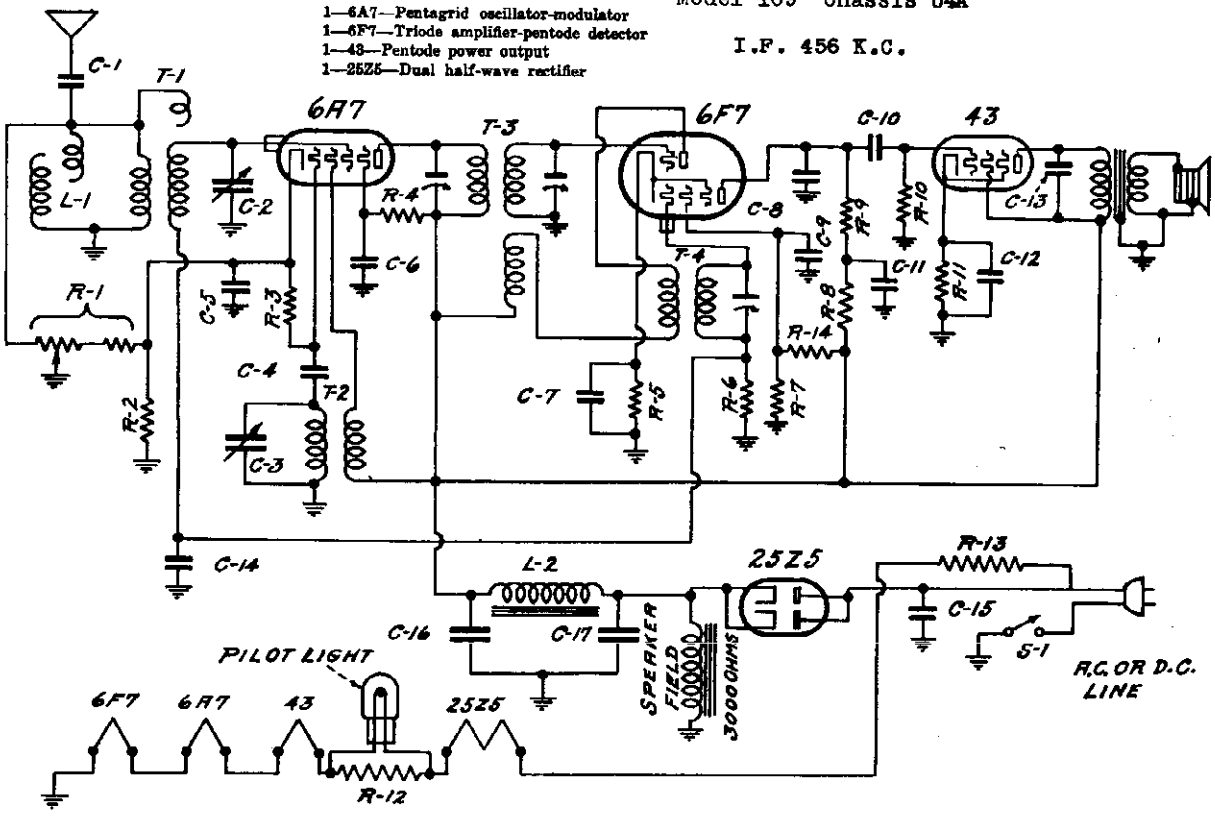

©John F. Rider, Publisher

MODELS 108LW,110LW
Chassis U5B
MODEL 109
Chassis U4A
Alignment, Voltage
Notes, Parts Lists

EMERSON RADIO & PHONO. CORP.

MODEL 108-LW & 110-LW
Chassis U5B

VOLTAGE ANALYSIS

Readings should be taken with a 1000 ohms-per-volt meter. Voltages listed below are from points indicated to ground (chassis). Line voltage for these readings was 117.5 volts, 60 cycles, a.c.

Tube	Plate	Screen	Cathode	Osc. Plate	Pin
6A7	135	85	2.2	105	6
6K8	135	135	2.2	—	5
75	45	105	1.5	—	3
43	100	105	—	—	2

Voltage across speaker field (5625 ohms) to line (switch)—120 volts.
Voltage across choke (chassis to line switch)—80 volts.

Location of Coils and Trimmer Adjustments:

The first I-F transformer, part 277-217, is located on the top of the chassis. The two trimmers for this transformer may be adjusted through two holes in the top of the can. The second I-F transformer is mounted on the inside of the right-hand wall of the chassis, and has one trimmer accessible through a hole in the chassis.

The antenna trimmer is on the front section (antenna) of the variable condenser. The oscillator trimmer is on the rear section (oscillator) of the variable condenser unit mounted on the metal strap at the rear of the chassis. There are two trimmers on the condenser, one for the long-wave band and one for the medium-wave band. The long-wave padder is the one nearest to the wave-band switch. The one farthest from the switch is the medium-wave series padder.

Alignment Procedure:

1. Rotate wave-band switch (at rear of chassis) to the medium-wave position, clockwise.
2. Rotate the variable condenser to the minimum capacity position and feed 183 kc to the grid cap of the 6A7 tube.
3. Adjust the three I-F trimmers (two on first I-F and one on the second I-F) for maximum response.
4. Rotate the wave-band switch to the long-wave position, counter-clockwise, and set dial pointer to 172.5.
5. Feed 172.5 kc to antenna lead and adjust the long-wave series padder (on dial unit, nearest to switch) for maximum response.
6. Rotate the wave-band switch to the medium-wave position, clockwise, and set the dial pointer at 600.
7. Feed 600 kc to antenna and adjust the medium-wave series padder (one on dial unit, furthest from switch) for maximum response.
8. Tune dial pointer to 1428, feed 1428 kc to antenna and adjust the oscillator trimmer, on the rear section of the variable condenser, for maximum response and then adjust the antenna trimmer, on the front section of the variable condenser, for maximum response.
9. Return pointer to 600 kc, feed 600 kc and readjust the medium-wave series padder while rocking the variable condenser (rotate variable condenser shaft back and forth through a small arc) for maximum response.
10. Return pointer to 1428, feed 1428 kc and check the medium-wave adjustments.
11. Rotate wave-band switch to the long-wave position, counter-clockwise. Set pointer at 172.5, feed 172.5 kc and readjust the long-wave series padder while rocking the variable condenser for maximum response.

The color coding of the I-F transformer leads is as follows:

	Plate	B plus	Grid return	Grid
	blue	red	black	green

REPLACEMENT PARTS

PRICES ARE SUBJECT TO CHANGE WITHOUT NOTICE

List Price Effective Sept. 1st, 1937

*Item	Part No.	DESCRIPTION	PRICE
	EKC-136	Filter choke—500 ohms	$ .60
	277-215	Tuned-input antenna coil	.70
	277-216	Tuned-band oscillator coil	.70
	277-217	183 kc first I-F transformer	1.00
	277-218	183 kc second I-F transformer	1.00
	EKR-1545	250 ohm 1/4 watt wire-wound resistor	.15
	CCC-140	800 ohm 1/4 watt wire-wound resistor	.15
	EKR-150	50,000 ohm 1/4 watt carbon resistor	.15
	AAR-113	500 ohm 1/2 watt wire-wound resistor	.15
R8	EKW-47	1 megohm 1/4 watt carbon resistor	.15
R9	EKR-149	1,500 ohm 1/2 watt carbon resistor	.15
R10	EK-50	0.5 megohm 1/4 watt carbon resistor	.15
R11, R12	EDR-300	30 ohm wire-wound metal clad resistor	.15
R13		145 ohm, 15 watt resistor wire in line cord (see part no. EDW-45, below)	.15
C11	IC-41A	Two-gang variable condenser	2.50
C66	EC-211	Trimmer for C11	.15
C66	JIC-1440	Dual adjustable padding condenser: C6—290 to 1428 mmf; C66—290 to 1428 mmf.	.50
C6, C14, C21 C7, C9, C10	AC-2	0.1 mf, 200 volt tubular condenser	.10
C15, C18	CCC-127	0.01 mf, 600 volt tubular condenser	.15
C16	AC-7A	0.00025 mf mica condenser	.15
C17	EC-24	0.006 mf, 600 volt tubular condenser	.15
C19	EC-34	0.05 mf, 200 volt tubular condenser	.15
C20	EC-13	0.25 mf, 200 volt tubular condenser	.15
C12, C22	EDC-308	Multiple 8 and 16 mf electrolytic filter condenser: C12—16 mf, 150 volts. C22—8 mf, 150 volts.	1.50

MODEL 109
Chassis U4A

VOLTAGE ANALYSIS

Voltage readings should be taken with a 1000 ohms-per-volt meter. Voltages listed below are from points indicated to ground (chassis).

Tube		Plate	Screen	Cathode	Osc. Plate	Pin
6A7		135	85	1.35	105	6
6F7	Pentode	135	75	2.25	—	5
	Triode	105	75	2.25	—	2
43		95	105	14.5	—	3.0

Voltage across speaker field—115
Voltage across choke—10.5

Location of I-F's and Trimmers:

The first I-F transformer, part No. EKT-136, is in an oblong coil can, located on top of the chassis directly behind the speaker. The two trimmers for this I-F are accessible through holes in the top of the coil can.

The second I-F transformer, part No. EKT-137S, is in a round coil can located on top of the chassis to the left of the speaker. The slight trimmer for this I-F is accessible through a hole in the top of the coil can.

The oscillator and antenna trimmers are located on the top of the variable condenser. The oscillator trimmer is on the rear section and the antenna trimmer is on the front section.

The color coding of the I-F transformer leads is as follows:

FIRST I-F TRANSFORMER (Part No. EKT-136)		SECOND I-F TRANSFORMER (Part No. EKT-137S)	
Plate	blue	Plate	blue
B plus	red	B plus	red
Grid return	black	Grid return	black
Tertiary	black, red tracer	Grid	green
Grid	green		

When replacing the oscillator coil, part number EKT-138, be sure to mount it in the correct position. The locating hole in the square fibre terminal strip should be nearest the rear of the chassis.

REPLACEMENT PARTS

List Price Effective Sept. 1st, 1937

*Item	Part No.	DESCRIPTION	PRICE
L2	EKT-138	Filter choke—300 ohms	$ .70
T1, L1	EKT-134	Antenna coil with 456 kc wave trap	.85
T2	EKT-135	Oscillator coil	.85
T3	EKT-136	456 kc first I-F transformer	1.40
T4	EKT-137S	456 kc second I-F transformer	1.10
R1, R1	EKR-1545	Volume control with line switch—5,000 ohms	.55
R2	EKR-150	6,000 ohm 1/4 watt carbon resistor	.15
R3, R14	EK-53	20,000 ohm 1/4 watt carbon resistor	.15
R4, R5	CR-73	35,000 ohm 1/4 watt carbon resistor	.15
R6	*FFR-133	600 ohm 1/2 watt wire-wound resistor	.15
R6	EK-57	1 megohm 1/4 watt carbon resistor	.15
R7	EK-45	10,000 ohm 1/4 watt carbon resistor	.15
R8	EK-55	250,000 ohm 1/4 watt carbon resistor	.15
R9	EK-56	0.5 megohm 1/4 watt carbon resistor	.15
R10	EKR-135A	650 ohm 1 watt wire-wound resistor	.15
R11	EDR-300	30 ohm wire-wound metal clad resistor	.30
R12	EKW-44A	185 ohm, 17 watt resistor wire, built into line cord	.70
R13	AAC-114	0.001 mf mica condenser	.15
C1	EKC-143A	Two-gang variable condenser	2.15
C2, C3	EC-76A	0.0005 mf mica condenser	.15
C4			
C5, C6, C9 C11, C14	AC-4A	0.1 mf, 200 volt tubular condenser	.10
C7, C12	EKC-146	Dual 8 mf, 25 volt tubular electrolytic condenser	.90
C8	AC-7A	0.00025 mf mica condenser	.10
C10, C13	EC-33A	0.01 mf, 400 volt tubular condenser	.15
C15	GC-47	0.1 mf, 400 volt tubular condenser	.15
C16, C17	EKC-148	8 and 12 mf electrolytic filter condenser: C16—8 mf, 150 volts. C17—12 mf, 150 volts	1.30

©John F. Rider, Publisher

EMERSON RADIO & PHONO. CORP.

MODELS 116,121
Chassis G5
Schematic
Voltage

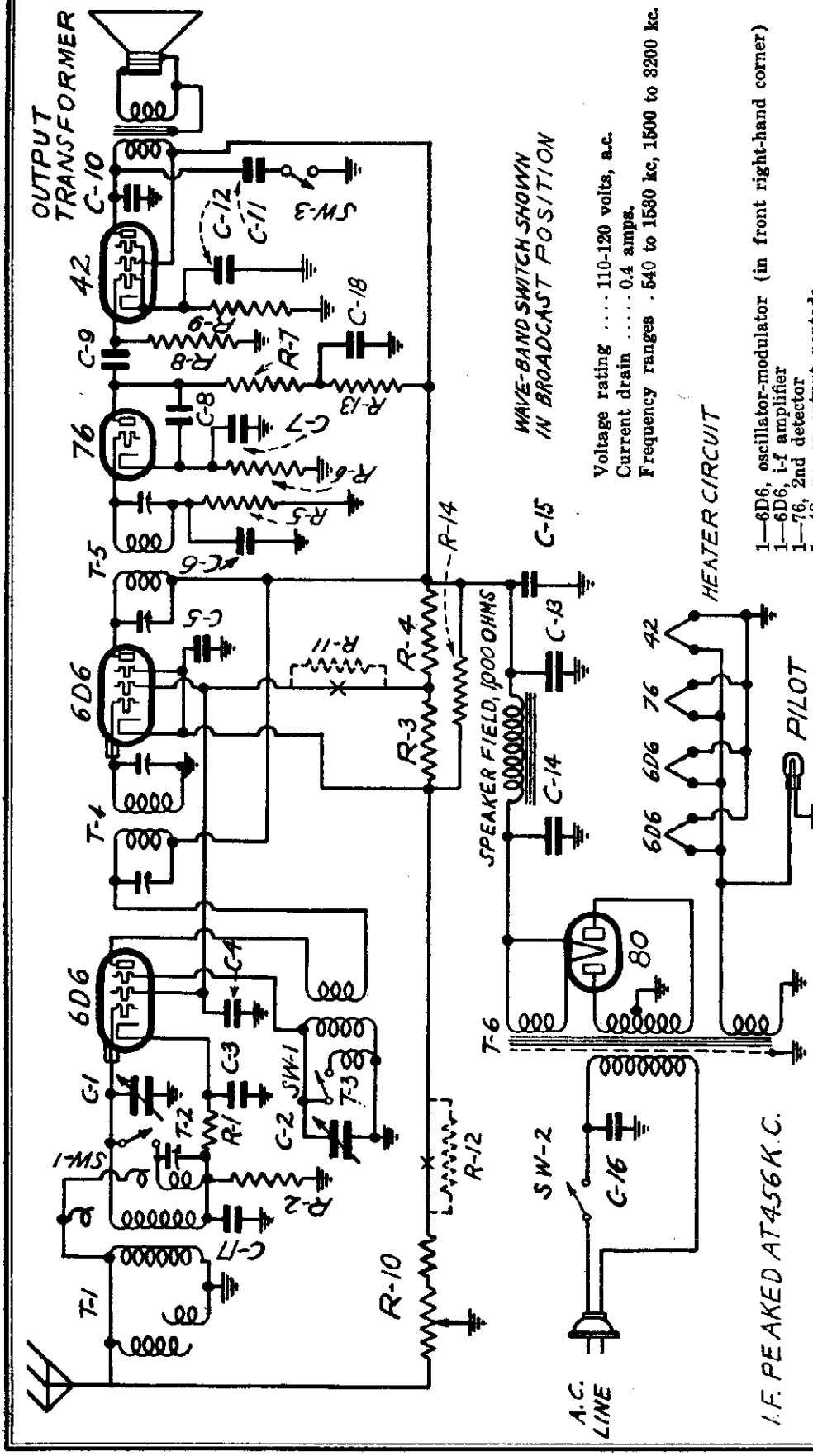

Voltage rating ..... 110-120 volts, a.c.
Current drain ..... 0.4 amps.
Frequency ranges . 540 to 1580 kc, 1500 to 3200 kc.

1—6D6, oscillator-modulator (in front right-hand corner)
1—6D6, i-f amplifier
1—76, 2nd detector
1—42, power output pentode
1—80, full-wave rectifier.

VOLTAGE ANALYSIS

Readings should be taken with a 1000 ohms-per-volt meter. Voltages listed below are from point indicated to ground (chassis) with volume control turned on full and no signal. Line voltage for these readings was 117.5 volts, 60 cycles, a.c.

Tube	*Plate*	*Screen*	*Cathode*	*Fil.*
6D6 (in front right-hand corner)	230	107	21.5	6.3 a.c.
6D6 (i-f)	230	107	4.0	6.3 a.c.
76	125	—	9.8	6.3 a.c.
42	210	230	13.5	6.3 a.c.

B plus at filament of 80 tube—295 volts.
Voltage across speaker field—65 volts.

©John F. Rider, Publisher

©John F. Rider, Publisher

GENERAL NOTES

1. The receiver should never be turned on with either the speaker plug or the 42 tube out of its respective socket, since the rapid rise in rectifier voltage will damage the electrolytic condenser.

2. The color coding of the leads of the composite first i-f transformer and oscillator coil, part no. TTT-178, is as follows:

B plus—red	Oscillator grid return—black
Plate—blue	Suppressor grid—green with white tracer
i-f grid return—white. (See following line.)	i-f grid—green

In some receivers the i-f grid return and the oscillator grid return were brought out in one common black lead.

3. The color coding of the leads of the second i-f transformer, part no. TTT-176A, is as follows:

Grid—green	Plate—blue
Grid return—black	B plus—red

4. The color coding of the leads on the power transformer is as follows:

Primary—two green leads.
High voltage secondary—two black leads.
High voltage secondary center-tap—yellow lead.
6.3 volt secondary—two heavy blue leads.
5 volt secondary—two heavy red leads.

5. With a few exceptions, the color coding of the general wiring is as follows:

Plate—blue	Cathode—white or yellow
B plus—red	Grid—green
Screen—brown	Filament and ground—black.

6. When replacing the chassis in the cabinet take precautions to keep any part of the dial and condenser assembly from touching the cabinet, otherwise microphonism will result.

7. It is not necessary to remove the chassis from the cabinet to replace the pilot light. Simply slip the push-on bracket off the dial and unscrew the bulb.

ADJUSTMENTS

An oscillator with frequencies of 456, 1425 and 2500 kc is required.
An output meter should be used across the voice coil or output transformer for observing maximum response.

Location of Coils and Trimmer Adjustments

The two i-f transformers are located on top of the chassis deck. The second i-f is the one directly behind the variable condenser. Part no. TTT-178 is a composite broadcast oscillator coil and first i-f transformer.

The broadcast antenna coil is mounted underneath the chassis deck, directly below the variable condenser. The short-wave oscillator coil is mounted on the right-hand wall of the chassis. The short-wave antenna coil is located underneath the chassis deck near the oscillator coil. The trimmer for this short-wave antenna coil is mounted on the coil tubing.

i-f Alignment

Rotate the wave-band switch to the broadcast position, clockwise, and swing the variable condenser to the maximum capacity position. Feed 456 kc to the stator of the front (antenna) section of the variable condenser. Adjust the four i-f trimmers (at tops of i-f cans) for maximum response.

Broadcast Alignment (Use a .0002 mf condenser as a dummy antenna.)

With the wave-band switch in the broadcast position, set the dial pointer at 1426. Feed 1425 kc to the antenna and adjust first the oscillator trimmer (rear) and then the antenna trimmer (front) on the variable condenser for maximum response.

Short-wave Alignment

Rotate the wave-band switch to the short-wave position, counter-clockwise. Feed 2500 kc through the antenna and rotate the variable condenser in the vicinity of the 2500 mark until this signal is picked up. Adjust the short-wave antenna trimmer (at the top of the small coil beneath the chassis deck) for maximum response on this signal.

PRODUCTION CHANGES

Receivers bearing serial numbers from 119,051 to 122,050—

The two resistors R11 and R12, shown by dotted lines on the schematic diagram were used in the circuit.

Receivers bearing serial numbers from 126,051 to 127,050—

a. R8 and R4, wire-wound tapped resistor, changed from part no. TTR-178 to part no. 2TR-221. In this new resistor R8 is 20,500 ohms, ½ watt, and R4 is 12,500 ohms, 1.5 watts.
b. The volume control was changed from part no. TTR-159A to TTR-159B. The latter control has 250 ohm bias stop.
c. R11 was omitted.
d. R12 was omitted.
e. The speaker was changed from part no. TTS-110 to part no. 2TS-162.

NOTE: Changes a, b, c and d were made simultaneously.

Receivers bearing serial numbers above 127,401—

a. R8 and R4, wire-wound tapped resistor, replaced by carbon resistors.
R8 is part no. DDR-122, 20,000 ohm ½ watt carbon resistor.
R4 is part no. 2TR-225, 12,000 ohm 2 watt carbon resistor.

Receivers bearing serial numbers above 726,018—

a. R14, 50,000 ohm 2 watt carbon resistor, was added. (Part no. 2TR-232.)
b. R12, 25,000 ohm ½ watt carbon resistor, was added. (Part no. GR-73.)
c. C18, a 0.5 mf 400 volt tubular condenser, was added. (Part no. EC-46.)
d. C5 and R5 were omitted and the grid return of the second i-f transformer was grounded to chassis.

Receivers bearing serial numbers above 750,450—

a. The wave-band switch (S1) was changed from part no. TTS-111E to part no. TTS-111H.
b. The tone-control switch (S2) was changed from part no. 2TS-145B to part no. 2TS-145D.
c. The volume control (R10, S2) was changed from part no. TTR-159B to part no. TTR-159C.
d. The airplane dial was changed from part no. 2TD-30A to part no. 2TD-30B.
NOTE: Above four revisions involve only changes in shaft lengths.

WHEN ORDERING REPLACEMENT PARTS SPECIFY PART NUMBERS

EMERSON PRODUCTION CHANGES AS OF 4/29/36
NOT ALREADY NOTED IN SERVICE NOTES

Chassis Model G-5; Cabinet Models 116 and 121

Receivers bearing serial numbers higher than 753,600:
The bias stop on the volume control, R-10, made 200 ohms instead of 250 and the part number was changed from TTR-159C to TTR-159D

R-3, 20,000 ohm resistor changed from ½ watt to 1 watt and part number changed from DDR-122 to GR-31.

C-10, .006 output condenser, put across 43 plate and screen, instead of plate to ground.

Receivers bearing serial numbers higher than 753,800:
R-6, 150,000 ohm resistor in 76 cathode circuit changed to 50,000 ohms, ½ watt; part number changed from LLR-152 to KR-53.
Recommended to cure microphonic 76's.

REPLACEMENT PARTS

*Item No.	Part No.	DESCRIPTION	PRICE List Price as of Effective as of Sept. 1st, 1935
T1	TTT-178	Broadcast antenna coil	$ .60
T2	TTT-177	Short-wave antenna coil	.40
T3	TTT-178	Short-wave oscillator coil	.80
T4	TTT-178	Composite broadcast oscillator and 456 kc first i-f transformer	1.20
T5	TTT-176A	456 kc second i-f transformer	.90
T6	BBT-114A	Power transformer	2.70
R1	TTR-175	300 ohm ¼ watt wire-wound resistor	.16
R2	TTR-201	3,000 ohm ¼ watt carbon resistor	.16
†R3, R4	TTR-178	Wire-wound tapped resistor R3—27,000 ohms, 2.5 watts R4—9,000 ohms, 1.5 watts	.40
†R5	HR-42	2 megohm ¼ watt carbon resistor	.16
R6	LLR-152	150,000 ohm ½ watt carbon resistor	.16
R7	KR-55	250,000 ohm ½ watt carbon resistor	.16
R8	KR-56	500,000 ohm ½ watt carbon resistor	.16
R9	TTR-174	410 ohm 1 watt wire-wound resistor	.16
†R10, S2	TTR-159A	Volume control with line switch—5,000 ohms (This volume control has a 150 ohm bias stop)	.80
†R11	LR-84	5,000 ohm ¼ watt carbon resistor	.16
†R12	LLR-147	100 ohm ½ watt wire-wound resistor	.16
†R13	GR-73	25,000 ohm ½ watt carbon resistor	.16
†R14	2TR-232	50,000 ohm 2 watt carbon resistor	.16
C1, C2	2TC-180	Two-gang variable condenser	1.35
C3, C17	TTC-176	Dual 0.02 mf, 400 volt tubular condenser	.20
C4	FC-29	0.02 mf, 200 volt tubular condenser	.16
†C5, C6, C7	AC-6	0.1 mf, 200 volt tubular condenser	.16
C8	AAC-114	0.001 mf mica condenser	.16
C9	BC-23	0.03 mf, 400 volt tubular condenser	.16
C10	HC-34	0.006 mf, 600 volt tubular condenser	.16
C11	2TC-189	0.015 mf, 1000 volt tubular condenser	.16
C12, C13, C14	TTC-189	Multiple dry electrolytic filter condenser C12—12 mf, 25 volt C13—6 mf, 400 volt C14—8 mf, 400 volt	2.20
C15	EEC-182	0.1 mf, 400 volt tubular condenser	.16
C16	TTC-177	0.01 mf, 800 volt tubular condenser	.16
†C18	EC-46	0.5 mf, 400 volt tubular condenser	.32
†	TTS-110	5" dynamic speaker	3.20
S1	TTS-111E	Wave-band switch	.40
S2	2TS-145B	Tone-control switch	.25
	XL-9	Pilot light, 6.3 volts, .25 amp. Mazda No. 46	.15
	2TD-30A	Airplane dial	1.20
	2NZ-306	Escutcheon with crystal	.50

† See Production Changes

PRICES ARE SUBJECT TO CHANGE WITHOUT NOTICE

*Item number locates the article on the schematic diagram.

MODELS K116, K121, K123

EMERSON RADIO & PHONO. CORP

Chassis K

Schematic, Voltage

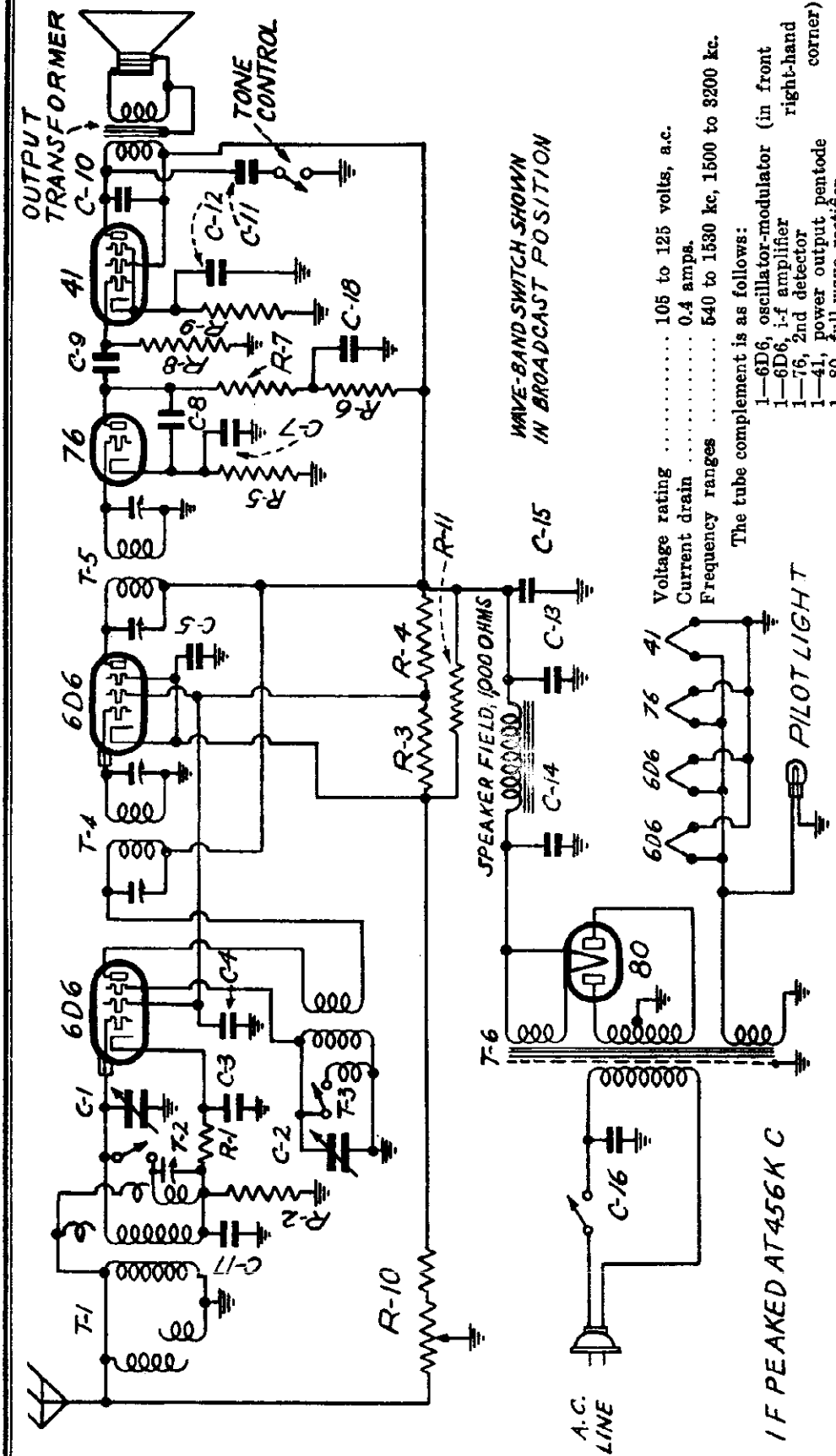

Voltage rating ..... 105 to 125 volts, a.c.
Current drain ..... 0.4 amps.
Frequency ranges ..... 540 to 1530 kc, 1500 to 3200 kc.

The tube complement is as follows:

1—6D6, oscillator-modulator (in front right-hand corner)
1—6D6, i-f amplifier
1—76, 2nd detector
1—41, power output pentode
1—80, full-wave rectifier.

VOLTAGE ANALYSIS

Readings should be taken with a 1000 ohms-per-volt meter. Voltages listed below are from point indicated to ground (chassis) with volume control turned on full and no signal. Line voltage for these readings was 117.5 volts, 60 cycles, a.c.

Tube	*Plate*	*Screen*	*Cathode*	*Fil.*
6D6 (in front right-hand corner)	242	130	21.5	6.3 a.c.
6D6 (i-f)	242	130	4.0	6.3 a.c.
76	100	—	9.8	6.3 a.c.
41	216	242	13.5	6.3 a.c.

B plus at filament of 80 tube—305 volts.
Voltage across speaker field—60 volts.

©John F. Rider, Publisher

MODELS K116, K121, K123
Chassis K

EMERSON RADIO & PHONO. CORP.

Alignment, Parts

I-f Alignment An oscillator with frequencies of 456, 1425 and 2500 kc is required. An output meter should be used across the voice coil or output transformer for observing maximum response.

Rotate the wave-band switch to the broadcast position, clockwise, and swing the variable condenser to the maximum capacity position. Feed 456 kc to the stator of the front (antenna) section of the variable condenser. Adjust the four i-f trimmers (at tops of i-f cans) for maximum response.

Short-wave Alignment

Rotate the wave-band switch to the short-wave position, counter-clockwise. Feed 2500 kc through the antenna and rotate the variable condenser in the vicinity of the 2500 mark until this signal is picked up. Adjust the short-wave antenna trimmer (at the top of the small coil beneath the chassis deck) for maximum response on this signal.

Broadcast Alignment (Use a .0002 mf condenser as a dummy antenna.)

With the wave-band switch in the broadcast position, set the dial pointer at 1425. Feed 1425 kc to the antenna and adjust first the oscillator trimmer (rear) and then the antenna trimmer (front) on the variable condenser for maximum response.

Location of Coils and Trimmer Adjustments

The two i-f transformers are located on top of the chassis deck. The second i-f is the one directly behind the variable condenser. Part no. TTT-173 is a composite broadcast oscillator coil and first i-f transformer.

The broadcast antenna coil is mounted underneath the chassis deck, directly below the variable condenser. The short-wave oscillator coil is mounted on the right-hand wall of the chassis. The short-wave antenna coil is located underneath the chassis deck near the oscillator coil. The trimmer for this short-wave antenna coil is mounted on the coil tubing.

The color coding of the leads of the composite first i-f transformer and oscillator coil, part no. **TTT-173**, is as follows:

B plus—red
Plate—blue
I-f and oscillator grid return—black
Suppressor grid—green with white tracer
I-f grid—green

The color coding of the leads of the second i-f transformer, part no. TTT-176A, is as follows:

Grid—green
Grid return—black
Plate—blue
B plus—red

The color coding of the leads on the power transformer is as follows:

Primary—two green leads.
High voltage secondary—two black leads.
High voltage secondary center-tap—yellow lead.
6.3 volt secondary—two heavy blue leads.
5 volt secondary—two heavy red leads.

With a few exceptions, the color coding of the general wiring is as follows:

Plate—blue
B plus—red
Screen—brown
Cathode—white or yellow
Grid—green
Filament and ground—black.

REPLACEMENT PARTS

*Item No.	Part No.	DESCRIPTION	PRICE List Prices as Effective as of Aug. 1st, 1936
T1	TTT-172	Broadcast antenna coil	$ .90
T2	TTT-177	Short-wave antenna coil	.60
T3	TTT-178	Short-wave oscillator coil	.30
T4	TTT-173	Composite broadcast oscillator and 456 kc first i-f transformer	1.80
T5	TTT-176A	456 kc second i-f transformer	1.35
T6	BBT-114A	Power transformer	4.05
R1	TTR-175	300 ohm ¼ watt wire-wound resistor	.16
R2	TTR-201	3,000 ohm ¼ watt carbon resistor	.16
R3	GR-31	20,000 ohm 1 watt carbon resistor	.16
R4	2TR-225	12,000 ohm 2 watt carbon resistor	.16
R5	KR-53	50,000 ohm ¼ watt carbon resistor	.16
R6	OR-73	25,000 ohm ¼ watt carbon resistor	.16
R7	KR-55	250,000 ohm ¼ watt carbon resistor	.16
R8	KR-56	500,000 ohm ¼ watt carbon resistor	.16
R9	TTR-174	410 ohm 1 watt wire-wound resistor	.16
R10	TTR-159F	Volume control with line switch—5,000 ohms (This volume control has 200 ohm bias stop)	1.20
R11	2TR-233	50,000 ohm 2 watt carbon resistor	.16
C1, C2	3KC-287	Two gang variable condenser	8.50
C3, C17	TTC-176	Dual 0.02 mf, 400 volt tubular condenser	.30
C4	FC-29	0.02 mf, 200 volt tubular condenser	.20
C5, C7	AC-6	0.1 mf, 200 volt tubular condenser	.20
C8	AAC-114	0.001 mf mica condenser	.20
C9	EC-23	0.03 mf, 400 volt tubular condenser	.20
C10	HC-34	0.006 mf, 600 volt tubular condenser	.20
C11	2TC-189	0.015 mf, 1000 volt tubular condenser	.20
C12, C13, C14	TTC-159	Multiple dry electrolytic filter condenser C12—12 mf, 25 volt C13—6 mf, 400 volt C14—8 mf, 400 volt	3.30
C15	EEC-132	0.1 mf, 400 volt tubular condenser	.20
C16	3LC-297	0.01 mf, 250 volt a.c. tubular condenser in metal container	.30
C18	IC-46	0.5 mf, 400 volt tubular condenser	.45
	2TS-162	6½" dynamic speaker	5.25
	TTS-111K	Wave-band switch	.60
	2TS-145E	Tone-control switch	.35
	XL-9	Pilot light, 6.3 volts, .25 amp., Mazda No. 46	.20
	2TZ-363	Dial face	.75
	3KZ-404	Dial drive belt	.10
	3CZ-337	Dial drive shaft and pulley	.10
	3CZ-339	Idler pulley	.05
	3CZ-340	Idler pulley spring	.05
	3CZ-341	Condenser shaft pulley	.10
	3FZ-353	Dial pointer	.10
	3CZ-350	Escutcheon with crystal (For Models K-116 and K-123)	1.05
	3CZ-350A	Escutcheon with crystal (For Model K-121)	1.05

© John F. Rider, Publisher

EMERSON RADIO & PHONO. CORP.

MODEL 117
Chassis C5
Schematic

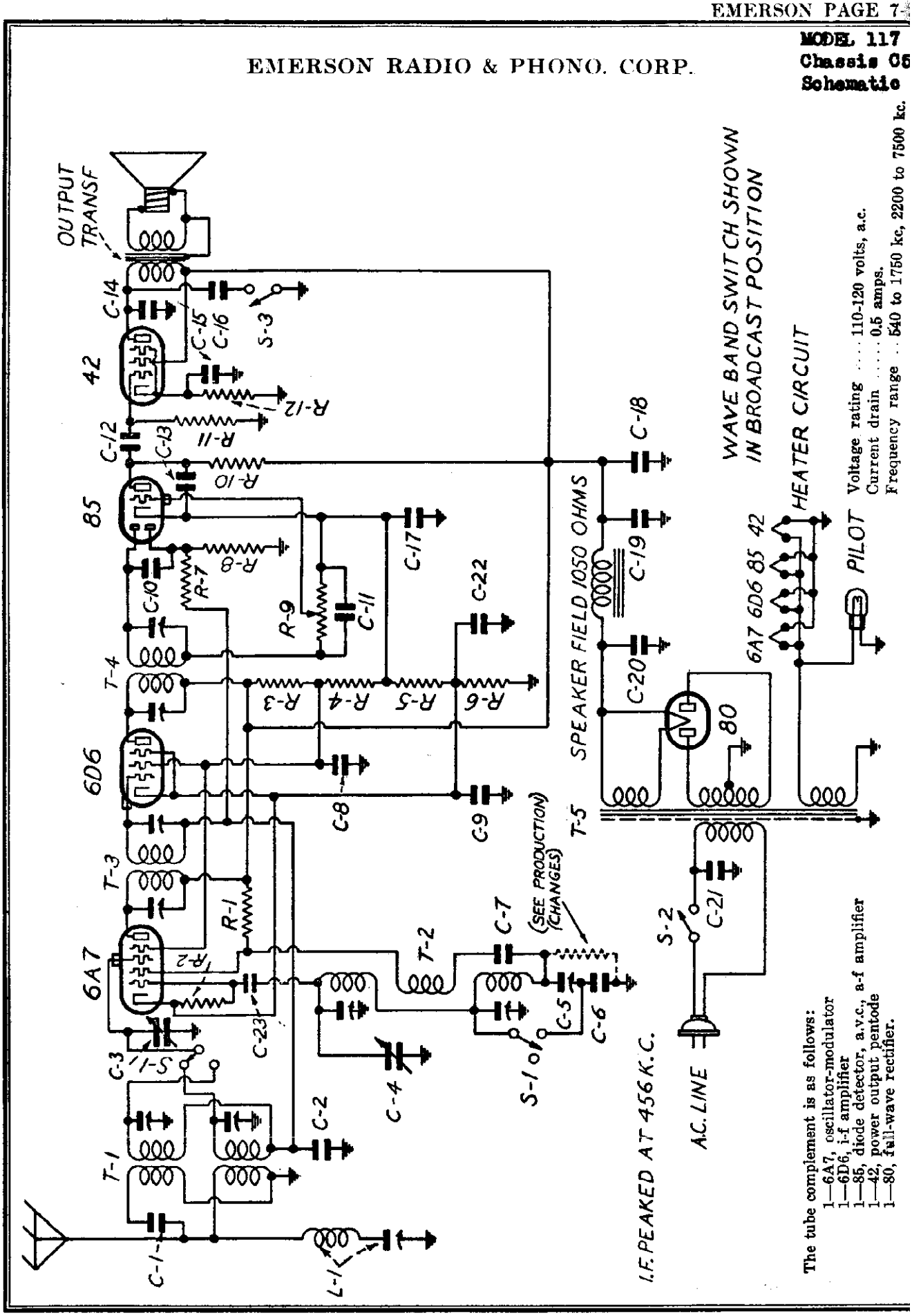

Voltage rating .... 110-120 volts, a.c.
Current drain ..... 0.5 amps.
Frequency range .. 540 to 1750 kc, 2200 to 7500 kc.

The tube complement is as follows:
1—6A7, oscillator-modulator
1—6D6, i-f amplifier
1—85, diode detector, a.v.c., a-f amplifier
1—42, power output pentode
1—80, full-wave rectifier.

©John F. Rider, Publisher

GENERAL NOTES

1. The receiver should never be turned on with either the speaker plug or the 42 tube out of its respective socket, since the rapid rise in rectifier voltage will damage the electrolytic condenser.
2. When replacing the chassis in the cabinet take precautions to keep any part of the dial and condenser assembly from touching the cabinet, otherwise microphonism will result.
3. The color coding of the i-f transformers is as follows:

Grid—green	Grid return—black
B plus—red	Plate—blue

4. The color coding of the power transformer is as follows:

Primary—two black leads
High-voltage secondary—two red leads
High-voltage secondary center tap—red and yellow lead
6.3 volt secondary—two green leads
5 volt secondary—two yellow leads.

5. The adjustable padding condenser for the broadcast band is mounted underneath the chassis (in the corner near the wave-band switch) with the screw adjustment accessible through a hole in the top of the chassis. The short-wave band has a fixed padder which is a 1350 mmf molded mica condenser. (Note that this condenser is coded 1300 mmf.) When replacing this fixed padder be careful to use a condenser which has a capacity within 2% of 1350 mmf, otherwise the short-wave coils may not track.
6. With a few exceptions, the color coding of the general wiring is as follows:

Plate—blue	Cathode—white or yellow
B plus—red	Grid—green
Screen—brown	Fil. and ground—black.

ADJUSTMENTS

An oscillator with frequencies of 456, 600, 1500 and 6000 kc should be used.
An output meter should be used across the voice coil or output transformer for observing maximum response.

Location of Coils and Trimmer Adjustments

The two i-f transformers are located on top of the chassis deck. The second i-f is the one directly behind the variable condenser. The four trimmers, two for each transformer, are accessible through holes in the tops of the cans.

The 456 kc wave trap is located on top of the chassis deck between the 6A7 tube and the first i-f transformer.

The adjustable padding condenser for the broadcast band is mounted underneath the chassis (in the corner near the 6A7 tube) with the screw adjustment accessible through a hole in the top of the chassis.

The antenna coils for the broadcast and short-wave bands are wound on one form and mounted underneath the chassis deck directly behind the adjustable padding condenser. The trimmers for these coils are also accessible through holes in the top of the chassis. The trimmer nearest the front of the chassis is the short-wave antenna trimmer. The trimmer farthest from the front of the chassis is the broadcast antenna trimmer.

The oscillator coils for the broadcast and short-wave bands are wound on one form and mounted underneath the chassis deck near the variable condenser. The trimmers for these coils are accessible through holes in the top of the chassis. The trimmer nearest the front of the chassis is for the short-wave oscillator coil and the trimmer farthest from the front is for the broadcast oscillator coil.

I-f and Wave-trap Alignment

Rotate the wave-band switch to the broadcast position, clockwise. Set the variable condenser at the minimum capacity position and feed 456 kc to the grid cap of the 6A7 tube. Adjust the four i-f trimmers for maximum response. Feed 456 kc to the antenna lead and adjust the wave-trap trimmer (mounted on wave-trap) for *minimum response.*

Short-wave Alignment

Use a 400 ohm dummy antenna (a 400 ohm resistor in series with the test oscillator antenna lead) in aligning the short-wave coils. Rotate the wave-band switch to the short-wave position (counter-clockwise) and set the dial pointer exactly at 6 megacycles. Feed 6000 kc and adjust the short-wave oscillator trimmer (closest to front beside the variable condenser) for maximum response and then adjust the antenna trimmer (left side of top of chassis, closest to front). Be very careful to choose the minimum capacity peak on the oscillator trimmer. (See General Instructions below.)

Broadcast Alignment

Use a standard dummy antenna in aligning the broadcast coils. (A .0002 condenser may be used as a substitute.) Rotate the wave-band switch to the broadcast position, clockwise. Set the dial pointer at 600 and feed 600 kc. Adjust the broadcast series padder (in corner near 6A7 tube) for maximum response. Move the dial pointer to 1600 and feed 1600 kc. Adjust the broadcast oscillator trimmer (farthest from front beside the variable condenser) for maximum response and then adjust the broadcast antenna trimmer (farthest from front at left side of chassis). Return pointer to 600, feed 600 kc and readjust the broadcast series padder, rocking the variable condenser (rotate the variable condenser shaft back and forth through a small arc) for maximum response.

GENERAL INSTRUCTIONS

The set's oscillator is higher in frequency than the signal, so images should be observed on the low frequency side of the signals.

Always choose the minimum capacity peak on oscillator trimmers and maximum capacity peaks on antenna trimmers. The last motion in adjusting trimmers should always be a tightening one, not a loosening one.

Never leave a trimmer with the outside plate so loose that there is no tension on the screw. Either bend the plate up or remove the screw entirely.

Always use as weak a test signal as possible during alignment.

VOLTAGE ANALYSIS

Readings should be taken with a 1000 ohms-per-volt meter. Voltages listed below are from point indicated to ground (chassis). Line voltage for these readings was 117.5 volts, 60 cycles, a.c.

Tube	*Plate*	*Screen*	*Cathode*	*Osc. Plate*	*Fil.*
6A7	255	90	3.5	170	6.3 a.c.
6D6	255	90	3.5	—	6.3 a.c.
85	97	—	5.5	—	6.3 a.c.
42	240	255	16.0	—	6.3 a.c.

B plus at filament of 80 tube—325 volts
Voltage across speaker field—70 volts.

REPLACEMENT PARTS

PRICES ARE SUBJECT TO CHANGE WITHOUT NOTICE

*Item	Part No.	DESCRIPTION	List Price Effective as of Sept. 1st, 1939 PRICE
L1	MMT-149	456 kc adjustable wave trap	$ .85
T1	2NT-226	Two-band antenna coil	1.10
T2	2NT-227	Two-band oscillator coil	.90
T3	2NT-220	456 kc first i-f transformer	.90
T4	2NT-221	456 kc second i-f transformer	.90
T5	2NT-223	Power transformer	2.70
R1	LR-60	20,000 ohm ½ watt carbon resistor	.16
R2	KR-58	50,000 ohm ½ watt carbon resistor	.16
R3	BR-12	25,000 ohm 1 watt carbon resistor	.16
R4	2NR-217	40,000 ohm 1 watt carbon resistor	.16
R5	FPR-126	500 ohm ½ watt wire-wound resistor	.16
R6	IIR-180	150 ohm ½ watt wire-wound resistor	.16
R7, R8	KR-57	1 megohm ½ watt carbon resistor	.16
R9, S3	2NR-214	Volume control with line switch—250,000 ohms	.80
R10	KR-54	100,000 ohm ½ watt carbon resistor	.16
R11	KR-56	500,000 ohm ½ watt carbon resistor	.16
R12	CCR-115	450 ohm 1 watt wire-wound resistor	.16
C1, C23	AAC-106A	0.00006 mf mica condenser	.16
C2, C3	EC-12	0.05 mf, 200 volt tubular condenser	.16
C3, C4	2NC-223	Two gang variable condenser	2.00
C5	2NC-231	Single adjustable padding condenser Range—500 to 600 mmf	.35
C6	2NC-230	0.00135 mf mica condenser	.20
C7	EC-88	0.01 mf, 400 volt tubular condenser	.16
C9	BC-13	0.25 mf, 200 volt tubular condenser	.16
C10, C11, C22	AC-7A	0.00025 mf mica condenser	.16
C12	LC-65	0.02 mf, 400 volt tubular condenser	.16
C13	IC-47	0.0005 mf mica condenser	.16
C14	EC-115	0.006 mf, 1000 volt tubular condenser	.16
C15	IC-43A	Tubular 5 mf, 25 volt dry electrolytic condenser	.60
C16	2TC-189	0.015 mf, 1000 volt tubular condenser	.16
C17	AC-6	0.1 mf, 200 volt tubular condenser	.16
C18	EEC-132	0.1 mf, 400 volt tubular condenser	.16
C19	2NC-247	16 mf, 405 volt wet electrolytic condenser (regulating type)	.80
C20	2NC-246	16 mf, 450 volt wet electrolytic condenser	.80
C21	2NC-250	0.01 mf, 250 volt a-c condenser in tubular metal container	.20
	2NS-122	6½" dynamic speaker	3.75
S1	TTS-111E	Wave-band switch	.40
S2	2TS-145B	Tone control switch	.25
	XL-3	Pilot light, 6.3 volt, .25 amp. Mazda No. 46	.15
	2ND-34B	Airplane dial	1.30
	2N2-306	Escutcheon with crystal	.50
	2TM-211	Escutcheon reflector ring	.10

PRODUCTION CHANGES

In early production:

a. Airplane dial was part number 2ND-34 and had a grey dial face. Later dial, part number 2ND-34B, has a black dial face.

b. C19 and C20 were each 12 mf, 450 volt electrolytics.

c. R2 was originally in position indicated by dotted lines. It was later placed across the oscillator grid and cathode of the 6A7 tube (as now shown in the schematic) and at the same time C23 was added and C22 omitted.

©John F. Rider, Publisher

EMERSON RADIO & PHONO. CORP.

MODELS 117LW, L117LW
L122LW, L133LW
L135LW, L141LW
Chassis K5 & LLW
Schematic

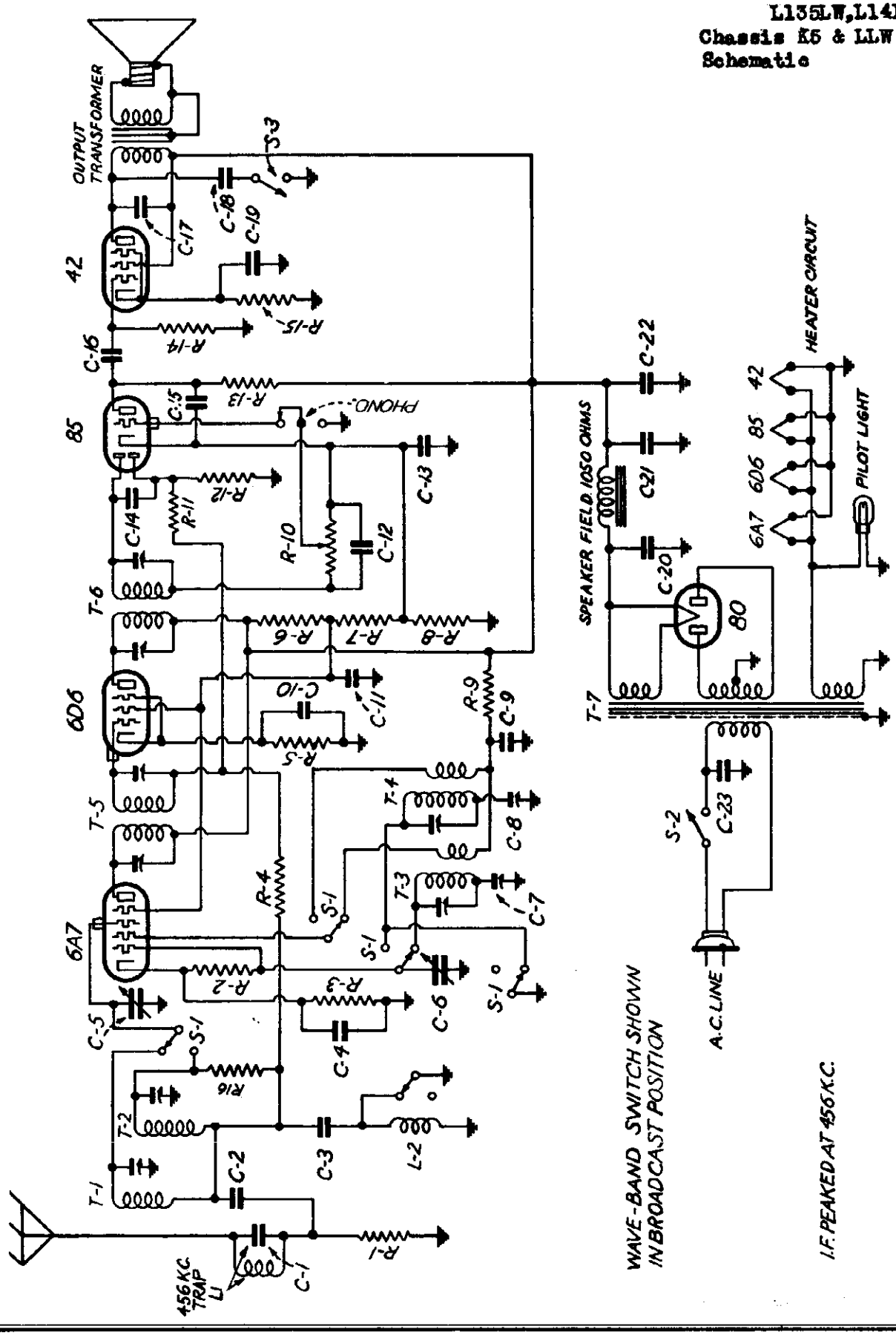

©John F. Rider, Publisher

MODELS 117LW, L117LW, L122LW, L135LW, EMERSON RADIO & PHONO. CORP. L141LW

Chassis K6 & L6W

Notes, Voltage, Parts Alignment

Chassis Models K6 and L6W
(Chassis model number is printed on the license plate)

Voltage rating .....105-125 volts a.c. (unless otherwise specified)
Current drain ..... 0.5 amps.
Frequency range .....540 to 1750 kc., 150 to 375 kc.

NOTE: The two frequency ranges are referred to as broadcast and long-wave which, in Europe, are commonly known as medium-wave and long-wave broadcast, respectively.

GENERAL NOTES

1. The receiver should never be turned on with either the speaker plug or the output tube out of its respective socket, since the rapid rise in rectifier voltage will damage the electrolytic condenser.
2. When replacing the chassis in the cabinet take precautions to keep any part of the dial and condenser assembly from touching the cabinet, otherwise microphonism will result.
3. The color coding of the i-f transformers is as follows:
   Grid—green — Grid return—black
   B plus—red — Plate—blue
4. The color coding of the power transformer is as follows:
   Primary—two black leads — 6.3 volt secondary—two green leads
   High-voltage secondary—two red leads — 5 volt secondary—two yellow leads
   High-voltage secondary center tap—red and yellow lead
5. The dial adjustable padding condenser is mounted on the left side of the front chassis wall. The hexagon nut is the adjustment for the long-wave band and the screw in the center of this nut is the adjustment for the broadcast band.
6. With few exceptions, the color coding of the general wiring is as follows:
   Plate—blue — Cathode—white or yellow
   B plus—red — Grid—green
   Screen—brown — Fil. and ground—black

Tube Data

The tube complement is as follows:
1-6A7, oscillator-modulator
1-6D6, i-f amplifier
1-85, diode detector, a.v.c., a-f amplifier
1-42 or 41, power output pentode.
(In chassis model LLW the output tube is a 41. The 42 tube was used only in the K6 chassis)
1-80, full-wave rectifier.

VOLTAGE ANALYSIS

Reading should be taken with a 1000 ohms-per-volt meter. Voltages listed below are from point indicated to ground with volume control turned on full and no signal. Line voltage for these readings was 117.5 volts, 60 cycles, a.c.

Tube	Plate	Screen	Cathode	Osc. Plate	Fil.
6A7	250	90	3.8	1.45	6.3 a.c.
6D6	250	90	3.3	—	6.3 a.c.
85	85	—	4.1	—	6.3 a.c.
42 or 41	240	250	18.0	—	6.3 a.c.

B plus at filament of 80 tube—325 volts.
Voltage across speaker field—75 volts.

ADJUSTMENTS

An oscillator with frequencies of 172.5, 345, 456, 600 and 1600 kc should be used.
An output meter should be used across the voice coil or output transformer for observing maximum response.
Use a standard dummy antenna when aligning either band. A .0002 mf condenser may be used as a substitute.

Location of Coils and Trimmer Adjustments

The two i-f transformers are located on top of the chassis deck. The second i-f is the one directly behind the variable condenser. The four trimmers, two for each transformer, are accessible through holes in the tops of the cans.

The dual adjustable padding condenser is mounted on the left side of the front chassis wall. (See General Notes).

The antenna coils for the broadcast and long-wave bands are wound on one form and mounted underneath the chassis deck directly behind the adjustable padding condenser. The trimmers for these coils are accessible through holes in the top of the chassis. The trimmer nearest the front of the chassis is the broadcast antenna trimmer. The trimmer farthest from the front of the chassis is the long-wave antenna trimmer.

The oscillator coils for the broadcast and long-wave bands are wound on one form and mounted underneath the chassis deck near the variable condenser. The trimmers for these coils are also accessible through holes in the top of the chassis. The trimmer nearest the front of the chassis is for the broadcast oscillator coil and the trimmer farthest from the front is for the long-wave oscillator coil.

I-f Alignment

Rotate the wave-band switch to the broadcast position, clockwise. Swing the variable condenser to the *minimum capacity* position and feed 456 kc to the grid cap of the 6A7 tube. Adjust the four i-f trimmers for maximum response.

Broadcast Alignment

With the switch in the broadcast position set the dial pointer to 60 and feed 600 kc through the dummy antenna. Adjust the broadcast series padding condenser (slotted screw on dual unit at left hand side of front chassis wall) for maximum response. Move the pointer to 150 and feed 1600 kc. Adjust the broadcast oscillator trimmer (closest to front beside variable condenser) for maximum response and then adjust the broadcast antenna trimmer (closest to front at left side of chassis) for maximum response. Return pointer to 60, feed 600 kc and readjust the padding condenser while rocking the variable condenser (rotate back and forth through small arc) for maximum response.

Long-Wave Alignment

Rotate the wave-band switch to the long-wave position, counter-clockwise, and set the dial pointer at 345. Feed 345 kc through the dummy antenna and adjust the long-wave oscillator trimmer (farthest from front beside variable condenser) for maximum response and then adjust the long-wave antenna trimmer (farthest from front at left side of chassis). Move the pointer to 172.5 kc and feed 172.5 kc. Adjust the long-wave series padder (hexagon nut on dual unit) for maximum response. Return the pointer to 345 kc and adjust the long-wave oscillator and antenna trimmers and then return to 172.5 kc and readjust the long-wave padding condenser. If appreciable shift is noticed align again at 345 kc and then at 172.5 kc repeating this procedure until no further change occurs.

GENERAL INSTRUCTIONS

Always choose the minimum capacity peak on oscillator trimmers and maximum capacity peaks on antenna trimmers. The last motion in adjusting trimmers should always be a tightening one, not a loosening one.

Always use as weak a test signal as possible during alignment.

Never leave a trimmer with its outside plate so loose that there is no tension on the screw. Either bend the plate up or remove the screw entirely.

REPLACEMENT PARTS LIST

PRICES ARE SUBJECT TO CHANGE WITHOUT NOTICE

Item	Part No.	DESCRIPTION	PRICE
L1	2ZT-268	Fixed 456 kc wave-trap	$ .50
L2	2ZT-267	Trap inductor	.10
T1, T2	2ZT-265	Two band antenna coil assembly	1.10
T3, T4	2ZT-266	Two band oscillator coil assembly	.95
T5	2NT-220	456 kc first i-f transformer	.90
T6	2NT-221	456 kc second i-f transformer	.90
T7	2NT-223	Power transformer	2.70
R1	LR-64	5,000 ohm ½ watt carbon resistor	.16
R3	KR-53	50,000 ohm ¼ watt carbon resistor	.16
R4	CCR-140	250 ohm ½ watt wire-wound resistor	.16
R4, R14	KR-56	500,000 ohm ¼ watt carbon resistor	.16
R5	2ZR-231	450 ohm ½ watt wire-wound resistor	.16
R6	BR-15	25,000 ohm 1 watt carbon resistor	.16
R7	2NR-217	40,000 ohm 1 watt carbon resistor	.16
R8	FR-79	1,000 ohm ¼ watt carbon resistor	.16
R9	LR-66	90,000 ohm ¼ watt carbon resistor	.16
R10, 32	2NR-214D (for LLW chassis)	Volume control with line switch—250,000 ohms	.90
	2NR-214 (for K6 chassis)	Volume control with line switch—250,000 ohms	.80
R11, R12, R16	KR-57	1 megohm ⅛ watt carbon resistor	.16
R13	KR-54	100,000 ohm ¼ watt carbon resistor	.16
R15	CCR-116	450 ohm 1 watt wire-wound resistor	.16
C1		Condenser supplied with trap 2ZT-268	
C2	CCC-127	0.01 mf, 200 volt tubular condenser	.16
C3	2ZC-253	0.0025 mf mica condenser	.20
C4, C16, C13	AC-4	0.1 mf, 200 volt tubular condenser	.16
C5, C6	2NC-222 (for K7 chassis)	Two-gang variable condenser	2.00
	2EC-224 (for LLW chassis)	Two-gang variable condenser	2.45
C7, C8	2ZC-257	Dual adjustment padding condenser C7-250 to 500 mmf C8-100 to 200 mmf	.45
C9	KC-56	0.01 mf, 400 volt tubular condenser	.16
C11,	BC-12	0.05 mf, 200 volt tubular condenser	.16
C12, C15	IC-47	0.0005 mf mica condenser	.16
C14	AC-7A	0.00025 mf mica condenser	.16
C16	LC-65	0.02 mf, 400 volt condenser	.16
C17	ZC-215	0.006 mf, 1000 volt tubular condenser	.16
C18	2TC-180	0.015 mf, 1000 volt tubular condenser	.16
C19	IC-42A	Tubular 5 mf, 25 volt dry electrolytic condenser	.60
C20	2NC-246	16 mf, 450 volt wet electrolytic condenser	.80
C21	2NC-247	16 mf, 400 volt wet electrolytic condenser (regulating type)	
C22	IC-46	0.5 mf, 400 volt tubular condenser	.20
C23	2NC-250	0.01 mf, 250 volt a.c. tubular condenser in metal container	.20
	2NR-122	6½" dynamic speaker	2.75
	2ZS-162 (for K7 chassis)	Wave-band switch	1.15
	2ZS-162A (for LLW chassis)	Wave-band switch	1.15
	2TS-145B (for K7 chassis)	Tone-control switch	.85
	2TS-145E (for LLW chassis)	Tone-control switch	.85
	XL-9	Pilot light, 6.3 volt .25 amp., Mazda No. 46	.15
	2ZD-46 (for K6 chassis)	Airplane dial	1.30
	2NE-206 (for K6 chassis)	Dial escutcheon	.50
	2CE-250 (for LLW chassis)	Dial escutcheon	.70
	2LZ-466 (for LLW chassis)	Drive belt	.10

©John F. Rider, Publisher

EMERSON RADIO & PHONO. CORP.

MODELS F117, F122
F133, F135
F141
Chassis F
Schematic

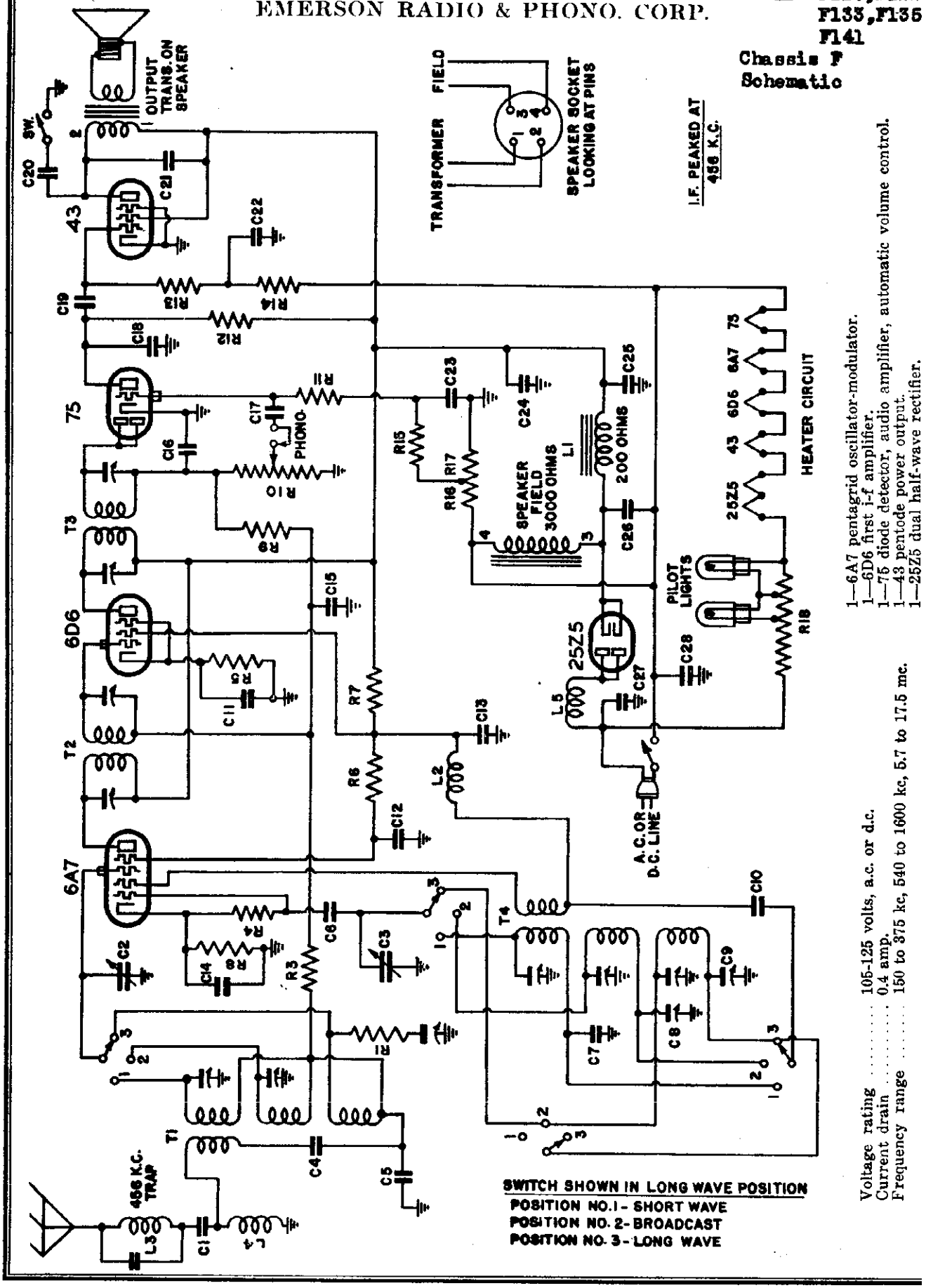

1—6A7 pentagrid oscillator-modulator.
1—6D6 first i-f amplifier.
1—75 diode detector, audio amplifier, automatic volume control.
1—43 pentode power output.
1—25Z5 dual half-wave rectifier.

Voltage rating ..... 105-125 volts, a.c. or d.c.
Current drain ..... 0.4 amp.
Frequency range ..... 150 to 375 kc, 540 to 1600 kc, 5.7 to 17.5 mc.

©John F. Rider, Publisher

ADJUSTMENTS

An oscillator with frequencies of 150, 350, 456, 600, 1500 and 15,000 kc should be used.

An output meter should be used across the voice coil or output transformer for observing maximum response.

Use a standard dummy antenna when aligning either the long-wave or medium-wave bands. A .0002 mf condenser may be used as a substitute. When aligning the short-wave band use a 400 ohm dummy antenna (a 400 ohm resistor in series with antenna lead).

Location of Coils and Trimmers

The two i-f transformers are located on top of the chassis deck. The second i-f transformer is the one directly behind the variable condenser. The four trimmers, two for each transformer, are accessible through holes in the tops of the cans.

The dual adjustable padding condenser is mounted on the left side of the front chassis wall.

The antenna coils for the three bands are wound on one form and mounted underneath the chassis deck directly behind the adjustable padding condenser. The trimmers for these coils are accessible through holes in the top of the chassis. The trimmer nearest the front of the chassis is the medium-wave antenna trimmer. The central trimmer is the short-wave antenna trimmer. The trimmer farthest from the front of the chassis is the long-wave antenna trimmer.

The oscillator coils for the three bands are wound on one form and mounted underneath the chassis deck near the variable condenser. The trimmers for these coils are also accessible through holes in the top of the chassis. The trimmer nearest the front of the chassis is the medium-wave oscillator trimmer. The central trimmer is the short-wave oscillator trimmer. The trimmer farthest from the front of the chassis is the long-wave oscillator trimmer.

I-f Alignment

Rotate the wave-band switch to the medium-wave (central) position and set the variable condenser to minimum. Feed 456 kc to the grid cap of the 6A7 tube. Adjust the four i-f trimmers for maximum response.

Long-Wave Alignment

With the wave-band switch at long-wave (clockwise) position set the dial pointer at 15 and feed 150 kc to antenna. Adjust the long-wave series padder (hex nut on dual padder) for maximum response. Move pointer to 35 and feed 350 kc to antenna. Adjust the long-wave oscillator trimmer then the long-wave antenna trimmer for maximum response. Reset pointer to 15, feed 150 kc and rock (rotate back and forth through a small arc) the variable condenser while adjusting long-wave series padder for maximum response. Reset pointer to 35, feed 350 kc and check alignment. If readjustment is necessary return to 150 kc and repeat entire procedure.

Medium-Wave Alignment

Set switch at medium-wave (central) position and dial pointer at 60. Feed 600 kc to antenna and adjust medium-wave series padder (slotted screw on dual padder) for maximum response. Move pointer to 150, feed 1500 kc and adjust medium-wave oscillator trimmer and then the medium-wave antenna trimmer for maximum response. Reset pointer to 60, feed 600 kc and rock variable condenser while readjusting medium-wave series padder for maximum response. Reset pointer to 150, feed 1500 kc and check alignment. If readjustment is necessary return to 600 and repeat entire procedure.

Short-Wave Alignment

Set wave-band switch at short-wave (counter-clockwise) position. Set pointer at 15, feed 15 megacycles to antenna and adjust short-wave oscillator trimmer and then short-wave antenna trimmer for maximum response.

GENERAL INSTRUCTIONS

Always choose the minimum capacity peak on oscillator trimmers and maximum capacity peaks on antenna trimmers. The last motion in adjusting trimmers should always be a tightening one, not a loosening one.

Always use as weak a test signal as possible during alignment.

Never leave a trimmer with its outside plate so loose that there is no tension on the screw. Either bend the plate up or remove the screw entirely.

GENERAL NOTES

1. Only the Models F117 and F135 are available for 210-250 volt operation. The standard 105-125 volt Model F117 and F135 receivers may be easily converted for 210-250 volt operation by replacing the ballast resistor. Resistor part no. 3ER-248 is for 105 to 125 volt operation. Resistor part no. 3ER-249 is for 210 to 250 volt operation. Due to the greater amount of heat radiated from the higher voltage resistor, part no. 3ER-249, this conversion can be made only on Models F117 and F135. For Models F122, F133 and F141 it is imperative that an *external* line ballast resistor be used for voltages above 125.
2. If replacements are made or the wiring disturbed in the r-f section of the circuit, the receiver should be carefully re-aligned.
3. One side of the power line is directly grounded to the chassis base. Under no circumstances, therefore, should a ground wire be permitted to come in contact with any metal part of the receiver.
4. When operating the receiver on d.c., it may be necessary to reverse the line plug for correct polarity.
5. When replacing the chassis in the cabinet take precautions to keep any part of the dial and condenser assembly from touching the cabinet, otherwise microphonism will result.
6. The color coding of the i-f transformers is as follows.

B plus—red	Grid return—black
Grid—green	Plate—blue

7. An electrical phonograph pick-up may be connected to this receiver for playing records. Connections to this receiver may be made at the "phono" jack which is located on the rear wall of the receiver chassis. A separate volume control of the potentiometer type is necessary in addition to the phonograph pick-up. The two pick-up lead wires should be connected to the two outside terminals of this volume control. A lead from the center terminal should be plugged into the right-hand hole in the phono jack. A lead from one of the outside terminals of the volume control should be plugged into the other hole in the phone jack. The leads to be plugged in the jack should be fitted with tips. The volume control in the receiver should be turned down to the zero volume position when operating the phonograph. The required over-all resistance of the separate volume control will, of course, depend on the type of phonograph pick-up to be used. A matching input transformer must be used if the pick-up is of the low impedance type. In this case the volume control is connected to the secondary of the transformer. It is important that the phonograph leads be removed from the jack when it is desired to operate the receiver for ordinary radio reception.
8. An efficient antenna system (often called aerial) is necessary to enable a full realization of the merits of the receiver. The Emerson All-Wave Antenna is especially designed for high efficiency and reduction of noise on all three frequency ranges. Complete instructions for the installation of this antenna are supplied with each kit.

VOLTAGE ANALYSIS

Readings should be taken with a 1000 ohms-per-volt meter. Voltages listed below are from point indicated to ground (chassis) with the volume control turned on full and no signal. Line voltage for these readings was 117.5 volts, 60 cycles, a.c.

Tube	Plate	Screen	Cathode	Osc. Plate	Fil.
6A7	100	45	*1.1	80	6.3
6D6	100	90	2	—	6.3
75	45	—	0	—	6.3
43	88	100	0	—	24

Voltage across speaker field—125

Voltage across filter choke—10

The 250 ohm bias resistor, R14 and R15 on schematic diagram, is located underneath the chassis near the volume control. Voltage across the two outside terminals of this resistor—12. Voltage from chassis to central terminal of resistor—1.

The voltage drop across the ballast resistor part no. 3ER-248 (R18—see schematic diagram) is 49 volts measured between pins 3 and 8. This resistor is for 105 to 125 volt operation.

The voltage drop across the ballast resistor part no. 3ER-249 is 186 volts measured between pins 3 and 7. This resistor is for 210 to 250 volt operation.

**On receivers bearing serial numbers below 847,450 this voltage is 2 volts.*

PRODUCTION CHANGES

a. In receivers bearing serial numbers between 861,950 and 862,950 C21 was .006 mf, 600 volt tubular condenser.

b. In receivers bearing serial numbers below 861,950 r-f choke L5 was not in the circuit.

c. In receivers bearing serial numbers below 847,350 the 6A7 and 6D6 cathodes were connected together. R5 was 150 ohm, ½ watt wire-wound resistor and C11 was .25 mf, 200 volt tubular condenser. R8 and C14 were not in the circuit. The screen of 6D6 was connected to B plus through a separate 5000 ohm ¼ watt carbon resistor and by-passed with a .1 mf, 200 volt tubular condenser. R11 and R13 were 250,000 ¼ watt carbon resistors. R1 was a 500,000 ohm ¼ watt carbon resistor and was connected directly across the long-wave antenna coil secondary.

REPLACEMENT PARTS LIST

PRICES ARE SUBJECT TO CHANGE WITHOUT NOTICE. List Prices as effective as of Aug. 1st, 1936

*Item No.	Part No.	DESCRIPTION	PRICE
L1	2CT-207C	Iron-core filter choke	$ .90
L2, L4	3ET-299	R-f choke—5 millihenries	.55
L3	22T-268	456 kc wave-trap	.75
L5	3ET-315	R-f choke—400 microhenries	.30
T1	3ET-297	Three-band antenna coil	2.05
T4	3ET-298	Three-band oscillator coil	1.90
T2	2NT-280	456 kc first i-f transformer	1.35
T3	2NT-281	456 kc second i-f transformer	1.35
R1	TTR-201	3,000 ohm ¼ watt carbon resistor	.16
R8, R12, R15	KR-55	250,000 ohm ¼ watt carbon resistor	.16
R4	KR-53	50,000 ohm ¼ watt carbon resistor	.16
R5, R3	AAR-119	300 ohm ½ watt wire-wound resistor	.16
R6	LR-60	20,000 ohm ¼ watt carbon resistor	.16
R7	LR-54	5,000 ohm ¼ watt carbon resistor	.16
R9	KR-57	1 megohm, ¼ watt carbon resistor	.16
R10	2NR-214D	Volume control with switch—250,000 ohms	1.20
R11, R13	KR-54	500,000 ohm ¼ watt carbon resistor	.16
R14	QR-73	25,000 ohm ¼ watt carbon resistor	.16
R16, R17	2CR-211	Metal-clad, 1 watt wire-wound resistor R16—330 ohms R17— 20 ohms	.35
R18	3ER-248	Plug-in type ballast resistor for 105 to 125 volt operation (See General Notes)	.80
C1, C4			
C10, C17	FC-29	.02 mf, 200 volt tubular condenser	.20
C2, C3	3EC-284	Two-gang variable condenser	3.65
C5	2ZC-255	0.0025 mf mica condenser	.20
C6	AAC-106A	0.00005 mf mica condenser	.20
C7	3EC-286	0.0024 mf mica condenser	.20
C8, C9	2ZC-257	Dual adjustable padding condenser C8—250 to 500 mmf. C9—100 to 200 mmf.	.55
C11, C12, C14			
C22, C26, C24	AC-6	0.1 mf, 200 volt tubular condenser	.20
C13	YC-96A	4 mf, 150 volt tubular dry electrolytic condenser	1.05
C15	RC-12	0.05 mf, 200 volt tubular condenser	.20
C16, C18	AC-7A	0.00025 mf mica condenser	.20
C19	LC-65	0.02 mf, 400 volt tubular condenser	.20
C20	Q6C-178	0.015 mf, 600 volt tubular condenser	.20
C21	TTC-177	0.01 mf, 600 volt tubular condenser	.20
C25, C26	2EC-282	20 mf, 200 volt wet electrolytic condenser	1.00
C27, C28	2EC-206	0.01 mf, 400 volt tubular condenser	.20
	3ES-175	6½" dynamic speaker	5.60
	3ES-197	Wave-band switch	1.10
	2TS-145E	Tone-control switch	.35
	XL-8	Pilot light, 6.3 volt, .25 amp., Mazda No. 46	.20
	3CZ-294	Dial face	.75
	3CZ-336A	Dial drive belt	.10
	3CZ-337	Dial drive shaft and pulley	.10
	3CZ-339	Dial idler pulley	.05
	3CZ-340	Dial idler pulley spring	.05
	3CZ-341	Condenser shaft pulley	.10
	3PZ-353	Dial pointer	.10
	3CZ-350	Escutcheon with crystal	1.05

When ordering replacement parts specify part number

*Item number locates the article on the schematic diagram.

©John F. Rider, Publisher

EMERSON RADIO & PHONO. CORP.

MODELS L117, L12
L133, L13
L141
Chassis L
Schematic

The tube complement is as follows:
1—6A7, oscillator-modulator
1—6D6, i-f amplifier
1—85, diode detector, a.v.c., a-f amplifier
1—41, power output pentode
1—80, full-wave rectifier.

Voltage rating ..... 105 to 125 volts, a.c.
Current drain ..... 0.5 amps.
Frequency range ... 540 to 1750 kc, 2200 to 7500 kc.

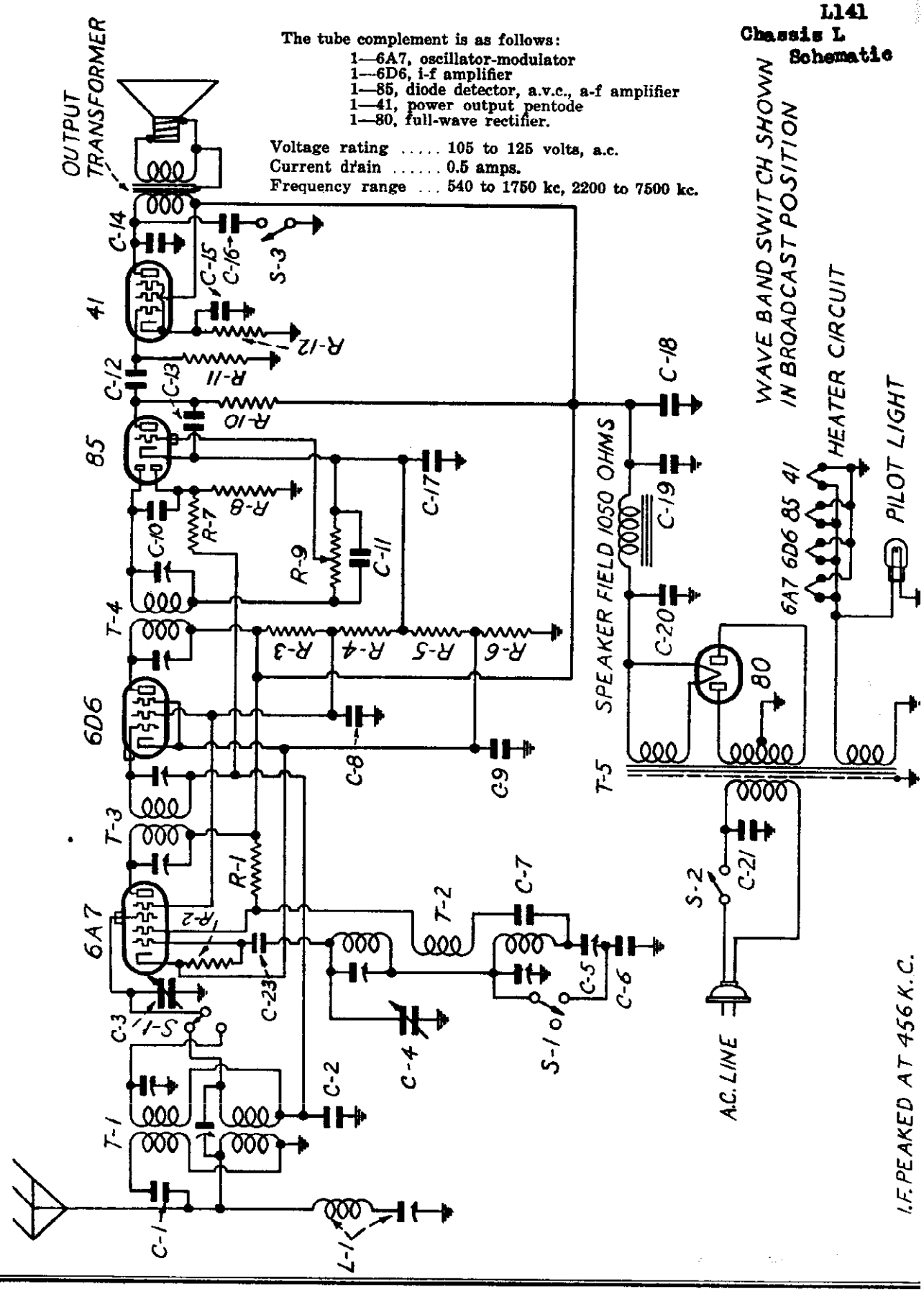

©John F. Rider, Publisher

Five-Tube, A.C., Dual-Wave Superheterodyne

MODELS L117, L122, L133, L135 and L141

Chassis Model L

GENERAL NOTES

1. The receiver should never be turned on with either the speaker plug or the 41 tube out of its respective socket, since the rapid rise in rectifier voltage will damage the electrolytic condenser.
2. When replacing the chassis in the cabinet take precautions to keep any part of the dial and condenser assembly from touching the cabinet, otherwise microphonism will result.
3. The color coding of the i-f transformers is as follows:

Grid—green	Grid return—black
B plus—red	Plate—blue

4. The color coding of the power transformer is as follows:

Primary—two black leads
High-voltage secondary—two red leads
High-voltage secondary center tap—red and yellow lead
6.3 volt secondary—two green leads
5 volt secondary—two yellow leads.

5. The adjustable padding condenser for the broadcast band is mounted underneath the chassis (in the corner near the wave-band switch) with the screw adjustment accessible through a hole in the top of the chassis. The short-wave band has a fixed padder which is a 1350 mmf molded mica condenser. (Note that this condenser is coded 1500 mmf.) When replacing this fixed padder be careful to use a condenser which has a capacity within 2% of 1350 mmf, otherwise the short-wave coils may not track.
6. With a few exceptions, the color coding of the general wiring is as follows:

Plate—blue	Cathode—white or yellow
B plus—red	Grid—green
Screen—brown	Fil. and ground—black.

ADJUSTMENTS

An oscillator with frequencies of 456, 600, 1600 and 6000 kc should be used.
An output meter should be used across the voice coil or output transformer for observing maximum response.
If the circuit is at all disturbed, both the broadcast and short-wave bands must be realigned.

Location of Coils and Trimmer Adjustments

The two i-f transformers are located on top of the chassis deck. The second i-f is the one directly behind the variable condenser. The four trimmers, two for each transformer, are accessible through holes in the tops of the cans.

The 456 kc wave trap is located on top of the chassis deck between the 6A7 tube and the first i-f transformer.

The adjustable padding condenser for the broadcast band is mounted underneath the chassis (in the corner near the 6A7 tube) with the screw adjustment accessible through a hole in the top of the chassis.

The antenna coils for the broadcast and short-wave bands are wound on one form and mounted underneath the chassis deck directly behind the adjustable padding condenser. The trimmers for these coils are also accessible through holes in the top of the chassis. The trimmer nearest the front of the chassis is the short-wave antenna trimmer. The trimmer farthest from the front of the chassis is the broadcast antenna trimmer.

The oscillator coils for the broadcast and short-wave bands are wound on one form and mounted underneath the chassis deck near the variable condenser. The trimmers for these coils are accessible through holes in the top of the chassis. The trimmer nearest the front of the chassis is for the short-wave oscillator coil and the trimmer farthest from the front is for the broadcast oscillator coil.

I-f and Wave-trap Alignment

Rotate the wave-band switch to the broadcast position, clockwise. Set the variable condenser at the minimum capacity position and feed 456 kc to the grid cap of the 6A7 tube. Adjust the four i-f trimmers for maximum response. Feed 456 kc to the antenna lead and adjust the wave-trap trimmer (mounted on wave-trap) for *minimum response*.

Short-wave Alignment (Alignment of the short-wave band should precede broadcast alignment)

Use a 400 ohm dummy antenna (a 400 ohm resistor in series with the test oscillator antenna lead) in aligning the short-wave coils. Rotate the wave-band switch to the short-wave position (counter-clockwise) and set the dial pointer exactly at 6 megacycles. Feed 6000 kc and adjust the short-wave oscillator trimmer (closest to front beside the variable condenser) for maximum response and then adjust the antenna trimmer (left side of top of chassis, closest to front). Be very careful to choose the minimum capacity peak on the oscillator trimmer. (See General Instructions below.)

Broadcast Alignment

Use a standard dummy antenna in aligning the broadcast coils. (A .0002 condenser may be used as a substitute.) Rotate the wave-band switch to the broadcast position, clockwise. Set the dial pointer at 600 and feed 600 kc. Adjust the broadcast series padder (in corner near 6A7 tube) for maximum response. Move the dial pointer to 1600 and feed 1600 kc. Adjust the broadcast oscillator trimmer (farthest from front beside the variable condenser) for maximum response and then adjust the broadcast antenna trimmer (farthest from front at left side of chassis). Return pointer to 600, feed 600 kc and readjust the broadcast series padder, rocking the variable condenser (rotate the variable condenser shaft back and forth through a small arc) for maximum response.

VOLTAGE ANALYSIS

Readings should be taken with a 1000 ohms-per-volt meter. Voltages listed below are from point indicated to ground (chassis). Line voltage for these readings was 117.5 volts, 60 cycles, a.c.

Tube	*Plate*	*Screen*	*Cathode*	*Osc. Plate*	*Fil.*
6A7	255	90	3.5	170	6.3 a.c.
6D6	255	90	3.5	—	6.3 a.c.
85	37	—	5.5	—	6.3 a.c.
41	240	255	15.0	—	6.3 a.c.

B plus at filament of 80 tube—325 volts
Voltage across speaker field—70 volts.

GENERAL INSTRUCTIONS

The set's oscillator is higher in frequency than the signal, so images should be observed on the low frequency side of the signals.

Always choose the minimum capacity peak on oscillator trimmers and maximum capacity peaks on antenna trimmers. The last motion in adjusting trimmers should always be a tightening one, not a loosening one.

Never leave a trimmer with the outside plate so loose that there is no tension on the screw. Either bend the plate up or remove the screw entirely.

Always use as weak a test signal as possible during alignment.

PRICES ARE SUBJECT TO CHANGE WITHOUT NOTICE

REPLACEMENT PARTS

*Item	Part No.	DESCRIPTION	List Price Effective as of Aug. 1st, 1936 PRICE
L1	MMT-149	456 kc adjustable wave trap	$ .50
T1	2NT-226	Two-band antenna coil	1.85
T2	2NT-227	Two-band oscillator coil	1.85
T3	2NT-230	456 kc first i-f transformer	1.85
T4	2NT-231	456 kc second i-f transformer	1.85
T5	2NT-233	Power transformer	4.05
R1	LR-60	20,000 ohm ½ watt carbon resistor	.15
R2	KR-53	50,000 ohm ½ watt carbon resistor	.15
R3	BR-12	25,000 ohm 1 watt carbon resistor	.15
R4	2NR-217	40,000 ohm 1 watt carbon resistor	.15
R5	FPR-128	500 ohm ½ watt wire-wound resistor	.15
R6	IIR-130	150 ohm ½ watt wire-wound resistor	.15
R7, R8	KR-57	1 megohm ½ watt carbon resistor	.15
R9, S2	2NR-214D	Volume control with line switch—250,000 ohms	1.20
R10	KR-54	100,000 ohm ½ watt carbon resistor	.15
R11	KR-56	500,000 ohm ½ watt carbon resistor	.15
R12	CCR-113	450 ohm 1 watt wire-wound resistor	.15
C1, C23	AAC-106A	0.00005 mf mica condenser	.20
C2, C8	BC-12	0.05 mf, 200 volt tubular condenser	.20
C3, C4	3EC-284	Two gang variable condenser	2.85
C5	2NC-231	Single adjustable padding condenser Range—300 to 600 mmf	.50
C6	2NC-230	0.00135 mf mica condenser	.20
C7	KC-58	0.01 mf, 400 volt tubular condenser	.20
C9	BC-13	0.25 mf, 200 volt tubular condenser	.20
C10, C11	AC-7A	0.00025 mf mica condenser	.20
C12	LC-65	0.02 mf, 400 volt tubular condenser	.20
C13	IC-47	0.0005 mf mica condenser	.20
C14	ZC-115	0.006 mf, 1000 volt tubular condenser	.20
C15	IC-42A	Tubular 5 mf, 25 volt dry electrolytic condenser	.90
C16	2TC-189	0.015 mf, 1000 volt tubular condenser	.20
C17	AC-6	0.1 mf, 200 volt tubular condenser	.20
C18	EBC-122	0.1 mf, 400 volt tubular condenser	.20
C19	2NC-247	16 mf, 405 volt wet electrolytic condenser (regulating type)	1.20
C20	2NC-246	16 mf, 450 volt wet electrolytic condenser	1.20
C21	3LC-227	0.01 mf, 250 volt a-c condenser in tubular metal container	.30
	2NS-122	5½" dynamic speaker (Models L117, L122, L141)	5.80
	3LS-199	10" dynamic speaker (Model L135)	8.25
S1	TTS-111K	Wave-band switch	.60
S3	2TS-145E	Tone control switch	.35
	XL-9	Pilot light, 6.3 volt, .25 amp., Mazda No. 46	.20
	2NZ-364	Dial face	.75
	3CZ-336A	Dial drive belt	.10
	3CZ-337	Dial drive shaft and pulley	.10
	3CZ-339	Idler pulley	.05
	3CZ-340	Idler pulley spring	.05
	3CZ-341	Condenser shaft pulley	.10
	2FZ-358	Dial pointer	.10
	3CZ-350	Escutcheon with crystal	1.05

*Item number locates the article on the schematic diagram.

EMERSON RADIO & PHONO. CORP.

MODEL 119 (Revised)
Chassis U6A
Schematic, Voltage Alignment

ADJUSTMENTS

An oscillator with frequencies of 455, 600, 1600, 1700, 4500 and 15,000 kc should be used. In addition, an output meter should be used across the voice coil or output transformer for observing maximum response.

I-f Alignment

The i-f transformers 2ZT-194 and 2ZT-195 are located on the top of the chassis. The four trimmers, two for each i-f transformer, are located at the tops of the cans. Set the wave-band switch to broadcast (extreme clockwise position) and rotate variable condenser to minimum. Feed 456 kc to grid of the 6A8 tube and adjust the four i-f trimmers for maximum response. Then feed 456 kc through the antenna and adjust the wave-trap trimmer for *minimum response*. The trimmer is on the wave-trap, which is located on top of the chassis behind the speaker.

Location of Coils

The antenna coils for the three bands are wound on one form and mounted on top of the chassis. The three trimmers for these coils are mounted on a bakelite strip above the tubing. The trimmer farthest from the end of chassis is for the short-wave antenna coil. The central trimmer is for the police antenna coil and the trimmer nearest the end of chassis is for the broadcast antenna coil.

The oscillator coils for the three bands are wound on one form and mounted underneath the chassis deck on the right-hand wall with the trimmers facing out. The trimmer screws are available through three holes in the chassis wall. The trimmer closest to front is for the broadcast oscillator coil, the central trimmer is for the police oscillator coil and the trimmer furthest from front is for the short-wave oscillator coil.

The adjusting screws for the dual padder are also available at the right-hand chassis wall. The screw closer to the front is for the broadcast band and the other is for the police band. The short-wave band has no adjustable padder.

Broadcast Alignment

Set the wave-band switch to broadcast position (extreme clockwise) and dial pointer to 600. Feed 600 kc through antenna lead and adjust broadcast padder (lower row on right wall, closest to front) for maximum response. Set pointer to 1600, feed 1600 kc and adjust the broadcast oscillator trimmer (top row on right wall, closest to front) for maximum response, and then the broadcast antenna trimmer (on antenna coil, nearest the end of chassis). Return pointer to 600 and rock the variable condenser (rotate condenser back and forth through small arc) while adjusting the broadcast padder for maximum response. If a readjustment is necessary return to 1600 and realign the antenna and oscillator trimmers.

Police Alignment

Set the wave-band switch to police (central position), pointer to 1700 and feed 1700 kc through antenna lead. Adjust police band padder (furthest from front on right wall, lower row) for maximum response. Set pointer to 4500 and feed 4500 kc. Adjust police band oscillator trimmer (central trimmer on right wall, upper row) for maximum response. If two peaks are heard, select the one of minimum capacity (see General Instructions below), then adjust police band antenna trimmer (central one on top) for maximum response, selecting the peak of maximum capacity. Again feed 1700 kc, with pointer at 1700, rock variable condenser and adjust police band padder for maximum response. Realign at 4500 if necessary.

Short-Wave Alignment

Set wave-band switch to counter-clockwise (short-wave) position and pointer at 15 megacycles. Feed 15,000 kc through antenna. Adjust short-wave oscillator trimmer (furthest from front on right wall, top row) for maximum response. If two peaks are obtained, select the one of minimum capacity.

Check all three bands for dead spots or incorrect image responses.

General Instructions

The set's oscillator is higher in frequency than the signal on all three bands. Images, therefore, should be observed on the low-frequency side of the signals.

Always choose the minimum capacity peak on oscillator trimmers and maximum capacity peaks on the antenna trimmers. The last motion in adjusting trimmers should always be a tightening one.

Never leave a trimmer with the outside plate so loose that there is no tension on the screw. Either bend the plate up or remove the screw entirely. Loose screws are a source of noise, frequency drift and microphonism.

In aligning antenna trimmers on the high-frequency signals there is usually a tendency for the oscillator to drift, due to interlocking. To compensate for this, always keep re-tuning the variable condenser.

1. If replacements are made or the wiring disturbed in the r-f section of the circuit, the receiver should be carefully realigned.
2. Bias for the grid of the audio section of the 75 tube is obtained by means of a very small one-volt battery (bias cell). The cell assembly is mounted on a bakelite strip in the front corner of the chassis near the volume control. Do not put a voltmeter across this bias cell. If the set distorts, check it by temporarily replacing with a new cell, or some other one-volt source, and noting results. To remove the bias cell, simply pull up on the spring clip and lift the cell from its cup.
4. The filament dropping resistor, (115-ohm schematic), is a resistance wire in the special line cord. The cord will, therefore, become warm under normal operating conditions. To insure good heat radiation stretch out the line cord to its full length. Do not attempt to shorten it by cutting.

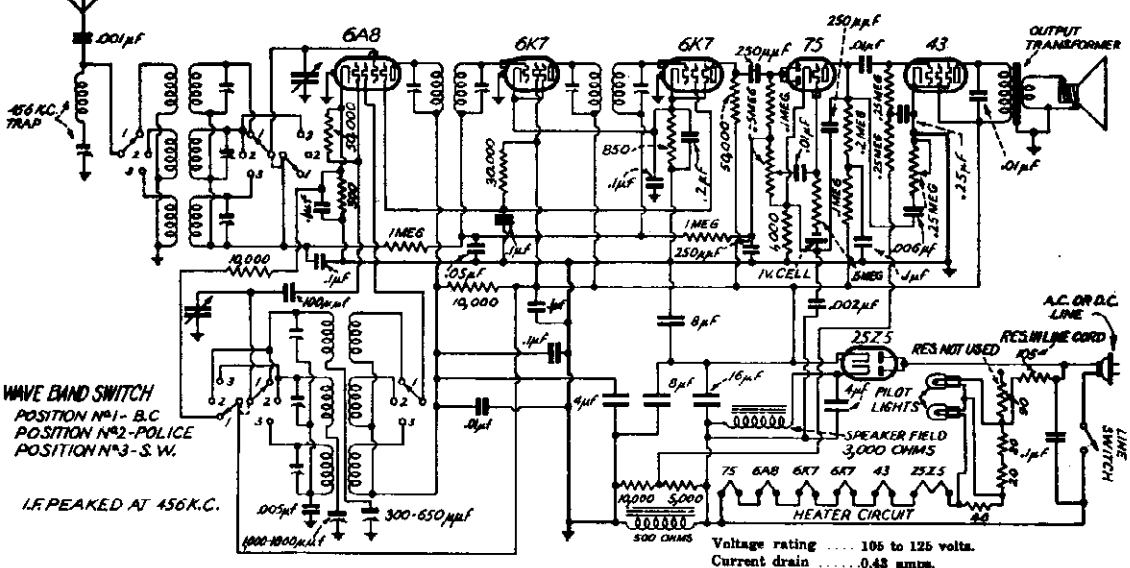

Voltage rating ..... 105 to 125 volts.
Current drain ..... 0.43 amps.
Frequency ranges .. 540-1660 kc, 1580-4750 kc, 5.5—16 mc.

VOLTAGE ANALYSIS

Readings should be taken with a 1000 ohms-per-volt meter. Voltages listed below are from point indicated to B minus (cathode of 43 tube). Line voltage for these readings was 117.5 volts, a.c., 60 cycles.

Tube	*Plate*	*Screen*	*Cathode*	*Osc. Plate*	*Fil.*
6A8	78	50	*7	78	6
6K7 1st i-f	107	107	4.7	—	6
6K7 2nd i-f	70	50	5	—	6
75	45	—	0.2	—	6
43	95	107	0	—	24

Voltage across speaker field (25Z5 cathode to line switch) — 107 volts.

Voltage across choke (43 cathode to line switch) — 22 volts.

*Voltage indicated is with wave-band switch in broadcast position. On the police and short-wave bands this voltage is 2.8 volts.

The tube complement is as follows:

1—6A8 (metal) Pentagrid oscillator-modulator.
1—6K7 (metal) 1st i-f amplifier.
1—6K7 (metal) 2nd i-f amplifier (adjacent to 75).
1—75 (glass) 2nd detector—a-f amplifier—a.v.c.
1—43 (glass) Power output pentode.
1—25Z5 (glass) Half-wave rectifier.

©John F. Rider, Publisher

MODEL E128
Chassis E
Schematic, Voltage Alignment

EMERSON RADIO & PHONO. CORP.

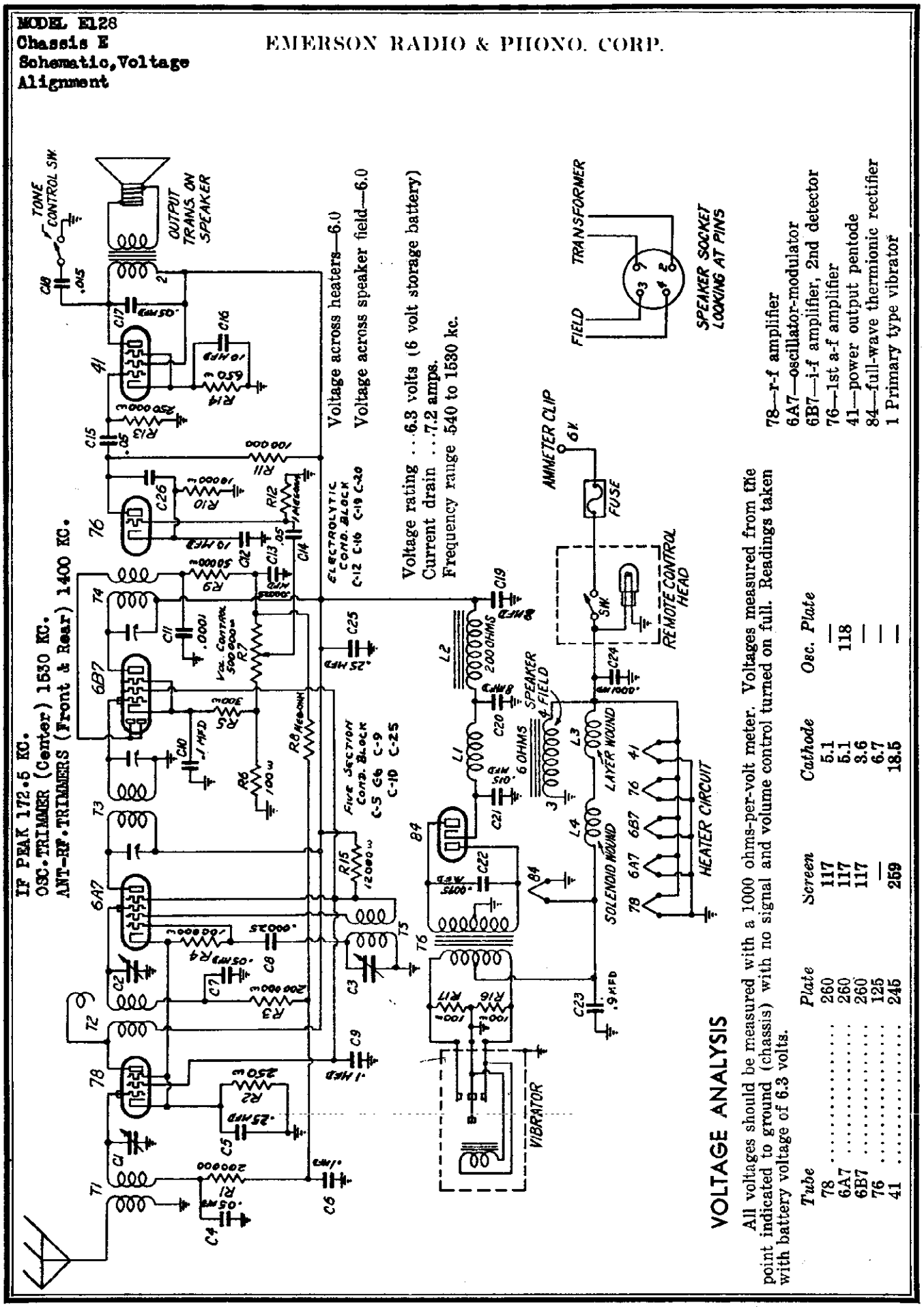

VOLTAGE ANALYSIS

All voltages should be measured with a 1000 ohms-per-volt meter. Voltages measured from the point indicated to ground (chassis) with no signal and volume control turned on full. Readings taken with battery voltage of 6.3 volts.

Tube	*Plate*	*Screen*	*Cathode*	*Osc. Plate*
78	260	117	5.1	—
6A7	260	117	5.1	118
6B7	260	117	3.6	—
76	125	—	6.7	—
41	245	259	18.5	—

78—r-f amplifier
6A7—oscillator-modulator
6B7—i-f amplifier, 2nd detector
76—1st a-f amplifier
41—power output pentode
84—full-wave thermionic rectifier
1 Primary type vibrator

©John F. Rider Publisher

EMERSON RADIO & PHONO. CORP.

MODEL 119 (Revised)
Chassis U6A
Schematic, Voltage Alignment

ADJUSTMENTS

An oscillator with frequencies of 456, 600, 1600, 1700, 4500 and 15,000 kc should be used. In addition, an output meter should be used across the voice coil or output transformer for observing maximum response.

I-F Alignment

The i-f transformers ZZT-194 and ZZT-195 are located on the top of the chassis. The four trimmers, two for each i-f transformer, are located at the tops of the cans. Set the wave-band switch to broadcast (extreme clockwise position) and rotate variable condenser to minimum. Feed 456 kc to grid of the 6A8 tube and adjust the four i-f trimmers for maximum response. Then feed 456 kc through the antenna and adjust the wave-trap trimmer for *minimum response*. The trimmer is on the wave-trap, which is located on top of the chassis behind the speaker.

Location of Coils

The antenna coils for the three bands are wound on one form and mounted on top of the chassis. The three trimmers for these coils are mounted on a bakelite strip above the tubing. The trimmer furthest from the end of chassis is for the short-wave antenna coil. The central trimmer is for the police antenna coil and the trimmer nearest the end of chassis is for the broadcast antenna coil.

The oscillator coils for the three bands are wound on one form and mounted underneath the chassis deck on the right-hand wall with the trimmers facing out. The trimmer screws are available through three holes in the chassis wall. The trimmer closest to front is for the broadcast oscillator coil, the central trimmer is for the police oscillator coil and the trimmer furthest from front is for the short-wave oscillator coil.

The adjusting screws for the dual padder are also available at the right-hand chassis wall. The screw closer to the front is for the broadcast band and the other is for the police band. The short-wave band has no adjustable padder.

Broadcast Alignment

Set the wave-band switch to broadcast position (extreme clockwise) and dial pointer to 600. Feed 600 kc through antenna lead and adjust broadcast padder (lower row on right wall, closest to front) for maximum response. Set pointer to 1600, feed 1600 kc and adjust the broadcast oscillator trimmer (top row on right wall, closest to front) for maximum response, and then the broadcast antenna trimmer (on antenna coil, nearest the end of chassis). Return pointer to 600 and rock the variable condenser (rotate condenser back and forth through small arc) while adjusting the broadcast padder for maximum response. If a readjustment is necessary return to 1600 and realign the antenna and oscillator trimmers.

Police Alignment

Set the wave-band switch to police (central position), pointer to 1700 and feed 1700 kc through antenna lead. Adjust police band padder (further from front on right wall, lower row) for maximum response. Set pointer to 4500 and feed 4500 kc. Adjust police band oscillator trimmer (central trimmer on right wall, upper row) for maximum response. If two peaks are heard, select the one of minimum capacity (rear one on right wall, upper row). Then adjust police band antenna trimmer (central one on top) for maximum response, selecting the peak of maximum capacity. Again feed 1700 kc, with pointer at 1700, rock variable condenser and adjust police band padder for maximum response. Realign at 4500 if necessary.

Short-Wave Alignment

Set wave-band switch to counter-clockwise (short-wave) position and pointer at 15 megacycles. Feed 15,000 kc through antenna. Adjust short-wave oscillator trimmer (furthest from front on right wall, top row) for maximum response. If two peaks are obtained, select the one of minimum capacity.

Check all three bands for dead spots or incorrect image responses.

General Instructions

The set's oscillator is higher in frequency than the signal on all three bands. Images, therefore, should be observed on the low-frequency side of the signals.

Always choose the minimum capacity peak on oscillator trimmers and maximum capacity peaks on the antenna trimmers. The last motion in adjusting trimmers should always be a tightening one.

Never leave a trimmer with the outside plate so loose that there is no tension on the screw. Either bend the plate up or remove the screw entirely. Loose screws are a source of noise, frequency drift and microphonism.

In aligning antenna trimmers on the high-frequency signals there is usually a tendency for the oscillator to drift, due to interlocking. To compensate for this, always keep re-tuning the variable condenser.

1. If replacements are made or the wiring disturbed in the r-f section of the circuit, the receiver should be carefully realigned.
2. Bias for the grid of the audio section of the 75 tube is obtained by means of a very small one-volt battery (bias cell). The cell assembly is mounted on a bakelite strip in the front corner of the chassis near the volume control. Do not put a voltmeter across this bias cell. If the set distorts, check it by temporarily replacing with a new cell, or some other one-volt source, and noting results. To remove the bias cell, simply pull up on the spring clip and lift the cell from its cup.
4. The filament dropping resistor, (105-ohm schematic), is a resistance wire in the special line cord. The cord will, therefore, become warm under normal operating conditions. To insure good heat radiation stretch out the line cord to its full length. Do not attempt to shorten it by cutting.

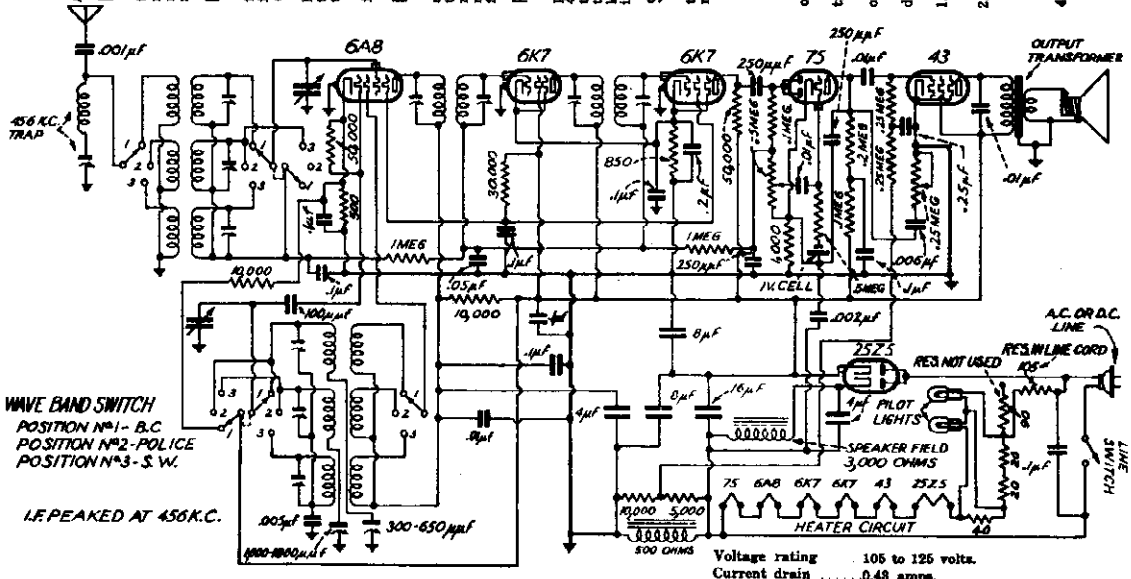

Voltage rating ..... 105 to 125 volts.
Current drain ..... 0.43 amps.
Frequency ranges ..... 540-1660 kc, 1580-4750 kc, 5.5—16 mc.

VOLTAGE ANALYSIS

Readings should be taken with a 1000 ohms-per-volt meter. Voltages listed below are from point indicated to B minus (cathode of 43 tube). Line voltage for these readings was 117.5 volts, a.c., 60 cycles.

Tube	Plate	Screen	Cathode	Osc. Plate	Fil.
6A8	78	50	*7	78	6
6K7 1st i-f	107	107	4.7	—	6
6K7 2nd i-f	70	50	5	—	6
75	45	—	0.2	—	6
43	95	107	0	—	24

Voltage across speaker field (25Z5 cathode to line switch) — 107 volts.

Voltage across choke (43 cathode to line switch) — 22 volts.

***Voltage indicated is with wave-band switch in broadcast position. On the police and short-wave bands this voltage is 2.3 volts.**

The tube complement is as follows:

1—6A8 (metal) Pentagrid oscillator-modulator.
1—6K7 (metal) 1st i-f amplifier.
1—6K7 (metal) 2nd i-f amplifier (adjacent to 75).
1—75 (glass) 2nd detector—a-f amplifier—a.v.c.
1—43 (glass) Power output pentode.
1—25Z5 (glass) Half-wave rectifier.

©John F. Rider, Publisher

MODEL E128
Chassis E
Schematic, Voltage Alignment

EMERSON RADIO & PHONO. CORP.

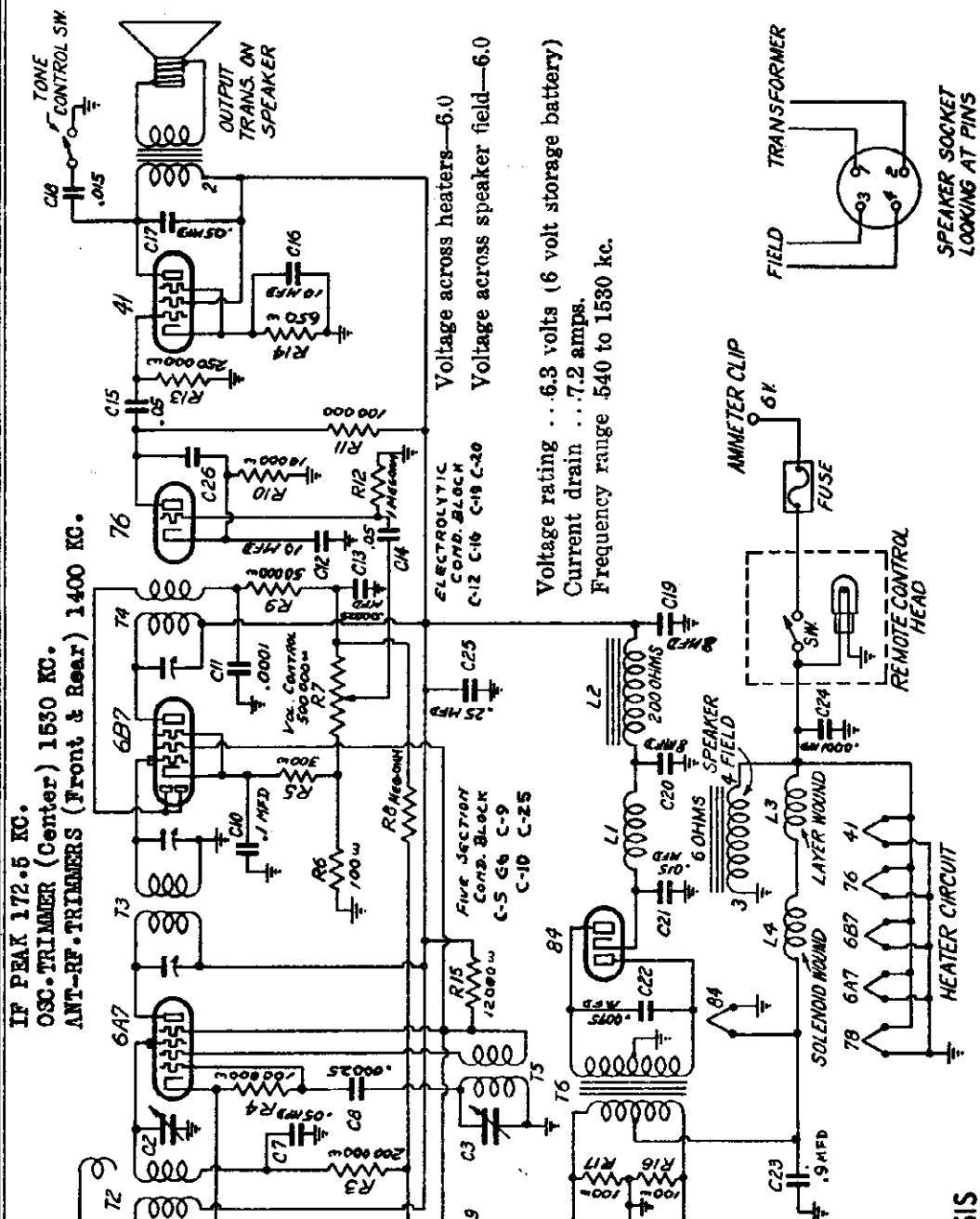

VOLTAGE ANALYSIS

All voltages should be measured with a 1000 ohms-per-volt meter. Voltages measured from the point indicated to ground (chassis) with no signal and volume control turned on full. Readings taken with battery voltage of 6.3 volts.

Tube	*Plate*	*Screen*	*Cathode*	*Osc. Plate*
78	260	117	5.1	—
6A7	260	117	5.1	118
6B7	260	117	3.6	—
76	125	—	6.7	—
41	245	259	18.5	—

78—r-f amplifier
6A7—oscillator-modulator
6B7—i-f amplifier, 2nd detector
76—1st a-f amplifier
41—power output pentode
84—full-wave thermionic rectifier
1 Primary type vibrator

©John F. Rider, Publisher

EMERSON RADIO & PHONO. CORP.

MODELS A130, A132
Chassis A
Three Types
Schematics

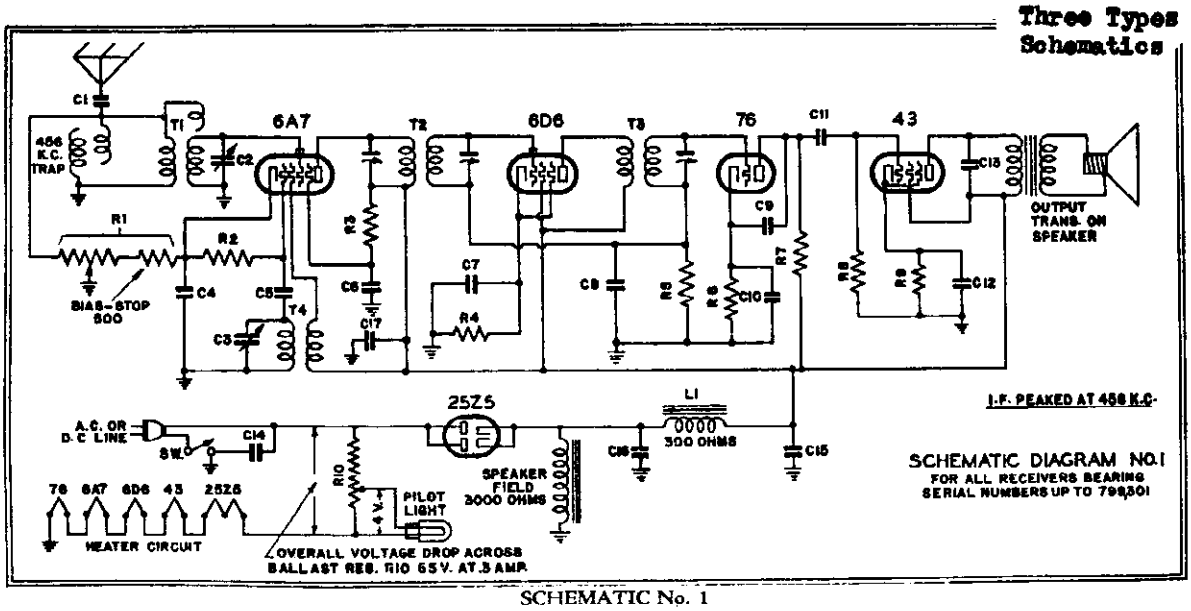

SCHEMATIC No. 1

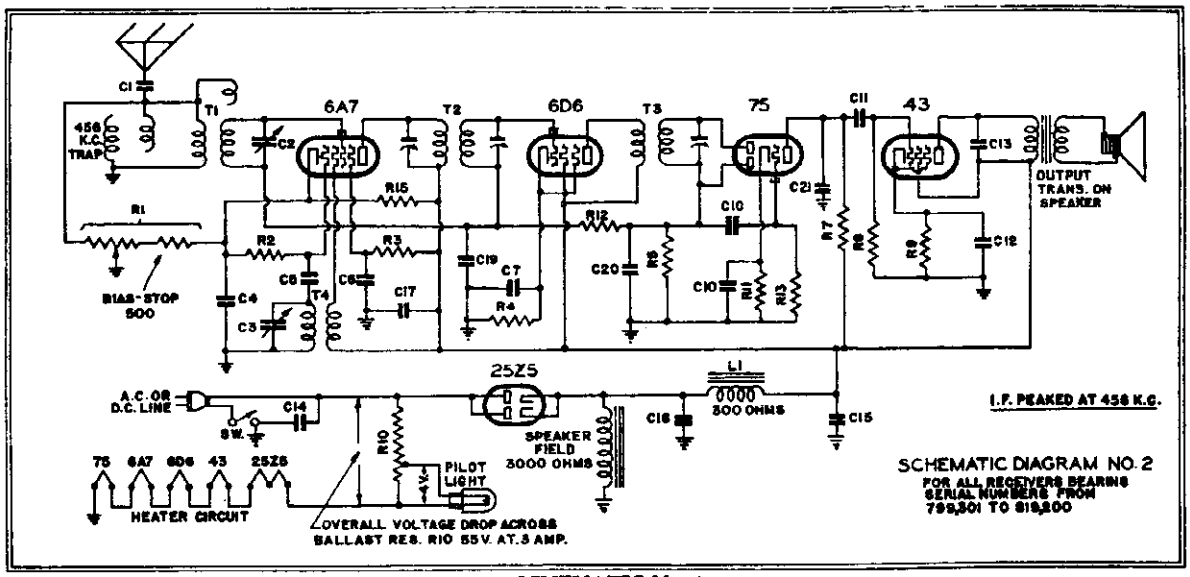

SCHEMATIC No. 2

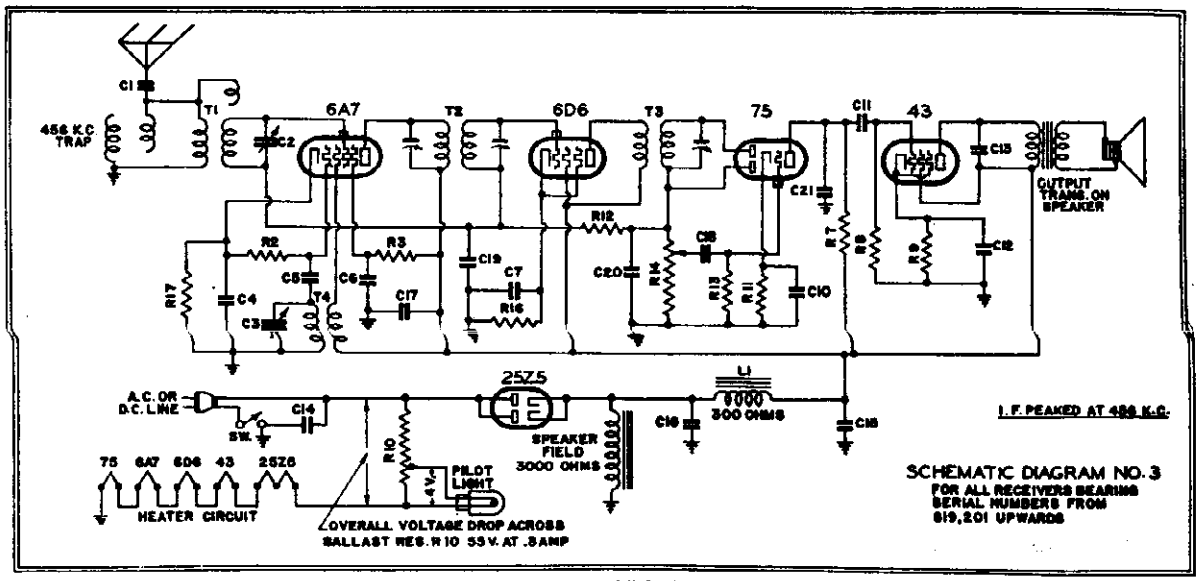

SCHEMATIC No. 3

GENERAL NOTES

1. If replacements are made or the wiring disturbed in the r-f section of the circuit, the receiver should be carefully re-aligned.
2. One side of the power line is directly grounded to the chassis base. Under no circumstances, therefore, should a ground wire be permitted to come in contact with any metal part of the receiver.
3. The filament dropping resistor (R10—see schematic) is in a special metal tube at back of the chassis. This tube will, therefore, become quite hot under normal operating conditions. For voltage drop see below.
4. When operating the receiver on d.c. it may be necessary to reverse the line plug for correct polarity.
5. The first i-f transformer (one directly behind variable condenser) is of the plug-in type. To remove, unsolder all leads under the chassis, pinch together the prongs of the plug-in fastener and lift out.
6. The color coding of the i-f transformer leads is as follows:

Grid—green	Plate—blue
Grid return—black	B plus—red

Tube Data

The tube complement, for sets bearing serial numbers above 799801, is as follows:

1—6A7 pentagrid oscillator-modulator.
1—6D6 first i-f amplifier.
1—75 diode detector, audio amplifier, automatic volume control.
1—43 pentode power output.
1—25Z5 dual half-wave rectifier.

On sets bearing serial numbers below 799801, the 75 tube is replaced with a 76 tube, which functions only as a second detector.

VOLTAGE ANALYSIS

Readings should be taken with a 1000 ohms-per-volt meter. Voltages listed below are from point indicated to ground (chassis) with the volume control turned on full and no signal. Line voltage for these readings was 117.5 volts, 60 cycles, a.c.

The voltage analysis on sets bearing serial numbers above 799,801 is as follows:

Tube	*Plate*	*Screen*	*Osc. Plate*	*Cathode*	*Fil.*
6A7	112	50	112	1.5	6 a.c.
6D6	112	112	—	4.6	6 a.c.
75	40	—	—	0.5	6 a.c.
43	100	112	—	15.0	25 a.c.

The voltage analysis on sets bearing serial numbers below 799,801 is as follows:

Tube	*Plate*	*Screen*	*Osc. Plate*	*Cathode*	*Fil.*
6A7	112	50	112	2.5	6 a.c.
6D6	112	112	—	5.5	6 a.c.
76	50	—	—	6.0	6 a.c.
43	100	112	—	15.0	25 a.c.

Voltage across speaker field, (25Z5 cathode to ground)—125 volts.
Voltage across filter choke, (25Z5 cathode to B plus)—12 volts.
Voltage drop across ballast tube, (See R10, schematic)—45 volts, a.c.
Voltage drop across the pilot light section of ballast tube—4 volts, a.c.

ADJUSTMENTS

An oscillator with frequencies of 456 kc and 1500 kc should be used.

An output meter should be used across the voice coil or output transformer for observing maximum response.

Location of I-f Transformers and Trimmers

The first i-f transformer, part number 3CT-274, is in an oblong coil can located on the top of the chassis directly behind the variable condenser. The two trimmers for this i-f are accessible through holes in the top of the coil can.

The second i-f transformer, part number UUT-181 is in a round coil can located on top of the chassis to the right of the speaker. The single trimmer for this i-f is accessible through a hole in the top of the coil can.

The oscillator and antenna trimmers are located on the top of the variable condenser. The oscillator trimmer is on the rear section of the variable condenser and the antenna trimmer is on the front section of the variable condenser.

Alignment Procedure

1. Rotate the variable condenser to the minimum capacity position.
2. Feed 456 kc to the grid cap of the 6A7 tube.
3. Adjust the three i-f trimmers, repeating for maximum response.
4. Set the dial pointer to 1500 and feed 1500 kc to the antenna lead through a standard broadcast dummy antenna. (A .0002 mf mica condenser may be used as a substitute).
5. Adjust the oscillator trimmer (on rear section of variable condenser) for maximum response.
6. Adjust the antenna trimmer (on front section of variable condenser) for maximum response.

Range The receiver is designed to operate over a frequency range from 540 to 1700 kilocycles. This range covers all of the standard broadcast stations and includes police calls above 1600 kilocycles.

Voltage rating	105-125 volts, a.c. or d.c.
Current drain	0.4 amp.
Frequency range	540 to 1700 kc.

REPLACEMENT PARTS

* ITEM Schematic No. 1	* ITEM Schematic No. 2	* ITEM Schematic No. 3	PART No.	DESCRIPTION	PRICE
L1	L1	L1	3CT-276	Filter choke	$ .60
T1	T1	T1	3FT-280	Antenna coil with 456 kc. wave trap	.75
T2	T2	T2	3CT-274	456 kc first i-f transformer	1.00
T3	T3	T3	UUT-181	456 kc second i-f transformer	1.00
T4	T4	T4	3FT-281	Oscillator coil	.35
R1	R1	—	TTR-159E	Volume control with line switch—5000 ohms with 500 ohm bias stop	.80
R2	R2	R2	KR-53	50,000 ohm ½ watt carbon resistor	.15
R3	R3	R3	ZZR-196	30,000 ohm ¼ watt carbon resistor	.15
R4	R4	—	ZZR-197	850 ohm ½ watt wire-wound resistor	.15
R5	—	—	KR-56	500,000 ohm ¼ watt carbon resistor	.15
R6	—	—	LLR-154	75,000 ohm ¼ watt carbon resistor	.15
R7	R7	R7	KR-55	250,000 ohm ¼ watt carbon resistor	.15
R8	R8	R8	KR-56	500,000 ohm ¼ watt carbon resistor	.15
R9	R9	R9	KKR-135	650 ohm ½ watt wire-wound resistor	.15
R10	R10	R10	2UR-224	Plug-in type ballast resistor	.55
—	R11	R11	LR-64	5,000 ohm ½ watt carbon resistor	.15
—	R12	R12	NNR-220	3 megohm ¼ watt carbon resistor	.15
—	R13	R13	NNR-220	3 megohm ¼ watt carbon resistor	.15
—	—	R14	3FR-256	Volume control with line switch—500,000 ohms	.70
—	R15	—	LLR-154	75,000 ohm ¼ watt carbon resistor	.15
—	—	R16	FFR-126	500 ohm ½ watt wire-wound resistor	.15
—	—	R17	AAR-119	300 ohm ½ watt wire-wound resistor	.15
C1	C1	C1	AAC-114	0.001 mf mica condenser	.15
C2, C3	C2, C3	C2, C3	3FC-269	Two-gang variable condenser	1.95
C4	C4	C4	FC-29	0.02 mf 200 volt tubular condenser	.15
C5	C5	C5	NC-70A	0.0002 mf mica condenser	.15
C6	C6	C6	AC-6	0.1 mf 200 volt tubular condenser	.15
C7	C7	C7	FC-29	0.02 mf 200 volt tubular condenser	.15
C8	—	—	AC-6	0.1 mf 200 volt tubular condenser	.15
C9	—	—	AAC-114	0.001 mf mica condenser	.15
C10, C12	C10, C12	C10, C12	KKC-145	Dual 5 mf, 25 volt electrolytic condenser	.90
C11	C11	C11	KC-58	0.01 mf 400 volt tubular condenser	.15
C13	C13	C13	HC-34	0.006 mf 600 volt tubular condenser	.15
C14	C14	C14	2VC-242	.1 mf 250 volt a.c. tubular condenser	.15
C15, C16	C15, C16	C15, C16	3CC-261	20 mf 150 volt electrolytic condenser	.80
C17	C17	C17	AC-6	.1 mf 200 volt tubular condenser	.15
—	C18	C18	CCC-127	.01 mf 200 volt tubular condenser	.15
—	C19	C19	AC-6	.1 mf 200 volt tubular condenser	.15
—	C20	C20	NC-70A	0.0002 mf mica condenser	.15
—	C21	C21	NC-70A	0.0002 mf mica condenser	.15
			3FS-179	6" dynamic speaker	3.25
			XL-9	Pilot light, 6.3 volt, .25 amp., Mazda No. 48	.15
			3FZ-352	Dial face	.10
			3CZ-336	Dial drive belt	.10
			3CZ-337	Dial drive shaft and pulley	.05
			3CZ-339	Dial idler pulley	.05
			3CZ-341	Condenser shaft pulley	.10
			3CZ-340	Dial idler pulley spring	.02
			3FZ-353	Dial pointer	.05
			3FZ-351	Escutcheon with crystal. (For model A-130)	.70
			3FZ-398	Dial crystal. (For model A-132)	.35
			3PZ-399	Clip for dial crystal. (Model A-132)	.01

When Ordering Replacement Parts Specify Part Numbers

* Item number locates the article on the schematic diagram. PRICES ARE SUBJECT TO CHANGE WITHOUT NOTICE

PRODUCTION CHANGES

Schematic no. 1 applies to all receivers bearing serial numbers up to 799,801.

Schematic no. 2 applies to all receivers bearing serial numbers from 799,801 to 819,200.

Schematic no. 3 applies to all receivers bearing serial numbers above 819,200.

©John F. Rider, Publisher

EMERSON RADIO & PHONO. CORP.

MODEL B131
Chassis B
Schematic

The tube complement is as follows:
1-6A7, pentagrid oscillator-modulator
1-6D6, first i-f amplifier
1-75, diode detector, a-f amplifier, automatic volume control
1-43, pentode power output
1, 25Z5 dual half-wave rectifier.

Voltage rating .....105 to 125 volts, a.c. or d. c.
Current drain .....0.42 amps
Frequency ranges .....540 to 1625 kc, 5.6 to 18.0 megacycles.

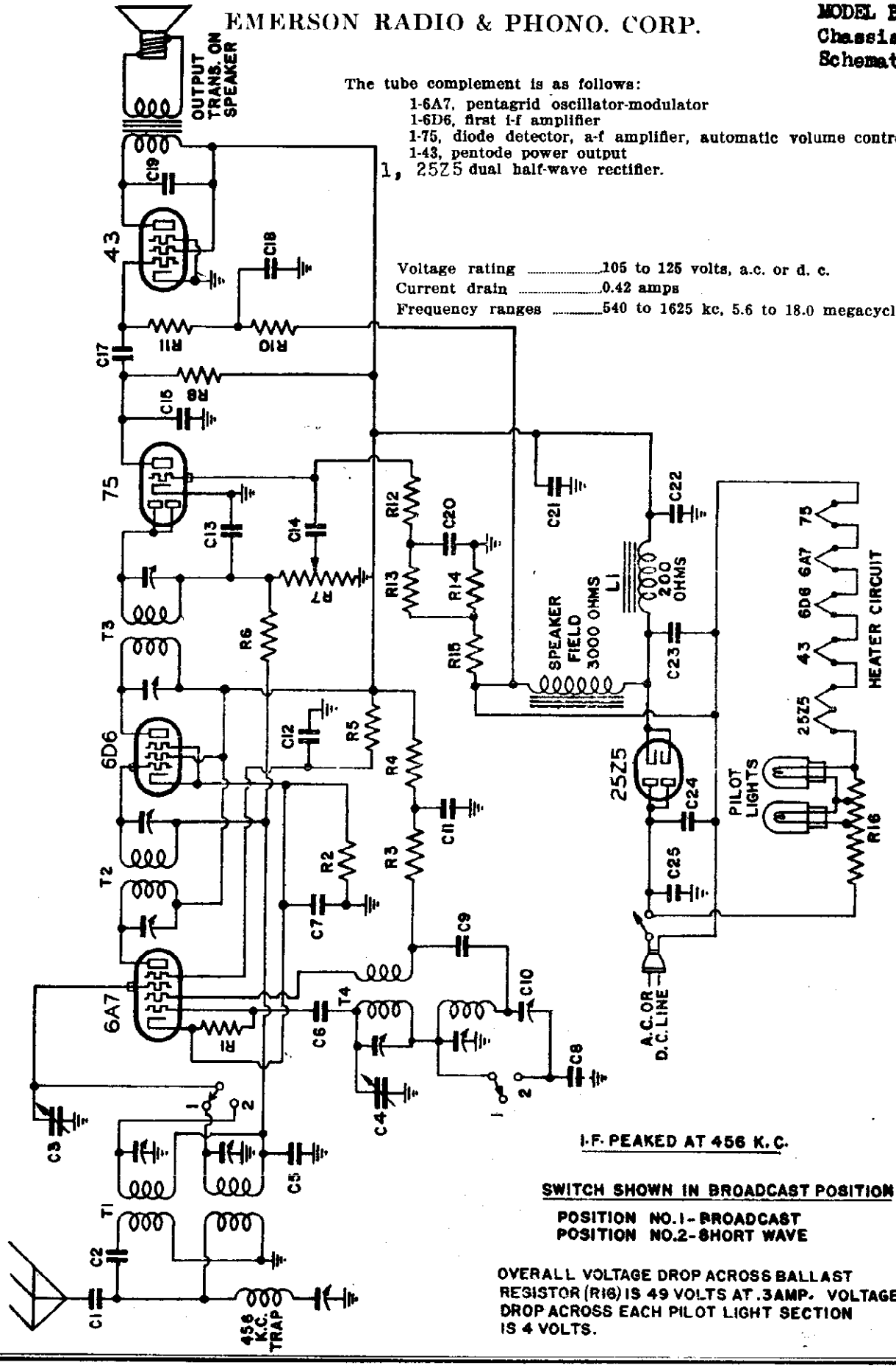

I-F PEAKED AT 456 K.C.

SWITCH SHOWN IN BROADCAST POSITION

POSITION NO.1 - BROADCAST
POSITION NO.2 - SHORT WAVE

OVERALL VOLTAGE DROP ACROSS BALLAST RESISTOR (R16) IS 49 VOLTS AT .3AMP. VOLTAGE DROP ACROSS EACH PILOT LIGHT SECTION IS 4 VOLTS.

©John F. Rider, Publisher

©John F. Rider, Publisher

A.C.-D.C. Dual-Wave Superheterodyne

SIX TUBES, INCLUDING BALLAST TUBE

ADJUSTMENTS

An oscillator with frequencies of 456, 600, 1425 and 15,000 kc should be used.

In addition an output meter should be used across the voice coil or output transformer for observing maximum response.

Location of Coils and Trimmer Adjustments

The broadcast antenna coil, the short-wave antenna coil and the 456 kc wave trap are one assembly mounted underneath the chassis deck to the right of the variable condenser. The trimmers for these coils are accessible through three holes in the top of the chassis. The trimmer closest to the front of the chassis is for the short-wave antenna coil. The central trimmer is for the broadcast antenna coil and the trimmer farthest from the chassis front is for the 456 kc wave trap.

The broadcast oscillator and short-wave oscillator coils are wound on one tubing and mounted on the inside of the rear chassis wall. The trimmers for these coils are accessible through two holes in the rear chassis wall. The left-hand trimmer (looking at the rear wall) is for the short-wave oscillator coil and the right-hand trimmer is for the broadcast oscillator coil.

The two i-f transformers are in oblong coil cans located on the top of the chassis. The first i-f transformer is the one behind the variable condenser. The trimmers for these transformers are accessible through holes in the tops of the cans.

The broadcast series padding condenser is located on the rear wall of the chassis below the 6A7 tube.

I-f Transformer and Wave-Trap Alignment

Turn the switch clockwise to the broadcast position and rotate the variable condenser to the minimum capacity position. Feed 456 kc to the grid cap of the 6A7 tube and adjust the four i-f trimmers for maximum response. Feed 456 kc to the antenna and adjust the wave-trap trimmer (rear screw beside variable condenser) for minimum response.

Short-Wave Alignment

Use a dummy antenna (400 ohm resistor) when aligning the short-wave coils.

Rotate the wave-band switch counter-clockwise to the short-wave position and set the dial pointer to 15 megacycles. Feed 15 megacycles through the dummy antenna and adjust the short-wave oscillator trimmer (left-hand screw on rear chassis wall) for maximum response and then adjust the short-wave antenna trimmer (front screw beside variable condenser) for maximum response. The variable condenser should be rocked while adjusting the antenna trimmer. (Rotate variable condenser rotor shaft back and forth through a small arc).

Broadcast Alignment

Rotate the wave-band switch to the broadcast position, clockwise, and set the dial pointer at 60. Feed 600 kc through a standard dummy antenna (a .0002 mf condenser may be used as a substitute).

Adjust the broadcast series padding condenser (on rear chassis wall, below 6A7 tube) for maximum response. Move pointer to 142.5, feed 1425 kc and adjust the broadcast oscillator trimmer (right-hand screw on rear chassis wall) for maximum response and then adjust the broadcast antenna trimmer (central screw beside variable condenser) for maximum response. Return pointer to 60, feed 600 kc and readjust the series padding condenser rocking the variable condenser for maximum response.

GENERAL INSTRUCTIONS

The set's oscillator is higher in frequency than the signal, so images should be observed on the low frequency side of the signals.

Always choose the minimum capacity peak on oscillator trimmers and maximum capacity peaks on antenna trimmers. The last motion in adjusting trimmers should always be a tightening one, not a loosening one.

Always use as weak a test signal as possible during alignment.

Never leave a trimmer with the outside plate so loose that there is no tension on the screw. Either bend the plate up or remove the screw entirely.

GENERAL NOTES

1. If replacements are made or the wiring disturbed in the r-f portion of the circuit, the receiver should be carefully re-aligned.
2. One side of the power line is directly grounded to the chassis base. Under no circumstances, therefore, should a ground wire be permitted to come in contact with any metal part of the receiver.
3. The filament dropping resistor (R16 on schematic) is in a special metal tube at the rear of the chassis. This tube will become quite hot under normal operating conditions. For voltage drop specifications, see below.
4. When operating the receiver on d.c. it may be necessary to reverse the line plug to obtain the correct polarity.
5. The two i-f transformers are held to the chassis by snap-on fasteners. To remove an i-f, unsolder all the leads under the chassis, pinch together the prongs of the snap-on fastener and lift the i-f can from the chassis.
6. The color coding of the i-f transformer leads is as follows:

Grid—green	Plate—blue
Grid return—black	B plus—red

VOLTAGE ANALYSIS

Readings should be taken with a 1000 ohms-per-volt meter. Voltages listed below are from point indicated to ground (chassis) with the volume control turned on full and no signal. Line voltage for these readings was 117.5 volts, 60 cycles, a.c.

Tube	Plate	Screen	Cathode	Osc. Plate	Fil.
6A7	100.0	42	2.0	80	6.3 a.c.
6D6	100.0	100	2.0	—	6.3 a.c.
75	39.5	0	0	—	6.3 a.c.
42	87.0	100	0	—	25 a.c.
2525					

Voltage at 2525-cathode—110 volts.

Voltage drop across ballast tube (including pilot-light section) —49 volts.

Voltage drop across each pilot light section—4 volts.

REPLACEMENT PARTS

*Item	Part No.	DESCRIPTION	List Price eo. Effective as of Aug. 1st, 1934 PRICE
T1	3CT-289	Two-band antenna coil	$2.40
T2	3CT-274	456 kc first i-f transformer	1.50
T3	3CT-275	456 kc second i-f transformer	1.35
T4	3CT-290	Two-band oscillator coil	1.10
L1	3CT-207	Iron-core filter choke	.90
R1, R9	KR-53	50,000 ohm ¼ watt carbon resistor	.16
R2	IIR-150	150 ohm ½ watt wire-wound resistor	.16
R3, R4	LR-45	10,000 ohm ¼ watt carbon resistor	.16
R5	2ZR-196	30,000 ohm ¼ watt carbon resistor	.16
R6	KR-57	1 megohm, ¼ watt carbon resistor	.16
R7	2NR-214C	Volume control with line switch—250,000 ohms	1.20
R8, R11			
R12, R13	KR-55	250,000 ohm ¼ watt carbon resistor	.16
R10	OR-73	25,000 ohm ¼ watt carbon resistor	.16
R14	3CR-242	20 ohm ½ watt wire-wound resistor	.16
R15	3CR-243	220 ohm ½ watt wire-wound resistor	.16
R16	3CR-241	Plug-in type ballast resistor	.30
C1	AAC-114	0.001 mf mica condenser	.20
C3	CCC-127	0.01 mf, 200 volt tubular condenser	.30
C2		0.00005 mf. mica condenser (part of 3CT-289 antenna coil assembly)	
C4, C4	2CC-275	Two gang variable condenser	2.85
C5	BC-13	0.05 mf, 200 volt tubular condenser	.30
C6	AAC-106A	0.00005 mf mica condenser	.20
C7	3CC-302	0.15 mf, 200 volt tubular condenser	.20
C8	3EC-287	0.0042 mf mica condenser	.20
C10	2NC-221	Single adjustable padding condenser—300 to 600 mmf.	.50
C11	TC-96A	4 mf, 150 volt tubular electrolytic condenser	1.05
C12, C16	AC-6	0.1 mf, 200 volt tubular condenser	.20
C18, C20			
C21			
C13, C15	AC-7A	0.00025 mf mica condenser	.30
C14, C17	LC-65	0.02 mf, 400 volt tubular condenser	.30
C19	TTC-177	0.01 mf, 600 volt tubular condenser	.20
C22, C23	3CC-281	20 mf, 150 volt wet electrolytic condenser	.90
C25	2NC-250	0.01 mf, 250 volt a-c metal-clad tubular condenser	.20
C24	EEC-182	0.1 mf 400 volt tubular condenser	.20
	TTS-131J	Wave-band switch	.60
	3CS-171	6¾" dynamic speaker	5.25
	XL-9	Pilot light, 6.3 volt, .25 amp. Mazda No. 46	.20
	3CZ-356	Dial face	.75
	3CZ-336A	Dial drive belt	.10
	3CZ-337	Dial drive shaft and pulley	.10
	3CZ-339	Idler pulley	.06
	3CZ-340	Idler pulley spring	.05
	3CZ-341	Condenser shaft pulley	.10
	3FZ-353	Dial pointer	.10
	3CZ-350	Escutcheon with crystal	1.05

PRICES ARE SUBJECT TO CHANGE WITHOUT NOTICE

PRODUCTION CHANGES

1. In receivers bearing serial numbers below 812,500—
   a. C7 was a .1mf 200 volt tubular condenser.
   b. C16, a .1mf 200 volt tubular condenser, and R9, a 50,000 ohm resistor, were in the plate circuit of the 75 tube.
2. In receivers bearing serial numbers below 823,873—
   a. Rotor of ~~broadcast~~ SHORTWAVE oscillator trimmer was returned to ground instead of the coil.
3. In receivers bearing serial numbers below 828,500 C1 was an .01 mf 200 volt tubular condenser.

EMERSON RADIO & PHONO. CORP.

MODELS C134, C136, C138, C139, C140, C142
Chassis C
Alignment, Voltage Notes, Parts

ADJUSTMENTS

An oscillator with frequencies of 456, 600, 1600, 1800, 6000 and 16000 kc should be used.

An output meter should be used across the voice coil or speaker output transformer for observing maximum response.

Use a standard dummy antenna for aligning any of the three bands. A .0002 mf condenser may be used for the broadcast band dummy antenna, a .0001 mf condenser for police-band antenna and a 400 ohm resistor for the short-wave antenna.

The i-f transformers are located on the extreme left side of the chassis. The transformer nearest the front of the chassis is the first i-f transformer. The four trimmers for the i-f adjustment are available through holes in the tops of the cans.

The broadcast, police and short-wave coils are all located on the tuner unit. The tuner unit is the separate chassis section floated on rubber and mounted in center of chassis. The location of the trimmers for the coils is shown in the illustration at the right. The three coils for the broadcast band are in separate cans on top of the tuner unit.

Tube Data

The tube complement is as follows:

1—6K7—R-f amplifier (on r-f unit)
1—6A8—Pentagrid modulator-oscillator (on r-f unit)
1—6K7—I-f amplifier
1—6R7—Second detector, a.v.c., and a-f amplifier
1—6C5—A-f amplifier
1—6F6—Pentode output
1—6G5—Electron ray tuning indicator
1—5W4—Full-wave rectifier

I-f Alignment

Set the wave-band switch at the broadcast (clockwise) position and the variable condenser at the minimum capacity position. Feed 456 kc to the grid cap of the 6A8 tube. Adjust the four i-f trimmers carefully for maximum response. Feed 456 kc through a dummy antenna into the antenna terminal and adjust 456 wave-trap for minimum response.

Broadcast Alignment

Both pointers on the dial should coincide vertically at 690 kc. The gold pointer may be slipped around its shaft. With the wave-band switch at the broadcast (clockwise) position, set the pointer at 60, feed 600 kc through the antenna (using a standard dummy antenna), and adjust the broadcast series padder for maximum response. Move pointer to 160, feed 1600 kc to the antenna and adjust the oscillator trimmer for maximum response, then adjust detector and antenna trimmers. Reset the pointer to 60, feed 600 kc to antenna and rock the variable condenser (rotate the condenser back and forth through a small arc) while resetting the oscillator padder for maximum response. Return to 1600 and check alignment. If readjustment is necessary, return to 600 and repeat entire procedure.

Police Alignment

Set the switch at police (central) position and the pointer at 1.8. Feed 1800 kc to antenna (using a 0.0001 mf condenser for a dummy antenna), and adjust the police band series padder for maximum response. Move the pointer to 6.0, feed 6000 kc to the antenna and adjust the police-band oscillator for maximum response. If two peaks are obtained select the minimum capacity peak. (See General Instructions below.) Then adjust the antenna and detector trimmers for maximum response. If two peaks are obtained select the maximum capacity peak. Return the pointer to 1.8, feed 1800 kc to the antenna and rock the variable condenser while adjusting the police-band series padder for maximum response. Return to 6000 and check alignment. If readjustment is necessary return to 1800 and repeat entire procedure.

Short-Wave Alignment

Set the wave-band switch at the short-wave (counter-clockwise) position. Move pointer to 16, feed 16000 kc to antenna (using a 400 ohm dummy antenna) and adjust the short-wave oscillator for maximum response. If two peaks are obtained choose minimum capacity peak. Then adjust the detector and antenna trimmers for maximum response. If two peaks are obtained choose the maximum capacity peak.

GENERAL INSTRUCTIONS

The set's oscillator is higher in frequency than the signal on all three bands. Images, therefore, should be observed on the low-frequency side of the signals.

Always choose the minimum capacity peak on oscillator trimmer and maximum capacity peaks on antenna and r-f trimmers. The last motion in adjusting trimmers should always be a tightening one.

Never leave a trimmer with the outside plate so loose that there is no tension on the screw. Either bend the plate up or remove the screw entirely. Loose screws are a source of noise, frequency drift and microphonism.

In aligning antenna trimmers on the high-frequency signals there is usually a tendency for the oscillator to drift, due to interlocking. To compensate for this always keep re-tuning the variable condenser as you align.

GENERAL NOTES

1. A jack is provided at the rear of the chassis for a phonograph attachment. The pickup to be used should be of the high impedance type. A separate potentiometer type volume control is required, the overall resistance to be determined by the type of pickup chosen. The pickup leads should be connected to the two outside terminals of the volume control with the ground lead of the pickup on the right-hand terminal (looking at front with terminals at top) of the control. A lead from this terminal should be plugged into the hole in the phono jack nearest the end of the chassis. A lead from the center terminal of the volume control should be plugged into the other hole in the jack (grid side of jack). Ends of leads to be plugged in jack should be fitted with tips. The volume control in the receiver should be turned to the extreme counter-clockwise (low) position when operating phonograph. Since the phono jack is of the shorting type signals cannot be received by the set when the leads are plugged into the jack. The leads should be removed before attempting to receive broadcast stations.
2. The receiver should never be turned on with either the speaker plug or the 6F6 tube out of their sockets, since the rapid rise in rectifier voltage would damage the electrolytic condenser.
3. Pilot lights may be replaced by slipping the push-on sockets off the dial and unscrewing the bulbs. It is not necessary to remove either the dial or chassis from cabinet.
4. In replacing chassis in cabinet do not tighten mounting screws so much that chassis will not float freely, and do not allow any part of the dial assembly to touch the cabinet. Do not push control knobs on so far that they touch the cabinet front panel. If these precautions are not observed the receiver may become microphonic.
5. The color coding of the power transformer leads is as follows:
   - Primary—two black leads
   - High voltage sec.—two red leads
   - High voltage center tap—red and yellow lead
   - 6.3V sec.—two heavy green leads
   - 5V sec.—two heavy yellow leads
6. The tuning indicator (6G6 tube) is mounted in the cabinet above the dial on all the console type receivers, and in the speaker compartment on the table type receivers. On the table-type receivers it is necessary to remove the speaker from the baffle, in order to remove the tuning indicator tube assembly. The color coding of the tuning indicator tube cable is as follows:
   - Shield—cathode
   - Blue—plate
   - Red—target
   - Filament—Black
   - Green—grid
7. An efficient antenna system (often called aerial) is necessary to enable a full realization of the merits of the receiver. The Emerson All-Wave Antenna is especially designed for high efficiency and reduction of noise on all three frequency ranges. Complete instructions for the installation of this antenna are supplied with each kit.

VOLTAGE ANALYSIS

Readings should be taken with a 1000 ohms-per-volt meter. Voltages listed below are from point indicated to ground, with no signal. Line voltage for these readings was 117.5 volts, 60 cycles.

Tube	*Plate*	*Screen*	*Cathode*	*Osc. Plate*	*Fil.*
6K7 (r-f)	250	100	3.8	—	6.3 a.c.
6A8	250	100	3.8	180	6.3 a.c.
6K7 (i-f)	250	100	3.6	—	6.3 a.c.
6R7	90	—	0	—	6.3 a.c.
6C5	150	—	0	—	6.3 a.c.
6F6	240	250	0	—	6.3 a.c.
6G5	10 (blue lead)	250 (red lead)	0	—	6.3 a.c.

Voltage across speaker field—100 volts.

B plus at 5W4 filament to B minus (center tap of secondary)—350 volts.

REPLACEMENT PARTS LIST

*Item No.	Part No.	DESCRIPTION	List Price as Effective as of Aug. 1st, 1936 PRICE
L1	[illegible]	Oscillator choke	$ .20
L2	[illegible]	456 kc wave trap	.60
T1	[illegible]	Broadcast antenna coil	.95
T4	[illegible]	Broadcast detector coil	.95
T7	[illegible]	Broadcast oscillator coil	.75
T2	[illegible]	Police-band antenna coil	.60
T5	[illegible]	Police-band detector coil	.60
T8	[illegible]	Police-band oscillator coil	.50
T3	8AT-257	Short-wave antenna coil	.60
T6	8AT-258	Short-wave detector coil	.70
T9	8AT-256	Short-wave oscillator coil	.50
T10	8BT-260	456 kc first i-f transformer	2.00
T11	JAT-261	456 kc second i-f transformer	1.90
T12	8BT-271	Power transformer	5.40
R1	8AR-246	220 ohm, ½ watt wire-wound resistor	.16
R2, R16, R20	KR-53	50,000 ohm, ¼ watt carbon resistor	.16
R3	YR-97	15,000 ohm, ½ watt carbon resistor	.16
R4	FFR-136	500 ohm, ½ watt wire-wound resistor	.16
R5, R8, R14, R18, R21, R23	KR-57	1 megohm, ¼ watt carbon resistor	.16
R6, R7, R11, R15, R26	KR-54	100,000 ohm, ¼ watt carbon resistor	.16
R9	NNR-157B	Volume control—500,000 ohms	.90
R10	NNR-157B	Tone control—500,000 ohms	.90
R12, R17	OR-73	28,000 ohm, ¼ watt carbon resistor	.16
R13	KR-55	250,000 ohm ¼ watt carbon resistor	.16
R19	2CR-198	30,000 ohm, ½ watt carbon resistor	.16
R22	KR-56	500,000 ohm, ¼ watt carbon resistor	.16
R24	KR-63	15,000 ohm, ¼ watt carbon resistor	.16
R25	3BR-247	40,000 ohm, ¼ watt carbon resistor	.16
R27	LLR-162	150,000 ohm, ¼ watt carbon resistor	.16
R28	3BR-248	10,000 ohm, 2 watt carbon resistor	.28
R29	2TR-225	12,000 ohm, 2 watt carbon resistor	.28
C1, C2, C3	8AC-276	Three gang variable condenser	7.40
C4, C5, C6, C7, C8, C9, C10, C11, C12	8AC-278	1.5 to 12 mmf. trimmer condensers—(See Production Changes)	.15
C13, C14	JJC-144C	Dual adjustable padding condenser C13—250 to 500 mmf. C14—800 to 1400 mmf.	.90
C15	LC-65	0.02 mf, 400 volt tubular condenser	.20
C16, C24	AC-6	0.1 mf, 200 volt tubular condenser	.20
C17	AAC-114	0.001 mf mica condenser	.20
C18	AAC-106A	0.00005 mf mica condenser	.20
C19	NNC-158	0.05 mf, 200 volt tubular condenser	.20
C20, C35	EEC-132	0.1 mf, 400 volt tubular condenser	.20
C21, C40, C41, C42	BC-18	0.25 mf, 200 volt tubular condenser	.20
C22	IIC-133A	0.000025 mf mica condenser	.20
C23	XXC-197	0.0038 mf mica condenser	.35
C25	EC-24A	0.0001 mf mica condenser	.20
C26	IC-47	0.0005 mf mica condenser	.20
C27, C33, C34	CCC-127	0.01 mf, 200 volt tubular condenser	.20
C28	AC-7A	0.00025 mf mica condenser	.20
C29	KC-58	0.01 mf, 400 volt tubular condenser	.20
C30	AAC-112	0.25 mf, 400 volt tubular condenser	.30
C31	LC-64	0.05 mf, 400 volt tubular condenser	.20
C32	NC-70A	0.0002 mf mica condenser	.20
C36	ZC-115	0.006 mf, 1000 volt tubular condenser	.30
C37	8BC-280	40 mf, 300 volt wet electrolytic condenser	1.30
C38	8BC-281	8 mf, 250 volt dry electrolytic condenser	1.00
C39	8BC-282	12 mf, 400 volt wet electrolytic condenser	1.15
C43, C44	XXC-220	Dual 0.01 mf, 250 volt a.c. metal clad tubular condenser	.45
	8AS-166	Wave-band switch	2.25
	3BS-169	On-off switch	.50
	8BS-191	8" dynamic speaker (for Models C-134 and C-140)	8.80
	8BS-176	12" dynamic speaker (for Models C-136, C-138, C-139, and C-142)	10.60
	XL-9	Pilot light, 6.3 volt, .25 amp. Mazda No. 46	.20
	8AD-41	Dial plate with band-indicator mechanism	2.20
	8AZ-397	Dial face	1.25
	8AZ-369	Idler pulley	.05
	8AZ-370	Idler pulley spring	.05
	8AZ-371	Dial drive belt	.20
	8AZ-414*	Planetary dial drive (for two knob assembly)	1.85
	8AZ-372	Planetary dial drive (for single knob assembly)	1.85
	8AZ-365	Frequency indicating pointer	.10
	8AZ-367	Band-spread pointer	.15
	8AZ-406	Dial escutcheon with crystal	1.65
	8AZ-322A	Electron Ray socket and cable	.85
	8AZ-407	Electron Ray escutcheon	.20

When Ordering Replacement Parts Specify Part Numbers

*Item number locates the article on the schematic diagram.

PRICES ARE SUBJECT TO CHANGE WITHOUT NOTICE

PRODUCTION CHANGES

On early receivers C4, C5, C6, C7, C8, C9, C10, C11 and C12 were air trimmers part No. 8AC-252. On these trimmers a clockwise rotation of the trimmer screw decreases the capacity.

©John F. Rider, Publisher

MODELS C134, C136
C138, C139
C140, C142
Chassis C
Schematic, Socket

EMERSON RADIO & PHONO. CORP.

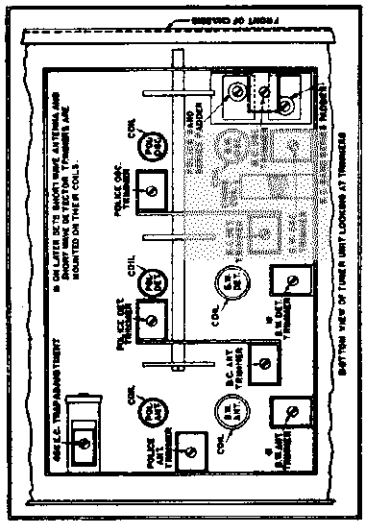

TRANSFORMER FIELD

SPEAKER SOCKET LOOKING AT PINS

I.F. PEAKED AT 456 K. C.

OUTPUT TRANS. ON SPEAKER

SPEAKER FIELD 1300 OHMS

PILOT LIGHTS

TO ALL HEATERS

TO A.C. LINE

BRD. SYMBOL INDICATES CONNECTIONS TO CHASSIS

FLOATING TUNING UNIT

REMOVE LINK WHEN TRANSMISSION LINE IS USED

ANT. - TRANS. GRD.

LINK TRANS.

456 K.C. TRAP

SWITCH SHOWN IN BROADCAST POSITION

POSITION NO. 1 - SHORT WAVE
POSITION NO. 2 - POLICE
POSITION NO. 3 - BROADCAST

Voltage rating ..... 105-125 volts, a.c.
Current drain ..... 70 amps., a.c.
Frequency ranges ..... 540 to 1800 kc, 1750 to 6000 kc, 5.5 to 18.0 megacycles.

©John F. Rider, Publisher

EMERSON RADIO & PHONO. CORP.

MODELS D134, D136, D138
D139, D140, D142
Chassis D
Schematic

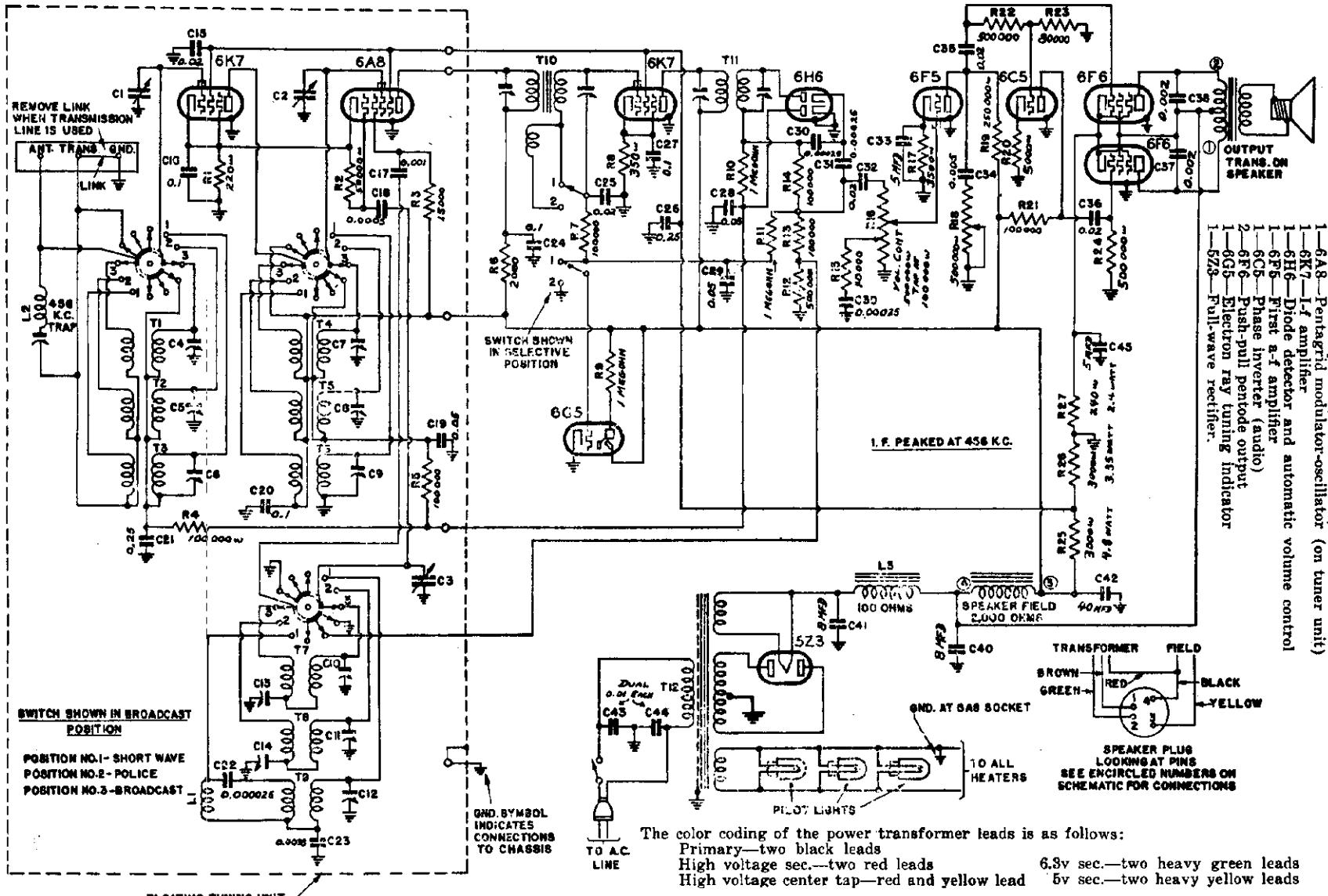

The tube complement is as follows:

1—6K7—R-f amplifier (on tuner unit)
1—6A8—Pentagrid modulator-oscillator (on tuner unit)
1—6K7—I-f amplifier
1—6H6—Diode detector and automatic volume control
1—6F6—First a-f amplifier
1—6C5—Phase inverter (audio)
2—6F6—Push-pull pentode output
1—6G5—Electron ray tuning indicator
1—5Z3—Full-wave rectifier.

The color coding of the power transformer leads is as follows:

Primary—two black leads
High voltage sec.—two red leads
High voltage center tap—red and yellow lead
6.3v sec.—two heavy green leads
5v sec.—two heavy yellow leads

The tuning indicator (6G5 tube) is mounted in the cabinet above the dial on all the console type receivers, and in the speaker compartment on the table type receivers. On the table-type receivers it is necessary to remove the speaker from the baffle, in order to remove the tuning indicator tube assembly. The color coding of the tuning indicator tube cable is as follows:

Shield—cathode
Blue—plate
Black—filament
Green—grid

Voltage rating .... 105-125 volts, a.c.
Current drain ..... 1.1 amps., a.c.
Frequency ranges . 540 to 1800 kc, 1750 to 6000 kc, 5.5 to 18.0 megacycles.

MODELS D-134, D-136, D-138, D-139, D-140, D-142 and D-146

MODELS D134, D136, D138 D139, D140, D142
Chassis D D146

EMERSON RADIO & PHONO. CORP.

Alignment, Voltage Socket, Trimmers, Notes

PRODUCTION CHANGES

On early receivers C4, C5, C6, C7, C8, C9, C10, C11 and C12 were air trimmers part No. 3AC-252. On these trimmers a clockwise rotation of the trimmer screw decreases the capacity. C21 was a .05 mf 200 volt tubular condenser.

ADJUSTMENTS

Use a standard dummy antenna for aligning any of the three bands. A .0002 mf condenser may be used for the broadcast band dummy antenna, a .0001 mf condenser for police-band dummy antenna and a 400 ohm resistor for the short-wave dummy antenna.

The i-f transformers are located on the extreme left side of the chassis. The transformer nearest the front of the chassis is the first i-f transformer. The four trimmers for the i-f adjustment are available through holes in the tops of the cans.

The broadcast, police and short-wave coils are all located on the tuner unit. The tuner unit is the separate chassis section floated on rubber and mounted in center of chassis. The location of the trimmers for the coils is shown in the illustration at the right. The three coils for the broadcast band are in separate cans on top of the tuner unit.

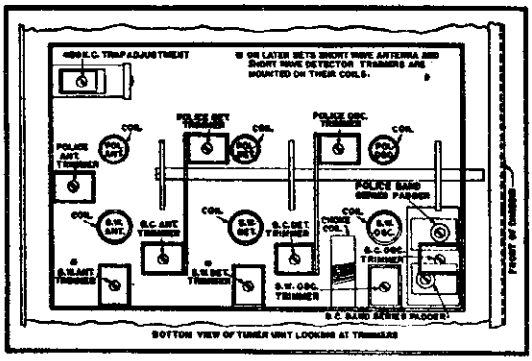

Checking High-Fidelity Operation

On the oscillograph screen the peak of the selectivity curve (i-f response curve with fidelity-selectivity switch in selective position, clockwise) should appear in a position midway between the two peaks of the high-fidelity curve (i-f response curve with fidelity-selectivity switch in fidelity position, counter clockwise). In other words the central vertical axis of the selectivity curve should be coincident on the screen with the central vertical axis of the high-fidelity curve.

An approximate check of the high-fidelity operation can be made with the use of the oscillator and output meter. First, the i-f's should be very carefully peaked at 456 kc *with the fidelity-selectivity switch in the selective position.* Turn the switch to the fidelity position, counter-clockwise, and vary the frequency of the oscillator. Two peaks should be observed on the output meter, approximately 7 kc on each side of the selectivity peak.

I-f Alignment

Set the wave-band switch at the broadcast (clockwise) position and the variable condenser at the minimum capacity position. Feed 456 kc to the grid cap of the 6A8 tube. Adjust the four i-f trimmers carefully for maximum response. Feed 456 kc through a dummy antenna into the antenna terminal and adjust the 456 kc wave-trap for *minimum response.*

Broadcast Alignment

Both pointers on the dial should coincide vertically at 890 kc. (For adjustment, the gold pointer may be slipped around its shaft.) With the wave-band switch at the broadcast (clockwise) position, set the pointer at 60, feed 600 kc through the antenna (using a standard dummy antenna), and adjust the broadcast series padder for maximum response. Move pointer to 160, feed 1600 kc to the antenna and adjust the oscillator trimmer for maximum response, then adjust detector and antenna trimmers. Reset the pointer to 60, feed 600 kc to antenna and rock the variable condenser (rotate the condenser back and forth through a small arc) while resetting the oscillator padder for maximum response. Return to 1600 and check alignment. If readjustment is necessary, return to 600 and repeat entire procedure.

Police Alignment

Set the switch at police (central) position and the pointer at 1.8. Feed 1800 kc to antenna (using a 0.0001 mf condenser for a dummy antenna), and adjust the police band series padder for maximum response. Move the pointer to 6.0, feed 6000 kc to the antenna and adjust the police-band oscillator for maximum response. If two peaks are obtained select the minimum capacity peak. (See General Instructions below.) Then adjust the antenna and detector trimmers for maximum response. If two peaks are obtained select the maximum capacity peak. Return the pointer to 1.8, feed 1800 kc to the antenna and rock the variable condenser while adjusting the police-band series padder for maximum response. Return to 6000 and check alignment. If readjustment is necessary return to 1800 and repeat entire procedure.

Short-Wave Alignment

Set the wave-band switch at the short-wave (counter-clockwise) position. Move pointer to 16, feed 16000 kc to antenna (using a 400 ohm dummy antenna) and adjust the short-wave oscillator for maximum response. If two peaks are obtained choose minimum capacity peak. Then adjust the detector and antenna trimmers for maximum response. If two peaks are obtained choose the maximum capacity peak.

GENERAL INSTRUCTIONS

The set's oscillator is higher in frequency than the signal on all three bands. Images, therefore, should be observed on the low-frequency side of the signals.

Always choose the minimum capacity peak on oscillator trimmers and maximum capacity peaks on antenna and r-f trimmers. The last motion in adjusting trimmers should always be a tightening one.

Never leave a trimmer with the outside plate so loose that there is no tension on the screw. Either bend the plate up or remove the screw entirely. Loose screws are a source of noise, frequency drift and microphonism.

In aligning antenna trimmers on the high-frequency signals there is usually a tendency for the oscillator to drift, due to interlocking. To compensate for this always keep re-tuning the variable condenser as you align.

Always use as weak a test signal as possible during alignment.

Readings should be taken with a 1000 ohms-per-volt meter. Voltages listed below are from point indicated to ground, with no signal. Line voltage for these readings was 117.5 volts, 60 cycles.

Tube	*Plate*	*Screen*	*Cathode*	*Osc. Plate*	*Fil.*
6A8 osc.-mod.	210	100	3.2	150	6.3 a.c.
6K7 r-f amp.	215	100	3.2	—	6.3 a.c.
6K7 i-f amp.	215	100	2.6	—	6.3 a.c.
6H6 diode det.	—	—	0	—	6.3 a.c.
6F5 1st audio	75	—	1.1	—	6.3 a.c.
6C5 phase inverter	98	—	4	—	6.3 a.c.
6F6 output	330	335	22	—	6.3 a.c.
6F6 output	330	335	22	—	6.3 a.c.

Voltage at 5Z3 filament—350.
Voltage across speaker field—110.
Voltage across choke—15.
Voltages, to chassis measured along voltage divider, starting at end nearest rear of chassis.
Tap 1 (nearest rear of chassis)—215
Tap 2—100
Tap 3—0
Tap 4—22

© John F. Rider, Publisher

EMERSON RADIO & PHONO. CORP.

MODELS H130, H137
Chassis H
Schematic, Voltage
Alignment

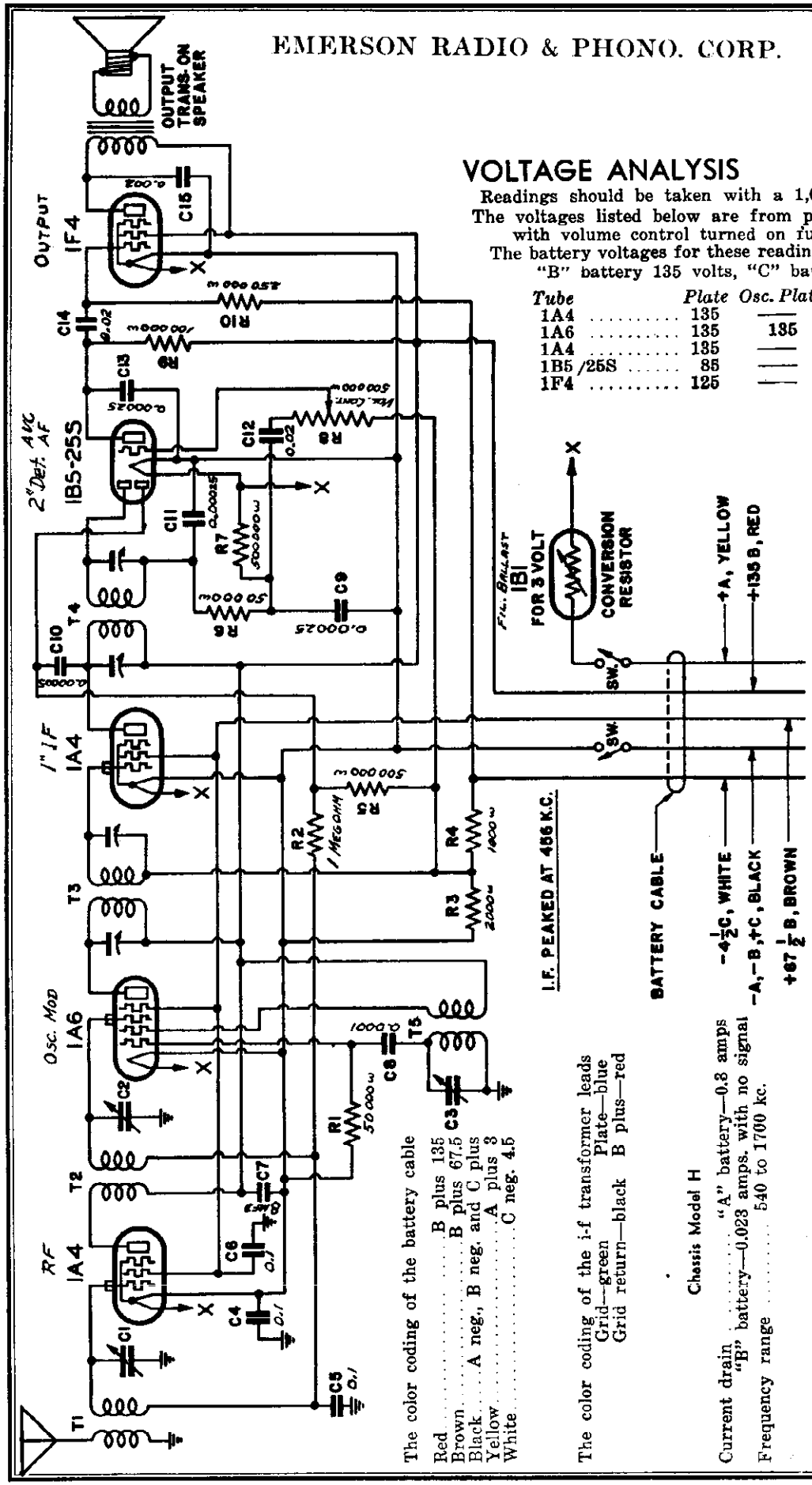

VOLTAGE ANALYSIS

Readings should be taken with a 1,000 ohms-per-volt meter. The voltages listed below are from point indicated to A minu with volume control turned on full and no signal.
The battery voltages for these readings "A" battery 3 volts, "B" battery 135 volts, "C" battery 4.5 volts.

Tube	*Plate*	*Osc. Plate*	*Screen*	*Fil.*
1A4	135	—	67.5	2.0
1A6	135	135	67.5	2.0
1A4	135	—	67.5	2.0
1B5/25S	85	—	—	2.0
1F4	125	—	135	2.0

If it is definitely known that a 2 volt storage battery will always be used it is permissable and advisable to short-circuit the two heavy prongs on the 1B1 tube by connecting them with a short piece of bare wire. *Be sure that the two small prongs on the tube are free of this bare wire.*

Location of I-f Transformers and Trimmers

The first i-f transformer, part number 3HT-287 is in an oblong coil can located on the top of the chassis to the right of the speaker. The two trimmers for this i-f are accessible through holes in the top of the coil can.

The second i-f transformer, part number 3HT-288 is in an oblong coil can located directly behind the second i-f tube. The two trimmers for this i-f are accessible through holes in the top of the coil can.

The oscillator, antenna, and r-f trimmers are located on the top of the variable condenser. The oscillator trimmer is on the center section of the variable condenser, the antenna trimmer is on the front section of the variable condenser

©John F. Rider, Publisher

MODELS 409, 410, 411
Chassis U4C
Schematic, Voltage
Alignment, Parts

EMERSON RADIO & PHONO. CORP.

Chassis Model U4C

Voltage rating ..... 105 to 130 volts a-c. or d-c.
Current drain ..... 0.38 amps.
Frequency range ..... 54C to 1650 kc.

TUBE COMPLEMENT

The tubes used are as follows:
1 - 6D6, r-f. amplifier.
1 - 6C6, biased detector.
1 - 43, power output pentode.
1 - 25Z5, dual half-wave rectifier.

VOLTAGE ANALYSIS

Readings should be taken with a 1000 ohms-per-volt meter. Voltages listed below are from point indicated to ground (chassis) with volume control turned on full and no signal. The line voltage for these readings was 117.5 volts, 60 cycles, a-c.

Tube	Plate	Screen	Cathode	Fil.
6D6	100	102	3	6.3
6C6	90	21	2	6.3
43	96	101	15	25.0

Voltage across speaker field (2525 cathode to chassis) - 118 volts.
Voltage across choke (2525 cathode to 43 screen) - 16.5 volts.

ALIGNMENT PROCEDURE

An oscillator with a frequency of 1425 kc. is required.
Rotate the variable condenser shaft 25 degrees from the minimum capacity position. (This may be done by affixing a protractor, or a similarly calibrated scale, to the condenser shaft.) With the condenser in this position, feed 1425 kc. to the antenna and adjust both trimmers on the variable condenser for maximum response. Use as weak a test signal as possible.

Range: The receiver is designed to operate over the broadcast range from 540 to 1650 kilocycles. This range covers all of the standard American broadcast stations and some of the low-frequency police transmitters.

Power Supply: The power supply for this receiver should be either a. c. 50 to 60 cycles, or d. c., of any voltage between 105 and 130 volts. With special external line cord ballast resistors this receiver may be operated on higher voltages.

THE RECEIVER WAS DESIGNED TO OPERATE WITHOUT A GROUND. UNDER NO CIRCUMSTANCES SHOULD A GROUND WIRE BE PERMITTED TO COME IN CONTACT WITH ANY METAL PART OF THE RECEIVER.

PRODUCTION CHANGES

In early production receivers—
a. R9 was omitted.
b. R4 was a 600,000 ohm ¼ watt carbon resistor.

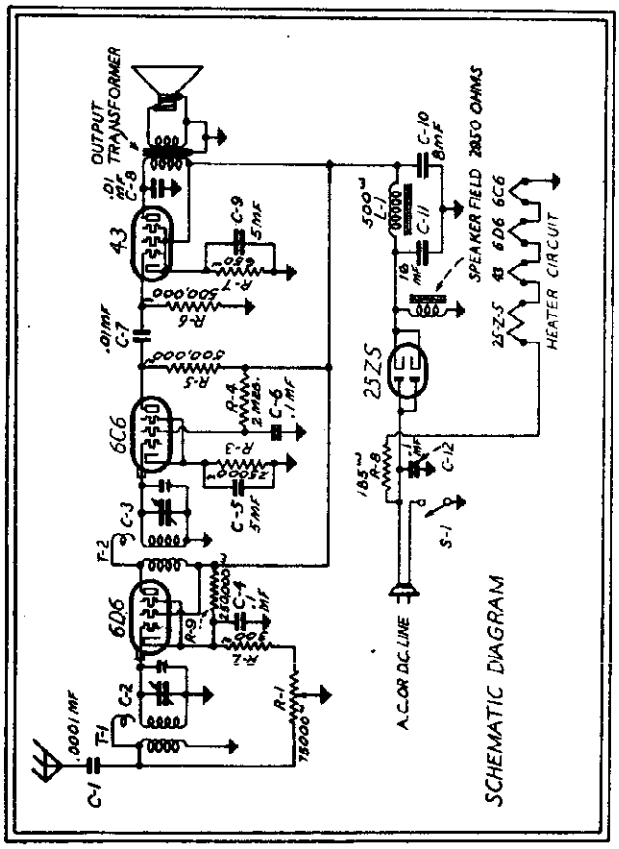

REPLACEMENT PARTS

*ITEM	PART NO.	DESCRIPTION	PRICE List Price as of Sept. 1st, 1945
			$ .60
L1	ZZT-196	Iron-core filter choke—600 ohms	.55
T1	2WT-240	Antenna coil	.55
T2	2VT-242	Detector coil	.75
R1	2WR-218	Volume control with line switch—75,000 ohms	.15
R2	AAR-119	300 ohm ½ watt wire-wound resistor	.15
R3	CR-75	25,000 ohm ¼ watt carbon resistor	.15
†R4	HR-62	2 megohm ¼ watt carbon resistor	.15
†R5, R6	KR-56	600,000 ohm ¼ watt carbon resistor	.15
R7	KRE-135A	650 ohm 1 watt wire-wound resistor	.15
R8		185 ohm, 17 watt resistor built into line cord (see part no. KKW-46A below).	
R9	KR-55	250,000 ohm ¼ watt carbon resistor	.15
†C1	AC-114	0.0001 mf. mica condenser	.15
C2	RC-79	Trimmer mica condenser	1.35
C3, C5	AC-5	0.1 mf., 200 volt tubular condenser	.15
C4, C6	2WC-239	Combination filter and by-pass electrolytic condenser block.	1.65
C8, C9, C10		C8—.5 mf. 25 volts. C9—5 mf. 25 volts. C10—8 mf. 150 volts.	
C7	CCC-197	0.01 mf. 200 volt tubular condenser	.15
C8	KC-58	0.01 mf. 400 volt tubular condenser	.15
C11	2WC-240	16 mf. 150 volt dry electrolytic condenser block	1.00
C12	2VC-242	0.1 mf. 250 volt a-c tubular condenser	.15
	2WS-167	6" dynamic speaker	5.25
	KKW-46A	Line cord with built-in resistance wire	.70

† See Production Changes below.
* Item number locates the article on the schematic diagram.

PRICES ARE SUBJECT TO CHANGE WITHOUT NOTICE

WHEN ORDERING REPLACEMENT PARTS SPECIFY PART NUMBERS

©John F. Rider, Publisher

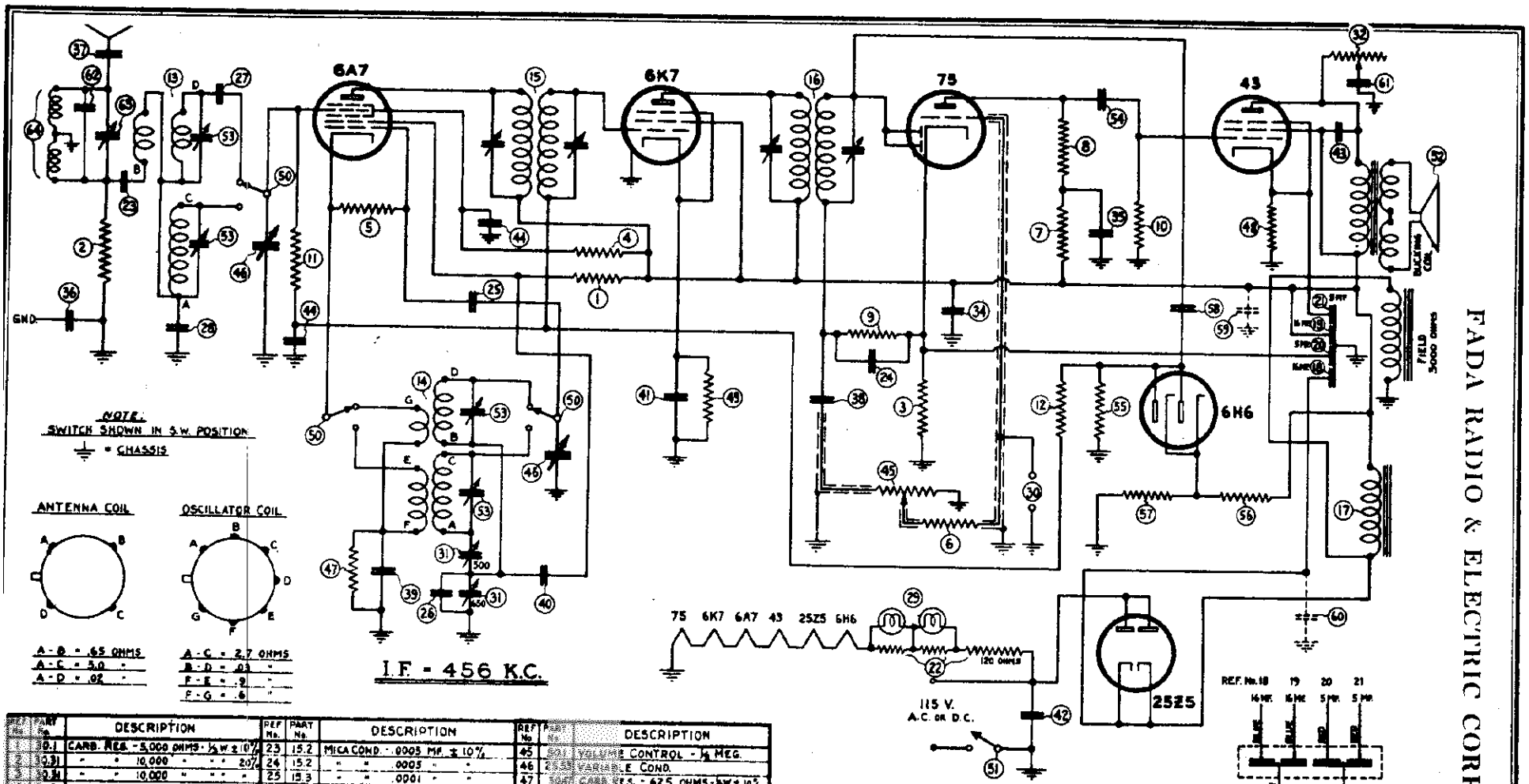

REF No.	PART No.	DESCRIPTION
1	30.1	CARB. RES. - 5,000 OHMS - ½ W ± 10%
2	30.31	" " 10,000 " " " 20%
3	30.34	" " 10,000 " " "
4	30.7	" " 15,000 " " " 10%
5	30.3	" " 50,000 " " "
6	30.26	" " 50,000 " " " 20%
7	30.25	" " 50,000 " " "
8	30.20	" " 250,000 " " "
9	30.23	" " 500,000 " " "
10	30.23	" " 500,000 " " "
11	30.22	" " 1 MEG " " "
12	30.22	" " 1 " " " "
13	2026	ANTENNA COIL
14	3116	OSCILLATOR "
15	3879	1ST I.F. "
16	3880	2ND I.F. "
17	40.1	CHOKE - 300 OHMS
18	20.36	ELECTRO. COND. BLOCK - 16 MF. 100 WV
19	20.36	" " " 16 - 100 "
20	20.36	" " " 5 - 25 "
21	20.36	" " " 5 - 25 "
22	115.1	LINE RESISTOR - 120 - 38 - 36 OHMS
23	15.2	MICA COND. - .0005 MF. ± 10%
24	15.2	" " .0005 " "
25	15.3	" " .0001 " "
26	15.19	" " .0015 " "
27	15.5	" " .002 - 3%
28	15.6	" " .0025 " "
29	120.1	PILOT LIGHTS 6.3 V .25 A
30	125.1	PHONO JACK
31	25.1	PADDING COND. - 650 - 500 MMF
32	55.10	TONE CONTROL - 200,000 OHMS
33		
34	10.2	TUBULAR COND. .1 MF. 200 WV
35	10.2	" " .1 " " "
36	10.3	" " .006 - 400 "
37	10.4	" " .01 - 200 "
38	10.4	" " .01 - " "
39	10.5	" " .05 " " "
40	10.5	" " .05 " " "
41	10.5	" " .05 " " "
42	10.7	" " .03 - 400 "
43	10.10	" " .01 - 400 "
44	10.6	" - DUAL .05 - 200 "
45	50.1	VOLUME CONTROL - ½ MEG.
46	25.33	VARIABLE COND.
47	30.27	CARB. RES. - 625 OHMS - ½ W ± 10%
48	30.28	" " 350 " ½ " "
49	30.29	" " 250 " " "
50	45.1	BAND SWITCH
51		ON-OFF S.W. ON VOL. CONT. (45)
52	105.1	SPEAKER - 3,000 OHMS
53		TRIM. ADJ. ON COILS
54	10.4	TUBULAR COND. .01 MF. - 200 V
55	30.6	CARB. RES. - 500,000 OHMS - ½ W ± 10%
56	30.6	" " 250,000 " " "
57	30.2	" " 10,000 " " "
58	15.3	MICA COND. - .0001 MF. ± 10%
59	20.25	TUBULAR ELECTRO. COND. - 8 MF. 150 WV.
60	20.25	" " " 8 " "
61	10.5	TUBULAR COND. .05 MF. 200 W.V.
62	15.11	MICA COND. - .0004 MF. ± 10%
63	25.50	TRIMMING COND. - 150 MMF.
64	6005	WAVE TRAP COIL

1ST I.F. TRANS
PRI. - 14.5 OHMS
SEC. - 14.5 "

2ND I.F. TRANS
PRI. - 14.5 OHMS
SEC. - 14.5 "

NOTE: REF. NOS. 62, 63 & 64 ADDED
REF. No. 56 WAS 50,000 OHMS ½ W. ± 10%

FADA RADIO & ELECTRIC CO. LONG ISLAND CITY, N.Y.	
MODEL 167	
DRAWN BY JP	DATE 12-12-36
CHECKED BY	APP. RFS

FADA RADIO & ELECTRIC CORP.

MODEL 167
Schematic
Parts Li

FADA PAGE

MODEL 168
Schematic
Changes, Parts

FADA RADIO & ELECTRIC CORP.

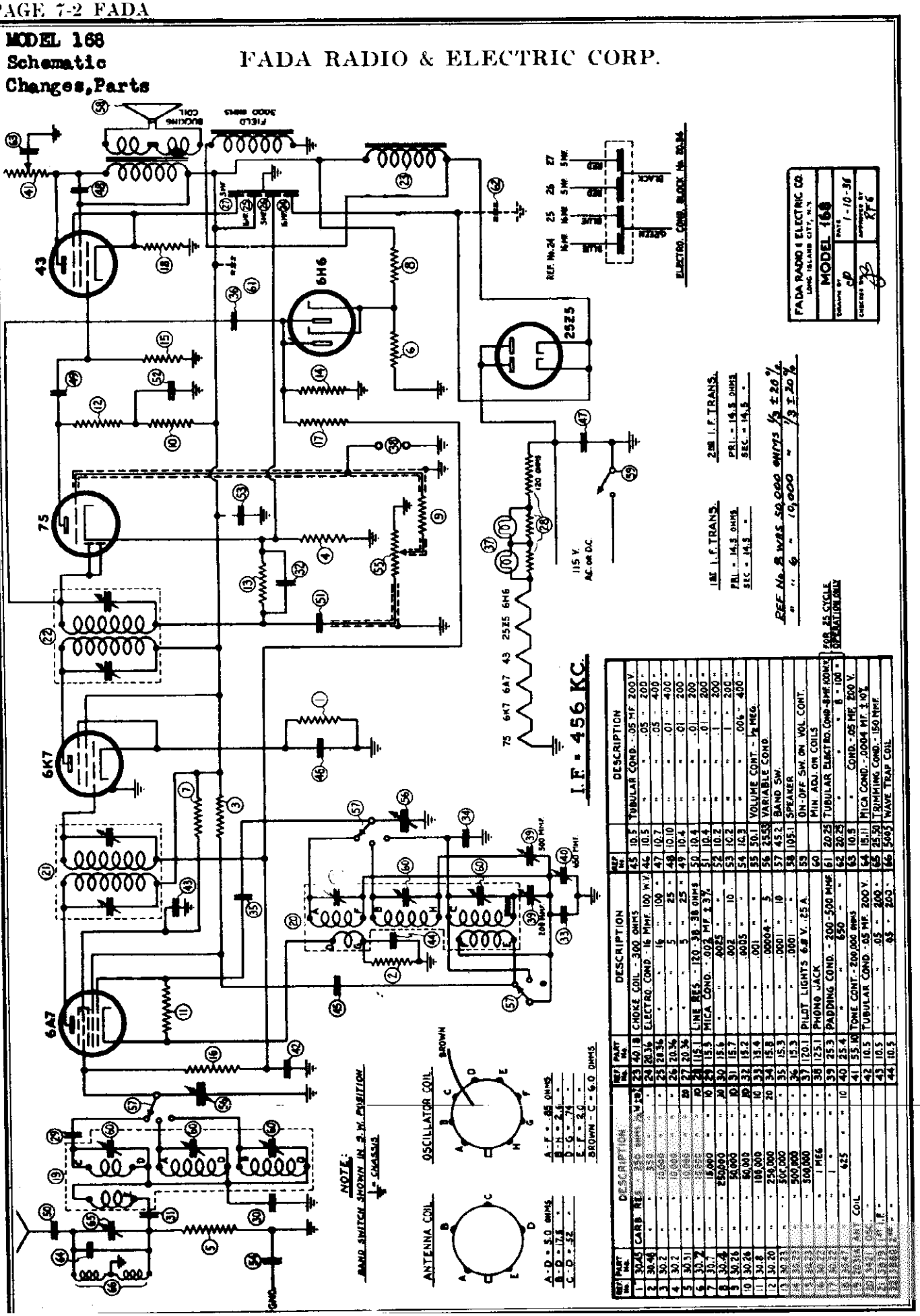

REF No.	PART No.	DESCRIPTION	REF No.	PART No.	DESCRIPTION	REF No.	PART No.	DESCRIPTION
1	30.45	CARB. RES. 250 OHMS ½ W.	23	40.18	CHOKE COIL - 300 OHMS	45	10.5	TUBULAR COND. - .05 MF. 200 V.
2	30.46	" " 500 " "	24	26.36	ELECTRO. COND. - 16 MMF. 100 W.V.	46	10.5	" " .05 " 200 "
3	30.2	" " 10000 " "	25	28.36	" " 16 " 100 "	47	10.7	" " .05 " 400 "
4	30.2	" " 10000 " "	26	20.36	" " 5 " 25 "	48	10.10	" " .01 " 400 "
5	30.51	" " 15000 " "	27	20.36	" " 5 " 25 "	49	10.4	" " .01 " 200 "
6	30.7	" " 15000 " "	28	16.1	LINE RES. - 120-36-36 OHMS	50	10.4	" " .01 " 200 "
7	30.7	" " 15000 " "	29	15.5	MICA COND. .002 MF ±3%	51	10.4	" " .01 " 200 "
8	30.4	" " 250000 " "	30	15.6	" " .0025 " "	52	10.2	" " .1 " 200 "
9	30.26	" " 50,000 " "	31	15.7	" " .002 " 10	53	10.2	" " .1 " 200 "
10	30.26	" " 50,000 " "	32	15.2	" " .0005 " "	54	10.3	" " .006 " 400 "
11	30.8	" " 100,000 " "	33	15.4	" " .001 " "	55	50.1	VOLUME CONT. - ½ MEG.
12	30.20	" " 250,000 " "	34	15.8	" " .00004 " 5	56	25.58	VARIABLE COND.
13	30.33	" " 500,000 " "	35	15.3	" " .0001 " 10	57	45.2	BAND SW.
14	30.33	" " 500,000 " "	36	15.3	" " .0001 " "	58	105.1	SPEAKER
15	30.33	" " 500,000 " "	37	120.1	PILOT LIGHTS 6.8 V. .25 A.	59		ON-OFF SW. ON VOL. CONT.
16	30.22	" " 1 MEG " "	38	125.1	PHONO JACK	60		MIN. ADJ. ON COILS
17	30.22	" " 1 " "	39	25.3	PADDING COND. - 200-500 MMF.	61	20.25	TUBULAR ELECTRO. COND. 8 MF. 600 W.
18	30.47	" " 625 " "	40	25.4	" " 850 " "	62	20.25	" " " 8 " 100 "
19	30.33	ANT. COIL	41	55.10	TONE CONT. - 200,000 OHMS	63	10.5	" COND. - .05 MF. 200 V.
20	30.40	" "	42	10.5	TUBULAR COND. - .05 MF. 200 V.	64	15.11	MICA COND. - .0004 MF. ±10%
21	30.33	OSC. "	43	10.5	" " .05 " 200 "	65	25.50	TRIMMING COND. - 150 MMF.
22	30.33	1st I.F. "	44	10.5	" " .05 " 200 "	66	50.3	WAVE TRAP COIL
23	30.33	2nd I.F. "						

©John F. Rider, Publisher

MODEL 211 Schematic Voltage, Parts

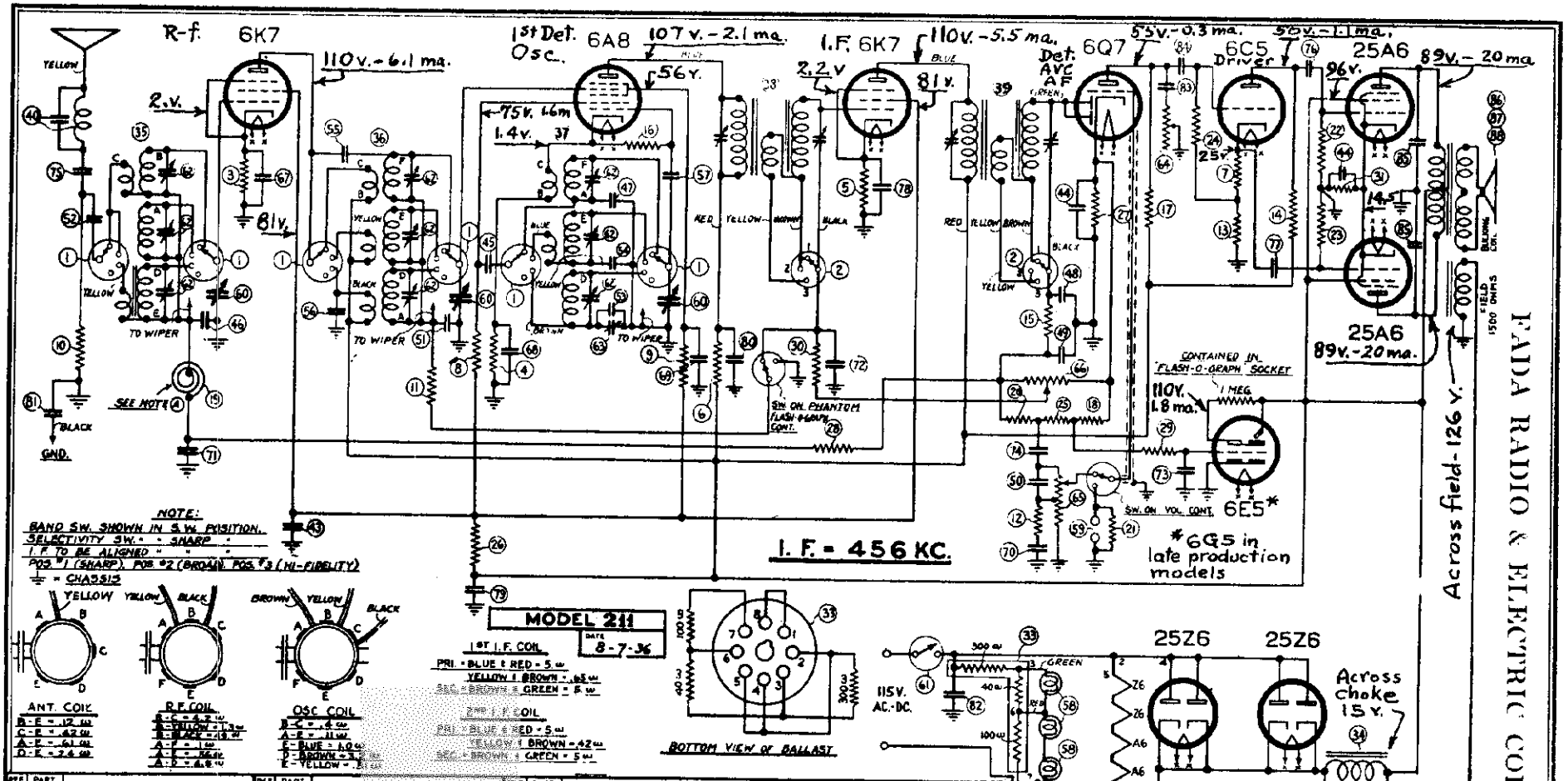

REF No	PART No	DESCRIPTION
1	45.34	BAND SWITCH
2	45.32	SELECTIVITY SWITCH
3	30.45	CARB. RES. - 250 OHMS ½W ±10%
4	30.45	" " 250 " " " "
5	30.63	" " 300 " " " "
6	30.35	" " 1000 " " " 20
7	30.15	" " 2,000 " " " 10
8	30.1	" " 5000 " " " "
9	30.2	" " 10000 " " " "
10	30.31	" " 10,000 " " " 20
11	30.31	" " 10,000 " " " "
12	30.58	" " 20,000 " " " 10
13	30.59	" " 27,000 " " " "
14	30.10	" " 30,000 " " " "
15	30.26	" " 50,000 " " " 20
16	30.8	" " 100,000 " " " 10
17	30.66	" " 150,000 " " " 20
18	30.62	" " 400,000 " " " 10
19	32.16	CHOKE COIL - 2.3 MH.
20	30.20	CARB. RES. 250,000 OHMS ½W ±20%
21	30.23	" " 500,000 " " " "
22	30.23	" " 500,000 " " " "
23	30.23	CARB. RES. - 500,000 OHMS ½W ±10%
24	30.23	" " 500,000 " " " "
25	30.67	" " 600,000 " " " "
26	30.12	" " 4,000 " " " "
27	30.65	" " 4,000 " " " "
28	30.28	" " 2,000,000 " " " "
29	30.28	" " 2,000,000 " " " "
30	30.28	" " 2,000,000 " " " "
31	30.43	" " 315 " 1W ±10%
32	10.30	TUBULAR COND. - .75 MF. 200 V
33	15.17	BALLAST RES. - 400-100-300 OHMS
34	40.3A	CHOKE COIL - 200 OHMS
35	35.15	ANTENNA
36	35.16	R.F. "
37	35.17	OSCILLATOR "
38	35.18	1ST I.F. "
39	35.19	2ND I.F. "
40	35.6	WAVE TRAP
41	20.47	ELECTRO COND. - 3 MF. 100 V
42	20.47	" " 16 " 100 "
43	20.25	" " 8 " 100 "
44	20.44	" DUAL " 10-10 " 25 "
45	15.7	MICA COND. - .002 MF. ± 10%
46	15.5	" " .002 " 3 "
47	15.62	" " .004 " 5 "
48	15.3	" " .0001 " 10 "
49	15.3	" " .0001 " "
50	15.3	" " .0001 " "
51	15.6	" " .0025 " 3 "
52	15.2	" " .0005 " 10 "
53	15.52	" " .00026 " 5 "
54	15.63	" " .00093 " 3 "
55	15.16	" " 3 MMF 10 "
56	15.6	" " .35 " 5 "
57	15.0	" " 50 " 10 "
58	120.3	PILOT LT. 3 - 6-8 V. .15 A
59	125.1	PHONO JACK
60	25.61	VARIABLE COND
61		ON-OFF SW. ON TONE CONT.
62		MIN. ADJ. ON COILS
63	25.49	PADDING COND - 70 MMF
64	35.1	TONE CONTROL - ½ MEG.
65	50.24	VOLUME 1 MEG TAPPED at 50% CCW
66	50.24	PHANTOM FLASH-O-GRAPH CONTROL
67	10.5	TUBULAR COND. .05 MF 200 V
68	10.5	" " .05 " 200 "
69	10.5	" " .05 " 200 "
70	10.5	" " .05 " 200 "
71	.0.26	" " .02 " 200 "
72	10.26	" " .02 " 200 "
73	10.26	" " .02 " 200 "
74	10.4	" " .01 " 200 "
75	10.4	" " .01 " 200 "
76	10.2	" " .1 " 200 "
77	10.2	" " .1 " 200 "
78	10.2	" " .1 " 200 "
79	10.2	" " .1 " 200 "
80	10.2	" " .1 " 200 "
81	10.23	" " .006 " 200 "
82	10.9	" " .1 " 400 "
83	10.10	" " .01 " 400 "
84	10.10	" " .01 " 400 "
85	10.17	" DUAL " .001 " 600 "
86	105.44	SPEAKER - 1500 ω (PRIM. 2W.T.)
87	105.45	" " (2W.T.)
88	105.46	" " (2W.T.)

SPEAKER D.C. RES. VALUES

PART NO.	A.-F. TRANS.		VOICE C.
105.44	PRIM. 740*	SEC. .5**	2.0
105.45	740*	.7**	2,7
105.46	700*	.8**	2.5

* THESE ARE COLD D.C. RES. VALUES
* THIS READING INCLUDES RES. OF HUM BUCK. COIL

NOTE (A) ON 50 CY. EARL: MODELS A 250 OHM NTC WAS USED IN PLACE OF THIS CHOKE
NOT (B) ON LATER MODELS THIS TUB. COND. HAS BEEN ADDED.

FADA RADIO & ELECTRIC CORP.

MODEL 250, 2 Types
Early, Up to Serial 50698
Late, From Serial 50699
Schematic, Parts List

FADA RADIO & ELECTRIC CORP.

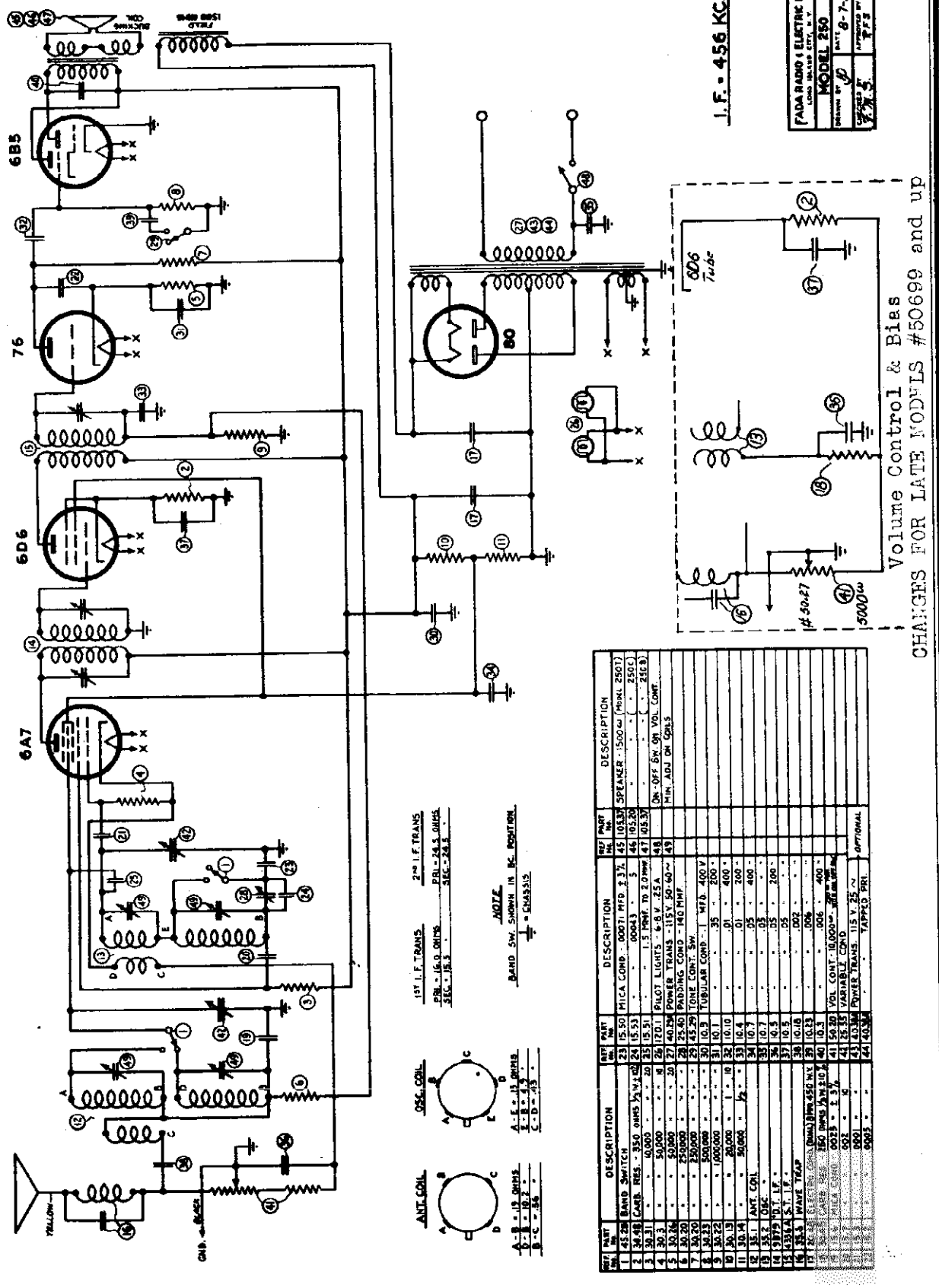

REF. No.	PART No.	DESCRIPTION
1	45.28	BAND SWITCH
2	34.48	CARB. RES. - 350 OHMS ½ WATT
3	30.31	" " 10,000 " " " 20
4	30.3	" " 50,000 " " " 10
5	30.26	" " 50,000 " " " 30
6	30.20	" " 250,000 " " " -
7	30.29	" " 250,000 " " " -
8	30.33	" " 500,000 " " " -
9	30.22	" " 1,000,000 " " " -
10	30.13	" " 25,000 " 1 " 10
11	30.14	" " 50,000 " ½ " 5
12	35.1	ANT. COIL
13	35.2	OSC. "
14	9979	1ST I.F. "
15	4336	2ND I.F. "
16	35.3	WAVE TRAP
17	30.2	FIXED COND. 0001 MFD. 450 W.V.
18	30.1	" " MICA " 0023 " ± 3%
19	30.5	" " " 002 " " 10
20	30.6	" " " 0001 " "
21	30.7	" " " 0005 " "

REF. No.	PART No.	DESCRIPTION
23	15.50	MICA COND. - 00071 MFD. ± 3%
24	15.53	" " - .00043 " "
25	15.51	" " - 1.5 MMF. TO 2.0 MMF
26	120.1	PILOT LIGHTS - 6-8 V. .25 A
27	40.24	POWER TRANS - 115 V. 50-60~
28	25.40	PADDING COND. - 140 MMF
29	45.29	TONE CONT. SW
30	10.9	TUBULAR COND. - 1 MFD. 400 V
31	10.1	" " - .35 " 200 "
32	10.10	" " - .01 " 400 "
33	10.4	" " - .01 " 200 "
34	10.7	" " - .05 " 400 "
35	10.7	" " - .03 " "
36	10.5	" " - .05 " 200 "
37	10.5	" " - .05 " "
38	10.18	" " - .002 " "
39	10.23	" " - .006 " 400 "
40	10.3	" " - .006 " "
41	54.20	VOL. CONT. - 10,000ω
42	25.35	VARIABLE COND.
43	43.36	Power TRANS. - 115 V. 25~
44	40.36	" " " TAPPED PRI.

OPTIONAL

MODEL 260
Schematic
Parts

FADA RADIO & ELECTRIC CORP.

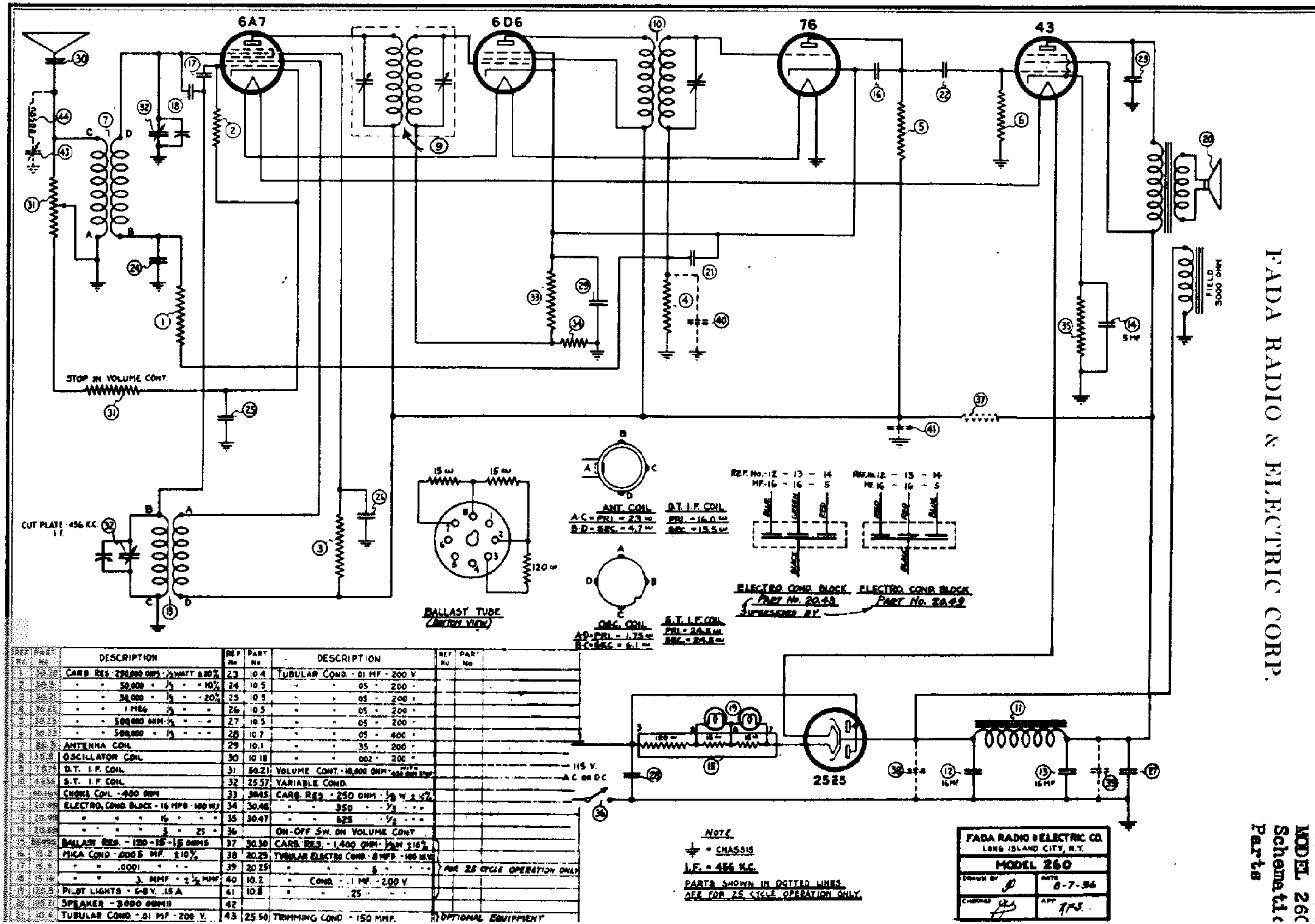

REF. No.	PART No.	DESCRIPTION	REF. No.	PART No.	DESCRIPTION	REF. No.	PART No.
1	[illegible]	CARB. RES. - 250,000 OHMS - 1/3 WATT ± 20%	23	10.4	TUBULAR COND. - .01 MF. - 200 V.		
2	[illegible]	" " 50,000 " 1/3 " " 10%	24	10.5	" " .05 " 200 "		
3	[illegible]	" " 34,000 " 1/3 " " 20%	25	10.5	" " .05 " 200 "		
4	[illegible]	" " 1 MEG. 1/3 " "	26	10.5	" " .05 " 200 "		
5	[illegible]	" " 500,000 OHM 1/3 " " "	27	10.5	" " .05 " 200 "		
6	[illegible]	" " 500,000 " 1/3 " " "	28	10.7	" " .05 " 400 "		
7	[illegible]	ANTENNA COIL	29	10.1	" " .35 " 200 "		
8	[illegible]	OSCILLATOR COIL	30	10.18	" " .002 " 200 "		
9	[illegible]	D.T. I.F. COIL	31	50.21	VOLUME CONT. - 18,000 OHM - WITH 450 OHM TAP		
10	[illegible]	S.T. I.F. COIL	32	25.57	VARIABLE COND.		
11	[illegible]	CHOKE COIL - 400 OHM	33	30.45	CARB. RES. - 250 OHM - 1/3 W. ± 10%		
12	[illegible]	ELECTRO. COND. BLOCK - 16 MFD. - 180 W.V.	34	30.46	" " 350 " 1/3 " " "		
13	[illegible]	" " " 16 " " "	35	30.47	" " 625 " 1/2 " " "		
14	[illegible]	" " " 5 " 25 "	36		ON-OFF SW. ON VOLUME CONT.		
15	[illegible]	BALLAST RES. - 120 - 15 - 15 OHMS	37	30.30	CARB. RES. - 1,400 OHM - 1/2 W. ± 10% } FOR 25 CYCLE OPERATION ONLY		
16	[illegible]	MICA COND. - .0005 MF. ± 10%	38	20.25	TUBULAR ELECTRO. COND. - 8 MFD. - 180 W.V.		
17	[illegible]	" " .0001 " " "	39	20.25	" " " 8 " " "		
18	[illegible]	" " 3 MMF. - 1 1/2 MMF.	40	10.2	" COND. - .1 MF. - 200 V.		
19	[illegible]	PILOT LIGHTS - 6-8 V. .15 A.	41	10.8	" " .25 " " "		
20	[illegible]	SPEAKER - 3000 OHM FIELD	42				
21	10.6	TUBULAR COND. - .01 MF. - 200 V.	43	25.50	TRIMMING COND. - 150 MMF. } OPTIONAL EQUIPMENT		

©John F. Rider, Publisher

MODEL 260
Alignment, Voltage Socket, Trimmers

FADA RADIO & ELECTRIC CORP.

ALIGNING INSTRUCTIONS FOR MODEL 260 SERIES

In order to adjust accurately the various trimmer condensers of the receiver in accordance with the following instructions, it is essential to use a shielded signal generator capable of giving a modulated carrier which can be attenuated at 456 KC and 1500 KC.

This receiver is equipped with an automatic overload control which necessitates setting the manual volume control of the receiver to the maximum position, to assure accuracy in alignment. To control the signal output of the receiver it will be necessary to use the attenuator control of the signal generator.

NOTE: Do not remove knobs, screws or chassis from the cabinet before removing the line cord plug from the power line socket. If the above precaution is not followed a severe electric shock, or damage to the receiver, may result.

ADJUSTMENT OF I.F. CONDENSERS

The three (3) intermediate frequency (I.F.) condensers are located as shown in the sketch.

1st - Turn the rotor plates of the ganged variable condenser to a position where no broadcast station carrier is heard. If this is not possible, connect a .1 mfd. tubular condenser from the oscillator stator section (see sketch) of the ganged variable condenser to chassis.

2nd - Disconnect the control grid lead from the 6A7 oscillator-modulator tube.

3rd - Connect the high potential lead of the signal generator to the control grid of the 6A7 oscillator-modulator tube, and the low potential lead to the receiver chassis.

4th - Place an output meter (copper oxide type) across the speaker voice coil terminals so that variations in signal output can be noted.

5th - Place the signal generator in operation and adjust the carrier frequency to 456 KC. Regulate the attenuator control of the signal generator so that the output signal is low enough to insure accuracy in adjusting the I.F. condensers.

6th - With the aid of a bakelite type screw driver, adjust the three (3) I.F. condensers to resonance as indicated by the greatest swing of the needle on the output meter.

ADJUSTMENT OF THE GANGED VARIABLE CONDENSER

The compensators are located at the top of their respective tuning condenser section and can be adjusted with the aid of a screw drive

1st - Remove signal generator connection from control grid of 6A7 oscillator-modulator tube and replace control grid lead.

2nd - Connect the antenna wire of the receiver to the high potentio lead of the signal generator through a 250 mmfd. condenser.

3rd - Adjust the carrier frequency of the signal generator to 1500 KC.

4th - Set the dial pointer directly at "E" in the word "POLICE" with the ganged variable condenser rotor plates open.

5th - Rotate the receiver dial to read 1500 KC.

6th - Starting with the compensator nearest the front of the receiver, adjust each compensator (as indicated on sketch) for maximum signal output. Do not disturb the setting of the gang condenser during these operations.

Voltage across 3,000 ohm speaker field	128 volts
" " 300 " filter choke	15.5 "

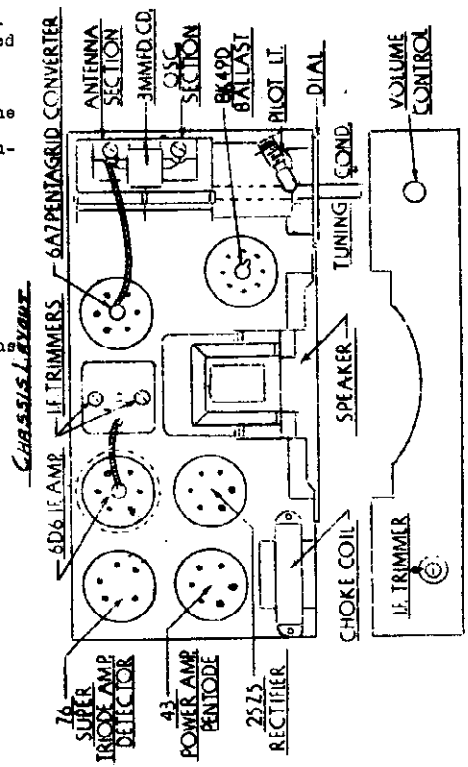

CONTINUITY AND VOLTAGE READINGS ON MODEL 260 SERIES

Line Voltage - 119 v. A.C. Input watts - 48

TYPE OF TUBE	POSITION OF TUBE	PLATE VOLTS	PLATE MA CURRENT	CONTROL GRID VOLTS	SCREEN GRID VOLTS
6A7	1st Det. Osc.	108	1.4	2.6**	54
6D6	I.F. Amp.	105	8.4	2.6	105
76	2nd Det.	36*	.05	8.2**	--
43	Pwr. Pentode	90	20.0	15.0**	97
2525	Rectifier	--	78. TOTAL	---	--

* These readings were taken with a 1,000 ohm per volt meter and are not indicative of effective voltages.

** Correct readings cannot be obtained at control grid due to series resistors. To be measured across each respective bias resistor.

VOLTAGES ACROSS ELECTROLYTIC CONDENSER (Part #20.49)
1st section 128
2nd section 112

DC RESISTANCE VALUES

		PRIMARY	SECONDARY
35.3	Antenna coil	23.0 ohms	4.7 ohms
35.8	Oscillator coil	1.75 "	6.1 "
7379	1st I.F. trans.	15.0 "	15.0 "
4336	2nd I.F. trans.	25.0 "	25.0 "
40.16C	Filter choke	400.0 "	
105.21	Speaker input audio trans.	340.0 "	.5 "
105.21	Speaker field	3000.0 "	
105.21	Speaker voice coil	3.0 "	

©John F. Rider, Publisher

FADA RADIO & ELECTRIC CORP.

MODEL 262
Schematic
Parts List

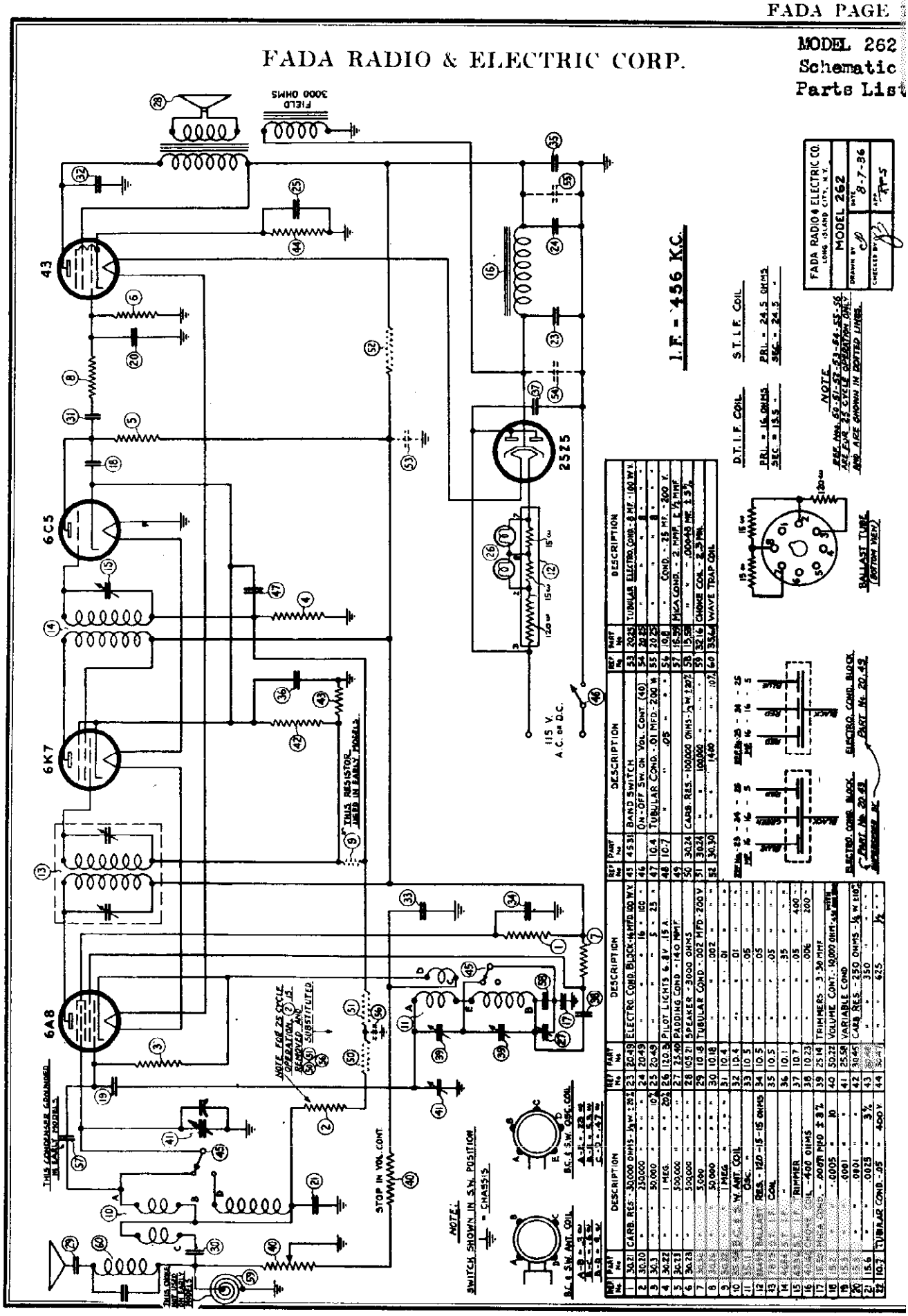

REF No.	PART No.	DESCRIPTION
1	30.21	CARB. RES. - 30,000 OHMS - ½ W. ± 5%
2	30.20	" " 250,000 " " " " "
3	30.3	" " 50,000 " " " " "
4	30.22	" " 1 MEG. " " " " "
5	30.23	" " 500,000 " " " " "
6	30.23	" " 500,000 " " " " "
7		" " 5,000 " " " " "
8		" " 50,000 " " " " "
9		1 MEG. " " " " "
10		B.C. & S.W. ANT. COIL
11		" " OSC. "
12		RES. - 120 - 15 - 15 OHMS
13		COIL
14		"
15		RHEOSTAT
16		COIL - 400 OHMS
17		CONDENSER - .0005 MFD ± 3%
18		" - .0001 " " "
19		" - .0001 " " "
20		" - .0025 " " "
21	15.6	TUBULAR COND. - .05 " 400 V
22	10.7	" " .002 " 200 V
23	20.48	ELECTRO. COND. BLOCK - 16 MFD 100 W.V.
24	20.49	" " " 16 " 100 " "
25	20.48	" " " 8 " 100 " "
26	120.3	PILOT LIGHTS 6.8 V. .15 A.
27	25.60	PADDING COND. - 140 MMF
28	105.21	SPEAKER - 3000 OHMS
29	10.8	TUBULAR COND. - .002 MFD. 200 V
30	10.18	" " .002 " " "
31	10.4	" " .01 " " "
32	10.4	" " .01 " " "
33	10.5	" " .05 " " "
34	10.5	" " .05 " " "
35	10.5	" " .05 " " "
36	10.1	" " .35 " " "
37	10.7	" " .05 " 400 "
38	10.23	" " .006 " 200 "
39	25.14	TRIMMERS - 3-30 MMF
40	30.22	VOLUME CONT. - 50,000 OHMS - ½ W. TAPER
41	25.58	VARIABLE COND
42	30.45	CARB. RES. - 250 OHMS - ½ W ± 10%
43	30.46	" " 350 " " " "
44	30.47	" " 625 " " " "
45	30.31	BAND SWITCH
46		ON-OFF SW. ON VOL CONT. (40)
47	10.4	TUBULAR COND. - .01 MFD - 200 W.
48	10.7	" " .05 " " "
49		
50	30.24	CARB. RES. - 100,000 OHMS - ½ W ± 20%
51	30.24	" " 100,000 " " " " "
52	30.30	" " 1,400 " " " " "
53	32.16	CHOKE COIL - 2.5 MH.
54	20.25	TUBULAR ELECTRO. COND. - 8 MF. - 100 W.V.
55	20.25	" " " 8 " " " "
56	20.25	" " " 8 " " " "
57	16.59	MICA COND. - 2 MMF ± ½ MMF
58	15.58	" " - .00045 MF ± 2½%
59	32.16	CHOKE COIL - 2.5 MH.
60	33.64	WAVE TRAP COIL

©John F. Rider, Publisher

MODELS 126,127,128
Chassis NK
Schematic

FADA RADIO & ELECTRIC CORP.

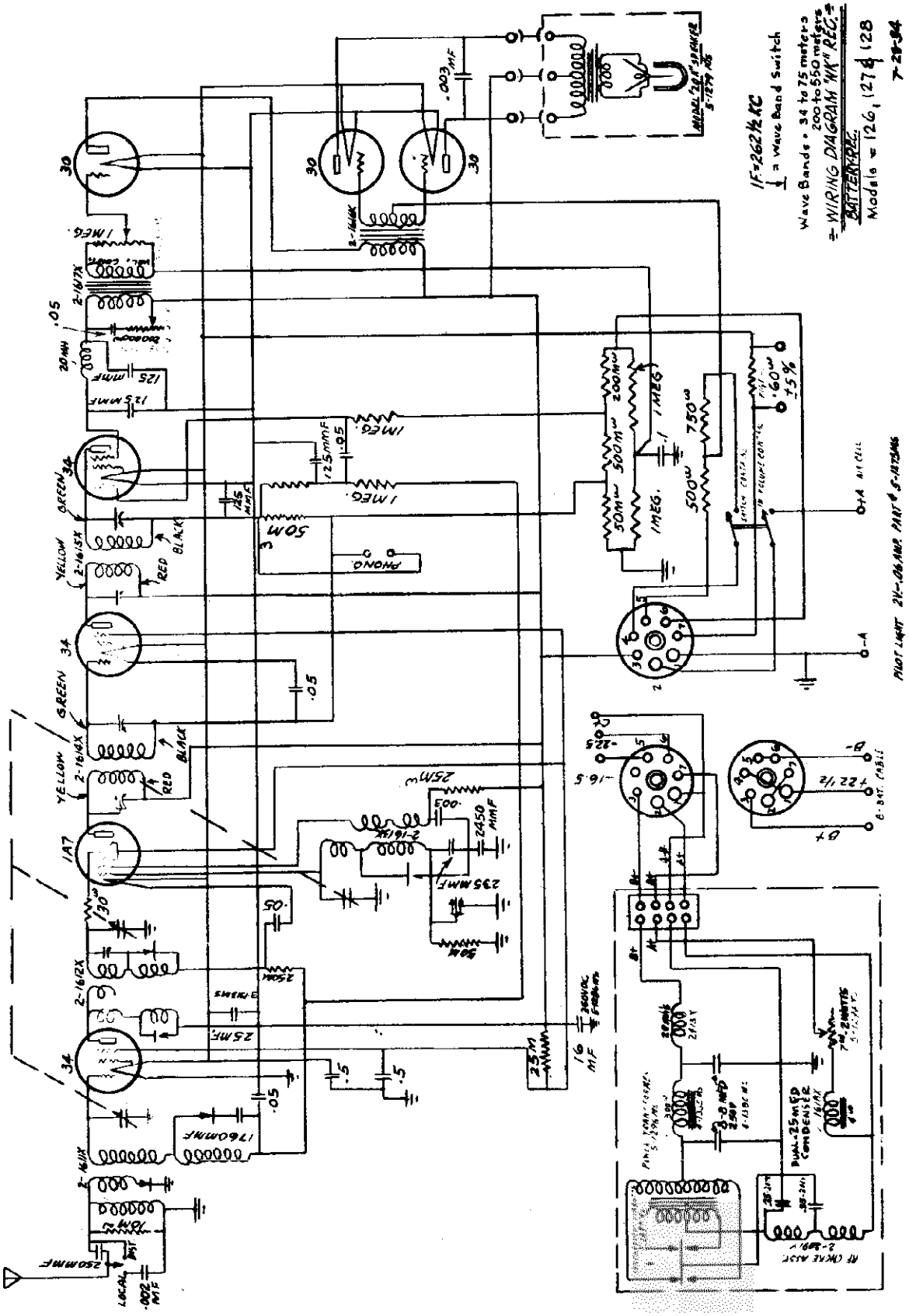

©John F. Rider, Publisher

FADA RADIO & ELECTRIC CORP.

MODEL 270
Schematic
Parts List

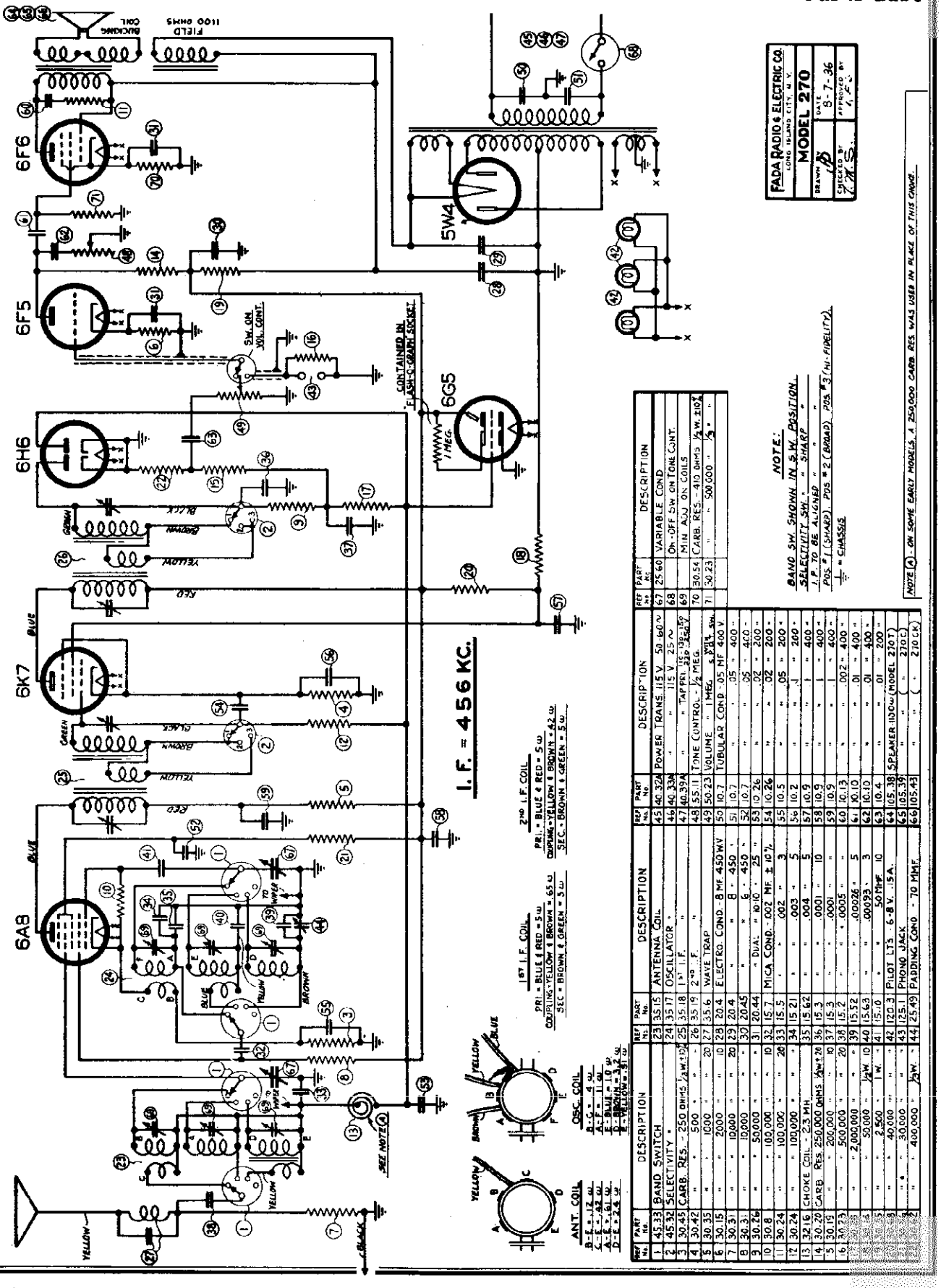

REF. No.	PART No.	DESCRIPTION
1	45.33	BAND SWITCH
2	45.32	SELECTIVITY "
3	30.45	CARB. RES. - 250 OHMS ½W ±10%
4	30.42	" " 500 " " "
5	30.35	" " 1000 " " "
6	30.15	" " 2000 " " "
7	30.31	" " 10,000 " " "
8	30.31	" " 10,000 " " "
9	30.26	" " 50,000 " " "
10	30.8	" " 100,000 " " "
11	30.24	" " 100,000 " " "
12	30.24	" " 100,000 " " "
13	32.16	CHOKE COIL - 2.3 MH.
14	30.20	CARB. RES. 250,000 OHMS ½W ±20%
15	30.19	" " 200,000 " " "
16	30.23	" " 500,000 " " "
17	30.23	" " 2,000,000 " " "
18	30.23	" " 50,000 " " "
19	30.23	" " 2,500 " 1W "
20	30.23	" " 40,000 " ½W "
21	30.23	" " 30,000 " " "
22	30.23	" " 400,000 " " "

REF. No.	PART No.	DESCRIPTION
23	35.15	ANTENNA COIL
24	35.17	OSCILLATOR "
25	35.18	1ST I.F. "
26	35.19	2ND I.F. "
27	35.6	WAVE TRAP
28	20.4	ELECTRO. COND. - 8 MF. 450 W.V.
29	20.4	" " 8 " 450 "
30	20.45	" " 6 " 450 "
31	20.44	" DUAL " .01Ω " 25 "
32	15.7	MICA COND. - .002 MF. ± 10%
33	15.5	" .002 " 3
34	15.21	" .003 " 5
35	15.62	" .004 " 5
36	15.3	" .0001 " 10
37	15.3	" .0001 "
38	15.2	" .0005 "
39	15.52	" .00026 " 5
40	15.63	" .00093 " 3
41	15.10	" 50 MMF. 10
42	120.3	PILOT LTS. 6-8 V. .15A.
43	125.1	PHONO JACK
44	25.49	PADDING COND. - 70 MMF.

REF. No.	PART No.	DESCRIPTION
45	40.32A	POWER TRANS. 115 V. 50-60 ~
46	40.33A	" " 115 V. 25 ~
47	40.39A	" " TAPPED 105-115-125-220-245 V.
48	55.11	TONE CONTROL - ½ MEG.
49	50.23	VOLUME " 1 MEG. S.P.S.T. SW.
50	10.7	TUBULAR COND. - .05 MF. 400 V.
51	10.7	" " " .05 " 400 "
52	10.7	" " " .05 " 400 "
53	10.26	" " " .02 " 200 "
54	10.26	" " " .02 " 200 "
55	10.5	" " " .05 " 200 "
56	10.2	" " " .1 " 200 "
57	10.9	" " " 1 " 400 "
58	10.9	" " " 1 " 400 "
59	10.9	" " " 1 " 400 "
60	10.13	" " " .002 " 400 "
61	10.10	" " " .01 " 400 "
62	10.10	" " " .01 " 400 "
63	10.4	" " " .01 " 200 "
64	05.38	SPEAKER 1100Ω (MODEL 270T)
65	05.39	" " " 210Ω
66	05.43	" " " 210Ω (K)

REF. No.	PART No.	DESCRIPTION
67	25.60	VARIABLE COND.
68		ON-OFF SW. ON TONE CONT.
69		MIN. ADJ. ON COILS
70	30.54	CARB. RES. - 410 OHMS ½W. ±10%
71	30.23	" 500,000 " ½ "

©John F. Rider, Publisher

MODEL 270
Alignment, Voltage
Socket, Trimmers

FADA RADIO & ELECTRIC CORP.

ALIGNING INSTRUCTIONS FOR MODEL 270 SERIES

In order to adjust accurately the various trimmer condensers of the receiver in accordance with the following instructions, it is essential to use a shielded signal generator capable of giving a modulated carrier which can be attenuated at 456 KC, 600 KC, 1500 KC, 2 MC, 5 MC, 6 MC and 15 MC.

This receiver is equipped with an automatic volume control which necessitates setting the manual volume control of the receiver to its maximum position to insure accuracy in alignment. To control the signal output of the receiver it will be necessary to use the attenuator control of the signal generator.

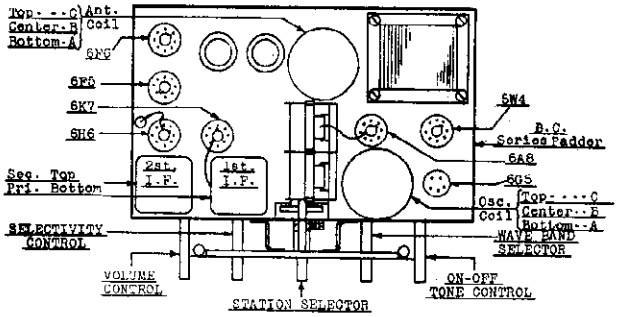

ADJUSTMENT OF I.F. CONDENSERS

The four (4) intermediate frequency (I.F.) condensers are located as shown in the sketch.

IMPORTANT: All adjustments must be made with the selectivity control in the "S" position.

1st - Disconnect the outside antenna system from the receiver.

2nd - Disconnect the control grid lead from the 6A8 tube.

3rd - Connect the high potential lead of the signal generator to the control grid of the 6A8 tube, and the low potential side to the receiver "ground" lead.

4th - Place an output meter (copper oxide type) across the speaker voice coil so that variations in signal output can be noted.

5th - Place the signal generator in operation and adjust the carrier frequency to 456 KC. Regulate the attenuator control of the signal generator so that the output signal is low enough to insure accuracy in adjusting the I.F. condensers.

6th - With the aid of a bakelite type screw driver, adjust the four (4) I.F. condensers to resonance; adjusting first the I.F. condenser across the secondary winding of the 2nd I.F. transformer and then each in turn, ending with the adjustment of the condenser across the primary winding of the 1st I.F. transformer.

ADJUSTMENT OF BAND "A" SHUNT COMPENSATORS

The compensators are located as indicated on the sketch.

1st - Remove the signal generator connection from the control grid of the 6A8 tube and replace the control grid lead.

2nd - Connect the antenna wire of the receiver chassis through a 400 ohm carbon resistor to the high potential side of the signal generator. The ground wire should remain connected to the signal generator.

3rd - Adjust the carrier frequency output of the signal generator to 15 MC.

4th - Turn the wave band selector switch to band "A" and set the calibrated dial of the receiver to read 15 MC.

5th - Adjust the "A" band oscillator shunt compensator for maximum signal output. If two peaks are noted on this adjustment, the proper one is that with the compensator farthest "in". To determine that this compensator has not been adjusted to the image frequency, turn the receiver dial to approximately 15.9 MC. If no signal can be heard at this setting even with a greater signal generator output, the compensator has been improperly adjusted and it will be necessary to re-adjust to the proper peak. After re-adjusting check to see that the image frequency comes in at 15.9 MC. It is well to bear in mind throughout these adjustments that with the same signal input to the receiver, the image response point should be weaker than the original signal frequency output reading.

6th - Having determined the correct peak, and maximum setting, for the "A" band shunt compensator, adjust the antenna band "A" shunt compensator for maximum output.

7th - Adjust the carrier frequency output of the signal generator to 6 MC. Rotate the station selector to pick up this 6 MC signal and check for calibration and sensitivity.

ADJUSTMENT OF BAND "B" SHUNT COMPENSATOR

The compensators are located as indicated in the sketch.

1st - Turn the wave band selector switch to band "B".

2nd - Adjust the carrier frequency output of the signal generator to 5 MC.

3rd - Turn the receiver dial to read 5 MC.

4th - Adjust the band "B" oscillator shunt compensator for maximum signal output. If two peaks are noted on this adjustment, the proper one is that with the compensator furthest "out". To determine that this compensator has not been adjusted to the image frequency, turn the receiver dial to approximately 4 MC. If no signal is heard at this setting, even with a greater signal generator output, the compensator has been improperly adjusted and it will be necessary to re-adjust to the proper peak. After re-adjusting check to see that the image frequency comes in at 4 MC.

5th - Having determined the correct peak and maximum setting for the band "B" oscillator shunt compensator, adjust the antenna shunt compensator for maximum output.

6th - Adjust the carrier frequency output of the signal generator to 2 MC. Rotate the station selector to pick up this 2 MC signal and check for calibration and sensitivity.

ADJUSTMENT OF BAND "C" SHUNT COMPENSATOR

The compensators are located as indicated in the sketch.

1st - Remove the 400 ohm resistor from the high potential side of the signal generator and insert a 250 mmfd. mica condenser in its place.

2nd - Turn the wave band selector switch to band "C".

3rd - Adjust the carrier frequency to 1500 KC.

4th - Set the calibrated dial of the receiver to read 1500 KC.

5th - Adjust the band "C" oscillator shunt compensator for maximum signal output.

6th - Adjust band "C" antenna shunt compensator for maximum signal output.

ADJUSTMENT OF BAND "C" OSCILLATOR SERIES TRIMMER

1st - Adjust the carrier frequency output of the signal generator to 600 KC.

2nd - Turn the calibrated dial of the receiver to pick up this 600 KC signal.

3rd - With the aid of a bakelite type screw driver, adjust band "C" oscillator series trimmer (see sketch) until a maximum signal is indicated on the output meter. To insure perfect alignment it is necessary to "rock" the ganged variable condenser in order to follow the maximum signal output.

4th - Having determined the maximum peak of band "C" oscillator series trimmer, re-adjust the carrier frequency of the signal generator to 1500 KC. Turn the calibrated dial to 1500 KC and re-adjust band "C" oscillator shunt compensator, and then, antenna shunt compensator for maximum signal output as outlined in the foregoing instructions.

CONTINUITY AND VOLTAGE READINGS ON

MODEL 270 SERIES

Line Voltage 118 A.C. - Input Current .6 Amp.

(No signal input)

TYPE OF TUBE	POSITION OF TUBE	PLATE VOLTS	PLATE MA CURRENT	CATHODE VOLTS	SCREEN GRID VOLTS
6A8	1st Detector Oscillator	225	4.2	2.8	114
		183	3.4	---	---
6K7	Int. Freq.	230	5.4	3.5	98
6H6	2nd Detector A.V.C.	---	---	---	---
		---	---	---	---
6P5	1st Audio	99	.5	.9	---
6P6	2nd Audio	242	40.	17.9	272
6G5	Flash-o-graph	232	1.2	---	---
5W4	Rectifier	---	67.0 TOTAL	---	---

These readings were taken with a 1,000 ohm per volt meter and are not indicative of effective voltages.

Above readings taken with a 105.39 speaker in circuit.

VOLTAGE ACROSS ELECTROLYTIC CONDENSERS

1st - 370 2nd - 290

Voltage across speaker field			80 volts
" "	2,500 ohm resistor	(#30.55)	58 "
" "	40,000 " "	(#30.68)	133 "
" "	50,000 " "	(#30.14)	97 "

SPEAKER D.C. RESISTANCE VALUES

PART NO.	FIELD COIL	AUDIO TRANS. PRI.	AUDIO TRANS. SEC.	V.C.
105.38	1,100*	500*	.8**	3.0
105.39	1,100*	700*	1.0**	2.8
105.43	1,100*	400*	1.0**	6.5

* These are cold D.C. resistance values.

** This reading includes resistance of hum bucking coil.

©. ...n F. ...der, Publisher

©John F. Rider, Publisher

FADA RADIO & ELECTRIC CORP.

MODEL 271 Schematic Parts List

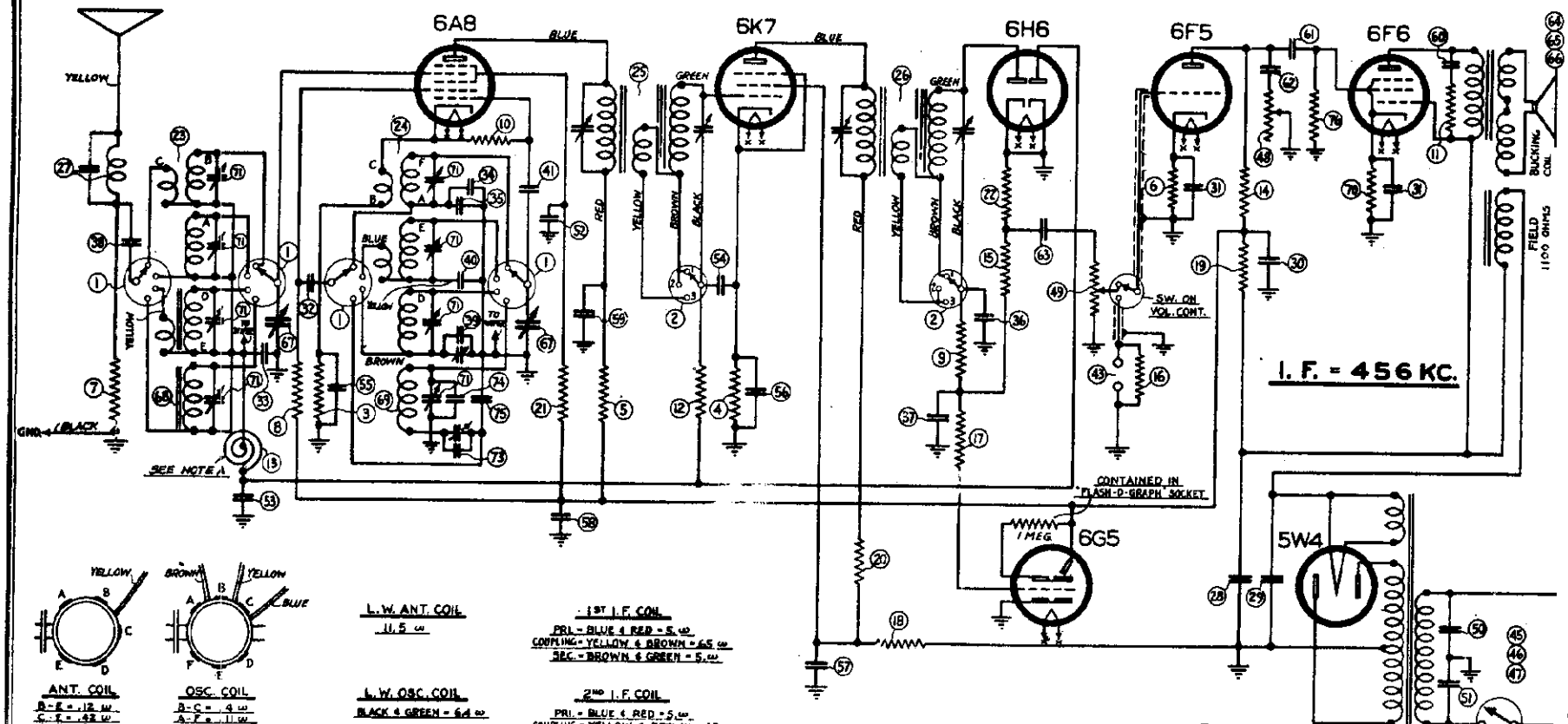

ANT. COIL
B-E = .12 ω
C-E = .42 ω
A-E = .61 ω
D-E = 2.4 ω

OSC. COIL
B-C = .4 ω
A-E = 1.1 ω
F-BLUE = 1.0 ω
D-BROWN = 3.2 ω
E-YELLOW = .61 ω

L.W. ANT. COIL
11.5 ω

L.W. OSC. COIL
BLACK & GREEN = 6.4 ω

1ST I.F. COIL
PRI. - BLUE & RED = 5. ω
COUPLING - YELLOW & BROWN = 65 ω
SEC. - BROWN & GREEN = 5. ω

2ND I.F. COIL
PRI. - BLUE & RED = 5. ω
COUPLING - YELLOW & BROWN = 47 ω
SEC. - BROWN & GREEN = 5. ω

REF. No.	PART No.	DESCRIPTION
1	45.33	BAND SWITCH
2	45.32	SELECTIVITY "
3	30.45	CARB. RES. - 250 OHMS 1/2W. ±10%
4	30.42	" " 500 " " "
5	30.35	" " 1000 " " 20
6	30.15	" " 2000 " " 10
7	30.31	" " 10,000 " " 20
8	30.31	" " 10,000 " " "
9	30.26	" " 50,000 " " "
10	30.8	" " 100,000 " " 10
11	30.24	" " 250,000 " " 20
12	30.24	" " 250,000 " " "
13	32.16	CHOKE COIL - 2.3 MH.
14	30.20	CARB. RES. - 500,000 OHMS 1/2 WATT 20
15	30.19	" " 500,000 " " 10
16	30.23	" " 1,000,000 " " 20
17	30.28	" " 2,000,000 " " "
18	30.14	" " 3,000,000 " 1/2W. 10
19	30.55	" " 500 " 1 W. "
20	30.68	" " 3,000 " " "
21	30.56	" " 1,000 " " "
22	30.62	" " 1,000 " 1/2W. "
23	35.15	ANTENNA COIL
24	35.17	OSCILLATOR "
25	35.18	1ST I.F. "
26	35.19	2ND I.F. "
27	35.6	WAVE TRAP
28	20.4	ELECTRO. COND. - 8 MF. 450 W.V.
29	20.4	" " 8 " 450 "
30	20.45	" " 6 " 450 "
31	20.44	" DUAL " 10-10 " 25 "
32	15.7	MICA COND. - .002 MF. ± 10%
33	15.5	" " .002 " 3
34	15.21	" " .003 " 5
35	15.62	" " .004 " 5
36	15.3	" " .0001 " 10
37	15.3	" " .0001 " "
38	15.2	" " .0005 " 20
39	15.52	" " .00026 " 5
40	15.63	" " .00023 " 3
41	15.10	" " .[illegible] MMF 10
42	120.3	PILO[illegible] 15A.
43	125.1	PHO[illegible]
44	25.49	[illegible]
45	40.32A	POWER TRANS. 115 V. 50-60 ~
46	40.33A	" " 115 V. 25 ~
47	40.39A	" " TAP PRI. - 105-115-125-150 SEC. 5.5 V.
48	55.11	TONE CONTROL - 1/2 MEG.
49	50.23	VOLUME - 1 MEG. WITH S.P.S.T. SW.
50	10.7	TUBULAR COND. .05 MF. 400 V.
51	10.7	" " .05 " 400 "
52	10.7	" " .05 " 400 "
53	10.26	" " .02 " 200 "
54	10.26	" " .02 " 200 "
55	10.5	" " .05 " 200 "
56	10.2	" " 1 " 200 "
57	10.9	" " 1 " 400 "
58	10.9	" " 1 " 400 "
59	10.9	" " 1 " 400 "
60	10.13	" " .002 " 400 "
61	10.10	" " .01 " 400 "
62	10.10	" " .01 " 400 "
63	10.4	" " .01 " 200 "
64	105.38	" " (MODEL 270T)
65	105.39	" " (" 270C)
66	105.43	" " (" 270CK)
67	25.60	VARIABLE COND.
68	35.20	L. W. ANT. COIL
69	35.23	" OSC. "
70		ON-OFF SW. ON TONE CONT.
71		MIN. ADJ. ON COILS
72	30.54	CARB. RES. - 410 OHMS 1/2 W. ± 10%
73	15.58	MICA COND. - .00018 MF. ±5%
74	15.10	" " 50 MMF 10
75	15.2	" " .0005 MF. "
76	30.23	CARB. RES. - 500,000 OHMS 1/2W. ±20%

NOTE:
BAND SW. SHOWN IN S.W. POSITION
SELECTIVITY SW. " " SHARP "
I.F. TO BE ALIGNED " " "
POS. #1 (SHARP). POS. #2 (BROAD). POS #3 (HI-FIDELITY).
⏚ = CHASSIS

NOTE A - ON SOME EARLY MODELS, A 250,000 CARB. RES. WAS USED IN PLACE OF THIS CHOKE.

FADA RADIO & ELECTRIC CO.
LONG ISLAND CITY, N. Y.
MODEL 271

DRAWN BY	DATE
JD	8-7-36
CHECKED BY F.M.S.	APPROVED BY RFS

MODEL 272
Schematic
Parts List

FADA RADIO & ELECTRIC CORP.

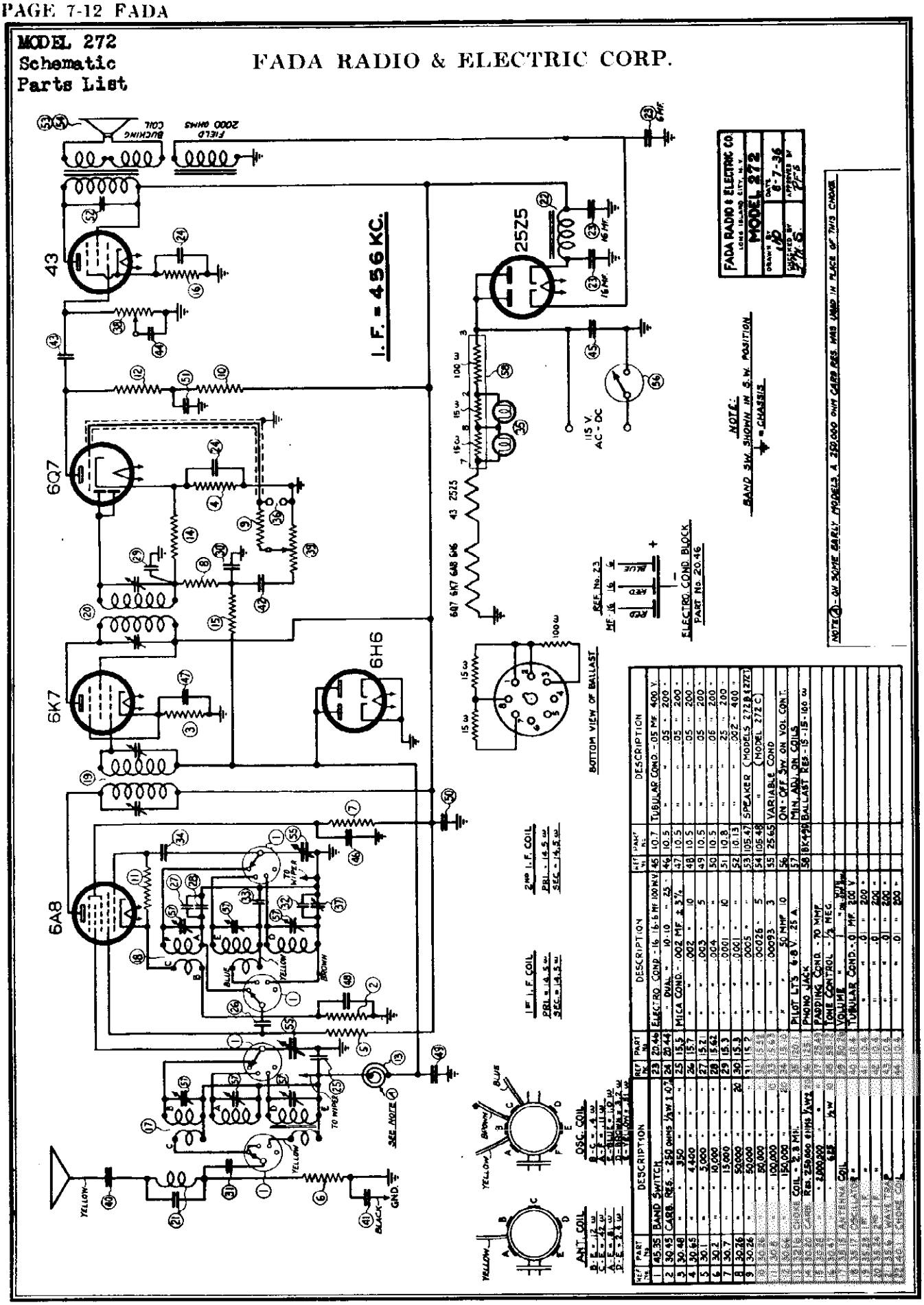

REF No.	PART No.	DESCRIPTION
1	45.35	BAND SWITCH
2	30.45	CARB. RES. - 250 OHMS 1/4W 10%
3	30.40	" " 350 " " " "
4	30.65	" " 4,600 " " " "
5	30.1	" " 5,000 " " " "
6	30.2	" " 10,000 " " " "
7	30.7	" " 13,000 " " " "
8	30.26	" " 50,000 " " " "
9	30.26	" " 50,000 " " " "
10	30.26	" " 80,000 " " " "
11	30.26	" " 100,000 " " " "
12	30.26	" " 150,000 " " " "
13	30.31	CHOKE COIL - 2.3 MH.
14	30.30	CARB. RES. 250,000 OHMS 1/4W
15	30.26	" 2,000,000 " " " "
16	30.26	" 6.8 " 1W
17	30.31	ANTENNA COIL
18	30.31	OSCILLATOR "
19	30.31	1ST I.F. "
20	30.31	2ND I.F. "
21	30.31	WAVE TRAP "
22	30.31	CHOKE COIL

REF No.	PART No.	DESCRIPTION
23	20.46	ELECTRO COND. - 16-16 MF 100 M.V.
24	20.44	" DUAL " 10-10 " 25 "
25	15.5	MICA COND. - .002 MF. ± 3%
26	15.7	" " .002 " 10
27	15.21	" " .003 " 5
28	15.62	" " .004 " "
29	15.3	" " .0001 " 10
30	15.3	" " .0001 " "
31	15.2	" " .0005 " "
32	15.5	" " .00026 " 5
33	15.63	" " .00093 " 3
34	15.5	" 150 MMF 10
35	20.1	PILOT LTS 6.8 V. .25 A.
36	20.1	PHONO JACK
37	30.30	PADDING COND. - 70 MMF
38	30.30	TONE CONTROL - 1/2 MEG.
39	30.30	VOLUME " 1 "
40	30.30	TUBULAR COND. - 0.1 MF 200 V.
41		" " .0 " 200 "
42		" " .0 " 200 "
43		" " .0 " 200 "
44		" " .01 " 200 "
45	10.7	TUBULAR COND. - .05 MF 400 V.
46	10.5	" " .05 " 200 "
47	10.5	" " .05 " 200 "
48	10.5	" " .05 " 200 "
49	10.5	" " .05 " 200 "
50	10.5	" " .05 " 200 "
51	10.8	" " .25 " 200 "
52	10.13	" " .002 - 400 "
53	105.47	SPEAKER (MODELS 272 & 272T)
54	105.48	" (MODEL 272 C)
55	25.65	VARIABLE COND
56		ON - OFF SW. ON VOL CONT.
57		MIN. ADJ. ON COILS
58	BK-498	BALLAST RES - 15 - 15 - 100 Ω

NOTE (1) - ON SOME EARLY MODELS A 250,000 OHM CARB RES. WAS USED IN PLACE OF THIS CHOKE

©John F. Rider, Publisher

FADA RADIO & ELECTRIC CORP.

MODEL 275
Schematic
Parts Lis

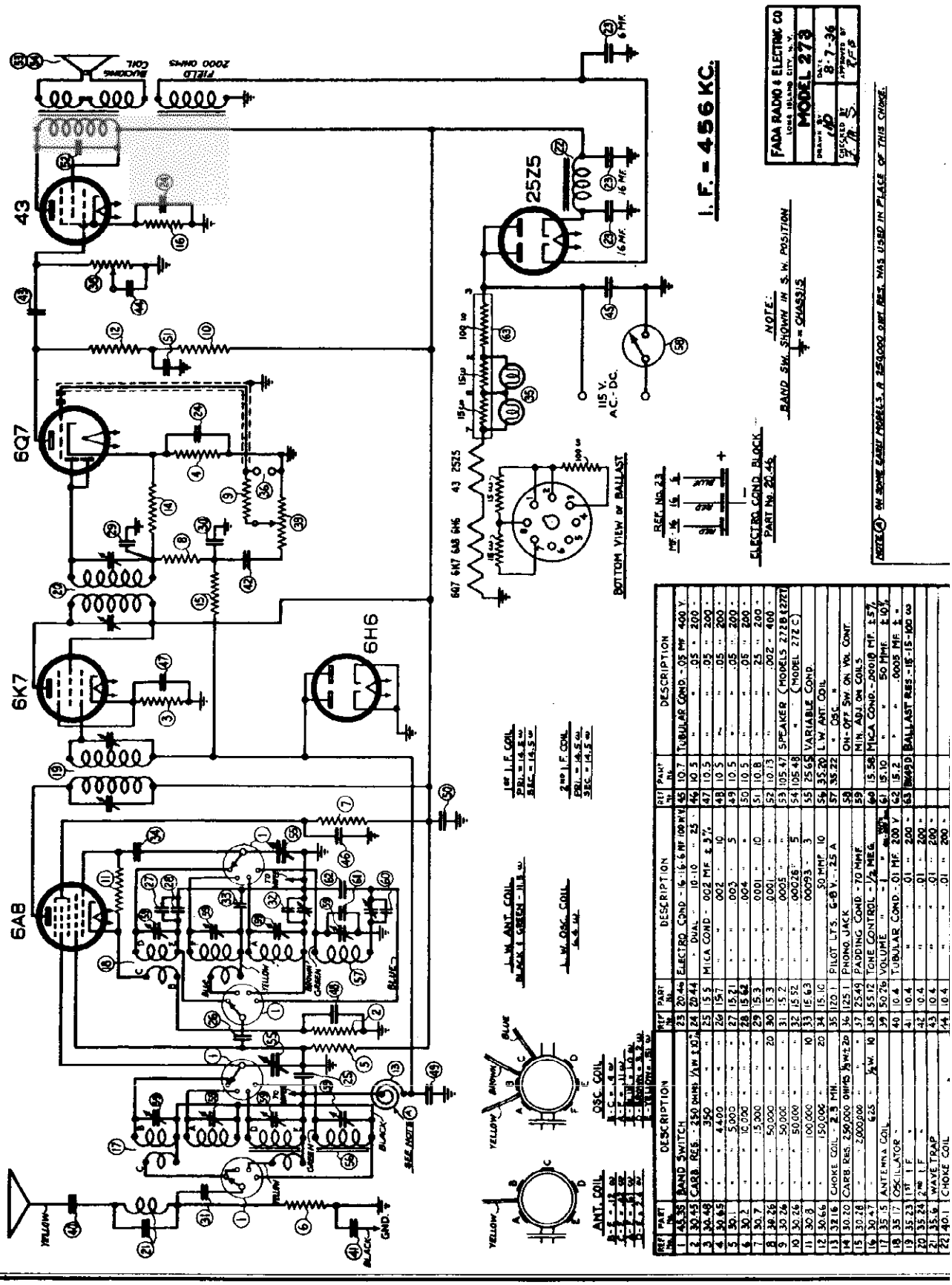

REF No.	PART No.	DESCRIPTION
1	45.35	BAND SWITCH
2	30.45	CARB. RES. 250 OHMS 1/2 W ± 10%
3	30.48	" " 350 " " " "
4	30.65	" " 4,400 " " " "
5	30.1	" " 5,000 " " " "
6	30.2	" " 10,000 " " " "
7	30.7	" " 15,000 " " " "
8	30.26	" " 50,000 " " " "
9	30.26	" " 50,000 " " " "
10	30.26	" " 50,000 " " " "
11	30.8	" " 100,000 " " " "
12	30.66	" " 150,000 " " " "
13	32.16	CHOKE COIL - 2.9 MH.
14	30.20	CARB. RES. 250,000 OHMS 1/2 W ± 20%
15	30.28	" " 2,000,000 " " " "
16	30.47	" " 625 " 1 W. 10%
17	35.15	ANTENNA COIL
18	35.17	OSCILLATOR
19	35.23	1ST I.F. "
20	35.24	2ND I.F. "
21	35.9	WAVE TRAP
22	40.1	CHOKE COIL
23	20.44	ELECTRO COND. - 16-16-6 MF 100 W.V.
24	20.44	" DUAL 10-10 " 25 "
25	15.5	MICA COND. - .002 MF ± 3%
26	15.7	" " .002 " " 10 "
27	15.21	" " .003 " " 5 "
28	15.62	" " .004 " " " "
29	15.3	" " .0001 " " 10 "
30	15.3	" " .0001 " " " "
31	15.2	" " .0005 " " " "
32	15.52	" " .00028 " 5 "
33	15.63	" " .00093 " 3 "
34	15.10	" " .50 MMF. 10 "
35	120.1	PILOT LTS. 6-8 V. .25 A
36	125.1	PHONO JACK
37	25.49	PADDING COND. - 70 MMF.
38	55.12	TONE CONTROL - 1/2 MEG.
39	50.26	VOLUME " - 1 " "
40	10.4	TUBULAR COND. - .01 MF. 200 V.
41	10.4	" " .01 " 200 "
42	10.4	" " .01 " 200 "
43	10.4	" " .01 " 200 "
44	10.4	" " .01 " 200 "
45	10.7	TUBULAR COND. - .05 MF 400 V.
46	10.5	" " .05 " 200 "
47	10.5	" " .05 " 200 "
48	10.5	" " .05 " 200 "
49	10.5	" " .05 " 200 "
50	10.5	" " .05 " 200 "
51	10.8	" " .25 " 200 "
52	10.13	" " .002 " 400 "
53	105.47	SPEAKER (MODELS 272B & 272T)
54	105.48	" " (MODEL 272C)
55	25.65	VARIABLE COND.
56	35.20	L.W. ANT. COIL
57	35.22	" OSC. "
58		ON-OFF SW. ON VOL. CONT.
59		MIN. ADJ. ON COILS
60	15.58	MICA COND. - .0001 MF. ± 5%
61	15.10	" " 50 MMF. ± 10%
62	15.2	" " .0005 MF. ± "
63	BM49	BALLAST RES. - 15-15-100 Ω

NOTE: ON SOME EARLY MODELS A .25 OHM RES. WAS USED IN PLACE OF THIS CHOKE.

©John F. Rider, Publisher

MODEL 280
Schematic
Parts List

FADA RADIO & ELECTRIC CORP.

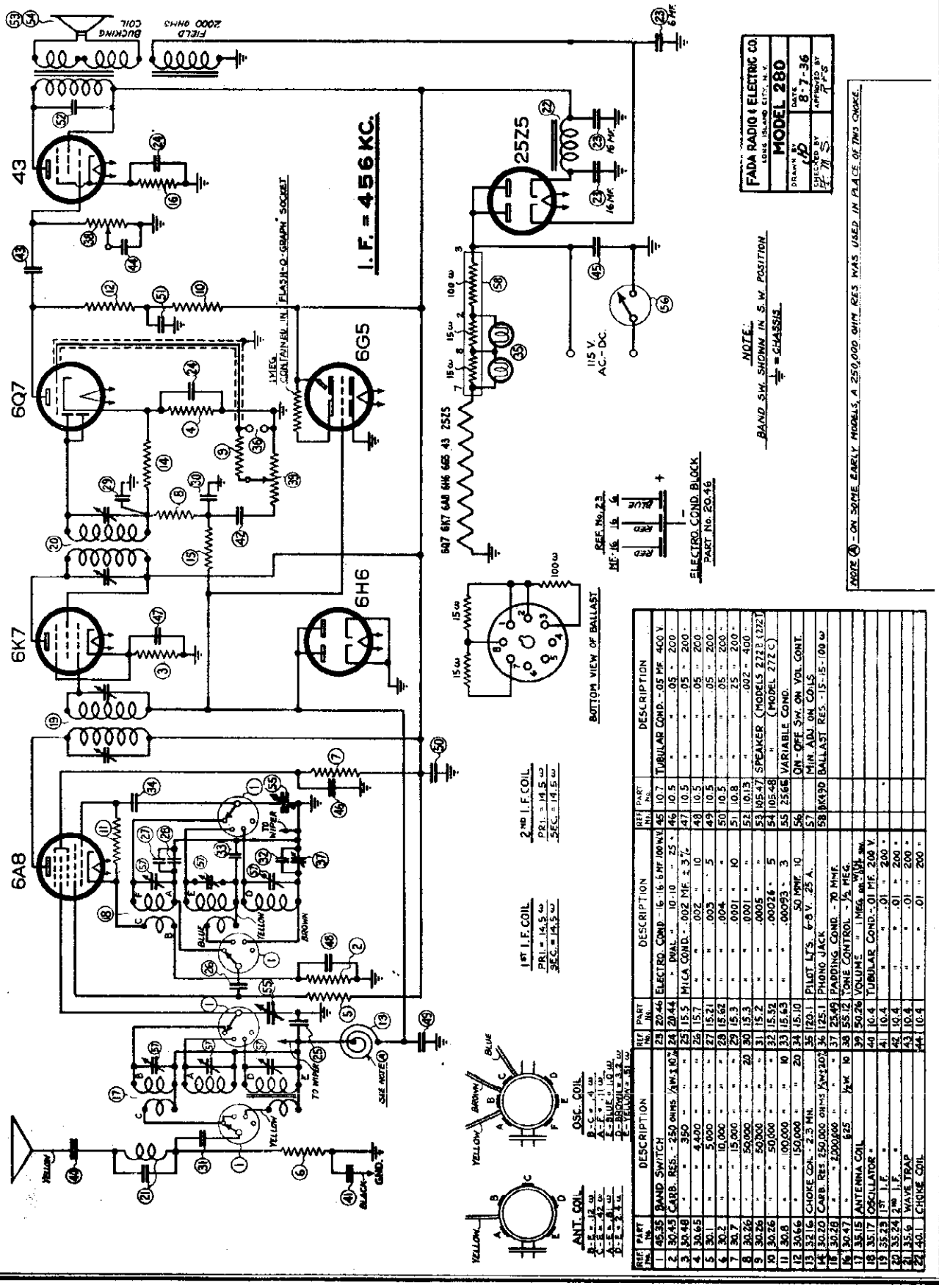

RES. No.	PART No.	DESCRIPTION	REF No.	PART No.	DESCRIPTION
1	45.35	BAND SWITCH	23	20.46	ELECTRO. COND. - 16-16 MF 100 V.W.
2	30.45	CARB. RES. - 250 OHMS 1/4 W. ± 10%	24	20.44	" DUAL " 10-10 " 25 "
3	30.48	" 350 " " "	25	15.5	MICA COND. - .002 MF. ± 3%
4	30.65	" 4,400 " " "	26	15.7	" " .002 " 10
5	30.1	" 5,000 " " "	27	15.21	" " .003 " 5
6	30.2	" 10,000 " " "	28	15.62	" " .004 " "
7	30.7	" 15,000 " " "	29	15.3	" " .0001 " 10
8	30.26	" 50,000 " " "	30	15.3	" " .0001 " "
9	30.26	" 50,000 " " "	31	15.2	" " .0005 " "
10	30.26	" 50,000 " " "	32	15.52	" " .00026 " 5
11	30.8	" 100,000 " " " 10	33	15.63	" " .00093 " 3
12	30.66	" 150,000 " " " 20	34	15.10	50 MMF. 10
13	32.16	CHOKE COIL - 2.3 MH.	35	120.1	PILOT LT'S. 6-8 V. .25 A.
14	30.20	CARB. RES. 250,000 OHMS 1/4 W. 20%	36	125.1	PHONO JACK
15	30.28	" 2,000,000 " " "	37	25.49	PADDING COND. - 70 MMF.
16	30.47	" 625 " 1/4 W. 10	38	55.12	TONE CONTROL - 1/2 MEG.
17	35.15	ANTENNA COIL	39	50.26	VOLUME " 1 MEG. WITH SW.
18	35.17	OSCILLATOR "	40	10.4	TUBULAR COND. - .01 MF. 200 V.
19	35.23	1ST I.F. "	41	10.4	" " " " "
20	35.24	2ND I.F. "	42	10.4	" " .01 " 200 "
21	35.9	WAVE TRAP	43	10.4	" " .01 " 200 "
22	40.1	CHOKE COIL	44	10.4	" " .01 " 200 "

REF No.	PART No.	DESCRIPTION
45	10.7	TUBULAR COND. - .05 MF. 400 V.
46	10.5	" " .05 " 200 "
47	10.5	" " .05 " 200 "
48	10.5	" " .05 " 200 "
49	10.5	" " .05 " 200 "
50	10.5	" " .05 " 200 "
51	10.8	" " .25 " 200 "
52	10.13	" " .002 - 400 "
53	105.47	SPEAKER (MODELS 222 & 222T
54	105.48	" (MODEL 272 C)
55	25.66	VARIABLE COND.
56		ON-OFF SW. ON VOL CONT.
57		MIN. ADJ. ON COILS
58	BK19D	BALLAST RES. - 15-15-100 Ω

©John F. Rider, Publisher

©John F. Rider, Publisher

FADA RADIO & ELECTRIC CORP.

MODEL 281 Schematic Parts List

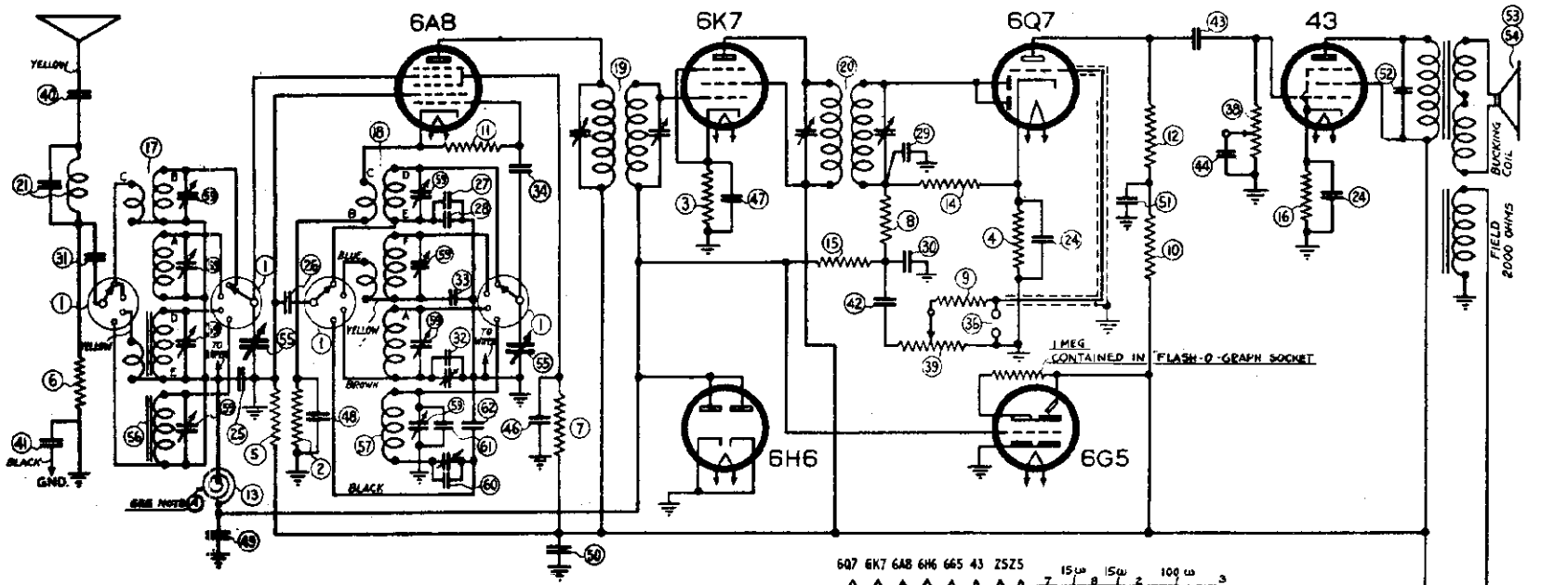

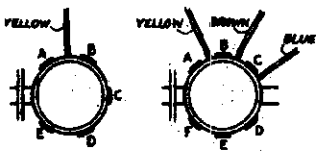

L. W. ANT. COIL
BLACK & GREEN - 11.5 Ω

L. W. OSC. COIL
6.4 Ω

1ST I. F. COIL
PRI. = 14.6 Ω
SEC. = 14.5 Ω

2ND I. F. COIL
PRI. = 14.5 Ω
SEC. = 14.5 Ω

REF. No. 23
MF - 16 16 6
RED RED BLUE
ELECTRO COND. BLOCK
PART No. 20.46

I. F. = 456 KC.

NOTE:
BAND SW. SHOWN IN S. W. POSITION
⏚ = CHASSIS

REF No.	PART No.	DESCRIPTION	REF No.	PART No.	DESCRIPTION	REF No.	PART No.	DESCRIPTION
1	45.35	BAND SWITCH	23	20.46	ELECTRO COND. - 16-16-6 MF 100 W.V.	45	10.7	TUBULAR COND. - .05 MF 400 V.
2	30.45	CARB. RES. - 250 OHMS ½ W. ± 10%	24	20.44	" DUAL " 10-10 " 25 "	46	10.5	" " " .05 " 200 "
3	30.48	" " 350 " " "	25	15.5	MICA COND. - .002 MF. ± 3%	47	10.5	" " " .05 " 200 "
4	30.65	" " 4,400 " " "	26	15.7	" " .002 " 10	48	10.5	" " " .05 " 200 "
5	30.7	" " 5,000 " " "	27	15.21	" " .003 " 5	49	10.5	" " " .05 " 200 "
6	30.7	" " 10,000 " " "	28	15.62	" " .004 " "	50	10.5	" " " .05 " 200 "
7	30.7	" " 15,000 " " "	29	15.3	" " .0001 " 10	51	10.8	" " " .25 " 200 "
8	30.46	" " 50,000 " " 20	30	15.3	" " .0001 " "	52	10.13	" " " .002 " 400 "
9	30.46	" " 50,000 " " "	31	15.2	" " .0005 " "	53	105.47	SPEAKER (MODELS 272B & 272)
10	30.46	" " 50,000 " " "	32	15.52	" " .00026 " 5	54	105.48	" (MODEL 272 C)
11	30.6	" " 100,000 " " 10	33	15.63	" " .00093 " 3	55	25.63	VARIABLE COND.
12	30.46	" " 150,000 " " 20	34	15.10	50 MMF. 10	56	35.20	L. W. ANT. COIL
13	32.6	CHOKE COIL - 2.3 MH.	35	120.1	PILOT LTS. 6-8 V. .25 A	57	35.22	" OSC. "
14	30.20	CARB. RES. 250,000 OHMS ½ W. ± 20%	36	125.1	PHONO JACK	58		ON-OFF SW. ON VOL CONT
15	30.28	" 2,000,000 " " "	37	25.49	PADDING COND. - 70 MMF.	59		MIN. ADJ. ON COILS
16	30.47	" 625 " ½ W 10	38	55.12	TONE CONTROL - ½ MEG.	60	15.58	MICA COND. - .00018 MF. ± 5%
17	35.15	ANTENNA COIL	39	50.76	VOLUME " 1 MEG. ON-OFF SW. WITH	61	15.10	" " 50 MMF. ± 10%
18	35.17	OSCILLATOR "	40	10.4	TUBULAR COND. - .01 MF. 200 V.	62	15.2	" " .0005 MF. ± "
19	35.13	1ST I.F. "	41	10.4	" " .01 " 200 "	63	BK499	BALLAST RES. - 15-15-100 Ω
20	35.24	2ND I.F. "	42	10.4	" " .01 " 200 "			
21	35.5	WAVE TRAP	43	10.4	" " .01 " 200 "			
22	35.1	CHOKE COIL	44	10.4	" " .01 " 200 "			

NOTE (A) - ON SOME EARLY MODELS, A 250,000 OHM RES. WAS USED IN PLACE OF THIS CHOKE.

FADA RADIO & ELECTRIC CO. LONG ISLAND CITY, N. Y.	
MODEL 281	
DRAWN BY JD	DATE 8-7-36
CHECKED BY F.M.S.	APPROVED BY FFR

MODEL 290
Schematic,
Voltage
Parts List

FADA RADIO & ELECTRIC CORP.

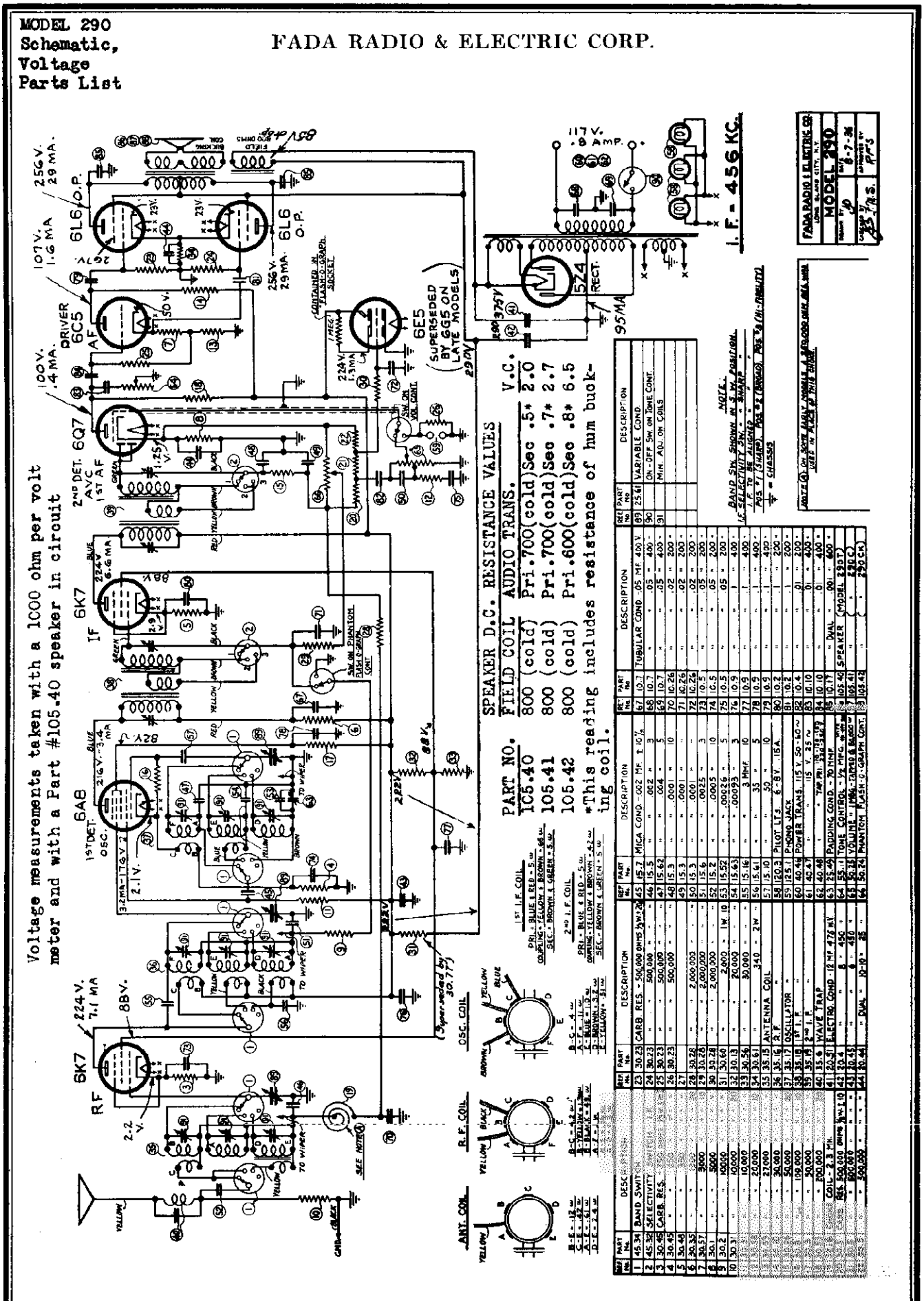

©John F. Rider Publisher

©John F. Rider, Publisher

FADA RADIO & ELECTRIC CORP.

MODEL 291 Schematic & Parts List

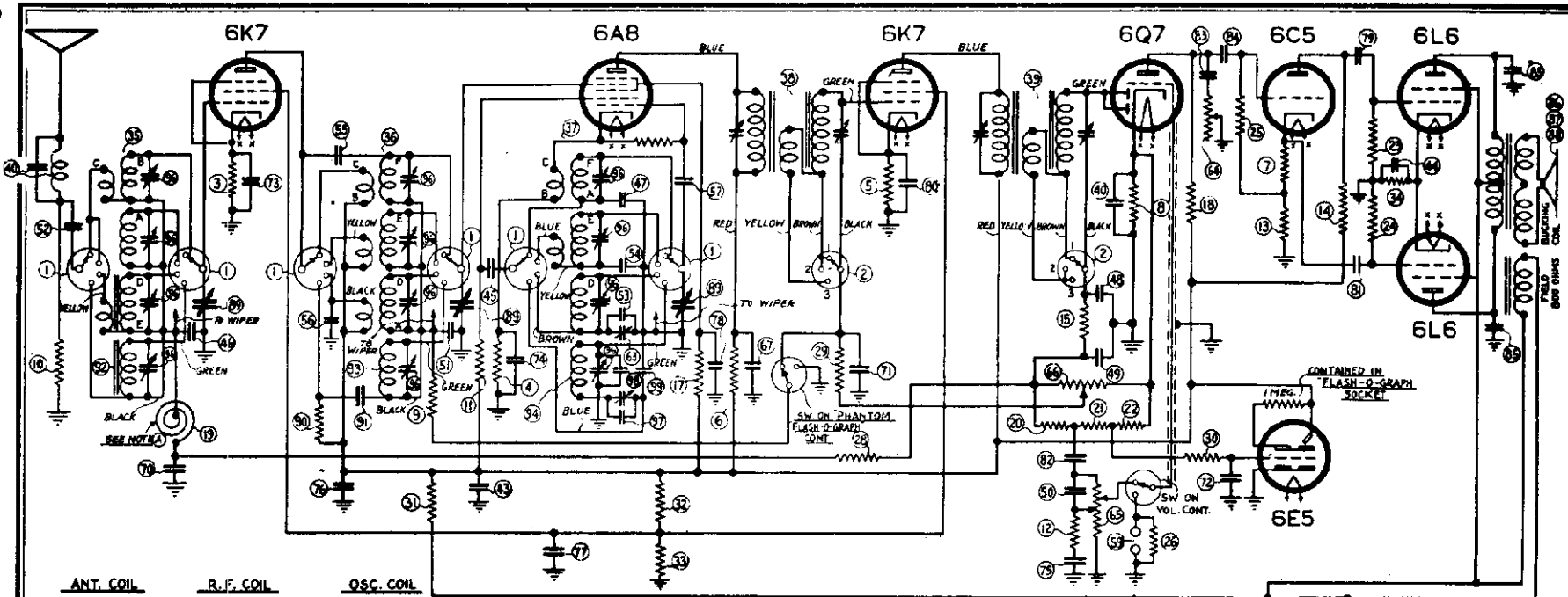

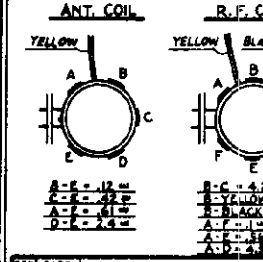

L.W. ANT. COIL
11.5 MH

L.W. OSC. COIL
BLACK & GREEN = 6.4 MH

L.W.R.F. COIL
22.0 MH

1ST I.F. COIL
PRI. = BLUE & RED = 5. MH
COUPLING = YELLOW & BROWN = .45 MH
SEC. = BROWN & GREEN = 5. MH

2ND I.F. COIL
PRI. = BLUE & RED = 5. MH
COUPLING = YELLOW & BROWN = .42 MH
SEC. = BROWN & GREEN = 5. MH

NOTE:
BAND SW. SHOWN IN S.W. POSITION.
I.F. SELECTIVITY SW. SHOWN IN SHARP POS.
I.F. TO BE ALIGNED IN SHARP POS.
POS. #1 (SHARP)
POS. #2 (BROAD)
POS. #3 (HI FIDELITY)
⏚ = CHASSIS

REF No.	PART No.	DESCRIPTION
1	45.34	BAND SWITCH
2	45.32	SELECTIVITY SWITCH
3	30.45	CARB. RES. 2,000,000 OHMS 1/2W ± 10
4	30.45	" " 2,000,000 " " "
5	30.46	" " 500,000 " " "
6	30.35	" " 1,000,000 " " "
7	30.	" " 50,000 " " "
8	30.	" " 100,000 " " "
9	30.	" " 1,000,000 " " "
10	30.	" " 2,000,000 " " "
11	30.	" " 1,000,000 " " "
12	30.	" " 2,000,000 " " "
13	30.	" " 1,000,000 " " "
14	30.	" " 2,000,000 " " "
15	30.	" " 50,000 " " "
16	30.	" " 100,000 " " "
17	30.	" " 2,000,000 " " "
18	30.53	" " 250,000 " " "
19	32.16	CHOKE COIL - 2.3 MH.
20	30.5	CARB. RES. 500,000 OHMS 1/2W ± 10
21	30.5	" " 500,000 " " "
22	30.23	" " 200,000 " " "
23	30.23	CARB. RES. - 200,000 OHMS 1/2W ± 10
24	30.23	" " 200,000 " " "
25	30.23	" " 200,000 " " "
26	30.23	" " 200,000 " " "
27		
28	30.28	" " 2,000,000 " " "
29	30.28	" " 2,000,000 " " "
30	30.28	" " 2,000,000 " " "
31	30.60	" " 2,000,000 " " "
32	30.13	" " 2,000,000 " " "
33	30.56	" " 25,000 " " "
34	30.61	" " 250,000 " " "
35	35.5	ANTENNA COIL
36	35.16	R.F.
37	35.17	OSCILLATOR
38	35.18	1ST I.F.
39	35.19	2ND I.F.
40	35.6	WAVE TRAP
41	20.51	ELECTRO COND. 12 MF 475 WV.
42	20.4	" " 8 " 450 "
43	20.45	" " 16 " 450 "

REF No.	PART No.	DESCRIPTION
45	15.7	MICA COND. - .002 MF. ± 10%
46	15.5	" " .002 " 3
47	15.62	" " .004 " 5
48	15.3	" " .0001 " 10
49	15.3	" " .0001 " "
50	15.3	" " .0001 " "
51	15.6	" " .0025 " 3
52	15.2	" " .0005 " 10
53	15.52	" " .00026 " 5
54	15.63	" " .00093 " 3
55	15.16	" " 3 MMF 10
56	15.61	" " 35 " 5
57	5.10	" " 50 " 10
58	120.3	PILOT LT. 6-8V. .15A.
59	125.1	PHONO JACK
60	40.46	POWER TRANS. 115 V. 50-60~
61	40.47	" " 115 V. 25 ~
62	40.48	" " TAP PRI 110-130-150 220-240-250 V.
63	25.49	PADDING COND. - 70 MMF.
64	55.11	TONE CONTROL - 1/2 MEG.

REF No.	PART No.	DESCRIPTION
67	10.7	TUBULAR COND. .05 MF 400 V.
68	10.7	" " .05 " 400 "
69	10.7	" " .05 " 400 "
70	10.26	" " .02 " 200 "
71	10.26	" " .02 " 200 "
72	10.26	" " .02 " 200 "
73	10.5	" " .05 " 200 "
74	10.5	" " .05 " 200 "
75	10.5	" " .05 " 200 "
76	10.9	" " .1 " 400 "
77	10.9	" " .1 " 400 "
78	10.9	" " .1 " 400 "
79	10.9	" " .1 " 400 "
80	10.2	" " .1 " 200 "
81	10.2	" " .1 " 200 "
82	10.4	" " .01 " 200 "
83	10.10	" " .01 " 400 "
84	10.10	" " .01 " 400 "
85	10.17	" DUAL " .001 " 600 "
86	105.40	SPEAKER (MODEL 290 T)

REF No.	PART No.	DESCRIPTION
89	25.61	VARIABLE COND.
90	30.2	CARB. RES. - 10,000 OHMS 1/2W ±
91	15.3	MICA COND. - .0001 MF. ± 10%
92	35.20	L.W. ANT. COIL
93	35.21	" R.F. "
94	35.22	" OSC. "
95		ON-OFF SW. ON TONE CONT.
96		MIN. ADJ. ON COILS
97	15.58	MICA COND. - .00018 MF ± 5%
98	15.10	" " 50 MMF. 10
99	15.2	" " .0005 MF. "

I. F. - 456 KC.

FADA RADIO & ELECTRIC CO. LONG ISLAND CITY, N.Y.	
MODEL 291	
DRAWN BY JO	DATE 8-7-36
CHECKED BY J.M.S.	APPROVED BY JFS

NOTE (A) - ON SOME EARLY MODELS, A 250,000 CARB. RES. WAS

MODEL 311
Schematic
Parts List

FADA RADIO & ELECTRIC CORP.

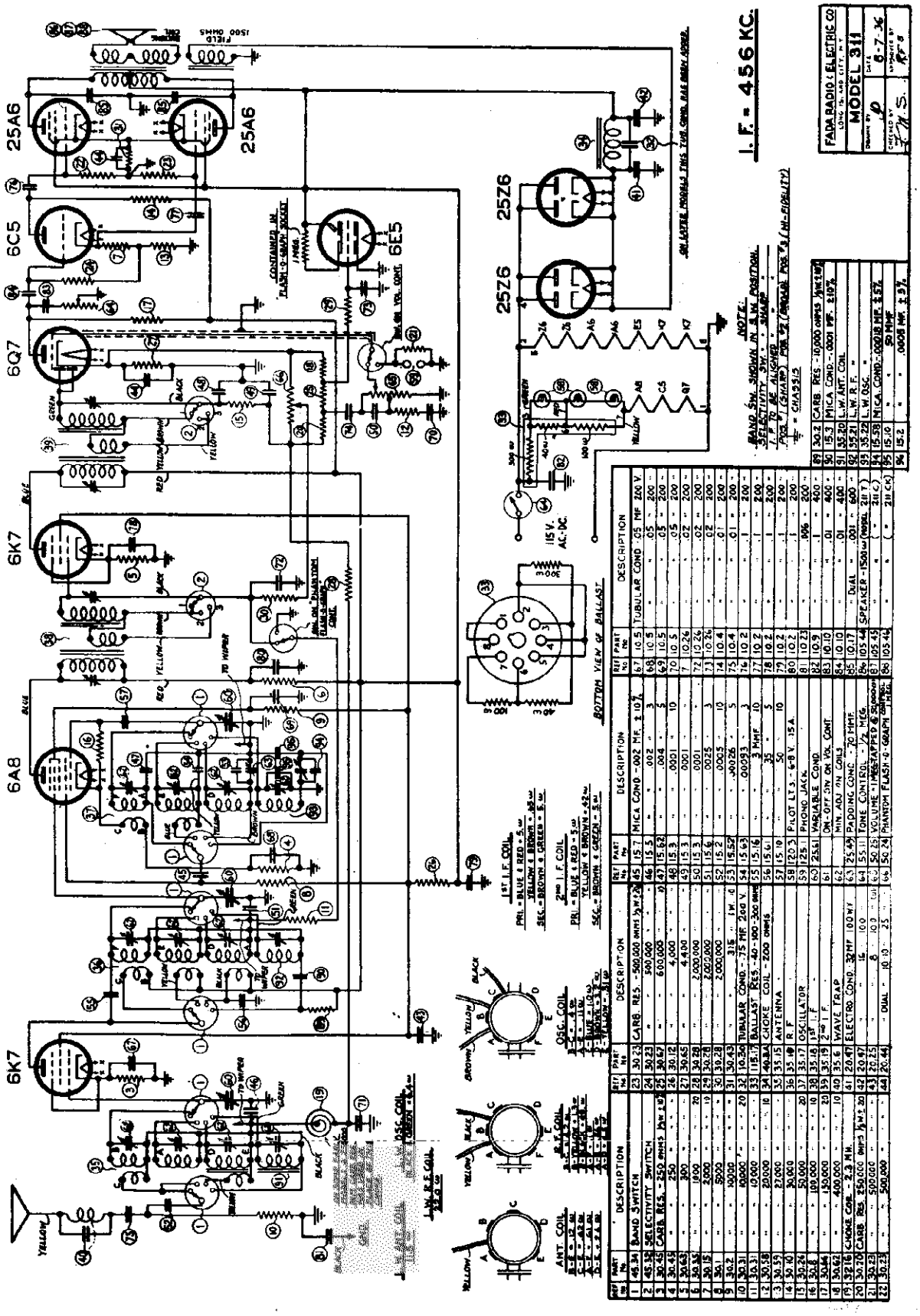

© John F. Rider, Publisher

FADA RADIO & ELECTRIC CORP.

MODEL 1462, Revise
Above Serial 221C
Schematic, Parts

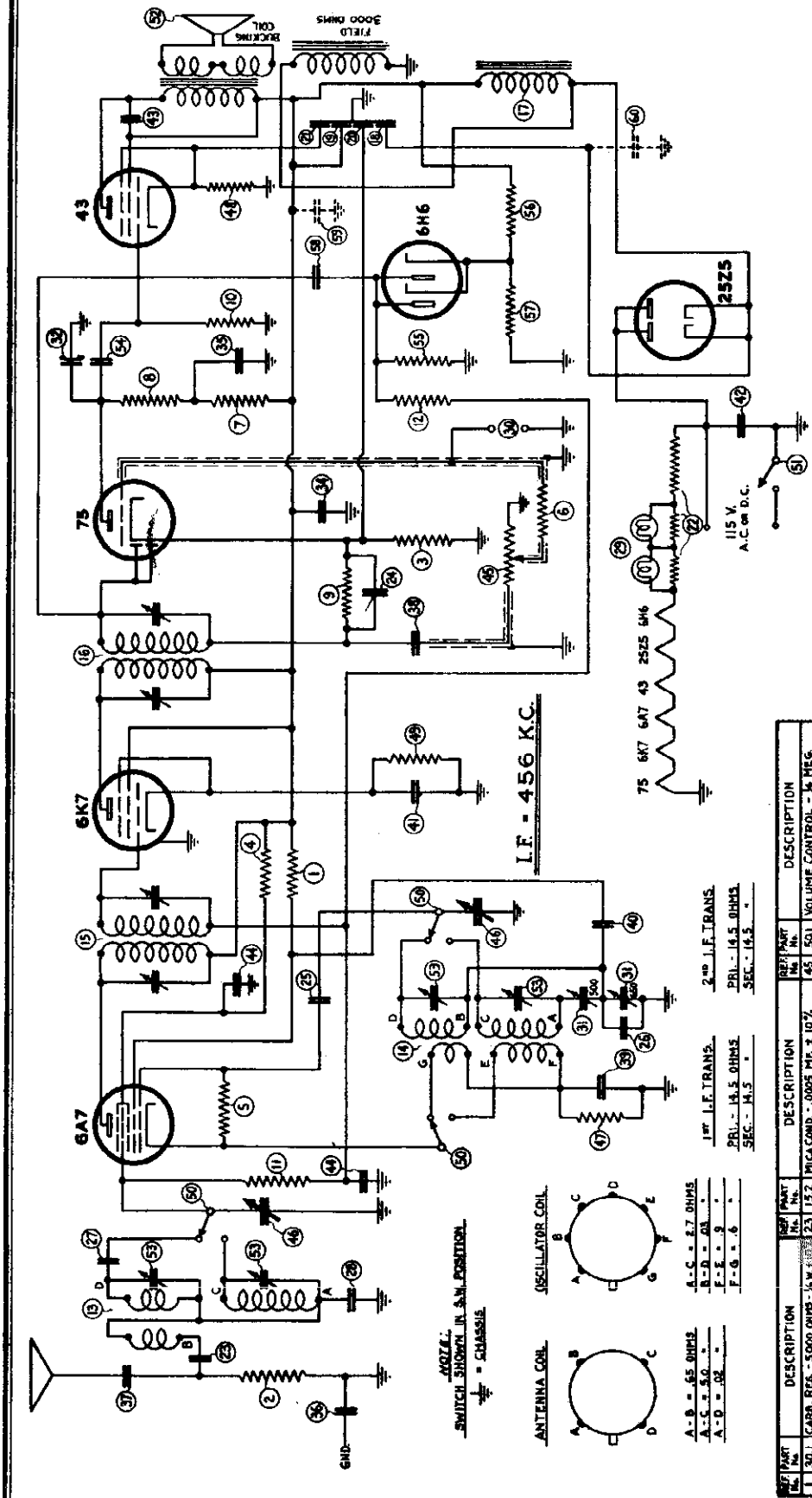

©John F. Rider, Publisher

MODEL 1463
Schematic
Parts List

FADA RADIO & ELECTRIC CORP.

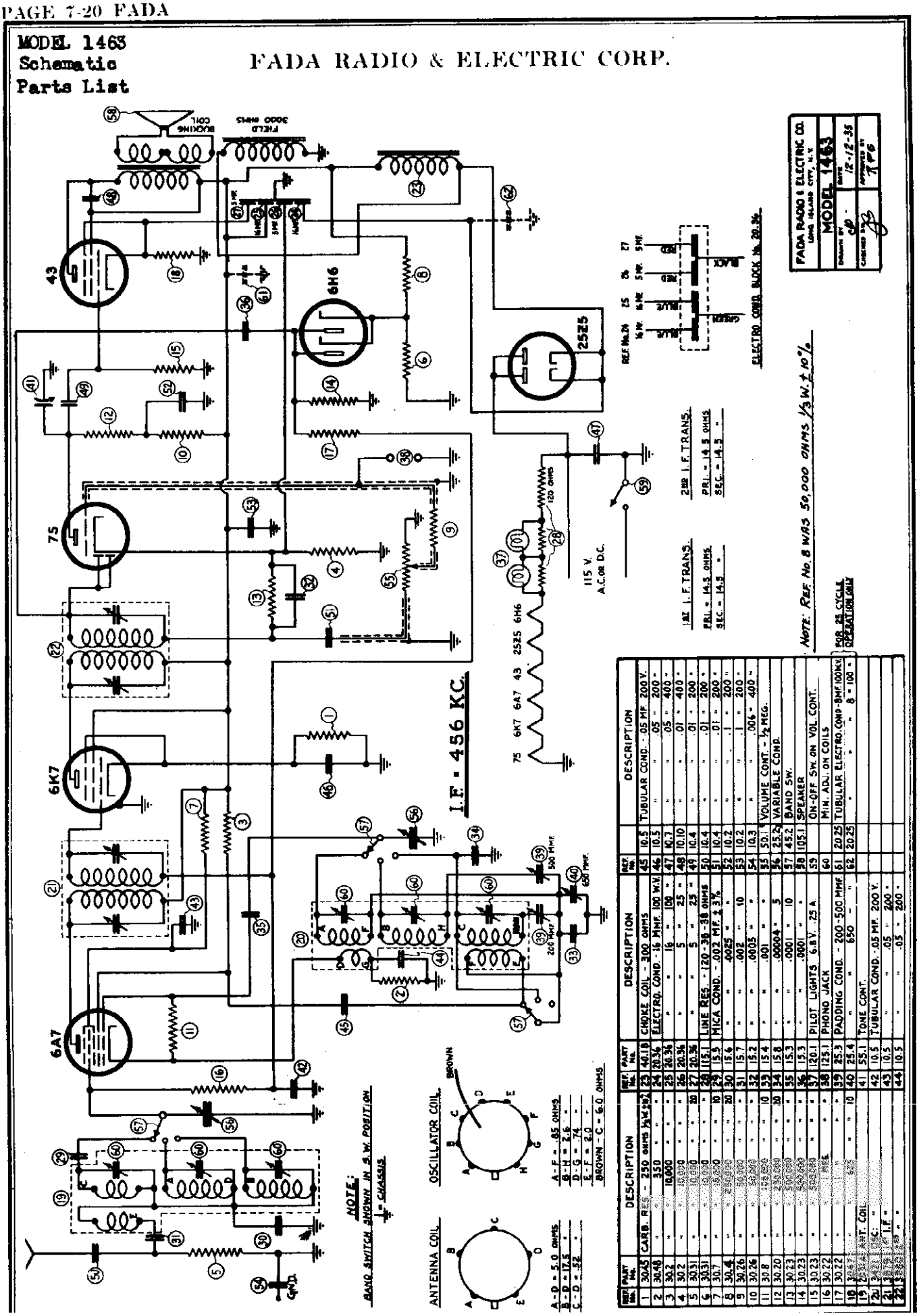

REF. NO.	PART NO.	DESCRIPTION	REF. NO.	PART NO.	DESCRIPTION
1	30.45	CARB. RES. - 250 OHMS ½ W. ± 5%	23	40.18	CHOKE COIL - 300 OHMS
2	30.40	" " 350 " " "	24	20.34	ELECTRO. COND. - 16 MMF. 100 W.V.
3	30.2	" " 10,000 " " "	25	20.34	" " 16 " 100 "
4	30.2	" " 50,000 " " "	26	20.34	" " 5 " 25 "
5	30.31	" " 1,000 " " "	27	20.34	" " 5 " 25 "
6	30.31	" " 5,000 " " "	28	115.1	LINE RES. - 120 - 38 - 38 OHMS
7	30.7	" " 25,000 " " "	29	15.5	MICA COND. - .002 MF. ± 3%
8	30.4	" " 250,000 " " "	30	15.6	" " .0025 " "
9	30.26	" " 1,000,000 " " "	31	15.7	" " .002 " 10
10	30.26	" " 2,500,000 " " "	32	15.2	" " .0005 " "
11	30.8	" " 1,000,000 " " "	33	15.4	" " .001 " "
12	30.20	" " 2,500,000 " " "	34	15.8	" " .0004 " 5
13	30.23	" " 500,000 " " "	35	15.3	" " .0001 " 10
14	30.23	" " 500,000 " " "	36	15.3	" " .0001 " "
15	30.23	" " 500,000 " " "	37	120.1	PILOT LIGHTS 6.8 V. .25 A.
16	30.22	" " 1 MEG. " " "	38	123.1	PHONO JACK
17	30.22	" " 1 " " "	39	25.3	PADDING COND. - 200 - 500 MMF
18	30.22	" " 1 " " "	40	25.4	" " 650 " "
19	20.34	ANT. COIL	41	55.1	TONE CONT.
20	20.34	OSC. "	42	10.5	TUBULAR COND. .05 MF. 200 V.
21	20.34	I.F. "	43	10.5	" " .05 " 200 "
22	20.34	I.F. "	44	10.5	" " .05 " 200 "
			45	10.5	TUBULAR COND. .05 MF. 200 V.
			46	10.5	" " .05 " 200 "
			47	10.7	" " .05 " 400 "
			48	10.10	" " .01 " 400 "
			49	10.4	" " .01 " 200 "
			50	10.4	" " .01 " 200 "
			51	10.4	" " .01 " 200 "
			52	10.2	" " .1 " 200 "
			53	10.2	" " .1 " 200 "
			54	10.3	" " .006 " 400 "
			55	50.1	VOLUME CONT. - ½ MEG.
			56	25.2	VARIABLE COND.
			57	45.2	BAND SW.
			58	105.1	SPEAKER
			59		ON-OFF SW. ON VOL. CONT.
			60		MIN. ADJ. ON COILS
			61	20.25	TUBULAR ELECTRO. COND - 8 MF. 100 W.V.
			62	20.25	" " " 8 - 100 "

FAIRBANKS-MORSE HOME APP., INC.

MODEL 40
Schematic
Voltage
Resistance

OHMS	VOLTS		VOLTS	OHMS
2100	-75	80 RECT.	-75	2100
85M	215		215	85M

OHMS	VOLTS		VOLTS	OHMS
50M	100	6C6	7.5	8M
75M	215		0	3
.22	6.3A.C.		7.5	8M
			0	0

OHMS	VOLTS		VOLTS	OHMS
1-MEG.	25	6C6	0	0
380M	30		0	0
0	0		6.3A.C.	.22

OHMS	VOLTS		VOLTS	OHMS
100M	200	41 OUTPUT	-3	450M
100M	200		0	0
.22	6.3A.C.		0	0

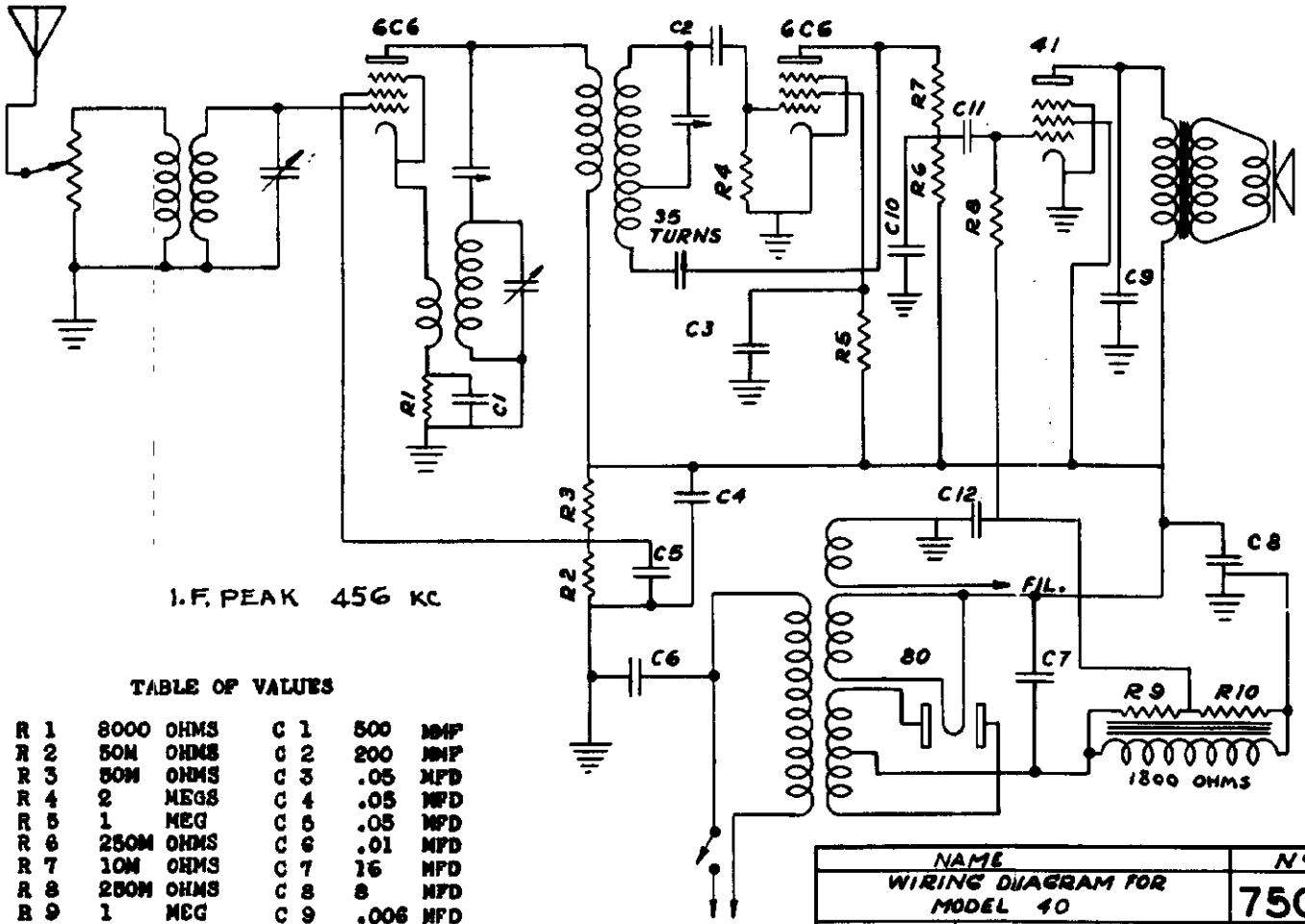

I.F. PEAK 456 KC

TABLE OF VALUES

R 1	8000	OHMS	C 1	500	MMF
R 2	50M	OHMS	C 2	200	MMF
R 3	50M	OHMS	C 3	.05	MFD
R 4	2	MEGS	C 4	.05	MFD
R 5	1	MEG	C 5	.05	MFD
R 6	250M	OHMS	C 6	.01	MFD
R 7	10M	OHMS	C 7	16	MFD
R 8	250M	OHMS	C 8	8	MFD
R 9	1	MEG	C 9	.006	MFD
R10	250M	OHMS	C10	.0005	MFD
			C11	.01	MFD
			C12	.1	MFD

A.C. SOURCE
110 VOLTS
60 CYCLE

NAME			Nº
WIRING DIAGRAM FOR MODEL 40			7506
DRAWN BY	CHECKED	SCALE	DATE
AH.	WM.	X = 1"	6-12-38

FAIRBANKS MORSE
HOME APPLIANCES, INC.

MODEL 40
Socket, Trimmers Alignment, Chassis Transformer Data

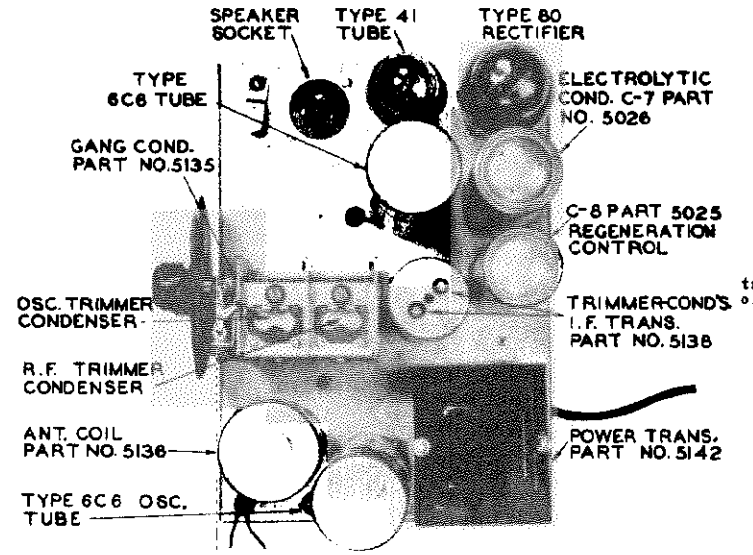

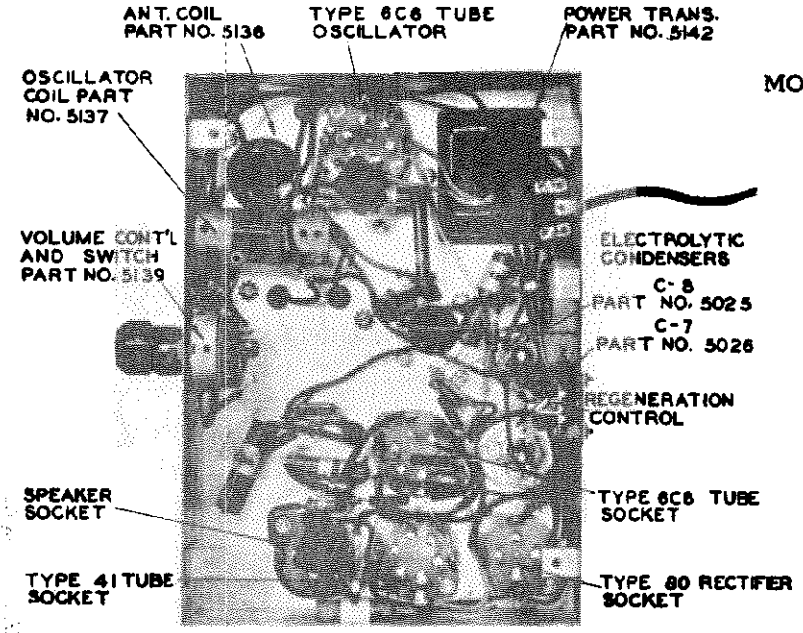

INTERMEDIATE FREQUENCY ALIGNMENT

1 - Turn the gang condenser to approximately one half maximum capacity (half meshed).

2 - Supply a 456 kilocycle signal from the signal generator to the antenna lead of the receiver through a .1 Mfd. condenser connected in series with the signal generator lead.

3 - Back the regeneration control trimmer (see Figure 1) out (counter-clockwise) to a point just below the point of oscillation.

4 - Adjust the two trimmers of the intermediate frequency transformer (see Figure 1) for maximum output with minimum input from the service oscillator.

RADIO FREQUENCY ALIGNMENT

The parallel or high frequency trimmer condensers are on the gang condenser. These trimmers are used for aligning the high frequency end of the broadcast band. The location of the trimmers is shown in Figure 1.

1 - Tune the receiver to 1500 kilocycles.

2 - Supply a 1500 kilocycle signal from the signal generator to the antenna lead of the receiver through a standard dummy antenna or a 200 Mmfd.(.0002 Mfd.)condenser, connected in series with the signal generator lead.

3 - Adjust the trimmer condenser on the front section of the gang condenser (Figure 1) to bring in the signal.

4 - Adjust the rear (R.F.) trimmer on the gang condenser for maximum output with minimum input from the service oscillator.

5 - Adjust the regeneration control by turning the adjusting screw clockwise until oscillation starts. Then back the adjusting screw out approximately one quarter turn. Check the sensitivity and, if the receiver is weak, bring up the sensitivity by readjusting the regeneration control.

MODEL 40

POWER TRANSFORMERS

Part No. 5142	110 Volt	50-60 cycle
Lead Color	Voltage	Resistance
Yellow	5.0	.33 ohm
Blue	6.3	.22 ohm
Black	110 (Primary)	12.10 ohms
Green	High Voltage	745. ohms
Red	Center Tap (Hi-Volt.)	

Part No. 5477	Universal	40-50-60 cycles
Lead Color	Voltage	Resistance
Yellow	5.0	.46 ohm
Blue	6.3	.29 ohm
Green	High Voltage	1080. ohms
Red	Center Tap (Hi-Volt.)	
Black	Common Primary	
White & Black	100-125 Primary	16.06 ohms
Red & Black	130-155 Primary	19.16 ohms
Brown & White	200-250 Primary	51.37 ohms

Part No. 5591		25 cycle
Lead Color	Voltage	Resistance
Blue	6.3	.32 ohm
Yellow	5.0	.44 ohm
Green	High Voltage	1093. ohms
Red	Center Tap (Hi-Volt.)	
Black	110 Primary	17.8 ohms

©John F Rider Publisher

MODEL 41
Schematic, Socket Alignment, Trimmers

FAIRBANKS-MORSE HOME APP., INC.

RESISTORS	CONDENSERS
R1 100 M	C1 .1
R2 50 M	C2 200 MMFD.
R3 25 M	C3 .1
R4 250 M	C4 8
R5 400 M	C5 .25
R6 500 M	C6 .1
R7 50 M	C7 .5
R8 500 M	C8 .1
R9 5 M	C9 .05
R10 1000	C10 200 MMFD.
R11 .6	C11 .02
	C12 .02

I.F. PEAK 456 KC

MODEL 41

NAME			Nº
WIRING DIAGRAM FOR MODEL # 41			7521
DRAWN BY	CHECKED	SCALE	DATE
Orf.			9-11-35

FAIRBANKS MORSE
HOME APPLIANCES, INC.

I-F. ALIGNMENT:
Set dial at 530 ko. with gang condenser fully meshed and tighten set screw. Connect 456-ko. signal to grid of IC6 and adjust i-f. trimers.
R-F. ALIGNMENT:
Set dial to 1500 ko. Connect 1500-ko.signal to antenna lead (blue) through dummy or .0002-mf. condenser. Adjust oscillator and r-f. trimers in this order.
BATTERY DATA:
If set is operated on Air Cell "A" battery, the resistance link plug must be in Socket "A".
If set is operated on 2-volt storage battery, the the jumper link must be substituted for the plug.
If a 3-volt battery is used, a special ballast tube is plugged in the "A" socket. Tube part #5674

©John F. Rider, Publisher

MODEL 54
Schematic, Voltage
Socket, Resistance

FAIRBANKS-MORSE HOME APP., INC.

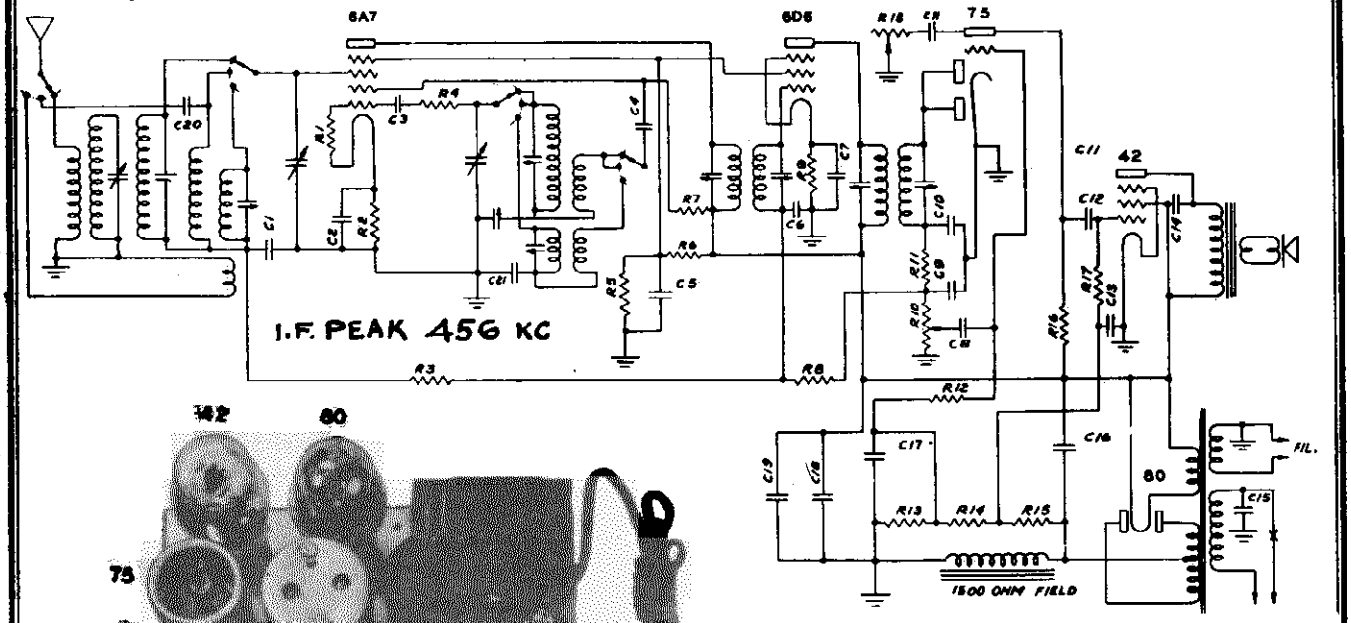

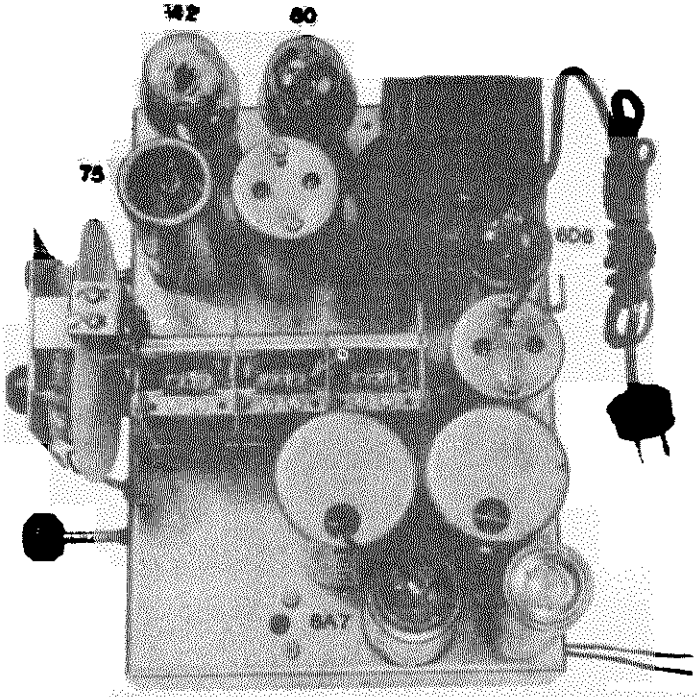

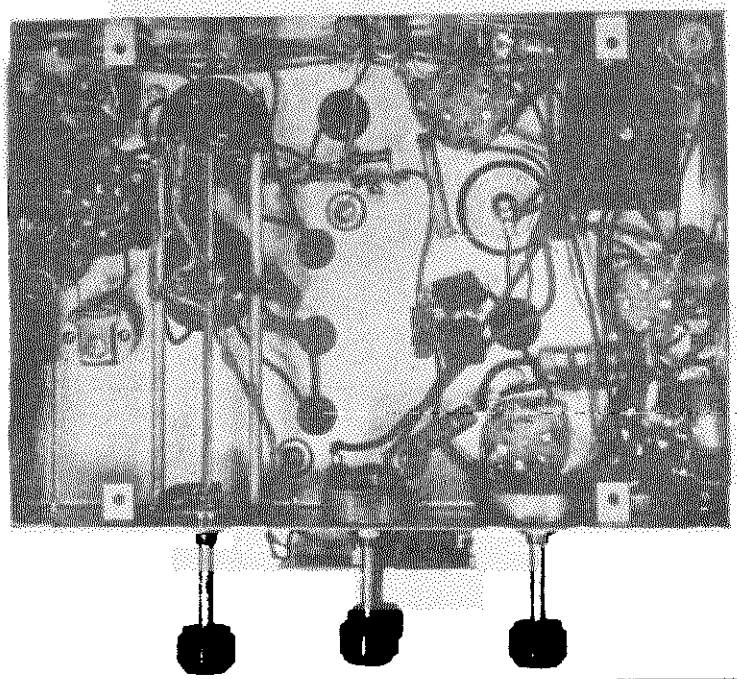

RESISTORS		CONDENSERS IN MFD. UNLESS SHOWN	
R 1	50M	C1	.05
R 2	300	C2	.05
R 3	500M	C3	100 MMF.
R 4	100	C4	.001
R 5	50M	C5	.1
R 6	20M	C6	.05
R 7	10M	C7	.05
R 8	500M	C8	.02
R 9	300	C9	100 MMF
R 10	500M	C10	100 MMF
R 11	50M	C11	.006
R 12	500M	C12	.02
R 13	35M	C13	.25
R 14	400M	C14	.006
R 15	2 MEG	C15	.01
R 16	500M	C16	16
R 17	500M	C17	.1
R 18	500M	C18	18
		C19	.05
		C20	10MMF
		C21	.006

NAME			NO.
WIRING DIAGRAM FOR MODEL # 54			7520
DRAWN BY	CHECKED	SCALE	DATE
GM		X"=1"	8-26-38
FAIRBANKS MORSE HOME APPLIANCES, INC.			

MODEL 54

OHMS	VOLTS		VOLTS	OHMS
		6A7	180	80M
			-7.5	50M
50M	100		0	2-MEG.
			3.5	300
70M	240		0	0
.1	6.3 A.C.		OSC. 1ST DET.	
1800	-105	80	-105	1800
70M	240		240	70M
			RECT.	
			3	300
50M	100		0	1-MEG.
70M	240	6D6	3	300
.1	6.3 A.C.		0	0
			I.F.	
			-2	550M
550M	-.2		-.2	530M
570M	80	75	0	0
.1	6.3 A.C.		0	0
			DET-AVC-AF.	
70M	240		-3.5	1-MEG.
70M	225	42	0	0
.1	6.3 A.C.		8	0
			OUTPUT	

©John F. Rider, Publisher

©John F. Rider, Publisher

MODELS 54 AND 66

INTERMEDIATE FREQUENCY ALIGNMENT

1 - Turn the gang condenser to maximum capacity (fully meshed).

2 - Set band selector switch on "Broadcast" position.

3 - Supply a 486 kilocycle signal from the signal generator to the grid of the first detector tube (6A7 or 6A8) through a .1 Mfd. condenser connected in series with the signal generator lead.

4 - Adjust the four trimmers of the two intermediate frequency transformers (see Figure 3) for maximum output with minimum input from the service oscillator.

RADIO FREQUENCY ALIGNMENT The parallel or high frequency trimmer condensers for each coil are mounted in the front shield can with the coil.These trimmers are used for aligning the high frequency end of each band. The location of the various trimmers is shown in Figure 3.

The oscillator adjustable, series padding condenser is used for tracking the oscillator at the low frequency end of the broadcast band. The padding condenser may be adjusted from the top of the chassis through the holes indicated in Figure 3. Since a fixed mica padding condenser is employed on the short wave band, no adjustment is necessary. While making padding condenser adjustments, the gang condenser should be rotated back and forth across the signal to insure adjustment to the peak of greatest intensity.

DIAL ADJUSTMENT Before making any radio frequency alignment adjustments, close the variable tuning condenser (maximum capacity), loosen the screw that secures the dial pointer, place the pointer in a horizontal position (gang condenser still closed) and then tighten the screw.

BROADCAST BAND

1 - Turn the band selector switch to the broadcast (counter-clockwise) position.

2 - Tune the receiver to 1715 kilocycles.

3 - Supply a 1715 kilocycle signal from the signal generator to the antenna lead of the receiver through a standard dummy antenna or a 200 Mmfd.(.0002 Mfd.)condenser, connected in series with the signal generator lead.

4 - Adjust the broadcast band oscillator trimmer condenser (Figure 3)for maximum output with minimum input from the signal generator.

5 - Tune the receiver to 1500 kilocycles.

6 - Supply a 1500 kilocycle signal from the signal generator to the antenna lead of the receiver, through the same connections used in the previous adjustment.

7 - Adjust the broadcast band radio frequency and preselector trimmers (see Figure 3) for maximum output with minimum input from the signal generator.

8 - Tune the receiver to 600 kilocycles.

9 - Supply a 600 kilocycle signal to the antenna of the receiver through the same connections as previously used.

10 - Adjust the broadcast band oscillator padding condenser (top of chassis,see Figure 3)for maximum output with minimum input from the signal generator,at the same time rocking the tuning condenser back and forth across the signal to insure the peak of greatest intensity.

11 - Check at 1715 kilocycles and then at 600 kilocycles. Make any adjustments that are necessary to obtain satisfactory calibration.

POLICE BAND

1 - Turn the band selector switch to the police band (center) position.

2 - Tune the receiver to a 2.4 megacycles.

3 - Supply a 2.4 megacycle signal from the signal generator to the antenna lead of the receiver through a 400 ohm carbon resistor (dummy antenna), connected in series with the signal generator lead.

4 - The 2.4 megacycle signal should be received near the calibrated section of the dial.If this is not the case, check the oscillator tube,switch connections and coils.No adjustment is necessary on this band.

SHORT WAVE BAND

1 - Turn the band selector switch to the short wave (clockwise) position.

2 - Tune the receiver to 18 megacycles.

3 - Supply an 18 megacycle signal from the signal generator to the antenna lead of the receiver through a 400 ohm carbon resistor (dummy antenna), connected in series with the signal generator lead.

4 - Turn the short wave oscillator trimmer(see Figure 3)all the way in and back it out until the 18 megacycle signal from the signal generator is received. The first signal, found at about 17 megacycles, should be the image; the second should be the 18 megacycle signal.

5 - Adjust the short wave radio frequency trimmer (see Figure 3) for maximum output with minimum input from the signal generator.

6 - Check and, if necessary, readjust all trimmers for maximum output with minimum input from the signal generator.

WARNING The image signal should be received at approximately 17 megacycles on the dial.If not, the oscillator has been aligned to the image frequency and the oscillator trimmer condenser must be backed out until the correct signal is received at 18 megacycles and the image at approximately 17 megacycles. If readjustment is found necessary, the antenna and radio frequency stage trimmers should also be checked again.

THE MODEL 54 CHASSIS The Model 54 chassis employs a type 6A7 pentagrid converter.The incoming signal is supplied to this tube through a preselector coil arrangement. This tube serves the dual function of first detector and oscillator. A type 6D6 tube is employed as the intermediate frequency amplifier. This tube and the two intermediate frequency transformers are responsible for the selectivity and gain obtained from the intermediate frequency amplifier.

A type 75 tube performs the triple function of diode detector, automatic volume control and first audio amplifier tube. The output of the triode section of the type 75 tube is resistance coupled to a type 42 tube, connected as a pentode in the power output stage. A type 80 rectifier tube is employed in a conventional power supply circuit.

THE MODEL 66 CHASSIS The Model 66 chassis employs a type 6A8 tube as the pentagrid converter.A type 6K7 is used in the intermediate frequency amplifier. A type 6H6 diode, connected as a half wave rectifier, performs the dual function of second detector and automatic volume control tube. A type 6F8 tube is employed as the first audio amplifier and the output of this stage is resistance coupled to the type 6F6 tube, connected as a pentode in the power output stage.A single type 5Z4 full wave rectifier tube is employed in a conventional power supply circuit.

AUTOMATIC VOLUME CONTROL

MODEL 66 CHASSIS A type 6H6 tube is employed as the second detector in a half wave rectifier circuit, the diode plates being connected together. Current flows from the diode plates to the cathode and to ground. Here it is picked up at the point where resistor R-10 is grounded and flows through resistors R-10 and R-11, through the secondary of the second intermediate frequency transformer, back to the plates, thus forming the complete circuit.

The D. C. component of this current produces a voltage drop across resistor R-10 in proportion to the strength of the incoming signal. The grid returns of the 6A8 pentagrid converter and the 6K7 intermediate frequency amplifier are connected through the isolating resistors R-3 and R-8 to the point of juncture between resistors R-10 and R-11, thus adding the voltage drop obtained across resistor R-10 to the fixed bias on the two controlled tubes.The fixed bias is obtained from the individual bias resistors, R-2 and R-9, located in the cathode circuits of the tubes. Resistor R-10 is also the manual volume control. The audio component of voltage drop across the resistor is taken off on the sliding arm of the control through condenser C-8 and is applied to grid of the type 6F8, first audio amplifier tube.

MODEL 54 CHASSIS The A. V. C. circuit and its operation in the Model 54 chassis is identical to that in the Model 66. The only differences are in the tubes. A type 75 tube performs the dual function of diode rectifier and first audio amplifier in place of the type 6H6 tube and the type 6F8 tube in the Model 66 chassis. A type 6D6 tube is found in place of the type 6K7 tube in the intermediate frequency stage. A type 6A7 pentagrid converter replaces the type 6A8 found in the Model 66 chassis.

THE ANTENNA

A good outside antenna is recommended for best results. An inside antenna will usually give satisfactory results on local broadcast stations, but it cannot be relied upon for distant and short wave reception.

The most suitable antenna for use in large cities or congested radio districts, where interference is a serious problem, is the doublet. In small centers of population, where interference is not serious, a single wire antenna having a total length of from 75 to 100 feet, erected as high as possible, with a good insulator at each end, will prove satisfactory. The lead-in should go to the receiver by the most direct route and should be kept away, as far as possible, from obstructions. Such an antenna will have less directional properties and less tendency to pick up power line interference than a low antenna with a long horizontal lead.

THE FAIRBANKS-MORSE ANTENNA For those installations where a doublet type antenna is most suitable, the Fairbanks-Morse engineers offer the FAIRBANKS-MORSE MODEL 20 NOISE REDUCING ANTENNA SYSTEM. This antenna is especially designed for these receivers and requires no switching arrangement, since it automatically balances itself to the receiver on all bands.

The BLUE wire on the receiver is to be connected to the antenna. The BLACK wire on the receiver is to be connected to the ground. When a FAIRBANKS-MORSE ANTENNA is used, the BLUE wire from the receiver is to be connected to the red wire on the antenna set coupler, and the BLACK wire from the receiver is to be connected to the black wire on the antenna set coupler and to a good ground.

POWER TRANSFORMERS

Part No. 8121	110 Volt	50-60 cycle
Lead Color	Voltage	Resistance
Black	6.3	.18 ohm
Yellow	5.0	.14 ohm
Brown	110 (Primary)	11.0 ohms
Green	High Voltage	596.5 ohms
Red	Center Tap (Hi-Volt)	

Part No. 8174	Universal	40-50-60 cycle
Lead Color	Voltage	Resistance
Black	6.3	.28 ohm
Yellow	5.0	.16 ohm
Green	High Voltage	687.
Red	Center Tap (Hi-Volt)	
Brown	Common Primary	
Black & White	100-125 Primary	14.7 ohms
Red & Black	130-135 Primary	20.5 ohms
Brown & White	200-250 Primary	52.5 ohms

Part No. 8892		25 cycle
Lead Color	Voltage	Resistance
Black	6.3	.22 ohm
Yellow	5.0	.18 ohm
Green	High Voltage	816.0 ohms
Red	Center Tap (Hi-Volt)	
Brown	110 Primary	14.9 ohms

MODEL 56
Schematic, Voltage
Transformer Data
Parts List

FAIRBANKS-MORSE HOME APP., INC.

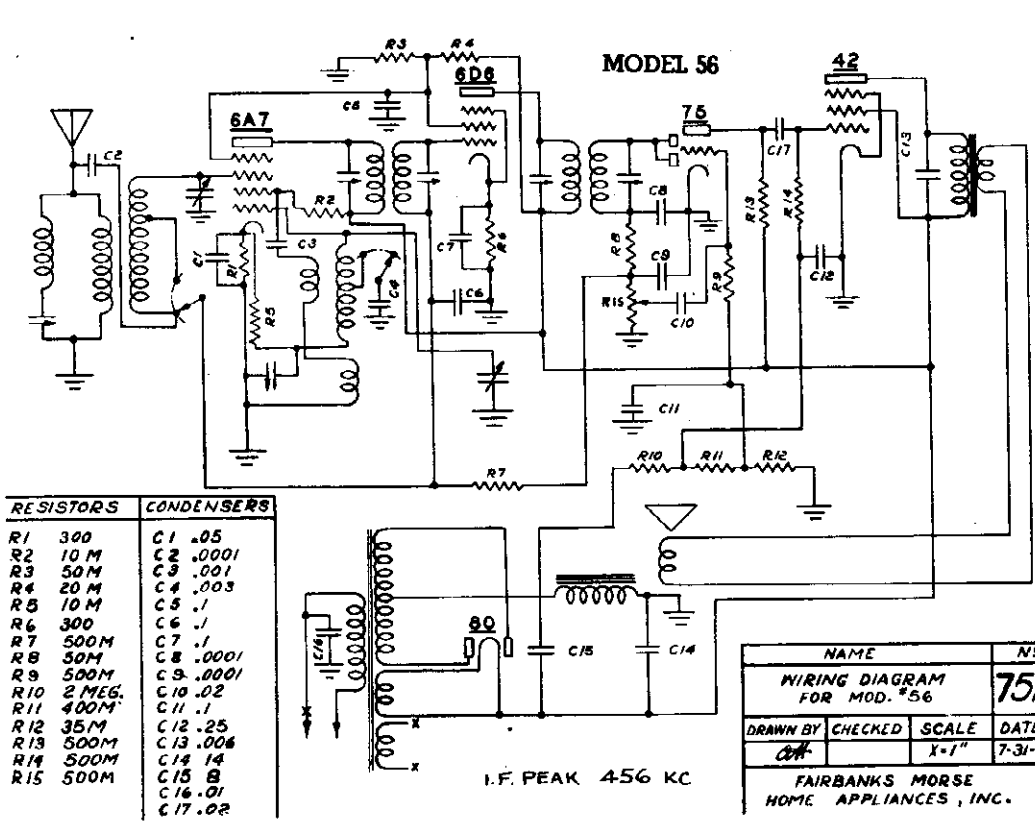

RESISTORS		CONDENSERS	
R1	300	C1	.05
R2	10 M	C2	.0001
R3	50 M	C3	.001
R4	20 M	C4	.003
R5	10 M	C5	.1
R6	300	C6	.1
R7	500 M	C7	.1
R8	50 M	C8	.0001
R9	500 M	C9	.0001
R10	2 MEG.	C10	.02
R11	400 M	C11	.1
R12	35 M	C12	.25
R13	500 M	C13	.006
R14	500 M	C14	14
R15	500 M	C15	8
		C16	.01
		C17	.02

NAME			NO.
WIRING DIAGRAM FOR MOD. #56			7512
DRAWN BY	CHECKED	SCALE	DATE
		X-1"	7-31-35
FAIRBANKS MORSE HOME APPLIANCES, INC.			

6D6

VOLTS		OHMS
6.3 A.C.	H	0
0	H	0
2.8	K	300
0	G	1 MEG.
2.8	S	300
100	S	50 M
260	P	70 M

80

VOLTS		OHMS
260	F	70 M
260	F	70 M
A.C.	P	2000
A.C.	P	2000

42

VOLTS		OHMS
6.3 A.C.	H	0
0	H	0
0	K	0
-7	G	1 MEG.
260	S	70 M
245	P	70 M

6A7

VOLTS		OHMS
6.3 A.C.	H	0
0	H	0
3	K	300
0	G	1 MEG.
-3	G	1900
200	P	80 M
100	S	50 M
260	P	35 M

75

VOLTS		OHMS
6.3 A.C.	H	0
0	H	0
0	K	0
-5	G	500 M
-1	P	500 M
-1	P	500 M
90	P	600 M

POWER TRANSFORMERS

Part No. 5520	110 Volt 50-60 cycle	
Lead Color	Voltage	Resistance
Red	6.3	.295 ohms
Blue	5.0	.19 ohms
Brown	10.9 (Primary)	10.9 ohms
Green	High Voltage	686.6 ohms
Black	Center Tap (Hi-Volt.)	

Part No. 5174	Universal 40-50-60 cycles	
Lead Color	Voltage	Resistance
Black	6.3	.25 ohms
Yellow	5.0	.16 ohms
Green	High Voltage	657. ohms
Red	Center Tap (Hi-Volt.)	
Brown	Common Primary	14.7 ohms
Black & White	100-125 Primary	20.1 ohms
Red & Black	110-135 Primary	52.8 ohms
Brown & White	200-250 Primary	

Part No. 5592	25 cycle	
Lead Color	Voltage	Resistance
Black	6.3	.22 ohms
Yellow	5.0	.18 ohms
Green	High Voltage	816.0 ohms
Red	Center Tap	
Brown	110 Primary (Hi-Volt.)	14.9 ohms

PARTS LIST FOR MODEL 56 RADIO RECEIVER

Part Number	Description	List Price
5578	Cabinet and Carton, #19	8.35
5194	Cabinet and Carton, #45	28.00
5489	Coil Assembly - Antenna	1.00
5490	Coil Assembly - Oscillator	1.00
5485	Condenser - Variable, 2 gang	2.50
5025	Condenser - Electrolytic, 8 Mfd. 450 volt - Wet	1.10
5519	Condenser - Electrolytic, 14 Mfd. 300 volt	1.25
5150	Condenser - Padding (500 Mmf. Max.)	.50
5015	Condenser - .1 Mfd. 200 volt - Paper	.20
5012	Condenser - Paper, .05 Mfd. 200 volt	.20
5017	Condenser - Paper, .25 Mfd. 200 volt	.25
5013	Condenser - Paper, .02 Mfd. 600 volt	.20
5016	Condenser - Paper, .006 Mfd. 600 volt	.20
5014	Condenser - Paper, .05 Mfd. 400 volt	.20
5018	Condenser - Metal Clad, .01 Mfd. 1000 volt	.30
5019	Condenser - Mica, 100 Mmfd., Wire Leads	.20
5020	Condenser - Mica, 1000 Mmfd., Wire Leads	.20
5348	Condenser - Mica, 3000 Mmfd., Wire Leads	.35
5038	Cord - A.C. Line	.50
5866	Control Assembly - Volume and Switch	1.25
5672	Control - Tone Switch	.35
5493	Dial Assembly	2.50
5567	Dial Window - Glass	.30
5494	Dial Escutcheon - Metal	.50
5088	Knobs - Wood	.20
5048	Pilot Light - 6-8 volt	.15
5103	Resistor, 20,000 ohm 1 watt - Carbon	.20
5002	Resistor, 50,000 ohm 1/2 watt - Carbon	.20
5006	Resistor, 50,000 ohm 1/2 watt - Carbon	.20
5007	Resistor, 500,000 ohm 1/2 watt - Carbon	.20
5004	Resistor, 300 ohm 1/4 watt - Carbon	.20
5010	Resistor, 2 Megohm 1/2 watt - Carbon	.20
5009	Resistor, 400,000 ohm 1/2 watt - Carbon	.20
5008	Resistor, 35,000 ohm 1/2 watt - Carbon	.20
5003	Resistor, 10,000 ohm 1/4 watt - Carbon	.20
5492	Resistor, 10,000 ohm 1 2 watt - Carbon	.20
5032	Socket - 4-Prong	.10
5033	Socket - 6-Prong	.15
5034	Socket - 7-Prong	.15
5331	Speaker - 6 inch Dynamic	5.80
5334	Speaker - 8 inch, 1500 ohm field	6.50
5491	Switch Assembly - Band	.65
5520	Transformer - Power, 110 volt 50-60 cycle	3.50
5174	Transformer - Universal Power	4.75
5592	Transformer - Power, 25 cycle	5.40
5487	Transformer - I.F. Input	1.50
5488	Transformer - I.F. Output	1.50
5550	Wave Trap Assembly	1.00

©John F. Rider, Publisher

©John T. Riddy Publishers

MODEL 56 ALIGNMENT PROCEDURE

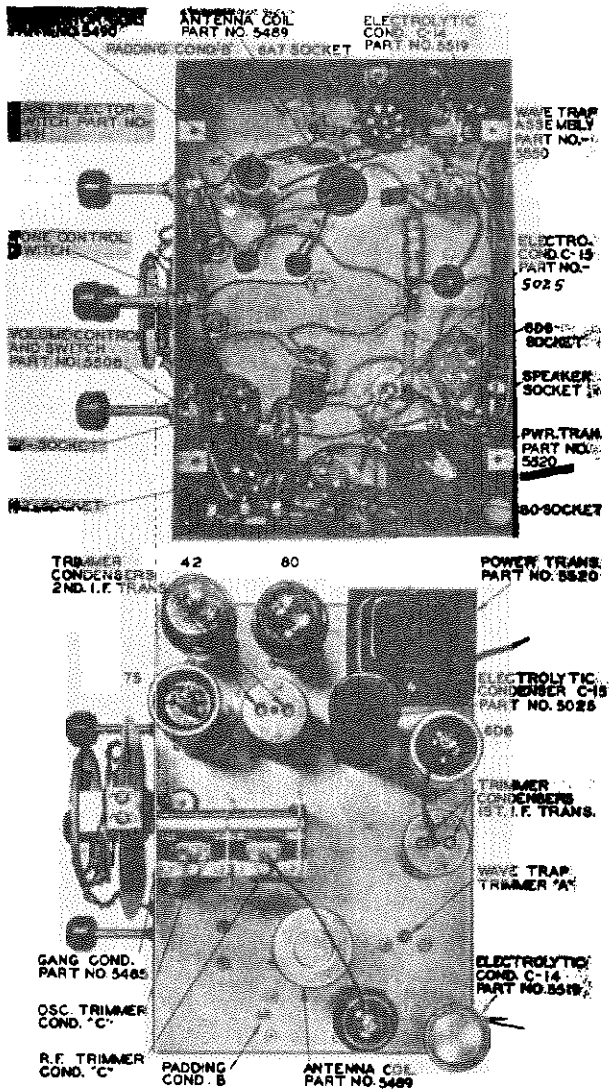

To insure obtaining the performance the model 56 receiver is capable of delivering, it is essential that it be aligned perfectly. For this reason, it is urged that the following instructions be studied carefully before any alignment adjustments are attempted.

Proper adjustment of the various tuned circuits will be possible only through the use of an accurate and reliable signal generator employed in conjunction with an output meter, which may be connected across the voice coil leads of the loud speaker.

NOTE - All adjustments should be made with the volume control "full on". Any desired variation in signal strength should be obtained by adjusting the output of the signal generator.

INTERMEDIATE FREQUENCY ALIGNMENT

1 - Turn the gang condenser to maximum capacity (fully meshed).

2 - Set the band selector switch on the "Broadcast" position.

3 - Supply a 456 kilocycle signal from the signal generator to the antenna lead of the receiver through a .1 Mfd. condenser connected in series with the signal generator lead.

4 - Adjust the four trimmers of the two intermediate frequency transformers (see Figure 1) for maximum output with minimum input from the service oscillator.

5 - Adjust the wave trap trimmer "A" (see Figure 1) for minimum output.

RADIO FREQUENCY ALIGNMENT The parallel or high frequency trimmer condensers for the broadcast band are on the gang condenser. These trimmers are used for aligning the high frequency end of the broadcast band. The location of the trimmers is shown in Figure 1.

The oscillator adjustable series padding condenser is used for tracking the oscillator at the low frequency end of the broadcast band. The padding condenser may be adjusted from the top of the chassis through the hole indicated in Figure 1. While making padding condenser adjustments, the gang condenser should be rotated back and forth across the signal to insure adjustment to the peak of greatest intensity.

DIAL ADJUSTMENT Before making any alignment adjustments, close the variable tuning condenser (maximum capacity), place the dial pointer in a horizontal position (gang condenser still closed) and then proceed with the following adjustments.

BROADCAST BAND

1 - Turn the band selector switch to the broadcast (counter-clockwise) position.

2 - Tune the receiver to 1500 kilocycles.

3 - Supply a 1500 kilocycle signal from the signal generator to the antenna lead of the receiver through a standard dummy antenna or a 200 Mmfd. (.0002 Mfd.) condenser, connected in series with the signal generator lead.

4 - Adjust the trimmer condensers on the gang condenser (Figure 1) for maximum output with minimum input from the signal generator.

5 - Tune the receiver to 600 kilocycles.

6 - Supply a 600 kilocycle signal to the antenna of the receiver through the same connections as previously used.

7 - Adjust the broadcast band oscillator padding condenser "B" (top of chassis, see Figure 1) for maximum output with minimum input from the signal generator, at the same time rocking the tuning condenser back and forth across the signal to insure the peak of greatest intensity.

8 - Check at 1500 kilocycles and then at 600 kilocycles. Make any adjustments that are necessary to obtain satisfactory calibration.

ANTENNA AND GROUND CONNECTIONS

The BLUE wire on the receiver is to be connected to the antenna. The BLACK wire on the receiver is to be connected to the ground. When a FAIRBANKS-MORSE ANTENNA is used, the BLUE wire from the receiver is to be connected to the red wire on the antenna set coupler and the BLACK wire from the receiver is to be connected to the black wire on the antenna set coupler and to a good ground.

MODEL 63
Schematic, Socket
Chassis, Trimmers
Voltage, Resistance

FAIRBANKS-MORSE HOME APP., INC.

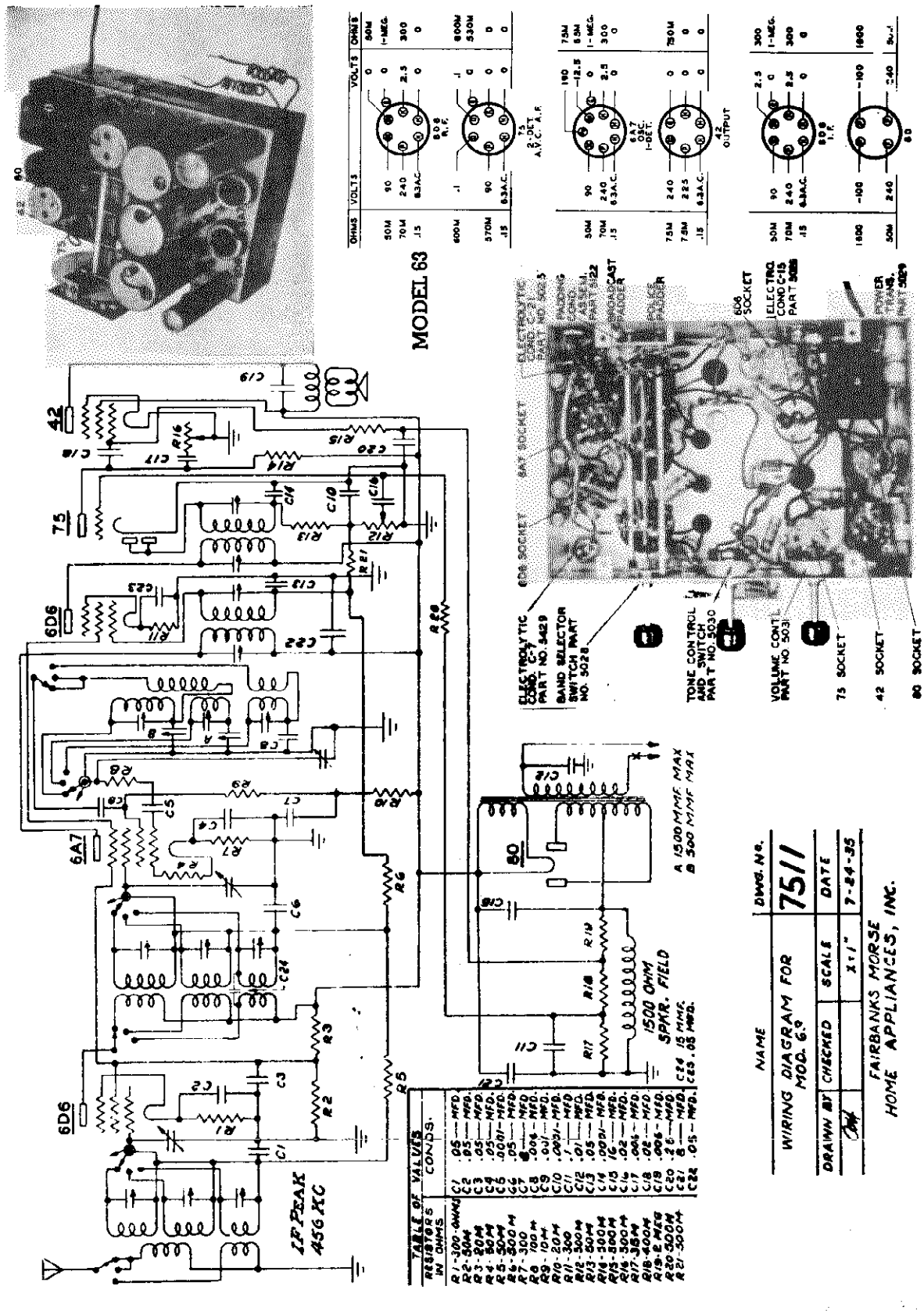

©John F. Rider, Publisher

©John F. Rider, Publisher

ALIGNMENT PROCEDURE MODEL 63 MODEL 71

Proper adjustment of the various tuned circuits will only be possible through the use of an accurate and reliable signal generator employed in conjunction with an output meter, which may be connected across the voice coil leads of the loud speaker.

NOTE - All adjustments should be made with the volume control "full on". Any desired variation in signal strength should be obtained by adjusting the output of the signal generator.

INTERMEDIATE FREQUENCY ALIGNMENT

1 - Turn the gang condenser to maximum capacity (fully meshed).

2 - Supply a 456 kilocycle signal from the signal generator to the grid of the first detector tube (6A7 or 6A8) through a .1 Mfd. condenser connected in series with the signal generator lead.

3 - Adjust the four trimmers of the two intermediate frequency transformers (see Figure 1) for maximum output with minimum input from the service oscillator.

RADIO FREQUENCY ALIGNMENT The parallel or high frequency trimmer condensers for each coil are housed in the same shield can with the coil. These trimmers are used for aligning the high frequency end of each band. The location of the various trimmers is shown in Figure 1.

The oscillator, adjustable, series padding condensers are used for tracking the oscillator at the low frequency end of each band. The padding condenser may be adjusted from the rear of the chassis through the holes indicated in Figure 1. Since a fixed mica padding condenser is employed on the short wave band, no adjustment is necessary. While making padding condenser adjustments, the gang condenser should be rotated back and forth across the signal to insure adjustment to the peak of greatest intensity.

DIAL ADJUSTMENT Before making any radio frequency alignment adjustments, close the variable tuning condenser (maximum capacity), loosen the screw that secures the dial pointer, place the pointer in a horizontal position (gang condenser still closed) and then tighten the screw.

BROADCAST BAND

1 - Turn the band selector switch to the broadcast (counter-clockwise) position.

2 - Tune the receiver to 1500 kilocycles.

3 - Supply a 1500 kilocycle signal from the signal generator to the antenna lead of the receiver through a standard dummy antenna or a 200 Mmfd. (.0002 Mfd.) condenser, connected in series with the signal generator lead.

4 - Adjust the broadcast band oscillator trimmer condenser (Figure 1) for maximum output with minimum input from the signal generator. Then adjust the broadcast band radio frequency and antenna stage trimmers for maximum output.

5 - Tune the receiver to 600 kilocycles.

6 - Supply a 600 kilocycle signal to the antenna of the receiver through the same connections as previously used.

7 - Adjust the broadcast band oscillator padding condenser (rear of chassis, see Figure 1) for maximum output with minimum input from the signal generator, at the same time rocking the tuning condenser back and forth across the signal to insure the peak of greatest intensity.

8 - Check at 1500 kilocycles and then at 600 kilocycles. Make any adjustments that are necessary to obtain satisfactory calibration.

POLICE BAND

1 --Turn the band selector switch to the police band (center) position.

2 - Tune the receiver to 5.4 megacycles.

3 - Supply a 5.4 megacycle signal from the signal generator to the antenna lead of the receiver through a 400 ohm carbon resistor (dummy antenna), connected in series with the signal generater lead.

4 - Adjust the police band oscillator trimmer condenser (Figure 1) for maximum output with minimum input from the signal generator, then adjust the police band radio frequency and antenna stage trimmers for maximum output.

5 - Tune the receiver to 1.8 megacycles.

6 - Supply a 1.8 megacycle signal to the receiver through the same connections used on the previous adjustment.

7 - Adjust the police band oscillator padding condenser (rear of chassis, see Figure 1) for maximum output with minimum input from the signal generator, at the same time rocking the tuning condenser back and forth across the signal to insure the peak of greatest intensity.

8 - Check at 5.4 megacycles and then at 1.8 megacycles and make any adjustments that are necessary to obtain satisfactory calibration.

SHORT WAVE BAND

1 - Turn the band selector switch to the short wave (clockwise) position.

2 - Tune the receiver to 18 megacycles.

3 - Supply an 18 megacycle signal from the signal generator to the antenna lead of the receiver through a 400 ohm carbon resistor (dummy antenna), connected in series with the signal generater lead.

4 - Turn the short wave antenna stage trimmer (see Figure 1) all the way in and then back it out one turn.

5 - Turn the short wave radio frequency stage trimmer (see Figure 1) all the way in and back it out one-half turn.

6 - Turn the short wave oscillator trimmer (see Figure 1) all the way in and back it out until the 18 megacycles signal from the signal generator is received. The first signal, found at about 17 megacycles, should be the image; the second, should be the 18 megacycle signal.

7 - Check and, if necessary, readjust all three stages for maximum output with minimum input from the signal generator.

WARNING - The image signal should be received at approximately 17 megacycles on the dial. If not, the oscillator has been aligned to the image frequency and the oscillator trimmer condenser must be backed out until the correct signal is received at 18 megacycles and the image at approximately 17 megacycles. If readjustment is found necessary, the antenna and radio frequency stage trimmers should also be checked again.

AUTOMATIC VOLUME CONTROL

MODEL 71 CHASSIS A type 6H6 tube is employed as the second detector in a half wave rectifier circuit, the diode plates being connected together. Current flows from the diode plates to the cathode and to ground. Here it is picked up at the point where resistor R-12 is grounded and flows through resistor R-12 and R-13, through the secondary of the second intermediate frequency transformer, back to the plates, thus forming the complete circuit.

The D.C. component of this current produces a voltage drop across resistor R-12 in proportion to the strength of the incoming signal. The grid returns of the 6K7 radio frequency amplifier, the 6A8 pentagrid converter and the 6K7 intermediate frequency amplifier, are connected through the isolating resistors R-5, R-6 and R-21 to the point of juncture between resistors R-12 and R-13, thus adding the voltage drop obtained across resistor R-12 to the fixed bias on the three controlled tubes. Resistor R-12 is also the manual volume control. The audio component of voltage drop across the resistor is taken off on the sliding arm of the control through condenser C-16 and is applied to grid of the type 6F5, first audio amplifier tube.

MODEL 63 CHASSIS The A.V.C. circuit and its operation in the model 63 chassis is identical to that in the model 71. The only differences are in the tubes. A type 75 tube performs the triple function of diode rectifier, automatic volume control and first audio amplifier in place of the type 6H6 tube and the type 6F5 tube in the model 71 chassis. Type 6D6 tubes are found in place of the type 6K7 tubes in the radio frequency and intermediate frequency stages. A type 6A7 pentagrid converter replaces the type 6A8 found in the model 71 chassis.

THE ANTENNA

The most suitable antenna for use in large cities or congested radio districts, where interference is a serious problem, is the doublet. In small centers of population, where interference is not serious, a single wire antenna having a total length of from 75 to 100 feet, erected as high as possible, with a good insulator at each end, will prove satisfactory. The lead-in should go to the receiver by the most direct route and should be kept away, as far as possible, from obstructions. Such an antenna will have less directional properties and less tendency to pick up power line interference than a low antenna with a long horizontal lead.

THE FAIRBANKS-MORSE ANTENNA For those installations where a doublet type antenna is most suitable, FAIRBANKS-MORSE engineers offer the FAIRBANKS-MORSE MODEL 20 NOISE REDUCING ANTENNA SYSTEM. This antenna is especially designed for those receivers and requires no switching arrangement, since it automatically balances itself to the receiver on all bands.

The BLUE wire on the receiver is to be connected to the antenna. The BLACK wire on the receiver is to be connected to the ground. When a FAIRBANKS-MORSE ANTENNA is used, the BLUE wire from the receiver is to be connected to the red wire on the antenna set coupler and the BLACK wire from the receiver is to be connected to the black wire on the antenna set coupler and to a good ground.

POWER TRANSFORMER

Part No. 8629	110 Volt	50-60 cycle
Lead Color	Voltage	Resistance
Black	5.3	.16 ohm
Yellow	5.0	.12 ohm
Brown	110 (Primary)	5.1 ohms
Green	High Voltage	471.3 ohms
Red	Center Tap (Hi-Volt.)	

Part No. 8478	Universal	40-50-60 cycles
Lead Color	Voltage	Resistance
Black	6.3	.16 ohm
Yellow	5.0	.12 ohm
Green	High Voltage	449.5 ohms
Red	Center Tap (Hi-Volt.)	
Brown	Common Primary	
Black & White	100-125 Primary	9.7 ohms
Red & Black	130-155 Primary	13.4 ohms
Brown & White	200-250 Primary	34.6 ohms

Part No. 8593		25 cycle
Lead Color	Voltage	Resistance
Yellow	5.0	.14 ohm
Black	6.3	.16 ohm
Green	High Voltage	642.4 ohms
Red	Center Tap (Hi-Volt.)	
Brown	110 Primary	10.32 ohm

MODEL 64 Auto
MODEL 74 Auto
Schematics
Voltages

FAIRBANKS-MORSE HOME APP., INC.

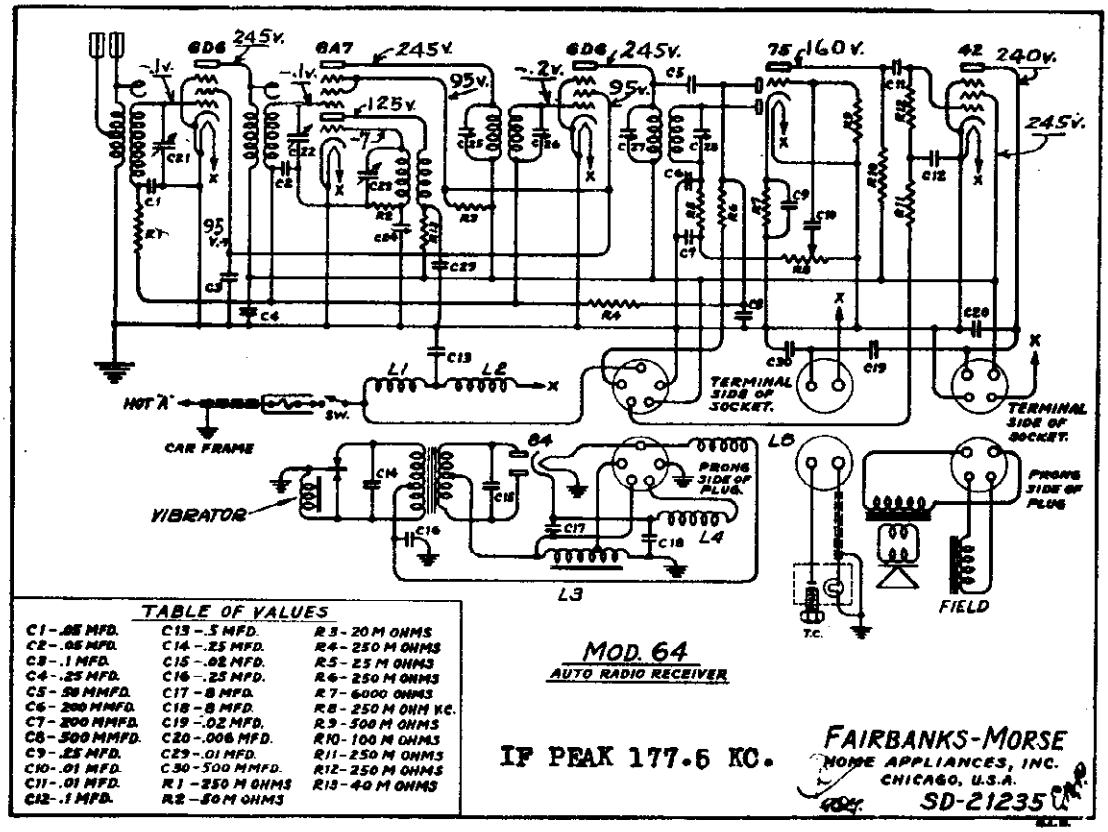

TABLE OF VALUES

C1-.05 MFD.	C13-.5 MFD.	R3-20 M OHMS
C2-.05 MFD.	C14-.25 MFD.	R4-250 M OHMS
C3-.1 MFD.	C15-.02 MFD.	R5-25 M OHMS
C4-.25 MFD.	C16-.25 MFD.	R6-250 M OHMS
C5-50 MMFD.	C17-8 MFD.	R7-6000 OHMS
C6-200 MMFD.	C18-8 MFD.	R8-250 M OHM V.C.
C7-200 MMFD.	C19-.02 MFD.	R9-500 M OHMS
C8-500 MMFD.	C20-.006 MFD.	R10-100 M OHMS
C9-.25 MFD.	C29-.01 MFD.	R11-250 M OHMS
C10-.01 MFD.	C30-500 MMFD.	R12-250 M OHMS
C11-.01 MFD.	R1-250 M OHMS	R13-40 M OHMS
C12-.1 MFD.	R2-50 M OHMS	

MOD. 64
AUTO RADIO RECEIVER

IF PEAK 177.5 KC.

FAIRBANKS-MORSE
HOME APPLIANCES, INC.
CHICAGO, U.S.A.
SD-21235

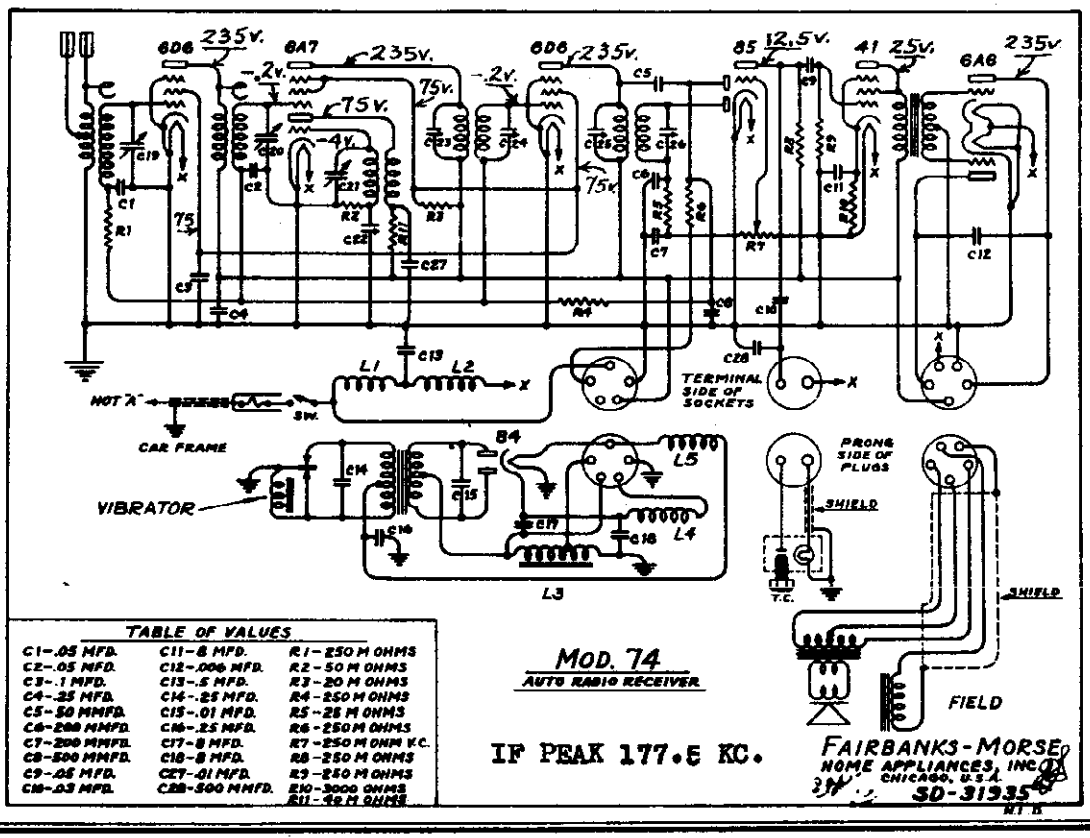

TABLE OF VALUES

C1-.05 MFD.	C11-8 MFD.	R1-250 M OHMS
C2-.05 MFD.	C12-.006 MFD.	R2-50 M OHMS
C3-.1 MFD.	C13-.5 MFD.	R3-20 M OHMS
C4-.25 MFD.	C14-.25 MFD.	R4-250 M OHMS
C5-50 MMFD.	C15-.01 MFD.	R5-25 M OHMS
C6-200 MMFD.	C16-.25 MFD.	R6-250 M OHMS
C7-200 MMFD.	C17-8 MFD.	R7-250 M OHM V.C.
C8-500 MMFD.	C18-8 MFD.	R8-250 M OHMS
C9-.05 MFD.	C27-.01 MFD.	R9-250 M OHMS
C10-.03 MFD.	C28-500 MMFD.	R10-3000 OHMS
		R11-40 M OHMS

MOD. 74
AUTO RADIO RECEIVER

IF PEAK 177.5 KC.

FAIRBANKS-MORSE
HOME APPLIANCES, INC.
CHICAGO, U.S.A.
SD-31935

For Alignment, see Index.

©John F. Rider, Publisher

FAIRBANKS-MORSE HOME APP., INC.

MODEL 66
Schematic
Socket, Trimmers
Voltage, Resistanc

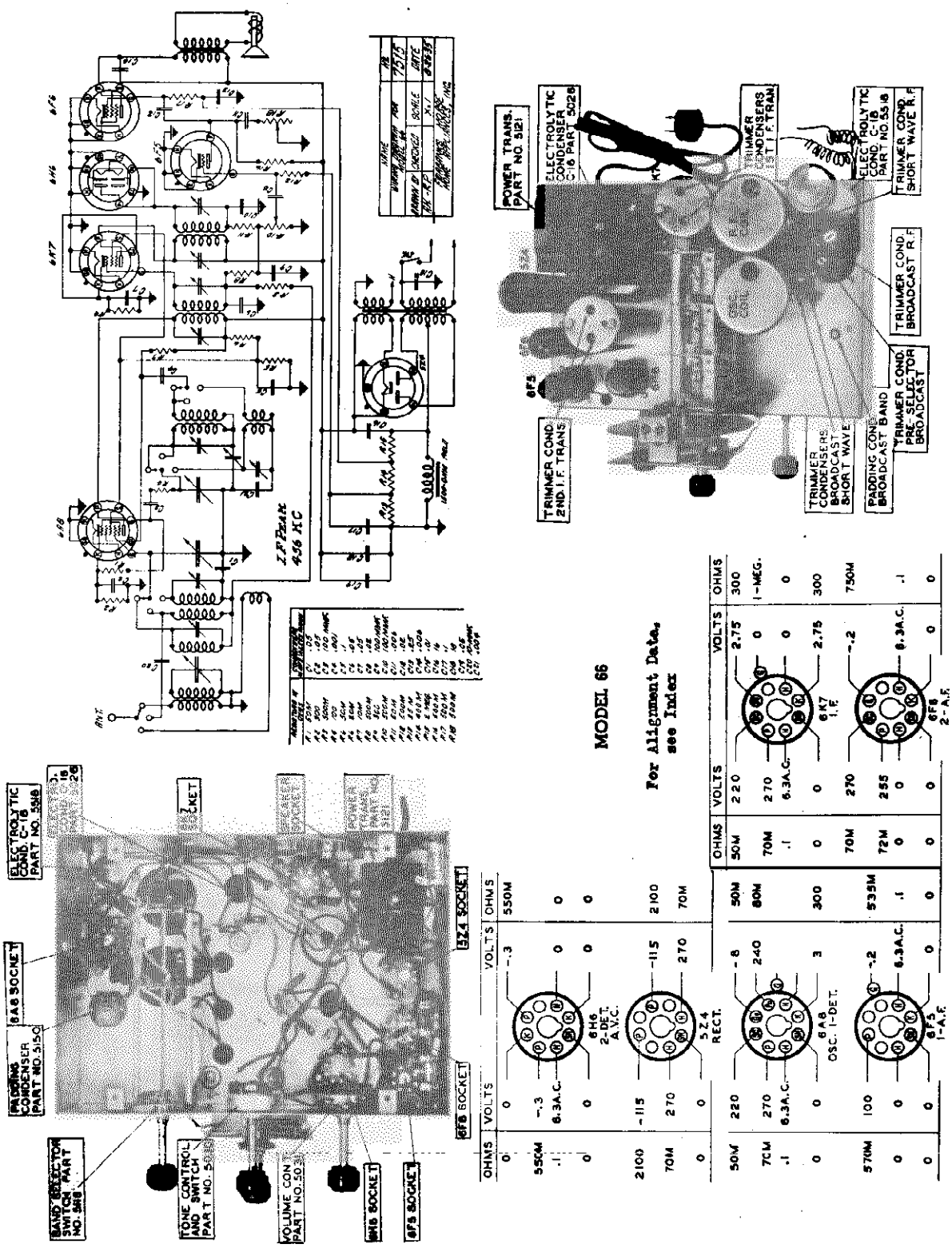

©John F. Rider, Publisher

MODEL 67

Schematic, Voltage Resistance, Socket Trimmers, Chassis

FAIRBANKS-MORSE HOME APP., INC.

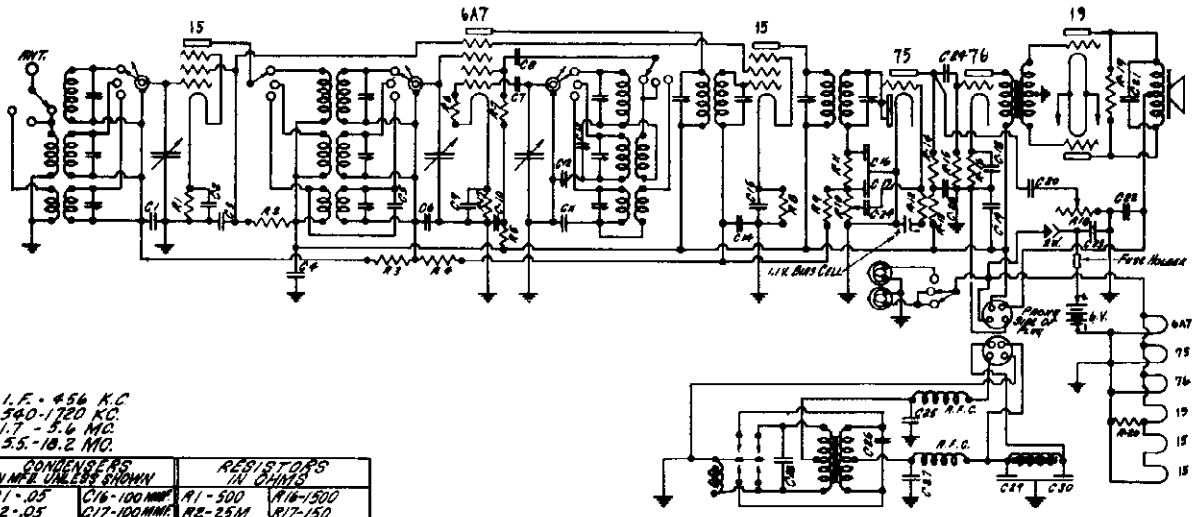

CONDENSERS IN MFD. UNLESS SHOWN		RESISTORS IN OHMS	
C1 - .05	C16 - 100 MMF.	R1 - 500	R16 - 1500
C2 - .05	C17 - 100 MMF.	R2 - 2.5M	R17 - 150
C3 - .1	C18 - 10	R3 - 50M	R18 - 500M
C4 - .25	C19 - .25	R4 - 300M	R19 - 50M
C5 - 15 MMF.	C20 - .006	R5 - 10M	R20 - 100
C6 - .05	C21 - .003	R6 - 50M	
C7 - 100 MMF.	C22 - .25	R7 - 10M	
C8 - .001	C23 - .25	R8 - 500	
C9 - .05	C24 - .02	R9 - 500M	
C10 - 8	C25 - .25	R10 - 50M	
C11 - .001	C26 - .01	R11 - 50M	
C12 - 150 MMF.	C27 - .1	R12 - 50M	
C13 - 500 MMF.	C28 - .25	R13 - 50M	
C14 - .05	C29 - 8	R14 - 250M	
C15 - .05	C30 - 8	R15 - 500M	

MODEL 67 (6 VOLT BATTERY)
RADIO RECEIVER

NAME	NO.
WIRING DIAGRAM FOR MODEL # 67	7522
DRAWN BY	CHECKED BY	SCALE	DATE
R. P.	M. CON	N.F.	11-15-38

FAIRBANKS MORSE HOME APPLIANCES, INC.

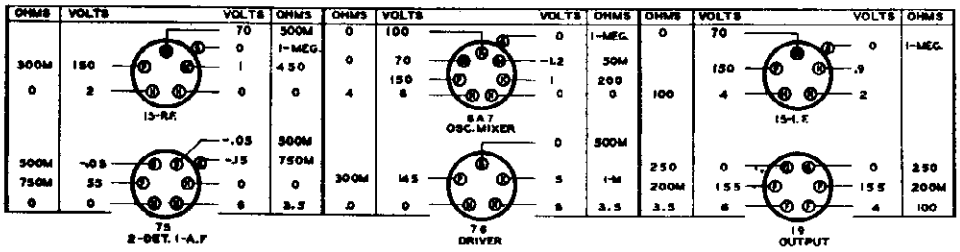

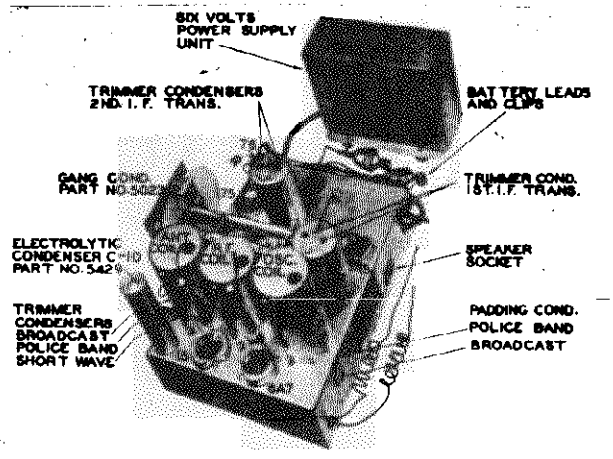

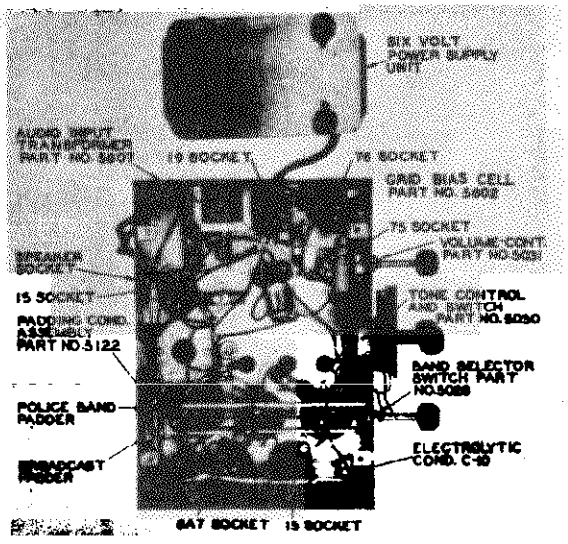

©John F. Rider, Publisher

MODEL 67

TUBES AND CIRCUIT

The information in this service manual covers the model 67, a 6 volt battery operated radio receiver chassis, with a self-contained "B" power supply unit. Many familiar design features that have proven their value over a period of years are combined in this chassis with the latest worthwhile developments of the radio industry and several new developments of the FAIRBANKS-MORSE laboratories.

The model 67 chassis employs a type 15 tube in the radio frequency amplifier stage. The incoming signal is fed to this tube through the antenna coil on each of the three bands. Through the use of this stage, high image and signal to noise ratios are maintained on all bands. Amplification and some selectivity are also realized from this stage.

A type 6A7 pentagrid converter is employed. This tube serves the dual function of first detector and oscillator. A type 15 tube is employed as the intermediate frequency amplifier. This tube and the two special intermediate frequency transformers are responsible for the exceptional selectivity and high gain obtained from the intermediate frequency amplifier.

A type 75 tube performs the triple function of diode detector, automatic volume control and first audio amplifier tube. The output of the triode section of the type 75 tube is resistance coupled to a type 76 tube, which drives a type 19 tube in a class "B" power output stage.

A full-wave synchronous type vibrator is employed in the power supply. This vibrator accomplishes the dual functions of interrupting the primary current and rectifying the secondary current. The power supply unit is housed in an individual container that is separate from the chassis and is connected to the chassis by means of a power supply cable.

AUTOMATIC VOLUME CONTROL

A type 75 tube is employed as the second detector in a half wave rectifier circuit, the diode plates being connected together. Current flows from the diode plates to the cathode and through resistors R-10 and R-11, through the secondary of the second intermediate frequency transformer, back to the plates, thus forming the complete circuit.

The D.C. component of this current produces a voltage drop across resistor R-10 in proportion to the strength of the incoming signal. The grid returns of the type 15 radio frequency amplifier, the type 6A7 pentagrid converter and the type 15 intermediate frequency amplifier are connected through the isolating resistors R-3, R-4 and R-9 to the point of junction between resistors R-10 and R-11, thus adding the voltage drop obtained across resistor R-10 to the fixed bias on the three controlled tubes. The fixed bias is obtained from the individual bias resistors, R-1, R-17 and R-8, located in the cathode circuits of the tubes. Resistor R-10 is also the manual volume control. The audio component of voltage drop across this resistor is taken off on the sliding arm of the control through condenser C-24 and is applied to the grid of the triode section of the tube which serves as the first audio amplifier.

ALIGNMENT PROCEDURE

To insure obtaining the performance the model 67 is capable of delivering, it is essential that it be aligned perfectly. For this reason, it is urged that the following instructions be studied carefully before any alignment adjustments are attempted.

Proper adjustment of the various tuned circuits will only be possible through the use of an accurate and reliable signal generator employed in conjunction with an output meter, which may be connected, through a blocking condenser, from plate to ground on the output tube.

NOTE - All adjustments should be made with the volume control "full on". Any desired variation in signal strength should be obtained by adjusting the output of the signal generator.

INTERMEDIATE FREQUENCY ALIGNMENT

1 - Turn the gang condenser to maximum capacity (fully meshed).

2 - Supply a 486 kilocycle signal from the signal generator to the grid of the type 6A7 first detector tube through a .1 Mfd. condenser connected in series with the signal generator lead.

3 - Adjust the four trimmers of the two intermediate frequency transformers (see Figure 1) for maximum output with minimum input from the service oscillator.

RADIO FREQUENCY ALIGNMENT The parallel or high frequency trimmer condensers for each coil are housed in the same shield can with the coil. These trimmers are used for aligning the high frequency end of each band. The location of the various trimmers is shown in Figure 1.

The oscillator, adjustable, series padding condensers are used for tracking the oscillator at the low frequency end of each band. The padding condenser may be adjusted from the rear of the chassis through the holes indicated in Figure 1. Since a fixed mica padding condenser is employed on the short wave band, no adjustment is necessary. While making padding condenser adjustments, the gang condenser should be rotated back and forth across the signal to insure adjustments to the peak of greatest intensity.

BATTERY AND POWER SUPPLY

BATTERY A storage battery having a capacity of at least 135 ampere hours should be used with the receiver. The storage battery should be located as far from the chassis of the receiver as the battery cables will permit. Attach the long, red lead from the receiver to the positive (+) side of the storage battery. Attach the long, black lead from the receiver to the negative (-) side of the battery.

FUSE In case of difficulty, the fuse located in a metal cartridge near the end of the positive (red) battery lead should be checked. A 15 ampere fuse, FAIRBANKS-MORSE part number 8605, should be used for replacement purposes.

POWER SUPPLY UNIT The power supply unit contains all of the parts of the power supply circuit, including the vibrator. The power supply unit should be located as far from the receiver chassis as the length of the cable will permit. The power supply cable (the cable with a plug on its end) should be plugged into the socket on the side of the power supply unit.

The corrugated fibre container in which the power supply unit is packed is designed to reduce mechanical vibration and noise. For this reason, it should not be removed.

THE WINCHARGER The "Wincharger" is designed to eliminate battery charging difficulties by charging the battery continuously as long as a breeze of sufficient velocity is blowing. Service information concerning this unit must be obtained from the manufacturer, The Wincharger Corporation, 2700 Hawkeye Drive, Sioux City, Iowa.

5 - Tune the receiver to 1.8 megacycles.

6 - Supply a 1.8 megacycle signal to the receiver through the same connections used on the previous adjustment.

7 - Adjust the police band oscillator padding condenser (rear of chassis, see Figure 2) for maximum output with minimum input from the signal generator, at the same time rocking the tuning condenser back and forth across the signal to insure the peak of greatest intensity.

8 - Check at 5.4 megacycles and then at 1.8 megacycles and make any adjustments that are necessary to obtain satisfactory calibration.

SHORT WAVE BAND

1 - Turn the band selector switch to the short wave (clockwise) position.

2 - Tune the receiver to 18 megacycles.

3 - Supply an 18 megacycle signal from the signal generator to the antenna lead of the receiver through a 400 ohm carbon resistor (dummy antenna), connected in series with the signal generator lead.

4 - Turn the short wave antenna stage trimmer (see Figure 1) all the way in and then back it out one turn.

5 - Turn the short wave radio frequency stage trimmer (see Figure 1) all the way in and back it out one-half turn.

6 - Turn the short wave oscillator trimmer (see Figure 1) all the way in and back it out until the 18 megacycle signal from the signal generator is received. The first signal, found at about 17 megacycles, should be the image, the second, should be the 18 megacycle signal.

7 - Check and, if necessary, readjust all three stages for maximum output with minimum input from the signal generator.

WARNING - The image signal should be received at approximately 17 megacycles on the dial. If not, the oscillator has been aligned to the image frequency and the oscillator trimmer condenser must be backed out until the correct signal is received at 18 megacycles and the image at approximately 17 megacycles. If readjustment is found necessary, the antenna and radio frequency stage trimmers should also be checked again.

DIAL ADJUSTMENT Before making any alignment adjustments, close the variable tuning condenser (maximum capacity), loosen the screw that secures the dial pointer, place the pointer in a horizontal position (gang condenser still closed) and tighten the screw.

BROADCAST BAND

1 - Turn the band selector switch to the broadcast (counter-clockwise) position.

2 - Tune the receiver to 1500 kilocycles.

3 - Supply a 1500 kilocycle signal from the signal generator to the antenna lead of the receiver through a standard dummy antenna or a 200 Mmfd. (.0002 Mfd.) condenser, connected in series with the signal generator lead.

4 - Adjust the broadcast band oscillator trimmer condenser (Figure 1) for maximum output with minimum input from the signal generator. Then adjust the broadcast band radio frequency and antenna stage trimmers for maximum output.

5 - Tune the receiver to 600 kilocycles.

6 - Supply a 600 kilocycle signal to the antenna of the receiver through the same connections as previously used.

7 - Adjust the broadcast band oscillator padding condenser (rear of chassis, see Figure 2) for maximum output with minimum input from the signal generator, at the same time rocking the tuning condenser back and forth across the signal to insure the peak of greatest intensity.

8 - Check at 1500 kilocycles and then at 600 kilocycles. Make any adjustments that are necessary to obtain satisfactory calibration.

POLICE BAND

1 - Turn the band selector switch to the police band (center) position.

2 - Tune the receiver to 5.4 megacycles.

3 - Supply a 5.4 megacycle signal from the signal generator to the antenna lead of the receiver through a 400 ohm carbon resistor (dummy antenna), connected in series with the signal generator lead.

4 - Adjust the police band oscillator trimmer condenser (Figure 1) for maximum ouput with minimum input from the signal generator, then adjust the police band radio frequency and antenna stage trimmers for maximum output.

ANTENNA AND GROUND CONNECTIONS

The BLUE wire on the receiver is to be connected to the antenna. The BLACK wire on the receiver is to be connected to the ground. When a FAIRBANKS-MORSE ANTENNA is used, the BLUE wire from the receiver is to be connected to the red wire on the antenna set coupler and the BLACK wire from the receiver is to be connected to the black wire on the antenna set coupler and to a good ground.

NOTE - The antenna lead-in should be placed so as to avoid running close to the battery, power supply UNIT or the cables to avoid pickup from the power supply unit.

MODEL 71
Schematic, Voltage
Socket, Trimmers
Chassis, Resistance

FAIRBANKS-MORSE HOME APP., INC.

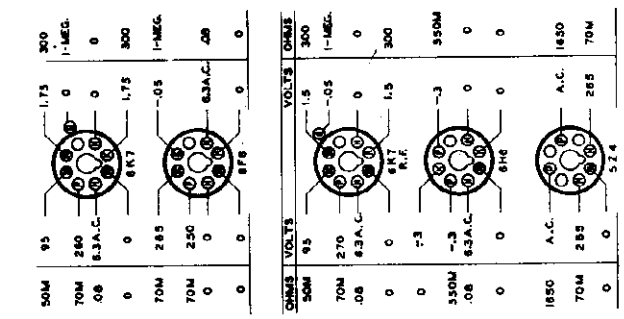

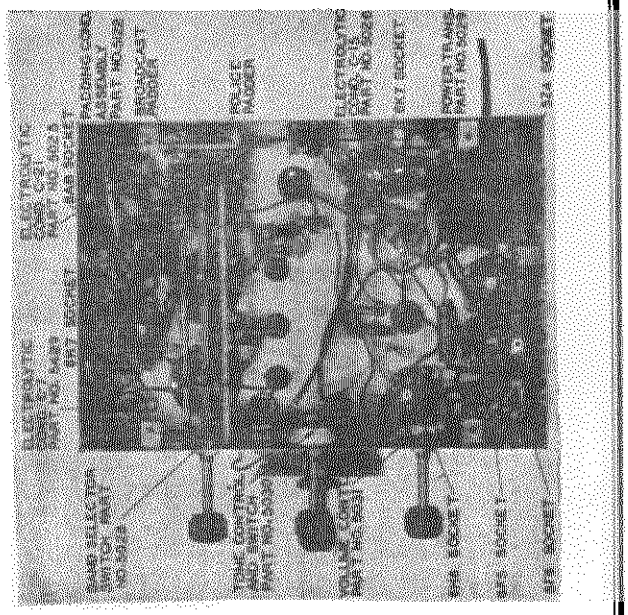

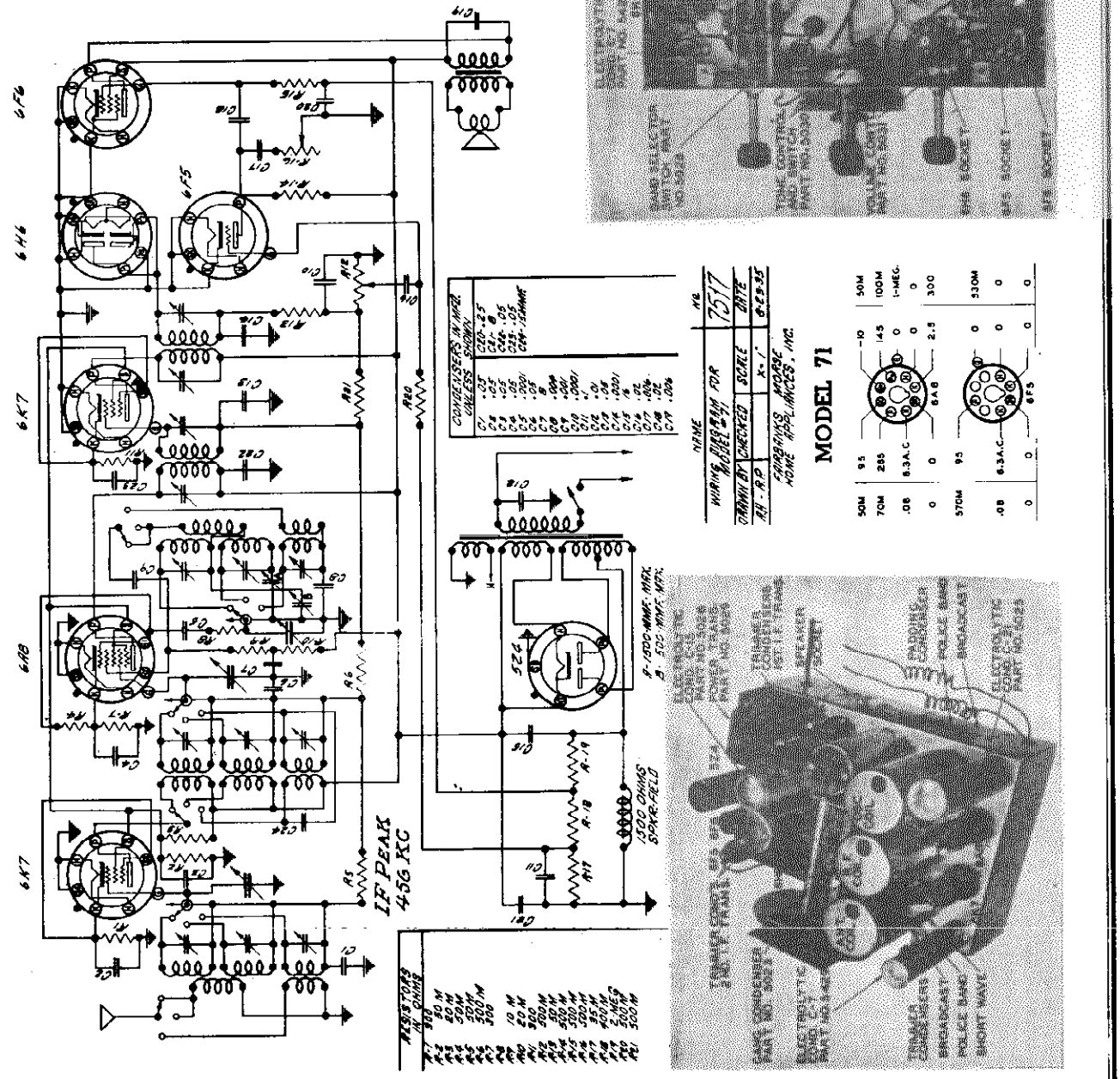

MODEL 82

FAIRBANKS-MORSE HOME APP., INC.

Schematic, Voltage
Socket, Trimmers
Chassis, Resistanc

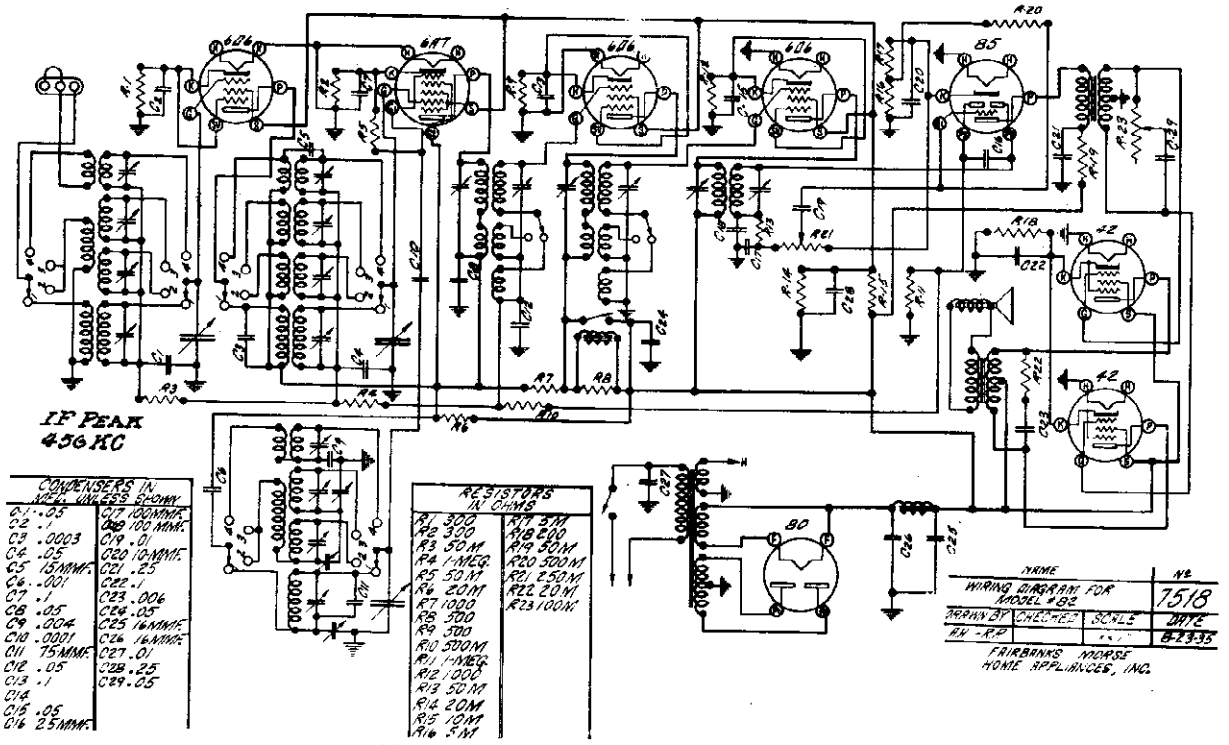

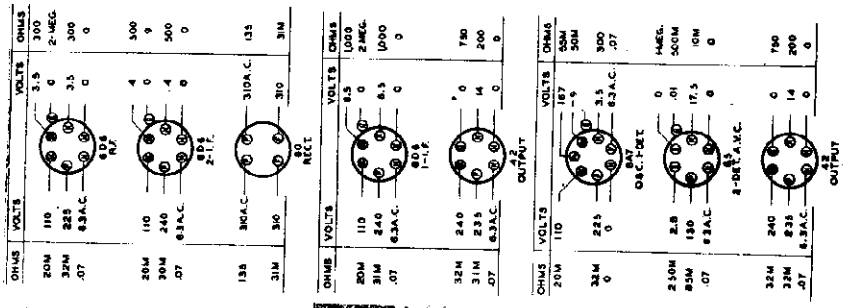

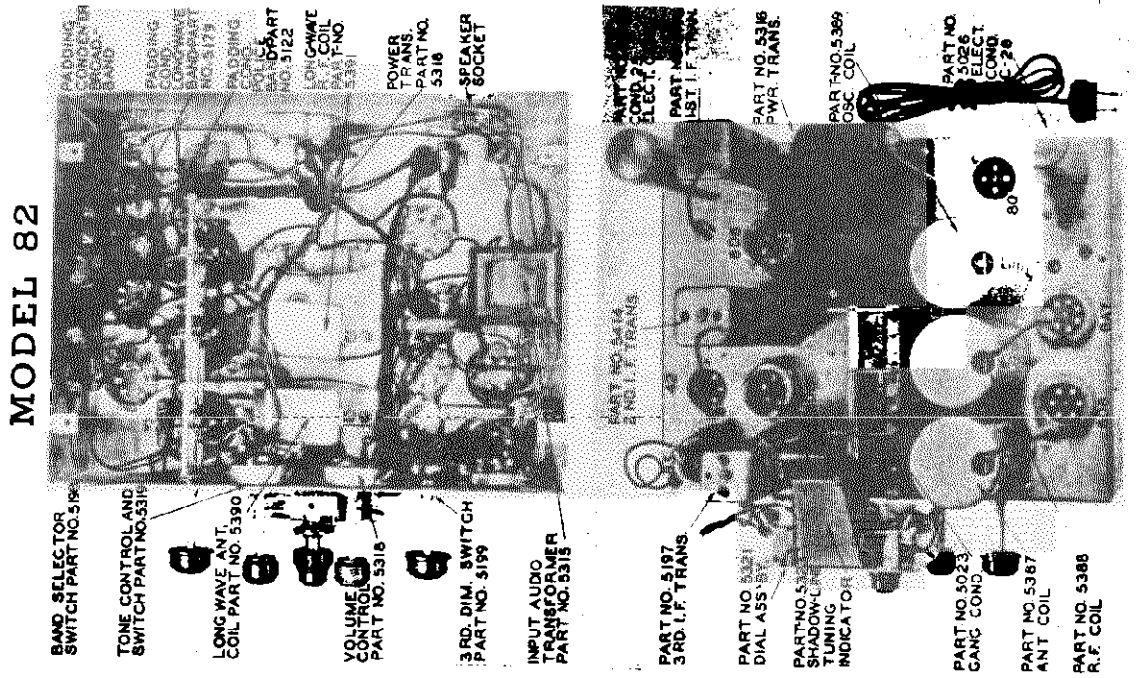

©John F. Rider, Publisher

©John F. Rider, Publisher

MODEL 82 AND 90

ALIGNMENT PROCEDURE

To insure obtaining the performance the models 82 and 90 are capable of delivering, it is essential that they be aligned perfectly. For this reason, it is urged that the following instructions be studied carefully before any alignment adjustments are attempted.

Proper adjustment of the various tuned circuits will only be possible through the use of an accurate and reliable signal generator employed in conjunction with an output meter connected across the voice coil leads of the speaker. In the adjustment of the third intermediate frequency transformer, it is recommended that a cathode ray oscillograph be used for most accurate results.

With the receiver operating on the "Sharp" position, the intermediate frequency amplifier resonance curve will appear on the screen. When the receiver is switched to the "3RD DIMENSION" position, symetrical double humps, approaching a wide flat top resonance curve, should appear in place of the "Sharp" resonance curve (see Figure 10). Each side of the curve should be of equal amplitude. If this is not the case, the trimmers of the third intermediate frequency transformer should be adjusted until the proper curve is obtained. The adjustment of one trimmer, in addition to effecting its own side of the curve, will reflect in the other side and, for this reason, great care must be exercised in making these adjustments.

R.F. ALIGNMENT The parallel or high frequency trimmer condensers for each coil are housed in the same can with the coil. These trimmers are used for aligning the high frequency end of each band. The location of the various coils and their respective trimmers is shown on Figure 8. It is essential that the bands be aligned in the order they appear in the following instructions. In other words, the police band alignment must be completed before the broadcast band alignment is started because of the interlocking effect of the padding condensers on these bands.

Adjustable series padding condensers are used for tracking the oscillator at the low frequency end of each band. The padding condensers may be adjusted from the top of the chassis, through the holes indicated in Figure 8. Since a fixed mica padding condenser is employed on the short wave band, no adjustment is necessary. While making padding condenser adjustments, the gang condenser should be rotated back and forth across the signal to insure adjustment to the peak of greatest intensity.

NOTE: All adjustments, unless otherwise noted, should be made with the volume control "full on". Any desired variation in signal strength should be obtained by adjusting the output of the signal generator.

INTERMEDIATE FREQUENCY ALIGNMENT With the range switch on the broadcast position, the fidelity switch on "Sharp" (clockwise) and the gang condenser closed (maximum capacity), supply a 455 kilocycle signal, stage by stage, to the intermediate frequency amplifier, beginning with the grid of the second intermediate frequency tube. To accomplish this, a .1 Mfd. condenser should be connected between the signal generator supply lead and the second intermediate frequency tube.

The trimmers of the third intermediate frequency transformer (Figure 8) should be adjusted for maximum output with minimum input from the signal generator. Then the signal generator lead should be moved to the first intermediate frequency tube and the trimmers of the second intermediate transformer should be adjusted. The next step is to supply the signal to the grid of the first detector tube and adjust the trimmers of the first intermediate frequency transformer. This method of procedure is essential because of the extreme selectivity of the receiver. After each stage has been aligned, it is well to go back over all adjustments to make sure they are accurate.

The next step in the intermediate frequency alignment is to supply a very strong (about 1000 microvolt) signal to the grid of the first detector tube through the .1 Mfd. condenser. CAUTION: Before the signal is applied to the receiver, the volume control should be retarded to zero. After the signal is applied to the receiver, the volume control should be advanced slowly and carefully until a suitable indication appears on the output meter.

The fidelity switch should be turned to the high fidelity or Third Dimension position. Symetrical double humps should appear, one on each side of where the sharp resonance point appeared on the "Sharp" position (see Figure 10), when the signal generator is tuned approximately 5 kilocycles on each side of the resonance point. The two humps must be of equal amplitude. If this is not the case, the trimmers of the third intermediate frequency transformer must be adjusted until a condition of equal amplitude is obtained. This may be found to be a very difficult adjustment unless an oscillograph is used.

USE OF THE OSCILLOGRAPH A signal generator with a sweep circuit must be employed in making this check. The output of the signal generator should be fed to the grid of the first detector tube in the receiver. The grid clip must be removed from the tube, but, since the first detector is one of the A.V.C. controlled tubes, it is necessary to complete the grid circuit. To accomplish this, connect a large resistor (about 50,000 or 100,000 ohms) between the grid clip and the grid cap of the tube. The low side of the signal generator should be connected to the chassis ground.

The "vertical" binding posts of the oscillograph should be connected to the audio output of the second detector. In the model 82, a type 85 tube serves as a diode rectifier and, in the model 90, a type 6H6 tube is employed. In both of these circuits, R-21 is the manual volume control resistor. The high side connection from the "vertical" plates should be made to the point of juncture between resistors R-21 and R-13. The low side connection may be made to ground. Thus, the audio voltage is applied to the "vertical" plates of the oscillograph.

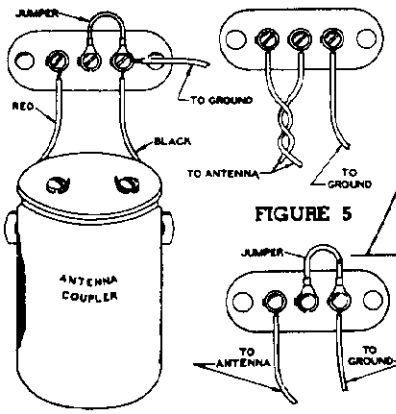

FIGURE 4

FIGURE 5

FIGURE 6

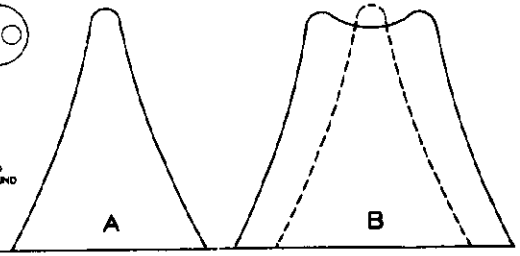

FIGURE 10

ALIGNMENT PROCEDURE (CONTINUED)

POLICE BAND (1.7 to 5.5 Megacycles) With the band selector switch in the police or "P" position and the fidelity switch on the "Sharp" position, supply a 5 megacycle signal from the signal generator to the antenna of the receiver, using a 400 ohm carbon resistor in series with the signal generator lead. Tune the receiver to 5 megacycles and then adjust the oscillator, radio frequency and antenna stage police band trimmers for maximum output with minimum input from the signal generator. WARNING: Care must be exercised to avoid aligning the receiver to the image frequency as outlined under "short wave band".

Supply a 1.8 megacycle signal to the receiver and tune the receiver to 1.8 megacycles. Adjust the police band oscillator padding condenser (located on the chassis at the rear, see Figure 8) for the signal of greatest intensity, rocking the gang condenser back and forth across the signal while making the adjustment. Check at 5 megacycles and then at 1.8 megacycles to correct for any frequency change.

BROADCAST BAND (540 to 1740 Kilocycles) With the band selector switch on the broadcast or "B" position, supply a 1500 kilocycle signal from the signal generator to the receiver, using a standard dummy antenna or a 200 Mmfd. condenser in series between the signal generator and the antenna post of the receiver to serve as the dummy antenna. Make certain that the fidelity switch is on the "Sharp" position.

Tune the receiver to 1500 kilocycles and adjust the radio frequency, antenna and oscillator stage broadcast band trimmers for maximum output with minimum input from the signal generator.

Supply a 600 kilocycle signal to the receiver through the same connections. Tune the receiver to 600 kilocycles. Adjust the broadcast band oscillator padding condenser (located on the chassis at the rear, see Figure 8) for the peak of greatest intensity while rocking the tuning condenser back and forth across the signal. Recheck at 1500 kilocycles and then at 600 kilocycles and make any frequency corrections that appear necessary.

LONG WAVE BAND (140 to 360 kilocycles) With the band selector switch on the long wave or "L" position, supply a 350 kilocycle signal from the signal generator to the antenna of the receiver, using a standard dummy antenna or a 200 Mmfd. condenser in series with the lead. Make sure the fidelity switch is on the "Sharp" position. Tune the receiver to 350 kilocycles and adjust the oscillator, radio frequency and antenna stage trimmer condensers for maximum output with minimum input from the signal generator.

Supply a 175 kilocycle signal to the receiver through the same connections used in the previous adjustment. Tune the receiver to 175 kilocycles. Adjust the long wave oscillator padding condenser for the peak of greatest intensity while rocking the tuning condenser back and forth across the signal. Readjust at 350 kilocycles and then at 175 kilocycles as many times as may be necessary to obtain satisfactory tracking.

SHORT WAVE BAND (5.5 to 18.4 Megacycles) Turn the band selector switch to the short wave or "S" position. Supply an 18 megacycle signal from the signal generator through a 400 ohm carbon resistor (dummy antenna) to the antenna post of the receiver. Tune the receiver to 18 megacycles on the dial. Turn the short wave R.F. trimmer in all the way and then back it out one-half turn. Turn the short wave oscillator trimmer in all the way and then back it out until the 18 megacycle signal (the first signal found at about 17 megacycles should be the image; the second, should be the 18 megacycle signal) from the signal generator is received. Readjust all three short wave trimmers for maximum output with minimum input from the signal generator.

WARNING: The image signal should be received at approximately 17 megacycles after the above adjustments have been made. If it cannot be located, the oscillator has probably been aligned to the image frequency and the oscillator trimmer must be backed out until the proper signal comes in at 18 megacycles and the somewhat weaker image is received at approximately 17 megacycles. If this readjustment is necessary, it will also be necessary to again align all three trimmers for maximum output.

GANG CONDENSER PLATES The adjustments of the various plates of the gang condenser is very critical, since it must be accurate on all bands. These adjustments are made in the factory with precision equipment and under no condition should it be necessary to change them by bending plates.

©John F. Rider, Publisher

MODEL 82 AND 90 RADIO RECEIVER

ANTENNA AND GROUND CONNECTIONS

FAIRBANKS-MORSE ANTENNA A set coupling transformer or coil is supplied with the FAIRBANKS-MORSE antenna kit. This coupler is to be attached to the radio cabinet directly to the rear of the antenna terminals on the chassis. The red lead from the coupler is to be connected to the antenna terminals on the rear of the receiver chassis. The black lead from the coupler is to be attached to the ground terminal on the rear of the receiver chassis. (When the chassis is viewed from the rear, the left hand terminal is Antenna and the right hand terminal is Ground). The connector link or jumper must remain between the center terminal and the ground terminal of the terminal strip (see Figure 4).

ORDINARY DOUBLET ANTENNA When a doublet type of antenna that does not employ coupling transformers is to be used on the receiver, the connector link or jumper should be removed from between the ground terminal and the center terminal on the rear of the chassis. The transmission lines or lead-in wires from the antenna should be connected to the left hand terminal and the center terminal of the terminal strip. The right hand terminal should be used for the ground connection (see Figure 5).

ORDINARY ANTENNA When an ordinary single wire antenna is to be used on the receiver, the antenna lead-in wire should be connected to the left hand terminal on the terminal strip on the rear of the chassis. The connector link or jumper must remain between the center terminal and the ground terminal of the terminal strip (see Figure 6). As a rule, it is a good policy to erect the antenna as high as possible and run the lead-in to the receiver by as direct a route as possible. The most satisfactory antenna for any installation will vary, depending largely upon local structural details and sources of interference. It should be kept as far as possible from buildings, trees and other obstructions. The antenna should not run parallel to nearby power lines and should not run near a tin roof or any metallic structure.

In general, the longer the antenna, the better the results will be on distant stations, especially if the flat portion of the antenna is erected as high as possible. When conditions permit, we recommend an antenna between 75 and 100 feet in length, including the lead-in, and at least 30 feet high.

GROUND CONNECTIONS The ground lead is to be connected to the right hand terminal on the terminal strip located on the rear of the chassis (see Figure 4 and 5).

Since the ground is an essential part of the installation, care must be exercised to see that a good ground is obtained with any type of antenna. In many installations, a satisfactory ground can be made by connecting to a nearby cold water pipe by means of an approved ground clamp. The pipe to which the connection is made should be cleaned thoroughly and scraped or filed bright at the point where the connection is to be made. If no other suitable ground is available, a length of galvanized iron pipe or a ground rod may be driven into moist earth. This usually proves to be a very satisfactory ground.

INTERFERENCE AND THE ANTENNA

The results obtainable from these radio receivers can be no better than the antennae. In order to enjoy the full advantage of 3RD DIMENSION TONE, the background noises ordinarily heard in a radio receiver must be reduced to a minimum. A high order of sensitivity has been incorporated in these radio receivers so that weak, distant stations may be readily tuned in. This also makes the receiver sensitive to such local interference as is given off by vacuum cleaners, door bells, oil burners, elevators and all sorts of small appliances.

It has been found that most of this man-made static travels close to the ground and is picked up on the lead-in of the average antenna. It follows then that, if an antenna could be developed with a special lead-in arrangement that would reject this interference, it would give far better and more noise-free reception than has been possible before.

THE FAIRBANKS-MORSE ANTENNA FAIRBANKS-MORSE engineers offer you just such an antenna as is described in the previous paragraph and, in addition, the FAIRBANKS-MORSE MODEL 20 NOISE REDUCING ANTENNA SYSTEM is especially designed to match the sensitive antenna circuit in these receivers. This assures maximum performance on all wave bands and without the necessity of switching the antenna from band to band, since, through ingenious design, this antenna system automatically balances itself to the receiver on any band. In addition to these features, the antenna is designed to eliminate dead spots and is of the proper length to give maximum results on all wave bands.

THIRD DIMENSION TONE

THIRD DIMENSION TONE is FAIRBANKS-MORSE'S improved high fidelity reproduction. THIRD DIMENSION TONE is designed to bring in a program just as it is rendered before the microphone in the broadcasting station studio. High notes that are not heard on a conventional radio come in with marvelous clearness, giving depth to music.

THIRD DIMENSION TONE is natural, unadulterated quality. It puts nothing into a program that does not exist in the original broadcast. If overtones have been lost in making a radio transcription, in transmission over a broadcast chain, or if the studio or transmitter do not broadcast them, THIRD DIMENSION TONE will not restore the missing musical elements. When listening to programs in which certain notes are missing, little difference will be noted when the switch is turned to the Third Dimension position. However, when the studio program and transmitter are of high quality and when the receiver is located reasonably close to them, the Third Dimension switch will open up a new world of radio realism.

FEATURES The special construction of the audio input transformer and the audio frequency equalizer circuit, both special THIRD DIMENSION TONE features, have been discussed in other paragraphs, but there is still one more outstanding feature that contributes much to make THIRD DIMENSION TONE outstanding over ordinary high fidelity.

In high fidelity transmission, a much wider band is required than has been the case with conventional transmitters in the past. In some cases, a band 30 kilocycles wide is employed, as compared to 10 kilocycles for ordinary transmission. It becomes evident then, that in order to enjoy the advantages of high fidelity transmission, the receiver must accept a band as wide as that being used by the transmitter. However, because only few stations operate high fidelity transmitters as yet and because the number of high quality regular stations is limited, it is necessary to employ an arrangement whereby the receiver may be switched from high fidelity to regular reception or, in other words, from a broad to a selective intermediate Frequency channel at the will of the operator.

I.F. COUPLING CIRCUIT There are numerous ways in which the coupling in the intermediate frequency transformers can be varied to change from a selective to a broad circuit. However to do this without detuning the receiver is a difficult engineering problem. FAIRBANKS-MORSE engineers have developed special first and second intermediate frequency transformers in which the primaries and secondaries are made up of multiple windings and connected in conjunction with a switch so the selectivity may be changed from sharp to broad at will without detuning the receiver.

The secondary of each intermediate frequency transformer is composed of three sections, the upper, center and lower (see Figures 1 and 2). The primary is composed of two sections, the upper and lower. The upper sections of the primary and secondary are loosely coupled to each other and constitute the major portion of the primary and secondary inductance respectively. The lower section of the primary and the center section of the secondary are tightly coupled. The coupling between the lower section of the secondary and the primary is loose. When the switch is on the Third Dimension position, the lower section of the secondary is out of the circuit and the secondary winding is made up of the other two windings, connected in series. Because the coupling between the lower section of the primary and the center section of the secondary is tight, a broad response will result.

When the switch is on the "Sharp" position, the center section of the secondary is cut out of the circuit and the loosely coupled lower section is substituted, thus the selectivity is increased the desired amount. Since the inductance of the center section and the lower section of the secondary are identical, the tuning is not altered when switching from the "Sharp" to the Third Dimension positions. Because of this very practical and unique design, it is possible to arrange the tuning indicator circuit in such a manner that it is only engaged on the "Sharp" position of the switch. This serves to remind the operator that all tuning should be done on the "Sharp" setting to insure perfect resonance and most faithful reproduction.

Alignment Procedure

Models C-6, 64 and 74

General - When making alignment adjustments, the chassis should be placed in a metal case, similar to the regular set case, having suitable holes to make the various trimmers accessible. All adjustments should be made with the volume control advanced to maximum. An output meter and an accurate service oscillator should be used in making all adjustments.

I-F. Alignment - Supply a 177.5 kc. signal from a reliable service oscillator to the grid of the type 6A7 tube through a 200 mmfd. condenser. Set the gang condenser to 1000 kc. Align the four intermediate frequency trimmer condensers for maximum output with minimum input from the service oscillator. The two intermediate frequency transformers are housed in the square cans at the rear and on top of the chassis. The trimmer condensers are accessible through the two round holes in the top of each of these cans. After these adjustments have been made, the trimmers should all be checked again to make sure that the correct peaks have been obtained.

R-F., Oscillator and Antenna Alignment - Set the gang condenser at 1400 kc. Supply a 1400 kc. signal from a reliable service oscillator to the front antenna connector at the left side of the chassis, through a 200 mmfd. condenser. This connection should be made through the standard length of shielded antenna lead-in as supplied with the receiver.

The oscillator high frequency trimmer condenser should be adjusted for maximum output with minimum input from the service oscillator. The oscillator trimmer condenser is located on the rear section of the gang condenser. The r-f. trimmer condenser should next be adjusted in the same manner. This trimmer is located on the center section of the gang condenser. The antenna trimmer is located on the front section of the gang condenser and should be adjusted in the same manner.

Oscillator Padding Condenser Adjustment - Set the gang condenser to 600 kc. Supply a 600 kc. signal to the antenna of the set in the same manner as described in the previous paragraph. Adjust the low frequency padding condenser for maximum output with minimum input from the service oscillator, at the same time rocking the gang condenser back and forth across the signal to make sure the peak of greatest intensity is obtained. The low frequency padding condenser is located at the rear of the left side of the chassis.

Note - After these adjustments have been made, the set should be checked at 1400 kc. to make sure the correct alignment still exists. If not, the oscillator, r-f, and antenna adjustments, as well as the padding condenser adjustments, must be repeated.

TUBES AND CIRCUIT

MODEL 82 CHASSIS The model 82 chassis employs a type 6D6 tube in the radio frequency amplifier stage. The incoming signal is fed to this tube through the antenna coil on each of the four bands. Through the use of this stage, high image and signal to noise ratios are maintained on all bands. Amplification and some selectivity are also realized in this stage.

A type 6A7 pentagrid converter is employed. This tube serves the dual function of first detector and oscillator. The oscillator section of the tube, on all but the long wave band, is connected to a MacNabb constant voltage oscillator circuit. Through the use of both inductive and capacitive coupling, the output of the oscillator remains at a uniform level over the entire frequency range of the band in use. On the long wave band, the oscillator tube works easily and with fairly constant intensity on all frequencies and, for this reason, only capacitive coupling is employed.

Two type 6D6 tubes serve as intermediate frequency amplifiers. These tubes, together with the three intermediate frequency transformers, comprise the I.F. amplifier. Here most of the gain and selectivity of the receiver is realized.

A type 85 tube, connected as a diode, performs the triple function of second detector, automatic volume control and first audio amplifier tube. The output of this tube is coupled to two type 42 tubes, connected as pentodes, in a class "A" output stage. The input transformer is of special design, being wound for low leakage inductance, which makes for high efficiency, high fidelity reproduction. Condenser C-23 and resistor R-22 comprise an audio frequency equaliser circuit connected across the primary of the output transformer. A type 80 full wave rectifier tube is employed in a conventional power supply circuit.

MODEL 90 CHASSIS The model 90 chassis employs a type 6K7 tube in the radio frequency amplifier stage. The pentagrid converter in this chassis is a type 6A8 tube. Two type 6K7 tubes are used in the intermediate frequency amplifier. A type 6H6 diode performs the dual function of second detector and automatic volume control tube. No gain is obtained from this stage and, as a results, a type 6C5 tube is employed as the first audio amplifier, driving two type 6F6 tubes, connected as pentodes, in a class "A" power output stage. In the power supply section, a type 5Z4 tube is connected as a full wave rectifier in a conventional power supply circuit.

AUTOMATIC VOLUME CONTROL

MODEL 90 CHASSIS A type 6H6 tube is employed to perform the dual function of second detector and delayed automatic volume control. In the diode section of this tube, one plate is used for the audio signal, while the other plate is used for A.V.C. The R.F., first detector and first I.F. tubes have a fixed minimum bias applied to their grids, which is obtained from the separate bias resistors (R-1, R-2 and R-5) located in the cathode circuits of the respective tubes. An R.F. voltage is applied to the A.V.C. diode plate from the secondary of the third I.F. transformer, through condenser C-16, is rectified and, in so doing, current flows from the plate to the cathode and to ground, where it is picked up at the point where R-11 is grounded, flows through R-11 and back to the plate, thus forming the complete circuit. This current flow creates a voltage drop across resistor R-11 that is in proportion to the strength of the incoming signal. This voltage is applied to the grids of the controlled tubes, through isolating resistors R-3, R-4 and R-10, and is added to the fixed bias on the tubes, thus producing automatic volume control.

Two resistors (R-16 and R-17) are located between the cathode of the 6H6 tube and ground. The cathode of the 6C5 first audio amplifier is also connected to ground through these resistors, thus the plate current of the 6C5 flows through resistors R-16 and R-17, producing a voltage drop. Half of this drop is applied to the grid of the 6C5, through resistor R-20 and serves as a grid bias. The total drop is applied to the A.V.C. diode plate, thereby biasing it negatively about 10 volts and producing A.V.C. delay.

An R.F. voltage is also applied to the second diode plate from the secondary of the third I.F. transformer. Current flows from the plate to cathode, through resistors R-21 and R-13, through the secondary of the I.F. transformer, back to the plate. This current produces an audio voltage across resistor R-21, the manual volume control. This voltage is taken off through condenser C-19 and is applied to the grid of the first audio amplifier tube. Resistor R-13 and condenser C-17 and C-18 comprise a "tweet" filter circuit.

MODEL 82 CHASSIS The A.V.C. circuit and its operation in the model 82 chassis is identical to that in the model 90. The only differences are in the tubes. In the model 82 chassis, a type 85 tube performs the triple function of diode detector, automatic volume control and first audio amplifier. The connections to the triode section of this tube are the same as those of the type 6C5 tube in the case of the model 90.

TUNING INDICATORS

THE SHADOW LINE TUNING INDICATOR On all model 82 and on some model 90 chassis, the tuning indicator is of the magnetic type, operating a vane in such a manner as to cast a shadow of variable width on the upper portion of the dial. When the shadow is contracted to its narrowest possible dimension, the receiver is properly tuned. This indicator is connected into the circuit as indicated on the schematic diagrams, Figures 1 and 2. It will be noted that the tuning indicator is only in the circuit when the 3rd Dimension switch is on the "Sharp" position. This is intended to encourage tuning only on the "Sharp" position.

The 6E5 is a high vacuum, heater cathode type of cathode ray tube, designed to indicate visually the effect of change in the controlling voltage. The tube, therefore, is a voltage indicator. The visible effect is observed on a flourescent target located in the dome of the bulb. For different controlling voltages, the pattern of the target varies through a shaded angle from 90 degrees to approximately 0 degrees. Exact tuning is indicated by the narrowest shaded angle obtainable.

In the type 6E5, the cathode provides a source of electrons. These are attracted to the positively-charged target (T), (see Figure 3). Electrons impinging on the coated target cause it to glow. The extent of flourescent area is controlled by means of the "ray-control electrode" which is an extension of the triode plate (P). The voltage on the ray-control electrode is determined by the voltage applied to the grid (G) of the triode. This voltage is obtained by tapping the A.V.C. circuit between resistors R-10 and R-11 by means of a voltage divider network consisting of two 1 megohm resistors, R-24 and R-25, connected in series to ground. Through this arrangement, the grid of the 6E5 tube has half of the control voltage applied to it. The target is connected to the high voltage supply at the same point where the first intermediate frequency tube "B" supply lead is connected.

A series resistor R-26 is connected between the triode plate and the high voltage supply. The effect of the series resistor is to reduce the voltage applied to the triode plate and, consequently, to the ray-control electrode, under conditions of decreased triode grid bias (increased triode plate current). Under these conditions, the flourescent area on the target will become wider. For conditions of increasing triode grid bias (decreasing triode-plate current), the triode plate voltage increases and approaches the value of the supply voltage. Under these conditions, the flourescent area on the target will be-deen narrower, indicating that the receiver is approaching the resonance point.

The 6E5 is so connected that it operates only when the receiver is switched to "Sharp". When the receiver is switched to "3rd DIMENSION", the grid circuit is grounded, thus rendering the tube inoperative. A condenser C-31 is connected as a filter from the point of juncture between resistors R-24 and R-25 to ground, thus preventing audio voltage from entering the tube.

THE CATHODE RAY TUNING INDICATOR On some model 90 chassis, an electron ray or cathode ray tube tuning indicator, known as the 6E5, is employed. The connections for this tube are shown in Figure 3.

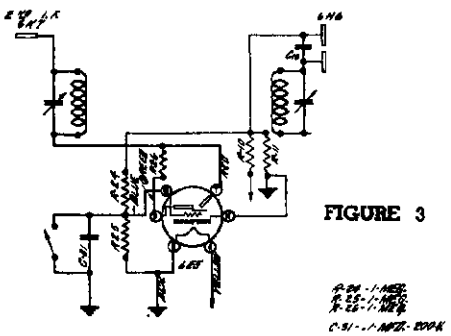

CATHODE RAY TUNING INDICATOR USED ON MODEL 90

MODEL 82 AND 90

RADIO RECEIVER

FIGURE 3

POWER TRANSFORMERS

Part No. 5316	110 Volt	50-60 cycle
Lead Color	Voltage	Resistance
Black	6.3	.14 ohm
Blue	5.0	.22 ohm
Brown	110 (Primary)	5.3 ohms
Yellow	High Voltage	271.8 ohms
Green & Yellow	Center Tap (Hi-Volt.)	

Part No. 5514	Universal	40-50-60 cycle
Lead Color	Voltage	Resistance
Black	6.3	.14 ohm
Blue	5.0	.22 ohm
Yellow	High Voltage	251. ohms
Green & Yellow	Center Tap (Hi-Volt.)	
Brown	Common Primary	
Black & White	100-125 Primary	4.8 ohms
Black & Red	130-155 Primary	6.7 ohms
Brown & White	200-250 Primary	17.2 ohms

Part No. 5594		25 cycle
Lead Color	Voltage	Resistance
Black	6.3	.14 ohm
Blue	5.0	.22 ohm
Yellow	High Voltage	269.8 ohms
Green & Yellow	Center Tap (Hi-Volt.)	
White	110 Primary	4.3 ohms

©John F. Rider, Publisher

MODEL 90
Schematic, Voltage
Socket, Trimmers
Chassis, Resistance

FAIRBANKS-MORSE HOME APP., INC.

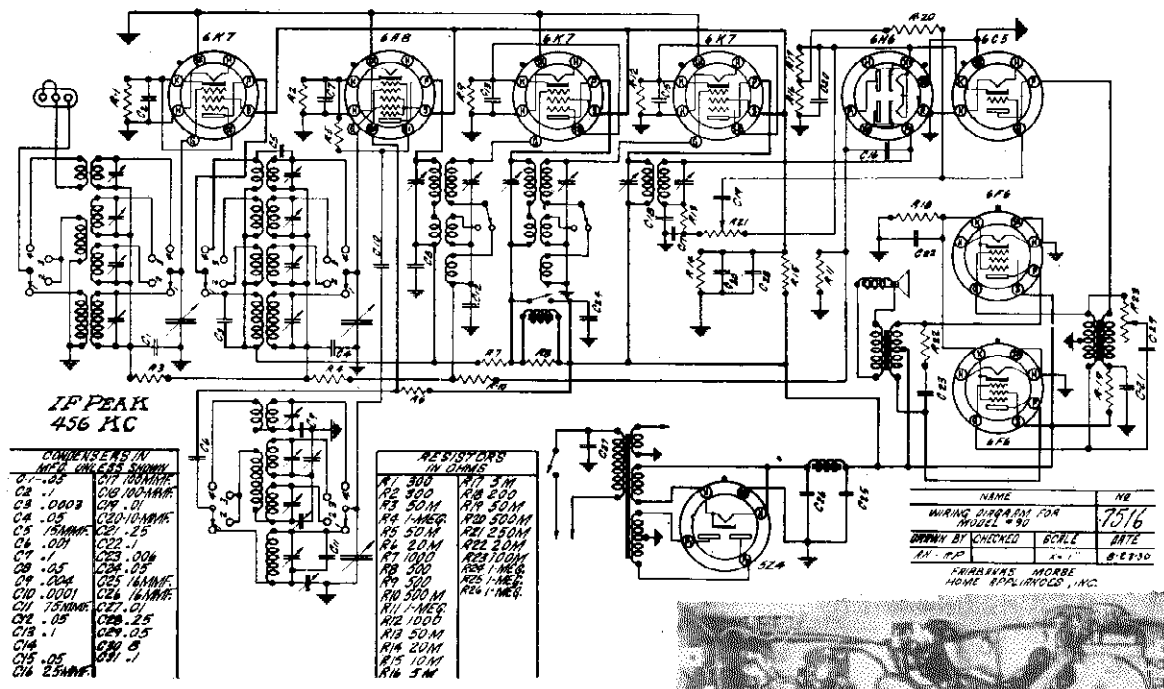

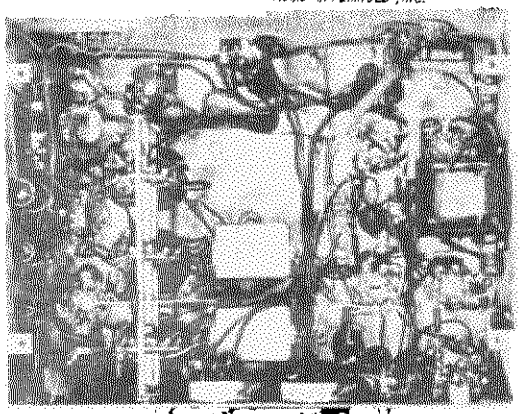

FOR ALIGNMENT DATA SEE INDEX

MODEL 90 10-TUBE

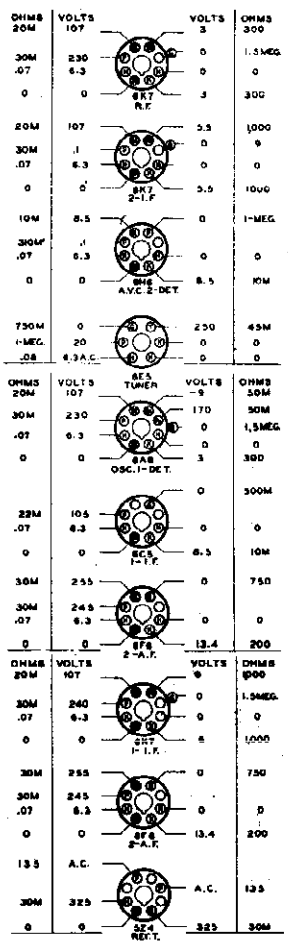

MODEL 90 9-TUBE

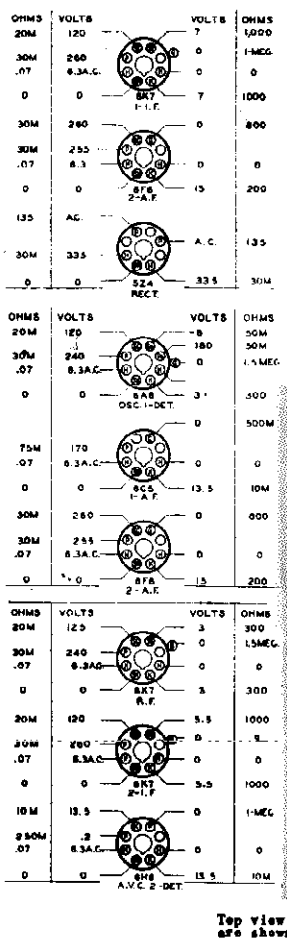

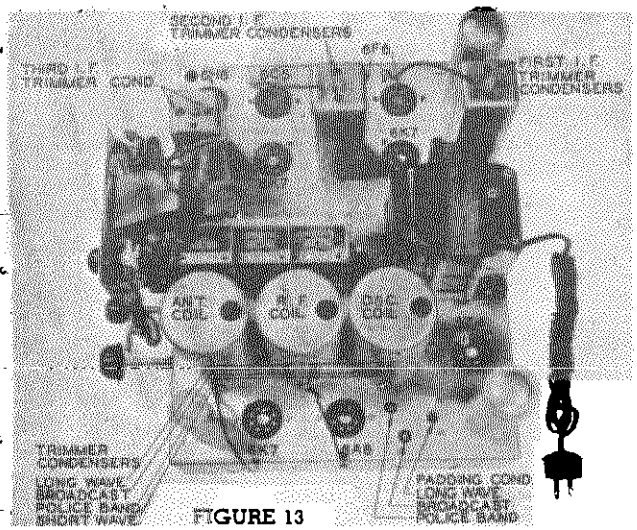

FIGURE 13

Top view of the model 90 chassis, employing Shadow Line Tuning. The tube locations are shown and the locations of the various trimmers are indicated.

©John F. Rider, Publisher

MODEL 100
Schematic, Voltage
Socket, Trimmers
Chassis, Resistance

FAIRBANKS-MORSE HOME APP., INC.

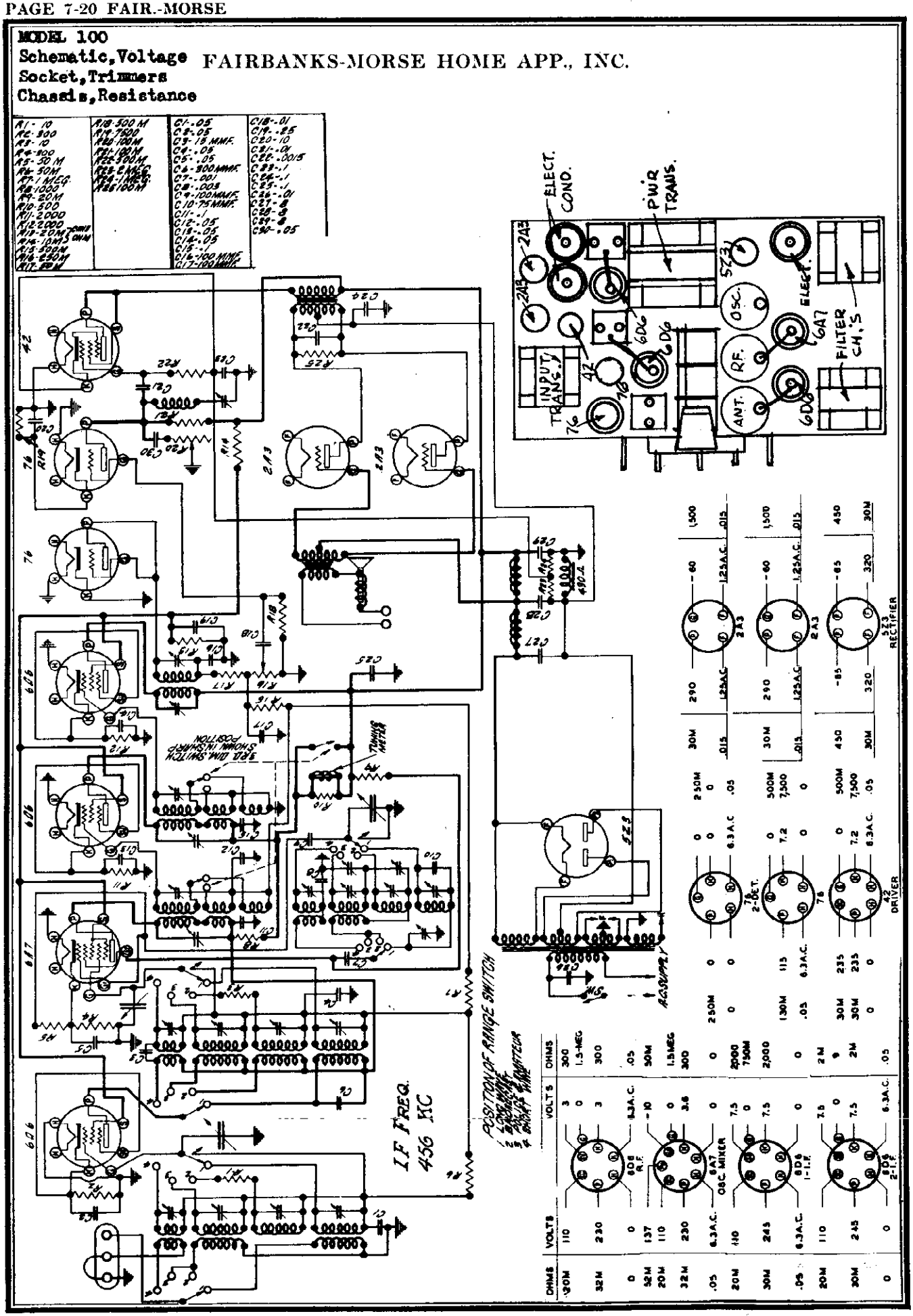

©John F. Rider, Publisher

TUBES AND CIRCUIT

MODEL 100 CHASSIS The model 100 chassis employs a type 6D6 tube in the radio frequency amplifier stage. The incoming signal is fed to this tube through the antenna coil on each of the four bands. Through the use of this stage, high image and signal to noise ratios are maintained on all bands. Amplification and some selectivity are also realized in this stage.

A type 6A7 pentagrid converter is employed. This tube serves the dual function of first detector and oscillator. The oscillator section of the tube,on all but the long wave band, is connected to a MacNabb constant voltage oscillator circuit. Through the use of both inductive and capacitive coupling, the output of the oscillator remains at a uniform level over the entire frequency range of the band in use. On the long wave band, the oscillator tube works easily and with fairly constant intensity on all frequencies and, for this reason, only capacitive coupling is employed.

Two type 6D6 tubes serve as intermediate frequency amplifiers. These tubes, together with the three intermediate frequency transformers, comprise the I.F. amplifier. Here most of the gain and selectivity of the receiver is realized.

A type 76 tube, connected as a diode, performs the dual function of second detector and automatic volume control tube. Since no gain is obtained from this stage, the output is resistance coupled to another type 76 tube that serves as an audio amplifier. The output of this tube is, in turn, resistance coupled to a type 42 tube, connected as a triode, driving two type 2A3 tubes in a class "A" output stage.

The input transformer is of special design, being wound for low leakage inductance, which makes for high efficiency high fidelity reproduction. Condenser C-22 and Resistor R-25 comprise an audio frequency equalizer circuit connected across the secondary of the input transformer. A type 5Z3 full wave rectifier tube is employed in a conventional power supply circuit.

MODEL 110 CHASSIS The model 110 chassis employs a type 6K7 tube in the radio frequency amplifier stage. The pentagrid converter in this chassis is a type 6A8 tube. Two type 6K7 tubes are used in the intermediate frequency amplifier. A type 6H6 diode, connected as a half wave rectifier, performs the dual function of second detector and automatic volume control tube. As in the case of the type 76 tube in the model 100 chassis, no gain is obtained from this stage and, as a result,a type 6C5 tube is employed as the first audio amplifier. A type 6F6 tube, connected as a triode, is the second audio frequency amplifier, driving two type 2A3 tubes in a class "A" power output stage.

In the power supply section, two type 5Z4 tubes, each connected as a half wave rectifier, are employed in a full wave rectifier circuit. By connecting the rectifier tubes in this manner, the drain on each tube is reduced, thus lessening the possibility of difficulty and assuring better regulation than if only one rectifier were used to supply the entire current requirements of the receiver.

TUNING INDICATORS

THE SHADOW LINE TUNING INDICATOR On all model 100 and on some model 110 chassis, the tuning indicator is of the magnetic type,operating a vane in such a manner as to cast a shadow of variable width on the upper portion of the dial. When the shadow is contracted to its narrowest possible dimension, the receiver is properly tuned. This indicator is connected into the circuit as indicated on the schematic diagrams, Figures 1 and 2. It will be noted that the tuning indicator is only in the circuit when the 3rd Dimension switch is on the "Sharp" position. This is intended to encourage tuning only on the "Sharp" position.

THE CATHODE RAY TUNING INDICATOR On some model 110 chassis,an electron ray or cathode ray tube tuning indicator, known as the 6E5, is employed. The connections for this tube are shown in Figure 3.

The 6E5 is a high vacuum, heater cathode type of cathode ray tube, designed to indicate visually the effect of change in the controlling voltage. The tube, therefore, is a voltage indicator. The visible effect is observed on a flourescent target located in the dome of the bulb. For different controlling voltages, the pattern of the target varies through a shaded angle from 90 degrees to approximately 0 degrees. Exact tuning is indicated by the narrowest shaded angle obtainable.

In the type 6E5, the cathode provides a source of electrons. These are attracted to the positively-charged target (T), (see Figure 3). Electrons impinging on the coated target cause it to glow. The extent of flourescent area is controlled by means of the "ray control electrode", which is an extension of the triode plate(P). The voltage on the ray control electrode is determined by the voltage applied to the grid (G) of the triode. This voltage is obtained by tapping the A.V.C. circuit between resistors R-16 and R-17 by means of a voltage divider network consisting of two 1 megohm resistors(R-26 and R-27) connected in series to ground. Through this arrangement, the grid of the 6E5 tube has half of the control voltage applied to it. The target is connected to the high voltage supply at the same point where the first intermediate frequency tube "B" supply lead is connected.

A series resistor R-28 is connected between the triode plate and the high voltage supply. The effect of the series resistor is to reduce the voltage applied to the triode plate and, consequently, to the ray-control electrode,under conditions of decreased triode grid bias (increased triode plate current). Under these conditions, the flourescent area on the target will become wider. For conditions of increasing triode grid bias (decreasing triode-plate current), the triode plate voltage increases and approaches the value of the supply voltage. Under these conditions, the flourescent area on the target will become narrower, indicating that the receiver is approaching the resonance point.

The 6E5 is so connected that it operates only when the receiver is switched to "Sharp". When the receiver is switched to "3rd DIMENSION", the grid circuit is grounded, thus rendering the tube inoperative. A condenser C-31 is connected as a filter from the point of juncture between resistors R-26 and R-27 to ground, thus preventing audio voltage from entering the tube.

LONG WAVE BAND (140 to 360 Kilocycles) With the band selector switch on the long wave or "L" position,supply a 350 kilocycle signal from the signal generator to the antenna of the receiver, using a standard dummy antenna or a 200 Mmfd. condenser in series with the lead. Make sure the fidelity switch is on the "Sharp" position. Tune the receiver to 350 kilocycles and adjust the oscillator, radio frequency and antenna stage trimmer condensers for maximum output with minimum input from the signal generator.

Supply a 175 kilocycle signal to the receiver through the same connections used in the previous adjustment. Tune the receiver to 175 kilocycles. Adjust the long wave oscillator padding condenser for the peak of greatest intensity while rocking the tuning condenser back and forth across the signal. Readjust at 350 kilocycles and then at 175 kilocycles as many times as may be necessary to obtain satisfactory tracking.

SHORT WAVE BAND (5.5 to 18.4 Megacycles) Turn the band selector switch to the short wave or "S" position. Supply an 18 megacycle signal from the signal generator through a 400 ohm carbon resistor (dummy antenna) to the antenna post of the receiver. Tune the receiver to 18 megacycles on the dial. Turn the short wave R.F. trimmer in all the way and then back it out one-half turn. Turn the short wave oscillator trimmer in all the way and then back it out until the 18 megacycle signal (the first signal found at about 17 megacycles should be the image; the second, should be the 18 megacycle signal) from the signal generator is received. Readjust all three short wave trimmers for maximum output with minimum input from the signal generator.
WARNING: The image signal should be received at approximately 17 megacycles after the above adjustments have been made. If it cannot be located, the oscillator has probably been aligned to the image frequency and the oscillator trimmer must be backed out until the proper signal comes in at 18 megacycles and the somewhat weaker image is received at approximately 17 megacycles. If this readjustment is necessary, it will also be necessary to again align all three trimmers for maximum output.

GANG CONDENSER PLATES The adjustment of the various plates of the gang condenser is very critical, since it must be accurate on all bands. These adjustments are made in the factory with precision equipment and under no condition should it be necessary to change them by bending plates.

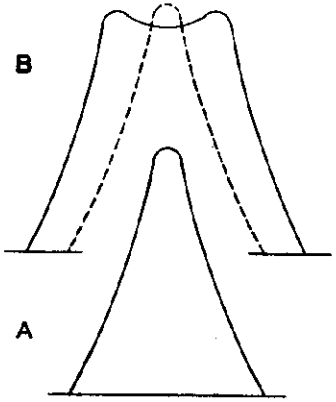

SELECTIVITY CURVES

FIGURE 13

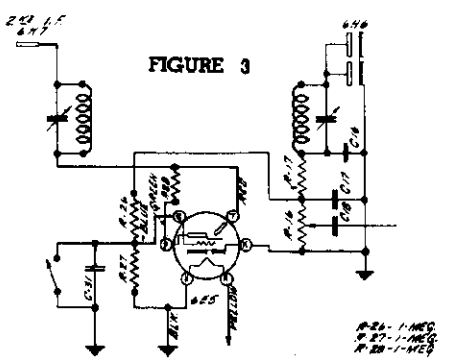

FIGURE 3

CATHODE RAY TUNING INDICATOR USED ON MODEL 110

AUTOMATIC VOLUME CONTROL

MODEL 110 CHASSIS A type 6H6 tube is employed as the second detector in a half wave rectifier circuit, the diode plates being connected together. Current flows from the diode plates to the cathode and to ground. Here it is picked up at the point where resister R-16 is grounded and flows through resistors R-16 and R-17, through the secondary of the third intermediate frequency transformer back to the plates,thus forming the complete circuit.

The DC component of this current produces a voltage drop across resistor R-16 in proportion to the strength of the incoming signal. The grid returns of the 6K7 radio frequency amplifier, the 6A8 pentagrid converter and the 6K7 first intermediate frequency amplifier are connected, through the isolating resistors R-6, R-7 and R-15, to the point of juncture between resistors R-16 and R-17,thus adding the voltage drop obtained across resistor R-16 to the fixed bias on the three controlled tubes. The fixed bias is obtained from the individual bias resistors R-2, R-4 and R-11, located in the cathode circuits of the tubes. Resistor R-16 is also the manual volume control. The audio component of the voltage drop cross this resistor is taken off on the sliding arm of the control through condenser C-18 and is applied to the grid of the 6C5 audio amplifier tube.

MODEL 100 CHASSIS The A.V.C. circuit and its operation in the model 100 chassis is identical to that in the model 110. The only differences are in the tubes. A type 76 tube is employed as the diode rectifier in place of the 6H6. A type 76 tube is also used as the first audio amplifier in place of the 6C5 metal tube. Type 6D6 tubes will be found in place of type 6K7 tubes in the radio frequency and intermediate frequency amplifier stages. A 6A7 pentagrid converter replaces the 6A8 found in the model 110.

ALIGNMENT PROCEDURE

To insure obtaining the performance the models 100 and 110 are capable of delivering, it is essential that they be aligned perfectly. For this reason, it is urged that the following instructions be studied carefully before any alignment adjustments are attempted.

Proper adjustment of the various tuned circuits will only be possible through the use of an accurate and reliable signal generator employed in conjunction with an output meter connected across the voice coil leads of the speaker. In the adjustment of the third intermediate frequency transformer, it is recommended that a cathode ray oscillograph be used for most accurate results.

NOTE: All adjustments, unless otherwise noted, should be made with the volume control "full on". Any desired variation in signal strength should be obtained by adjusting the output of the signal generator.

INTERMEDIATE FREQUENCY ALIGNMENT With the range switch on the broadcast position, the fidelity switch on "Sharp" (clockwise)and the gang condenser closed (maximum capacity), supply a 456 kilocycle signal, stage by stage,to the intermediate frequency amplifier, beginning with the grid of the second intermediate frequency tube. To accomplish this, a .1 Mfd. condenser should be connected between the signal generator supply lead and the second intermediate frequency tube.

The trimmers of the third intermediate frequency transformer (Figure 6)should be adjusted for maximum output with minimum input from the signal generator. Then the signal generator lead should be moved to the first intermediate frequency tube and the trimmers of the second intermediate transformer should be adjusted. The next step is to supply the signal to the grid of the first detector tube and adjust the trimmers of the first intermediate frequency transformer. This method of procedure is essential because of the extreme selectivity of the receiver. After each stage has been aligned,it is well to go back over all adjustments to make sure they are accurate.

The next step in the intermediate frequency alignment is to supply a very strong (about 1000 microvolts) signal to the grid of the first detector tube through the .1 Mfd. condenser. CAUTION: Before the signal is applied to the receiver, the volume control should be retarded to zero. After the signal is applied to the receiver, the volume control should be advanced slowly and carefully until a suitable indication appears on the output meter.

The fidelity switch should be turned to the high fidelity or Third Dimension position. Symetrical double humps should appear, one on each side of where the sharp resonance point appeared on the "Sharp" position (see Figure 13), when the signal generator is tuned approximately 2 kilocycles on each side of the resonance point. The two humps must be of equal amplitude. If this is not the case, the trimmers of the third intermediate frequency transformer must be adjusted until a condition of equal amplitude is obtained. This may be found to be a very difficult adjustment unless an oscillograph is used.

USE OF THE OSCILLOGRAPH A signal generator with a sweep circuit must be employed in making this check. The output of the signal generator should be fed to the grid of the first detector tube in the receiver. The grid clip must be removed from the tube, but, since the first detector is one of the A.V.C. controlled tubes, it is necessary to complete the grid circuit. To accomplish this, connect a large resistor (about 50,000 or 100,000 ohms) between the grid clip and the grid cap of the tube. The low side of the signal generator should be connected to the chassis ground.

The "vertical" binding posts of the oscillograph should be connected to the audio output of the second detector. In the model 100, a type 76 tube serves as a diode rectifier and in the model 110, a type 6H6 tube is employed. In both of these circuits, R-16 serves the dual purpose of manual and automatic volume control resistor. The high side connection from the "vertical" plates should be made to the point of juncture between resistors R-15, R-16 and R-17. The low side connection may be made to ground. Thus, the audio voltage is applied to the "vertical" plates of the oscillograph.

With the receiver operating on the "Sharp" position, the intermediate frequency amplifier resonance curve will appear on the screen. When the receiver is switched to the "3RD DIMENSION" position, symetrical double humps, approaching a wide flat top resonance curve, should appear in place of the "Sharp" resonance curve (see Figure 13). Each side of the curve should be of equal amplitude. If this is not the case, the trimmers of the third intermediate frequency transformer should be adjusted until the proper curve is obtained. The adjustment of one trimmer, is addition to effecting its own side of the curve, will reflect in the other side and, for this reason, great care must be exercised in making these adjustments.

R.F. ALIGNMENT The parallel or high frequency trimmer condensers for each coil are housed in the same can with the coil. These trimmers are used for aligning the high frequency end of each band. The location of the various coils and their respective trimmers is shown on Figure 6. It is essential that the bands be aligned in the order they appear in the following instructions. In other words, the police band alignment must be completed before the broadcast band alignment is started because of the interlocking effect of the padding condensers on these bands.

Adjustable series padding condensers are used for tracking the oscillator at the low frequency end of each band. The padding condensers may be adjusted from the top of the chassis, through the holes indicated in Figure 6. Since a fixed mica padding condenser is employed on the short wave band, no adjustment is necessary. While making padding condenser adjustments, the gang condenser should be rotated back and forth across the signal to insure adjustment to the peak of greatest intensity.

DIAL ADJUSTMENT Before making any radio frequency alignment adjustments, close the variable tuning condenser (maximum capacity) and adjust the black dial pointer to a horizontal position (gang condenser still closed).

POLICE BAND (1.7 to 5.5 Megacycles) With the band selector switch in the police or "P" position and the fidelity switch on the "Sharp" position, supply a 5 megacycle signal from the signal generator to the antenna of the receiver, using a 400 ohm carbon resistor in series with the signal generator lead. Tune the receiver to 5 megacycles and then adjust the oscillator, radio frequency and antenna stage police band trimmers for maximum output with minimum input from the signal generator. WARNING: Care must be exercised to avoid aligning the receiver to the image frequency as outlined under "short wave band".

Supply a 1.8 megacycle signal to the receiver and tune the receiver to 1.8 megacycles. Adjust the police band oscillator padding condenser (located on the chassis at the rear, see Figure 6) for the signal of greatest intensity, rocking the gang condenser back and forth across the signal while making the adjustment. Check at 5 megacycles and then at 1.8 megacycles to correct for any frequency change.

BROADCAST BAND (540 to 1740 Kilocycles) With the band selector switch on the broadcast or "B" position, supply a 1500 kilocycle signal from the signal generator to the receiver, using a standard dummy antenna or a 200 Mmfd. condenser in series between the signal generator and the antenna post of the receiver to serve as the dummy antenna. Make certain that the fidelity switch is on the "Sharp" position.

Tune the receiver to 1500 kilocycles and adjust the radio frequency, antenna and oscillator stage broadcast band trimmers for maximum output with minimum input from the signal generator.

Supply a 600 kilocycle signal to the receiver through the same connections. Tune the receiver to 600 kilocycles. Adjust the broadcast band oscillator padding condenser (located on the chassis at the rear, see Figure 6) for the peak of greatest intensity while rocking the tuning condenser back and forth across the signal. Recheck at 1500 kilocycles and then at 600 kilocycles and make any frequency corrections that appear necessary.

10 KILOCYCLE AUDIO TRAP

Because of the band width necessary to obtain high fidelity reproduction, if a station is operating on a channel adjacent to the station channel being listened to, a 10 kilocycle beat (high pitched whistle) may be heard in the background. To reduce the possibility of this interference, Fairbanks-Morse engineers have developeda 10 kilocycle wave trap, found in the models 100 and 110 chassis. This trap circuit consists of a large, air core choke coil (see Figure 4), and a variable condenser, connected in series. This trap is connected from the plate of the first audio amplifier tube to ground.

ADJUSTMENT It should not be necessary to adjust the trap circuit unless either the choke coil or condenser has been replaced. To adjust the trap, tune in on two adjacent channels on which two distant stations are operating. Turn the selectivity switch to the 3RD DIMENSION POSITION. Tune the interfering whistle to its loudest point by tuning between the two stations. Adjust the 10 kilocycle trap trimmer, located on the front of the chassis (see Figure 4), until the whistle is reduced to a minimum.

POWER TRANSFORMERS

Part No. 5410	110 Volt	50-60 cycle
Lead Color	**Voltage**	**Resistance**
Black	2.5	.03 ohm
Black & Yellow	Center Tap (2.5 volt)	
Blue	5.0	.05 ohm
Green	6.3	.10 ohm
White	110 (Primary)	1.79 ohms
Yellow	High Voltage	115.3 ohms
Green & Yellow	Center Tap (Hi-Volt.)	
Part No. 5566	**Universal**	**40-50-60 cycle**
Lead Color	**Voltage**	**Resistance**
Black	2.5	.03 ohm
Black & Yellow	Center Tap (2.5 volt)	
Green	6.3	.10 ohm
Blue	5.0	.05 ohm
Yellow	High Voltage	115.2 ohms
Green & Yellow	Center Tap (Hi-Volt.)	
Black	Common Primary	
Red	100-125 Primary	2. ohms
Brown	110-155 Primary	2.2 ohms
White	200-250 Primary	6.2 ohms
Part No. 5589		**25 cycle**
Lead Color	**Voltage**	**Resistance**
Blue	5.0	.06 ohm
Green	6.3	.10 ohm
Yellow	High Voltage	154.5 ohms
* Black & Yellow	Center Tap (Hi-Volt.)	
White	110 Primary	2.45 ohms

The secondary of each intermediate frequency transformer is composed of three sections, the upper, center and lower (see Figures 1 and 2). The primary is composed of two sections, the upper and lower. The upper sections of the primary and secondary are loosely coupled to each other and constitute the major portion of the primary and secondary inductance respectively. The lower section of the primary and the center section of the secondary are tightly coupled. The coupling between the lower section of the secondary and the primary is loose. When the switch is on the Third Dimension position, the lower section of the secondary is out of the circuit and the secondary winding is made up of the other two windings, connected in series. Because the coupling between the lower section of the primary and the center section of the secondary is tight, a broad response will result.

When the switch is on the "Sharp" position, the center section of the secondary is cut out of the circuit and the loosely coupled lower section is substituted, thus the selectivity is increased the desired amount. Since the inductance of the center section and the lower section of the secondary are identical, the tuning is not altered when switching from the "Sharp" to the Third Dimension position. Because of this very practical and unique design, it is possible to arrange the tuning indicator circuit in such a manner that it is only engaged on the "Sharp" position of the switch. This serves to remind the operator that all tuning should be done on the "Sharp" setting to insure perfect resonance and most faithful reproduction.

©John F. Rider, Publisher

MODEL 110
Schematic

FAIRBANKS-MORSE HOME APP., INC.

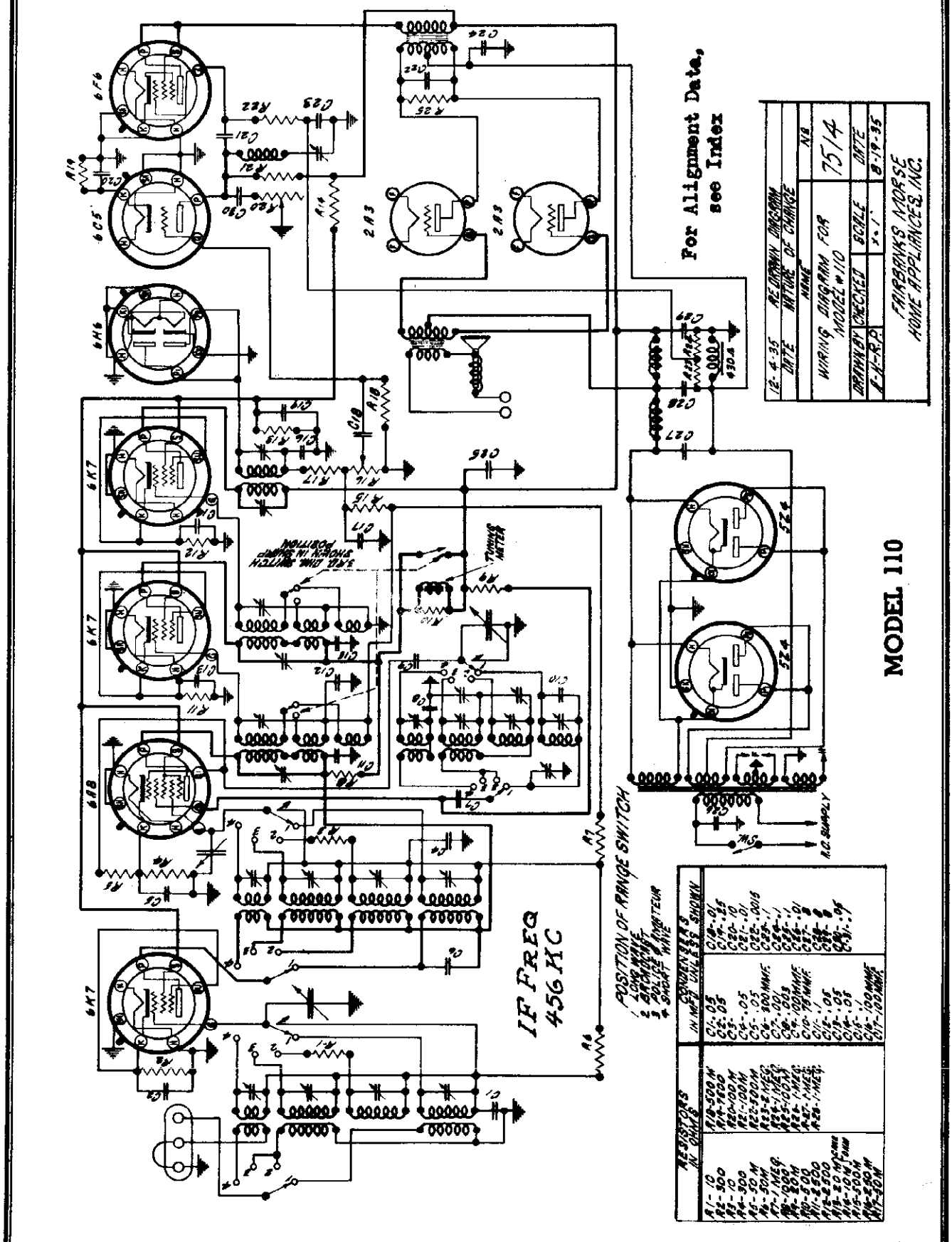

©John F. Rider, Publisher

MODEL 110
Voltage, Socket Trimmers, Resistance

FAIRBANKS-MORSE HOME APP., INC.

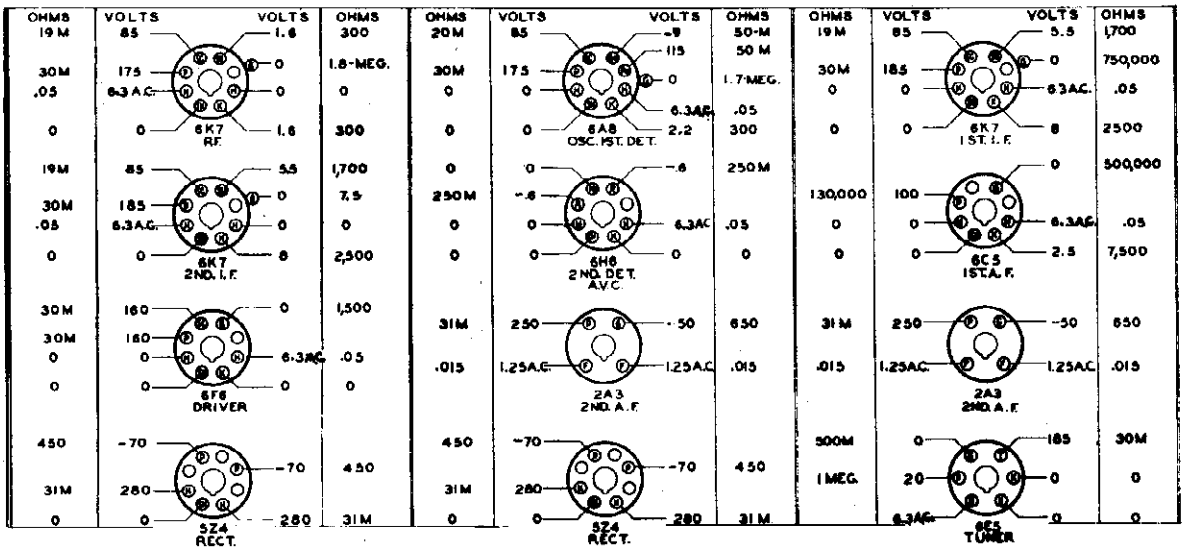

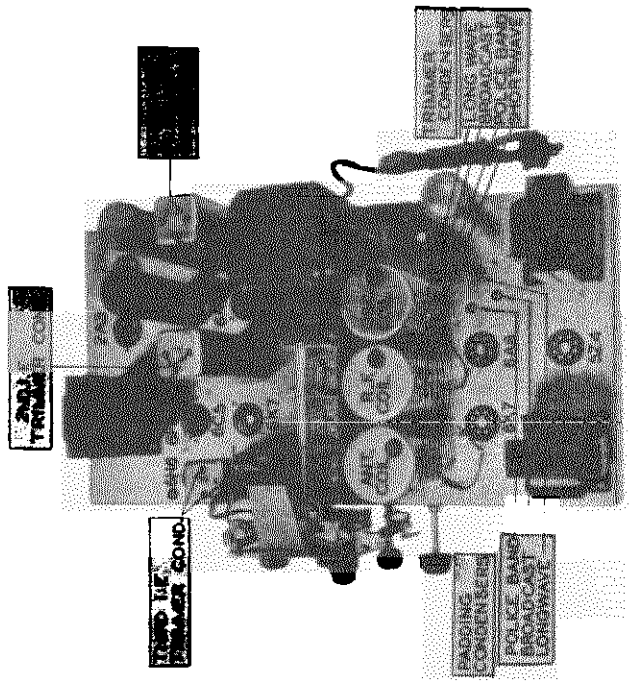

TOP AND BOTTOM VIEWS
MODEL 110

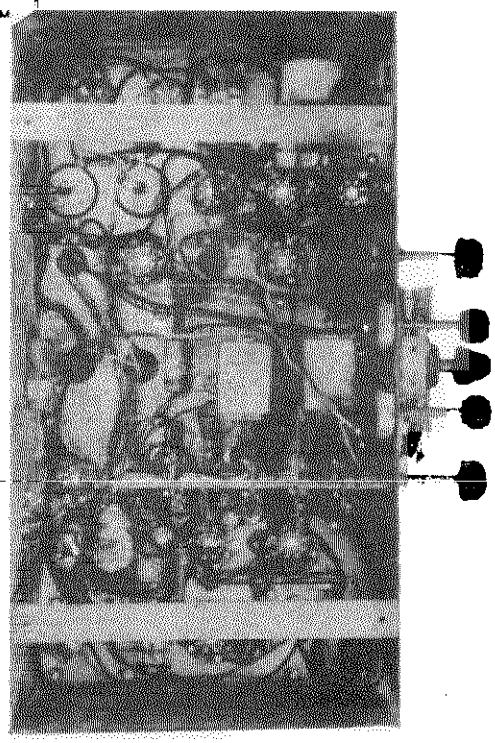

© John T. Riley, Publisher

FEDERATED PURCHASER

MODELS 8B,9B,11
Schematic
Voltage

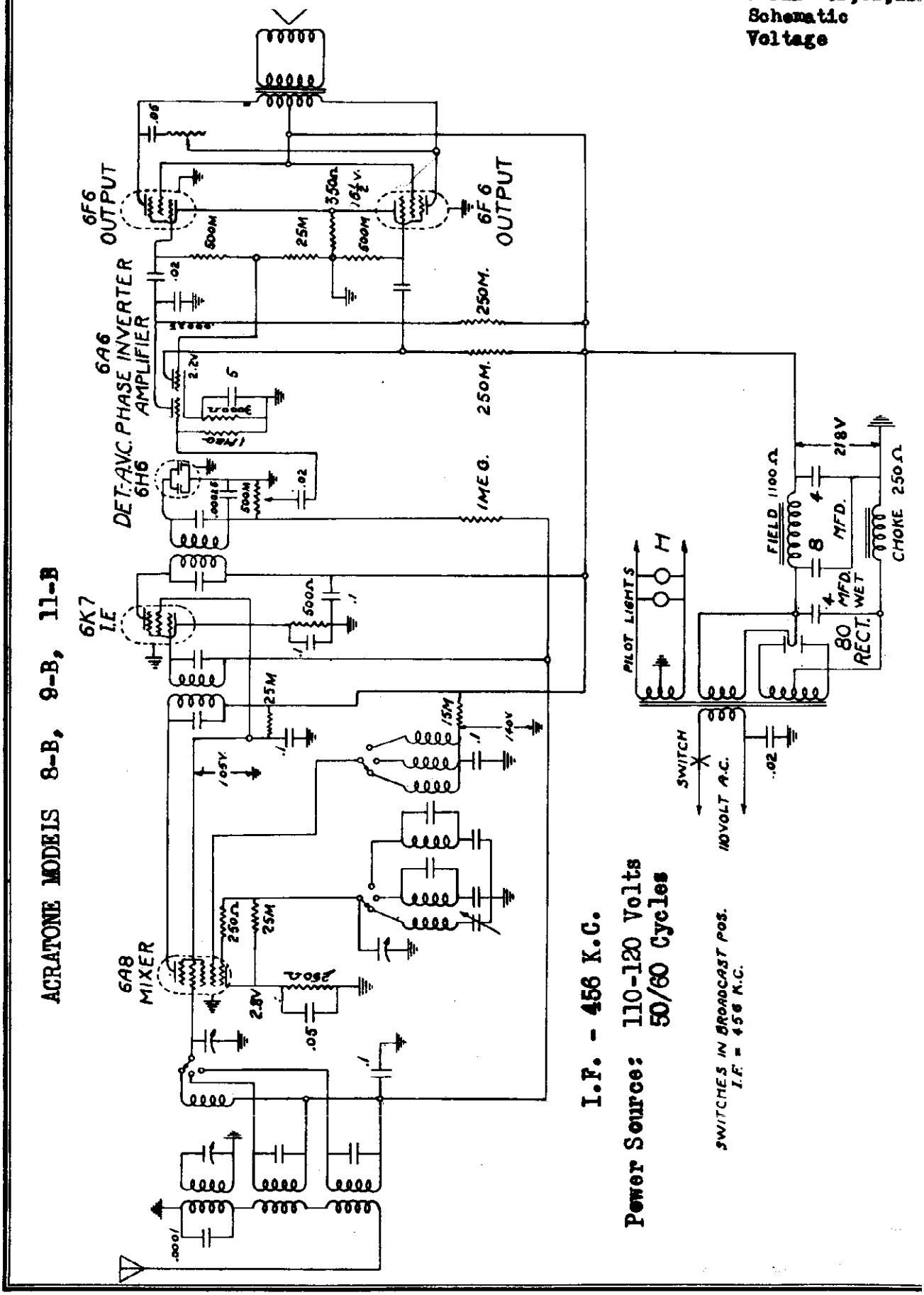

©John F. Rider, Publisher

MODEL 248
Schematic
Socket, Trimmers
Alignment

FEDERATED PURCHASER

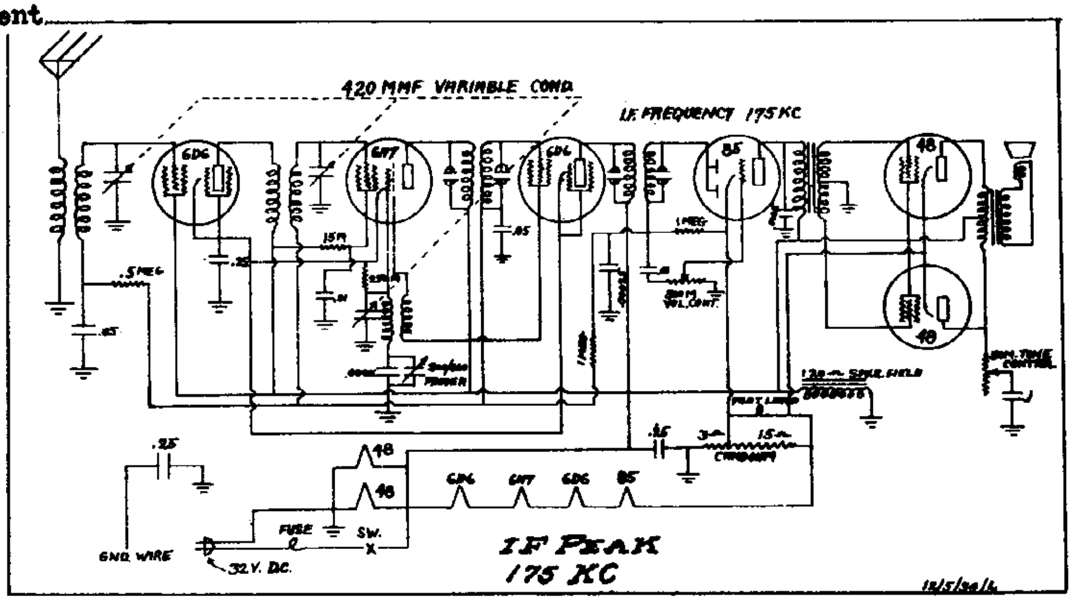

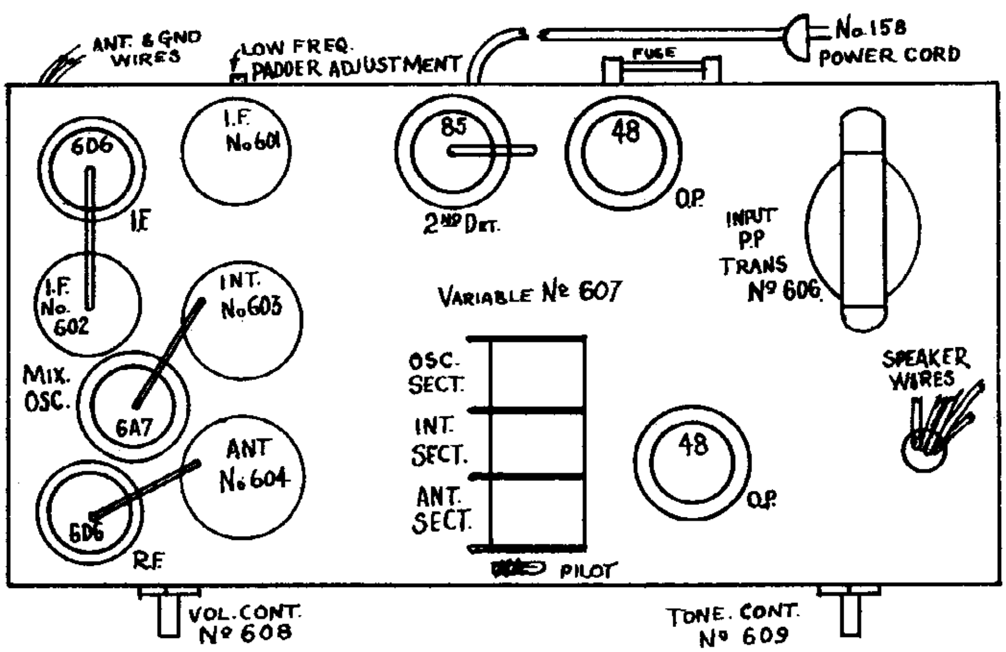

1 - Rebalance I.F. Transformers, applying a 175 K.C. note at 6A7 control grid.
2 - Open variable condenser all the way (minimum capacity) apply a 1720 K.C. note from oscillator at the antenna of receiver.
3 - Check oscillator section of variable to 1720 K.C. then adjust interstage and antenna to maximum peak.
4 - Adjust low frequency padder by applying a 600 K C oscillator note into antenna and while rocking variable condenser across signal adjust padder until maximum output is obtained.

©John F. Rider, Publisher

FEDERATED PURCHASER

MODELS 29C,30C,31C
Schematic, Voltage
Socket, Trimmers

Eight Tube A.C. Superheterodyne

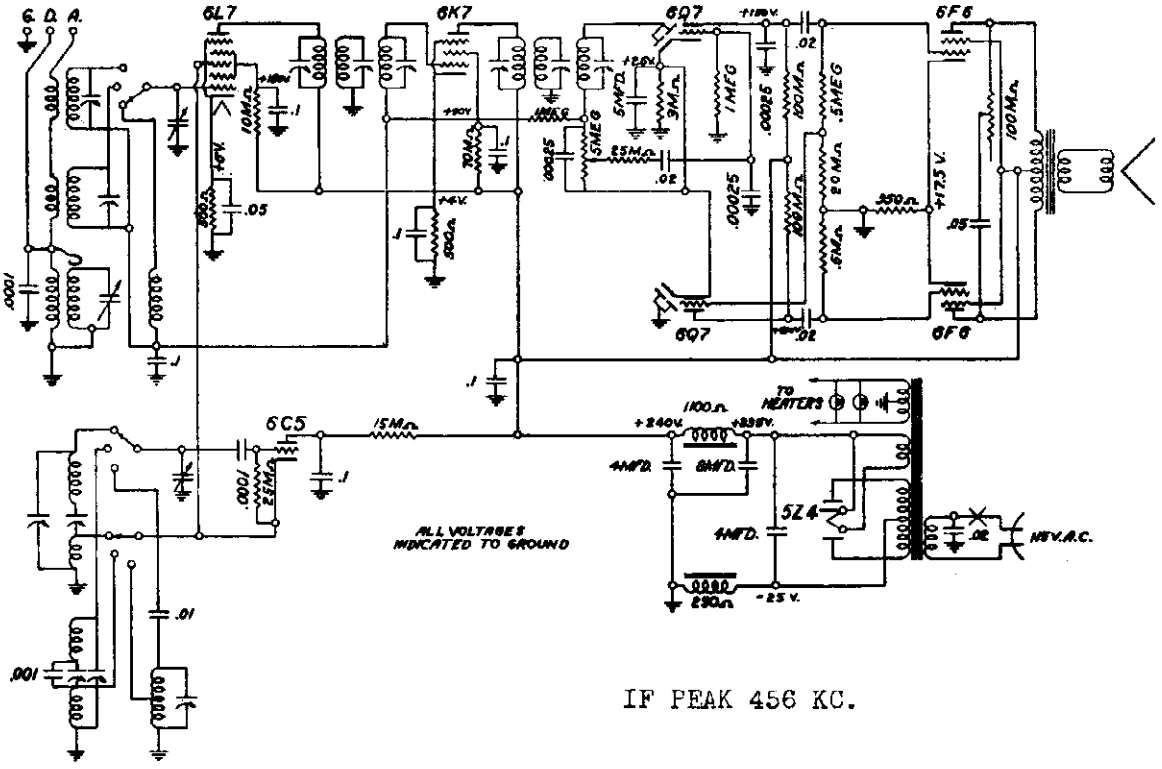

IF PEAK 456 KC.

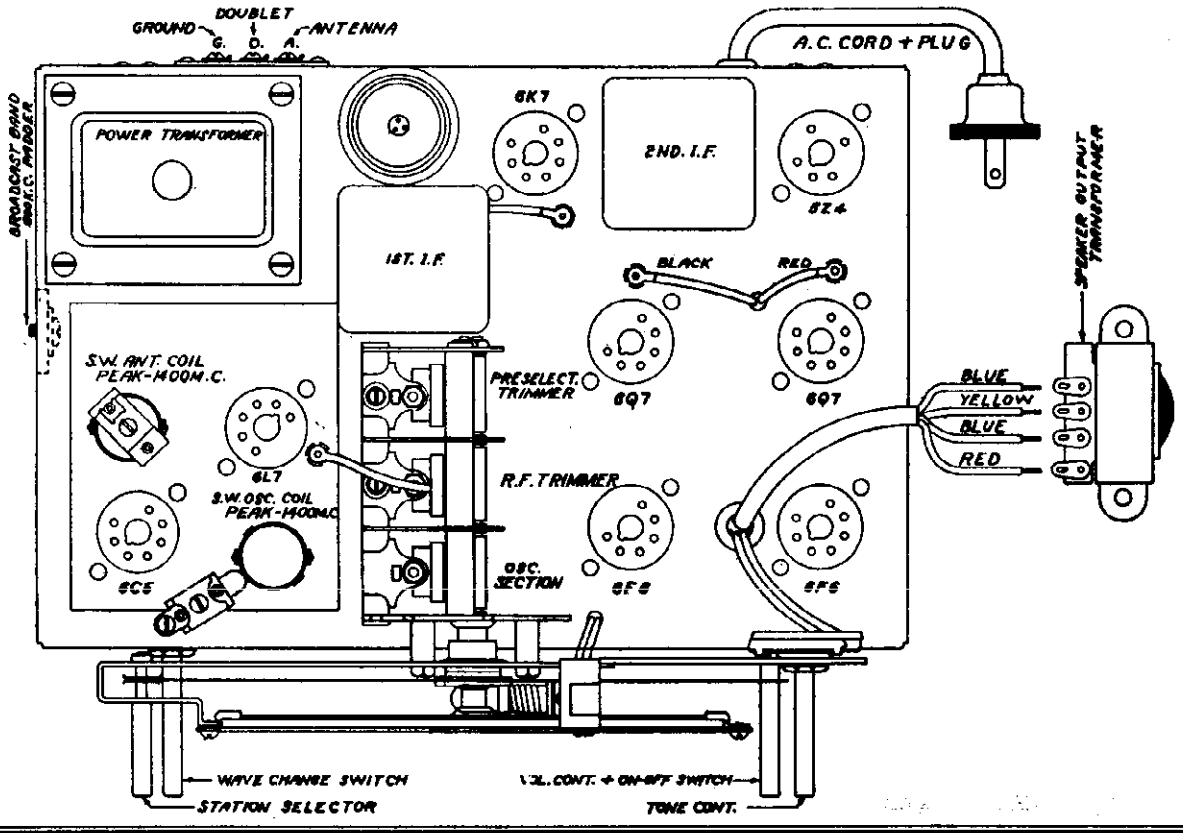

©John F. Rider, Publisher

Eight Tube A.C. Wave Superheterodyne

This receiver is designed to operate from a power supply main of 110-120 volts, 60 cycle alternating current (AC). **Never plug into a DC outlet.**

ALIGNMENT DATA

GENERAL DATA The alignment of this receiver requires the use of a test oscillator that will cover the frequencies of 456, 600, 1400, 1800, 4000, 6000, and 14,000 KC and an output meter to be connected across the primary or secondary of the output transformers. If possible, all alignment should be made with the volume control on maximum and the test oscillator output as low as possible, to prevent the AVC from operating and giving false readings.

CORRECT ALIGNMENT PROCEDURE The intermediate frequency (I.F.) stage should be aligned properly as the first step. After the I.F. transformers have been properly adjusted and peaked, the Broadcast Band should always be the next procedure; after which, either or both of the Short Wave Bands may be aligned.

I.F. ALIGNMENT Adjust the test oscillator to 456 KC and connect the output to the grid of the first detector tubes (6L7) through a .05 or .1 mfd. condenser. The ground on the test oscillator can be connected to the chassis ground. Align all six I.F. trimmers to peak or maximum reading on the output meter.

BROADCAST BAND ALIGNMENT Adjust the oscillator to 1400 KC and connect the output to the antenna post marked "A" through a .0001 mfd. mica condenser to give the equivalent of an antenna about 60 feet. Set the receiver pointer to 1400 KC and adjust the oscillator trimmer to peak. This trimmer is mounted on the oscillator coil and is located directly under the 6C5 socket. (This adjustment must be made from the bottom of the chassis.) After this has been carefully done, the next step is to adjust the center and rear trimmers of the gang condenser to peak. The center gang section tunes the R.F. or grid coil of the 6L7 tube and the rear condenser section tunes the pre-selector stage circuit.

Next, re-set the dial pointer on the receiver and the test oscillator to 600 KC. Slowly increase or decrease the oscillator padding condenser and at the same time continuously tune back and forth across the signal with the receiver until the maximum reading is obtained on the output meter. This adjustment seems a little complicated but is the easiest way to adjust the oscillator to the pre-selector or R.F. section. The padding condenser is located in the left end of the chassis. Return to 1400 KC and again go over the adjustments of this frequency to be certain that they were not put slightly out of alignment when adjustment was made at 600 KC.

If it is found that in returning to 1400 KC the pointer is accurately on scale, the only readjustments that should be made (in this recheck) are the center and rear trimmers of the gang condenser. If the pointer is found off scale, it may be corrected and put on scale by realignment of the oscillator trimmer. Alignment of the pointer can **only** be corrected by adjustment of the oscillator trimmer.

This completes the correct sequence of operations in properly aligning the receiver for the Broadcast Band, and **must always be done before** attempting to align the Short Wave Bands.

FOREIGN BAND The Foreign Band of 19 to 49 meters can be adjusted by the two trimmers located on the top of the chassis. The R.F. trimmer is located directly on top of the R.F. or Antenna coil and the oscillator trimmer is mounted on the chassis near the front of the oscillator coil. Set the test oscillator to 14,000 KC. In preparing the test oscillator for alignment of this band, connect a 400 ohm carbon resistor in series with the .0001 mfd. condenser on the output lead of the test oscillator. This resistor is used with the test oscillator only on the Short Wave Bands and should not be used for Broadcast Band alignment. The next operation is to adjust the R.F. and oscillator trimmers for peak at 14,000 KC and as the inherent design of the circuit has been expressly engineered for simplicity in servicing, no other adjustments are necessary for aligning this band.

Note: In order to prevent alignment on the image frequency, it is suggested that alignment be started with the antenna coil trimmer screwed down tightly. To check this adjustment, readjust the pointer to 13100 KC where the image frequency should be found. If properly aligned, the image frequency will be found to be weaker. If, however, the signal at 13100 KC is found to be stronger than the signal at 14000 KC, it signifies that alignment was incorrectly made on the image frequency.

Important: Do not attempt any adjustment of the gang condenser trimmers in aligning the Foreign Band as this will throw the Broadcast Band out of alignment.

POLICE BAND In preparing the test oscillator for alignment of this band, connect a 400 ohm carbon resistor in series with a .0001 mfd. condenser on the output lead of the test oscillator. This resistor is used with the test oscillator only on the Short Wave Bands and should not be used for Broadcast Band alignment.

Set the receiver pointer to 4000 KC (also test oscillator) and adjust the oscillator circuit trimmer to peak. The oscillator trimmer is mounted on the oscillator coil, which is located underneath the chassis. The oscillator coil is wound with enamel wire and is mounted to the front edge of the chassis. After this has been carefully done, the next step is to adjust the antenna trimmer to peak. The antenna trimmer is attached to the antenna coil; also mounted underneath the chassis and wound with enamel wire. The antenna coil is located nearest the power transformer. Now reset the dial pointer and the test oscillator to 1800 KC in preparation for adjusting the police band padding condenser. This padding condenser is mounted on the underside of the chassis, directly underneath the gang condenser. Slowly increase or decrease the oscillator padding condenser and at the same time continuously tune back and forth across the signal with the receiver until the maximum reading is obtained on the output meter. This adjustment seems a little complicated, but is the easiest way to correctly adjust the oscillator to the R.F. or antenna section.

Return to 4000 KC and again go over the adjustments of this frequency to be certain that they were not put slightly out of alignment when adjustment was made 1800 KC.

If it is found that in returning to 4000 KC the pointer is accurately on scale, the only readjustment that should be made (in this recheck) is the trimmer on the enamel wire antenna coil located underneath the chassis near the power transformer. If the pointer is found off scale, it may be corrected and put on scale by readjustment of the oscillator trimmer. Alignment of the pointer can only be corrected by adjustment of the oscillator trimmer.

Important: There are only three trimmer adjustments necessary for the Police Band. Do not attempt any adjustment of the gang condenser trimmers in aligning the Police Band; otherwise, the Broadcast Band will be thrown out of alignment.

SERVICE DATA FOR ALL BANDS

If it is suspected that the oscillator has stopped but is doubtful due to the presence of the usual amount of noise level, it is suggested that the oscillator plate voltage be checked. An approximate normal minimum oscillating voltage for the plate of the 6C5 (oscillator tube) at 115 volt line potential is as follows:

Broadcast Band	600 KC	125 Volts
	1400 KC	100 Volts
Foreign Band	6000 KC	135 Volts
	14000 KC	140 Volts
Police Band	1700 KC	135 Volts
	4000 KC	110 Volts

Another way of ascertaining whether the tube is oscillating is to ground the grid of the 6C5. If oscillating properly, grounding the grid will cause an appreciable drop in oscillator voltage.

PARTS LIST

Part No.	Description
P160	Elect. Condenser
P170	3 Gang Condenser
P217	Padding Condenser
P180	Pre-selector Coil
P467	1st I.F. Transformer
P468	2nd I.F. Transformer
P466	Oscillator Coil
P462	Power Transformer
P470	Output Transformer
P485	Choke
P438	Wave Change Switch
G728	Short Wave Antenna Coil
G729	Short Wave Oscillator Coil
G730	Police Band Antenna Coil
G731	Police Band Oscillator Coil
P441	Tone Control
P988	Volume Control & "On-Off" Switch
P176	A.C. Cord & Plug
P178	350 Ohm Resistor
P279	500 Ohm ¼ Watt Resistor
P186	25,000 Ohm ¼ Watt Resistor
P473	10,000 Ohm ½ Watt Resistor
P481	5,000 Ohm ¼ Watt Resistor
P258	15,000 Ohm ¾ Watt Resistor
P280	100,000 Ohm ¼ Watt Resistor
P197	500,000 Ohm ¼ Watt Resistor
P674	20,000 Ohm ¼ Watt Resistor
P675	70,000 Ohm ¼ Watt Resistor
P182	1 Megohm ¼ Watt Resistor
P480	.0001 Mica Condenser
P672	.001 Mica Condenser —10%+10%
P147	.00025 Mica Condenser
P143	.02 Mid. 400 Volt Condenser
P168	.05 Mid. 200 Volt Condenser
P671	.01 Mid. 200 Volt Condenser —10%+10%
P334	.05 Mid. 400 Volt Condenser
P142	.1 Mid. 200 Volt Condenser
P275	.1 Mid. 400 Volt Condenser
P474	4 Mid. 400 Volt Condenser
P304	5 Mid. Elect. Condenser
P733	12" Speaker Field Coil
P693	12" Speaker Cone & Voice Coil Assembly
	12" Dynamic Speaker
P688	Dial Glass
P648	Dial & Scale—Complete
P634	Knob
P124	Pilot Light

©John F. Rider, Publisher

FEDERATED PURCHASER

MODELS 32C,33C
Schematic,Voltag
Socket,Trimmers

Seven Tube 6 Volt Battery All Wave Superheterodyne
I.7 Chassis

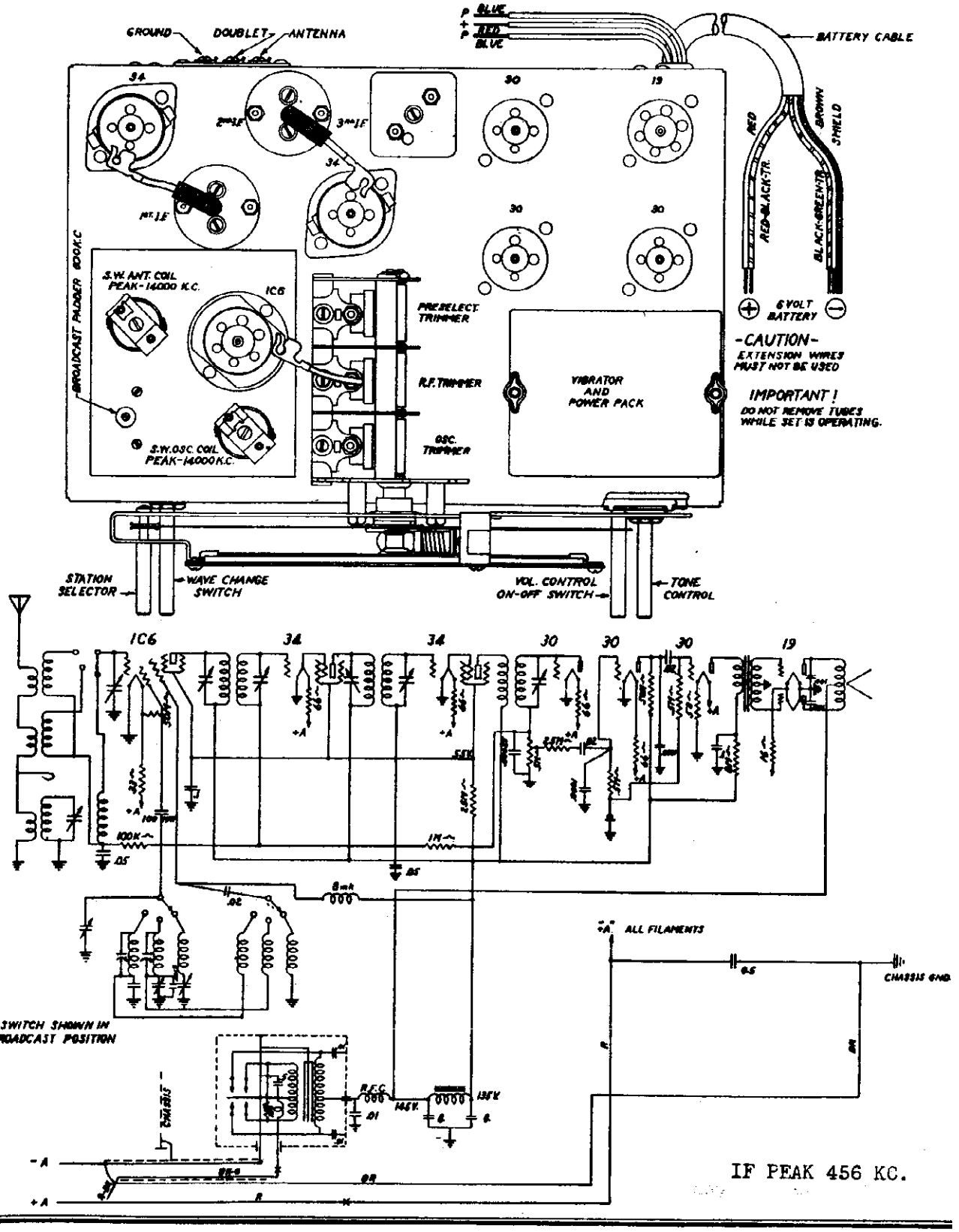

IF PEAK 456 KC.

©John F. Rider, Publisher

MODELS 32C,33C
Alignment
Parts List

FEDERATED PURCHASER

Seven Tube 6 Volt Battery All Wave Superheterodyne

ALIGNMENT DATA

The alignment of this receiver requires the use of a test oscillator which will cover the frequencies of 456, 600, 1400, 1800, 4000, 6000, and 14,000 KC and an output meter which is to be connected across the primary or secondary of the output transformer. If possible, all alignments should be made with the volume control on maximum and the test oscillator output as low as possible, to prevent the AVC. from operating and giving false readings.

CORRECT ALIGNMENT PROCEDURE

The intermediate frequency (I.F.) stages should be aligned properly as the first step. After the I.F. transformers have been properly adjusted and peaked, the Broadcast Band should always be the next procedure; after which, either or both of the Short Wave Bands may be aligned.

I.F. ALIGNMENT

Adjust the test oscillator to 456 KC and connect the output to the grid of the first detector tube (1C6) through a .05 or .1 mfd. condenser. The ground on the test oscillator can be connected to the chassis ground. Align all five I.F. trimmers to peak or maximum reading on the output meter. As there are two stages of I.F. in this receiver, there will be consequently three I.F. transformers to align. The I.F. transformer nearest the type (30) diode detector has only one trimmer, (single tuned) and should be the first adjustment. Next adjust the center I.F. transformer, which has two trimmers (double tuned) for maximum output; then adjust the two trimmers on the input I.F. transformer (double tuned) for peak.

BROADCAST BAND ALIGNMENT

Adjust the oscillator to 1400 KC and connect the output to the antenna post marked "A" through a .0001 mfd. mica condenser to give the equivalent of an antenna about 60 feet. Set the receiver pointer to 1400 KC and adjust the front gang condenser trimmer (oscillator circuit) to peak. After this has been carefully done, the next step is to adjust the center trimmer of the gang condenser to peak. The center condenser section tunes the RF or grid circuit of the 1C6 tube. Next, re-set the dial pointer on the receiver and the test oscillator to 600 KC. Slowly increase or decrease the oscillator padding condenser and at the same time continuously tune back and forth across the signal with the receiver until the maximum reading is obtained on the output meter. This adjustment may seem a little complicated but is the easiest way to adjust the oscillator to the R.F. section. The padding condenser is located on the left hand side of the chassis, near the extreme front left corner.

Return to 1400 KC and again go over the adjustments of this frequency to be certain that they were not put slightly out of alignment when adjustment was made at 600 KC.

This completes the correct sequence of operations in properly aligning the receiver for the Broadcast Band, and **must always be done before** attempting to align the Short Wave Bands.

FOREIGN BAND ALIGNMENT

The Foreign Band of 19 to 49 meters can be adjusted by the two trimmers on the short wave coils located on the top of the chassis. In preparing the test oscillator for alignment of this band, connect a 400 ohm carbon resistor in series with the .0001 mfd. condenser on the output lead of the test oscillator. Set the receiver pointer to 14,000 KC (also test oscillator). The oscillator coil is located alongside the oscillator section of the tuning condenser (front section of gang), and the antenna or R.F. is the other coil remaining on top of the chassis. These two trimmers should be adjusted for peak at 14,000 KC (adjust oscillator trimmer first) and as the inherent design of the circuit has been expressly developed for simplicity in servicing, no other adjustments are necessary for aligning this band.

Note: Always start this procedure by having the oscillator coil trimmer loose (out all the way), and the antenna coil trimmer fairly tight (in all the way); otherwise it is possible to make a false alignment on the image frequency. In order to prevent alignment on the image frequency, it is suggested that the following check be made: Readjust the pointer to 13,100 KC where the image frequency should be found. If properly aligned, the image frequency will be found to be weaker. If, however, the signal at 13,100 KC is found to be stronger than the signal at 14,000 KC, it signifies that alignment was incorrectly made on the image frequency.

IMPORTANT: Do not attempt any adjustment of the gang condenser trimmers in aligning the Foreign Band as this will throw the Broadcast Band out of alignment.

POLICE BAND

In preparing the test oscillator for alignment of this band, connect a 400 ohm carbon resistor in series with a .0001 mfd. condenser on the output lead of the test oscillator. This resistor is used with the test oscillator only on the Short Wave Bands and should not be used for Broadcast Band alignment.

Set the receiver pointer to 4000 KC (also test oscillator) and adjust the oscillator circuit trimmer to peak. The oscillator trimmer is mounted on the oscillator coil, which is located underneath the chassis. The oscillator coil is wound with enamel wire and is mounted to the front edge of the chassis. This coil can be identified by the use of a layer of yellow cambric (Empire Cloth) separating the two windings. After this has been carefully done, the next step is to adjust the antenna trimmer to peak. The antenna trimmer is attached to the antenna coil; also mounted underneath the chassis and wound with enamel wire. The antenna coil is mounted at right angles to the oscillator coil and is nearest to the rear of the chassis.

Now reset the dial pointer and the test oscillator to 1800 KC in preparation for adjusting the police band padding condenser. This padding condenser is mounted on the underside of the chassis, directly underneath the gang condenser. Slowly increase or decrease the oscillator padding condenser and at the same time continuously tune back and forth across the signal with the receiver until the maximum reading is obtained on the output meter. This adjustment may seem a little complicated, but is the easiest way to correctly adjust the oscillator to the R.F. or antenna section. Return to 4000 KC and again go over the adjustments of this frequency to be certain that they were not put slightly out of alignment when adjustment was made 1800 KC.

If it is found that in returning to 4000 KC the pointer is accurately on scale, the only readjustment that should be made (in this recheck) is the trimmer on the enamel wire antenna coil located underneath the chassis near the power transformer. If the pointer is found off scale, it may be corrected and put on scale by readjustment of the oscillator trimmer. Alignment of the pointer can only be corrected by adjustment of the oscillator trimmer.

Important: There are only three trimmer adjustments necessary for the Police Band. Do not attempt any adjustment of the gang condenser trimmers in aligning the Police Band; otherwise, the Broadcast Band will be thrown out of alignment.

SERVICE DATA FOR ALL BANDS

If it is suspected that the oscillator has stopped but is doubtful due to the presence of the usual amount of noise level, it is suggested that the oscillator plate voltage be checked. To ascertain whether the tube is oscillating, ground the oscillator grid of the 1C6 (short stator and rotor plates of oscillator section on gang condenser). If oscillating properly, grounding the grid will cause an appreciable drop in oscillator voltage.

PARTS LIST

Part No.	Description
P670	3 Gang Condenser
P189	1st and 2nd I.F. Trans.
P719	Class B Input Transformer
P686	Single Tuned I.F. Trans.
P691	Vol. Con. & "On-Off" Sw.
P682	Tone Control
P658	Wave Change Switch
G560	Short Wave Antenna Coil
G561	Short Wave Osc. Coil
G562	Police Band Antenna Coil
G563	Police Band Osc. Coil
P173	Oscillator Coil
P193	Pre-selector Coil
P768	R.F. Osc. Plate Choke
P768	R.F. Choke
P617	Padding Condenser
P391	Electro. Cond. Dual 8 Mfd.
P382	Battery Cord
P422	40 Ohm Candohm Res.
P766	Gang Candohm
P767	18 Ohm Candohm
P411	Filter Choke
P410	Vibrator Transformer
P402	Vibrator Unit
P457	"A" Choke
P385	.5 Mfd. 10 Volt Condenser
P142	.1 Mfd. 200 V. Condenser
P149	.05 Mfd. 200 V. Condenser
P363	.02 Mfd. 200 V. Condenser
P335	.01 Mfd. 600 V. Condenser
P478	.0012 200 Volt Condenser
P672	.001 Mica Condenser
P480	.0001 Mfd. Mica Cond.
P147	.00025 Mica Condenser
P136	250 Ohm ¼ Watt Resistor
P168	8,000 Ohm ¼ Watt Res.
P166	25,000 Ohm ¼ Watt Res.
P417	50,000 Ohm ¼ Watt Res.
P280	100,000 Ohm ¼ Watt Res.
P162	1 Megohm ¼ Watt Res.
P688	Bias Cell
P403	6" Speak. (Midget Speak.)
P404	8" Speak. (Cons. Speak.)
P646	Dial and Scale Complete
P666	Escutcheon Plate
P662	Dial Glass
P446	Pilot Lights
P634	Knob

©John F. Rider Publisher

FIRESTONE

MODELS R-165AS, R-165WS
Air Chief Chassis R-165
Schematic, Voltage, Parts

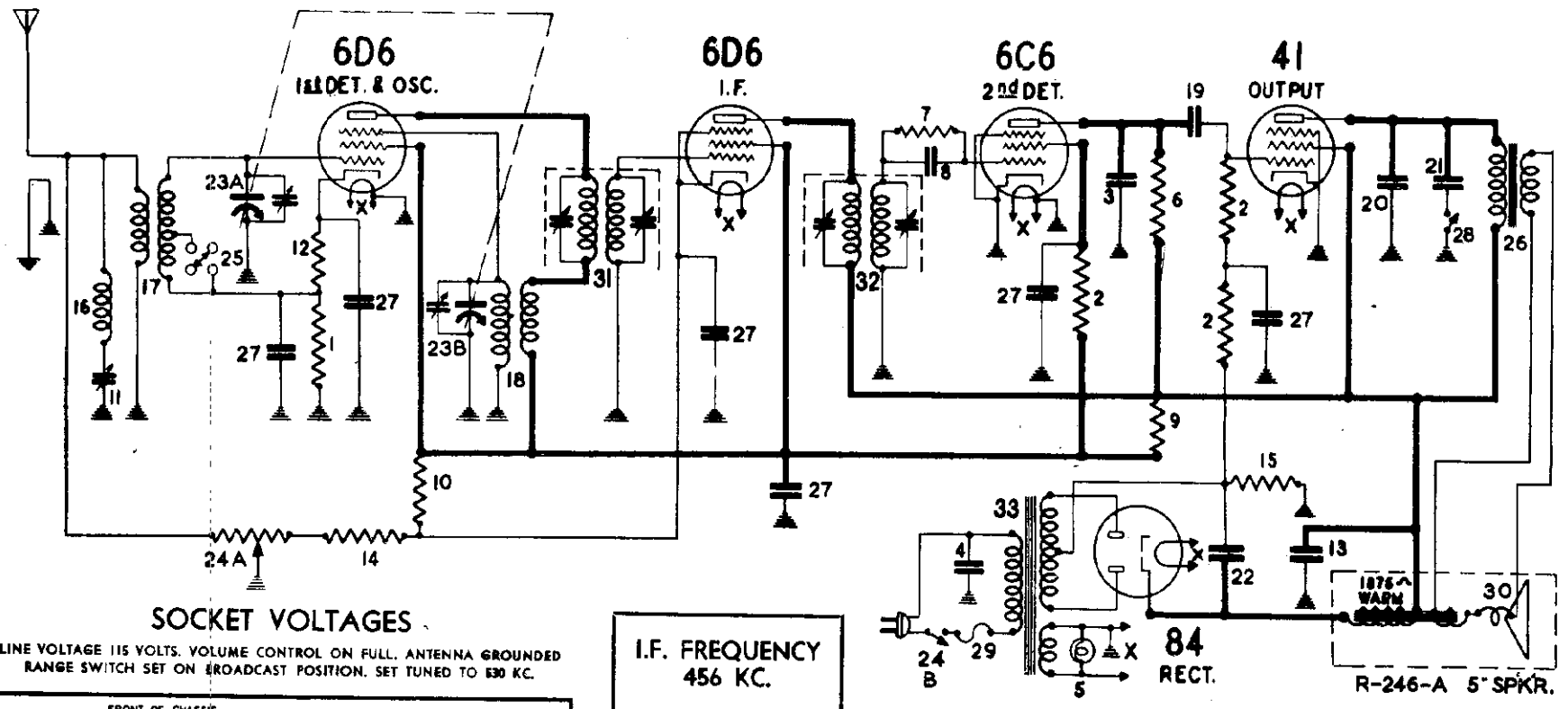

SOCKET VOLTAGES

LINE VOLTAGE 115 VOLTS. VOLUME CONTROL ON FULL. ANTENNA GROUNDED
RANGE SWITCH SET ON BROADCAST POSITION. SET TUNED TO 530 KC.

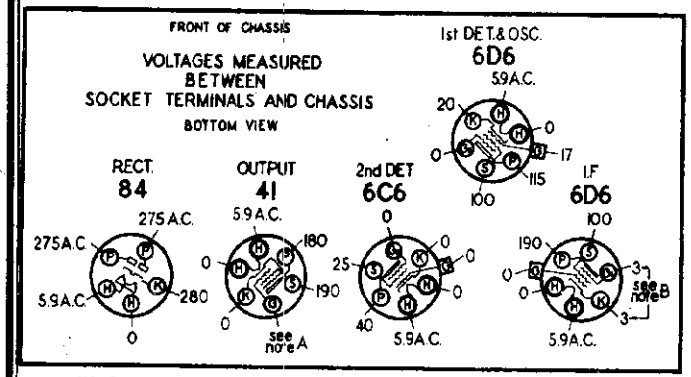

IMPORTANT: Use a high resistance voltmeter of 1000 ohms per volt. Readings will vary depending upon voltage range of meter, being higher for higher range instruments. This variation is most marked for second detector plate voltage.

NOTE A: The bias on the 6F6 output is —14 volts measured across the flexible wire wound resistor No. 15 in the circuit diagram.

NOTE B: The cathode voltage varies with the setting of the volume control, from +3 volts for maximum volume to +30 volts for minimum volume.

R-165 PARTS LIST

Diagram Number	Part Number	DESCRIPTION	List Price
1	71657	3000 Ohm ¼ watt Carbon Resistor	$0.25
2	83082	250,000 Ohm ¼ watt Carbon Resistor	.12
3	83539	260 mmfd. Mica Condenser	.20
4	83976	.012 mfd. 1000 volt Paper Condenser	.40
5	83278	Dial lamp 6-8 volts	.15
6	84198	110,000 ohm ¼ watt Carbon Resistor	.12
7	84235	1.1 megohm ¼ watt Carbon Resistor	.12
8	85061	51 mmfd. Mica Condenser	.15
9	85064	10,000 ohm 1 watt Carbon Resistor	.20
10	85266	70,000 ohm ¼ watt Carbon Resistor	.20
11	85285	456 KC. Wave Trap Trimmer	.40
12	85691	500 ohm ½ watt Wire Wound Resistor	.20
13	88007	8 mfd. 250 volt Electrolytic Condenser	1.00
14	88009	200 ohm ½ watt Wire Wound Resistor	.12
15	88010	320 ohm 1½ watt Wire Wound Resistor	.15
16	88014	456 KC. Wave Trap Coil	.50
17	88018	Antenna Coil	1.00
18	88019	Oscillator Coil	.70
19	88026	.02 mfd. 400 volt Paper Condenser	.25
20	89826	.004 mfd. 750 v. Paper Condenser	$0.24
21	88030	.01 mfd. 400 volt Paper Condenser	.25
22	88033	.8 mfd. 350 volt Electrolytic Condenser	1.00
23A & B	89359	.2 Gang Variable Condenser	4.00
24 A B	88036	Volume Control, 22,000 ohm; Line Switch	1.25
25	88037	Range Switch	.60
26	88040	Output Transformer	1.50
27	88046	.1 mfd. 150 volt Paper Condenser	.25
28	88054	Tone Control Switch	.30
29		IMPORTANT. ¾ Amp. Fuse (USE THIS SIZE ONLY)	
30	88100	Diaphragm and voice coil	1.50
31	88389	1st I. F. Transformer	2.00
32	88390	2nd I. F. Transformer	2.00
33	88393	Power Transformer, 115 V-60 cycle (used on 165AS)	4.20
23A & B	89359	.2 Gang Variable Condenser	4.00
33	89756	Power Transformer, 105 to 250 V.— 50 to 133 cycles (used on 165WS)	7.00
20	89826	.004 mfd. 750 v. Paper Condenser	.24
	R-246-A	Speaker — 5 inch	4.50

PRICES SUBJECT TO CHANGE WITHOUT NOTICE

MODELS R-1651AS, R-1651WS
Air Chief Chassis R-165
Circuit Data, Alignment
Trimmers

FIRESTONE

CIRCUIT DESCRIPTION

The Air Chief chassis Model 165 includes a speaker that is mounted directly on the chassis.

This receiver uses a superheterodyne circuit which employs five tubes. The intermediate frequency is 456 KC. The tuning range of this chassis includes, in addition to the standard broadcast band, the two police radio bands.

The signal picked up by the antenna is impressed on the primary of the antenna transformer, which has connected across it a wave trap for the purpose of eliminating 456 KC. interference. The signal is then tuned and impressed on the control grid of the 6D6 oscillator and first detector. The suppressor, or No. 3 grid of the 6D6, is used as the oscillator grid. The 456 KC. output of the first detector is amplified in the I. F. stage, using a 6D6 tube.

The second detector is of the grid leak-grid condenser type, and uses a 6C6 tube. The 6D6 is resistance coupled to the 41 pentode power amplifier. Bias for the output tube is obtained by grid return connection to the negative end of a resistor connected between the center tap of the power transformer high-voltage winding and ground. The bias potential so obtained is filtered by a resistance-capacity filter.

The volume control is double acting. It simultaneously changes the antenna signal input and the I. F. stage bias. Because of the sensitivity of this receiver, and due to the fact that it does not have A.V.C., it requires an antenna that is shorter than usual. The short antenna is particularly necessary where intereference from powerful local stations is encountered, and where difficulty is experienced in properly controlling the volume.

When tuning on the short wave band, local broadcast stations can be heard in the background at their regular positions on the dial. This is a normal condition, and is due to the tapped coil method of tuning the antenna coil secondary to the short wave band. No aligning adjustments are required on the short wave band.

ALIGNING EQUIPMENT

For proper alignment of this receiver, an output meter and a high grade modulated service oscillator are essential. The oscillator should be capable of generating the frequencies of 456 KC., 600 KC. and 1400 KC. The test oscillator calibration should be checked, using broadcast station signals as standards. For trimmer adjustment, it is advisable to use an all bakelite screwdriver, although one with a small metal tip may be used.

ALIGNING PROCEDURE

The step by step routine given below should be carefully followed. The trimmer numbers referred to are shown in the illustration.

ALIGNING THE I.F. CIRCUIT

1. Connect the output meter in series with a .25 mfd. condenser between the plate of the 41 tube and ground, or across the voice coil, depending on the type of meter.

2. Turn the volume control to the maximum volume position. (Note: The volume control should be kept in this position throughout the entire alignment procedure.) Ground the antenna lead to the chassis.

3. Turn the range switch to the right (clockwise) to the broadcast position.

4. Adjust the test oscillator to exactly 456 KC. and connect its output in series with a .1 mfd. condenser to the control grid of the 6D6 first detector tube and the chassis.

5. Align I. F. trimmers No. 1, 2, 3 and 4 for maximum output as indicated on the output meter. No inward or sideward pressure should be applied to the alignment tool, or the condenser may spring back to a different setting as soon as the tool is removed.

6. Repeat all I. F. trimmer adjustments since the changing of each trimmer will affect the others to a certain extent.

456 KC. WAVE TRAP ADJUSTMENT

1. Disconnect the antenna lead from ground.

2. Connect the test oscillator output in series with a .00025 mfd. condenser to the antenna lead, and connect the test oscillator ground lead to the receiver chassis. Ground the chassis.

3. Without changing the test oscillator from the frequency setting used in aligning the I. F. stage, adjust trimmer No. 5 for **MINIMUM** output. Increase the test oscillator output as a minimum is reached, in order to obtain a clearly defined setting of the trimmer. **NOTE:** If code interference transmitted on a frequency in the neighborhood of 456 KC. is troublesome, the wave trap should be adjusted for **MINIMUM** output with the test oscillator set to the same frequency as the signal that is causing interference.

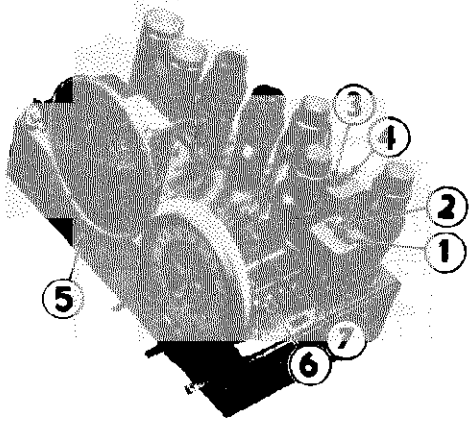

DIAL CALIBRATION

If the receiver should require calibration, proceed as follows:

1. Turn the gang condenser to full mesh and check to see that the dial pointer indicates 530 KC. If it does not, remove the dial glass and turn the pointer to 530 KC. when the gang condenser is in full mesh. Replace the dial glass.

2. Adjust the test oscillator to 1400 KC.

3. Turn the condenser gang until the dial pointer indicates 1400 KC.

4. Adjust trimmer No. 6 (oscillator shunt trimmer) for maximum output without changing the setting of the gang condenser.

R. F. ALIGNMENT

1. Set the test oscillator to 1400 KC. and apply the signal to the receiver antenna lead through a .00025 mfd. condenser.

2. Tune the receiver to the signal for maximum output.

3. Adjust trimmer No. 7 (detector shunt trimmer) for maximum output.

TUNING DRIVE, DIAL, AND MISCELLANEOUS PARTS NOT SHOWN ON CIRCUIT DIAGRAM

Part Number	DESCRIPTION	List Price
13923	Spring washer (for drive disc)	$0.05
67590	Flat washer for chassis mounting	.01
81090	Escutcheon mounting screw No. 1 x ¾ oval head W.S.	.60 per C
83552	Chassis mounting screw No. 10 x ⅜	.03
88056	Fuse mounting	.15
88057	Fuse cover	.08
88106	Dial gasket	.01
88108	Dial escutcheon	.50
88162	Tube shield	.08
88164	Tube shield cap	.06
89361	Dial frame and bracket assembly	.25
89363	Pilot lamp socket and bracket	.16
89365	Driven disc and bearing assembly	.36
89374	Dial pointer	.08
89378	Drive disc and shaft assembly	.30
89386	Dial glass	.15
89387	Knob (vol. control and range switch)	.18
89388	Knob (tuning control)	.18
89399	Dial scale	.45

PRICES SUBJECT TO CHANGE WITHOUT NOTICE

FORM 7648 PRINTED IN U.S.A. 9-19-36

©John F. Rider. Publisher

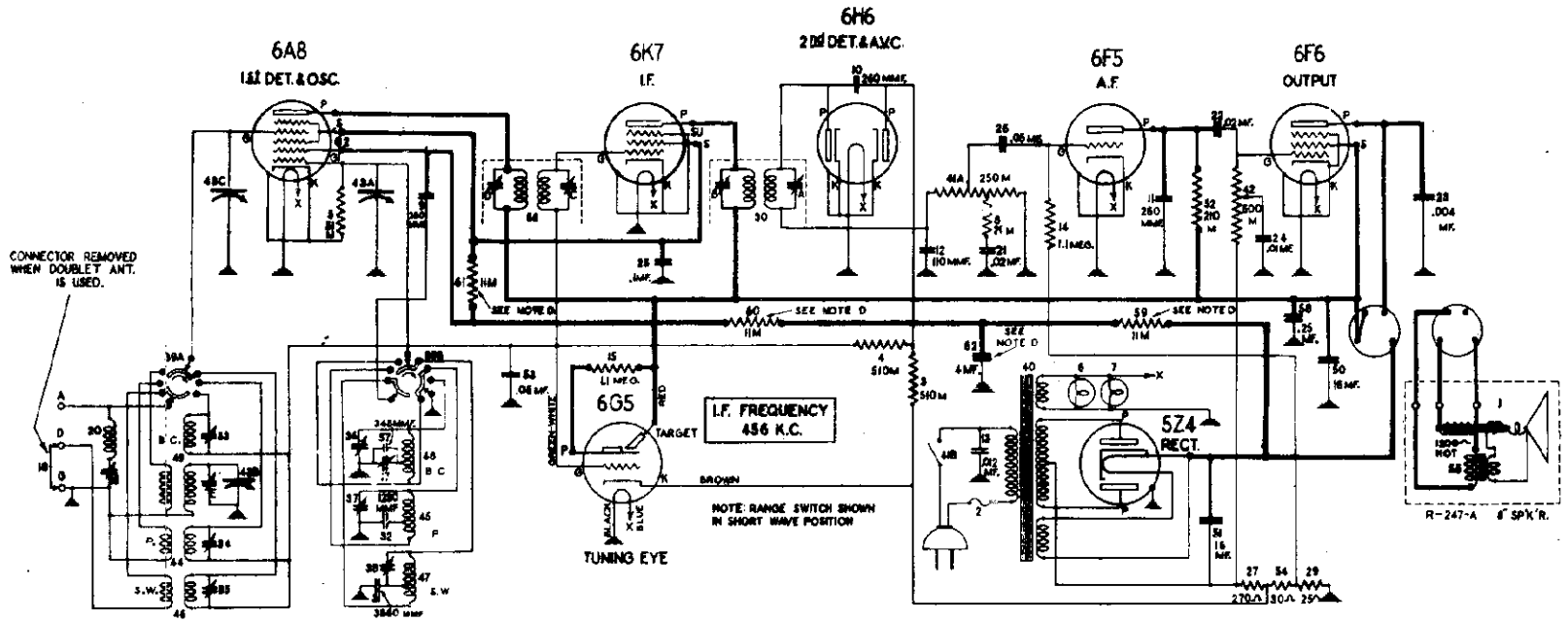

NOTE D: In receivers having serial numbers below 453,400 resistors 59, 60, and 61 are omitted and the screen grids of the 6K7 and 6A8 receive their current through a 26,000 ohm ½ watt resistor which is connected to the screen grid of the 6F6. The anode grid of the 6A8 is connected in series with a 21,000 ohm ½ watt resistor to the screen grid of the 6F6. Condenser 62 (4 mfd. 250 V.) is also omitted.

SOCKET VOLTAGES

VOLUME CONTROL ON FULL — ANTENNA GROUNDED
RANGE SWITCH SET ON BROADCAST POSITION — DIAL TUNED TO 530 KC.

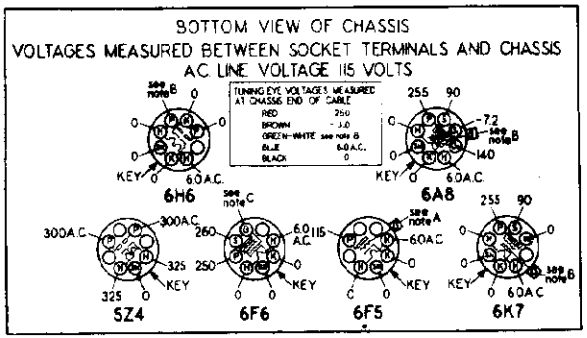

IMPORTANT: Use a high resistance voltmeter of 1000 ohms per volt.
NOTE A: The grid bias for the 6F5 is —1.3 volts measured across resistor 29.
NOTE B: The grid bias for the 6A8, 6K7, and the anode voltage of the A.V.C. section of the 6H6 is —3.0 volts measured across resistors 29 and 54.
NOTE C: The grid bias for the 6F6 output tube is —17.0 volts measured across resistors 29, 54 and 27.

MODEL R-166 PARTS LIST

Diagram Number	Part Number	DESCRIPTION	List Price
1	R-247-A	8" Dynamic Speaker	$9.00
2	IMPORTANT	Fuse, 1 ampere (USE THIS SIZE ONLY)	
3-4	83072	510,000 ohm ¼ watt carbon resistor	.15
5	83080	51,000 ohm ¼ watt carbon resistor	.20
6-7	83278	Pilot lamp, 6-8 volt	.15
8	83286	21,000 ohm ¼ watt carbon resistor	.20
9-10-11	83539	260 mmfd. mica condenser	.15
12	83783	110 mmfd. mica condenser	.16
13	83976	.012 mfd. 1000 v. shielded condenser	.35
14-15	84235	1.1 megohm ½ watt carbon resistor	.20
16	85285	Wave trap trimmer	.40
17	85285	Padding trimmer	.40
18	85321	Ground connector	.01
20	88011	Wave trap coil	.50
21-22	88026	.02 mfd. 400 v. paper condenser	.30
23	88026	.001 mfd. 750 v. paper condenser	.24
24	88030	.01 mfd. 400 v. paper condenser	.30
25	88046	.1 mfd. 150 v. paper condenser	.30
26	88189	.05 mfd. 200 v. paper condenser	.35
27	88463	270 ohm 1 watt carbon resistor	.15
29	88465	25 ohm ½ watt wire wound resistor	.15
30	88468	2nd I.F. transformer	2.40
31	88472	3860 mmfd. mica condenser	.35
32	88473	1230 mmfd. mica condenser	.25
33-34-35 36-37-38	88177	Trimmer condenser	.12
39A&B	88180	Range switch	1.90
40	88481	Power transformer, 115 v. 60 cycle	$5.00
40	89216	Power transformer, 100 to 240 V.— 25 to 133 cycles	11.50
41-A 41-B	88487	Volume control (250,000 ohm) A. C. line switch	1.25
42	88488	Tone control (500,000 ohm)	.80
43A to C	88493	Three gang condenser	5.40
44	88499	Antenna coil (Police)	.85
45	88501	Oscillator coil (Police)	.65
46	88502	Antenna coil (S.W.)	.80
47	88504	Oscillator coil (S.W.)	.80
48	88506	Oscillator coil (B.C.)	.55
49	88507	Antenna coil (B.C.)	1.60
50	88511	16 mfd. 300 v. electrolytic condenser	1.10
51	88512	16 mfd. 400 v. electrolytic condenser	1.10
52	88532	210,000 ohm ¼ watt carbon resistor	.12
53	88534	.05 mfd. 150 v. condenser (low loss)	.25
54	88613	30 ohm ½ watt wire wound resistor	.15
55	88529	Output transformer (on R-247-A speaker)	2.00
56	88466	1st I.F. transformer	2.40
40	89216	Power transformer, 100 to 240 V.— 25 to 133 cycles	11.50
57	89564	.345 mmfd. mica condenser	.25
58	89643	.25 mfd. 300 volt paper condenser	.50
59-60	89751	11,000 ohm 1 watt carbon resistor	.12
61	89753	11,000 ohm ½ watt carbon resistor	.15
62	89755	4 mfd. 250 volt electrolytic condenser	1.00

PRICES SUBJECT TO CHANGE WITHOUT NOTICE

MODEL R-1661
Air Chief
Chassis R-166
Alignment, Socket
Trimmers, Parts

FIRESTONE

CALIBRATION AND ALIGNMENT

ALIGNING EQUIPMENT: For proper alignment, an output meter and an accurately calibrated oscillator with a tuning range from 456 KC. to 16 MC. are required.

Connect the output meter from the plate of the output tube to chassis. A convenient point to make the plate connection is to the yellow wire on the speaker socket.

ALIGNING THE I. F. AMPLIFIER: Turn the volume control to maximum volume position and keep it in this position throughout the entire alignment procedure. Turn the range switch to the broadcast position (fully clockwise).

Connect the test oscillator output leads to the 6A8 control grid and chassis with a **.1 mfd. condenser in series with the oscillator output.** Set the oscillator to exactly 456 KC. Set the receiver dial at any point where it has no tuning effect on the oscillator signal.

Adjust the four I.F. trimmers, Nos. 1, 2, 3 and 4, for maximum output meter deflection, then repeat the trimmer adjustment.

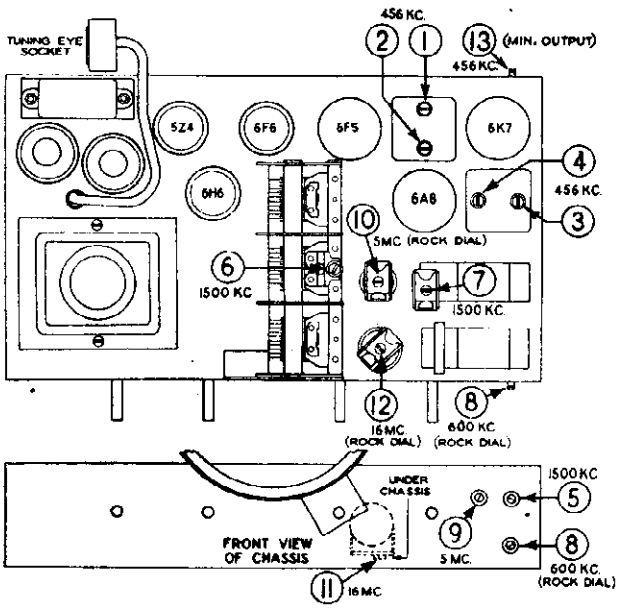

TRIMMER LOCATIONS

Trimmer Number		Alignment Frequency
1.	2nd I.F. transformer trimmer	456 KC.
2.	2nd I.F. transformer trimmer	456 KC.
3.	1st I.F. transformer trimmer	456 KC.
4.	1st I.F. transformer trimmer	456 KC.
5.	Broadcast oscillator shunt trimmer	1500 KC.
6.	Broadcast antenna shunt trimmer	1500 KC.
7.	Broadcast detector shunt trimmer	1500 KC.
8.	Broadcast oscillator series padder	600 KC.
9.	Police oscillator shunt trimmer	5 MC.
10.	Police antenna shunt trimmer	5 MC.
11.	Short wave oscillator shunt trimmer	16 MC.
12.	Short wave antenna shunt trimmer	16 MC.
13.	Wave-trap trimmer	456 KC.

BROADCAST BAND CALIBRATION AND ALIGNMENT: With the gang condenser in full mesh, the dial pointer should be on the white horizontal line below 530 KC. on the dial scale.

Turn the range switch to the extreme clockwise position and connect the test oscillator output to the A and G terminals of the receiver with a 400 ohm carbon resistor in series with the A terminal and the oscillator output.

Adjust the test oscillator to exactly 1500 KC. and turn the receiver dial pointer to 1500 KC. on the tuning dial. To calibrate the dial, adjust trimmer No. 5 for maximum output.

Carefully tune the receiver to the signal and adjust trimmers Nos. 6 and 7 for maximum output.

Adjust the test oscillator to 600 KC. and tune the receiver to the signal. Adjust trimmer No. 8 for maximum output. Then try to increase the output meter reading by detuning No. 8 slightly and retuning the receiver dial. If the output goes down, detune the trimmer in the opposite direction. Continue detuning the trimmer and retuning the receiver dial until maximum output meter deflection is secured. This operation is commonly known as "rocking" and when performed as described will give maximum selectivity and sensitivity even though the dial may be slightly off calibration at 600 KC.

WAVE-TRAP ADJUSTMENT: The wave-trap adjusting trimmer, No. 13, is located on the back of the chassis. Leave the test oscillator connected to the A and G terminals through a 400 ohm resistor and set the oscillator at 456 KC. Then adjust the wave-trap trimmer No. 13 for **minimum output.** If some particular station with a frequency near 456 KC. causes code interference, it may be desirable to adjust the wave-trap on the actual frequency of the interfering station.

Check the adjustment of trimmers 5, 6, and 7 at 1500 KC.

BAND NO. 2 CALIBRATION AND ALIGNMENT: Turn the range switch to the center position.

Adjust the test oscillator to exactly 5.0 MC. and turn the receiver dial pointer to exactly 5.0 MC. on the tuning dial.

To calibrate the dial, adjust trimmer No. 9 for maximum output. If two peaks are found, the proper one is that with the trimmer screw farthest out.

Carefully tune the receiver to the signal and adjust trimmer No. 10 for maximum output. Then try to increase the output by detuning No. 10 slightly and retuning the receiver dial. Continue detuning No. 10 and retuning the dial until the output meter deflection is a maximum.

BAND NO. 3 CALIBRATION AND ALIGNMENT: Turn the range switch to the extreme counter-clockwise position. Be sure the D and G terminals on the antenna terminal strip are connected together.

Set the test oscillator to 16 MC. and turn the receiver dial pointer to exactly 16 MC. on the tuning dial.

To calibrate the dial, adjust trimmer No. 11 for maximum output. Check to see that it has been adjusted to the proper peak by tuning the receiver to approximately 15.1 MC. A repeat signal should be heard at this point. If none is present, even with greatly increased oscillator output, retune the receiver to 16 MC. and adjust trimmer No. 11 to the proper peak with the trimmer screw farther out.

Carefully tune the receiver to the signal and adjust trimmer No. 12 to a peak. Then try to increase the output by detuning the trimmer slightly and retuning the dial until a maximum output meter deflection is secured. Check the adjustment by tuning the receiver to the image at about 15.1 MC. The image should be much weaker than the 16 MC. signal. If the signal at 15.1 MC. dial setting is equal to or stronger than the 16 MC. signal, trimmer No. 12 is not set to the proper peak. Turn the trimmer in a turn or so, then readjust as above.

MISCELLANEOUS PARTS NOT SHOWN ON CIRCUIT DIAGRAM

Part Number	DESCRIPTION	List Price
67590	Flat steel mtg. washer	$0.01
84428	Rubber chassis mtg. bushing	.03
84493	No. 10 x 1¼ chassis mtg. screw	.03
84805	Felt washer (for knobs)	.01
85066	C.D.A. terminal strip	.20
85321	Ground connector for C.D.A. strip	.01
88056	Fuse mounting	.16
88057	Fuse cover	.06
88675	Speaker socket	.12
89119	Tuning eye cable & plug	1.80
89424	Knob; tuning and tone control	.20
89425	Knob; range switch	.22
89426	Knob; volume control	.20

TUNING DRIVE AND DIAL PARTS

Part Number	DESCRIPTION	List Price
83278	Dial lamp	$0.15
88564	Pointer and stud assembly	.12
88743	Dial drive shaft	.18
88744	Dial drive shaft retainer spring	.05
88745	Dial ring and bracket assembly (for edge lighting)	.90
88748	Dial disc and bushing assembly	.50
88956	Escutcheon with glass	1.65
88958	No. 2 x ⅜ R.H. wood screw for escutcheon (each)	.01
89283	Pilot lamp socket	.10
89284	Pilot lamp shield	.02
89285	Dial background	.12
89423	Dial scale	1.80
89432	Escutcheon for tuning eye	.60

PRICES SUBJECT TO CHANGE WITHOUT NOTICE

FORM 7856—8-22-36—PRINTED IN U.S.A.

FREED MFG. CO., INC.

Freed
MODEL FE-
Schematic

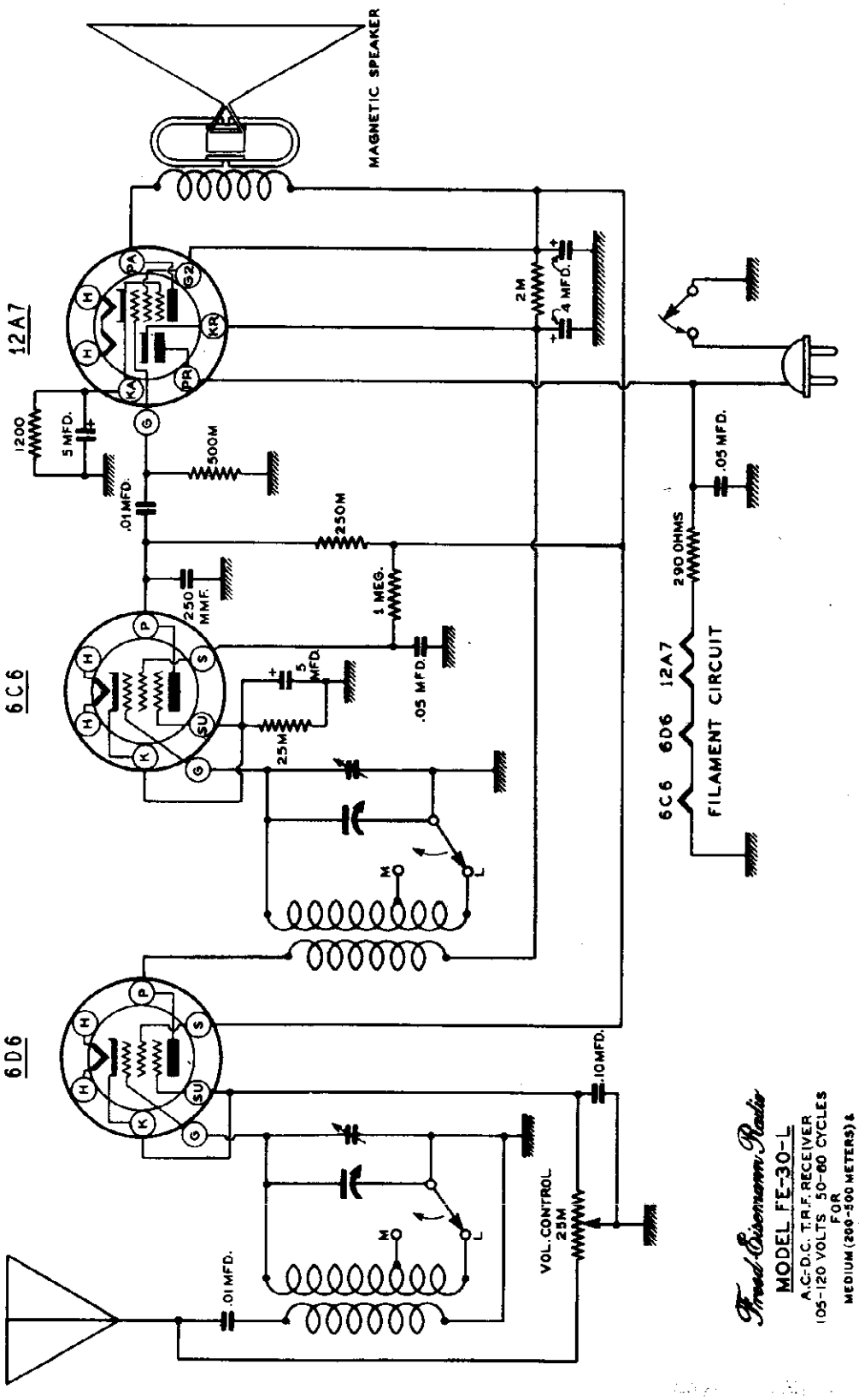

©John F. Rider, Publisher

MODELS FE-52, FE-56
FE-58
Schematic

FREED MFG. CO., INC.

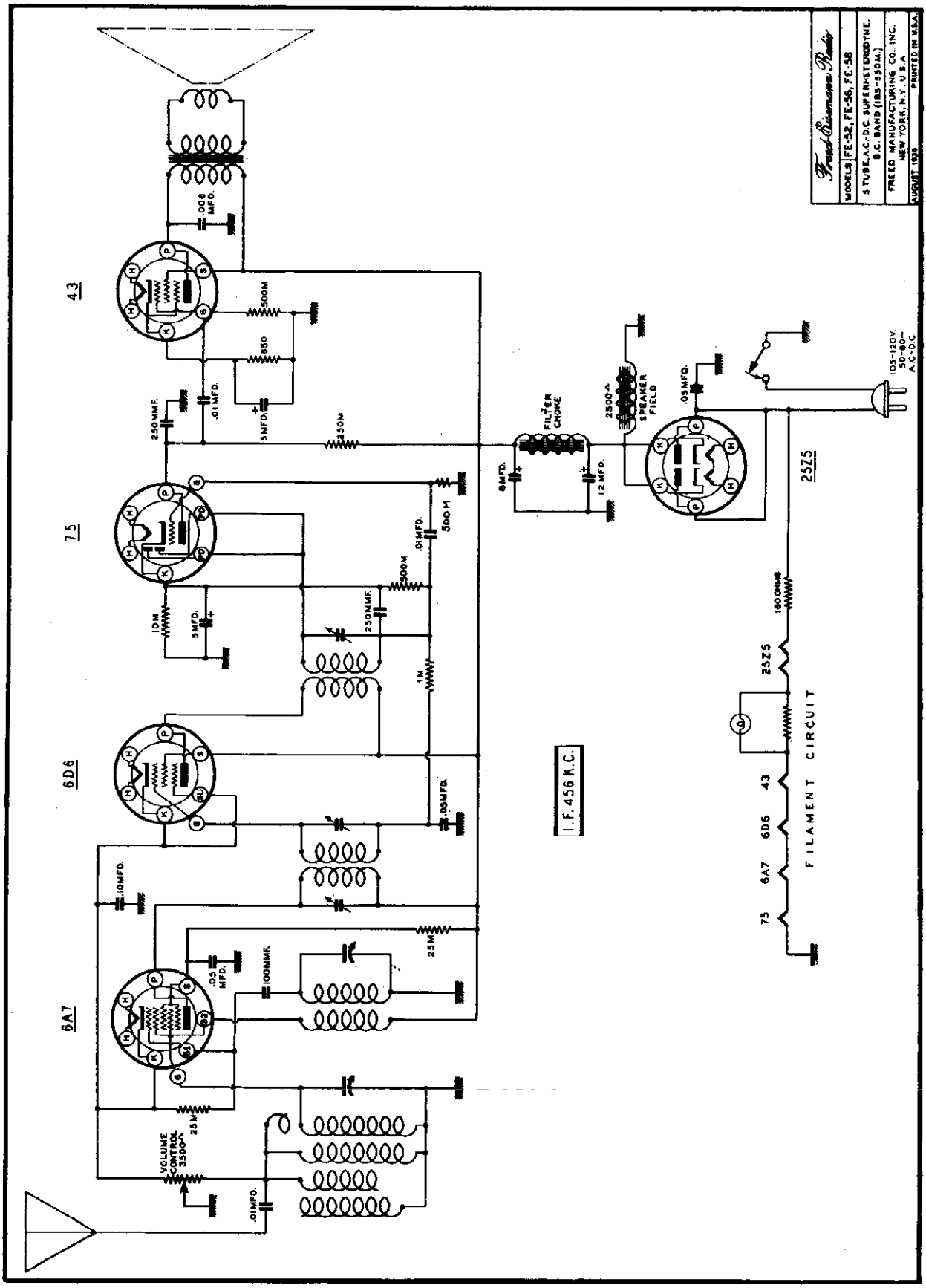

GALVIN MFG. CO.

MODEL Golden Voice
Schematic

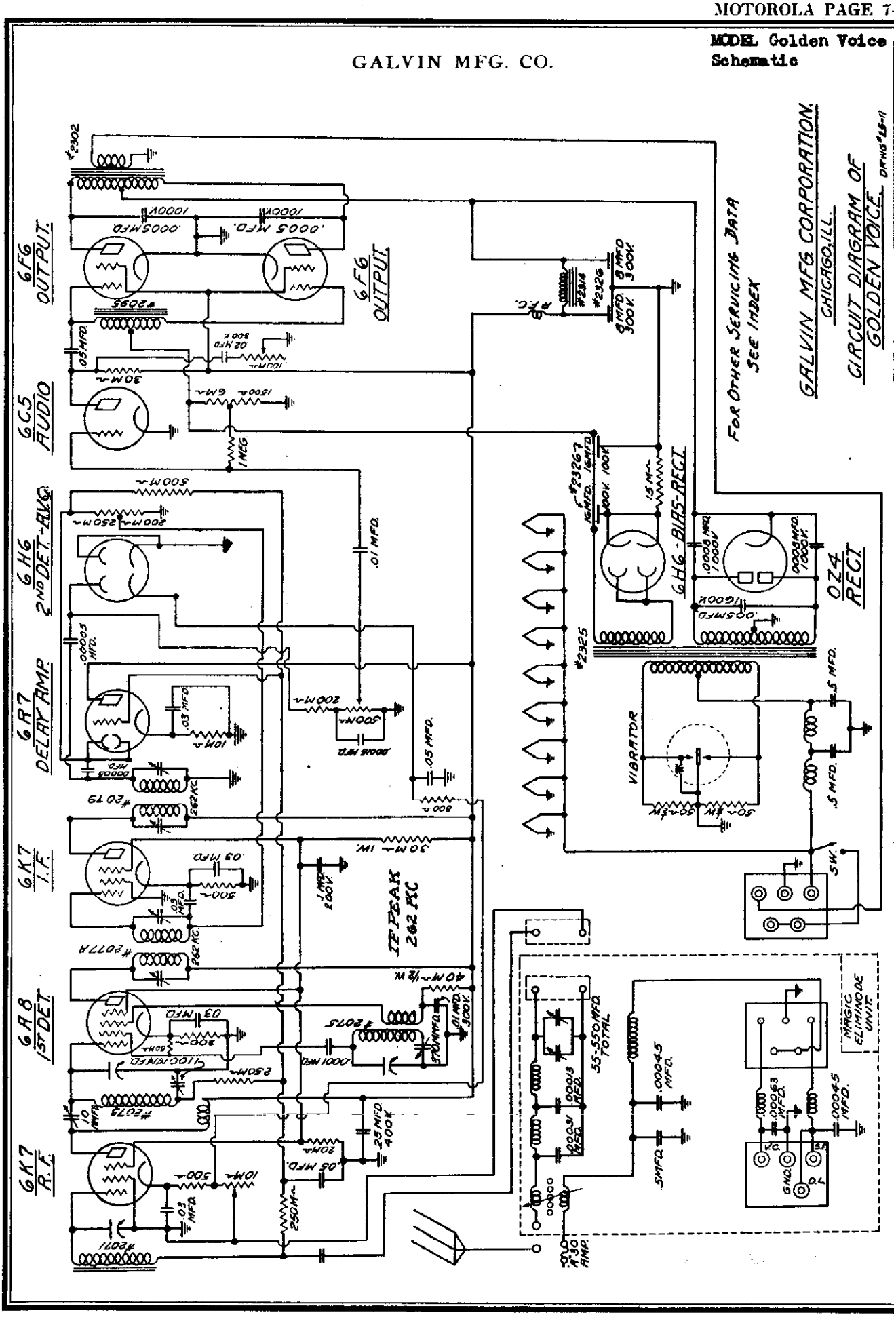

MODEL 50
Schematic

GALVIN MFG. CO.

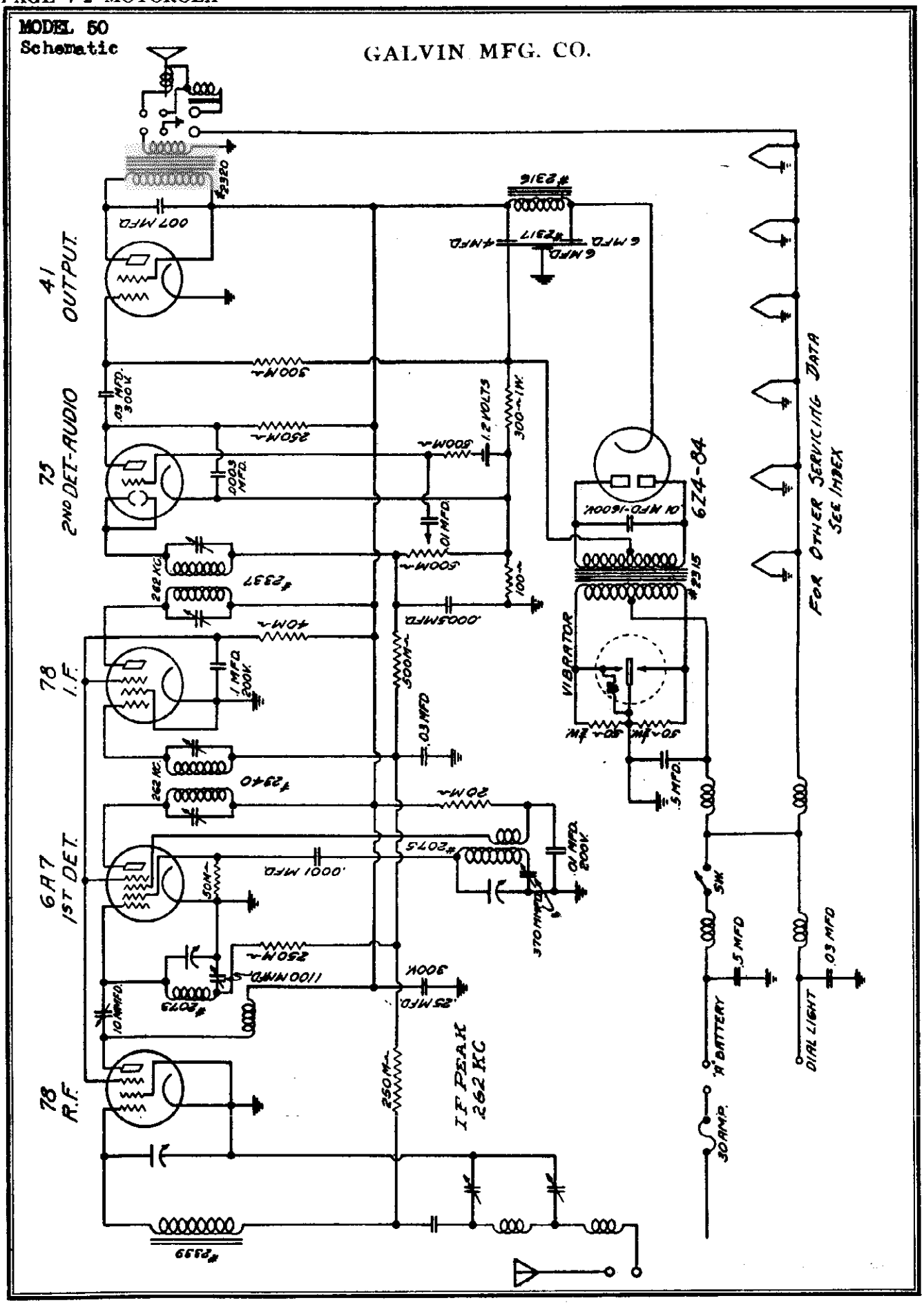

©John F. Rider, Publisher

GALVIN MFG. CO.

MODEL 60
Schematic

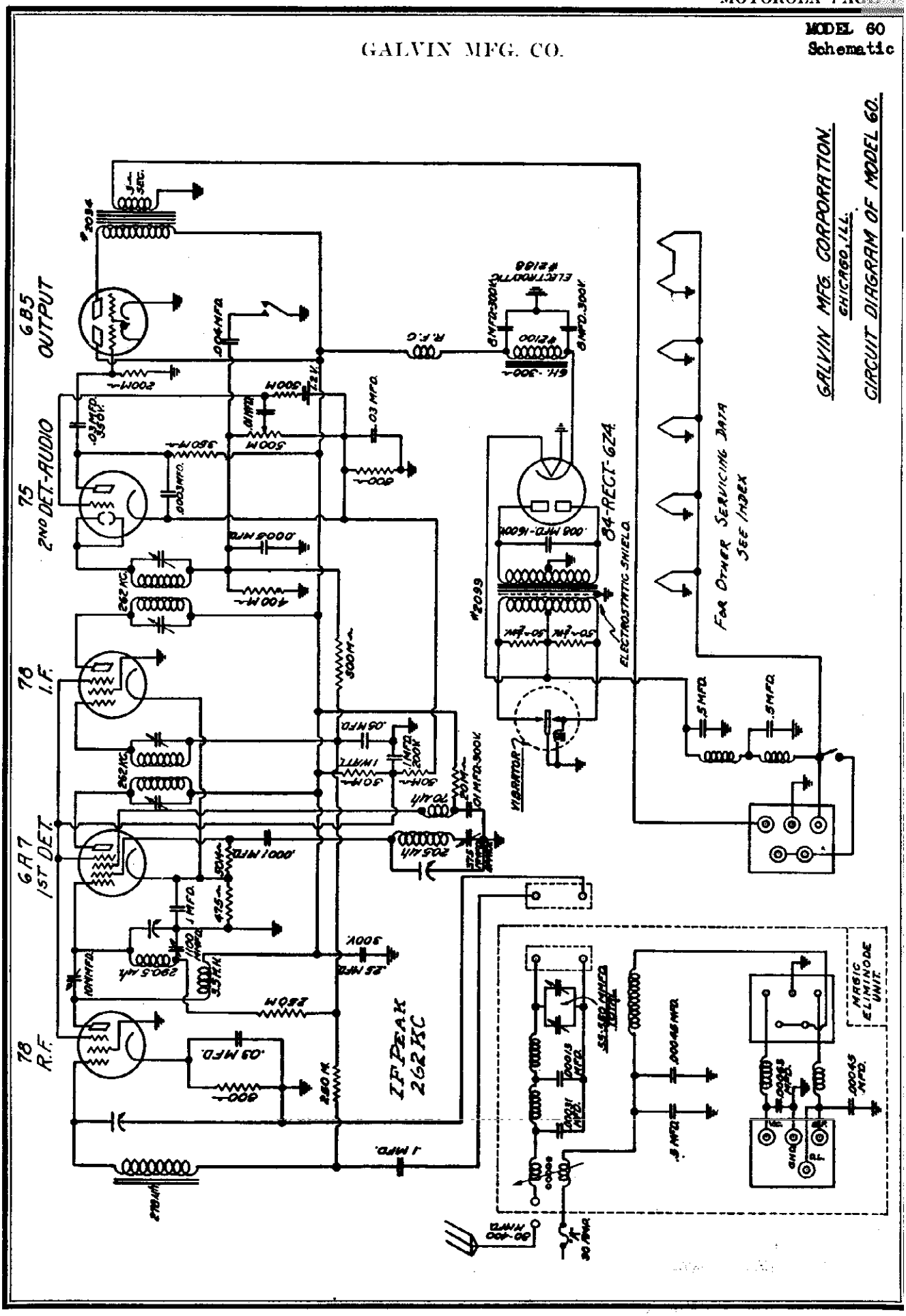

©John F. Rider, Publisher

MODEL 80
Schematic

GALVIN MFG. CO.

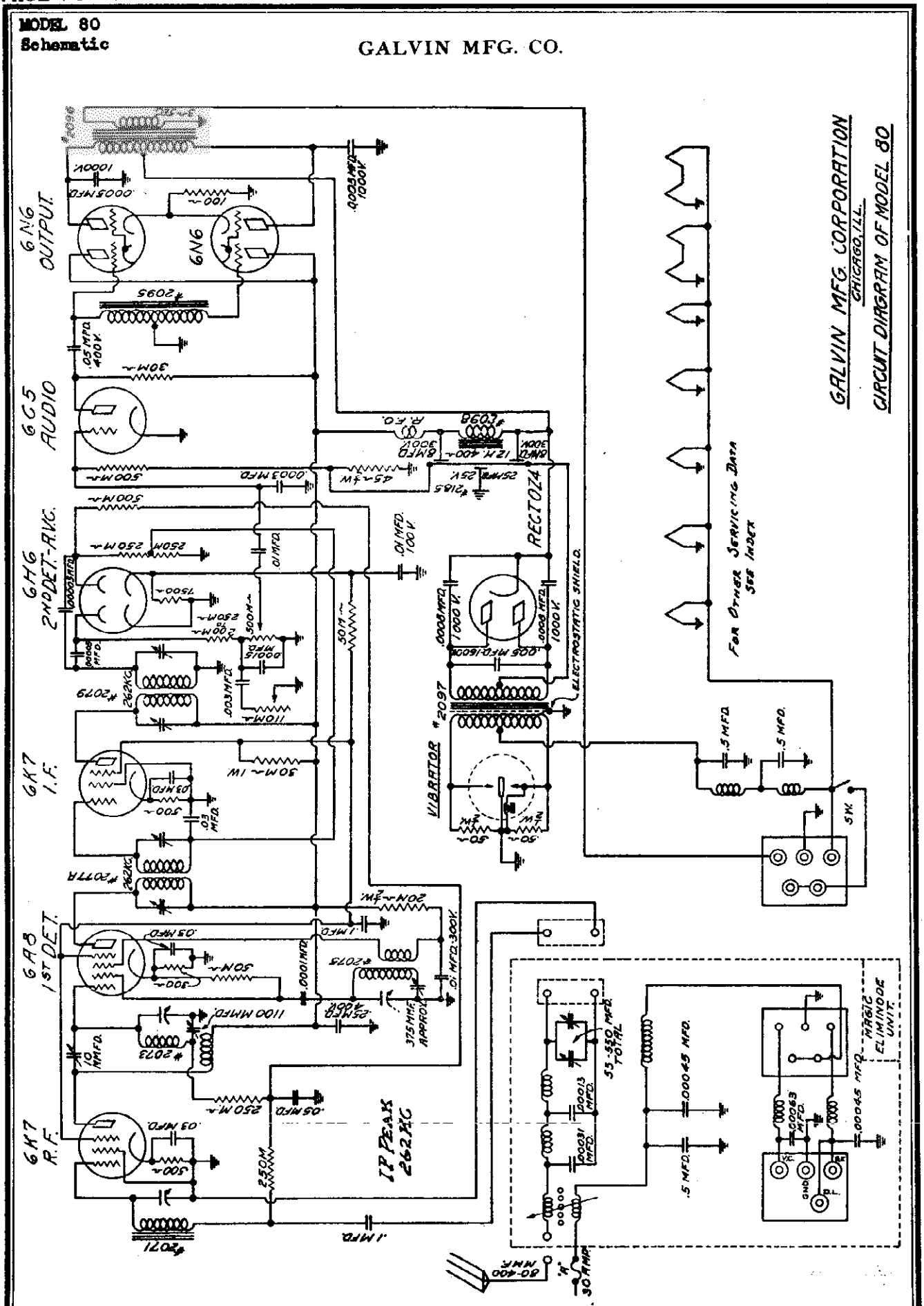

© John F. Rider, Publisher

©John F. Rider, Publisher

GALVIN MFG. CO.

MODELS 50, 60, 80, Golden Voice

Alignment, Sensitivity Magic Eliminode Notes Service Data

A DISCUSSION OF THE FUNCTION AND APPLICATION OF THE MAGIC ELIMINODE

The Magic Eliminode unit contains elements to perform the function of elimination of ignition interference introduced through supply leads and the antenna system. The interference introduced through the speaker leads and dial light lead is filtered by conventional low-pass filter chokes No. 3 and No. 4, condensers No. 17 and No. 18 filters the "A" lead No. 5 supplies the energy for balancing, this function is performed first, then the energy prevented from passing on to the receiver by another low-pass filter choke No. 1, condensers No. 16 and No. 19.

The "A" lead balancer consists of a pair of mutually coupled inductance coils No. 5 and No. 14, with an interposed electrostatic shield No. 10, and means for varying the coupling between these coils. This coupling variation is provided by varying the size of the aperture between these coils by a movable shutter No. 12, driven by screw No. 13. This provides a smoothly adjustable and constant coupling, preventing the coils to detune itself and preventing the possibility of phase discretion by keeping their position constant and parallel. A filter circuit, chokes No. 9 and No. 8 and condenser No. 7, is used in conjunction with the balancer to provide means for removing odd phase components of ignition interference and sometimes completely removing interference of low intensity.

Since the balancer derives its energy from the "A" system, it follows that the "A" lead supplies [illegible] CANNOT be by-passed at the point of its connection to the automobile wiring system. If that is done, [illegible] balancing energy will be available in the balancing unit. It is of utmost importance that the set receiver be [illegible] tracking condition and the antenna stage trimmed at 600 K.C. after being connected to the car antenna. If this is not done, the balance which is obtained at one point in the broadcast band will not hold at another point in the band.

INSTALLATION OF MODELS CONTAINING THE MAGIC ELIMINODE

In the 1936 Motorolas the necessity for proper grounding between the receiver housing, [illegible] and [illegible] the car body is just as important as it was in any previous Motorola model and its installation. The antenna lead is of such construction that free radiation from the car system will not penetrate its shield. However, if the antenna end of this shield is not connected to the body in the proper manner, the standing wave on the shield, due to [illegible] connection will be introduced into the antenna lead and seriously disturb the balancing condition, that is, [illegible] of balance and its consistency across the band. There are several supply leads and control cables entering the [illegible] of the receiver. The connection between these control cables and the housing MUST be good. The filtering of the supply leads entering the set is taken care of in the eliminode unit. Since the "A" lead, however, carries several amperes of "A" current modulated by the auto ignition system, this lead has a very high intensity of ignition field around it. Consequently, if it is placed close to the antenna trimmer or lingers in the housing, the energy radiated by it can be intersected by the grid of the first tube or its associated receiver-circuits. In view of this fact, it is very desirable to dress the "A" lead in back of or along the top rear edge of the receiver, but above all, away from the antenna trimmer openings.

There are several points on the car wiring circuit to which the "A" lead of the set can be connected. Some are [illegible] depending upon the "A" circuit for balancing energy, the "A" lead must be connected to some point on the system having a relatively high ignition potential. This point is usually at or near the ammeter or ignition switch. Connecting it to the starter cable, which is practically the battery itself, will usually result in insufficient balancing energy.

ELIMINATION OF IGNITION INTERFERENCE WITH THE MAGIC ELIMINODE

There are several sources of interference encountered in auto radio receivers, such as interference created by the generator, gasoline gauge, oil pressure gauge, and such devices. This is ordinarily removed by a by-pass condenser. The ignition system itself radiates to the antenna from various wiring elements or metallic members. These can be divided into four general classifications.

(1) Radiation from the ignition secondary system, that is, spark plugs and leads thereto.

(2) Radiation from the ignition primary system including all of the leads connected to it.

(3) Radiation from metallic members or leads connected to distributor breaking points.

(4) Radiation from free metal members.

The first source of interference, is encountered in earlier makes of cars, where the effective shielding of the hood, bulkhead and other metal surrounding the spark plug leads is poorly connected to the car frame, permitted radiation from these leads to reach the antenna itself.

In the later type of car construction where welding of component parts is employed and a good connection between hood and body is provided either by the car manufacturer or the installer, this type of interference is very low or negligible.

The second source of interference, namely that radiated from the "A" system either to the roof antenna or to the under-car plate is still a very serious and desirable interference. This interference is regular in character; in other words, of constant intensity for any given motor speed and readily considerable, and does not change to be appreciable, provided that in the case of the under-car installation the antenna plate is on the correct side of the car. This can be determined by observing whether upon opening the shutter, No. 12, from an entirely closed position, the interference decreases or increases. If the interference continues to increase as the shutter is opened the antenna plate must be mounted under the opposite running board. If this additive condition occurs on a roof antenna, the balancer itself must be reversed.

The third type of interference usually encountered on cars having a relatively high resistance path between the ground side of the ignition primary and the breaker points is of an intermittent, irregular character and generates from breaker point disturbances. This breaker point disturbance may be either a poor condition of the points themselves, or a poor adjustment of same, or the wrong time constant of the secondary circuit. This time constant is sometimes disrupted to such an extent by a distributor suppressor that serious flashing at the points occurs, resulting in breaker point disturbance.

Ordinarily, this interference is not of the same phase or wave shape as the major intensity to be balanced out. Therefore, a breaker point filter should be employed, unless some other effective means can be used, such as improving the point condenser itself, without disturbing the "A" system from the balancing standpoint. With this type of interference removed by a filter, the major intensity can be balanced out in the regular manner.

Any metal member standing free from the body of the car for an appreciable distance adjacent to or in a position to radiate to the antenna system, will sometimes contribute great intensity. Such members are exhaust pipes, torque tubes, gear shift levers, poorly grounded instrument panels, or other metal members of the car in poor connection with the frame. If the connection between one of these radiating members is of high but constant resistance and can be balanced, then no matter how high the intensity, the balance will remain constant. If, however, the resistance of the connection is variable with the motion of the car or readily considerable, and does any change to be appreciable will change the condition of the balance, this connection must be made permanent. In the case of the freely floating exhaust pipe where the intensity received is exceedingly high, this member should be bonded to the frame through a good, low resistance and non-inductive connection. This will reduce the intensity to a reasonable degree and once balance is obtained, it will remain throughout the life of the installation.

The point in the band at which the eliminode is balanced should be ordinarily at the point of greatest interference, since at this point any error in balancing will be very apparent. A great number of roof installations require the use of a dome-light filter.

The improved Motorola dome-light filter will absolutely eliminate transmission of interference via the dome-light wire to the antenna. If after balance has been obtained, it is observed that when cutting in or off the dome-light switch of the band, a small amount of interference still remains, observe whether turning on or off the dome-light affects this interference. If so, the installation of the dome-light filter is incorrect in that a poor ground has been made or its location in the dome-light circuit is incorrect.

If this condition occurs remove the filter to secure a better ground connection to the car body.

ALIGNMENT PROCEDURE

Remove the receiver from its housing and connect the speaker and [illegible] "A" lead into the receptacle at the rear of the chassis, as shown in Fig. (1). Connect an 1100 mmf. dummy antenna across the two antenna receptacles (a) (b) Fig. 1 to replace the antenna pads located in the "MAGIC ELIMINODE UNIT."

Use an accurate, well shielded signal generator, such as Monarch Model 12 Generator, with a 200 mmf. condenser in series with the generator feeder at all times, and a good quality receiver output meter.

I. F. ALIGNMENT AT 262 K.C. — ALL MODELS

Connect the output of the generator to the grid of the 1st I.F. tube. Turn the volume control of the receiver to maximum position and [illegible] use the attenuator control of the signal generator to select a suitable voltage on the output meter connected across the voice coil.

By keeping the generator output as low as possible by means of its attenuator instead of by means of the volume control on the set, the effect of diode rectification and the application of A.V.C. voltage is very much minimized and a much better point can be found.

Now adjust the trimmer screws on the DOME FILTER for maximum reading of the output meter.

Having aligned the diode feeder, move the generator output to the grid of the first detector-oscillator tube and adjust the trimmer of the 1st I.F. TRANSFORMER for maximum output meter reading.

ALIGNMENT PROCEDURE OF OSCILLATOR, R.F. AND ANTENNA STAGES

The tracking of the Oscillator, R.F. and Antenna stages in the 1936 Motorolas is somewhat different than in previous models, therefore, extreme care must be used in making [illegible] of gang adjustments. Improper adjustment will also decrease the effective sensitivity and the selective ratio of one stage to another.

The point around which the proper alignment of the entire R.F. system revolves is the semi-fixed condenser (No. 1 Fig. 2) located at the bottom of the R.F. section of the variable condenser gang (end opposite the gear). This has been adjusted at the factory to exactly 1100 mmf.

It has purposely been placed in a position making it difficult to get at and should never be disturbed by amateur workers who are constantly sure that it has previously been improperly set and should not have the proper equipment for adjusting it. To adjust it you will find it necessary to loosen the entire variable condenser mounting and move the variable condenser forward. Then disconnect the leads to the Fixed condenser and set it with an accurate capacity bridge for exactly 1100 mmf. Reconnect the assembly and proceed with alignment.

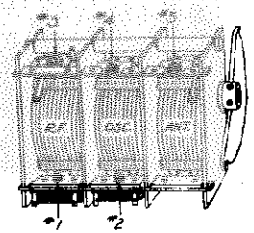

Fig. 2

Allow the signal generator to [illegible] K.C. and feed the output into the grid of the R.F. tube. Rotate the variable condenser to the closed position and adjust the pad condenser (No. 2 Fig. 2) located at the bottom of inner section of tuning condenser) for maximum output.

Set the generator to 1500 K.C. and adjust the oscillator trimmer on the top of the center section of the variable condenser (No. 4 Fig. 2) for maximum output.

Next set the generator to 600 K.C. and rotate the variable condenser until the signal is heard. Now adjust the 600 K.C. pad located at bottom of center section of tuning condenser (No. 2 Fig. 2) for maximum output.

While adjusting each the variable condensers back and forth to properly synchronize the R.F. and oscillator tuning condensers at this frequency.

Next set the generator frequency to 1400 K.C. and adjust trimmer (No. 3 Fig. 2) on the end section of tuning condenser for maximum reading of output meter. At this time it is well to check several points between 1400 K.C. and 600 K.C. and if necessary [illegible] and the end plates of the oscillator section of the tuning condenser slightly to insure perfect tracking across the frequency range.

Next couple the 1400 K.C. generator signal through the 1100 mmf. dummy antenna plugged into the antenna receptacle (a, b Fig. 1) and adjust the antenna trimmer condenser (No. 5, Fig. 2) for maximum reading of output meter.

This completes the alignment and no changes are necessary after placing chassis in housing.

Below is a table showing the input signal in microvolts required for each stage to impress 1 watt output at the voice coil of the receiver.

This will provide an easy method of checking the gain of each successive stage while aligning, and will quickly isolate any stage that falls below the normal average gain.

These readings are correct when using a 200 mmf. condenser as a dummy antenna in series with the signal generator feeder. The antenna stage reading will vary considerably with different values of dummy antenna; therefore, when using more than 200 mmf. the microvolt input required will be less and when using less than 200 mmf. the microvolt input required will be more.

GOLDEN VOICE

Average Microvolt Input	Generator Feeder Connected to Grid of	Generator Set at	Output Meter across Voice Coil
50,000 to 30,000	6-E-7	262KC	Note—Voice coil resistance is 3 ohms—1.73 volts AC equals 1 watt output.
800 to 1,400	6-A-7	262KC	
900 to 1,600	6-A-7*	262KC	
25 to 50	6-E-7	262KC	
1 to 3	Ant.	262KC	

MODEL 80

30,000 to 30,000	6-E-7	262KC	
1,000 to 2,000	6-A-7	262KC	Voice coil resistance is 3 ohms—1.73 volts equals 1 watt output.
1,200 to 2,400	6-A-7*	600KC	
50 to 80	6-E-7	600KC	
1 to 3	Ant.	600KC	

MODEL 60

30,000 to 40,000	78	262KC	Voice coil resistance is 3 ohms—1.73 volts equals 1 watt output.
800 to 1,400	6-A-7	262KC	
900 to 1,600	6-A-7*	600KC	
30 to 60	78	600KC	
1 to 3	Ant.	600KC	

MODEL 50

30,000 to 30,000	78	262KC	Voice coil resistance is 3.5 ohms—1.87 volts equals 1 watt output.
1,000 to 1,000	6-A-7	262KC	
1,200 to 1,000	6-A-7*	600KC	
60 to 100	78	600KC	
1 to 6	Ant.	600KC	

*Microvolt input required may be 10-20% more at 600KC than at 262KC. This is due to normal conversion loss in the transistor tube. If greater, replace transistor tube.

ADDITIONAL SERVICE NOTES

ADJUSTING PANEL TYPE CONTROL

The M-53 panel type control head may be adjusted by rotating the dial scale to the frequency desired for setting, for example 70 (700 K.C.), then insert a small screw driver through the hole at the bottom of the control head and push upward. This throws the dial drum out of mesh with the idler gear. While holding the dial drum in this position turn in the station desired, for example (WLW 700 K.C.), then allow the dial drum to re-mesh with the idler gear.

BALANCING SETS TO HIGH CAPACITY AERIALS

The antenna systems in all models are adjusted to an antenna capacity range from 50 MMF to 375 MMF. However, should you desire to increase this range for extremely large aerials up to 700 MMF it may be done on all models, except No. 50, by removing the chassis from the housing and turning to the left, the flat head brass screw located in the lower center of the front face of the Eliminode casting. About two turns will be sufficient. Replace chassis and readjust antenna trimmer screws. If the antenna capacity is greater than 700 MMF it will be necessary to use the antenna series condenser, Part No. M94.

REVERSING PHASE IN BALANCING SYSTEM OF MAGIC ELIMINODE

In rare cases in cars having roof aerials it may be found that when operating the balancer the interference is additive and balance cannot be obtained. When this occurs it may be corrected by removing the cover from the Magic Eliminode and locating coil No. 9, Page 1. Pull this coil upward and revolve it 180° around the two nuts as an axis and so that the two contacts face the Electrostatic shield. Be sure to replace ALL screws in Eliminode cover.

CHASSIS PICKUP

When installing Models No. 60, No. 80 and Golden Voice in the motor compartment of the car, a preliminary test for chassis pickup should be made before attempting to balance out the antenna interference.

When making this test it is necessary to use a well shielded dummy antenna plugged into the set in place of the regular antenna lead-in. The dummy antenna can be made by using a standard Motorola antenna series condenser, Part No. M-94, and short circuiting the inside connection to the shell.

Balance the antenna trimmer very carefully to this dummy so that the set is at maximum sensitivity, and then run the car motor. Should chassis pickup occur it can be isolated to the end of the car from which the flexible shafts and connections protrude.

Clean the paint around the flexible shaft bushings so that they ground perfectly to the set housing.

Keep the "A" lead away from the antenna trimmer screw openings.

Clean the cover wipers on the set housing, and if necessary, replace the small snap-in plug in the left-end of the set with an 8/32 self-tapping screw so as to secure a better ground of the cover to the rear half of the set housing.

Proceed with the Eliminode balancing only after all trace of chassis pickup is eliminated.

1100 MMF DUMMY ANTENNA

This may be made from Motorola Part No. 1439 pad condenser connected across a two-way plug Motorola Part No. 2056, and adjusted to 1100 MMF. Use the M-24 antenna capacity bridge to adjust to the correct capacity. *(NOTE)—Do not confuse this with the 1100MMF Pivot Condenser (No. 1 Fig. 2).*

POWER SUPPLY OF GOLDEN VOICE

Reference to the Golden Voice circuit diagram will show that a separate fuse rectifier is used. This is a new departure in auto radio construction and accounts for the high efficiency of this receiver; however, when replacing the 6Z4-4 rectifier be sure to use one requiring only 12 to 15 milliamperes load-ing current. Otherwise the power output of the receiver will drop when the set is in operation and the switch is turned off and immediately turned on again.

BIAS CELLS

In Models No. 50 and No. 60 the bias is supplied to the grid of the 75 tube by a 1.2 volt bias cell. This cell has an average life of two to three years; therefore, replacement is seldom necessary. Check it by replacement only, as a true voltage reading cannot be secured with an ordinary voltmeter.

VIBRATOR REPLACEMENTS

When replacing the vibrator in Models 80 and Golden Voice use only Mallory No. 84 or Radiart No. 5510. When replacing the vibrator in Models No. 50 and No. 60 use Radiart No. 5500 or Utah No. 18914.

SERVICE CABLES

Service extension cables for bench servicing of Models No. 60, No. 80 and Golden Voice may be secured from your Motorola Distributor at $1.00 net.

MODELS 50,60,80, Golden Voice Changes,Chassis

GALVIN MFG. CO.

We have been advised by the manufacturer that intermittent operation of their Motorola Golden Voice models, is due to low battery voltage delivered to the set from the car's battery. Check all connections between the car battery and the radio set to avoid undue voltage drop in the car wiring, as the OZ-4 rectifier tube will fail to start and fail to operate on a battery voltage of less than 5½ volts.

The OZ-4 tube requires 15 milliamperes or more of drain to produce ionization and proper rectification in this tube, and on battery voltages of less than 5½ volts the plate current drain of the receiver is insufficient to provide the 15 milliamperes starting current. Should the car wiring and the condition of the car battery indicate that at times the voltage may fall below 5½ volts, replace the OZ-4 rectifier tube with a 6X5 metal filament type rectifier.

With the exception of a few Golden Voice sets the filament contacts of the rectifier socket have been wired at the factory and the 6X5 rectifier may be plugged in the socket in place of the OZ-4. This will completely eliminate the difficulty due to low battery voltage.

On those Golden Voice sets not having the filament contacts of the rectifier socket wired, this wiring can be inserted by inverting the chassis and removing the cover from the hash compartment and connecting the filament contacts of the rectifier socket, as shown in the accompanying sketch. One contact to ground as indicated by the heavy arrow at the bottom of the socket and the other contact to the .5 mfd. condenser as indicated by heavy arrow at the top of the sketch. When replacing cover be sure that all screws are tight.

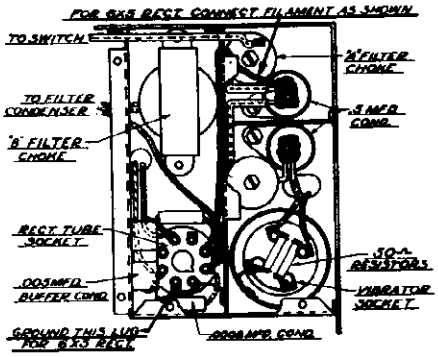

Connections when using a 6X5 in Motorola Golden Voice set

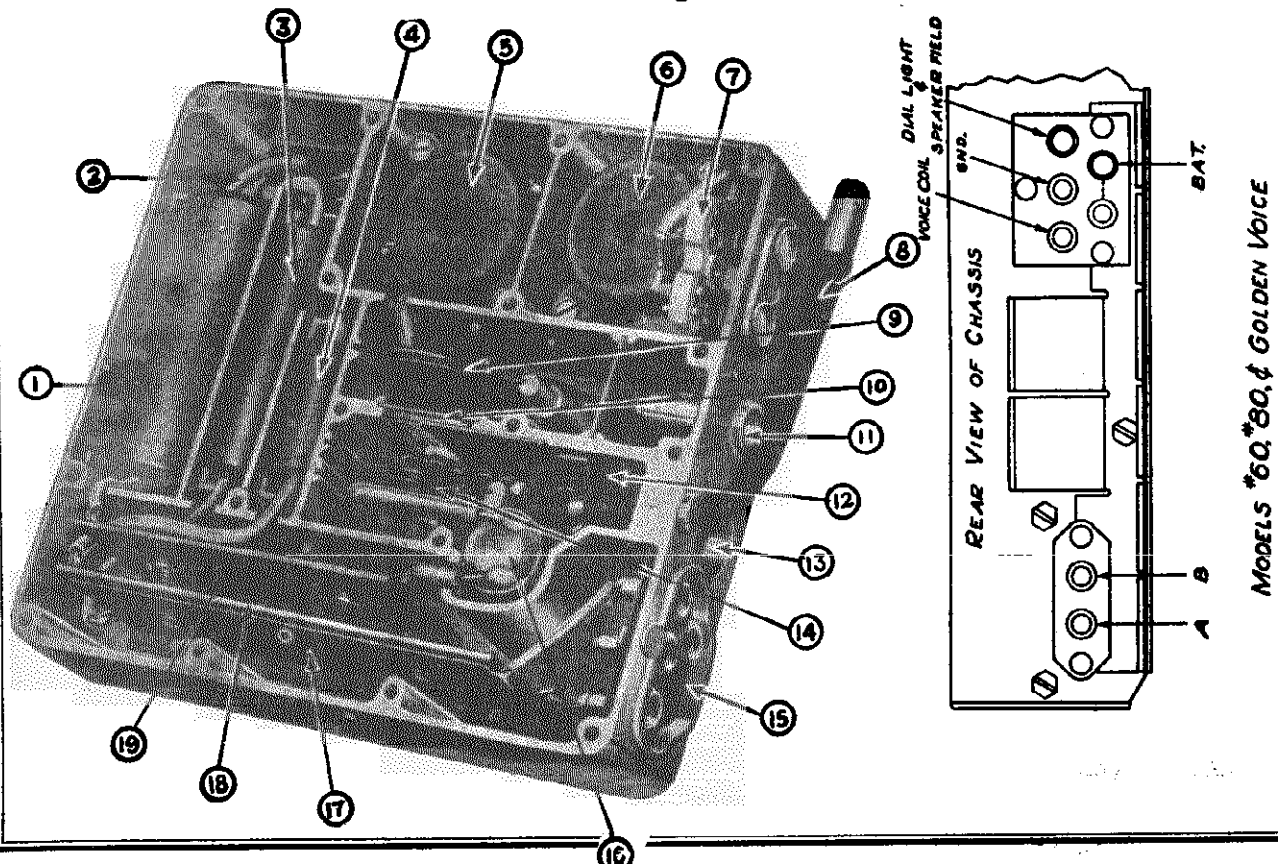

MODELS *60,*80, & GOLDEN VOICE

Fig. 1

GALVIN MFG. CO.

MODELS 50, 60, 80
Golden Voice
Coil & Transformer
Connections

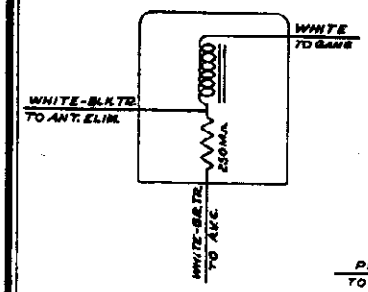

MODEL "50 ANT. COIL

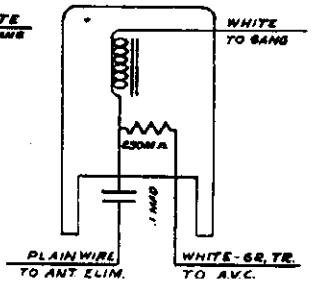

MODELS "60, "80 & GOLDEN VOICE
ANTENNA COIL

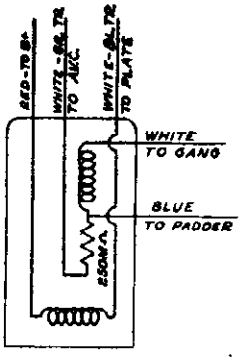

MODEL "50 R.F. COIL

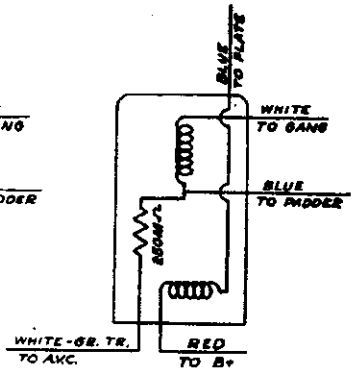

MODELS "60, "80 & GOLDEN VOICE
R.F. COIL

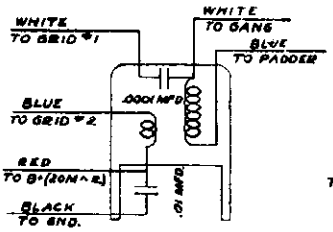

MODEL "50 OSC. COIL

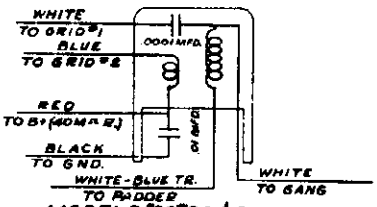

MODELS "60 "80 & GOLDEN VOICE
OSCILLATOR COIL

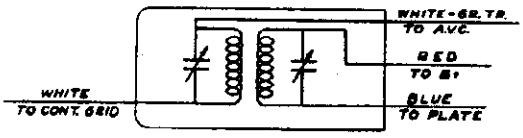

MODELS "30 "60 "80 & GOLDEN VOICE
I.F. COIL

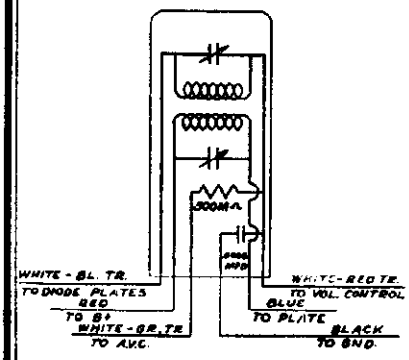

MODEL "50 DIODE COIL

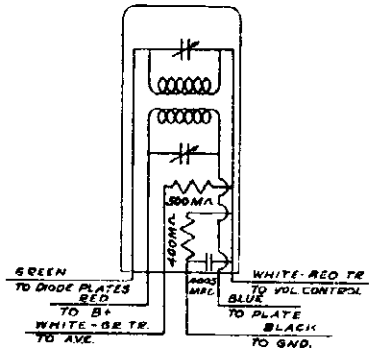

MODEL "60 DIODE COIL

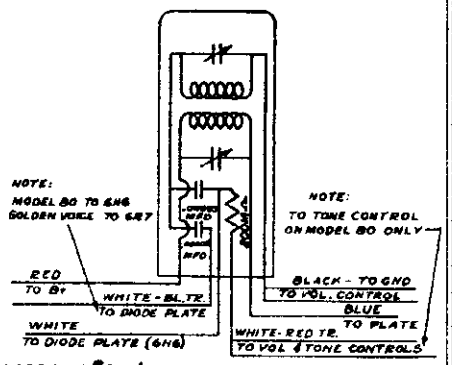

MODELS "80 & GOLDEN VOICE DIODE COIL

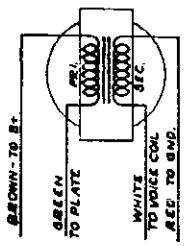

MODEL "50

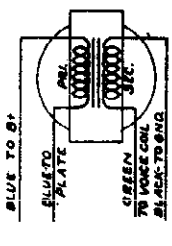

MODEL "60

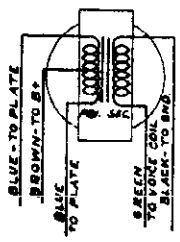

MODELS "80 & G.V.

OUTPUT TRANSFORMERS

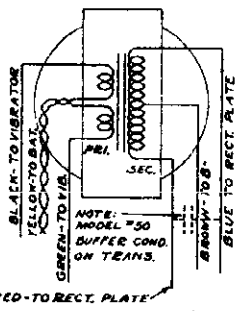

MODELS "50 "60 & "80

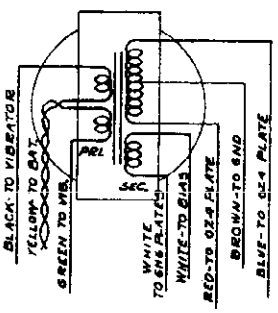

GOLDEN VOICE

POWER TRANSFORMERS

Motorola General
Installation Data

GALVIN MFG. CO.

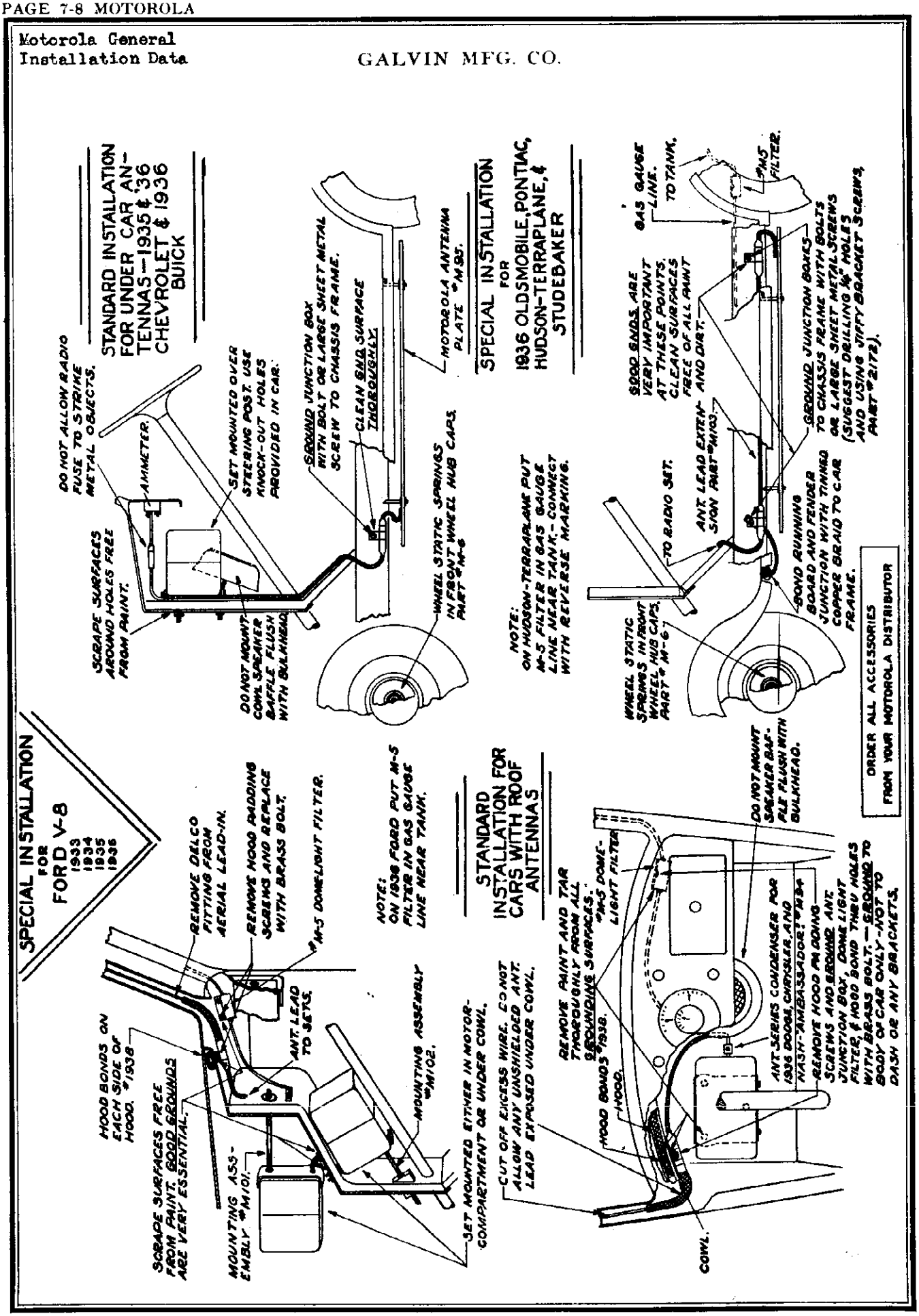

MODELS Golden Voice, 5T71, 6T12, 7T38, 7T47A, S-10

GALVIN MFG. CO.

Parts Lists

Special Accessory Group

PRICES ARE SUBJECT TO CHANGE WITHOUT NOTICE

Control Heads

Part No.	Description	List Price
M-33-A	Film type control head with shafts	$7.00
M-68	Cadillac-LaSalle control head and shafts, plate and knobs	8.00
M-66	Oldsmobile control head and shafts with knobs	8.00
M-99	Airplane type control head and shafts	7.00
M-100	Small airplane type control head and shafts	7.00
M-95	Running board antenna plate	2.95

Medallion Plates and Knobs

Part No.	Description	List Price
M-14	1934 DeSoto Medallion plate and knobs	$1.00
M-15	1934 Ford Medallion plate and knobs	1.00
M-16	1934 Walnut Medallion plate and knobs	1.00
M-17	1934 Plymouth Medallion plate and knobs	1.00
M-20	1934 Packard Medallion plate and knobs	1.00
M-21	Clamp mounting complete with knobs	1.00
M-29	1935 Ford Stand. Medallion plate and knobs	1.00
M-30	1935 Ford DeLuxe Medallion plate and knobs	1.00
M-31	1935 Plymouth (early), Dodge Medallion plate and knobs	1.00
M-31A	1935 Plymouth (late) Medallion plate and knobs	1.00
M-31B	1935 DeSoto Airstream Medallion plate and knobs	1.00
M-32	1935 Chrysler Airstream Medallion plate and knobs	1.00
M-34	1935 Chevrolet Medallion plate and knobs	1.00
M-35	1935 Pontiac Medallion plate and knobs	1.00
M-36	1935 Oldsmobile Medallion plate and knobs	1.00
M-38	1935 Studebaker Dictator Medallion plate and knobs	1.00
M-38A	1935 Studebaker President Medallion plate and knobs	1.00
M-39	1935 DeSoto Airflow Medallion plate and knobs	1.00
M-40	1934 Chrysler Airflow Medallion plate and knobs	1.00
M-40A	1935 Chrysler Airflow Medallion plate and knobs	1.00
M-46	1935 Packard "120" Medallion plate and knobs	1.00
M-57	1934-'35 Hudson-Terraplane Medallion plate and knobs	1.00
M-58	1936 Buick Medallion plate and knobs	1.00
M-59	1936 Plymouth Medallion plate and knobs	1.00
M-60	1936 Dodge Medallion plate and knobs	1.00
M-61	1936 Ford DeLuxe Medallion plate and knobs	1.00
M-62	1936 Ford Standard Medallion plate and knobs	1.00
M-63	1936 Packard "120" Medallion plate and knobs	1.00
M-64	1936 Studebaker Dictator Medallion plate and knobs	1.00
M-65	1936 Chevrolet Medallion plate and knobs	1.00
M-67	1936 Pontiac Medallion plate and knobs	1.00
M-67A	1936 Pontiac DeLuxe Medallion plate and knobs	1.00
M-69	1936 Hudson Medallion plate and knobs	1.00
M-70	1936 Terraplane Medallion plate and knobs	1.00
M-71	1936 Graham Supercharger and Cavalier Medallion plate and knobs	1.00
M-72	1936 Graham Crusader Medallion plate and knobs	1.00
M-73	1936 Reo and Hupmobile Medallion plate and knobs	1.00
M-78A	1936 Chrysler Airflow Medallion plate and knobs	1.00
M-78E	1936 Chrysler Airstream "8" Medallion plate and knobs	1.00
M-78S	1936 Chrysler Airstream "6" Medallion plate and knobs	1.00
M-82	1936 DeSoto Airflow and Custom Medallion plate and knobs	1.00
M-83	1936 DeSoto DeLuxe Medallion plate and knobs	1.00
M-84	1936 Nash "400" Medallion plate and knobs	1.00
M-85	1936 Lafayette Medallion plate and knobs	1.00
M-86	1936 Studebaker President Medallion plate and knobs	1.00
M-89	Under-rim dash mounting and knobs (film type)	1.00
M-90	Steering post control assembly and knobs	1.00

Standard Speakers

Part No.	Description	List Price
2322	5 in. speaker only	$3.25
M-96	6 in. under-cowl speaker complete	6.50
2156	6 in. speaker only	4.25
M-97	8 in. under-cowl speaker complete	9.50
2158	8 in. speaker only	6.00
M-98	10 in. under-cowl speaker complete	12.50
2329	10 in. speaker only	7.50

Overhead Speakers

Part No.	Description	List Price
1844A	1935 Ford ear-level speaker cpt.	$6.50
M-75	1936 General Motors type ear-level speaker complete	6.50
M-80	1936 Ford type ear-level speaker cpt.	6.50
M-87	1936 Nash-Lafayette type ear-level speaker complete	6.50
M-88	1936 Graham, 1935-'36 Studebaker, Reo (all models) ear-level speaker cpt.	6.50

Dual Speaker Combinations

Part No.	Description	List Price
M-92	6 in. under-cowl speaker with General Motors type ear-level speaker—or—back-seat speaker	$13.00
M-93	8 in. under-cowl speaker with General Motors type ear-level speaker—or—back-seat speaker	16.00

Miscellaneous Items

Part No.	Description	List Price
M-1	Generator condensers	$0.40
	In lots of 100	.35
M-2	Screw-in type distributor suppressors	.30
	In lots of 100	.25
M-3	Plug-in type distributor suppressors	.30
	In lots of 100	.25
M-4	Spark plug suppressors	.30
	In lots of 100	.25
M-5	Dome light filters	.60
	In lots of 100	.50
M-6	Wheel Static Eliminators	.10
M-7	Service Tuning Shafts	.22
M-8	Extension service cables (specify model No.) (Net)	1.00
M-24	Antenna capacity bridge (Net)	4.95
M-26	Ammeter condenser	.30
M-27	Floor board screen	.30
M-28	Elastic stop nuts	.05
MF-37	1935 Ford engine compartment mounting	.85
M-42	Special shielded Ford ignition coil cond.	.50
M-44	Low loss lead-in for 1935 under-car aerial	1.25
M-52	Touch-up paint kit	.50
M-53	Wire brush	1.50
M-91	Antenna junction box (corner post)	.15
M-94	1936 Dodge series antenna condenser	.30
M-101	1936 Ford engine compartment mounting	1.00
M-102	1936 Ford under cowl mounting	.40
1938	1936 Ford hood bonding strip	.10
2423	Fuse insulator ("A" lead) per doz.	.25

Model Golden Voice

Chassis

Part No.	Description	List Price
	Chassis only—less tubes	$45.00
2002	Volume control bracket	.10
2005	Volume control shaft support bracket	.10
2050	3-gang variable condenser	3.50
2051	Variable condenser mounting bracket	.15
2400	Shoulder screw (68TS)	.05
2401	Variable condenser drive gear (K-61A)	.25
2053	Variable condenser adjustment cam	.05
2168	Volume control	1.00
2023	Volume control funnel	.05
2071	Antenna coil (complete in can)	1.60
2073	R. F. coil with plate choke (cpt. in can)	1.00
2075	Oscillator coil (complete in can)	1.00
2077-B	I. F. coil (complete in can)	1.25
2080	Diode coil (complete in can)	1.75
2407	Standard metal tube sockets (state type)	.15
2408	6N6 socket (special 8-7 prong)	.15
2034	2-way receptacle	.15
2035	5-way receptacle	.25
2038	Eliminode and chassis wiper	.20
1942	D/L mounting strip	.10
2409	Grid caps for metal tubes (per doz.)	.25
2410	.00005 mfd. type "O" condenser	.15
1039	.0001 mfd. type M. T. condenser	.15
2418	.0002 mfd. type M. T. condenser	.20
1042	.0005 mfd. 1000 V. condenser	.20
1400	.01 mfd. 100 V. T. T. condenser	.12
1403	.03 mfd. 120 V. condenser	.12
2251	.01 mfd. 300 V. condenser	.15
2252	.05 mfd. 400 V. condenser	.20
2254	.05 mfd. 25 V. condenser	.15
2256	.1 mfd. 200 V. condenser	.15
2264	.25 mfd. 200 V. condenser	.30
2261	.025 mfd. 100 V. condenser	.15
2275	.01 mfd. 100 V condenser with 1 meg. resistor	.20
2276	.02 mfd. 800 V. condenser	.20
2277	.05 mfd. 120 V. condenser	.20
1777	Resistors (state value)	.15
2095	Input choke	1.25
2502	Output transformer	1.50
2167-A	Tone control	.50
2505	Sensitivity control	.50
2170	Tone control knob	.10

"B" Power

Part No.	Description	List Price
2020	Transformer can	$0.35
2021	Transformer can base	.10
2325	Power transformer	3.00
2030	Vibrator clamp	.10
2090	Filter choke (35 mills)	.70
2115	3 layer bash choke	.30
2116	3 layer bash choke	.30
1588	Power choke complete in shield	.35
2404	Vibrator	4.50
2326	Electrolytic condenser	2.50
2259	.5 mfd. 120 V. condenser	.40
2268	.005 mfd. 1600 V. condenser	.50
2411	.0008 mfd. 1000 V. M. W. condenser	.15
2033	Vibrator socket (4 prong)	.10
	O. Z. 4 Tube (Raytheon)	1.75

Outer Housing

Part No.	Description	List Price
2300	Medallion plate	$1.00
2308	Front cover	2.00
2309	Back cover	1.75
2419	Gold plug buttons (large)	.03
2420	Gold plug buttons (medium)	.03
1900	Small gold plug buttons (small)	.03
2018	Jiffy mounting bracket	.60
2019	Set mounting contact wiper	.10
2017	Set mounting studs	.05
2172	5/16-3/8 hex. head P. K. screws	.05
2171	5/16-18 hex. steel nuts (self locking)	.05
1995	Steel washers	.05

Speaker

Speaker only—see page 1.

Part No.	Description	List Price
2330	Housing only	$2.50
2331	Chrome bezel only	1.00
2332	Grill screen	.30
2333	Grill cloth	.25
2175	7 prong cable	.35
1300	Small pin prongs	.08
1301	Large pin prongs	.08
2155	Short speaker mounting stud	.30
1118	Long speaker mounting stud	.30
1797	2½ in. steel washers	.05
	⅜ in.—16 hex. head steel nuts (per doz.)	.25
2154	Spacer block (for mounting)	.10
2421	Cone and voice coil assembly	3.25
2422	Field coil	2.00
	Speaker replacement	5.00

NOTE: Due to the fact that speaker cones cannot be replaced by the service man in the field, it will be necessary to return all speakers to us for service. A charge will be made for parts and service according to the above rate (1799-1800).

Motorola Model 5T71

Part No.	Description	List Price
101	Control Head less shaft and cable	$6.00
102	BX-Flexible Shaft Complete	2.25
103	Walnut or Black Knobs	.10
104	Keys (No. 2178)—Each	.30
105	Dial Lights (No. 50)	.15
106	Lock Switch (No. 2174)	.75
107	Steering Post Clamps	.20
108	Volume Control (41-055)	1.00
109	Celluloid Dial	.25
110	Variable Condensers	3.50
111	Audio Choke (A-2016 or C-1013)	1.75
112	R. F. Coil	1.70
113	Antenna Coil	1.70
115	.01 Mfd. Tubular Condenser	.15
116	.05 Mfd. Tubular Condenser	.15
117	.003 Bakelite Condenser	.25
118	.00025 Mfd. Bakelite Condenser	.15
119	"A" Battery Cable	1.25
120	Speaker Cable	.75
121	"B" Battery Cable	.90
122	Antenna Cable	.75
123	Control Cable	1.10
124	Complete Cable Assembly	3.25
125	Resistors — State Value	.15
126	Speaker Housing	2.00
127	5X—.1 Mfd. Condenser (No. 7063)	1.00
128	Condenser Gear (K5-6)	.50
129	8 Mfd. Electrolytic Condenser	.50
130	6 Way Receptacle or Plug	.25
131	Tube Sockets	.15
132	Pinion Housing (K-5-3)	.30
133	4 Ohm Flexible Wire Wound Resistor	.20
134	Antenna Plug or Receptacle	.10

5T71 Speakers—Output Transformers—Speaker Cones

Part No.	Description	List Price
135	00990-D-16 Jensen Speaker	$6.50
135-A	Z-1158 Output Transformer for above	1.65
136	1675-D-15 Jensen Speaker	6.60
136-A	M-1675-1 Output Transformer for above	1.65
137	1250A-D-16 Jensen Speaker	6.50
137-A	Z-1154 Output Transformer for above	2.10
138	8513 Utah Speaker	6.50
138-A	5237 Output Transformer for above	2.10
139	Cone and Voice Coil Assembly for Jensen Speaker 00990	2.25
140	Cone and Voice Coil Assembly for Jensen Speaker 1675	2.25
141	Cone and Voice Coil Assembly for Jensen Speaker 1250A	2.25
142	Cone and Voice Coil Assembly for Utah Speaker 8513	2.25
	Speaker Exchange Price List	3.25

Motorola Model 6T12

Part No.	Description	List Price
201	Control Head less Shaft and Cable	$6.00
202	B. X. Flexible Shaft	2.25
203	Walnut or Black Knobs	.10
204	Keys (No. 2178) Each	.30
205	Dial Light	.15
206	Lock Switch	.75
207	Steering Post Clamp	.20
208	Volume Control (41-055)	1.00
209	Celluloid Dial (D-1)	.25
210	Control Terminal Board	.20
211	Audio Assembly (A-72-Y and C-1013)	4.00
212	R. F. Coils	1.70
213	Antenna Coil	1.70
214	Variable Condenser	3.50
215	6 Way Plug	.25
216	6 Way Socket	.25
217	Resistors — State Value	.15
218	Condenser Unit 5 x 1/10 Mfd. (No. 7063)	1.00
219	50 Mfd. Condenser	1.50
220	Tube Sockets	.15
221	R. F. Plate Choke	.50
222	.003 Mica Condenser	.25
223	.00025 Mica Condenser	.15
224	Condenser Gear (K-5-6)	.50
225	Acorn Cover Nuts	.05
226	Set Mtg. Bolts ¼"	.05
227	Pinion Housing	.30
228	Antenna Cable	.75
229	Control Cable	1.10
230	"A" Battery Cable	1.25
231	"B" Battery Cable	.90
232	Speaker Cable	.75
233	No. ¼ Amp. Fuses	.20

6T12 Speakers—Output Transformers—Speaker Cones

Part No.	Description	List Price
234	1430-D-14 Jensen Speaker	$6.50
234-A	M-1430-1 Output Transformer for above	2.55
235	1676-D-15 Jensen Speaker	6.50
235-A	M-1676-1 Output Transformer for above	2.10
236	1491-A-D-16 Jensen Speaker	6.50
236-A	Z-1155 Output Transformer for above	2.10
237	332-A-J-2 Jensen Speaker	5.50
237-A	Z-1157 Output Transformer for above	2.10
238	Cone and Voice Coil Assembly for Jensen Speaker 1430	2.25
239	Cone and Voice Coil Assembly for Jensen Speaker 1676	2.25
240	Cone and Voice Coil Assembly for Jensen Speaker 1491	2.25
241	Cone and Voice Coil Assembly for Jensen Speaker 332A	2.00
	Speaker Exchange Price List	3.25

Motorola Model 7T38

Part No.	Description	List Price
301	Control Head Less Shafts	$6.00
302	BX-Flexible Shaft	2.25
303	Knobs (All Types)	.10
304	Keys (No. 2178) Each	.30
305	Dial Lights (No. 50)	.15
306	Lock and Switch (No. 2174)	.75
307	Steering Post Clamp	.20
308	Volume Control (No. 51-024)	1.00
309	Celluloid Dial (D-1)	.25
310	Dial Light Socket	.15
311	Variable Condenser	3.50
312	Untuned Transformer	1.00
313	R. F. Coils	1.70
314	Antenna Coil	1.70
315	Choke Coil—Lattice Wound (7T-38A Only)	.35
316	Push-Pull Transformer—Input (A-105-C)	3.00
317	A-105C and C-1092 Assem. (7T-38A Only)	6.00
318	.5 Mfd. Condenser (No. 1379)	.50
319	.05 Mfd. Condenser Spec. Can (No. 1382)	.40
320	.01 Mfd. Tubular Condenser	.15
321	.05 Mfd. Tubular Condenser	.15
322	.015 Mfd. Tubular Condenser	.15
323	.003 Bakelite Condenser	.25
324	.04 Coupling Condenser	.25
325	50 Ohm Wirewound Resistor	.20
326	Resistors — State Value	.15
327	9 Prong Plug (Male) (J-9)	.50
328	9 Prong Socket (Female) (J-9)	.50
329	"A" Battery Cable (No. 953)	1.25
330	"B" Battery Cable (No. 952)	1.25
331	Speaker Cable (No. 651)	.75
332	Control Cable	1.10
333	Antenna Cable (No. 554)	.75
334	Complete Cable Assembly (No. 7T38)	5.75
335	Pinion Housing	.30
336	Tube Sockets	.15
337	2-Way Antenna Plug	.10
338	2-Way Receptacle	.10
339	R. F. Plate Choke	.50

7T38 Speakers—Output Transformers—Speaker Cones

Part No.	Description	List Price
340	1649-D-15 Jensen Speaker	$6.50
340-A	M-1649-1 Output Transformer for above	2.10
341	8507 Utah Speaker	6.50
341-A	5240 Output Transformer for above	2.10
342	8517 Utah Speaker	6.50
342-A	5240 Output Transformer for above	2.10
343	1225A-D-16 Jensen Speaker	6.50
343-A	Z-1153 Output Transformer for above	2.10
344	483A-D-15 Jensen Speaker	2.10
344-A	Z-1156 Output Transformer for above	2.10
345	1472A D-16 Jensen Speaker	8.00
345A	M-2227-1 Output Transformer for above	2.10
346	Cone and Voice Coil Assembly for Jensen Speaker 1649	2.25
347	Cone and Voice Coil Assembly for Utah Speaker 8507	2.25
348	Cone and Voice Coil Assembly for Utah Speaker 8517	2.25
349	Cone and Voice Coil Assembly for Jensen Speaker 1225A	2.25
350	Cone and Voice Coil Assembly for Jensen Speaker 483A	2.25
351	Cone and Voice Coil Assembly for Jensen Speaker 1472A	2.25
	Speaker Replacement Price List	3.25

Motorola Model 7T47A

Part No.	Description	List Price
401	Control Head	$6.00
402	BX-Flexible Shaft with Fibre Pinion	2.25
403	Knobs (All Types)	.10
404	Keys Each	.30
405	Dial Lights	.15
406	Dial Light Socket	.15
407	Lock & Switch (No. 2398)	.75
408	Control Head Clamp	.20
409	Volume Control (No. 290-B)	1.00
410	Celluloid Dial	.25
411	Variable Condenser (8-AB)	3.40
412	1st I. F. Transformer	2.00
413	Impedance Unit in Can (2nd I. F.)	2.00
414	R. F. Coils	1.00
415	Antenna Coil	.90
416	Choke Coil	.50
417	Oscillator Coil	1.00
418	20 Mfd. 30 Volt Elec. Condenser (YB-30)	.75
419	.5 Mfd. Condenser in Can (No. 1379)	.50
420	.5—.5—.25 Mfd. Condenser in Can (No. 1486)	1.20
421	.25 Mfd. Condenser (No. 1471)	.40
422	.1 Mfd. Condenser in Can	.30
423	Muter Resistor Strip (1-D 30-550)	.35
424	Muter Resistor Strips (350-300-2D)	.40
425	55 Ohm C. T. Resistor	.20
426	Tube Socket	.15
427	Pinion Housing	.30
428	Transformer (No. 1661-B)	4.50
429	"A" Battery Cable (2 Wire)	1.00
430	"B" Battery Cable (3 Wire)	1.50
431	Speaker Cable	.90
432	Antenna Cable	.80
433	Control Cable (5 Wire)	1.10
434	Cable Assembly Cpt. with Cable Housing	7.50
435	9 Prong Plug (Male 1909-J)	.50
436	9 Prong Socket (Female 1809-J)	.50
437	Antenna Plug (No. 1902)	.10
438	Antenna Socket (No. 1802)	.10
439	10/24x2¾" Set Bolts	.05

7T47A Speakers—Output Transformers—Speaker Cones

Part No.	Description	List Price
440	483-D 15 Jensen Speaker	$6.60
440-A	Z-1156 Output Transformer for above	2.10
441	2324-D-15 Stud Mounting Jensen Speaker	6.50
441-A	M-2324-1 Output Transformer for Above	2.10
442	Cone and Voice Coil Assembly for Jensen Speaker 483-A	2.25
443	Cone and Voice Coil Assembly for Jensen Speaker 2324-D-15	2.25
	Speaker Replacement Price List	3.25

Motorola Models S-10 and Home Sets—1933

Part No.	Description	List Price
1150	3 Gang Variable Condenser (R-175-A)	3.00
1151	10 Mfd. 20 Volt Electrolytic Condenser	.50
1152	J-8 Volume Control 50M Ohm (R-2083)	1.10
1153	S-10 Volume Control 500M Ohm (R-1009)	1.00
1154	S-10 Sensitivity Control (R-1008)	.80
1155	S-10 and J-8 Tone Control (13029)	.60
1156	20 Ft. Remote Control Cable (R-107)	2.50
1157	Spec. Lgth. Remote Control Cable (Per Ft.)	.15
1158	R. F. Plate Choke (RC-115)	.75
1159	S-10 and J-8 Antenna Coil Complete (AD-109-10)	.75
1160	J-8 R. F. Coil Complete (AD-111)	.60
1161	S-10 R. F. Coil Complete (RR-111)	.60
1173	S-10 Electrolytic Condenser (R-4800)	2.00
1174	25 Mfd S-10 Electrolytic Condenser (R-2520)	.75
1175	Fuse Block (F-2-B)	.15
1176	Bakelite Cap for Same (710)	.15
1177	1 Amp. Fuse (7AG)	.10
1178	Audio Transformer (0392-K)	2.50
1179	Power Transformer (2401)	4.50
1180	Filter Choke (1067-U)	2.10
1181	Filament Transformer (2399)	2.50
1182	12 Mfd. Electrolytic Cond. (No. 61130)	1.25
1183	Choke Coil for J-8 (No. 1725)	1.50
1184	Magnavox Speaker (R-2ADC)	9.00

MODELS M-33, M-33A, 34, Dual "6", Twin "8", 44, Super "6", 50, H-45, G-54, W-58, 55, 57

GALVIN MFG. CO.

PRICES ARE SUBJECT TO CHANGE WITHOUT NOTICE

Parts Lists

Motorola Models S-10 and Home Sets—1933 (Cont.)

Part No.	Description	List Price
1162	J-8 Oscillator Coil Complete (AD-112-22)	.75
1163	S-10 Oscillator Coil Complete (RO-112)	.80
1164	S-10 I. F. Coil Complete (RI-115)	1.50
1165	J-8 I. F. Coil Complete (AD-113)	1.50
1166	J-8 and S-10 Diode Coil Compl. (AD-114)	1.50
1167	Small Wood Knobs	.15
1168	Large Wood Knobs	.15
1169	Remote Control Cabinets J-8 or S-10	3.50
1170	Tonalites (R-1054)	2.50
1171	6/8 Volt Dial Lights (No. 40)	.12
1172	J-8 Electrolytic Condenser (R-31632)	3.00
1185	Spec. R-2ADC Magnavox Output Trans.	1.75
1186	Magnavox Cone and Voice Coil Assembly	2.00
1187	Rola K-7 Speaker (RK-720)	12.00
1188	Spec. T-9452 Rola Output Transformer	1.65
1189	Rola Cone and Voice Coil Assembly	3.25
1190	AC Cord and Plug	.50
1191	J-8 Amplifier Cabinet	15.00
1192	S-10 Amplifier Cabinet	10.00

NOTE: Escutcheon Plates, Dials and Drives No Longer Available.

M-33

1935 Film Type Control Head

Part No.	Description	List Price
1681	Model 57 horizontal dial scale	$0.25
1682	Model 75 horizontal dial scale	.25
1622	Model 100 horizontal dial scale	.25
M-48	Model 57 vertical dial scale	.25
M-49	Model 75 vertical dial scale	.25
M-50	Model 100 vertical dial scale	.25
1624	Celluloid indicator film shield	.25
1608	Dial drive roller	.50
1606	Helical cut gear	.35
1604	Tuning shaft and drive worm gear	.50
M-44	Low loss lead-in	1.25
1654	Dual generator condenser	.60
1807	Dial light assembly complete less bulb	.30
1007	No. 50 dial light	.15

M-33A

1936 Panel Type Control Head

Part No.	Description	List Price
2211	Roller sprocket	$0.15
2212	Volume control shaft	.10
2213	Tuning shaft	.20
2214	Idler gear	.20
2215	Idler gear bushing	.10
2221	Celluloid crystal	.15
2222	Dial film strip	.25
2223	Dial light shield (green)	.10
2223-A	Dial light shield (red)	.10
2223-B	Dial light shield (blue)	.10
2227	Film tension spring	.20
2228	Sprocket hold-down spring	.10
2225	Tuning shaft 25 x 13/16 in.	1.00
2226	Volume control shaft 26 7/16 in.	1.00
1007	No. 50 dial light (6/8 volt)	.15
1526	Flexible shaft bushings	.25
1759	K-218 wire clips (per doz.)	.15
1807	Dial light assembly less bulb	.30

Motorola Models No. 34—Dual "6"—Twin "8"

No. 34—D "6"—T "8" Control Unit

Part No.	Description	List Price
1001-A	No. 34 Control Head Complete, less Shafts	4.00
1001-B	Dual-6 Control Head Complete less shafts	4.25
1001-C	Twin-8 Control Head Complete less shafts	4.25
1002	Pair Flexible Shafts Complete ... Pr.	2.00
1003	Tone Control Knob	.10
1004	Tuning Knob	.15
1005	Key Knob — Volume	.15
1006	Keys (Per Pair)	.25
1007	Dial Lights (Round Bulb)	.15
1008	Dial Crystal	.15
1010-A	Model 34 Volume Control (K-3468)	1.00
1010-B	Dual 6 and Twin-8 Volume Control (K-66)	1.00
1011-A	No. 34 Dial Plate	.15
1011-B	Dual-6 Dial Plate	.15
1011-C	Twin-8 Dial Plate	.15
1012	Die Cast Gear for Variable Cond. (K-61)	.25
1013	Bezel Ring	.10
1014	Dial Light Assembly Complete	.50
1015	Horse Shoe Washers ... Doz.	.25
1016	Dial Pointers ... Each	.05

No. 34—D "6"—T "8" Chassis

Part No.	Description	List Price
1017-A	Model No. 34—3 Gang Variable Cond.	2.50
1017-B	Dual-6—3 Gang Variable Condenser	2.50
1017-C	Twin-8—3 Gang Variable Condenser (State Make of Condenser when ordering.)	2.50
1018-A	Model 34 Antenna Coil Complete in Can	.60
1018-B	Dual-6 & Twin 8 Antenna Coil Cpt. in Can	.60
1019	R. F. Coil	.60
1020	Oscillator Coil	.80
1021	I. F. Coil	1.50
1022	Diode Coil	1.30
1023-A	Plate Choke—Enclosed Type	.20
1023-B	Plate Choke—Open Type	.20
1024	Padder Condenser (1000 MMF) All Models	.50
1025	.2 Mfd. 200 V. Condenser (101)	.20
1025	.2 Mfd. 200 V. Condenser (101)	.20
1026	.02 Mfd. 500 V. Condenser (025)	.15
1027	.25 Mfd. 300 V. Condenser (102)	.20
1028	.01 Mfd. 100 V. Tiny Tot Condenser (100)	.12
1029	.05 Mfd. 200 V. Condenser (105)	.15
1030	.05 Mfd. 400 V. Condenser (106)	.18
1031	.02 Mfd. 200 V. Condenser (105)	.15
1032	.02 Mfd. 400 V. Condenser (106)	.15
1033	.1 Mfd. 300 V. Condenser (107)	.15
1034	.01 Mfd. 400 V. Condenser (108)	.15
1035	.1 Mfd. 200 V. Condenser (114)	.15
1036	.01 Mfd. Padder Condenser (120)	.25
1037	.007 Mfd. 500 V. Tubular Condenser (141) (Replaces K-140)	.20
1038	.001 Mfd. Mica Condenser	.15
1039	.0001 Mfd. Mica Condenser	.15
1040	.0003 Mfd. Mica Condenser	.15
1041	.0005 Mfd. Mica Condenser	.15
1042	.0005 Mfd. White Dot Condenser	.20
1043	Resistors — (State value)	.15
1044	Twin-8 Input Audio Choke (2361-A)	1.00
1045	Twin-8 Output Transformer (2351)	1.25
1046	Twin-8 Input and Output Assemb. (10707) (Replaces No. 1044 and No. 1045)	2.50
1047	Variable Condenser Adjustment Cam	.10
1048	Variable Cond. Adj. Cam Guide Bracket	.10
1049	Variable Condenser Tension Spring	.05
1050	7 Way Chassis Plug	.50
1051	8 Point Solder Lug Strip	.10
1052	7 Point Solder Lug Strip	.10
1053	2 Way Speaker Receptacle — Dual-6 (No. 1802-C)	.10
1054	8 Point Solder Lug Strip with Tone Control Spring M-34	.15

No. 34—D "6"—T "8" "B" Power Unit

Part No.	Description	List Price
1055	Twin-8 "B" Power Unit Complete	12.00
1056	Dual-6 "B" Power Unit Complete	12.00
1057	Power Transf. (D-6 & T-8) (No. 2552)	2.50
1058	Power Transformer (D-6) (P-2534)	2.00
1059	Power Transformer (T-8) (P-2534MS)	2.25
1060	Power Transformer (M 34 Only) (P-2463)	2.00
1061	Radiart Vibrators M-34 (No. 3460-A)	4.50
1062	Elkonode Dual 6 & Twin-8 (T-33)	4.50
1063	Radiart Vibrator Dual-6 (No. 3399 and 3417)	4.50
1064	Filter Choke (5135-2543) (Interchangeable D-6 and T-8)	.70
1065	Filter Choke M-34 (No. 4430)	.60
1066	Filter Block for Twin-8 (No. 8825)	1.80
1067	Filter Block for Dual-6 (No. 8426)	1.75
1068	Filter Block M-34 (No. 34)	1.20
1069	77-E Lattice Wound "B" Hash Choke Assembly	.25
1070	Dual 77-E Lattice Wound "B" Hash Choke Assembly	.50
1071	Hash Choke (No. 4386)	.30
1072	Hash Choke M-34 (No. 4402)	.30
1073	Hash Choke M-34 (No. 4403)	.30
1074	Twin-8 Hash Chokes—Flat Type	.20
1075	Elkonode Shock Absorber Rubber Ring	.10
1076	4 Way Plug for Power Pack	.20
1077	Radiart Vibrator Socket	.10
1078	Mallory Elkonode Socket	.10
1079	4 Way Floating Type Elk. Recept. (741)	.25
1080	Bakelite Shell for Elkonode Recept. (716)	.20
1081	.5 Mfd. 120 V. Condenser (126)	.25
1082	.01 Mfd. 1600 Volt Condenser (131)	.25
1083	.5 Mfd. 120 V. Tubular Condenser (113)	.22
1084	.5 Mfd. 120 V. Eliptical Condenser (116)	.25
1084	.5 Mfd. 120 V. Electrolytic Cond. (116)	.25
1085	.02 Mfd. 1000 V. Condenser (117)	.20
1086	.5 Mfd. 120 V. Tubular Condenser (127)	.25
1087	.02 Mfd. 1000 V. Buffer Condenser (128)	.25
1088	Dual .5-.01 Mfd. Condenser (109 or 119)	.60

No. 34—D "6"—T "8" Outer Housing, Cable and Filters

Part No.	Description	List Price
1090	Rear Cover for Twin-8	.50
1091	Front Cover for Twin-8	.40
1092	Dual-6 Back Cover	.50
1093	Dual-6 Front Cover	.50
1094	Dual-6 Speaker Plug (No. 2902)	.10
1095	Front Cover Only M-34 (No. 539)	.50
1096	Front Cover Cpt. less Speaker M-34 (539)	1.10
1098	Hash Wiper Springs ... Per Doz.	.25
1099	Dual 6 Term. Strip—5 Term. (No. 1731)	.10
1100	M-34 Term. Strip—2 Terminal (No. 1730)	.10
1101	Twin-8 Housing Terminal Strip (No. 1742)	.15
1102	"A" Battery Cable (Yellow) D-6 and T-8	.20
1103	"A" Bat. Cable (Black) D-6 and No. 34	.15
1104	3 Wire Speaker Cable	.25
1105	3½ Ft. Shielded Ant. Lead, D-6 and T-8	.55
1106-A	Antenna Lead M-34 (Male)	.30
1106-B	Antenna Lead M-34 (Female)	.20
1107	Solder Lug Strip 3 Pt. No. 34—D-6 and T-8	.10
1108	7 Way Chassis Receptacle	.50
1109	1 Way Antenna Receptacle	.10
1111	.004 Mfd. 300 V. Cond. and Choke (111)	.25
1112	.01 Mfd. 300 V. Cond. and Choke (112)	.25
1113	.001 Mfd. Red Dot Condenser	.15
1114	.005 Mfd. Yellow Dot Condenser	.20

No. 34—D "6"—T "8" Speakers

Part No.	Description	List Price
1115	Twin-8 Speaker Housing	.90
1116	Twin-8 Grill	.40
1117	Twin-8 Speaker Short Mtg. Stud	.20
1118	Twin-8 Speaker Lug Mtg. Stud	.50
1119	Model 34 Quam Nichols Speaker (K-346)	3.75
1120	Dual-6 Jensen or Rola Speaker (K635)	4.50
1121	Twin-8 Magnavox or Rola Speaker (K-840)	6.00
1122	T-8 Speaker Cpt. in Housing with Mgt. Bolts	8.30
1123	D-6 Speaker Cpt. Cover with Conn. Plug	5.50
1124	34 Front Cover Cpt. with Speaker and Plug	5.00
1125	Model 34 Output Transformer (T-348)	1.00
1126	Z-1033 Dual-6 Output Transformer	1.25
1127	Output Transf. for T-8 (See 1045 or 1046)	
1128	Cone and Voice Coil Assembly for Mod. 34	1.60
1129	Jensen Cone and Voice Coil Assembly for Dual-6	2.00
1130	Rola Cone and Voice Coil Assembly for Dual-6	2.00
1131	Rola Cone and Voice Coil Assembly for Twin-8	2.25
1132	Magnavox Cone and Voice Coil Assembly for Twin-8	2.25
	Model 34 Speaker Replacement	1.85
	Model D6 Speaker Replacement	2.75
	Model T8 Speaker Replacement	4.10

Motorola Models No. 44 and Super "6"

No. 44 and Super "6"—Control Unit

Part No.	Description	List Price
901	Control Head Complete	$6.00
902-A	32" Flexible Shaft (Model 44)	3.25
902-B	36" Flexible Shaft (Model S-6)	3.50
903	Spacer Block	.20
603	Clutch Spring	.10
904	Filler Ring	.20
905	Hexagon Nut (Eccentric)	.15
906	Convex Glass Crystal	.25
907	Chrome Plated Bezel	.25
908	Mounting Strap	.25
909-A	Dial Plate (Model 44)	.15
909-B	Dial Plate (Model S-6)	.15
910	Special Black Knob	.20
911	Condenser Gear, Bakelite (State Coarse or Fine Tooth)	.50
912	Keys (K-01) ... Each	.20
913	Dial Light (No. 50)	.15
914	Drive Pinion	.20
915	500,000 Ohm Volume Control (8651-C)	1.00
916	Dial Light Socket	.15
917	Dial Light Assembly Complete	.30

No. 44 and Super "6"—Chassis

Part No.	Description	List Price
918	2 Gang Variable Condenser (446M)	2.00
919-A	Model 44 Antenna Coil Complete in Can	1.00
919-B	Model S-6 Antenna Coil Complete in Can	1.00
920-A	Model 44 Oscillator Coil Complete in Can	.90
920-B	Model S-6 Oscillator Coil Complete in Can	.90
921	1st I. F. Coil Complete in Can	1.25
922	2nd I. F. Coil Complete in Can	1.25
923-A	Model 44 Diode Coil Complete in Can	1.00
923-B	Model S-6 Diode Coil Complete in Can	1.00
924	.0005 Mfd. Midget Mica Condenser	.15
925	Alum. Tube Shield and Base (No. 01090)	.20
926	Audio I. P. Trans. (No. 2311) (S-6 Only)	1.30
927	.1 Mfd. 200 V. Condenser (No. 1649)	.15
928	.25 Mfd. 300 V. Tubular Cond. (No. 1848)	.20
929	.01 Mfd. 300 V. Tubular Cond. (No. 1741)	.15
930	.05 Mfd. 400 V. Tubular Cond. (No. 1999)	.15
931	.05 Mfd. 300 V. Tubular Cond. (No. 1972)	.15
932	.01 Mfd. 400 Volt Tubular Condenser	.15
933	2M-20M-20M Ohm Candohm Resistor (No. 4220A)	.50
934	2M-20M-20M-370 Ohm Candohm Resistor (No. 4422)	.60
935	Any Resistor (State Ohmage)	.15
936	10 Mfd. Electrolytic Condenser (No. 1020)	.30
937	1 Way Plug	.10
938	4 Way Plug	.20
939	Tube Socket, State Type	.10

No. 44 nd Super "6"—"B" Power Supply

Part No.	Description	List Price
940-A	44 Power Pack Cpt. in Can with Cover	12.00
940-B	S-6 Power Pack Cpt. in Can with Cover	12.00
941	2 Way Plugs	.20
942	T-60 or 70-B Elkonode in Can with Plug	5.50
943	T-35 Elkonode in Cardboard Container with Leads (Model 44)	3.75
944	Vibrator (Utah) (G-536)	5.00
945	Power Transformer (No. 2230) (44 Only)	2.25
946	Power Transformer (No. 2270) (S-6 & 44)	2.25
947	Power Transformer (Utah) (No. 1092)	1.95
948	Filter Choke (No. 2060-F)	1.00
949	Filter Choke Coil (Utah) (No. 4267)	1.00
950	Axley only for T-35 Elkonode	.80
951	8/12 Mfd. 300 V. Electrolytic Cond. (8123)	1.50
952	8/4 Electrolytic Condenser (No. 8420)	1.20
953	4/6 Mfd. Electrolytic (Utah) (No. 46200)	1.00
954	.5 Mfd. 160 V. Tubular Cond. (1784)	.50
955	.01 Mfd. 1600 V. Tubular Cond. (1789)	.40
956	5 Prong Socket with Spacer Pin	.15
957	R. F. Choke Coil Cpt. in can with Condenser and Leads	.70

Outer Housing, Cable and Filters

Part No.	Description	List Price
959	Model 44 Front Cover Cpt. less Speaker	.50
960	Model S-6 Front Cover Cpt. less Speaker	.40
961-A	Model 44 Back Cover	.40
961-B	Model S-6 Back Cover	.40
962	2 Way Receptacle (J-1802)	.15
963	4 Way Receptacle (No. 1804-C)	.20
964	Antenna Plug Shield Assembly	.35
965	Polarizing Receptacle (No. 1825)	.25
966	Cable Terminal Strip (3-T)	.10
967	"A" Battery Cable (Black)	.15
968	Speaker Cable (S-6 Only)	.25
969	Antenna Loom in Running Lengths, per ft.	.10
970	5½ Ft. Antenna Shielded Loom	.35
971	Red Dot Condensers, Mica	.15
972	.25 Mfd. 160 V. Tubular Condenser	.20
973	Dial Lite Filter Choke and Condenser	.25
974	20 Turns No. 12 Wire Eliminode Choke (Used on "A" Battery and Power Supply)	.20
975	26 Turns No. 16 W. Hash Eliminode Choke	.20
976	Volume Control Bracket	.10
977	Clutch Spring for Shaft Cone (No. 20-C)	.05
978	S-6 Speaker Housing (8")	.75
979	Speaker Grill 8" for S-6 Only	.60
980	Short Speaker Stud	.20
981	Long Speaker Stud	.30
982	Thumb Screw for Stud Assembly	.10
983	Model 44 Speaker on front cover with plug connector complete	3.75
984	S-6 Speaker in Housing with Mtg. Studs and Cable Complete	8.50
985	Utah Model 44 Speaker less O. P. Transf. (No. 2060)	3.00
986	Magnavox Speaker less O. P. Transf. (44)	3.00
987	Utah Speaker for S-6 (Less Transf.) (6510)	6.50
988	Output Transformer for 44 (No. 7121)	1.25
989	Output Transf. for S-6 (No. 7202)	1.50
990	Cone and Voice Coil Assembly for No. 2060 Speaker	1.60
991	Cone and Voice Coil Assembly for Magnavox Speaker	1.60
992	Cone and Voice Coil Assembly for No. 6510 Speaker	2.00
	44 Speaker Replacement	3.25
	56 Speaker Replacement	4.25

Model "50"

Chassis

Part No.	Description	List Price
	Chassis only—less tubes	$27.50
2349	Tube shield	.40
2345	Variable condenser mounting bracket	.25
2050	3 gang variable condenser	3.50
2053	Variable condenser adjustment cam	.05
2400	Shoulder screw 68TS	.05
2054	Variable condenser tension spring	.10
2336	Volume control	1.00
2023	Volume control funnel	.05
2339	Antenna coil (complete in can)	1.50
2073	R. F. coil (complete in can)	1.00
2074	Oscillator coil (complete in can)	1.00
2340	I. F. coil (complete in can)	1.25
2337	Diode coil (complete in can)	1.50
2320	Output transformer	1.00
599	Glass-tube sockets (state type)	.10
2402	Grip caps (per doz.)	.25
1815	Bias cell	.20
1777	Resistors (state value)	.15
1039	.0001 mfd. MT condenser	.15
1040	.0003 mfd. MT condenser	.15
1041	.0005 mfd. MT condenser	.15
2269	.007 mfd. 500 V. condenser	.20
2252	.05 mfd. 400 V. coupling condenser	.20
2255	.01 mfd. 1000 V. condenser with 500M ohm resistor and mounting strap	.50
2256	.1 mfd. 200 V. condenser	.15
2258	.25 mfd. 300 V. condenser	.20
1403	.03 mfd. 100 V. condenser	.15
2254	.05 mfd. 25 V condenser	.15
2251	.01 mfd. 300 V. condenser	.15

"B" Power

Part No.	Description	List Price
2020	Transformer can	$0.35
2021	Transformer can base	.10
2030	Vibrator hold-down clamp	.10
2316	Filter choke	.60
2315	Power transformer	2.00
1500-C	Power choke (complete in shield)	.35
2404	Vibrator	4.50
2317	Electrolytic condenser	1.40
2116	3 layer hash choke	.30
2272	.01 mfd. buffer condenser	.25
2259	.5 mfd. 120 V. condenser	.40
2093	Vibrator socket (special)	.10

Speaker

Part No.	Description	List Price
	Speaker only—see page 1.	
2333	Speaker plug (3 way) and cap	$0.10
2323	3 Way Socket	.10
2321	Grill screen	.10
2319	Grill cloth	.15
2425	Cone and voice coil	1.75
2426	Field coil	2.00
	Speaker replacement	2.00

NOTE: Due to the fact that speaker cones cannot be replaced by the service man in the field, it will be necessary to return all speakers to us for service. A charge will be made for parts and service according to the above rate (1799-1800).

Outer Housing

Part No.	Description	List Price
2341	Front cover only	$1.75
2342	Back cover	1.25
1500	Plug button (small)	.03
1792	Plug button (large)	.03
2018	Jiffy mounting bracket	.60
2019	Set mounting contact wiper	.10
2017	Set mounting bolts	.05
2171	5/16 in. hex. head steel nuts	.05
2172	5/16 in. x ⅝ in. H. H. P. K. screws	.05

Cables and Eliminode System

Part No.	Description	List Price
2334	Choke coil (resistance wire)	$0.25
2333	Choke coil (enameled wire)	.25
2118-A	Speaker field choke	.20
2119	Speaker voice coil choke	.20
2120	"A" lead filter choke	.25
1403	.03 mfd. 100 V. condenser	.15
2271	.5 mfd 120 V. condenser	.40
2270	.1 mfd. 25 V. condenser	.15
2313	600 mmfd. padder condenser	.40
2310	Large prong dial light receptacle	.10
2311	Small prong antenna receptacle	.10
2176	Antenna loom complete	.75
2417	"A" cable complete with fuse	.40
2416	30 ampere fuse	.05

Models H-45—G-54—W-58 Home Sets—1934

Part No.	Description	List Price
1201	2 Gang Variable (For G-54—W-58) (No. 5-456)	2.00
1202	2 Gang Variable (For H-45) (No. 5-24000)	2.00
1203	Vol. Control (G-54—W-58) (No. 5100)	1.00
1204	Volume Control (H-45) (No. 4338)	1.00
1205	Tone Control (No. 13037)	.60
1206	Power Transformer (No. 5523)	2.25
1207	Filter Choke (No. 2543-C)	.70
1208	Electrolytic Cond. (G-54—W-58) (5812)	2.50
1209	Electrolytic Condenser (H-45) (No. 4310)	2.00
1210	I. F. Coil Complete in Can (No. 45-L)	1.30
1211	Diode Coil Complete in Can (No. 45-D)	1.30
1212	Antenna Coil Complete in Can (No. 45-A)	.55
1213	R. F. Coil Complete in Can (No. 45-A)	.55
1214	Oscillator Coil Complete in Can (45-O)	.70
1215	Any Socket — (State Marking)	.10
1216	.0005 Mfd. Mica Condenser	.15
1217	.0001 Mfd. Mica Condenser	.12
1218	.5 Mfd. Condenser (126)	.22
1219	.007 Mfd. Condenser (141)	.12
1220	.01 Mfd. Condenser (100)	.12
1221	.25 Mfd. Condenser (1773)	.20
1222	.05 Mfd. Condenser	.18
1223	.2 Mfd. Condenser	.20
1224	.05 Mfd. Condenser	.15
1225	Mallory Bias Cell	.20
1226	Any Resistor (State value)	.10
1227	5000 Ohm Red Devil Resistor 10 Watt	.30
1228	Cordohm and Plug for H-45	1.00
1229	A. C. Cord and Plug (G-54 and W-58)	.50
1230	5" Dynamic Speaker for H-45 (A-437)	5.50
1231	Output Transformer for Same (T-467)	.85
1232	Cone and Voice Coil Assembly (H-45)	1.00
1233	8" Dynamic Speaker for (G-54 and W-58) (A-383)	6.50
1234	Output Transformer for Same (T-610-A)	1.25
1235	Cone and Voice Coil Assembly (G-54—W-58)	2.25
1236	Knobs for H-45 (No. 259-260) ... Pair	.25
1237	Knobs for G-54 and W-58 (No. 137) ... Each	.10
1238	Celluloid Dial for G-54—W-58 (No. 520)	.20

Motorola Model No. 55

Part No.	Description	List Price
601	Control Head	$6.00
602	Flexible Shaft Complete with Pinion	3.50
603	Clutch Spring	.10
604	Shielded Dial Light Wire Cpt. with Dial Light Socket	.50
715	Volume Control	1.00
606	2 Gang Variable Condenser	2.00
607	Antenna Coil Complete in Can with Leads	1.00
608	Oscillator Coil Cpt. in Can with Leads	.80
609	I. F. Transformer Complete in Can	1.25
610	Diode Feeder Complete in Can	1.25
611	Resistors — State Value	.15
612	Tube Socket — State Type	.10
613	.05—160 Volt Condenser	.20
614	.015—200 Volt Condenser	.18
615	.0005 Mica Condenser	.12
616	.05—300 Volt Condenser	.20
617	.01—200 Volt Condenser	.18
618	.25—160 Volt Condenser	.20
619	.01 Mfd. 160 Volt Condenser	.15
	T-31 Elkonode (55A)	3.75
620	.5 Mfd. 160 Volt Condenser	.25
621	.0025 Mfd. Hash Filter Condenser	.20
622	2 Point Terminal Strip	.12
623	Filter Choke (No. 1663-G)	1.00
624	Power Transformer (No. 2149)	2.00
625	No. 34 Elkonode	3.75
626	Power Pack Assembly Complete	12.00
627	Dual 8 Mfd. Electrolytic Condenser	1.50
628	8-30 Mfd. Electrolytic Condenser	1.70
629	Hash Filter Choke	.30
630	.01—1600 V. Buffer Condenser	.50
631	"A" Solenoid Choke	.25
632	.25 Mfd. 300 Volt Condenser	.35
633	Antenna Cable	.40
634	"A" Cable—3 Lead Shield	.80
635	5/16" Oval Head Set Mtg. Bolts	.05
636	Magnavox Dynamic Speaker No. 150-D-35	6.25
637	No. 2150 Output Transformer	1.35
638	Cone & Voice Coil Assembly for Magnavox Speaker No. 150	2.00
	Speaker Replacement Charge	3.25

Motorola Model 57

Part No.	Description	List Price
1770	Model 57 control head cpt. less shafts	$4.00
1761	Pair flexible shafts cpt. (30 in. long)	2.00
1761-A	Pair flexible shafts cpt. (24 in. long)	2.00
1761-B	Pair flexible shafts cpt. (18 in. long)	2.00
1761-C	Pair flexible shafts cpt. (36 in. long)	2.00
1003	Tone control knob (K-30)	.10
1509	Iron core I.F. coil cpt. in can	2.00
1510	Iron core diode coil cpt. in can	2.00
1451	Small tube shield (Fin. type)	.15
1455	Dual tube shield (Fin. type)	.20
1429	750 mfd. padder condenser (Red dot)	.50
1691	250 mmf. padder condenser (Blue dot)	.50

©John F. Rider, Publisher

PRICES ARE SUBJECT TO CHANGE WITHOUT NOTICE

GALVIN MFG. CO.

MODELS 60,61,88,62,7
Parts Lists

Motorola Model 57 (Cont.)

Part No.	Description	List Price
1473-4	Volume control shaft cpt.	1.00
1473-5	Tuning shaft cpt.	1.00
1004	Tuning knob (Black finish)	.20
1005	Key knob Vol. control (Black finish)	.30
1006	Keys (Per pair)	.25
1007	Dial light (No. 50)	.15
1008	Dial crystal	.15
1557	Model 57 dial plate only	.15
1013-A	Bezel ring and cork gasket	.10
1769	Dial light assembly cpt. less Bulb	.30
1016	Dial pointers (K-9)	.05
1015	Horseshoe washers (per dozen)	.25
1012	Die cast gear for variable cond. (K-41-A)	.25
1449	Model 57 Volume control	1.00
1771	Dial plate and pointer assembly cpt.	.35
1758	Idler gear and shaft assembly	.15
1326	Bushings for end of flexible shafts	.30
1420	Drive shaft pinion fitting	.15
1422	Volume control shaft fitting	.15
1756	Mounting bracket for steering post	.15
1760	Pinion fitting for key	.15
1762	Flexible shafts any length (per ft. each shaft)	.40
1772	Steel gears	.05
1773	Tin sleeves for vol. control shaft	.05
1774	1/4 x 5/8 in. fill. head screw for mtg. control	.03

Chassis

Part No.	Description	List Price
1442	2 gang variable condenser	$2.00
1053	2 way chassis receptacle (1802)	.10
1441	2 way speaker receptacle (1 large and 1 small prong)	.10
1109	1 way Antenna receptacle (91-5)	.10
1776	Sockets (state type)	.10
1520	Variable tension spring	.05
1502	Antenna coil cpt. in can	.60
1503	Oscillator coil cpt. in can	.80
1507	I.F. coil cpt. in can	1.50
1508	Diode coil cpt. in can	1.50
1574	New style air core antenna coil cpt. in can	.70
1670	Iron core ant. coil cpt. in can	2.00
1511	New type oscillator coil cpt. in can	.80

Outer Can, Cables and Filters

Part No.	Description	List Price
1457	Outer can only	$1.25
1458	Front cover only	1.25
1459-C	Back cover assembly cpt.	3.80
1458-C	Front cover cpt. with speaker and grill	5.50
1459-M	Back cover cpt. for 62 model	3.75
1842	Black plug buttons	.03
1393	1 way ant. plug (91-P and lug)	.10
1392	2 way elim. plug (1902 and lug)	.10
1443	2 way speaker plug and cap	.10
1341	"A" battery cable and shield (36 ins. long)	.25
1343	"A" battery cable and shield (26 ins. long)	.20
1343-C	Shielded antenna lead in less bushings	.50
1545	3 Ft. antenna lead (replaces above)	.35
1500	Small cover hold down buttons	.05
1113	.001 red dot mica condenser	.15
1408	.5 mfd. 25 V. condenser	.50
1548	.5 mfd 25 V. condenser (replaces above)	.25
1369	Hash choke (Pie wound in fibre container)	.15
1497-A	Hash choke (Round)	.20
1497-B	Hash choke (Round)	.20
1493-C	Hash choke (No. 15 wire)	.30
1826	Set mtg. studs (K-5516)	.05

Part No.	Description	List Price
1815	Bias cell	.20
1803	Bias cell mounting cup and terminal	.10
1520-B	Terminal mtg. strip and cone control spring	.10
1040	.003 mfd mica condenser	.15
1042	.0005 mfd mica condenser (White dot)	.20
1038	.001 mfd mica condenser	.15
1046-A	.00112 mfd mica condenser (Green dot)	.20
1400	.01 mfd 100 V. condenser	.12
1404	.05 mfd 400 V. condenser	.10
1416	.01 mfd 300 V. condenser	.15
1417	.1 mfd 100 V. condenser	.15
1418	.1 mfd 300 V. condenser	.20
1026	.02 mfd 300 V condenser (K-025)	.15
1816	.004 mfd 500 V. condenser (K-152)	.15
1517	.25 mfd 25 V. condenser	.20
1569	.01 mfd 250 V. condenser	.15
1409	.05 mfd 25 V. condenser	.15
1034	.01 mfd 25 V. condenser (K-100)	.15
1027	.25 mfd 300 V. condenser (K-102)	.20
1777	Resistors (state value)	.15

"B" Power Unit

Part No.	Description	List Price
1836	Power transformer (2985-A)	$2.00
1837	Filter choke (C-1492)	.60
1424	(Electrolytic condenser) (4 and 2 mfd at 250 volts)	1.00
1540	(Electrolytic condenser) (5, 5 and 10 mfd. at 200/200 and 25 volt). New	1.50
1453	Transformer can only	.50
1460	Elkonode socket case	.20
1461	Top cover for same	.05
1462	Bottom cover for same	.05
1350	Elkonode contact washer	.05
1784	Mallory Elkonode (53T)	4.50
1785	Radiart Vibrator (5815-B)	4.50
1405	.5 mfd 50 Volt condenser	.35
1413	.01 mfd 1600 Volt condenser	.25
1516	.02 mfd 400 Volt condenser	.20
1825	Hash choke (4506)	.30
1787	Lattice wound hash choke assembly (77-B)	.25
1838	18 T. No. 20 wire choke coil	.10
1493-A	20 T. No. 18 wire choke coil (in tube)	.20
1783	Perforated spun tube shield (G-621-U)	.15
1794	Shakeproof lockwashers (4018-32)	.05
1795	2 1/4 in. steel washers (K-225)	.03
1796	8 x 1/2 in. oval hd. self tapping screws (per 100)	1.00
1564	Sponge Rubber (per doz.)	.25

Speaker

Part No.	Description	List Price
1550	5 in. Dynamic speaker only	$3.75
1550-A	Speaker cpt. with 2 way plug	3.90
1521	Wire screen for grill	.10
1551	Grill cloth	.10
1552	Cardboard gasket	.05
1458-C	Speaker cpt. mt'd. on front cover	5.50
1839	Output transformer only	1.00
1840	Cone and voice coil assembly (replaced at factory)	1.75
1841	Speaker field coil (replaced at factory)	2.00
	Speaker Replacement	1.85

NOTE Due to the fact that dust-proofed-type speaker cones cannot be replaced by the service man in the field, it will be necessary to return all speakers to us for service. A charge will be made for parts and service according to the above rate (1799-1800).

Model "60"

Chassis

Part No.	Description	List Price
	Chassis only—less tubes	$50.00
2011	Tube shield (fin type)	.30
2013	Tube shield (formed)	.20
2050	3-Gang variable condenser	3.50
2051	Variable condenser mounting bracket	.15
2400	Shoulder screw (68TS)	.05
2055	Variable condenser adjustment cam	.05
2401	Variable condenser drive gear (K61A)	.25
2054	Variable condenser tension spring	.10
2166	Volume control	1.00
2023	Volume control funnel	.05
2071	Antenna coil (complete in can)	1.60
2073	R. F. coil (complete in can) includes plate choke	1.80
1403	.03 mfd. 100 V. TT condenser	.12
2275	.003 mfd. 100 V. condenser	.12
2251	.01 mfd. 300 V. condenser	.15
2254	.05 mfd. 25 V. condenser	.15
2278	.01 mfd. 100 V. condenser and 500M ohm resistor (with mounting straps)	.30
2256	.1 mfd. 200 V. condenser	.15
2257	.1 mfd. 25 V. condenser and mounting strap	.20
2258	.25 mfd. 300 V. condenser	.30
2263	.03 mfd. 300 V. condenser	.15
2267	.1 mfd. 25 V. condenser	.15
1777	Resistors (state value)	.15
2170	Tone control knob	.10
2146	Tone control terminal strip	.10
2148	Tone control screw	.10
2014-C	Tone control assembly complete	.40

"B" Power

Part No.	Description	List Price
2020	Transformer can	$0.35
2021	Transformer can base	.10
2030	Vibrator hold-down clamp	.10
2099	Power transformer	3.50
2100	Filter choke (70 mills)	.70
2115	3 layer hash chokes	.30
2116	3 layer hash chokes	.30
1588-C	Power choke complete in shield	.35
2404	Elkonode (94) Mallory	4.50
2188	Electrolytic condenser	1.60
2259	.5 mfd. 120 V. condenser	.40
2260	.005 mfd. 1600 V. condenser	.40
2053	Vibrator socket (special)	.10
1776	No. 94 socket	.10

Outer Housing

Part No.	Description	List Price
2015	Front cover (less ornaments)	$1.50
2016	Rear cover	1.25
2196	Medallion plate	.50

Part No.	Description	List Price
2076	Oscillator coil (complete in can)	1.00
2077	I. F. coil (complete in can)	1.25
2078	Diode coil (complete in can)	1.60
2094	Output transformer	1.25
1776	Glass tube sockets (state type)	.10
2034	2-way receptacle	.15
2035	5-way receptacle	.25
2038	Eliminode and chassis wiper	.20
1929	Lug D/L Mounting Strip	.10
2402	Grid caps (per doz.)	.25
1815	Bias cell	.20
2040	D/L Mounting and B. C. cup	.15
1039	.0001 mfd. type M. T. condenser	.15
2405	.00015 mfd. type M. T. condenser	.15
1040	.0003 mfd. type M. T. condenser	.15
1041	.0005 mfd. type M. T. condenser	.15
2197	Name plate	.50
1300	Green plug buttons (small)	.03
1085	Green plug buttons (large)	.03
2018	Jiffy mounting bracket	.60
2019	Set mounting contact wiper	.10
2017	Set mounting bolts	.05
2412	Green plug buttons (Eliminode)	.03
2172	Spec. 5/16 set mounting S. T. screws	.05
2171	Spec. self-locking steel nuts	.05

Speaker

Speaker only—see page 1.

Part No.	Description	List Price
2160	Speaker housing	$0.75
2150	Speaker bezel (chrome)	.40
2159	Grill cloth	.15
1644-A	Grill screen	.10
2152	Speaker cable complete with pin prongs	.25
2194	Small pin cable prongs (less fibre caps)	.04
2195	Large pin cable prongs (less fibre caps)	.06
2193	3 1/2 in. speaker mounting bolt—7/16—14 Thread	.10
	7/16 hex. steel nuts (per doz.)	.25
	3/8 in. iron washers (per doz.)	.25
	7/16 in. lockwashers (per doz.)	.35
2154	Spacer block	.10
1979	8 ft. speaker cable complete	1.00
1717	Overhead speaker only, less all accessories	4.50
2405	Cone and voice coil (replaced at factory)	2.25
2406	Field coil	2.80
2094	Output transformer	1.25
	Speaker replacement	2.75

NOTE: Due to the fact that speaker cones cannot be replaced by the service man in the field, it will be necessary to return all speakers to us for service. A charge will be made for parts and service according to the above rate (1799-1800).

Motorola Models No. 61 and No. 88

Part No.	Description	List Price
501	No. 61 Control Head Complete	$6.00
502	No. 88 Control Head Complete	6.00
503	Flexible Shaft Complete	2.50
504	Black or Walnut Knobs	.10
505	Keys (D-700) Each	.30
506	Dial Lights	.15
507	No. 61 and No. 88 Lock & Switch (No. 2398)	.90
508	Dial Light Sockets	.15
509	No. 61 Black Clamp	.20
510	No. 88 Walnut Clamp	.20
511	No. 61 and No. 88 Volume Control (No. 290-B)	1.00
512	Celluloid Dial	.25
513	Terminal Strip Complete	.30
514	Type 800 Variable Condenser	4.00
515	Antenna Coil	1.00
516	R. F. Coil	1.25
517	Oscillator Coil	1.25
518	First I. F. Transformer	2.00
519	Diode Feeder	2.00
520	8 Mfd. 200 Volt Condenser (No. 8200W)	.80
521	8 Mfd. 200 Volt Condenser (No. 8200L)	.80
522	Filter Choke Coil (No. 1663-C)	1.00
523	9 Way Plug	.50
524	9 Way Socket	.50
525	"A" Filament Choke Coils	.30

Part No.	Description	List Price
532	No. 88 Complete Cable Assembly	5.50
533	No. 61 Complete Cable Assembly	5.10
534	Dual .1 Mfd. 300 V. Condenser (No. 1651)	.50
535	Pinion Mounting Flange	.50
536	Power Transformer Assembly Complete	4.00
537	S-102 Elkonode (No. 88)	5.00
538	S-103 Elkonode (No. 61)	5.00
539	No. 88 Antenna Cable Only	.90
540	No. 61 Antenna Cable Only	.80
541	No. 88 Antenna Cable Assembly Complete	1.60
542	1 Way Antenna Plug	.10
543	Center Tap Audio Choke (No. 1759-C)	2.00
544	1/4 Mfd. Bypass Condenser 300 V. (A19H)	.90
545	.1 Mfd. 200 V. Tubular Condenser	.30
546	.02 Mfd. 300 Volt Condenser	.25
547	.05 Mfd. 200 Volt Condenser	.25
548	.1 Mfd. ByPass Condenser in Can	.75
549	.5 Mfd. 200 V. Condenser (No. 1379)	.50
550	.002 Mfd. Bakelite Condenser	.25
551	.0005 Mfd. Bakelite Condenser	.20
552	160 Tooth Gear	.50
553	3 Way Terminal Mounting Strip	.10
554	4 Terminal Mounting Strips	.10
555	Service Cable	2.00
556	Resistors — State Value	.15
557	"A" Battery Lead Coated Lugs	.10
558	2 Way Receptacle	.10

Motorola Models No. 61 and No. 88 (Cont.)

Part No.	Description	List Price
526	No. 88 "A" Battery Cable	1.25
527	No. 61 "A" Battery Cable	1.10
528	No. 88 Speaker Cable	1.00
529	No. 61 Speaker Cable	.90
530	No. 88 Control Cable	1.50
531	No. 61 Control Cable	1.25
559	.05 Mfd. 1600 V. Buffer Cond. (No. 1636)	.40
560	Power Transformer Only (No. 1660-C)	3.75
561	No. 237 Special Socket — Inverted	.40
562	Tube Sockets	.15
563	BR-Tube Shield	.50
564	"BR" Rectifier Tube	2.75

No. 61 and No. 88 Speakers—Output Transformers—Speaker Cones

Model No. 88

Part No.	Description	List Price
565-A	M-227-I Output Transformer for above	$10.50
566	245-AS Wright DeCoster (Round can)	2.10
566-A	9-K-S Output Transformer for above	10.50
567	245-ASV Wright DeCoster (Temple can)	2.10
567-A	9-K-S Output Transformer for above	10.50
		2.10

Model No. 61

Part No.	Description	List Price
568	255-SAL Wright DeCoster Speaker	6.50
568-A	8-JL-2 Output Transformer for above	2.10
569	Cone and Voice Coil Assembly for 2227 Speaker	2.25
570	Cone and Voice Coil Assembly for 245AS Speaker	3.25
571	Cone and Voice Coil Assembly for 245ASV Speaker	3.25
572	Cone and Voice Coil Assembly for 255SAL Speaker	2.25
	Speaker Replacement Price List	3.25

Special for Model 62

Part No.	Description	List Price
1670	Model 62 iron core antenna coil	$2.00
1457-M	Special Front Cover	1.25
1459-M	Special back cover assembly cpt.	3.75
1533	1 way antenna receptacle	.10
1493-C	No. 15 wire hash choke	.30

Eliminode
Models 60, 80 and Golden Voice

Part No.	Description	List Price
2060	Eliminode, complete in housing	$10.00
2061	Eliminode cover only with wiper	.50
2062	Electrostatic shield	.10
2065	Eliminode sliding plate	.10
2050	Eliminode travel screw	.10
2118	Speaker field choke	.20
2121	Pancake choke, pie-wound, 3 layer	.25
2122	Choke complete in fibre cup, pie-wound, 3 layer	.25
2119	Speaker voice coil choke	.20
2120	"A" lead filter choke	.25
2037	5 way male plug	.20
2036	2 way male plug	.10
2028	4 way receptacle	.30
2341	.0001 mfd. trimmer condenser	.15
2243	.0003 mfd. trimmer condenser	.20
2242	Padder condenser	.50
2299	.5 mfd. 120 V. condenser	.40
2416	30 ampere fuse (3-AG)	.05
2176	51 in. antenna loom, complete with plug	.75
2176A	44 in. antenna loom, complete with plug	1.00
2178	Male section "A" cable	.30
2179	"A" cable—battery end—comp. with fuse	.25
2181	Female junction box only	.10
2180	Junction box mounting strap	.05
2041	1 way antenna receptacle	.10
2042	Antenna lead plug and ferrule only	.20
2055	Elim. screw tension washer	.05

Motorola Model 75

Control Unit

Part No.	Description	List Price
1766	Model 75 control hd. cpt. less shafts	$4.25
1761	Pair flexible shafts cpt. (30 in.)	2.00
1473-4	Vol. control shaft cpt.	1.00
1473-5	Tuning control shaft cpt.	1.00
1003	Tone control knob (K-50)	.10
1761	Pair flexible shafts cpt. (30 ins. long)	2.00
1761-A	Pair flexible shafts cpt. (24 ins. long)	2.00
1761-B	Pair flexible shafts cpt. (18 ins. long)	2.00
1761-C	Pair flexible shafts cpt. (36 ins. long)	2.00
1764	Tuning knob (Ivory finish)	.20
1765	Key knob (Vol. control) (Ivory finish)	.20
1006	Keys (Per pair)	.25
1007	Dial lite No. 50	.15
1008	Dial crystal	.15
1756	Mounting bracket	.15
1565	Dial plate only (Model 75)	.15
1013-A	Bezel ring and cork gasket	.10
1763	Dial light assembly cpt. (less bulb)	.30
1016	Dial pointers (K-9)	.05
1015	Horseshoe washers (per dozen)	.25
1012	Die cast gear for var. condenser	.25
1466-A	Volume control (Model 75)	1.00
1767	Tone control assembly cpt.	.25
1768	Dial plate and pointer assembly cpt.	.35
1758	Idler gear and shaft	.15
1759	Clip fasteners for T.C. and D.L. wires (per dozen)	.15
1326	Bushings for end of flexible shafts	.30
1422	Volume control shaft fitting	.15
1420	Drive shaft pinion fitting	.15
1760	Pinion fitting for key	.15
1762	Flexible shafts any length (per ft. each shaft)	.40
1772	Steel Gears	.05
1773	Tin sleeves for vol. control shaft	.05
1774	1/4 x 5/8 in. fill. head screw for mtg. control	.05

"B" Power Output

Part No.	Description	List Price
1818	Power transformer (2839-B)	$2.25
1819	Power transformer (3030)	2.25
1820	Filter choke (2543-F)	.70
1821	Filter choke (3050)	.70
	6 and 6 mfd. at 350 volt, 3 lead	1.60
1465	Electrolytic condenser	
1466	Electrolytic condenser 6/4/5 mfd at 300/300/12 1/2 volts. New	1.60
1363	Transformer can	.40
1357	Elkonode socket case	.30
1358	Top cover	.10
1359	Bottom cover	.10
1350	Elkonode contact washer	.05
01457	Aluminum tube shield	.15
01109	Tube shield base	.05
1822	50 ohm 1/2 watt resistors	.15
1787	Lattice wound hash choke assembly (77-B)	.25
1825	Hash choke (4506)	.30
1072	Hash choke (4402)	.30
1490	13 turns No. 16 wire choke	.20
1493	30 turns No. 18 wire choke	.20
1516	.02 mfd 400 Volt condenser	.20
1405	.5 mfd 50 Volt condenser	.35
1413-B	.01 mfd 1600 Volt condenser	.25
1419-B	.02 mfd 1000 Volt condenser	.25
1548	.5 mfd 25 Volt condenser	.25
1784	Mallory elkonode (53T.)	4.50
1785	Radiart Vibrator (5815-B replaces all models)	4.50
1786	Spec. elkonode for 12 volt operation (G-53T.)	5.50

Outer Housing, Cables and Eliminode

Part No.	Description	List Price
1365-C	(Model 75 outer can cpt. with Eliminode system and cables, less covers)	$9.00
1365-M	Same except for 79 Model	10.00
1367	Back cover	1.00
1366	Front cover only	1.25
1366-C	Front cover cpt. with speaker Grill, and spkr. plug	6.00
1366-M	Same except for 79 Model	6.25
1824	(Eliminode travel section cpt. with choke and bracket, ready to mount)	1.50
1349	Terminal strip	.20
1109	1 way receptacle	.10
1351	4 way socket	.20
1326	Bushing for ant. and M/N cables	.30
1341	"A" battery cable (36 ins. long)	.25
1343	"A" battery cable (26 ins. long)	.20
1545	Antenna lead in and bushing cpt.	.40
1346	Motor noise lead in and bushing cpt.	.40
1344	Shielded loom for ant. junction box	.15

Chassis

Part No.	Description	List Price
1467	3 gang variable condenser	$2.50
1811	1 way antenna plug (91-P)	.10
1434	4 way male plug	.20
1441	2 way speaker receptacle (1 large and 1 small pin)	.10
1776	Sockets (state type)	.10
1520	Variable tension spring	.05
1362	Tube shield with vol. cont. bracket	.25
1361	Dual tube shield (Fin. type)	.25
1439	1000 mmf. padder condenser	.50
1492	Antenna coil cpt. in can	.60
1483-A	R.F. coil cpt. in can (with plate choke)	.90
1812	Oscillator coil cpt. in can	.90
1587	New style diode coil cpt. in can	1.30
1813	I.F. Coil cpt. in can (K-685)	1.30
1814	Diode coil cpt. in can (K-690)	1.30
1666	Iron core antenna coil cpt.	2.00
1815	Bias cell	.20
1801	Mt. cup for bias cell	.15
1817	.0002 mfd. mica condenser	.15
1040	.0003 mfd. mica condenser	.15
1041	.0005 mfd. mica condenser	.15
1038	.001 mfd. mica condenser	.15
1400	.01 mfd. 100 Volt condenser	.12
1400 A	.01 mfd. 100 Volt condenser	.12
1403	.03 mfd. 120 Volt condenser	.15
1027	.25 mfd. 300 Volt condenser (K-102)	.20
1816	.004 mfd. 500 Volt condenser (K-142)	.15
1514	.1 mfd. 200 Volt condenser	.15
1515	.007 mfd. 500 Volt condenser	.20
1518	.01 mfd. 400 Volt condenser	.15
1506	.01 mfd. 400 Volt condenser	.15
1513	.05 mfd. 25 Volt condenser	.35
1575	.05 mfd. 120 Volt condenser	.20
1777	Resistors (state value)	.15
1790	Junction box assembly complete	.50
1545	Antenna lead in (new style)	.40
1545-A	Motor Noise lead in (new style)	.40
1355	Motor noise ant. receptacle (large prong)	.10
1333	Antenna receptacle (small prong)	.10
1300	Small pin cable prong	.08
1301	Large pin cable prong	.08
1374	Small fibre extruded washers (per dozen)	.30
1390	Long condenser plates	.05
1391	Round condenser plates	.05
1368	Insulator for round plates (per dozen)	.30
1476	Insulator for long plate (per dozen)	.30
1592	Extruded insulator for long plate	.03
1440	1/2 in x 1/2 in. wood dowel (per dozen)	.30
1480	1/2 in. x 1 1/2 in. wood dowel (per dozen)	.30
1369	Small hash choke (pie wound)	.15
1469	Medium hash choke (pie wound)	.20
1040	.003 mfd. mica condenser	.15
1041	.0005 mfd. mica condenser	.15
1408	.5 mfd. 25 V. condenser	.30
1548	.5 mfd. 25 V. condenser	.25
1493-C	Hash choke (No. 15 wire)	.30
1407	Tone control choke and bracket	.20
1497-D	Hash choke	.20
1488	Hash choke	.20
1351	Steel gear for elim adjust.	.15
1337	1/4 in. eliminode travel screw	.10
1305	Ground clamp	.10
1825	Green plug button	.05
1794	Shakeproof lockwashers (4018-32)	.05
1795	2 1/4 in. steel washers (K-225)	.05
1796	8 x 1/2 in oval hd. self tapping screws (per 100)	1.00
1826	Set mtg. studs (K-5516)	.05

Speaker

Part No.	Description	List Price
1560	6 in. Dynamic speaker (6531-A-K-6A)	$4.00
1827	Output transformer for same (Z-1195)	1.25
1566	6 in. Dynamic speaker (6732-A-P6-R-7018)	4.00
1828	Output transformer for same (6732-A)	1.25
1829	Speaker cone and voice coil (replaced at factory)	2.25
1830	Speaker field coil (replaced at factory)	2.00
1443	2 way plug and cap	.10
1561	Grill cloth only	.15
1527	Wire screen for grill	.10
1562	Paper gasket	.05
	Speaker replacement	2.75

NOTE: Due to the fact that speaker cones cannot be replaced by the service man in the field, it will be necessary to return all speakers to us for service. A charge will be made for parts and service according to the above rate (1829-1830).

MODELS 77, 77-A, 77-A (B Series) 79, 80, M-99, 100, 110

GALVIN MFG. CO.

Parts Lists

Motorola Model No. 77

PRICES ARE SUBJECT TO CHANGE WITHOUT NOTICE

No. 77—Control Unit

Part No.	Description	List Price
701	Control Head Complete	$6.00
702	Flexible Shaft Complete with Worm Gear	3.50
703	Spacer Block	.20
603	Clutch Spring	.10
704	Filler Rings	.20
705	Hexagon Nut	.15
706	Convex Glass Crystal	.25
707	Chrome Plated Bezel	.25
708	Control Head Mounting Strap	.25
709	Dial Plate	.25
710	Special Black Tuning Knob	.25
711	Cond. Gear, State Fine or Coarse Tooth	.50
712	Keys (K-01) Each	.20
713	[illegible]	[illegible]
714	[illegible]	[illegible]
715	[illegible]	[illegible]
716	[illegible]	[illegible]

No. 77—Chassis

Part No.	Description	List Price
717	[illegible]	[illegible]
718	[illegible]	[illegible]
719	[illegible]	[illegible]
720	[illegible]	[illegible]
721	[illegible]	[illegible]
722	[illegible]	[illegible]
723	[illegible]	[illegible]
724	[illegible]	[illegible]
725	[illegible]	[illegible]
726	[illegible]	[illegible]
727	[illegible]	[illegible]
728	[illegible]	[illegible]
729	[illegible]	[illegible]
730	[illegible]	[illegible]
731	[illegible]	[illegible]
732	[illegible]	[illegible]

No. 77—"B" Power Unit

Part No.	Description	List Price
733	"B" Power Unit Complete	12.00
734	Power Transformer (No. 2152)	2.75
735	Type 30 Elkonode	5.75
736	Filter Choke (No. 2119)	1.00
737	(No. 8300-B) 8 Mfd. 500 V. Electrolytic Condenser	.90
738	(No. 8300-A) 8 Mfd. 300 V. Electrolytic Condenser	.90
739	(No. 6530)—65 Mfd. 30 V. Electrolytic Condenser	.90
740	Lattice Wound—R. F. Chokes Complete	.30
741	.01 Mfd. 1600 V. Buffer Cond. in Can (1783)	.45
742	.0025 Mfd. Mica Condenser	.20
743	.001 Type MJ Mica Condenser	.15
744	Elkonode Socket with Spacer Pin	.30
745	2 Way Power Unit Plugs	.10
746	2 Way Receptacle (HBJ)	.15
747	3 Way Polarity Receptacle	.25
748	Sponge Rubber Elkonode Cushion	.20

No. 77—Outer Housing

Part No.	Description	List Price
749	7 Way Receptacle	.50
750	3 Contact Terminal Strip	.20
751	20 Turns No. 12 Wire, Eliminode Choke (Used in "A" Batt. Spkr. Field, Voice Coil and Power Unit Circuit	.20
752	26 Turns No. 16 Wire Hash Choke	.20
753	Volume Control Bracket (23-C)	.10
754	Antenna Receptacle Shield Assembly	.35
755	Red Dot Mica Condensers	.15
756	.01 Mfd. 300 V. Tubular Condensers	.15

No. 77—Cables and Filters

Part No.	Description	List Price
757	"A" Battery Cable	.20
758	2 Wire Speaker Cable	.20
759	Shielded Antenna Loom	.35
760	5/16-18x3" Set Mtg. Bolts	.05

No. 77—Speakers

Part No.	Description	List Price
761	Speaker Housing—6" Size (No. 150H)	.75
762	Short Section of Adjustable Speaker Stud	.20
763	Long Section of Adjustable Speaker Stud	.30
764	Speaker Stud Thumb Screw	.10
765	Complete Stud Assembly	.60
766	Metal Grill for 6" Speaker (No. 150DM)	.40
767	Complete Speaker and Housing for Model 77 with adjustable Mtg. Bolts and Cable	8.00
768	Magnavox Dynamic Speaker No. 150-D-77	6.25
769	Output Transformer for Same (No. 2120)	1.25
770	Cone and Voice Coil Assembly	2.00
	Speaker Replacement Charge	4.00

Motorola Models No. 77-A and 77-A "B" Series

No. 77A and 77A-"B"—Control Unit

Part No.	Description	List Price
801	Control Head Complete	$6.00
802	Flexible Shaft Complete with Worm Gear	3.50
803	Spacer Block	.20
605	Clutch Spring	.10
804	Crescent Filler Ring	.20
805	Hexagon Nut (Eccentric)	.15
806	Convex Glass Crystal	.25
807	Chrome Plated Bezel	.25
808	Mounting Strap	.25
809	Dial Plate	.25
810	Special Black Knob	.25
811	Cond. Gear (Specify Coarse or Fine Pitch)	.50
812	Keys (K-01) Each	.20
813	Dial Lite (No. 50)	.15
814	Drive Pinion	.20
815	Volume Control Center Tap (6641-C)	1.00
816	Dial Light Socket	.15

No. 77A and No. 77A-"B"—Chassis

Part No.	Description	List Price
817	3 Gang Variable Condenser (77-SM)	2.00
818	Variable Condenser Mounting Bracket	.10
819	Variable Condenser Mounting Screws	.05
820	Brass Wipers Doz.	.25
821	Variable Condenser Tension Screws	.10
846	"B" Power Unit Complete	12.00
847	2 Way Plugs	.10
848	5 Prong Socket with Spacer Pin	.15
849	Electrolytic Condenser (No. 8420)	1.20
850	.5 Mfd. 160 Volt Condenser	.30
851	R. F. Choke on Mounting Strip	.30
852	T-60 or 70-B Elkonode	5.50
853	Power Transformer (No 2270)	2.25
854	Filter Choke Coil (No. 2060-F)	1.00
855	.01—1600 V. Condenser for T-60 Elkonode	.40
856	Sponge Rubber Elkonode Cushion Rings	.10
857	Special Spray Shield	.50

No. 77A and No. 77A-"B"—Outer Housing

Part No.	Description	List Price
858	Front Cover	.50
859	Back Cover	.30
860	7 Way Receptacle	.20
861	Antenna Receptacle Assembly	.35
862	.2 Mfd. 200 V. Tubular Condenser	.20
863	.05 Mfd. 300 V. Tubular Condenser	.15
864	Plug Buttons	.05
865	20 Turns No. 12 Wire, Eliminode Choke. (Used in "A" Batt. Spkr. Field, Voice Coil and Power Unit Circuit)	.20
866	26 Turns No. 16 Wire Hash Choke	.20

Part No.	Description	List Price
822	20M-20M Ohm D-L Candohm Resistor	.40
823	Tube Sockets — Special Type	.15
824	Antenna Coil Complete in Can	.50
825	R. F. Coil Complete in Can	.45
826	Oscillator Coil	.60
827	1st I. F. Transformer Complete	1.25
828	2nd I. F. Transf. Complete (77-A Only)	1.25
829	Diode Feeder Complete	1.25
830	.0005 Mfd. Mica Condenser (White Dot)	.15
831	.0005 Mfd. Mica Condenser (Midget)	.15
832	.25 Mfd. 300 V. Condenser in Can (No. 2047 or No. 1772)	.50
833	.2 Mfd. 500 V. Tubular Condenser	.25
834	.25 Mfd. 160 V. Tubular Condenser	.15
835	.01 Mfd. 300 V. Tubular Condenser	.15
836	.05 Mfd. 200 V. Tubular Condenser	.15
837	[illegible]	[illegible]
838	[illegible]	[illegible]
839	[illegible]	[illegible]
840	[illegible]	[illegible]
841	[illegible]	[illegible]
842	[illegible]	[illegible]
843	[illegible]	[illegible]
844	[illegible]	[illegible]
845	[illegible]	[illegible]
867	[illegible]	[illegible]
868	[illegible]	[illegible]
869	[illegible]	[illegible]
870	[illegible]	[illegible]
871	[illegible]	[illegible]
872	[illegible]	[illegible]
873	[illegible]	[illegible]
874	[illegible]	[illegible]
875	[illegible]	[illegible]
876	[illegible]	[illegible]
877	[illegible]	[illegible]
878	[illegible]	[illegible]

No. 77A and 77A-"B"—Speakers

Part No.	Description	List Price
880	[illegible]	[illegible]
881	[illegible]	[illegible]
882	[illegible]	[illegible]
883	[illegible]	[illegible]
884	[illegible]	[illegible]
885	Comp. Speaker and Assembly for 77-A and B in housing with Mtg Bolts, and Cables	10.75
886	F-6 Rola Speaker and Output Trans.	8.50
887	Output Transformer Only	1.65
888	Cone and Voice Coil Assembly for Same	2.25
	Speaker Replacement Charge	4.00

Special for Model 79

Part No.	Description	List Price
1666	Iron core antenna coil	$2.00
1365-M	Special outer can cpt.	10.00
1366-M	Special front cover with speaker	6.25
1566-TC	Special blank front cover with tone cont.	2.50
1335	1 way antenna receptacle	.10
M-44	Low loss lead-in	1.25
1654	Dual generator condenser	.40
1493-C	No. 15 wire hash choke	.50

Model "80"

Chassis

Part No.	Description	List Price
	Chassis only less tubes	$37.50
2002	Volume control bracket	.10
2003	Shaft support bracket	.10
2050	3-gang variable condenser	3.50
2051	Variable condenser mounting bracket	.15
2480	Shoulder screws 6813	.05
2053	Variable condenser adjustment cam	.05
2401	Variable condenser drive gear (K61A)	.25
2054	Variable condenser tension spring	.10
2168	Volume control	1.00
2023	Volume control funnel	.05
2071	Antenna coil (complete in can)	1.00
2073	R. F. coil (complete in can) plate choke	1.00
2075	Oscillator coil (complete in can)	1.00
2077-A	I. F. coil (complete in can)	1.25
2079	Diode coil (complete in can)	1.00
2407	Metal tube sockets (state type No.)	.15
2408	No. 6N6 socket (special) 8-7 prong	.15
2034	2-way receptacle	.15
2035	5-way receptacle	.25
2038	Eliminode and chassis wiper	.20
1937	D/L mounting strip	.30
2409	Grid caps for metal tubes (per doz.)	.35
2410	.00005 mfd. type "U" condenser	.15
1039	.0001 mfd. type M. T. condenser	.15
1040	.0003 mfd. type M. T. condenser	.15
1041	.0005 mfd. type M. T. condenser	.15
1400	.01 mfd. 100 V. T. T. condenser	.12
2251	.01 mfd. 300 V. T. T. condenser	.15
2252	.05 mfd. 400 V. T. T. condenser	.20
2256	.05 mfd. 25 V. condenser	.15
2270	.01 mfd. 100 V. and 500M ohm resistor	.30
2296	.1 mfd. 200 V. condenser	.15
2257	.1 mfd. 25 V. condenser with mounting strap	.20
2264	.25 mfd. 300 V. condenser	.30
1405	.03 mfd. 100 V. condenser	.15
1777	Resistors (state value)	.15
2275	.005 mfd. 100 V. condenser	.12
2095	Input choke	1.25
2096	Output transformer	1.25
2187	Tone control—110,000 ohm	.50
2170	Tone control knob	.10

Outer Housing

Part No.	Description	List Price
2008	Front cover, less ornaments	$1.75
2009	Rear cover	1.50

"B" Power

Part No.	Description	List Price
2097	Power transformer	$2.50
2030	Vibrator hold down clamp	.10
2020	Transformer can	.35
2021	Transformer can base	.10
2098	Filter choke (35 mills)	.70
2115	5 layer hash choke	.30
2116	5 layer hash choke	.30
1988	Power choke complete in shield	.35
2404	Elkonode	4.50
2185	Electrolytic condenser	2.00
2239	.5 mfd. 120 V. condenser	.40
2268	.005 mfd. 1600 V. condenser	.30
2411	.0008 mfd. 1000 V. M. W. condenser	.15
2093	Vibrator socket 4 prong spec.	.10
1473	Grill screen	.30
2175	Speaker cable with pin prongs	.35
1300	Small pin prongs	.08
1301	Large pin prongs	.08

Model 80 (Cont.)

Part No.	Description	List Price
2198	Medallion plates (each)	.30
2199	Name plate	.50
1792	Black plug buttons (large)	.05
2412	Black plug buttons (medium)	.03
1500	Black plug buttons (small)	.03
2018	Jiffy mounting bracket	.40
2019	Set mounting contact wiper	.10
2017	Set mounting bolts	.05
2172	5/16 x 5/8 in. H. H. P. K. screws	.05
2171	5/16-18 hex. steel nuts self-locking	.05

Speaker

Part No.	Description	List Price
	Speaker only—see page L.	
1375	Speaker housing	$0.90
1376	Speaker bezel	.40
2169	Grill cloth	.15
2155	Short speaker stud	.20
1118	K-305 Long speaker stud	.30
1797	K-250 2½ in. steel washer	.05
	3/8 x 16 hex. steel nuts (per doz.)	.25
1809	3/8 x 16 x 3/4 in. thumb screw	.05
	3/8 in. iron washer (per doz.)	.25
	3/8 in. lockwasher (per doz.)	.25
2413	Cone and voice coil	2.75
2414	Field coil	2.00
2096	Output transformer	1.25
	Speaker replacement	4.00

NOTE: Due to the fact that speaker cones cannot be replaced by the service man in the field, it will be necessary to return all speakers to us for service. A charge will be made for parts and service according to the above rate (1799-1800).

M-99

Airplane Type Control Head

Part No.	Description	List Price
2205	Pointer disc assembly	$0.25
2206	Dial plate (background)	.10
2207	Etched glass dial face	.25
2208	Bezel ring	.15
2415	K-13 stop set screws for knobs (per doz.)	.25
1008	Dial crystal	.15
2144	Felt washer for bezel	.05
1807	Dial light assembly less bulb	.30
1007	No. 50 6/8 volt dial light	.15
	3 ft. No. 20—1/64 black wire and plug	.10
2225	Tuning shaft, 25 15/16 in.	1.00
2226	Volume control shaft, 26 7/16 in.	1.00
1326	Flexible shaft bushings	.50
1759	K-218 Wire clips (per doz.)	.15

Motorola Model 100

Control Unit

Part No.	Description	List Price
1750	Model 100—Control head cpt. less shafts	$5.00
1761	Pair flexible shaft cpt. (30 ins. long)	2.00
1761-A	Pair flexible shafts cpt. (24 ins. long)	2.00
1761-B	Pair flexible shafts cpt. (18 ins. long)	2.00
1761-C	Pair flexible shafts cpt. (36 ins. long)	2.00
1473-4	Vol. control shaft cpt.	1.00
1473-5	Tuning shaft cpt.	1.00
1751	Tone control knob (K-37)	.10
1752	Tone control resistance unit (K-36)	.25
1753	Tone control assembly cpt. less resistor	.25
1754	Tuning knob (chrome plated)	.20
1755	Key knob (Vol. control) (chrome plated)	.20
1006	Keys per pair	.25
1007	Dial lite No. 50	.15
1008	Dial crystal	.15
1756	Mounting bracket for steering post	.15
1535	Glass Dial face	.30
1530	Black background plate	.10
1531	Retainer ring for dial face	.05
1532	Pointer disc	.05
1015-A	Bezel ring and cork gasket	.15
1763	Dial light assembly cpt.	.30
1015	Horseshoe washer (per dozen)	.25
1012	Die cast gear for variable	.35
1757	Pointer disc. and shaft assembly cpt.	.15
1758	Idler gear and shaft	.15
1399	Volume control	1.00
1759	Clip fasteners for T.C. and D.L. wires (per dozen)	.15
1326	Bushing for end of flexible shafts	.30
1422	Volume control shaft fitting	.15
1420	Drive shaft Pinion fitting	.15
1760	Pinion fitting for key	.15
1762	Flexible shafts any length (per ft. each shaft)	.40
1772	Steel gears	.05
1773	Tin sleeves for vol. control shaft	.05
1774	1/4 x 3/8 in. fill head screw for mtg. control	.05

Chassis

Part No.	Description	List Price
1303	3 gang variable condenser	$2.50
1311	Tube shield (finished type)	.30
1520	Variable tension spring	.05
1312	Variable condenser shield	.25
1331	4 way receptacle	.15
1548	1 way ant. receptacle	.10
1776	Sockets (state type)	.10
1439	1000 mmf. padder condenser	.30
1482	Antenna coil cpt. in can (76 tube)	.75
1581	New type antenna coil cpt. in can (37 tube)	.75
1483	R.F. coil cpt. in can and plate choke	.75
1583	New style R.F. coil cpt. in can and plate choke	.75
1485	Oscillator coil cpt. in can	.90
1850	I.F. Coil cpt. in can (K-695)	1.30
1855	Diode coil cpt. in can (K-690)	1.30
1585	New Style I.F. coil cpt. in can	1.30
1587	New style diode coil cpt. in can	1.30
1586	New style plate choke only	.20
1779	Output transformer only	1.25
1780	Input audio choke only	1.25
1650	Iron core antenna coil cpt. in can	2.00
10857	Audio and output transformer assembly (76 tube)	2.50
1554	Audio and output transformer assembly (37 tube)	2.50
1040	.003 mfd. mica condenser	.15
1041	.0005 mfd. mica condenser	.15
1042	.0005 mfd. mica condenser (1000 volt—white dot)	.20
1400	.01 mfd. 100 volt condenser	.12
1401	.02 mfd. 200 volt condenser	.25
1402	.25 mfd. 300 volt condenser	.30
1404	.05 mfd. 400 volt condenser	.18
1406	.02 mfd. 400 volt condenser	.15
1407	.01 mfd. 300 volt condenser	.25
1409	.05 mfd. 120 volt condenser	.18
1791	Any length Speaker cable cpt. (staff length) (per foot)	.15
1327	Bushing for ant. and M/N.	.30
1412	.08 mfd. 400 V. condenser and coil	.35
1403	.03 mfd. 25 V. condenser	.12
1408	.5 mfd. 25 V. condenser	.30
1041	.0005 mfd. mica condenser	.15
1497	40 T—No. 18 wire hash choke	.30
1494	50 T—No. 18 wire hash choke	.20
1491	6 T—No. 14 wire hash choke	.30
1792	Black plug buttons	.03
1798	Set mounting studs (K-3536)	.05
1794	Shakeproof lockwashers (4018-32)	.05
1795	2¼ in. steel washers (K-225)	.03
1796	8x¼ in. oval hd. self tapping screws (per 100)	1.00

Speaker

Part No.	Description	List Price
1470	8 in. dynamic speaker (Early Model)	$6.00
1570	8 in. dynamic speaker (Late Model)	6.00
1375	Speaker housing only	.50

Part No.	Description	List Price
1410	.01 mfd. 100 volt & 20 M. ohm condenser and padder	.15
1412	.03 mfd. 400 volt and coil condenser tone control	.35
1568	.002 mfd. 100 volt and 25 M. ohm condenser and padder	.20
1777	Resistors (state value)	.15
1433	500 ohm candohm resistors	.25
1436	50-70 ohm candohm resistors	.25
1438	290 ohm and 200 ohm variable resistor	.40

"B" Power Unit

Part No.	Description	List Price
1781	Power transformer (2988)	$2.50
1782	Filter choke (2543-D)	.70
1384	Electrolytic condenser (8/8/25 mfd. 550/350/25 volt	1.75
1307	Transformer can	.40
1309	Elkonode socket case	.15
1308	Cover for same	.10
1306	Choke and condenser shield can	.25
1330	Blk. contact washer	.05
1783	Perforated tube shield (G-621-U)	.15
1784	Mallory Elkonode (53T)	4.50
1785	Radiart Vibrator (3015-B replaces all models)	4.50
1786	Spec. elkonode for 12 volt operation (G-55 T)	5.50
1405	.5 mfd. 50 v. condenser	.35
1403	.03 mfd. 120 v. condenser	.12
1406	.02 mfd. 400 v. condenser	.20
1413-0	.01 mfd. 1600 v. condenser (oil type)	.50
1567	.01 mfd. 1600 v. condenser (wax type)	.35
1419	.02 mfd. 1000 v. condenser	.25
1572	.02 mfd. 1000 v. condenser	.35
1787	Lattice wound hash choke assembly (77-E)	.25
1588	New style hash choke	.35
1588-C	New style hash choke encl. in shield	.35
1497-C	Hash choke (paper tube)	.30
1788	Hash choke (3 layer pie wound) (K-6810A)	.35

Outer Housing, Cables and Eliminodes

Part No.	Description	List Price
1315-C	Model 100—outer can cpt. with Eliminode system and cables, less covers	$10.00
1315-M	Same except for 110 Model	11.00
1317	Back Cover only	1.00
1316	Front cover only	1.00
1316-C	Front cover cpt. with name plate	1.25
1789	Eliminode travel section cpt. with choke and bracket, ready to mount	1.50
1314	Terminal strip	.20
1330	4 way male plug	.20
1347	1 way ant. plug	.10
1341	"A" battery cable	.25
1343	Antenna lead in and bushing cpt.	.40
1346	Motor noise lead in bushing cpt.	.40
1345	Antenna lead in (new style)	.40
1345-A	Motor noise lead in (new style)	.40
1344	Shielded loom for ant. junction box	.15
1790	Junction box assembly cpt.	.50
1333	Antenna receptacle (small prong)	.10
1335	Motor noise receptacle (large prong)	.10
1300	Small pin cable prong	.08
1301	Large pin cable prong	.08
1374	Small fibre extruded washers (per dozen)	.50
1390	Long condenser plates	.05
1391	Round condenser plates	.05
1308	Insulator for round cond. plates (per doz.)	.30
1309-A	Insulator for 6 long condenser plates, each	.10
1476	Insulator for single long condenser plate (per dozen)	.30
1437	½x7/8 in. wooden dowel (per dozen)	.30
1440	½x3/8 in. wooden dowel (per dozen)	.30
1369	Small hash choke (pie wound)	.15
1351	Steel gear for elim. adjust.	.15
1337	¼ in. eliminode travel screw	.10
1305	Ground clamp	.10
1342	3½ ft. speaker cable cpt. with term. prongs	.35
1302	Motorola name plate	.30
1376	Chrome plated speaker bezel	.40
1472	Wire screen for speaker	.10
1471	Grill cloth for speaker	.05
1117	Short speaker stud (K-302)	.20
1118	Long speaker stud (K-305)	.30
1797	2½ in. steel washers	.05
1798	Speaker cpt. in housing with mtg. studs, etc.	8.60
1799	Speaker cone and voice coil (replaced at the factory)	2.75
1800	Speaker field coil (replaced at the factory)	2.00
1809	3/8-16 x 3/4 Thumb Screw	.05
	Speaker Replacement	4.10

NOTE: Due to the fact that speaker cones cannot be replaced by the service man in the field, it will be necessary to return all speakers to us for service. A charge will be made for parts and service according to the above rate (1799-1800).

Special for Model 110

Part No.	Description	List Price
1690	Iron core antenna coil	$2.00
1315-M	Special outer can complete	11.00
1612-C	Special tone control assembly	.60
1333	1 way antenna receptacle	.10
M-44	Low loss lead-in	1.25
1654	Dual generator condenser	.60
1493-C	No. 15 wire hash choke	.30

Special Accessories for 1935 Ford Models

Part No.	Description	List Price
1542F	8 Ft. Speaker Cable	$1.00
1458-FC	Model F-57 Special Front Cover complete	2.50
1844	Special Ford Ant. Junction Box (All Models)	.40
1646	Overhead Speaker Mounting Bracket only	1.50
1645	Bezel Ring for same	.40
1644	Grill Screen for Ford or Studebaker	.25
M-51	Bezel Ring and screws for Studebaker. Net	.35
1643	Grill Cloth for Ford or Studebaker	.15
1640-F	6" Dynamic Speaker for Overhead Mounting (all models)	4.00
1844-A	Ford Overhead Speaker complete with Bracket, Bezel and Cable, ready to mount	6.50
1366-FC	Model F-75 Special Front Cover complete	2.50
1651-F	Terminal Strip for Front Cover	.30
1647	Tin Shield Can for Front Cover Eliminode	.25
1406	.02 Mfd. 120 Volt Condenser	.12
1400	.01 Mfd. 100 Volt Condenser	.12
1497 D	Hash Choke	.30

©John F. Rider, Publisher

GAMBLE-SKOGMO, INC.

MODEL 5-Y
Schematic, Voltage
Socket, Trimmers, Parts

Dec, 1934

VOLTAGES AT SOCKETS
Input 6.3 Volts—Antenna Disconnected at Connector

Type of Tube	Function	Volts at Heater	Plate to Cathode	Screen to Cathode	Grid to Cathode	Normal Plate M.A.
6D6	R. F.	6.2	154	95	3.0	5.2
6C6	1st Det. & Osc.	6.2	160	97	0	3.0
6D6	I. F.	6.2	154	95	3.0	5.2
75	2nd Det. & 1st A. F.	6.2	110	—	1.	.25
41	Power	6.2	143	146	14.	13.0

Fig. 1—*Schematic Circuit Diagram*

On the Voltage Chart are given the voltages at the sockets with all tubes in and the set in operating condition. The antenna should be disconnected at the bayonet connector.

Fig. 2—*Location of Tubes and Vibrator*

CONDENSERS

Part No.	Code	Capacity	Voltage	Type	Part of
P-81814	C1	250 mmf.	200V.	Tubular	Antenna Coil Assembly
	C2	.50 mf.	200V.	Tubular	
	C4	.10 mf.	140V.	Tubular	
P-82600-D	C10	.25 mf.	140V.	Tubular	Bypass Block
	C14	.05 mf.	300V.	Tubular	
	C15	.10 mf.	200V.	Tubular	
P-81116	C3	.05 mf.	200V.	Tubular	Part of Grid Leak Assembly
P-81815	C5	35 mmf.			
P-81806	C6	70 mmf.			Part of 1st I. F. & Osc. Coil Assembly
	C7	70 mmf.			
P-81806	C8	70 mmf.			Part of 2nd I. F. Coil Assembly
	C9	70 mmf.			
P-81115	C11	.05 mf.	350V.	Tubular	
P-81114	C12	.006 mf.	600V.	Tubular	
P-81814	C13	250 mmf.		Moulded	
P-81132	C16	.10 mf.	300V.	Tubular	In Choke Condenser Unit
	C17	.01 mf.	120V.	Tubular	
	C18	.01 mf.	120V.	Tubular	
P-81120	C19	.05 mf.	1600V.	Tubular	
P-81122	C20	.10 mf.	400V.	Tubular	
P-81121	C21	.50 mf.	140V.	Tubular	
P-81816	C22	.002 mf.		Moulded	
P-82002	C23	4.0 mf.	250V.	Dry Electrolytic	Block
	C24	2.0 mf.	250V.		
	C25	4.0 mf.	25V.		
P-82500	Gang Condenser				

In the first models of this receiver a bypass condenser block (P-82600) containing condensers: C2, C4, C10, C14, C15 and C16 was used. Condenser C16 was removed in the later models and added as a separate tubular condenser (P-81132) while the other condensers remained in the block (P-82600-D).

A second condenser change from the earlier models was in the electrolytic filter block (P-82002). In this block section C24 was changed from an 8 mfd., 250 volt

RESISTORS

Part No.	Code	Resistance	Watt-tage	Type
P-B94331ww	R1	350 Ohm	.5	Flexible Wire Wound
P-B95253	R2	25,000 Ohm	.5	Carbon
P-B95103	R3	10,000 Ohm	.5	Carbon
P-A95105	R4	1 Megohm	.2	Carbon
P-A95105	R5	1 Megohm	.2	Carbon
P-A95504	R6	500,000 Ohm	.2	Carbon
P-A94752	R7	7,500 Ohm	.2	Carbon
P-A95104	R8	100,000 Ohm	.2	Carbon
P- 96037	R9	2 Megohm		Volume Control and Switch
P-A95503	R10	50,000 Ohm	.2	Carbon
P-A95204	R11	200,000 Ohm	.2	Carbon
P-A95504	R12	500,000 Ohm	.2	Carbon
P-B94601ww	R13	800 Ohm	.5	Flexible Wire Wound

MODEL 5-Y
Alignment
Drive Cord Data
Resistance Data

GAMBLE-SKOGMO, INC.

Condenser Alignment

Misalignment or mistracking of condensers generally manifests itself as broad tuning and lack of volume at portions or all of the standard wave band. The receivers are all properly aligned at the factory with precision instruments and realignment should not be attempted unless all other possible causes of the faulty operation have first been investigated and unless the service technician has the proper equipment. A signal generator that will provide accurately calibrated signals over the standard wave band and an output meter are required for indicating the effect of adjustments.

First remove the cover of the box. Leave the antenna and battery cables connected to the chassis.

Disconnect the car antenna and connect antenna cable lead to the lead from the signal generator.

Set the signal generator for 1450 K. C. Turn the rotor to the full open position. The antenna lead from the signal generator adjustment is connected to the antenna lead of the receiver. Adjust the trimmer of the oscillator section of the 3 gang condenser until maximum output is obtained. The oscillator section is the one with the cut plate rotor.

Now set the signal generator for 1400 K. C. and turn the rotor until maximum output is obtained. Adjust the other two trimmers on the gang condenser for maximum output.

To calibrate the receiver, tune in a station of known frequency at about the center of the dial. Remove the escutcheon plate and glass. The pointer is held in position by friction. Grasp the pointer at the center and turn it until it points to the frequency of the station being received.

The use of the cut plate type of condenser eliminates the necessity of a 600 K. C. padder and, therefore, no adjustment at this frequency is required.

Adjusting Antenna Trimmer

After the receiver is installed and the car antenna is connected it will be necessary to adjust the antenna trimmer. Tune in a weak signal between 1300 and 1400 K. C. with the volume control about three-fourths on. Drop the chassis from the cover. The location of the antenna trimmer is shown in Fig. 2. Turn the adjusting screw of this condenser up or down until maximum output is obtained. CAUTION—Do not turn any of the other trimmer adjusting screws for this adjustment.

Removing Chassis From Case

First unsolder the black, brown, yellow, and green speaker leads which connect to the terminal strip adjacent to the vibrator unit. Next, notice the small length of braided shielding which is soldered to the solder lug that is secured to the chassis case between the dial scale and the station selector control shaft. Unsolder this shielding at the lug.

Remove the 4 screws which hold the chassis in the case — 2 are in the side and 2 on the speaker panel of the chassis case. (Do not remove the four speaker mounting screws.)

Remove the two control knobs by pulling them off of the shaft.

Next remove the volume control. To do this first loosen the hexagonal nut on the inside of the case with a flat wrench. Then unscrew and remove the round knurled nut from the front.

The chassis may then be taken out.

Replacing Vibrator Unit

The vibrator unit is plugged in in the same manner as a tube. This unit may, in case of failure, be readily replaced. CAUTION—Polarity, as explained in the label on the unit and in the label on the metal box in the chassis, must be observed when plugging in vibrator unit.

In replacing the vibrator unit be sure to replace the corrugated cardboard pad, which prevents the unit from working its way out of the socket.

When servicing this receiver, a new vibrator unit should be tried out in the same manner as a new set of tubes would be tried out.

One or more vibrator units should be kept on hand for replacement purposes.

Replacing Volume Control

To remove the volume control and the switch, first pull the knob from the volume control shaft. Next loosen the hexagonal nut on the inside of the case with a flat end wrench. Then unscrew and remove the round knurled nut from the front.

The old volume control and switch connections may now be unsoldered and the new unit put in its place and the leads resoldered.

Fasten the volume control to the case in the reverse order in which it was removed.

D. C. Resistance of Windings

Following are the D. C. resistances of the various windings in the chassis. The values given below will vary slightly in different sets.

Part No.	Item	Code	D.C. Resistance in Ohms
P-5280	Antenna Trans. Pri. in Series	T1	17.50
	Antenna Trans. Sec.	T1	5.25
P-5256	R. F. Interstage Trans. Pri.	T2	2.31
	R. F. Interstage Trans. Sec.	T2	
	(Center Tap to Inside)		3.25
	(Center Tap to Outside)		[illegible]
P-5260	1st I. F. Trans. Primary	T3	[illegible]
	1st I. F. Trans. Secondary	T3	[illegible]
	Oscillator Cathode Coil (Total)	T4	4.30
	Oscillator Plate Coil	T4	9.00
P-5250	2nd I. F. Trans. Pri.	T5	[illegible]
	2nd I. F. Trans. Sec.	T5	[illegible]
P-[illegible]	Power Trans. Pri.	T7	0.36
	Power Trans. Sec.	T7	[illegible]
P-5174	"B" R. F. Choke	L1	1.40
P-[illegible]	Power Choke	L2	[illegible]
P-[illegible]	"A" Choke	L3	Small
P-[illegible]	Line Choke	L4	Small
P-[illegible]	Choke Coil	L5	Small
P-2288	Output Trans. Pri.	T6	[illegible]
	Output Trans. Sec. and Voice Coil in Par.		0.80
	Speaker Field		4.00

When ordering parts be sure and give the part number. Also give the complete serial number which includes the Series No.

Part No.	Item
P-[illegible]	6A6 Tube Socket
P-[illegible]	6C6 Tube Socket
P-1775	75 Tube Socket
P-1911	41 Tube Socket
P-5247	Antenna Coil Assembly Less Can
P-4015B	Can for above assembly Part of Gang Condenser Assembly
P-5240	R. F. Interstage Coil Assembly Less Can
P-4040C	Can for above assembly - Part of Chassis Assembly
P-5260	1st I. F. and Oscillator Coils and Can Assembly
P-5250	2nd I. F. Coil and Can Assembly
P-2288	Dynamic Speaker
P-[illegible]	Carboard Baffle for Speaker
P-[illegible]	Vibrator Unit
P-[illegible]	Vibrator Socket
P-[illegible]	Power Transformer
P-[illegible]	R. F. "A" Choke Coil
P-5174	R. F. "B" Choke Coil
P-[illegible]	Power Choke Coil Assembly
P-[illegible]	Filament Choke Coil
P-[illegible]	1 Half Tube Shields with Clamping Ring
P-[illegible]	Grid Leak and Condenser Assembly
P-[illegible]	Knobs
P-[illegible]	Thumb Screws
P-[illegible]	Glass Crystal
P-[illegible]	Gasket for Glass Crystal
P-[illegible]A	Grid Clip only
P-[illegible]	Wide Rubber Bands for Tubes
P-[illegible]	Shielded Antenna Cable
P-[illegible]	"A" Battery Cable
P-[illegible]	Single Lug Terminal Strip
P-[illegible]	Double Insulated Terminal Strip
P-[illegible]	Five Lug Terminal Strip
P-[illegible]	Chassis Terminal Lug
P-[illegible]	Drive Tension Spring
P-[illegible]	Horse-shoe Lock (Washer)
P-[illegible]	Dial Strip
P-[illegible]	Dial Pointer

Replacing Drive Cord

The drive cord in this receiver may be replaced as follows:

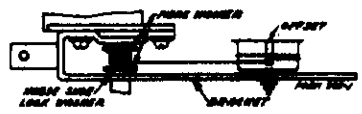

Fig. 3—Cord Drive—Top View

First remove the chassis from the case as explained on page 4.

Some of the first models did not have two fibre "end" washers on the drive shaft to protect the drive cord as shown in Fig. 3. If this is the case, these washers should be put on as follows:

Separate and take off the horse-shoe lock washer which holds the drive shaft in position. This may be done with a fine jawed, long nose plier.

Now pull the drive shaft out just far enough to permit the two fibre washers to be slipped over the end of the shaft.

Then slip the shaft back into place and replace the horse-shoe lock washer.

Knot one end of the new drive cord and with the condenser plates in a completely closed position, slip the drive cord through the small hole "A" in the drive drum — see Fig. 4. The knot will then be on the inside of the drum.

Now wrap the cord around the lower half of the drive drum as indicated and bring it up to the drive shaft. Proceed by wrapping it in a clockwise direction (from

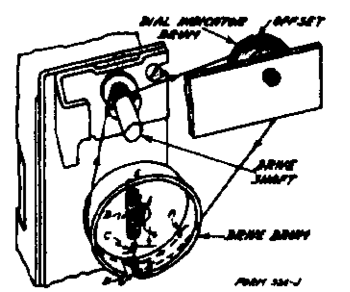

Fig. 4—Cord Drive Replacement

front) around the drive shaft three and one-quarter turns between the two fibre washers, progressing towards the front of the chassis. Be sure that the condenser plates are kept in a closed position and that the cord is held tight.

Set the dial indicator drum so that the offset is at the top or a little to the right of the center — see Fig. 4.

Wrap the cord from the drive shaft once around the offset in the dial indicator drum and then approximately one and one-half turns around the drum itself in a clockwise direction, progressing toward the back.

From the dial indicator drum draw the cord over the lower right hand quarter of drive drum as shown in Fig. 4.

Fig. 5—Drive "Take-up" Spring

Then bring the cord inside of the drum by way of the turned-in portion of the flange at "B".

Tie the drive tension spring "D" to the loose end of the cord at the point "C" just above the top edge of the lip "B" as shown in the illustration. This should be done so that the lower hook of spring "D" at point "C" will be between ½" and ⅝" from top edge of the turned-in portion of the flange "B" in the flange of the drive drum. After the spring is hooked and the drive turned over several times the tension in the cord will cause this distance to become about ¼".

Now, by applying a tension on the drive spring "D", hook the other end of the spring into the small hole "E" near the top of the drive drum. Hook spring from the inside out.

After the cord has been put on it may be necessary to calibrate the receiver as explained in the article on condenser alignment.

All of the earlier models did not have drive shaft "take-up" springs. This spring will prevent any tendency toward change of setting should the receiver be subjected to vibration. To insert these springs and fibre washers on the drive shaft proceed as follows:

Remove the station selector knob by pulling it off of the shaft.

Slip the small fibre washer over the shaft and clip the "take-up" spring to the drive bracket as shown in Fig. 5.

The chassis may now be replaced into the case in the reverse order of the manner in which it was removed.

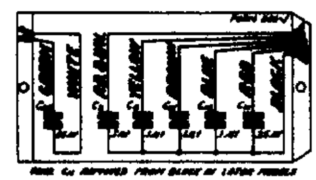

Fig. 6—Condenser Block Internal Wiring

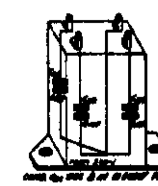

Fig. 7—Electrolytic Block Internal Wiring

©John F. Rider. Publisher

GAMBLE-SKOGMO, INC.

MODEL 06-A
Schematic, Voltag
Socket, Alignment

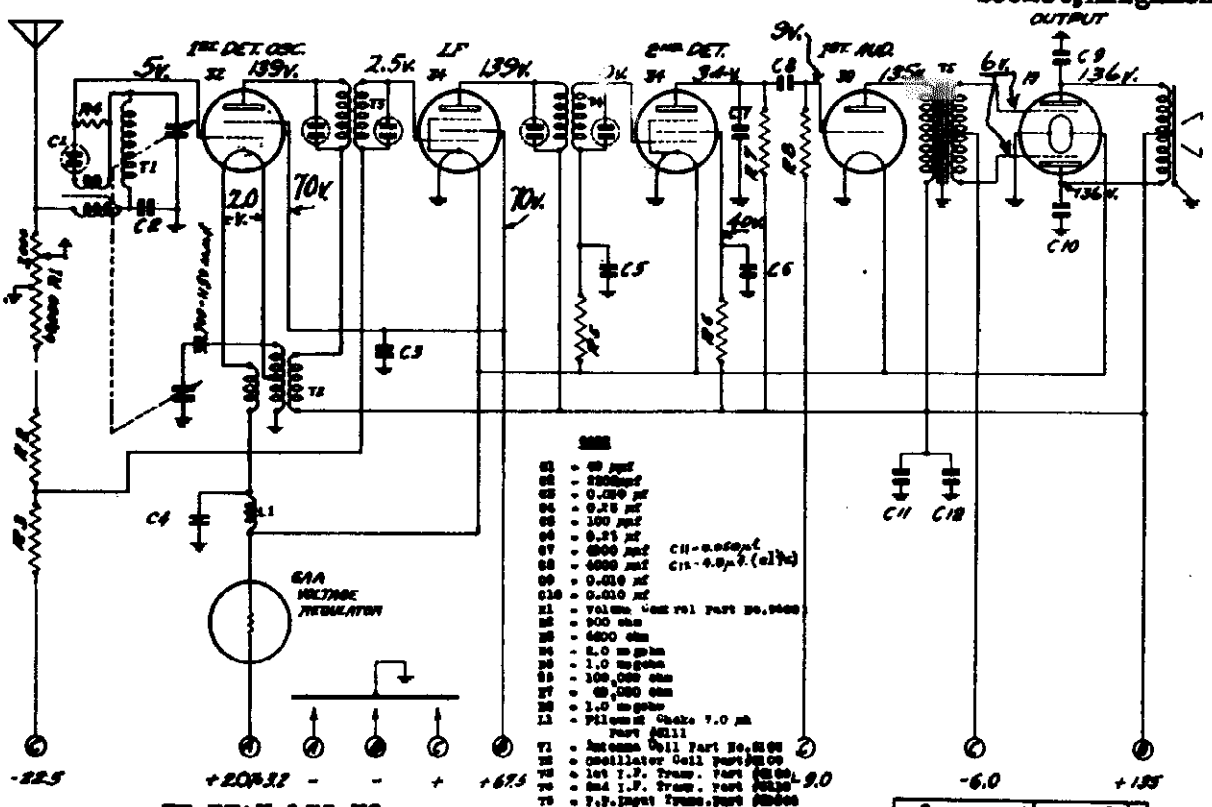

IF PEAK 175 KC.

Optional "C" Battery Connection

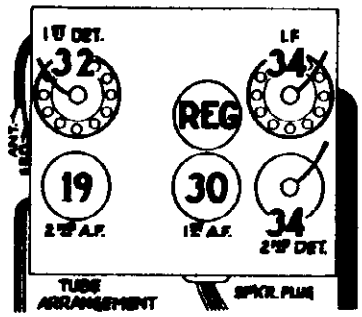

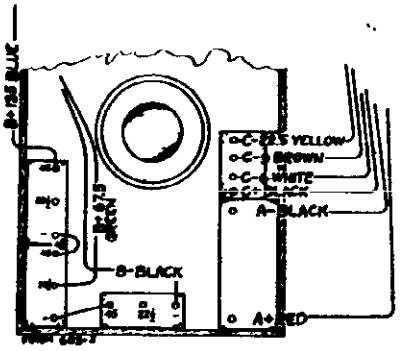

Tube Arrangement and Battery Connections

Condenser Alignment

Misalignment or mistracking of condensers generally manifests itself is broad tuning and lack of volume at portions or all of the broadcast band. The receivers are all properly aligned at the factory with precision instruments and realignment should not be attempted unless all other possible causes of the faulty operation have first been investigated and unless the service technician has the proper equipment. A signal generator that will provide accurately calibrated signals over the broadcast band and an output indicating meter are advisable. The procedure is as follows:

As the I.F. stages are self-tuned, no I.F. aligning at the intermediate frequency of 175 K.C. is required.

First set the signal generator for a signal of exactly 1400 K.C. Connect the antenna lead from the signal generator to the antenna lead of the receiver and the ground lead of the signal generator to the ground of the receiver. Then turn the tuning condenser rotor until the marker is at 1400 K.C. on the dial scale. Adjust the two trimmers on the tuning condenser for maximum output adjusting the oscillator trimmer first.

Next set the signal generator for a signal of 600 K.C. and adjust the oscillator 600 K.C. trimmer. The adjusting screw will be seen at the side of the tuning condenser and is reached from the top of the chassis. A non-metallic screw-driver is necessary for this adjustment. Turn the tuning condenser rotor until maximum output is obtained. Then turn the rotor slowly back and forth over this setting at the same time adjusting the 600 K.C. trimmer screw until the highest output is obtained.

©John F. Rider, Publisher

MODEL 07-A
Schematic, Voltage
Socket, Trimmers, Parts
Alignment

GAMBLE-SKOGMO, INC.

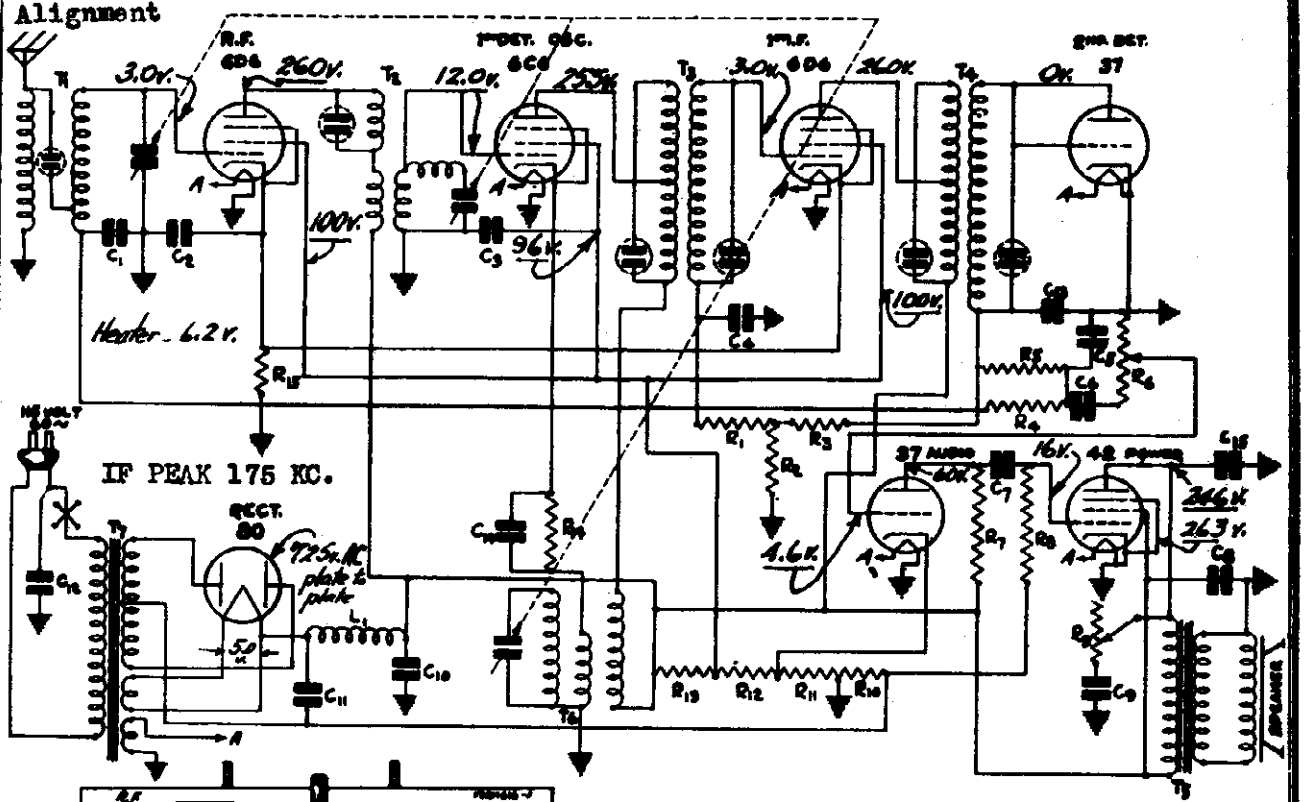

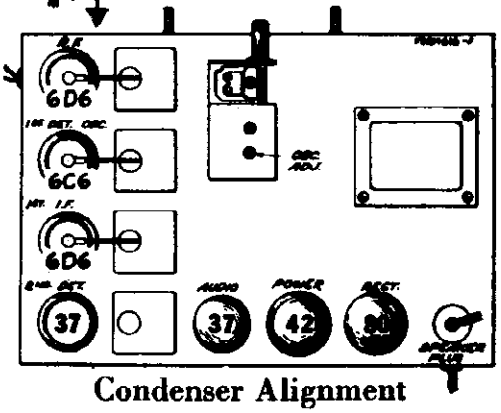

Condenser Alignment

Misalignment or mistracking of condensers generally manifests itself in broad tuning and lack of volume at portions or all of the broadcast band. The receivers are all properly aligned at the factory with precision instruments and realignment should not be attempted unless all other possible causes of the faulty operation have first been investigated and unless the service technician has the proper equipment. A signal generator that will provide accurately calibrated signals over the broadcast band, and an output indicating meter are desirable. The procedure is as follows:

As the I. F. stages are fixed tuned, no I. F. alignment at the intermediate frequency of 175 K. C. is required.

First set the signal generator for a signal of exactly 1400 K. C. Connect the antenna lead from the signal generator to the antenna lead of the receiver, and the ground lead from the signal generator to the ground lead of the receiver. Set the dial pointer on the 1400 K. C. mark on the dial scale and adjust the three trimmer condensers on the gang tuning condenser for maximum output, adjusting the oscillator trimmer first.

RESISTORS

Part No.	Code	Resistance	Type	List Price
P-A95105	R1	1 megohm	Carbon	$0.25
P-A95503	R2	50,000 ohm	Carbon	.25
P-A95154	R3	150,000 ohm	Carbon	.25
P-A95205	R4	2 megohm	Carbon	.25
P-A95104	R5	100,000 ohm	Carbon	.25
*	R6	1 megohm	Vol. Control & Switch	1.25
P-A95204	R7	200,000 ohm	Carbon	.20
P-A95204	R8	200,000 ohm	Carbon	.20
*	R9	150,000 ohm	Tone Control	.80
P-A98002	R10	250 ohm	Armoured Wire Wound	1.00
	R11	800 ohm		
	R12	20,000 ohm		
	R13	18,000 ohm		
P-A98452	R14	4,500 ohm	Carbon	.25
P-A94201	R15	200 ohm	Carbon	.20

"A" preceding the number signifies .2 watt.
"B" preceding the number signifies .5 watt.
"C" preceding the number signifies 1.0 watt.
*When ordering these parts specify shaft length and series number of receiver.

PRICES ARE SUBJECT TO CHANGE WITHOUT NOTICE

CONDENSERS

Part No.	Code	Capacity	Voltage	Type	List Price
P-80862	C1	.050 mfd.	200 V.	Tubular	$0.30
P-80864	C2	.10 mfd.	200 V.	Tubular	.30
P-80888	C3	.25 mfd.	200 V.	Tubular	.40
P-80862	C4	.050 mfd.	200 V.	Tubular	.30
P-80919	C5	250 mmfd.	600 V.	Moulded	.20
P-80862	C6	.050 mfd.	200 V.	Tubular	.30
P-80890	C7	.050 mfd.	400 V.	Tubular	.20
P-80930	C8	.25 mfd.	400 V.	Tubular	.30
P-80890	C9	.050 mfd.	400 V.	Tubular	.20
P-80916	C10	8.0 mfd.	450 V.	Electrolytic	1.50
P-80990	C11	16.0 mfd.	450 V.	Electrolytic	2.00
P-80997	C12	.010 mfd.	600 V.	Metal can	.50
P-80919	C13	250 mmfd.	600 V.	Moulded	.20
P-80914	C14	.002 mfd.	600 V.	Tubular	.20
P-80914	C15	.002 mfd.	600 V.	Tubular	.20
P-80991	Three Gang Condenser				3.85

The tuning condensers are all adjusted at the factory for the correct relative capacity between the oscillator section and the other two sections. As a rule no adjustment other than at 1400 K. C., as mentioned above, is required.

©John F. Rider, Publisher

MODEL 6-U
Schematic, Socket
Voltage, Trimmers

GAMBLE-SKOGMO, INC.

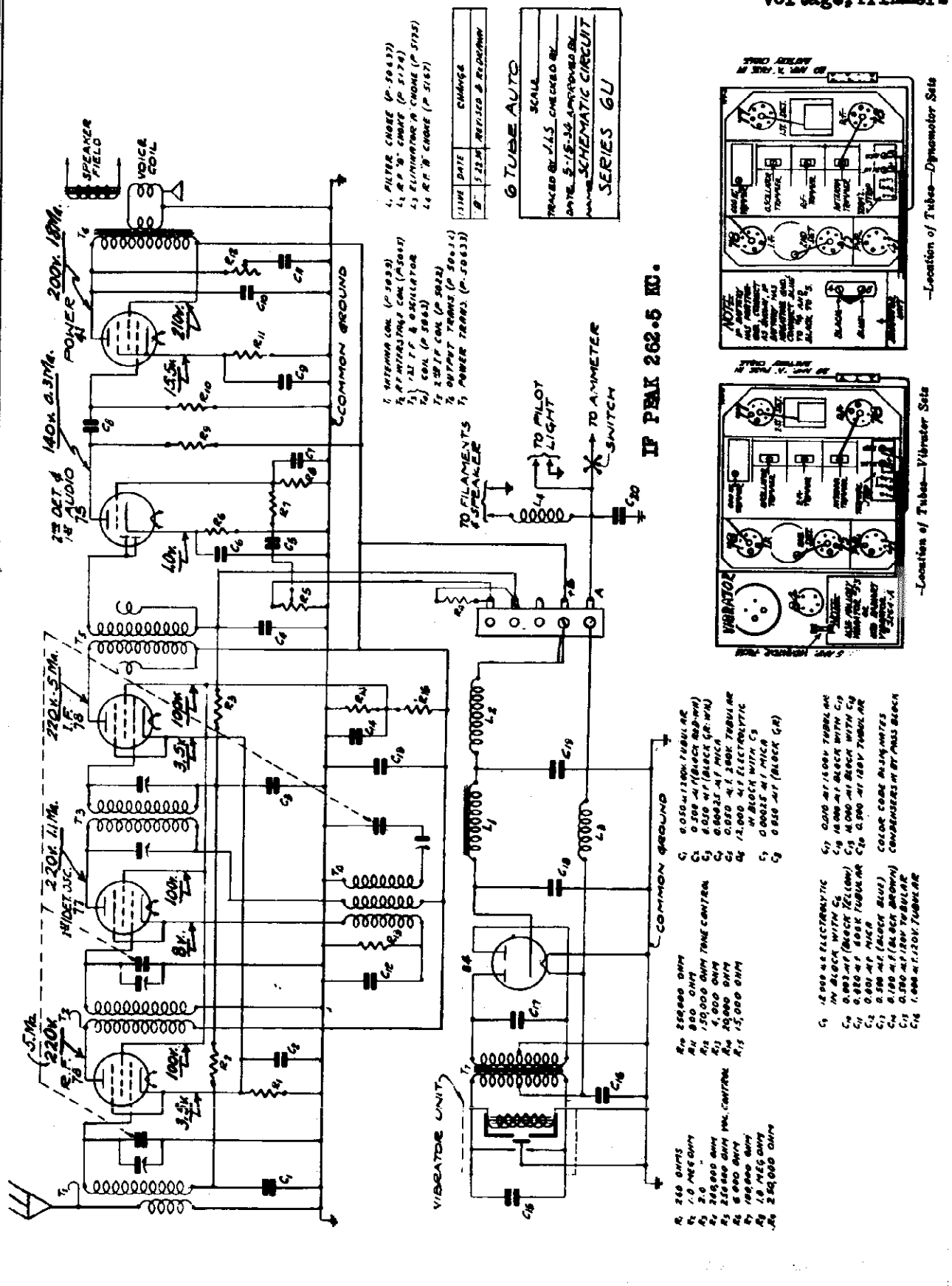

©John F. Rider, Publisher

MODELS 7J-512, 7J-574
Voltage, Socket, Trimmers Color Coding, Phono Data

GAMBLE-SKOGMO, INC.

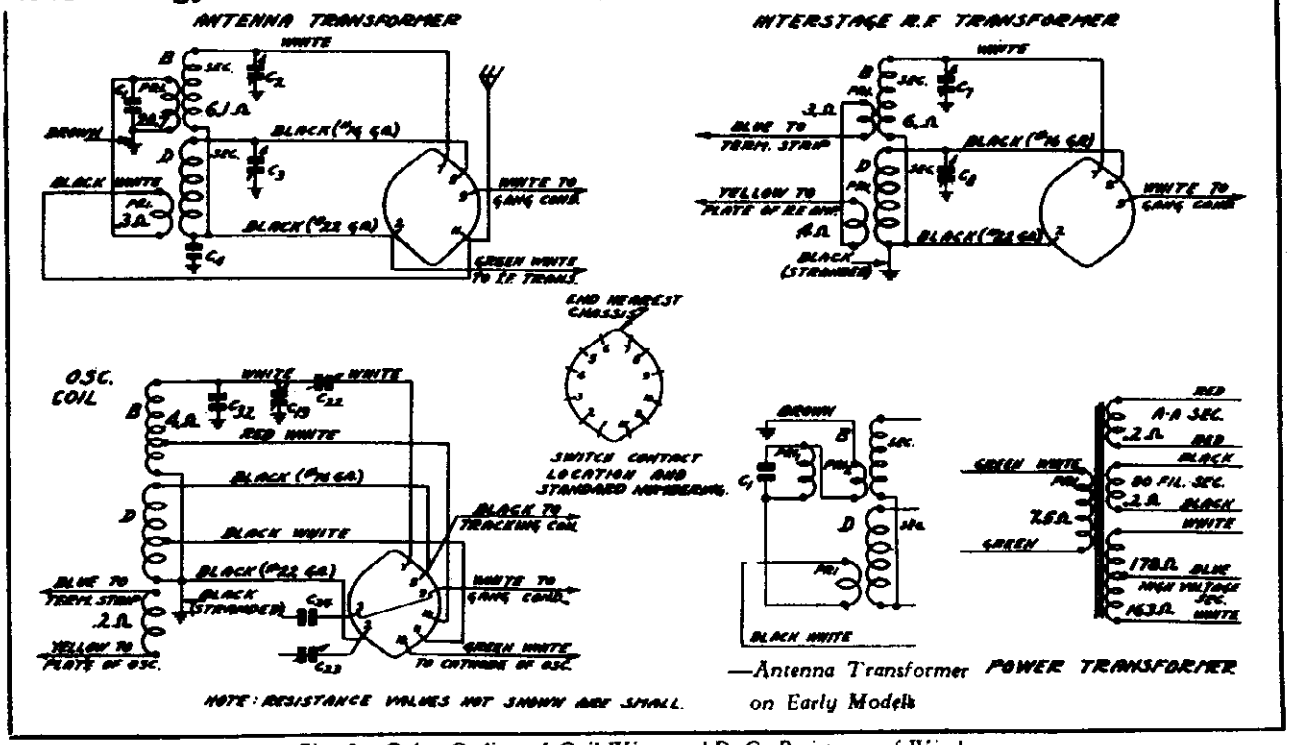

—Antenna Transformer on Early Models

Fig. 3—Color Coding of Coil Wires and D. C. Resistance of Windings

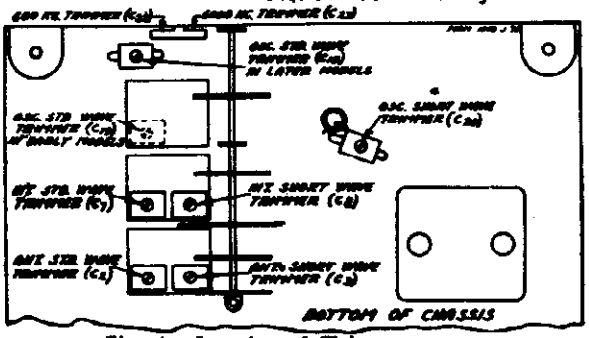

Fig. 4—Location of Trimmers

VOLTAGES AT SOCKETS
Line Voltage - 112
Antenna Shorted to Ground

Type of Tube	Function	Heater Volts	Plate to Ground	Screen to Ground	Cathode to Ground	Plate M. A.
6D6	R. F.	6.1	240	95	3	7.
6D6	1st Det.	6.1	240	100	9	3.5
76	Osc.	6.1	100			5.
6D6	I. F.	6.1	240	120	3	7.5
6B7	2nd Det.	6.1	55	45	0	2.3
42	Power	6.1	225	240	17 (1)	38.0
80	Rectifier	4.6				32.0 per plate

(1) As read across R13.

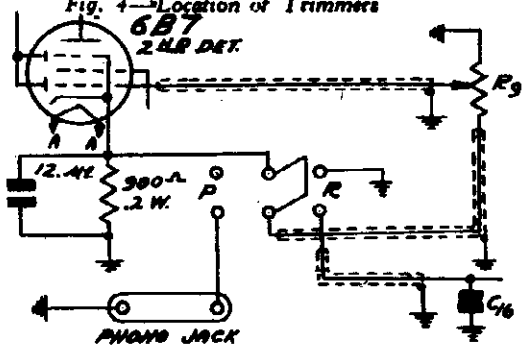

Fig. 7—Phonograph Connections

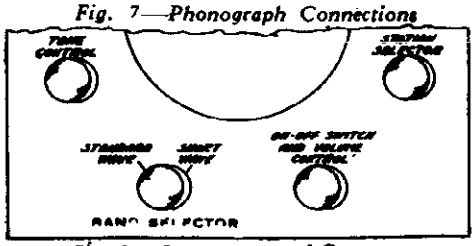

Fig. 1—Arrangement of Controls

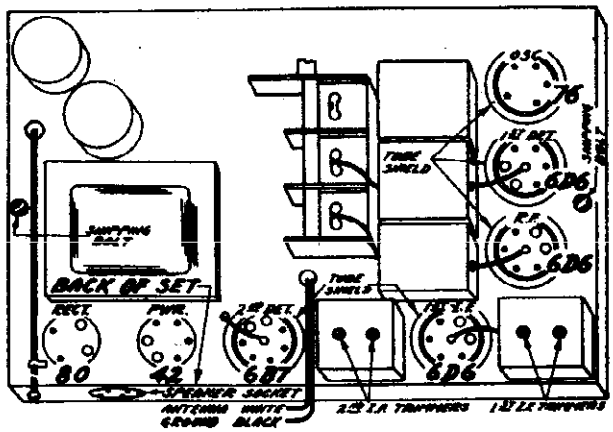

Fig. 6—Location of Tubes

©John F. Rider, Publisher

©John F. Rider, Publisher

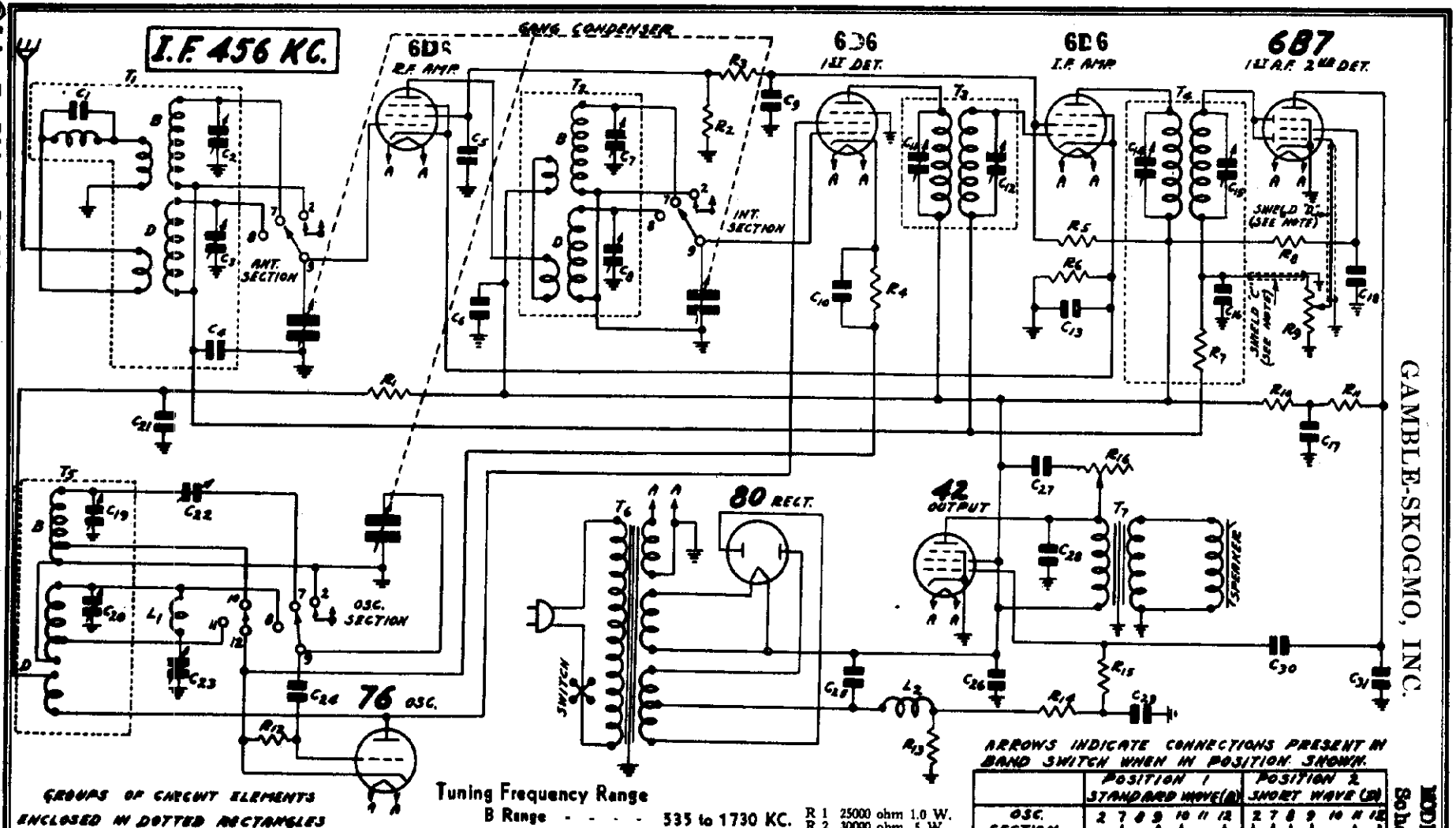

GROUPS OF CIRCUIT ELEMENTS ENCLOSED IN DOTTED RECTANGLES COMPRISE DISTINCT MECHANICAL ASSEMBLIES. THE CAPACITY OF SHIELD "C" AND "D" IS 50 MMF EACH.

Tuning Frequency Range

B Range - - - - 535 to 1730 KC.
D Range - - - - 5.75 to 18.3 MC.

ARROWS INDICATE CONNECTIONS PRESENT IN BAND SWITCH WHEN IN POSITION SHOWN.

	POSITION 1 STANDARD WAVE (B)	POSITION 2 SHORT WAVE (D)
OSC. SECTION	2 7 8 9 10 11 12	2 7 8 9 10 11 12
ANT. & INT. SECTION	2 7 8 9	2 7 8 9

CONTACT LOCATIONS NOT NUMBERED ARE BLANK.

C 1	250 mmf. Moulded				
C 2	2-25 mmf.	C 9	.25 mf. 240 V.	C17	.25 mf. 360 V.
C 3	2-25 mmf.	C10	.05 mf. 180 V.	C18	.25 mf. 360 V.
C 4	.05 mf. 180 V.	C11	70-150 mmf. } One	C19	2-25 mmf.
C 5	.05 mf. 240 V.	C12	70-150 mmf. } Assembly	C20	2-25 mmf.
C 6	.10 mf. 360 V.	C13	.25 mf. 180 V.	C21	.10 mf. 360 V.
C 7	2-25 mmf.	C14	70-150 mmf. } One	C22	300-600 mmf. } One
C 8	2-25 mmf.	C15	150-250 mmf. } Assembly	C23	40-100 mmf. } Assembly
		C16	50 mmf. Moulded	C24	35 mmf. Moulded

C25	14 mf. 400 V. Electrolytic	R 1	25000 ohm 1.0 W.
C26	18 mf. 300 V. Electrolytic	R 2	30000 ohm .5 W.
C27	.05 mf. 600 V.	R 3	6000 ohm .5 W.
C28	.002 mf. 600 V.	R 4	2500 ohm .2 W.
C29	.03 mf. 180 V.	R 5	16000 ohm 2.0 W.
C30	.01 mf. 480 V.	R 6	150 ohm .2 W.
C31	.002 mf. 600 V.	R 7	2.0 Megohm .2 W.
L 1	Osc. Tracking Coil	R 8	300000 ohm .5 W.
L 2	Speaker Field (1050 ohms)	R 9	500000 ohm Volume Control
		R10	20000 ohm .2 W.
		R11	60000 ohm .5 W.
		R12	80000 ohm .2 W.
		R13	235 ohm Armored Wire Wound
		R14	100000 ohm .2 W.
		R15	500000 ohm .2 W.
		R16	150000 ohm Tone Control

T 1	Antenna R. F. Trans.
T 2	Interstage R. F. Trans.
T 3	1st I. F. Trans.
T 4	2nd I. F. Trans.
T 5	Osc. Inductors
T 6	Power Trans.
T 7	Output Trans.

Dual band coverage is accomplished by means of dual sets of R. F. and oscillator coils and a three section double throw switch. The various circuits made and broken as this switch is thrown are indicated in the schematic circuit diagram Fig. 2.

Referring to the schematic, the standard wave coils are indicated by the letter B, while the short wave coils are indicated by the letter D. The antenna transformer primaries are connected in series. When the switch is in the standard wave position, the B secondary is connected to the grid circuit of the 6D6 R.F. amplifier while the C secondary is open circuited. When the switch is in the short wave position, the C secondary is connected to the grid circuit of this tube while the B secondary is short circuited. The secondary in use is tuned by the antenna section of the three gang condenser.

The output of the R. F. 6D6 tube is fed through another R. F. transformer with tuned secondary into a second 6D6 tube which functions as the first detector. The interstage section of the three gang condenser is used for tuning this circuit. As in the case of the antenna transformer, the R. F. interstage transformer standard wave windings are indicated in the schematic by the letter B, while the short wave windings are indicated by the letter D. The connections to the two coils are made in the same manner as described above for the antenna R. F. transformer.

A separate type 76 tube is employed in the oscillator circuit. Referring to the schematic, B is the standard wave grid coil and D is the short wave grid coil. The winding shown below is the oscillator plate coil. The grid coil in use is tuned by the oscillator section of the three gang condenser. The oscillating circuit is always resonant at 456 KC above the frequency to which the R. F. amplifier is tuned. When the switch is in the standard wave position, connections are completed to the B grid coil and the D grid coil is open circuited. When the switch is in the short wave position, connections are completed to the D grid coil and the B grid coil is short circuited. Padding condensers C22 and C23 are used in conjunction with the standard wave and short wave oscillator circuits respectively.

The oscillator potential is fed into the cathode circuit of the 6D6 first detector tube. This results in the intermediate or beat frequency of 456 K.C. being present in the plate circuit of this tube.

One stage of I. F. amplification is employed using a 6D6 tube. The primaries and secondaries of the first and second I. F. transformers are tuned by small trimmer condensers.

A type 6B7 duo diode pentode tube functions as the second detector and a one stage audio amplifier. The two diode plates are connected together. AVC voltage is applied through isolating resistors to the control grid circuits of the R. F. and I. F. tubes. The audio voltage developed across volume control resistor R9 is applied through the movable arm to the control grid of the 6B7 tube. Resistance coupling is used between the first audio stage and the output stage which employs a type 42 output pentode tube. A type 80 full wave rectifier tube is used in the power unit.

Alignment and Calibration

A signal generator that will provide an accurately calibrated signal at 456, 1730, 1500, 600, 18,300, 15,000 and 6000 KC and an output indicating meter are required. It will be practically impossible to align the receiver if unsatisfactory apparatus is used.

Use a non-metallic screw driver for the adjustments. The complete procedure is as follows:

I. F. Adjustment

Set the signal generator for a signal of 456 KC.

Connect the antenna lead of the signal generator thru a .1 MF condenser to the grid of the 1st detector.

Connect the ground lead of the signal generator to the chassis ground.

Turn the band switch to the standard wave position.

Turn the volume control to the maximum position.

Attenuate the signal from the signal generator to prevent the leveling-off action of the A.V.C.

Then adjust the four I. F. trimmers until maximum output is obtained. The adjusting screws for these condensers are reached from the top of the chassis, and the location is shown in Fig. 6.

1730 KC Adjustment

Set the signal generator for 1730 KC.

Turn the rotor of the tuning condenser to the full open position.

Keep the band switch in the standard wave position.

Connect the antenna lead of the receiver through a 250 mmf. condenser to the output of the signal generator.

For this and all subsequent adjustments keep the volume control at the maximum position and attenuate the signal from the signal generator to prevent A.V.C. action.

Adjust the oscillator standard wave trimmer (C19) until maximum output is obtained. The location of this trimmer is shown in Fig. 4.

1500 KC Adjustment

Set the signal generator for 1500 KC.

Turn the rotor of the tuning condenser carefully until maximum output is obtained.

Loosen the pointer set screw and set the pointer at the 1500 KC mark on the standard wave band scale Retighten the set screw.

Adjust the interstage standard wave trimmer (C7) and antenna standard wave trimmer (C2) until maximum output is obtained.

Do not change the setting of the oscillator standard wave trimmer.

600 KC Adjustment

Set the signal generator for 600 KC.

Turn the tuning condenser rotor until maximum output is obtained.

Turn the rotor slowly back and forth at the same time adjusting the 600 KC trimmer until the peak of greatest intensity is obtained. See Fig. 4 for location of this trimmer.

Be sure to use a non-metallic screw driver for this adjustment.

18,300 KC Adjustment

Set the signal generator for 18,300 KC.

Turn the rotor of the tuning condenser to the full open position.

Turn the band switch to the short wave position.

As mentioned above, keep the volume control at the maximum position and attenuate the signal from the signal generator to prevent A.V.C. action.

Adjust the oscillator short wave trimmer (C20) until maximum output is obtained. See Fig. 4 for location of this trimmer.

If a maximum output peak cannot be reached, it may be due to the fact that the antenna and interstage short wave trimmers are screwed down too far. Back off these two trimmer screws two or three turns and then adjust the oscillator short wave trimmer for maximum ouptut.

15,000 KC Adjustment

Set the signal generator for 15,000 KC.

Turn the rotor of the tuning condenser carefully until maximum output is obtained.

—Adjust the interstage short wave trimmer (C8) and antenna short wave trimmer (C3) until maximum output is obtained.

When adjusting the interstage short wave trimmer, it will be necessary at the same time to turn the tuning condenser rotor slowly back and forth until the peak of greatest intensity is obtained.

Then go back and repeat the procedure as given for the 18,300 KC adjustment. If it is found necessary to make any appreciable change in the setting of the oscillator short wave trimmer, the 15,000 KC adjustment must be repeated.

Do not make any further change in the setting of the oscillator short wave trimmer.

6000 KC Adjustment

Set the signal generator for 6000 KC.

Turn the tuning condenser rotor until maximum output is obtained.

Turn the rotor slowly back and forth at the same time adjusting the 6000 KC trimmer until the peak of greatest intensity is obtained. See Fig. 4 for location of this trimmer.

Use a non-metallic screw driver for this adjustment.

Servicing R. F. Coil Assemblies

The R. F. coil assemblies in this receiver are sold complete with can. This is due to the fact that the trimmers are soldered to the can, and cannot be easily disassembled.

The lead colors and resistances of the various windings in each assembly are shown in Fig. 3.

If it is ever necessary to remove one of coil assemblies from the can, proceed as follows: First remove the nuts from the screws at the top of the can. The outside lug on the trimmer condenser is inserted in a slot in the coil can, and this lug is soldered into position.

Apply a soldering iron to the can at the point of the soldered connection. Then with a screw driver lift up on the outside edge of the trimmer (edge soldered to can) until the trimmer is clear of the can. After the trimmers are all unsoldered, the coil can be taken out.

Twenty-five Cycle Receivers

The twenty-five cycle receiver differs from the sixty cycle receiver only in the fact that a different power transformer is used. The correct power transformer is shown in the parts list.

The twenty-five cycle chassis can be operated satisfactorily from a sixty cycle power supply. However, the reverse is not true, the sixty cycle receiver cannot be operated from a twenty-five cycle power supply.

A 115-230 Volt, 40 to 60 cycle as well as other power transformers with special power ratings are also available for this model.

Phonograph Connections

Phonograph connections can be made as shown in Fig. 7. The parts required are shown in the parts list. Knockouts are provided in the back panel of the chassis for mounting the phono jack and phono switch —see Fig. 8.

For mounting the 12 mfd. 25 volt dry electrolytic condenser, two No. 27 drill holes should be drilled in the side of the chassis base directly below the wet electrolytic condensers. These holes are 1¼" from the bottom, ⅛" and 3¼" from the front of the chassis.

The ground lug which extends out from the side of the chassis should be bent back into the chassis wall.

The connections are made by opening the diode return circuit at the volume control. Unsolder the shielded lead which runs from the I. F. transformer to the volume control at the lug on the volume control. Cut this lead to length and connect it to the switch as shown in Fig. 7. The extra length of shielded lead which is provided, is connected from the volume control R9 to the phono switch as illustrated.

Remove the ground from the cathode terminal of the 6B7 2nd detector tube by bending the chassis ground lug away from this terminal. Be sure to solder back to this ground lug any leads that were connected to it (not including cathode connection of socket).

Connect one side of the 12 mfd. 25 volt electrolytic condenser to ground and the other side of the condenser to the cathode terminal of the 6B7 2nd detector and the phono switch as shown in Fig. 7. To this same terminal on the phono switch connect the 900 ohm .2 watt resistor. The other side of this resistor goes to ground. Complete the other connections as illustrated.

A high impedance pick-up should be used. If a low impedance pick-up is used a step-up transformer will be required for sufficient volume. The volume control and tone control of the set will regulate the phono volume and tone.

Changes in Early Models

In the early models of this receiver the oscillator standard wave trimmer C19 was in the oscillator coil can—see Fig. 4.

In the early models the antenna transformer had two B primary windings as shown in Fig. 5. In later models only one winding was used as shown in Fig. 3.

©John F. Rider, Publisher

©John F. Rider, Publisher

MODEL 20-C-3 Schematic Parts List

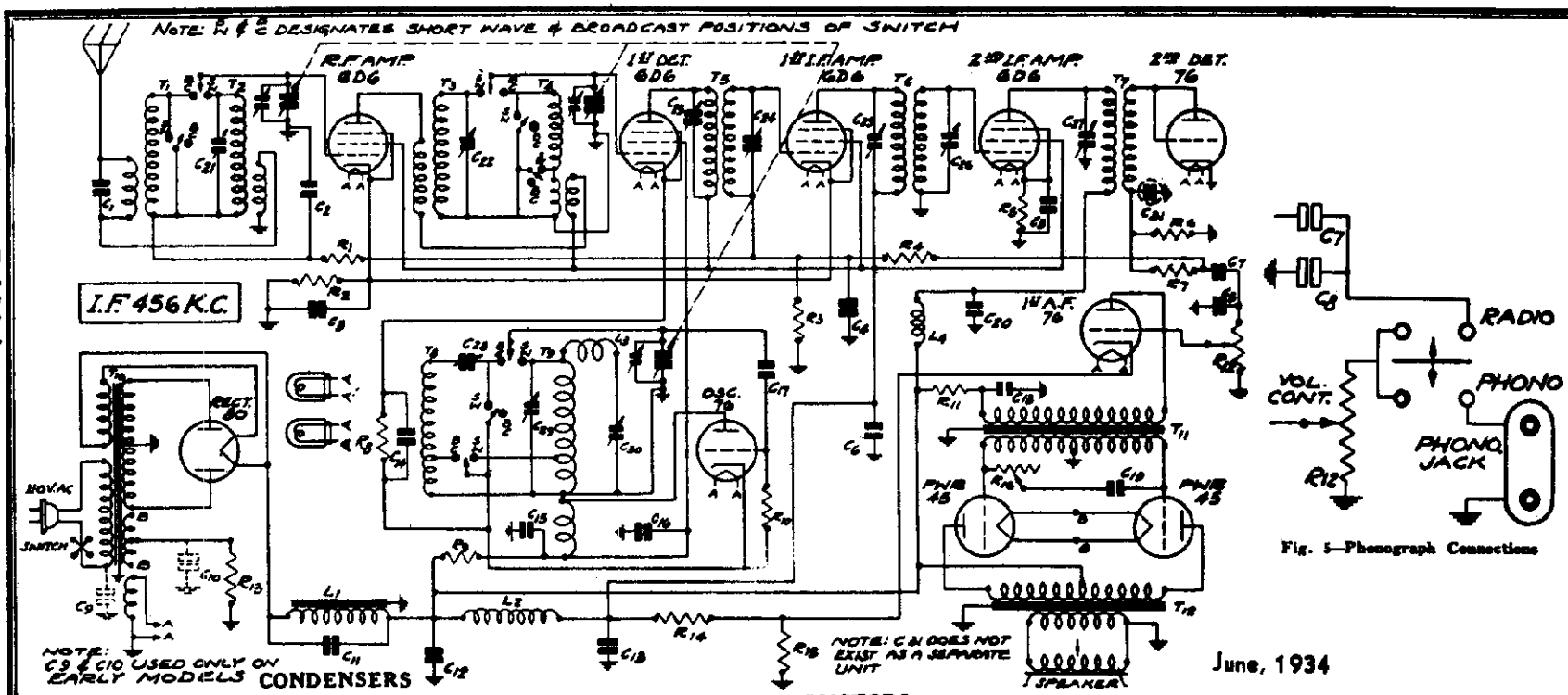

Fig. 5—Phonograph Connections

June, 1934

Fig. 1—Schematic Circuit Diagram

CONDENSERS

Part No.	Code	Capacity	Volts	Type
P-80919	C1	250 mmfd.		Moulded
P-80862	C2	.05 mfd.	200V.	Tubular
P-80888	C3	.25 mfd.	200V.	Tubular
P-80862	C4	.05 mfd.	200V.	Tubular
P-80862	C5	.05 mfd.	200V.	Tubular ....
P-80888	C6	.25 mfd.	200V.	Tubular .....
P-80862	C7	.05 mfd.	200V.	Tubular .....
P-81005	C8	35 mmfd.	600V.	Moulded .....
*P-80997	C9	.01 mfd.	600V.	Condenser in metal can
*P-80888	C10	.25 mfd.	200V.	Tubular .....
P-80985	C11	.15 mfd.	200V.	Tubular .....
P-81039	C12	16.0 mfd.	400V.	Wet Electrolytic .....
P-81018	C13	6.0 mfd.	150V.	Dry Electrolytic .....
	C16	2.0 mfd.	300V.	
	C18	2.0 mfd.	300V.	
P-80862	C14	.05 mfd.	200V.	Tubular .....
P-80864	C15	.10 mfd.	200V.	Tubular .....
P-81005	C17	35 mmfd.	600V.	Moulded .....
P-80863	C19	.004 mfd.	600V.	Tubular .....
P-81041	C20	.10 mfd.	400V.	Tubular .....
P-2102	C21	3-40 mmfd.		Ant. S.W. Trimmer ....
P-2102	C22	3-40 mmfd.		1st Det. S.W. Trimmer
P-2103	C23	200± 50 mmfd.		Dual Trimmer
	C24	200± 50 mmfd.		Part of I.F. Assem.
P-2103	C25	200± 50 mmfd.		Dual Trimmer
	C26	200± 50 mmfd.		Part of I.F. Assem.
P-1685	C27	70± 30 mmfd.		3rd I.F. Coil Trimmer
P-2112	C28	300-500 mmfd.		600 K.C. Trimmer ..
P-2102	C29	3-40 mmfd.		Osc. S.W. Trimmer
P-1685	C30	70± 30 mmfd.		6000 K.C. Trimmer
P-81027		Three Gang Condenser		

RESISTORS

Part No.	Code	Resistance	Watts	Type
P-A95204	R1	200,000 ohm	.2	Carbon .....
P-98023	R2	150 ohm	.5	Flex. Wire Wound ....
P-A95105	R3	1 megohm	.2	Carbon .....
P-A95205	R4	2 megohm	.2	Carbon .....
P-98024	R5	400 ohm	.5	Flex. Wire Wound .....
P-A94304	R6	300,000 ohm	.2	Carbon .....
P-A95104	R7	100,000 ohm	.2	Carbon .....
P-A94252	R8	2,500 ohm	.2	Carbon .....
P-98022	R9	30,000 ohm	2.0	Carbon .....
P-A95104	R10	100,000 ohm	.2	Carbon .....
P-C94303	R11	30,000 ohm	1.0	Carbon .....
P-96005	R12	2 megohm		Volume Control and Switch...
P-98006	R13	780 ohm	3.0	Armored Wire Wound
	R14	6000 ohm	1.4	
	R15	460 ohm	.2	
P-97003	R16	3 megohm		Tone Control .....

*Used in Early Models only.

Part No.	Item
P-50638	Power Transformer 115V. 60 cycles T 10 .....
P-50639	Power Transformer 115V. 25 cycles T 10 .....
P-50640	Power Transformer 115-230V. 40-60 cycles T 10
P-50641	Power Choke L 1 .....
P-50642	Audio Output Transformer T 12 .....
P-50643	Audio Input Transformer T 11 .....
P-5176	Antenna R.F. Trans. T 1 and T 2 less can ...
P-5177	Interstage R.F. Trans. T3 and T4 less can ...
P-5178	Oscillator Coil Assembly T8 and T9 less can ....
P-5186	3rd I. F. Coil T7 less can .....
P-40433	Cans for the above coils .....
P-5184	1st I.F. Coil & Can Assembly T5 .....
P-5185	2nd I.F. Coil & Can Assembly T6 .....
P-5190	H. F. Oscillator Tracking Coil L3 .....
P-5151	I.F. Plate Isolating Reactor L4 .....
P-70702	A.C. Cord & Plug .....
P-1421	Single Insulated Terminal Strip .....
P-1441	Double Insulated Terminal Strip .. ..
P-2060	Small Knob .....
P-2062	Large Knob .....
P-30342A	Grid Cap only .....
P-30456	Small Pointer .....
P-20912	Large Double End Pointer ....
P-2012	Pilot Light Bulb .....
P-10272	Rubber Mounting Feet .....
P-10320	Glass Crystal .....
P-20875	Crystal Retaining Ring .....
P-2152	8" Dynamic Speaker Mantel L2 .....
P-1968	10" Dynamic Speaker Console L2 .....
P-2101	Three Position Band Change Switch .....
P-20905	Condenser Shield .....
	6' Black Drive Cord (V.C. or T.C. Ind.)
	20" Black Drive Cord (Cond. Drive) .....
P-2126	Pilot Lamp Socket & Clip Assembly ...
P-20911	Bottom Shield .....
P-1011A	Phono-Radio Switch .....
P-1193	Phono Jack .....
P-2025	No. 80 Socket .....
P-1643	No. 45 Socket .....
P-2022	No. 76 Socket .....
P-1885	No. 6D6 Socket .....
P-1637	Speaker Socket .....
P-40434	Tube Shield—Aluminum (for earlier models) .....
P-40424	Tube Shield Base—Aluminum (for earlier models)

©John F. Rider, Publisher

Replacing Drive Cord

Remove chassis from cabinet.

Take off the pilot light assembly by lifting off the two sockets and spring clips.

Detach the large pointer by removing the screw at the center of the dial.

Loosen the dial assembly by taking out the two screws which secure the bottom of this assembly to the chassis.

Then lay the complete dial assembly face downward in front of the chassis. It is not necessary to remove the volume control and tone control collars which hold the indicator cords of these two controls in position.

Turn the drive drum until the opening in this drum is approximately vertical and with the hole at the top as shown in Fig. 4.

Remove the tension spring and the old drive cord.

See that the eyelet is in the hole in the drive drum as shown in Fig. 4. Insert one end of the drive cord from the outside through the hole in the eyelet in the drive drum.

Tie the end of the cord which has been inserted in the hole to one end of the tension spring.

Wrap the cord in a clockwise direction (facing front of chassis) around the drive drum approximately one-half turn.

Then tilt the chassis up on its back panel and bring the cord mentioned in the previous paragraph down to the drive shaft. Wrap it two and one-half times around the drive shaft as shown in Fig. 4.

Then bring this cord up from the drive shaft and wrap it around the drive drum approximately one and one fifth

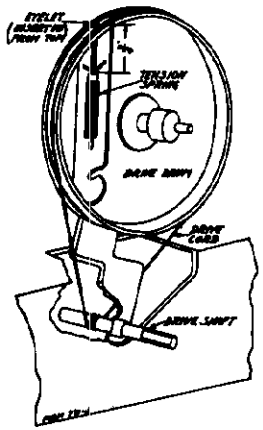

Fig. 4—Drive Cord Replacement

turns in a clockwise direction until it is up to the hole in this drum as illustrated.

Insert the free end of the cord through the hole in the eyelet and tie it to the end of the tension spring. The end of the spring, when hanging free, should be approximately ¾" from the flange of the drum as shown in Fig. 4. Cut off the surplus length of cord after it is knotted.

Then secure the other end of the tension spring over the spur on the drive drum.

Replace the dial assembly and pointer.

Replace the pilot light assembly after which the chassis may be reinstalled in the cabinet.

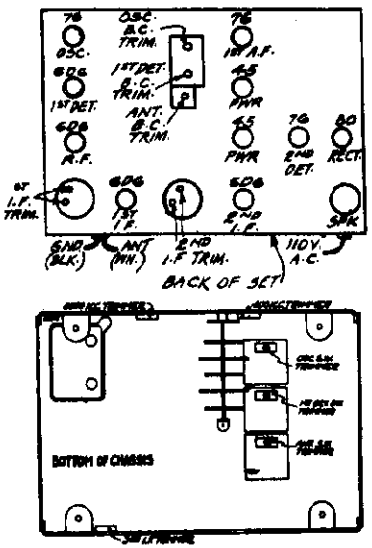

Fig. 1—Tube Arrangement & Location of Trimmers

Voltages at Sockets

LINE VOLTAGE — 115

ANTENNA SHORTED TO GROUND

Type of Tube	Function	Across Fils. or Heater	Plate to Cath.	Screen to Cath.	Cath. to Ground	Normal Plate M. A.
6D6	R. F.	6.3	95	95	2.8	7.0
6D6	1st Det.	6.3	88	95	9.2	2.9
76	Osc.	6.3	110	—	—	5.0
6D6	1st I. F.	6.3	95	95	2.8	7.0
6D6	2nd I. F.	6.3	300	95	3.3	6.0
76	2nd Det.	6.3	—	—	—	—
76	1st Audio	6.3	160	—	9.0	4.0
45	Output	2.5	245	—	48.0	30.0
80	Rectifier	5.0	390 V. A. C. pl. to pl.			58.0 per plate

Phono Connections

Phonograph connections can be made as shown in Fig. 5. A single pole double throw switch and double pin jack are required. These should be mounted on the back panel of the chassis close to the 2nd detector. The connections are made by opening the diode circuit at the point shown in the illustration and completing the connections to the switch and pin jacks as indicated. A high impedance pick-up should be used. If a low impedance pick-up is used a step-up transformer will be required for sufficient volume. The volume control of the set will regulate the phono volume.

Change in Early Models

In the early models of this receiver the side of the trimmer condenser C27 which is shown in Fig. 1 as connected to ground was connected to the B+ side of the 3rd I. F. coil primary.

Condenser Alignment

Correct alignment is extremely important in connection with all wave receivers. The receivers are all properly aligned at the factory with precision instruments and realignment should not be attempted unless all other possible causes of the faulty operation have first been investigated and unless the service technician has the proper equipment. A signal generator that will provide an accurately calibrated signal of 456 K. C. and accurately calibrated signals over the broadcast and short wave bands, 530-1740 K. C. and 5.8-18.3 M. C., is required. An output indicating meter is also necessary. It will be practically impossible to align the receiver if unsatisfactory apparatus is used.

Use a non-metallic screw driver for the adjustments. The complete procedure is as follows:

Intermediate Frequency Adjustment

Set the signal generator for 456 K. C. Connect the antenna lead of the signal generator to the grid of the 1st detector through a .05 mfd. condenser. Turn the tuning condenser rotor until the plates are completely out. The ground lead from the signal generator goes to the ground lead of the receiver. The volume control should be at the maximum position. Reduce the signal so that A. V. C. action is not obtained.

Then adjust the five I. F. trimmer condensers until maximum output is obtained. The adjusting screws for the 1st and 2nd trimmer condensers are reached from the top of the chassis and are in the round I. F. cans - See Fig. 2. The openings to these trimmer condensers are covered over by small cover plates which are held in position by screws. Loosen these screws until the cover plates can be swung around. **CAUTION - Use an insulated screwdriver for adjusting trimmers to prevent short circuiting to ground.** In the 3rd I. F. coil, only the primary has a variable trimmer condenser. This condenser is mounted on the back panel of the chassis as shown in Fig. 2 and the adjustment screw is reached through a hole in the back panel.

Broadcast Band Adjustment

The broadcast short wave switch should be in the broadcast position. Set the signal generator for 1740 K. C. Turn the rotor to the full open position. The antenna lead from the signal generator is in this instance connected to the antenna lead of the receiver. Reduce the signal so that A. V. C. action is not obtained. Adjust the oscillator broadcast trimmer until maximum output is obtained. This trimmer is on the tuning condenser and its location is shown in Fig. 2.

Then set the signal generator for 1500 K. C. Turn the rotor until maximum output is obtained. Loosen the set screw in the pointer hub and set the pointer at the 1500 K. C. mark on the broadcast band scale. Retighten the hub set screw. Then adjust the antenna and 1st detector broadcast trimmers until maximum output is obtained.

Next set the signal generator for 600 K. C. and adjust the 600 K. C. trimmer. The adjusting screw is reached through a hole in the front panel of the chassis as shown in Fig. 2. Turn the tuning condenser rotor until maximum output is obtained. Then turn the rotor slowly back and forth over this setting at the same time adjusting the 600 K. C. trimmer screw until the highest output is obtained.

Short Wave Band Adjustment

CAUTION—After the broadcast band alignment as described above has been made, do not change the adjustment of any of the broadcast band trimmers.

In aligning the short wave band of the receiver, it will be noted that the signal will be heard with the signal generator set at two points 912 K. C. apart. That is, if the receiver is tuned to 15,000 K. C. a signal will be heard when the signal generator is set at 15,000 K. C. and again at approximately 15,912 K. C. This is due to image reception or the fact that a 456 K. C. beat is obtained when the signal is 456 K. C. lower than the receiver oscillator and also when the signal is 456 K. C. higher than the receiver oscillator. Care should be taken to see that the receiver is tracked with the signal generator adjusted to the lower of the two frequencies at which a signal is heard, in order that the oscillator in the receiver will be 456 K.C. higher in frequency than the signal.

Turn the broadcast short wave switch to the short wave position. Turn the rotor to the full open position. As explained above, the volume control should be at the maximum position and the signal should be reduced to prevent A. V. C. action. Set the signal generator for 18,300 K. C. Then adjust the oscillator short wave trimmer for maximum output. This trimmer is reached from under the chassis and its position is shown in Fig. 2. If a maximum output peak cannot be reached, it may be due to the fact that the antenna and 1st detector short wave trimmers are screwed down too far. Back off these two trimmer screws two or three turns and then adjust the oscillator short wave trimmer for maximum output.

Next set the signal generator for 15,000 K. C. Turn the rotor until maximum output is obtained. Then adjust the antenna and 1st detector short wave trimmers for maximum output.

Next set the signal generator for 6000 K. C. and adjust the 6000 K. C. trimmer. This condenser is mounted on the front panel of the chassis as shown in Fig. 2 and is reached through a hole in the front panel. Turn the tuning condenser rotor until maximum output is obtained. Then turn the rotor slowly back and forth over this setting, at the same time adjusting the 6000 K. C. trimmer screw until the highest output is obtained.

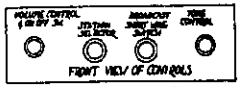

Fig. 3—Arrangement of Controls

D. C. Resistance of Windings

Following are the D.C. resistances of the various windings in the chassis.

Part No.	Item	Code		D.C. Resistance in Ohms
P-5176	S.W. and B.C. Antenna R.F. Transformer Primaries (in series)	T1	T2	27.5
	B.C. Antenna R.F. Transformer Secondary	T1		5.0
	S.W. Antenna R.F. Transformer Secondary	T2		Small
P-5177	S.W. and B.C. Interstage R.F. Transformer Primaries (in series)	T3	T4	2.7
	S.W. and B.C. Interstage R.F. Transformer Secondary	T4		4.4
	B.C. Interstage R.F. Transformer Secondary	T3		Small
P-5178	S.W. Oscillator Grid Coil	T9		Small
	S.W. Oscillator Plate Coil	T8		.35
	B.C. Oscillator Grid Coil	T6		2.5
	B.C. Oscillator Tracking Coil	L3		1.27
P-5180	1st I.F. Coil Primary	T5		5.0
P-5184	1st I.F. Coil Secondary	T5		5.0
	2nd I.F. Coil Primary	T6		5.0
P-5185	2nd I.F. Coil Secondary	T6		5.0
	3rd I.F. Coil Primary	T7		5.3
P-5186	3rd I.F. Coil Secondary	T7		26.3
P-30643	Audio Input Transformer Primary	T11		2600.
	Audio Input Transformer Secondary Center Tap to Outside	T11		2600.
	Audio Input Transformer Secondary Center Tap to Inside	T11		2600.
P-30642	Audio Output Transformer Primary	T12		160.
	Audio Output Transformer Primary Center Tap to Inside	T12		120.
	Audio Output Transformer Secondary	T13		.04
P-1908	Speaker Voice Coil			2.0
	Speaker Field Coil	L2		2000.
P-30641	Filter Choke	L1		150.
P-30638	Power Transformer 115V. 60 Cycles Pri.	T10		5.3
	Power Transformer 115V. 60 Cycles H.T. Sec. Center Tap to Outside	T10		125.
	Power Transformer 115V. 60 Cycles H.T. Sec. Center Tap to Inside	T10		130.
	Power Transformer 115V. 60 Cycles Sec. (80 FIL.)	T10		Small
	Power Transformer 115V. 60 Cycles Sec. (AA FIL.)	T10		Small
	Power Transformer 115V. 60 Cycles Sec. (BB FIL.)	T10		Small

GAMBLE-SKOGMO, INC.

MODEL 22-014-576
Schematic

Power Consumption - 140 Watts (At 115 volts 60 cycles)
Power Output - - - - - - 15 Watts Undistorted

Tuning Frequency Range
B Range - - - - - - - - 535 to 1730 KC.
C Range - - - - - - - - 1715 to 5800 KC.
D Range - - - - - - - - 5750 to 18300 KC.

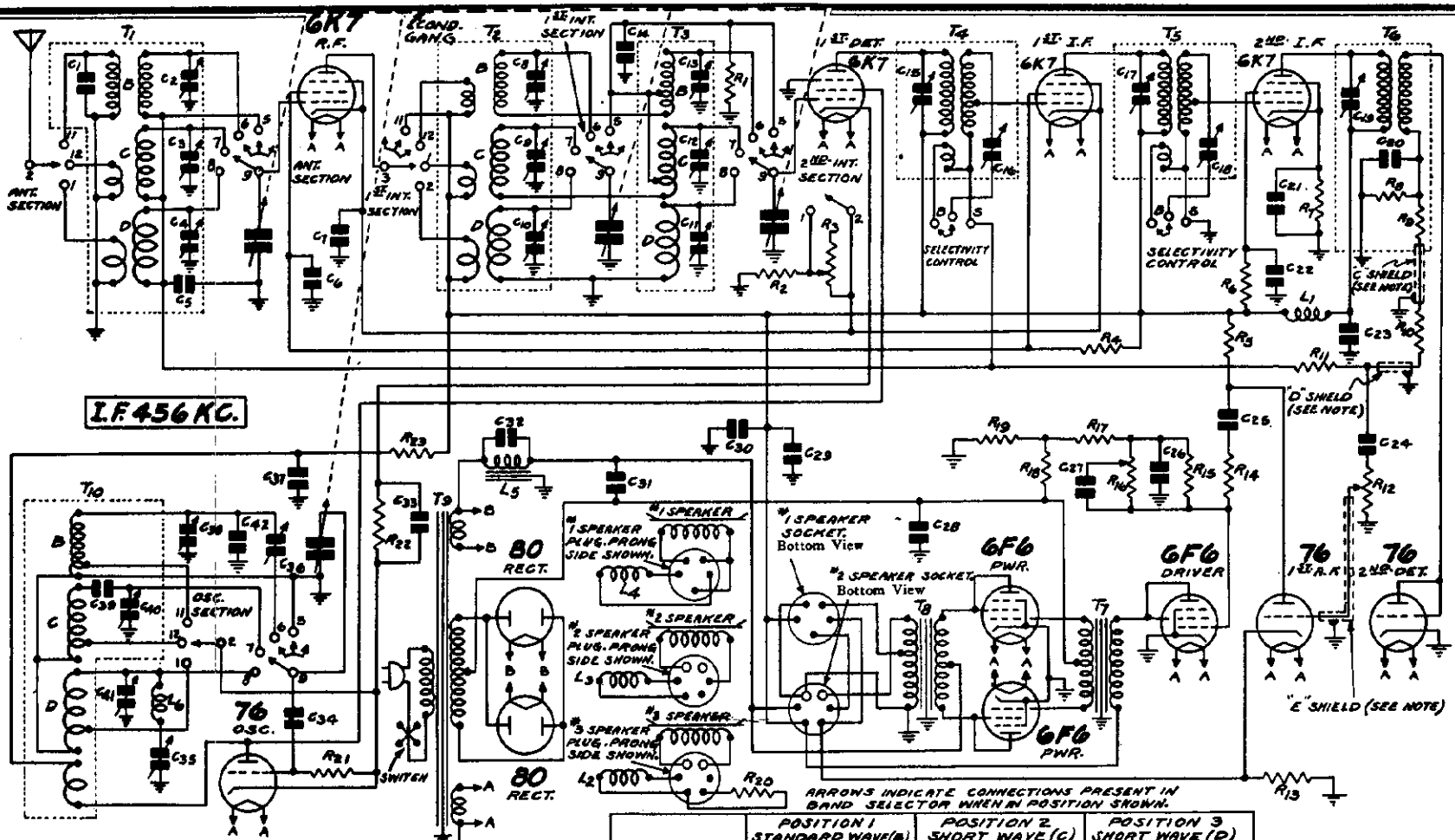

ARROWS INDICATE CONNECTIONS PRESENT IN BAND SELECTOR WHEN IN POSITION SHOWN.

	POSITION 1 STANDARD WAVE (B)	POSITION 2 SHORT WAVE (C)	POSITION 3 SHORT WAVE (D)
OSC. AND ANT. SECTION	11 12 1 2 5 6 7 8 9	11 12 1 2 5 6 7 8 9	11 12 1 2 5 6 7 8 9
2nd INT. SECTION	1 2 5 6 7 8 9	1 2 5 6 7 8 9	1 2 5 6 7 8 9
1st INT. SECTION	11 12 1 2 3 5 6 7 8 9	11 12 1 2 3 5 6 7 8 9	11 12 1 2 3 5 6 7 8 9

CONTACT LOCATIONS 3, 4 AND 10 IN OSC. AND ANT. SECTIONS, 3, 4, 10, 11 AND 12 IN 2nd INT. SECTION AND 4 AND 10 IN 1st INT. SECTION ARE BLANK.

GROUPS OF CIRCUIT ELEMENTS ENCLOSED IN DOTTED RECTANGLES COMPRISE DISTINCT MECHANICAL ASSEMBLIES.
"B" AND "S" ON SELECTIVITY CONTROL DENOTES "BROAD" AND "SHARP" RESPECTIVELY.
THE CAPACITY OF THE "C" SHIELD IS 20 μμf.
THE CAPACITY OF THE "D" SHIELD IS 70 μμf.
THE CAPACITY OF THE "E" SHIELD IS 16 μμf.
ON SETS USING ONE SPEAKER THE #3 SPEAKER IS FURNISHED.
ON SETS USING TWO SPEAKERS THE #1 AND #2 SPEAKERS ARE FURNISHED.

October, 1935

C 1	250 mmf.	C13	2-25 mmf.	C25	.05 mf. 360 V.	C37	.25 mf. 360 V.	R 5	60,000 ohm 0.5 watt	R18	128 ohm 2.5 watt } Armored	T 6	3rd I.F. Trans.		
C 2	2-25 mmf.	C14	.05 mf. 180 V.	C26	.25 mf. 180 V.	C38	2-25 mmf.	R 6	100,000 ohm 0.5 watt	R19	145 ohm 3.0 watt } Wire-Wound	T 7	Push-Pull Input Trans.		
C 3	2-25 mmf.	C15	150-250 mmf. } One	C27	.004 mf. 600 V.	C39	1400 mmf.	R 7	500 ohm 0.2 watt	R20	7800 ohm 12.0 watt	T 8	Push-Pull Output Trans.		
C 4	2-25 mmf.	C16	150-250 mmf. } Unit	C28	125.0 mf. 45 V. Electrolytic	C40	2-25 mmf.	R 8	200,000 ohm 0.5 watt	R21	80,000 ohm 0.2 watt	T 9	Power Trans.		
C 5	.05 mf. 180 V.	C17	150-250 mmf. } One	C29	18.0 mf. 250 V. Electrolytic	C41	2-25 mmf.	R 9	100,000 ohm 0.2 watt	R22	2,500 ohm 0.2 watt	T10	Osc. Inductors		
C 6	.70 mf. 360 V.	C18	150-250 mmf. } Unit	C30	.25 mf. 360 V.	C42	10 mmf.	R10	100,000 ohm 0.2 watt	R23	27,000 ohm 1.0 watt				
C 7	.25 mf. 180 V.	C19	70-150 mmf.	C31	30.0 mf. 450 V. Electrolytic			R11	2.0 megohm 0.2 watt						
C 8	2-25 mmf.	C20	50 mmf.	C32	.15 mf. 280 V. A. C.	R 1	25,000 ohm 0.2 watt	R13	200 ohm 0.5 watt	T 1	Ant. R.F. Trans.	L 1	2nd I. F. Plate Isolating Reactor		
C 9	2-25 mmf.	C21	.05 mf. 180 V.	C33	.05 mf. 180 V.	R 2	150 ohm 0.2 watt	R14	250,000 ohm 0.2 watt	T 2	1st Interstage R.F. Trans.	L 2	No. 3 Speaker Field (1000 ohm)		
C10	2-25 mmf.	C22	.05 mf. 180 V.	C34	35 mmf.	R 3	2500 ohm } Dual Volume	R15	250,000 ohm 0.2 watt	T 3	2nd Interstage R.F. Trans.	L 3	No. 2 Speaker Field (1000 ohm)		
C11	2-25 mmf.	C23	.10 mf. 180 V.	C35	40-100 mmf. } One	R12	2.0 megohm } Control	R16	3.0 megohm Tone Control	T 4	1st I.F. Trans.	L 4	No. 1 Speaker Field (6400 ohm)		
C12	2-25 mmf.	C24	.01 mf. 180 V.	C36	300-600 mmf. } Unit	R 4	50,000 ohm 1.0 watt	R17	100,000 ohm 0.2 watt	T 5	2nd I.F. Trans.	L 5	Choke Coil		
												L 6	Osc. Tracking Coil		

MODEL 22-CM-576
Color Coding, Socket
Trimmers, Voltage
Phono Connections

GAMBLE-SKOGMO, INC.

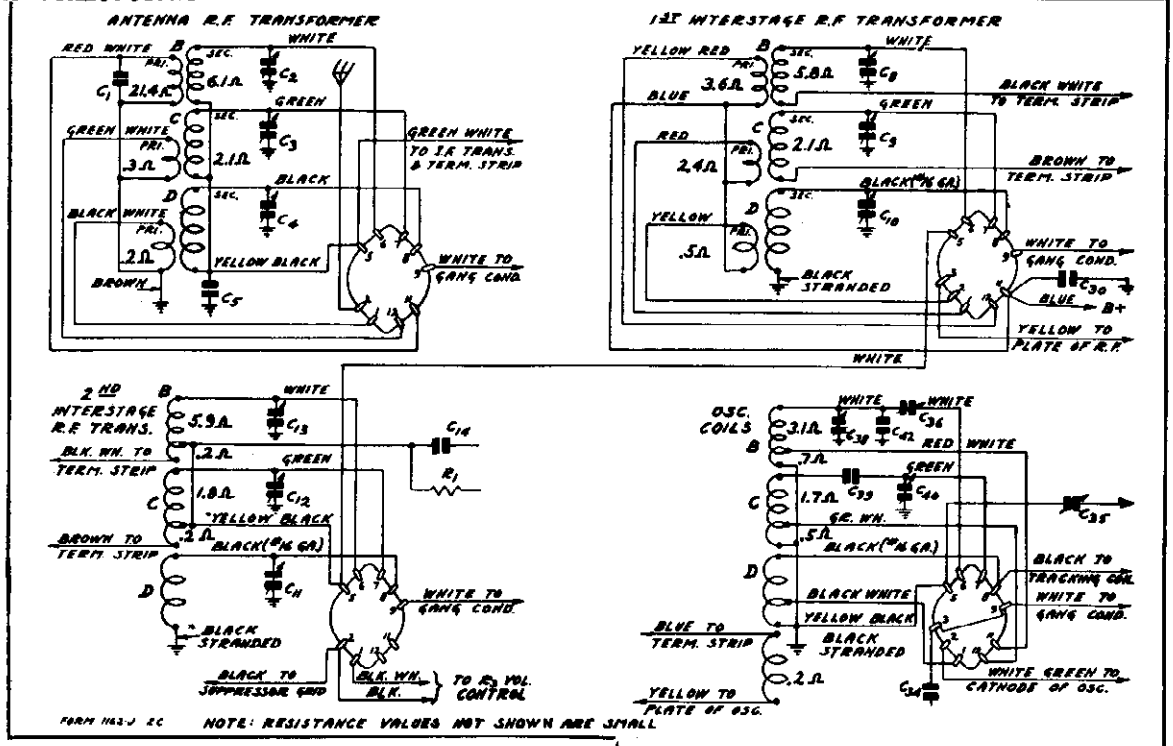

Fig. 4—Color Coding of Coil Wires and D. C. Resistance of Windings. (Also see complete D. C. Resistance List)

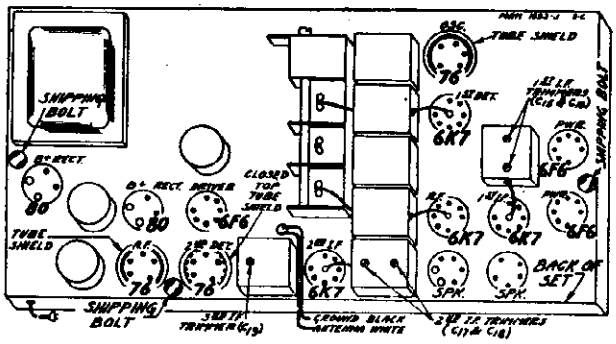

Fig. 5—Location of Tubes

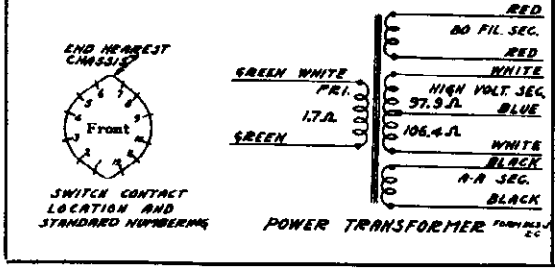

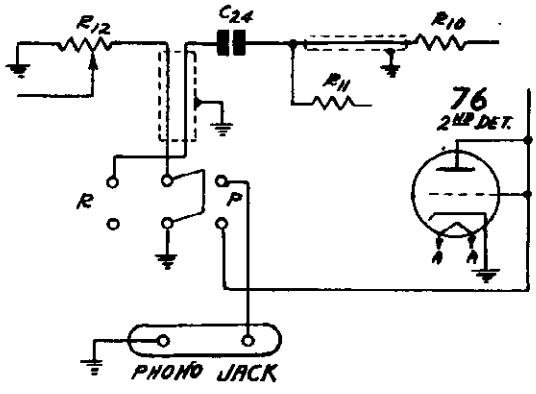

Fig. 7—Phonograph Connections

VOLTAGES AT SOCKETS
Line Voltage 115 - Antenna Shorted to Ground
Volume Control at Maximum

Tube	Function	Across Heater	Plate to Ground	Screen to Ground	Cath. to Ground	Cath. M A
6K7	R. F.	6.2	245	80	2.8	7.6
6K7	1st Det.	6.2	245	90	6.5	2.6
76	Osc.	6.2	90			5.3
6K7	1st I. F.	6.2	245	80	2.8	7.6
6K7	2nd I. F.	6.2	245	74	3.9	7.0
76	2nd Det.	6.2				
76	1st A. F.	6.2	110		5.6	2.1
6F6	Driver	6.2	235	230	20.0(1)	27.0
6F6	Power	6.2	345	345	38.0(2)	22.5
80	Rectifier	5.1	500(3)			140.0(4)

(1) As read across R19
(2) Grid to Ground
(3) Plate to Center Tap
(4) Two tubes in parallel

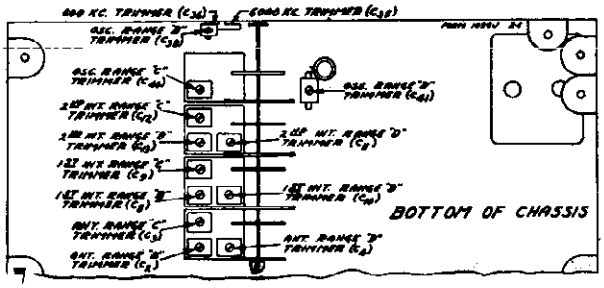

Fig. 3—Location of Trimmers

©John F. Rider. Publisher

©John F. Rider, Publisher

Alignment and Calibration

Correct alignment is extremely important in connection with all wave receivers. The receivers are all properly aligned at the factory with precision instruments and realignment should not be attempted unless all other possible causes of the faulty operation have first been investigated and unless the service technician has the proper equipment.

A signal generator that will provide an accurately calibrated signal at 456, 1730, 1500, 600, 5800, 5000, 18,300, 15,000 and 6000 KC and an output indicating meter are required. It will be practically impossible to align the receiver if unsatisfactory apparatus is used. If a station is tuned in with the selectivity control in the broad position and this control is then turned to the sharp position, the station may disappear. This is not an indication that the receiver is out of alignment.

Use a non-metallic screwdriver for the adjustments. The complete procedure is as follows:

I. F. Adjustment

Set the signal generator for a signal of 456 KC.

Connect the output of the signal generator to the grid of the 1st detector through a 0.1 MF condenser.

Connect the ground lead of the receiver to the ground post of the signal generator.

Turn the band selector to the Range B position (standard wave band—purple dial color).

Turn the selectivity control to the sharp position and keep it in this position for all adjustments.

Turn the volume control to the maximum position

Attenuate the signal from the signal generator to prevent the leveling-off action of the A.V.C.

Then adjust the five I.F. trimmers until maximum output is obtained. The adjusting screws for these condensers are reached from the top of the chassis, and the location is shown in Fig. 5.

Range B Alignment

1730 KC Adjustment

Set the signal generator for 1730 KC.

Turn the rotor of the tuning condenser to the full open position.

Keep the band selector in the standard wave position.

Connect the antenna lead of the receiver through a 200 mmf. condenser to the output of the signal generator.

For this and all subsequent adjustments keep the volume control at the maximum position and attenuate the signal from the signal generator to prevent A.V.C. action.

Adjust the oscillator Range B trimmer (C38) until maximum output is obtained. The location of this trimmer is shown in Fig. 3.

1500 KC Adjustment

Set the signal generator for 1500 KC.

Turn the rotor of the tuning condenser carefully until maximum output is obtained.

Loosen the pointer set screw and set the large pointer at the 1500 KC mark on the standard wave band scale. Retighten the set screw.

Adjust the 1st and 2nd interstage Range B trimmers (C8 and C13) and antenna Range B trimmer (C2) to maximum.

Do not change the setting of the oscillator Range B trimmer.

600 KC Adjustment

Set the signal generator for 600 KC.

Turn the tuning condenser rotor until maximum output is obtained.

Turn the rotor slowly back and forth at the same time adjusting the 600 KC trimmer until the peak of greatest intensity is obtained. See Fig. 3 for location of this trimmer.

Be sure to use a non-metallic screwdriver for this adjustment.

Range C Alignment

5800 KC Adjustment

Set the signal generator for 5800 KC.

Connect the antenna lead of the receiver through a 400 ohm resistor to the output of the signal generator.

Turn the rotor of the tuning condenser to the full open position.

Turn the band selector to the Range C position (1st short wave band—green dial color).

As mentioned above, keep the volume control at the maximum position and attenuate the signal from the signal generator to prevent A.V.C. action.

Adjust the oscillator Range C trimmer (C40) until maximum output is obtained. See Fig. 3 for location of this trimmer.

5000 KC Adjustment

Set the signal generator for 5000 KC.

Turn the rotor of the tuning condenser carefully until maximum output is obtained.

Adjust the 1st and 2nd interstage Range C trimmers (C9 and C12) and antenna Range C trimmer (C3) to maximum.

Do not change the setting of the oscillator Range C trimmer.

Range D Alignment

18,300 KC Adjustment

Set the signal generator for 18,300 KC.

Keep the antenna lead of the receiver connected through the 400 ohm resistor to the output of the signal generator.

Turn the rotor of the tuning condenser to the full open position.

Turn the band selector to the Range D position (2nd short wave band—red dial color).

As mentioned above, keep the volume control at the maximum position and attenuate the signal from the signal generator to prevent A.V.C. action.

Adjust the oscillator Range D trimmer (C41) until maximum output is obtained. See Fig. 3 for location of this trimmer.

15,000 KC Adjustment

Set the signal generator for 15,000 KC.

Turn the rotor of the tuning condenser carefully until maximum output is obtained.

Adjust the 1st and 2nd interstage Range D trimmers (C10 and C11) and antenna Range D trimmer (C4) to maximum.

When adjusting the 2nd interstage Range D trimmer, it will be necessary at the same time to turn the tuning condenser rotor slowly back and forth until the peak of greatest intensity is obtained.

Then go back and repeat the procedure as given for the 18,300 KC adjustment. If it is found necessary to make any appreciable change in the setting of the oscillator Range D trimmer, the 15,000 KC adjustment must be repeated.

Do not make any further change in the setting of the oscillator Range D trimmer.

6000 KC Adjustment

Set the signal generator for 6000 KC.

Turn the tuning condenser rotor until maximum output is obtained.

Turn the rotor slowly back and forth at the same time adjusting the 6000 KC trimmer until the peak of greatest intensity is obtained. See Fig. 3 for location of this trimmer.

Use a non-metallic screwdriver for this adjustment.

Twenty-five Cycle Receivers

The twenty-five cycle receiver differs from the sixty cycle receiver only in the fact that a different power transformer is used. The correct power transformer is shown in the parts list.

The twenty-five cycle receiver can be operated satisfactorily from a sixty cycle power supply. However, the reverse is not true, the sixty cycle receiver cannot be operated from a twenty-five cycle power supply.

A 115-230 Volt, 40 to 60 cycle as well as other power transformers with special power ratings are also available for this model.

Servicing R. F. Coil Assemblies

The R. F. transformers and oscillator coil assemblies in this receiver are sold complete with can. This is due to the fact that the trimmers are soldered to the can, and cannot be easily disassembled.

The lead colors and resistances of the various winding in each assembly are shown in Fig. 4.

If it is ever necessary to remove one of these coil assemblies from the can, proceed as follows: First remove the nuts from the screws at the top of the can. The outside lug on the trimmer condenser is inserted in a slot in the coil can, and this lug is soldered into position.

Apply a soldering iron to the can at the point of the soldered connection. Then with a screw driver lift up on the outside edge of the trimmer (edge soldered to can) until the trimmer is clear of the can. After the trimmers are all unsoldered, the coil can be taken out.

Phonograph Connections

Phonograph connections can be made as shown in Fig. 7. The parts required to make this installation are shown in the parts list.

To mount the phono switch and phono jack, knockouts are provided in the back panel of the chassis as shown in Fig. 8.

The connections are made by opening the diode circuit at the volume control. Unsolder the condenser C24 from the lug on the volume control and reconnect this condenser to the new terminal strip provided (see parts list). This terminal strip should be secured to the inside of the front panel of the chassis base at a point near the volume control and should be soldered in position. From the terminal lug on the above strip, and from the volume control lug from which the condenser C24 was removed, connect leads to the phono switch on the rear panel of the chassis as shown in Fig. 7. Before connecting these two leads permanently to the switch, twist them together and enclose them in the shielded sleeving provided, being sure to ground the shielding at the extreme ends to the chassis base. At the point where the shielding passes the electrolytic condenser cover the cable with insulating tape. Complete the connections as shown in Fig. 7.

A high impedance phonograph pickup of good quality should be used. If a low impedance pickup is used, a step-up transformer will be required for sufficient volume. The volume control and tone control of the set will regulate the phono volume and tone.

MODEL 77-A
Schematic
Alignment, Parts

GAMBLE-SKOGMO, INC.

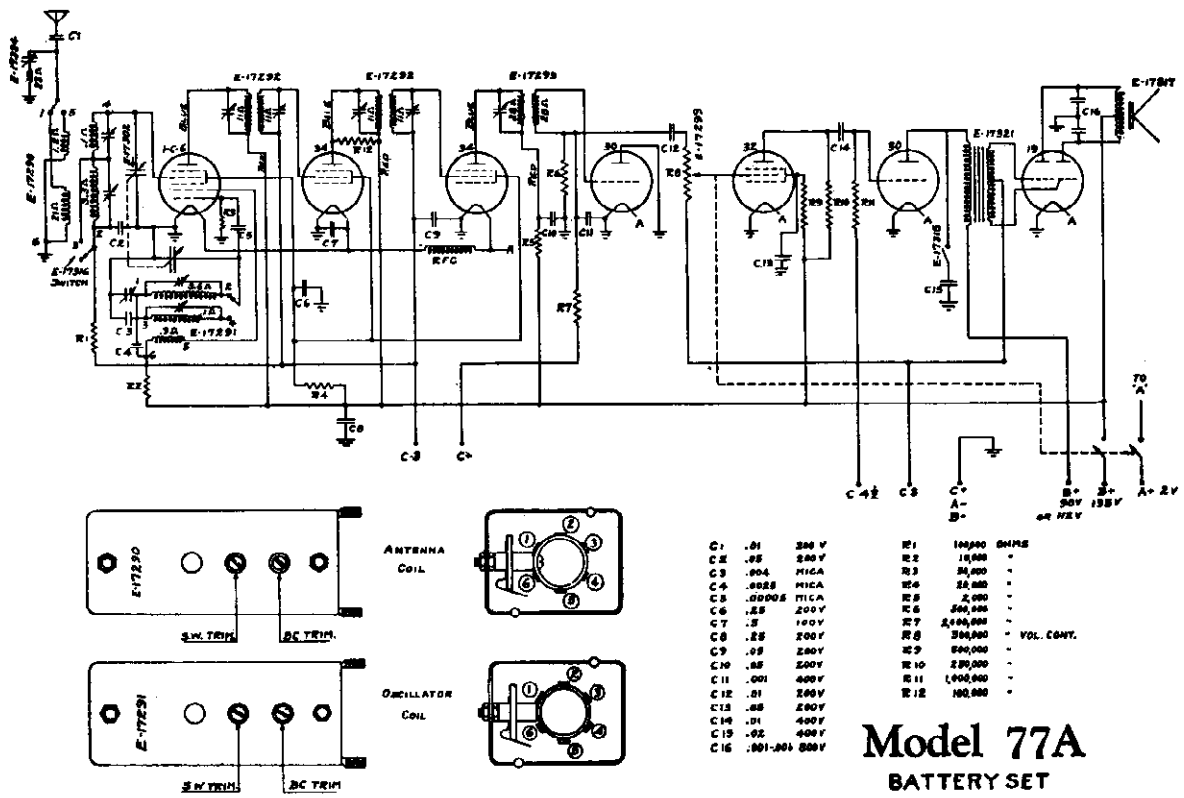

Model 77A

BATTERY SET

GENERAL Always eliminate all possible sources of trouble external to the receiver itself such as: Defective aerial, ground, or lightning arrestor, tubes, batteries, loud speakers.

TUBE FUNCTIONS "1-C-6" First detector—oscillator, "34" first I F amplifier, "34" second I F amplifier, "30" diode second detector, "32" first audio, "30" audio driver. "19" class B power tube.

CHECKING PARTS The resistance of coils and resistors is shown on the circuit diagram together with condenser capacities. Any defective part—either shorted or open—will result in either weak or distorted reception or none at all.

ALIGNMENT If all parts check OK and sensitivity is still low it is probably due to the set being out of alignment. It is necessary to use a reliable test oscillator or signal generator having accurate calibration and positive attenuation.

I F ALIGNMENT 456 K. C. Open tuning condenser (High Frequency dial setting). Connect signal generator to grid cap of 1-C-6 tube leaving present cap in place. Use a small condenser .002-.01 in series with signal generator lead wire. Adjust all five trimmers—two in top of each square I F transformer and the one in the top of the round (output) I F transformer. Go over these adjustments several times—it is best to use an output meter to indicate "peak". Reduce the output of the signal generator for final adjustments.

WAVE TRAP With the signal generator still on 456 K. C.—connect to antenna wire of set and adjust wave trap condenser to *minimum signal*.

The above will usually bring the set back to normal, check operation on stations and if satisfactory do not make any further adjustments.

BROADCAST BAND With the tuning condenser open and the signal generator set on 1735 K. C.—adjust B. C. Oscillator trimmer. Next—close tuning condenser and set signal generator to 540 K. C. adjust variable padding condenser for maximum signal. Adjust B. C. Antenna coil trimmer for maximum at 1400 K. C.

SHORT WAVE This is the most difficult for the service man and unless it is certain that the set does not compare favorably with a similar model under the same conditions of operation—the alignment should be left unchanged. If the service man feels that the short wave operation could be improved—proceed as follows: Connect signal generator to antenna and ground leads using a 300 ohm resistor in series with the antenna lead as a "dummy antenna". Set signal generator at 15,500 K. C. and tune in on the set (wave change switch in Short Wave position—left). Adjust S. W. oscillator trimmer—see diagram—using a fiber screw driver, move the point of response to the highest frequency setting possible on the dial or near the end of the 19 M. band. Then without moving the tuning dial turn the trimmer screw tighter and you should be able to find a second point of response (the image). Move trimmer back to "loose" position. If the image response cannot be found move the dial and readjust trimmer until it can be heard. Be sure to return to the "loose" or fundamental setting. Next adjust the S. W. antenna coil trimmer for best response retuning the dial at the same time. The low frequency end of the short wave band is fixed by the .004 mica padding condenser and will not change unless this condenser becomes defective.

ADDITIONAL NOTE The power output can be increased with only a slight increase in "B" current by increasing the 90 Volt connection to 112½ Volts. This increases the plate voltage on the driver tube.

PARTS PRICE LIST ON MODEL 77A CORONADO BATTERY TABLE RECEIVER

		List
E-17043	Bushing—Rubber—Cab. Mtg. (set of 6)	$ .90
E-17359	Cable—Battery with Terminals and Markers	1.00
E-17300	Cabinet	6.80
E-17301	Celluloid—for dial opening	.10
E-17299	Control—Volume	1.50
E-17290	Coil—Antenna	1.80
E-17291	Coil—Oscillator	1.60
E-17302	Condenser—Tuning	2.50
E-17071	Condenser—Paddler	.50
E-17093	Condenser—Mica .004	.30
E-17092	Condenser—Mica .002	.30
E-17091	Condenser—Mica .00005	.20
E-17303	Condenser—Tubular .5 Mfd. 100V	.40
E-17128	Condenser—Tubular .25 Mfd. 200V	.30
E-8661	Condenser—Tubular .03 Mfd. 200V	.20
E-8384	Condenser—Tubular .02 Mfd. 400V	.20
E-8877	Condenser—Tubular .01 Mfd. 200V	.20
E-8385	Condenser—Tubular .001 Mfd. 600V	.20
E-17304	Condenser—Tubular Dual .001 800V	.40
E-17349	Dial Scale and Frame	.50
E-17114	Knob—Tone, Vol., Wave Switch	.20
E-17113	Knob—Tuning	.20
E-17308	Pointer—Dial	.10
E-17105	Resistor—Carbon 2,000 Ohms	.20
E-17309	Resistor—Carbon 10,000 Ohms	.20
E-17310	Resistor—Carbon 20,000 Ohms	.20
E-8601	Resistor—Carbon 50,000 Ohms	.20
E-8885	Resistor—Carbon 100,000 Ohms	.20
E-8602	Resistor—Carbon 250,000 Ohms	.20
E-8886	Resistor—Carbon 500,000 Ohms	.20
E-8766	Resistor—Carbon 1,000,000 Ohms	.20
E-8887	Resistor—Carbon 2,000,000 Ohms	.20
E-17107	Shield—Tube 1-C-6	.30
E-17170	Shield—Tube 34	.30
E-17168	Socket 6 Prong Marked 1-C-6	.20
E-17166	Socket 4 Prong Marked 34	.20
E-17313	Socket 4 Prong Marked 30	.20
E-17165	Socket 4 Prong Marked 32	.20
E-17314	Socket 6 Prong Marked 19	.20
E-17315	Switch—Tone	.40
E-17316	Switch—Wave Change	.70
E-17317	Speaker—6½" Magnetic for Type "19"	5.50
E-17321	Transformer—Audio Driver	1.50
E-17292	Transformer—I. F. Input	1.50
E-17293	Transformer—I. F. Output	1.50
E-17294	Trap—Wave	1.20

PRICES ARE SUBJECT TO CHANGE WITHOUT NOTICE

Parts may be obtained from Service Department, Gamble Stores, Inc., Minneapolis, Minnesota.

©John F. Rider, Publisher

GAMBLE-SKOGMO, INC.

MODEL 26-B-5
Schematic, Socket
Parts, Power Unit

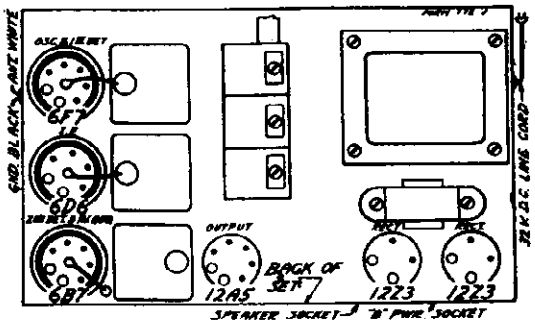

Fig. 2—Arrangement of Tubes

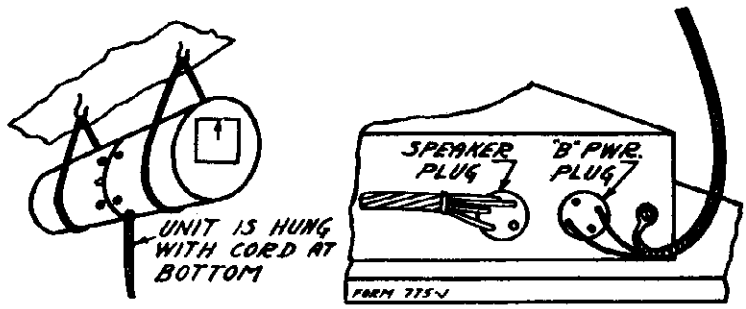

Fig. 3—Method of Installing "B" Power Unit

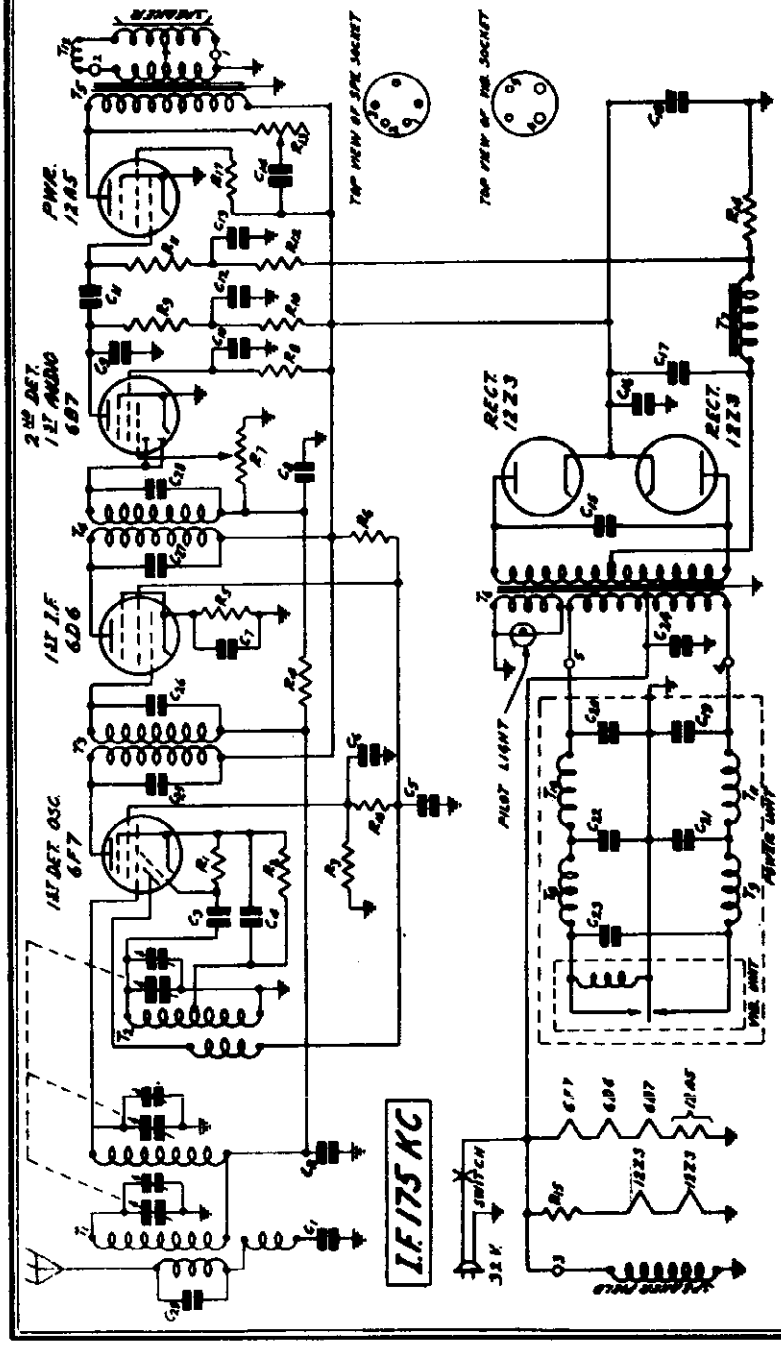

The numbers on the 2 sockets shown at the right above, correspond with the numbers as shown in the circuit.

Fig. 1—Schematic Circuit Diagram

CONDENSERS

Part No.	Code	Capacity	Voltage	Type
P-80662	C1	.05 Mf.	200V	Tubular
P-80662	C2	.05 Mf.	200V	"
P-81801	C3	.33 Mmf.		Wire Capacitor Part of Osc. Assem
P-80662	C4	.05 Mf.	200V	Tubular
P-80668	C5	.25 Mf.	200V	"
	C6	.05 Mf.	200V	"
P-81049	C7	.05 Mf.	200V	"
P-81811	C8	100 Mmf.		Wire Capacitor
P-81051	C9	.002 Mf.	600V	Tubular
P-80668	C10	.25 Mf.	200V	"
P-80672	C11	.01 Mf.	600V	"
P-80668	C12	.25 Mf.	200V	"
P-81062	C13	.01 Mf.	140V	"
P-81055	C14	.05 Mf.	400V	"
P-81052	C15	.015 Mf.	1600V	"
P-80687	C16	.10 Mf.	400V	"
	C17	8.0 Mf.	300V	Electrolytic Block
P-81016	C18	8.0 Mf.	300V	
P-80993	C24	.5 Mf.	140V	Tubular
P-81806	C25	70 Mmf.		Wire Capac. Part of 1st I.F.Assem.
P-81804	C26	45 Mmf.		Wire Capac. Part of 1st I.F.Assem.
P-81808	C27	90 Mmf.		Wire Capac. Part of 2nd I.F.Assem.
P-81810	C28	100 Mmf.		Wire Capac. Part of 2nd I.F.Assem
P-81812	C29	200 Mmf.	Wire Capac. Part of Ant. Assem.	

RESISTORS

Part No.	Code	Resistance	Wattage	Type
P-A95104	R1	100,000 Ohm	.2	Carbon
P-A95152	R2	1,500 Ohm	.2	Carbon
P-B94303	R3	30,000 Ohm	.5	Carbon
P-A96275	R4	2 Megohm	.2	Carbon
P- 98021	R5	400 Ohm	.2	Wire Wound
P-C93702	R6	7,000 Ohm	1.0	Carbon
P- 96014	R7	500,000 Ohm		Volume Control
P-B94204	R8	200,000 Ohm	.5	Carbon
P-B94603	R9	60,000 Ohm	.5	Carbon
P-A95203	R10	20,000 Ohm	.2	Carbon
P-A95504	R11	500,000 Ohm	.2	Carbon
P-A94104	R12	100,000 Ohm	.2	Carbon
P- 97011	R13	150,000 Ohm	.2	Tone Control
P- 98035	R14	450 Ohm	2.0	Wire Wound
P- 98034	R15	25 Ohm	3.0	Wire Wound
P-B95602	R16	6,000 Ohm	.5	Carbon

Oct, 1934

©John F. Rider, Publisher

MODEL 26-B-5
Alignment, Voltage
Resistance, Parts

GAMBLE-SKOGMO, INC.

VOLTAGES AT SOCKETS

Input 32 Volts—Antenna Shorted to Ground

Type of Tube	Function	Across Filament	Plate to Cathode	Screen to Cathode	Grid to Cathode	Normal Plate M.A.
6F7	1st Det. & Osc.	6.3	167(1)	90	2.6	7.0(1)
			117(2)		0	2.8(2)
6D6	I. F.	6.3	172	120	3.2	8.2
6B7	2nd Det.	6.3	25	25	7.25	2.0
12A5	Output	12.6	180	180	25	32
12Z3	Rectifier	12.6	225			25

(1) Pentode Section of Tube

(2) Triode Section of Tube

REPAIR PARTS LIST FOR 6 TUBE, 32 VOLT D. C. RECEIVER

When ordering parts be sure and give the part number. Also give the series number which will be found in the License Notice label. If there is a spot of paint on the chassis, give this color.

MISCELLANEOUS

Part No.	ITEM
P-5200	Antenna Transformer Assembly less Can
P-40433	Can for Above Assembly
P-5202	Oscillator Coil and Can Assembly
P-5221	1st I. F. Coil and Can Assembly
P-5203	2nd I. F. Coil and Can Assembly
P-50626	Power Transformer
P-50624A	6B Output Transformer
P-50637	"B" Filter Reactor
P-1885	6D6 Tube Socket
P-1944	6B7 Tube Socket
P-1945	6F7 Tube Socket
P-1946	12A5 Tube Socket
P-2020	12Z3 Tube Socket
P-1637	Speaker Socket
P-2060	Knob, Small
P-2062	Knob, Large
P-10272	Rubber Chassis Cushions
P-40445	Tube Shield
P-40443	Tube Shield Base
P-10320	Glass Crystal
P-20875	Crystal Retainer Ring
P-1421	Single Lug Mtg.
P-2130	Double Insulated Mtg. Lug
P-27912	Large Double End Pointer
P-10337	Celluloid Indicator Disc
P-30342	Grid Cap Only
P-70702	115 Volt Line and Plug Assembly
P-70703	Antenna and Ground Wires
P-2012	Pilot Light Bulbs (6.8 volts)
P-2147	Speaker 6" Mantel
P-2173	Speaker 8" Console
P-10347	Rubber Grommet (Small Gang Con. Mtg.)
P-10296	Rubber Grommet (Large)

"B" POWER UNIT PARTS

P-70770	Shield Cable and Plug
P-40439	Vibrator Shield Can
P-2153	Vibrator Unit
P-5172	R. F. Choke Coils
P-2021	Vibrator Socket
P-10349	Rubber Band (For Mtg. Vib.)
P-20926	Screw Hook (For Mtg. Vib.)
P-81101	C19 .01 Mf. 400V Tubular Condenser
P-81101	C20 .01 Mf. 400V Tubular Condenser
P-80888	C21 .25 Mf. 200V Tubular Condenser
P-80888	C22 .25 Mf. 200V Tubular Condenser
P-81054	C23 .5 Mf. 140V Tubular Condenser

INTERFERENCE ELIMINATION PARTS

Part No.	
P-91011	Spark Plug Suppressor
P-80932	Dual .5 Mfd. Generator Condenser

D. C. RESISTANCE OF WINDINGS

Following are the D. C. resistances of the various windings in the chassis. The values given below will vary slightly in different sets.

Part No.	Item	Code	D. C. Resistance in Ohms
P-5200	Primaries of Antenna Trans. in Series	T1	Small
	1st Secondary of Antenna Transformer	T1	3.2
	2nd Secondary of Antenna Transformer	T1	2.4
P-5202	Oscillator Plate Coil	T2	2.0
	Oscillator Grid Coil	T2	3.5
P-5221	1st I. F. Transformer Primary	T3	67
	1st I. F. Transformer Secondary	T3	93
P-5203	2nd I. F. Transformer Primary	T4	63
	2nd I. F. Transformer Secondary	T4	65
P-50624	Output Transformer Primary	T5	243
	Output Transformer Secondary and Bucking Coil in Series	T5 & L12	Small
P-50637	"B" Filter Reactor	L7	300
P-2147	Speaker Field		97
P-2173	Speaker Voice Coil		Small
P-50626	Power Transformer Primary	T6	
	Center Tap to Inside	T6	3.6
	Center Tap to Outside	T6	4.4
	Power Transformer H. V. Secondary	T6	
	Center Tap to Inside	T6	322
	Center Tap to Outside	T6	350
	Power Transformer Pilot Lamp Sec.	T6	.3
P-2153	Vibrator Unit Magnetizing Coil		1025
	Vibrator Unit Filter Chokes		3.0

Condenser Alignment

Misalignment or mistracking of condensers generally manifests itself as broad tuning and lack of volume at portions or all of the broadcast band. The receivers are all properly aligned at the factory with precision instruments and realignment should not be attempted unless all other possible causes of the faulty operation have first been investigated and unless the service technician has the proper equipment. A signal generator that will provide accurately calibrated signals over the broadcast band and at the intermediate frequency, and an output meter are required for indicating the effect of adjustments.

First set the signal generator for 1730 K. C. Turn the rotor to the full open position. The antenna lead from the signal generator adjustment is connected to the antenna lead of the receiver. Adjust the trimmer of the oscillator section of the 3 gang condenser until maximum output is obtained. The oscillator section is the one with the cut plate rotor.

Now set the signal generator for 1400 K. C. and turn the rotor until maximum output is obtained. Adjust the other two trimmers on the gang condenser for maximum output.

To obtain dial scale calibration tune in an 800 K. C. signal and set the dial pointer at that mark on the dial scale. When calibrated in this manner, the setting will be approximately correct at both ends of the scale.

The use of the cut plate type of condenser eliminates the necessity of a 600 K. C. padder and no adjustment at this frequency, therefore, is required.

Servicing Power Unit

Vibrator Unit

The vibrator is mounted inside the "B" power unit. Normally the vibrator will last upward of 1000 hours. However, in the same manner as a tube it may become defective in less time and require replacement.

If the tubes light and by touching the power unit case, no vibration is felt, then the vibrator unit is probably not operating. If the pilot lamp is not lighted this will be a further indication of the same fact.

To replace the vibrator unit in the power supply remove the end of the case on which the label is placed by taking out the four screws which hold the vibrator shield can to the framework. The old vibrator may then be withdrawn and a new unit inserted in the same manner as a tube.

One or more of the vibrator units should be kept on hand for replacement purposes. It is advisable when servicing the receiver, to try one out in the same manner as a new set of tubes would be tried.

©John F. Rider, Publisher

GAMBLE-SKOGMO, INC.

MODEL 26-FM-552
R-F Chassis
Schematic

Power Consumption - - - - - - - 290 Watts
(At 115 Volts 60 Cycles)

Power Output - - - - - 30 Watts Undistorted

Sensitivity

B Range Average - - - 0.5 Microvolts Absolute
C Range Average - - - 1.0 Microvolts Absolute
D Range Average - - - 2.0 Microvolts Absolute
E Range Average - - - 40.0 Microvolts Absolute

Selectivity - 20 KC Broad at 1000 Times Signal (Sharp)

Intermediate Frequency - - - - - - - 456 KC

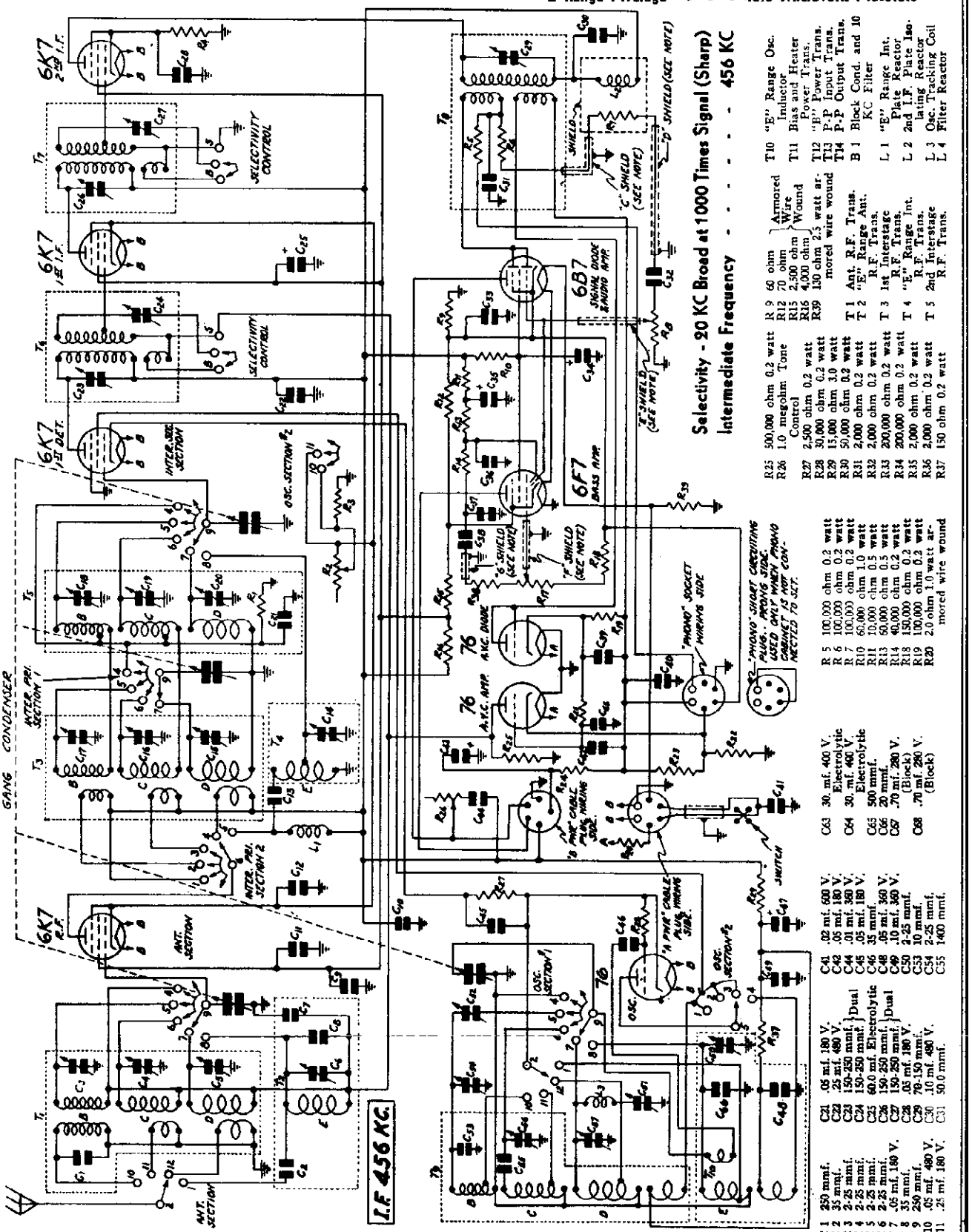

R 1	250,000 ohm 0.2 watt																		
R 2	1.0 megohm Tone Control																		
R 3	2,500 ohm 0.2 watt																		
R 4	30,000 ohm 0.2 watt																		
R 5	100,000 ohm 0.2 watt																		
R 6	100,000 ohm 0.2 watt																		
R 7	100,000 ohm 0.2 watt																		
R 8	60,000 ohm 1.0 watt																		
R 9	60 ohm	Armored Wire Wound																	
R12	70 ohm																		
R15	2,500 ohm																		
R16	4,000 ohm																		
R39	130 ohm 2.5 watt armored wire wound																		
T 1	Ant. R.F. Trans.																		
T 2	"E" Range Ant. R.F. Trans.																		
T 3	1st Interstage R.F. Trans.																		
T 4	"E" Range Int. R.F. Trans.																		
T 5	2nd Interstage R.F. Trans.																		
T10	"E" Range Osc. Inductor																		
T11	Bias and Heater Power Trans.																		
T12	"B" Power Trans.																		
T13	P-P Input Trans.																		
T14	P-P Output Trans.																		
B 1	Block Cond. and 10 KC Filter																		
L 1	"E" Range Int. Plate Reactor																		
L 2	2nd I.F. Plate Isolating Reactor																		
L 3	Osc. Tracking Coil																		
L 4	Filter Reactor																		

R25	500,000 ohm 0.2 watt																		
R26	1.0 megohm Tone Control																		
R27	2,500 ohm 0.2 watt																		
R28	30,000 ohm 0.2 watt																		
R29	15,000 ohm 3.0 watt																		
R30	50,000 ohm 0.2 watt																		
R31	2,000 ohm 0.2 watt																		
R32	2,000 ohm 0.2 watt																		
R33	200,000 ohm 0.2 watt																		
R34	200,000 ohm 0.2 watt																		
R35	2,000 ohm 0.2 watt																		
R36	2,000 ohm 0.2 watt																		
R37	150 ohm 0.2 watt																		
R 5	100,000 ohm 0.2 watt																		
R 6	100,000 ohm 0.2 watt																		
R 7	100,000 ohm 0.2 watt																		
R10	60,000 ohm 1.0 watt																		
R11	10,000 ohm 0.5 watt																		
R13	60,000 ohm 0.5 watt																		
R14	40,000 ohm 0.2 watt																		
R18	150,000 ohm 0.2 watt																		
R19	100,000 ohm 0.2 watt																		
R20	2.0 ohm 1.0 watt armored wire wound																		

C 1	250 mmf.	C21	.05 mf. 180 V.	C41	.02 mf. 600 V.	C63	30. mf. 400 V. Electrolytic												
C 2	35 mmf.	C22	.25 mf. 480 V.	C42	.05 mf. 180 V.	C64	30. mf. 400 V. Electrolytic												
C 3	2-25 mmf.	C23	150-250 mmf. Dual	C44	.01 mf. 360 V.	C65	500 mmf.												
C 4	2-25 mmf.	C24	150-250 mmf. Dual	C45	.05 mf. 180 V.	C66	20 mmf.												
C 5	2-25 mmf.	C25	60.0 mf. Electrolytic	C46	35 mmf.	C67	.70 mf. 280 V. (Block)												
C 6	2-25 mmf.	C26	150-250 mmf. Dual	C48	.05 mf. 360 V.	C68	.70 mf. 280 V. (Block)												
C 7	.05 mf. 180 V.	C27	150-250 mmf. Dual	C49	.10 mf. 360 V.														
C 8	35 mmf.	C28	.03 mf. 180 V.	C50	2-25 mmf.														
C 9	250 mmf.	C29	70-150 mmf.	C53	10 mmf.														
C10	.05 mf. 480 V.	C30	.10 mf. 480 V.	C54	2-25 mmf.														
C11	.25 mf. 180 V.	C31	50.0 mmf.	C55	1400 mmf.														

©John F. Rider, Publisher

MODEL 26-FM-552
A-F.& Power Unit
Schematic

GAMBLE-SKOGMO, INC.

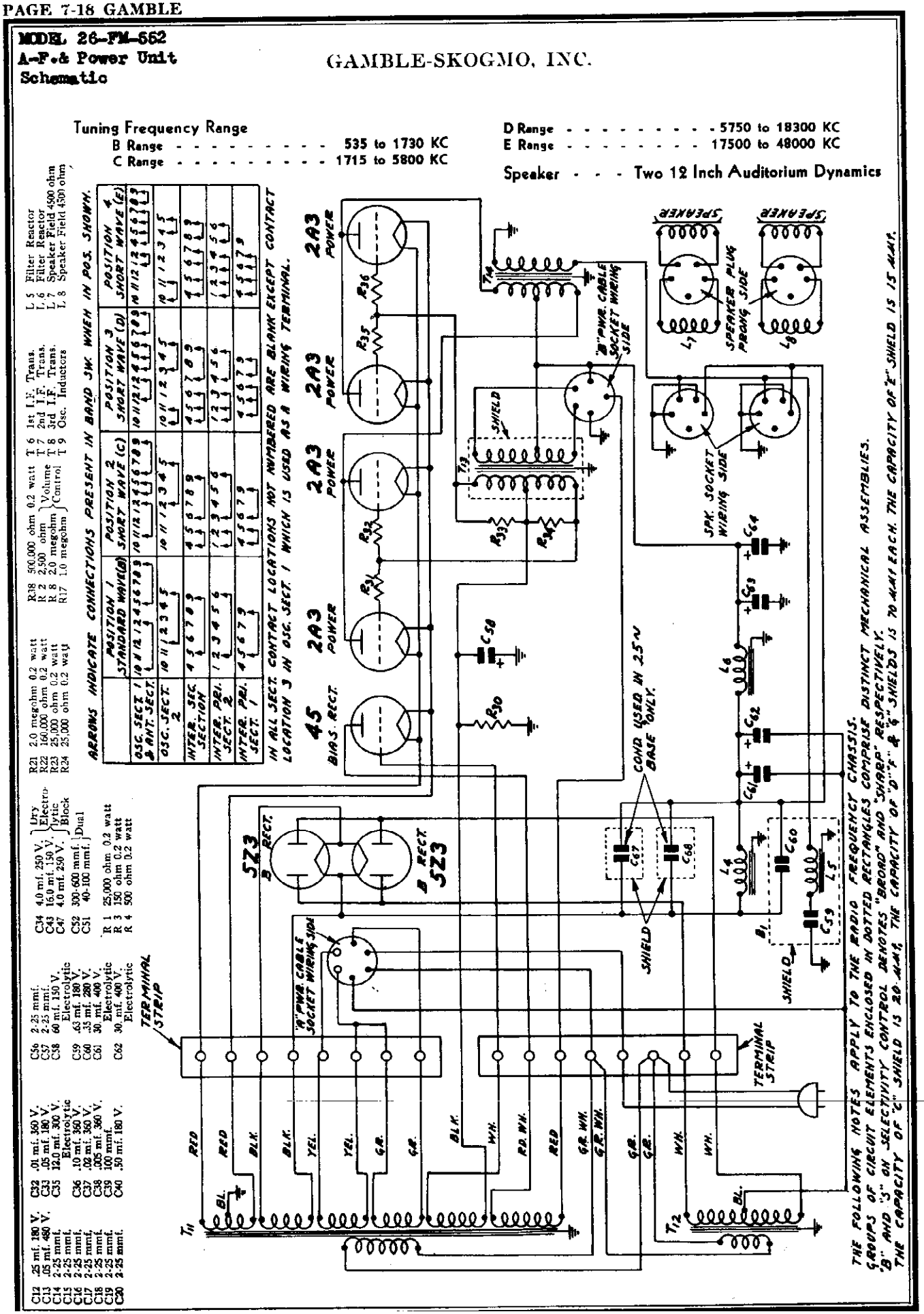

©John F. Rider, Publisher

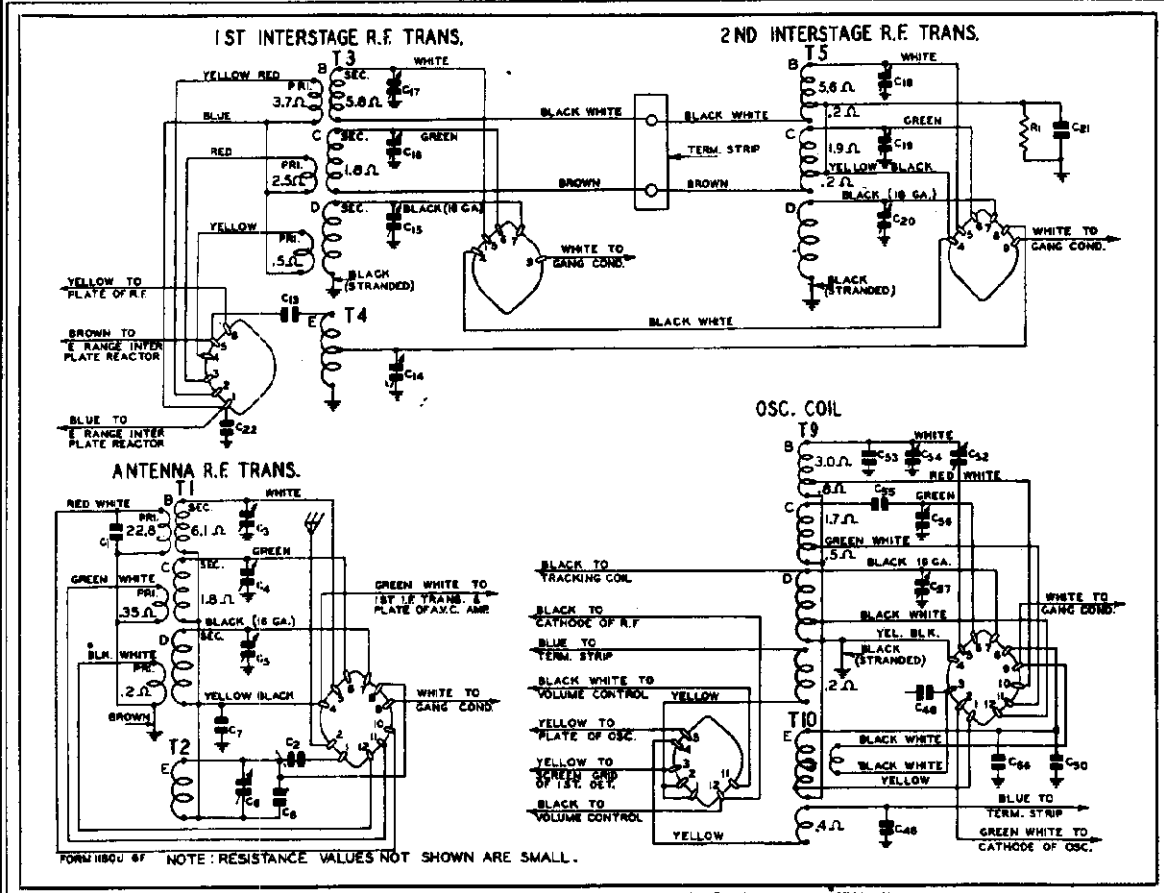

Fig. 12—Color Coding of Coil Wires and D. C. Resistances of Windings

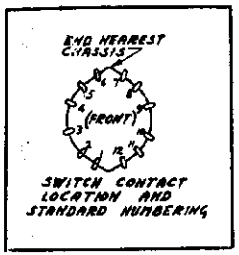

Fig. 9—Numbering of Switch Contacts

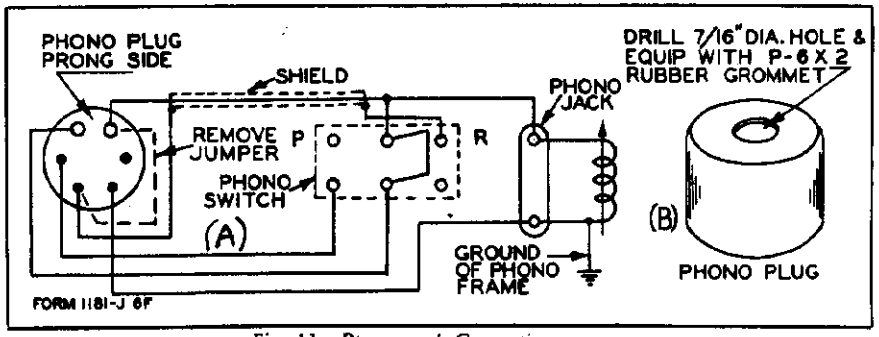

Fig. 13—Phonograph Connections

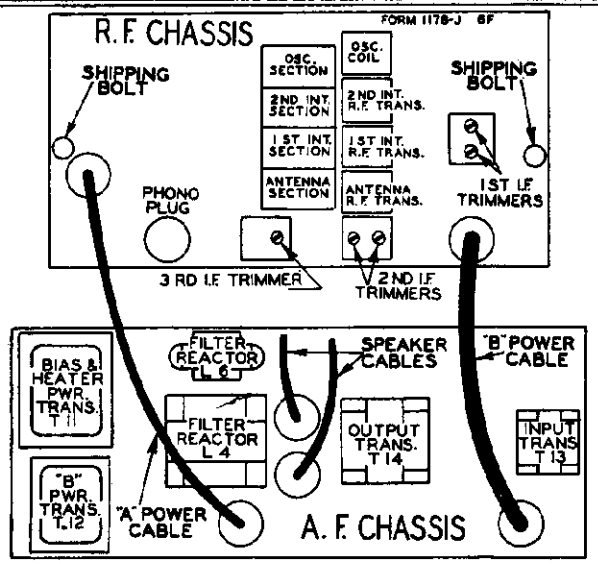

Fig. 4—Top View of Chassis Showing Location of Units

Changes in Early Models

In the early models condenser C65, shown in the R.F. Schematic Fig. 2, was not used. A 20 mmf. condenser, also designated as C65, was connected in parallel with condenser C14.

Condenser C10 from B+ to ground was not used in early models. Another condenser in the early models, also designated as C10 and 250 mmf. in value, was connected from the A.V.C. amplifier plate to ground.

Resistor R38 was not used in early models.

On the A.F. chassis the speaker sockets were wired with ground to the opposite side of voice coil.

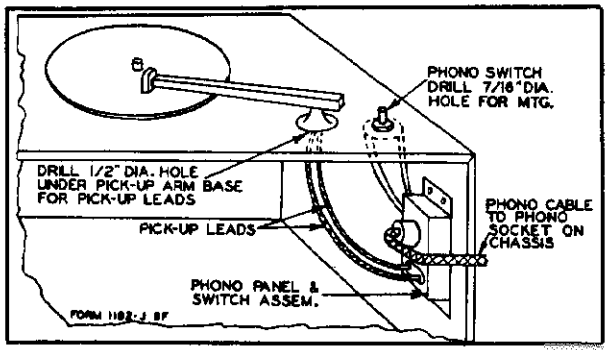

Fig. 14—Phonograph Connections Using Phono Cable and Panel Assembly

MODEL 26-FM-552
Chassis Views

GAMBLE-SKOGMO, INC.

Voltage, Trimmers
Switch Data

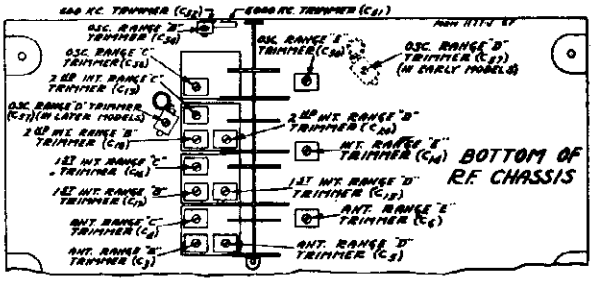

Fig. 6—Trimmer Location

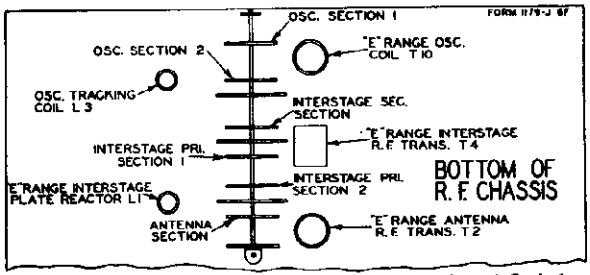

Fig. 5—Bottom View of Chassis Showing Coil and Switch Section Location

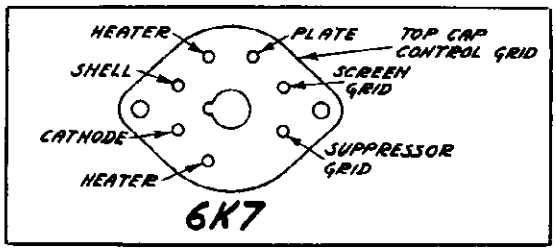

Fig. 7—Bottom View of Metal Tube Socket

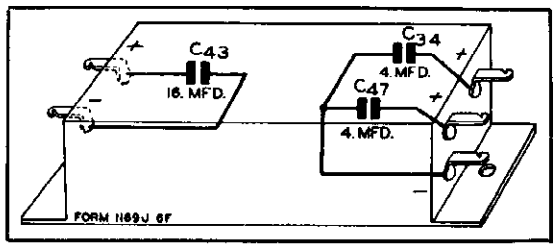

Fig. 8—Condenser Block Internal Wiring

VOLTAGES AT SOCKETS
Antenna Shorted to Ground - Line Voltage 110
Volume Control Maximum

Tube	Function	Across Heater	Plate to Ground	Screen to Ground	Cathode to Ground	Cathode M. A.
6K7	R. F.	5.8	300	110	4.1	10.5
6K7	1st Det.	5.8	300	142	10.0	3.5
76	Osc.	5.8	142			10.0
6K7	1st I. F.	5.8	300	110	4.1	10.5
6K7	2nd I. F.	5.8	300	110	3.7	10.0
6B7	Sig. Diode & Audio Amp.	5.8(1) 5.6(2)	300	115	3.6	4.5
6F7	Bass Amp.	5.8(1) 5.6(2)	275(3) 125(4)	115	7.2	9.0
76	A.V.C. Diode	4.9				
76	A.V.C. Amp.	4.9	0		-62.0	
2A3	Power	2.35	300		60(5)	60.0(6)
523	'B' Rect.	4.8				375.0(7)
45	Bias Rect.	2.4				

(1) Measured with A. C. Voltmeter—early models with letter "A" under chassis.
(2) Measured with D. C. Voltmeter—later models with letter "B" under chassis.
(3) Pentode Plate
(4) Triode Plate
(5) Control Grid to ground.
(6) Each Side of push-pull Circuit—120 Ma. total for 4 tubes.
(7) Total for both tubes—Milliameter in series with 1st Choke.

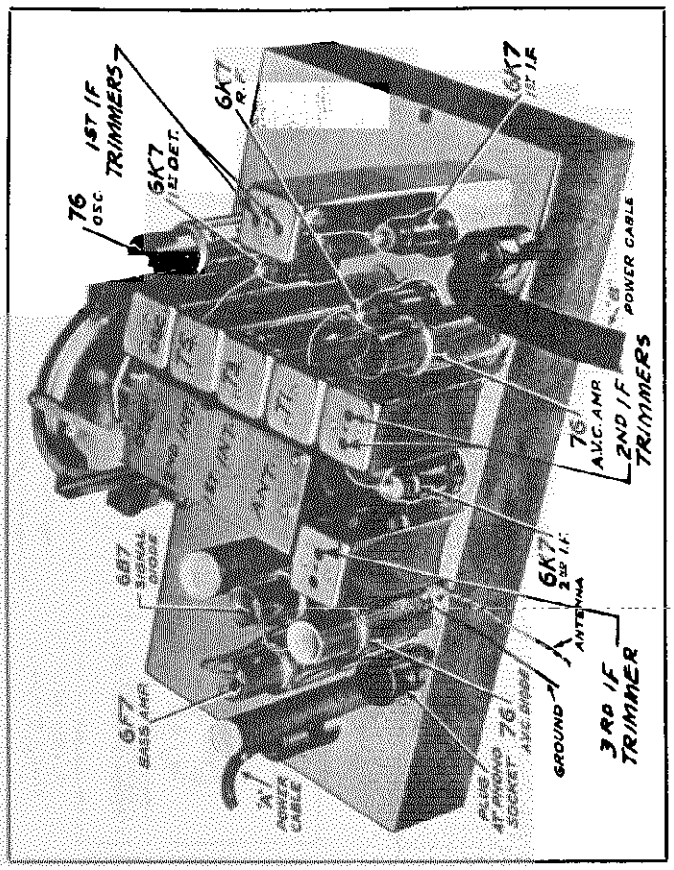

Fig. 10—Tube Arrangement in R.F. Chassis

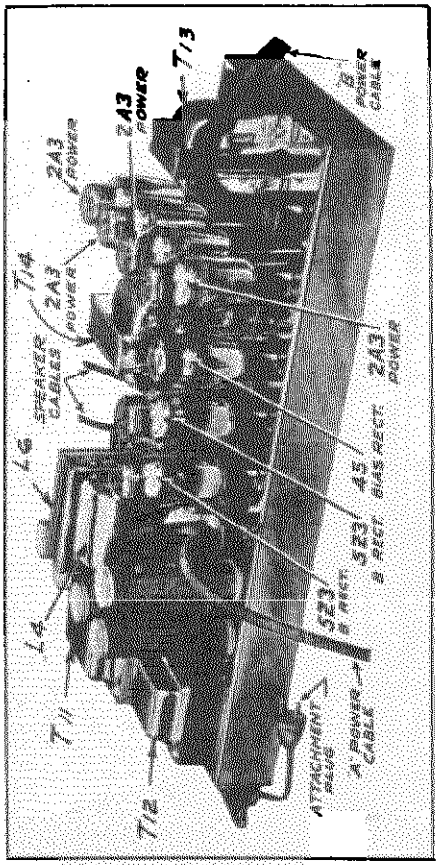

Fig. 11—Tube Arrangement in A.F. Chassis

©John F. Rider Publisher

GAMBLE-SKOGMO, INC.

MODEL 26-FM-552
Circuit Data
Alignment,
Phono-Data

Circuit

This model is a four band receiver with a tuning range in each band as shown in the specifications above. Four band coverage is accomplished by means of four sets of antenna, interstage and oscillator coils and a six section four position switch.

Among the many features incorporated in this receiver are: Improved Automatic Volume Control, Adjustable Selectivity Control, Dual Volume and Sensitivity Control, Bass Compensator and a 30 Watt High Fidelity Audio Amplifier. These are discussed in the following circuit description.

Referring to the R.F. Schematic Fig. 2, the following are the code numbers of the R.F. and Oscillator Assemblies:

T1 —Antenna R.F. Transformer
T2 —B Range Antenna R.F. Transformer
T3 —1st Interstage R.F. Transformer
T4 —B Range Interstage R.F. Transformer
T5 —2nd Interstage R.F. Transformer
T9 —Oscillator Inductors
T10—B Range Oscillator Inductors

The standard wave, 1st, 2nd and 3rd short wave coils in each assembly are indicated by the letters B, C, D and E, respectively. The six sections of the band switch are designated in the R.F. schematic Fig. 2 and in Fig. 5 as the antenna section, interstage primary section 2, interstage primary section 1, interstage secondary section, oscillator section 2 and oscillator section 1.

The band switch completes connections to the coils in use. It also short circuits the antenna R.F. transformer secondaries, the interstage transformer primaries and secondaries and the oscillator coils of lower frequency, not in use.

The antenna transformer with tuned secondary feeds into a type 6K7 R.F. amplifier tube. The output of this tube is fed into a double tuned R.F. stage. The output of the latter actuates the control grid of a 6K7 tube which functions as the 1st detector.

A separate type 76 tube is employed in the oscillator circuit. The oscillating circuit is always reasonant at a frequency which is 456 KC above the frequency to which the R.F. amplifier is tuned.

The oscillator potential is fed into the cathode circuit of the 6K7 first detector tube. As a result of the beating of the two frequencies, the intermediate or beat frequency of 456 KC is present in the plate circuit of this tube.

Two stages of I.F. amplification are employed using 6K7 tubes. The primaries and secondaries of the first and second I.F. transformers and the primary of the 3rd I.F. transformer are tuned by small trimmer condensers.

Referring to the 1st and 2nd I.F. transformers T6 and T7 in Fig. 2, it will be noted that there are coupling windings below the primaries.

When the selectivity control is in the sharp position, the coupling winding is open circuited and the loose coupling which exists between the primary and secondary of this transformer results in high selectivity. When the selectivity control is in the broad position, the coupling winding which is wound under the primary is connected in series with the secondary. This provides overcoupling which results in a greatly widened resonance curve. Passage of a wide range of audio frequencies is thus obtained.

A dual manual volume control is employed. In one section the audio voltage applied to the 1st audio tube is varied (R8). In the other section the R.F. and 1st I.F. bias is varied (R2). The purpose of the latter section is to reduce the sensitivity of the receiver at low volume settings in order to cut down noise pick-up between stations. The variable section R2 is shorted out by the band selector switch when it is in the Range D and E positions.

The 3rd I.F. transformer has 2 secondary windings. One of these windings works into the diode section of the 6B7 signal diode. The other winding works into the 76 A.V.C. diode.

The audio voltage developed by the signal diode across volume control resistor R8 is transmitted through the movable arm to the control grid of the pentode section of the 6B7 tube, which acts as a one stage audio amplifier. The pentode plate of this tube is connected through the "B" power cable to one side of the primary of the push-pull input transformer in the power stage.

The audio voltage developed across volume control resistor R8 is also applied through the movable arm to the control grid of the triode section of the 6F7 bass amplifier. A resistance capacity filter composed of condensers C36 and C37 and resistor R14 in the triode plate circuit of this tube bypasses the higher audio frequencies. The lower audio frequencies which pass through this filter develop a voltage across resistors R38, R17 and R18.

R17 is the bass note control and is connected mechanically to the manual volume control. The movable arm is connected to and applies the bass audio voltage to the control grid of the pentode section of the 6F7 bass amplifier. At high volume settings the movable arm is at the low potential end of R17 (near R18). At low volume settings it is at the other end of this resistor in order to increase the bass note response. The reason for the increase in low note response is that the characteristics of the ear are such that the low notes are not heard as well as the middle register notes at lower volume levels.

The plate of the pentode section of the 6F7 tube is connected through the "B" power cable to the other side of the primary of the push-pull input transformer.

The A.V.C. system used in this receiver is one which has a flat characteristic over an extremely wide input range. As mentioned above, it will be seen in Fig. 2 that one of the 3rd I.F. transformer secondary windings works into the 76 A.V.C. diode tube. A signal passing through this transformer will result in a voltage across diode resistor R19. This voltage is applied to the control grid of the 76 A.V.C. amplifier.

Referring now to Figs. 2 and 3, there is a diode circuit consisting of the A.V.C. amplifier voltage winding of power transformer T11 (sixth winding from top) the plate and cathode elements of the 45 bias rectifier tube and resistors R22, R23 and R24. The diode current flowing in this circuit establishes a drop across these resistors. This voltage is below ground and furnishes operating voltages for the 76 A.V.C. amplifier tube which functions as a DC amplifier. Under no signal conditions, the plate of this tube is at ground potential. The grid is at the voltage of the maximum negative voltage end of resistor R23 while the cathode is at the minimum negative voltage end of this resistor. The resulting bias voltage brings this tube below the cut-off point and no plate current flows.

When a signal of a predetermined value or greater flows in the 3rd I.F. transformer, the voltage established across diode resistor R19 reduces the bias voltage of the A.V.C. amplifier to the point at which plate current flows in this tube. The plate current establishes a drop in resistor R22, lowering the plate voltage by the amount of this drop. The plate of the A.V.C. amplifier tube is connected to the control grid circuits of the R.F and 1st I.F. tubes, resulting in A.V.C. action.

The ouput stage employs four type 2A3 tubes arranged in push-pull parallel. Fixed bias voltage for these tubes is obtained from a diode circuit in which are the output bias winding of power transformer T11 (fifth winding from top) and the grid and cathode elements of the type 45 bias rectifier tube. 30 watts of undistorted output may be obtained. Two 12" auditorium type dynamic speakers are used. Each speaker is provided with deflecting vanes for the purpose of spreading the directional higher audio notes through the entire room.

Two type 5Z3 tubes connected in parallel are used as "B" power rectifiers in the power unit. There are 2 power transformer assemblies, T11 and T12. In assembly T11 the top 4 windings illustrated in Fig. 3 supply the tube heater and filament voltages and the pilot lamp voltages. As mentioned, the fifth winding supplies the output stage bias voltage and the sixth winding supplies the A.V.C. amplifier tube voltages. Assembly T12 supplies the "B" voltage.

To reduce hum, DC is used in the heater circuits of the 6P7 and 6B7 tubes. The 2 heaters are connected in series in the negative "B" line.

The 45 bias rectifier tube, mention of which has already been made, has two functions. The cathode and grid elements act as a diode supplying bias voltage for the output tubes. The cathode and plate elements act as a diode supplying operating voltages for the A.V.C. amplifier. The two associated transformer windings must be in phase and wired as per the color code in the A.P. Schematic, Fig. 3.

The phono short circuiting plug, which is in the phono socket completes the signal diode circuit connections. Phonograph circuit connections are explained in the article under that name in this manual.

Metal Tubes

One type of the new metal tubes is used in this receiver, namely the 6K7. This replaces the type 6D6 glass tube. This metal tube operates at the same voltages and is nearly identical in characteristics to the corresponding glass tube which it replaces. In Fig. 7 are shown the metal tube pin positions from a bottom socket view.

The shells of metal tubes get quite hot and users should be cautioned against touching them.

Phonograph Connections

A phonograph socket is provided on the R.F. chassis by means of which phonograph connections can be made without electrical changes in the chassis. The receiver is shipped from the factory with a plug in this socket. If no phonograph is used this plug must be inserted as it completes the signal diode circuit for radio reception.

Two sets of accessories are supplied for phonograph connections for this model. One set is used when the phonograph is contained in a separate cabinet, and the other set is used when the phonograph and radio are in a combination cabinet. The electrical connections are the same in both cases and are illustrated in Fig. 13 (A). Parts required in either case are shown in the parts list in this manual.

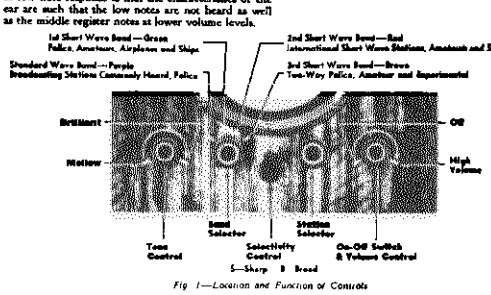

Fig. 1—Location and Function of Controls

Phonograph in Separate Cabinet

For this assembly, a 5 conductor cable and a small metal panel assembly are supplied. This assembly has the radio-phono switch, tip jacks for pick-up leads and terminal plate for phono cable.

The phono panel is mounted at the most convenient place in the cabinet at which connections can be completed. The switch is secured to the motor board as illustrated in Fig. 14.

The socket at the end of the cable is secured to the terminal plate on the panel and the plug at the other end of the cable is inserted into the phono socket on the R.F. chassis.

When the switch is thrown to the radio side, the phono pick-up is excluded from the signal diode circuit. When it is thrown to the phono side, the signal diode circuit is opened and the phonograph connections completed to this circuit. Resistor R33 is short circuited. This brings the grid and cathode of the 76 A.V.C. amplifier to the same potential and causes a plate current in this tube of sufficient intensity to bring the R.F. and 1st I.F. tubes to the point of cut off (See article on circuit for further information regarding operation of A.V.C. system).

Phonograph and Radio in Combination Cabinet

For this assembly, a number of separate items as shown in the parts list are supplied. The phono short circuiting plug supplied with the receiver is used after certain changes have been made.

First take off the shell of this plug by twisting the shell in either direction. The shell is then drilled and equipped with a rubber grommet as shown in Fig. 13 (B). Next unsolder and remove the jumper wire from the plug as shown in Fig. 13 (A). Extend the leads through the hole in the shell and solder the leads to the prongs on the plug as illustrated. Complete the connections to the switch and tip jacks as shown. The switch is mounted on the motor board and the tip jacks at the nearest convenient place.

The description of the connections as given for the separate phonograph cabinet also applies to the combination.

Alignment and Calibration

Correct alignment is extremely important in connection with all-wave receivers. The receivers are all properly aligned at the factory with precision instruments and realignment should not be attempted unless all other possible causes of the faulty operation have first been investigated and unless the service technician has the proper equipment.

A signal generator that will provide an accurately calibrated signal at 456, 1730, 1500, 600, 1800, 5000, 18,300, 15,000, 6000, 48,000 and 40,000 KC and an output indicating meter are required. It will be practically impossible to align the receiver if unsatisfactory apparatus is used. If a station is tuned in with the selectivity control in the broad position and this control is then turned to the sharp position, the station may disappear. This is not an indication that the receiver is out of alignment.

Use a non-metallic screwdriver for the adjustments. The complete procedure is as follows:

I. F. Adjustment

Set the signal generator for a signal of 456 KC.

Connect the output of the signal generator to the grid of the 1st detector through a 0.1 mf. condenser.

Connect the ground lead of the receiver to the ground post of the signal generator.

Turn the band selector to the Range B position (standard wave band—purple dial color).

Turn the selectivity control to the sharp position and keep it in this position for all adjustments.

Turn the volume control to the maximum position.

Attenuate the signal from the signal generator to prevent the levelling-off action of the A.V.C.

Then adjust the five I.F. trimmers until maximum output is obtained. The adjusting screws for these condensers are reached from the top of the chassis, and the location is shown in Fig. 4.

Range B Alignment

1730 KC Adjustment

Set the signal generator for 1730 KC.

Turn the rotor of the tuning condenser to the full open position.

Keep the band selector in the standard wave position.

Connect the antenna lead of the receiver through a 200 mmf. condenser to the output of the signal generator.

For this and all subsequent adjustments keep the volume control at the maximum position and attenuate the signal from the signal generator to prevent A.V.C. action.

Adjust the oscillator Range B trimmer (C74) until maximum output is obtained. The location of this trimmer is shown in Fig. 6.

1500 KC Adjustment

Set the signal generator for 1500 KC.

Turn the rotor of the tuning condenser carefully until maximum output is obtained.

Loosen the pointer set screw and set the large pointer at the 1500 KC mark on the standard wave band scale. Re-tighten the set screw.

Adjust the 1st and 2nd interstage Range B trimmers (C17 and C18) and antenna Range B trimmer (C1) to maximum.

Do not change the setting of the oscillator Range B trimmer.

600 KC Adjustment

Set the signal generator for 600 KC.

Turn the tuning condenser rotor until maximum output is obtained.

Turn the rotor slowly back and forth at the same time adjusting the 600 KC trimmer until the peak of greatest intensity is obtained. See Fig. 6 for location of this trimmer.

Be sure to use a non-metallic screwdriver for this adjustment.

Range C Alignment

5800 KC Adjustment

Set the signal generator for 5800 KC.

Connect the antenna lead of the receiver through a 400 ohm resistor to the output of the signal generator.

Turn the rotor of the tuning condenser to the full open position.

Turn the band selector to the Range C position (1st short wave band—green dial color).

As mentioned above, keep the volume control at the maximum position and attenuate the signal from the signal generator to prevent A.V.C. action.

Adjust the oscillator Range C trimmer (C56) until maximum output is obtained. See Fig. 6 for location of this trimmer.

5000 KC Adjustment

Set the signal generator for 5000 KC.

Turn the rotor of the tuning condenser carefully until maximum output is obtained.

Adjust the 1st and 2nd interstage Range C trimmers (C16 and C19) and antenna Range C trimmer (C4) to maximum.

Do not change the setting of the oscillator Range C trimmer.

Range D Alignment

18,300 KC Adjustment

Set the signal generator for 18,300 KC.

Keep the antenna lead of the receiver connected through the 400 ohm resistor to the output of the signal generator.

Turn the rotor of the tuning condenser to the full open position.

Turn the band selector to the Range D position (2nd short wave band—red dial color).

As mentioned above, keep the volume control at the maximum position and attenuate the signal from the signal generator to prevent A.V.C. action.

Adjust the oscillator Range D trimmer (C77) until maximum output is obtained. See Fig. 6 for location of this trimmer.

15,000 KC Adjustment

Set the signal generator for 15,000 KC. Turn the rotor of the tuning condenser carefully until maximum output is obtained.

Adjust the 1st and 2nd interstage Range D trimmers (C15 and C20) and antenna Range D trimmer (C1) to maximum.

When adjusting the 2nd interstage Range D trimmer, it will be necessary at the same time to turn the tuning condenser rotor slowly back and forth until the peak of greatest intensity is obtained.

Then go back and repeat the procedure as given for the 18,300 KC adjustment. If it is found necessary to make any appreciable change in the setting of the oscillator Range D trimmer, the 15,000 KC adjustment must be repeated.

Do not make any further change in the setting of the oscillator Range D trimmer.

6000 KC Adjustment

Set the signal generator for 6000 KC.

Turn the tuning condenser rotor until maximum output is obtained.

Turn the rotor slowly back and forth at the same time adjusting the 6000 KC trimmer until the peak of greatest intensity is obtained. See Fig. 6 for location of this trimmer.

Use a non-metallic screwdriver for this adjustment.

Range E Alignment

48,000 KC Adjustment

Set the signal generator for 48,000 KC.

Keep the antenna lead of the receiver connected through the 400 ohm resistor to the output of the signal generator.

Turn the rotor of the tuning condenser to the full open position.

Turn the band selector to the Range E position (3rd short wave band—brown dial color).

Adjust the oscillator Range E trimmer (C30) until maximum output is obtained. See Fig. 6 for location of this trimmer.

40,000 KC Adjustment

Set the signal generator for 40,000 KC.

Turn the rotor of the tuning condenser carefully until maximum output is obtained.

Adjust the interstage Range E trimmer (C14) and antenna Range E trimmer (C6) to maximum.

Do not change the setting of the oscillator Range E trimmer.

Switch Contact Location Numbering

A standard arrangement for switch contact location numbering has been adopted. This numbering is illustrated in Fig. 9. In contact locations not used, the number applying to that particular location is not employed.

Twenty-five Cycle Receivers

The twenty-five cycle receiver differs from the sixty cycle receiver in the fact that special twenty five cycle filament and "B" power transformers must be used. It also has two additional condensers in the power unit—C67 and C68 as illustrated in Fig. 3. The twenty-five cycle transformers and the condensers are shown in the parts list.

The twenty-five cycle receiver can be operated satisfactorily from a sixty cycle power supply if the two condensers C67 and C68 are removed. However, the reverse is not true, that is, a sixty cycle receiver cannot be operated from a twenty-five cycle power supply.

115-230 Volt, 40 to 60 cycle filament and "B" power transformers are also available for this model.

©John F. Rider, Publisher

©John F. Rider, Publisher

Replacement Parts

NOTICE—A change has been made in our parts numbering system. Old parts which are used in new receivers will have a new number assigned to them. For your convenience we are listing below the new part number and the corresponding old part number, should there be one. **Order by new part number only.**

There is a large letter stamped on the bottom side of the chassis base which identifies the set as to major part changes. When ordering parts please be sure to mention the series number and this large letter.

MISCELLANEOUS
(IN R. F. CHASSIS)

New Part No.	Old Part No.	Description	List Price
P-1A120	2042	Type 6B7 Tube Socket (7 Prong)	$ .15
P-1A121	1948	Type 6F7 Tube Socket (7 Prong)	.15
P-1A126	2022	Type 76 Tube Socket (5 Prong)	.10
P-1A211		Type 6K7 Tube Socket (7 Prong) Metal Tube	.15
P-1A213		Phone Socket (6 Prong) in R.F. Chassis	.10
P-6A206		Phono Plug and Cap Assembly	.40
P-12X36		Tube Shield (Used on 6B7, 6F7, 76 Osc. & 76 A.V.C. Amp.)	.20
P-12X37		Clear Top Type Tube Shield (76 A.V.C. Diode)	.15
P-12X34		Tube Shield Mates for above Shields	.10
P-12A206		12 Inch Dynamic Speaker (55 Cycle Resonance Point)	23.50
P-12A213		12 Inch Dynamic Speaker (70 Cycle Resonance Point)	23.50
P-12X4		Ohmite Crystal	.20
P-20X40		Crystal Retaining Ring	.10
Specify Name of Knob and Model of Receiver		Small Push-On Type Knob Large Set Screw Type Knob Selectivity Control Knob; Special Set Screw Type	.15 .20 .45
P-20X38	10880	Felt Washers (for use with above knobs)	.10
P-6X21	10875	Rubber Chassis Mounting Cushions	.10
P-2A48		Band Selector Switch Only	3.85
P-2A49		Selectivity Control Switch	.85
P-4A50		Two Lug Terminal Strip (Mtg. Hole in Center)	.10
P-4A49		Single Lug Terminal Strip (Mounting hole used)	.10
P-4A41	2139	Power Leg Terminal Strip (2 Lugs Insulated—Ground Leg extended as Mounting Foot)	.10
P-4A17	1421	Single Lug Terminal Strip (Mounting Foot to Right of Lug)	.10
P-4A46	2286	Two Lug Terminal Strip (1 Lug Insulated—Ground Lug extended as Mounting Foot)	.10
P-4A18	1441	Two Lug Terminal Strip (2 Lugs Insulated—Mounting Foot in Center)	.10
P-13X220		"A" Power Cable	1.50
P-13X221		"B" Power Cable	2.50
P-13X214		Antenna and Ground Lead Assembly	.30
P-6A205		"A" Power Cable Plug (6 Prong Fit Plate)	.10
P-6A204		"B" Power Cable Plug (3 Prong Fit Plate)	.10
P-30X14	30342	Grid Clip Only (6B7 and 6F7 Tubes)	.10
P-30X44		Grid Clip Only (6K7 Tubes)	.10

(IN A. F. CHASSIS)

P-1A63	1643	Type 41 Tube Socket (4 Prong)	.10
P-1A120	2035	Type 5Z3 Tube Socket (4 Prong)	.10
P-1A129		Type 2A3 Tube Socket (4 Prong)	.10
P-1A36	1637	3 Prong Speaker Socket	.10
P-3A208		"A" Power Cable Socket	.10
P-1A207		"B" Power Cable Socket	.10
P-4A51		10 Lug Terminal Strip	.10
P-4A17	1421	Single Lug Terminal Strip (Mounting Foot to Right of Lug)	.10
P-4A18	1441	Two Lug Terminal Strip (2 Lugs Insulated—Mounting Foot in Center)	.10
P-11X80	70785	Line Cord and Plug	.30

RESISTORS

New Part No.	Code	Resistance	Wattage	Type	List Price
P-A9253	R1	25,000 Ohms	0.2	Carbon	$ .10
P-16X212	R2	2,500 Ohms	3	Section Volume Control and Switch	2.15
	R3	2.0 Megohms			
	LR17	1.0 Megohm			
P-A9131	R3	151 Ohms	0.2	Carbon	.15
P-A9408	R4	300 Ohms	0.2	Carbon	.15
P-A9104	R5	100,000 Ohms	0.2	Carbon	.15
P-A9104	R6	100,000 Ohms	0.2	Carbon	.15
P-A9104	R7	100,000 Ohms	0.2	Carbon	.15
P-41X46	R9	60 Ohms	9.5	Armored Wire Wound	1.30
	R12	70 Ohms	6.5		
	R13	2,500 Ohms	6.0		
	R16	4,000 Ohms	10.0		
P-C9403	R10	60,000 Ohms	1.0	Carbon	.15
P-B9103	R11	10,000 Ohms	0.5	Carbon	.10
P-B9503	R13	40,000 Ohms	0.5	Carbon	.15
P-A9403	R14	40,000 Ohms	0.2	Carbon	.15
P-A9154	R18	150,000 Ohms	0.2	Carbon	.15
P-A9104	R19	100,000 Ohms	0.2	Carbon	.15
P-41X47	R20	2.0 Ohms	1.0	Armored Wire Wound	.25
P-A9205	R21	2.0 Megohms	0.2	Carbon	.10
P-A9164	R22	160,000 Ohms	0.2	Carbon	.15
P-A9253	R23	25,000 Ohms	0.2	Carbon	.15
P-A9253	R24	25,000 Ohms	0.2	Carbon	.15
P-A9304	R25	300,000 Ohms	0.2	Carbon	.10
P-40X208	R26	1.0 Megohm		Tone Control	1.35

RESISTORS—Continued

New Part No.	Code	Resistance	Wattage	Type	List Price
P-A9253	R27	1,500 Ohms	0.2	Carbon	$ .15
P-A9403	R28	40,000 Ohms	0.2	Carbon	.15
P-B9153	R29	15,000 Ohms	1.0	Carbon	.20
*P-A9304	R30	300,000 Ohms	0.2	Carbon	.10
*P-A9202	R31	2,000 Ohms	0.2	Carbon	.10
*P-A9202	R32	2,000 Ohms	0.2	Carbon	.10
*P-A9504	R33	500,000 Ohms	0.2	Carbon	.10
*P-A9202	R34	2,000 Ohms	0.2	Carbon	.10
*P-A9202	R35	2,000 Ohms	0.2	Carbon	.10
*P-A9151	R37	150 Ohms	0.2	Carbon	.10
*P-A9304	R38	300,000 Ohms	0.2	Carbon	.10
*41X39	R39	130 Ohms	2.5	Armored Wire Wound	.35

*These items are part of the A.F. Chassis—All others are in the R.F. Chassis.

CONDENSERS

New Part No.	Code	Capacity	Voltage	Type	List Price
P-C7X39	C1	250 mmf.		Moulded	$ .15
P-C7X38	C2	35 mmf.		Moulded	.10
P-17A35	C3	2-25 mmf.	Range B	Antenna Trimmer	.35
P-17A35	C4	2-25 mmf.	Range C	Antenna Trimmer	.35
P-17A35	C5	2-25 mmf.	Range D	Antenna Trimmer	.35
P-17A41	C6	2-25 mmf.	Range E	Antenna Trimmer	.35
P-46X140	C7	0.05 mf.	180	Tubular	.15
P-C7X33	C8	35 mmf.		Moulded	.10
P-C7X32	C9	250 mmf.		Moulded	.15
P-46X158	C10	0.05 mf.	400	Tubular	.30
P-46X142	C11	0.25 mf.	180	Tubular	.35
P-46X144	C12	0.25 mf.	180	Tubular	.35
P-46X159	C13	0.05 mf.	400	Tubular	.30
P-17A43	C14	2-25 mmf.	Range E	Interstage Trimmer	.35
P-17A36	C15	2-25 mmf.	Range D	1st Interstage Trimmer	.30
P-17A36	C16	2-25 mmf.	Range C	1st Interstage Trimmer	.30
P-17A36	C17	2-25 mmf.	Range B	1st Interstage Trimmer	.30
P-17A36	C18	2-25 mmf.	Range B	2nd Interstage Trimmer	.30
P-17A36	C19	2-25 mmf.	Range C	2nd Interstage Trimmer	.30
P-17A36	C20	2-25 mmf.	Range D	2nd Interstage Trimmer	.30
P-46X140	C21	0.05 mf.	180	Tubular	.15
P-46X154	C22	0.25 mf.	400	Tubular	.35
P-17A39	C23	130-280 mmf.		1st I.F. Trimmer Condensers	.45
	C24	130-280 mmf.			
P-64X35	C25	40.0 mf.	150	Wet Electrolytic	2.05
P-17A39	C26	150-280 mmf.		2nd I.F. Trimmer Condensers	.45
	C27	150-280 mmf.			
P-46X140	C28	0.05 mf.	180	Tubular	.15
P-17A40	C29	70-130 mmf.	3rd	I.F. Primary Trimmer	.30
P-46X155	C30	0.10 mf.	400	Tubular	.30
P-C7X36	C31	50 mmf.		Moulded	.10
P-46X138	C32	0.05 mf.	360	Tubular	.15
P-46X140	C33	0.05 mf.	180	Tubular	.15
P-41X38	C34	4.0 mf.	200	Dry Electrolytic Block	2.10
	C35	16.0 mf.	150		
	C36	4.0 mf.	200		
P-46X36	C37	12.0 mf.	300	Tubular	1.25
P-46X148	C38	0.10 mf.	360	Tubular	.30
P-46X148	C39	0.05 mf.	360	Tubular	.15
P-46X148	C40	0.05 mf.	360	Tubular	.15
P-C7X37	C41	100 mmf.		Moulded	.10
P-46X156	C42	0.50 mf.	180	Tubular	.30
P-46X288	C43	0.02 mf.	400	Metal Case Block	.40
P-46X148	C44	0.05 mf.	360	Tubular	.15
P-46X148	C45	0.05 mf.	360	Tubular	.15
P-46X140	C46	0.05 mf.	180	Tubular	.15
P-C7X33	C47	35 mmf.		Moulded	.10
P-46X148	C48	0.05 mf.	360	Tubular	.30
P-46X146	C49	0.10 mf.	360	Tubular	.30
P-17A41	C50	2-25 mmf.		Moulded	.10
P-17A35	C51	800-650 mmf.	400	KC Osc. Padding Cond.	.45
	C52	40-160 mmf.	3000	KC Osc. Padding Cond.	
P-C7X35	C53	10 mmf.		Moulded	.15
P-17A42	C54	2-25 mmf.	Range B	Oscillator Trimmer	.30
P-C7X35	C55	10 mmf.		Moulded	.15
P-17A36	C56	2-25 mmf.	Range C	Oscillator Trimmer	.30
P-17A41	C57	2-25 mmf.	Range D	Oscillator Trimmer	.30
*P-64X33	C58	60.0 mf.	150	Wet Electrolytic	2.05
*	C59	0.03 mf.	400	Part of P-46X201 Cond. Block and 10 KC Reactor Assembly	
*	C60	0.35 mf.	200		
*P-64X32	C61	30.0 mf.	400	Wet Electrolytic	1.75
*P-64X32	C62	30.0 mf.	400	Wet Electrolytic	1.75
*P-64X32	C63	30.0 mf.	400	Wet Electrolytic	1.75
*P-64X32	C64	30.0 mf.	400	Wet Electrolytic	1.75
P-C7X31	C65	500 mmf.		Moulded	.15
P-C7X05	C66	10 mmf.		Moulded	.15
†*P-46X208	C67	0.70 mf.	200	Metal Case Block	1.95
†*P-46X208	C68	0.70 mf.	200	Metal Case Block	1.95
P-25A40		4 Section Gang Condenser and Drive Assembly—Less Dial Assembly			7.85

*These items are part of the A.F. Chassis. All others are in R.F. Chassis.

†Used in 25 Cycle receivers only.

TRANSFORMERS AND COILS

New Part No.	Code	Winding	List Price
P-9A488	T1	Antenna R.F. Transformer and Can Assembly	$4.05
P-9A425	T2	"E" Range Antenna R.F. Coil Assembly	.85
P-9A429	T3	1st Interstage R.F. Transformer and Can Assembly	3.40
P-9A426	T4	"E" Range Interstage R.F. Coil Assembly	.60
P-9A430	T5	2nd Interstage R.F. Coils Assembly	3.50
P-9A432	T6	1st I.F. Transformer and Can Assembly	3.05
P-9A433	T7	2nd I.F. Transformer and Can Assembly	3.05
P-9A434	T8	3rd I.F. Transformer and Can Assembly	3.05
P-9A431	T9	Oscillator Coils and Can Assembly	3.30
P-9A427	T10	"E" Range Oscillator Coil Assembly	1.00
*P-51X88	T11	Filament Transformer (115 Volt - 60 Cycle)	6.85
*P-51X106		Filament Transformer (115 Volt - 25 Cycle)	13.30
*P-51X104		Filament Transformer (115-230 Volt; 40-60 Cycle)	11.50
*P-51X85	T12	"B" Power Transformer (115 Volt - 60 Cycle)	8.65
*P-51X108		"B" Power Transformer (115-230 Volt; 40-60 Cycle)	15.00
*P-51X107		"B" Power Transformer (115 Volt - 25 Cycle)	17.50
*P-51X35	T13	Audio Input Transformer	5.30
*P-51X33	T14	Audio Output Transformer	5.65
P-9A391	L1	"E" Range Interstage Plate Reactor	.25
P-9A430	L2	2nd I.F. Plate Isolating Reactor	.55
P-9A391	L3	High Frequency Oscillator Tracking Coil	.25
P-52X35	L4	Filter Reactor	2.45
•	L5	10 KC Reactor (Part of P-46X201)	.85
*P-52X36	L6	Filter Reactor	3.55
*P-46X201	B1	Block Condenser (C59 & C60) and 10 KC Reactor—(L5) Assembly	2.35

*These Items are part of the A.F. Chassis. All others are on R.F. Chassis.

Prices Subject to Change Without Notice.

D. C. Resistance of Windings
Refer to Figs. 12, 2 & 3.

Part No.	Winding	Code	D. C. Resistance in Ohms
P-9A428	Antenna R.F. Transformer	T1	
	Range B Primary Winding		22.5
	Range C Primary Winding		8.35
	Range D Primary Winding		0.2
	Range B Secondary Winding		6.1
	Range C Secondary Winding		1.8
	Range D Secondary Winding		Small
P-9A425	"E" Range Antenna R.F. Coil	T2	Small
P-9A429	1st Interstage R.F. Transformer	T3	
	Range B Primary Winding		2.7
	Range C Primary Winding		2.5
	Range D Primary Winding		2.1
	Range B Secondary Winding		2.5
	Range C Secondary Winding		1.8
	Range D Secondary Winding		Small
P-9A426	"E" Range Interstage R.F. Coil—Tap to other side	T4	Small
P-51X81	"B" Power Transformer (115 Volts 60 Cycles)	T12	
	Primary Winding		1.9
	Secondary Winding		
	Center Tap to Inside		48.0
	Center Tap to Outside		53.1
P-51X35	Audio Input Transformer	T13	
	Primary Winding		
	Tap to Plate of 6F7		6600.
	Tap to Tone Control and Plate of 6B7		4600.
	Secondary Winding		
	Center Tap to Inside		2840.
	Center Tap to Outside		3265.
P-51X33	Audio Output Transformer	T14	
	Primary Winding		
	Center Tap to Inside		19.7
	Center Tap to Outside		22.4
	Secondary Winding		0.4
P-12A206	12" Dynamic Speaker		
	Speaker Voice Coil		6.3
	Speaker Field	L7	4500.
P-12A213	12" Dynamic Speaker		
	Speaker Voice Coil		6.3
	Speaker Field	L8	4800.
P-9A391	"E" Range Interstage Plate Reactor	L1	1.0
P-9A430	2nd I.F. Plate Isolating Reactor	L2	35.0
P-9A391	High Frequency Oscillator Tracking Coil	L3	1.0

DIAL AND DRIVE ASSEMBLY

New Part No.	Old Part No.	Description	List Price
		Dial Assembly Complete Less Large Pointers, Less Pilot Lamp Sockets and Bulbs	$5.75
P-28X35		Gear Spreader Springs Only	.10
P-28X49		Tension Pulley Spring Only	.10
P-27X36		Drive Belt	.20
P-28X45		Pointer Slide Take-up Spring	.10
P-10X9		4 Inch Indicator Cords	doz. .10
P-29X51		Brass Collars and Set Screws only for securing above Drive Cords to Shaft	.20
		Dial Strip Only (Specify Series No. and Name of Receiver)	.55
P-30X45		Dial Clamp to secure Dial Strip to Frame (with 6-32 x 3/16" Mounting Screw)	.10
		Double End Pointer (Specify Series No. and Name of Receiver)	.10
P-15X26		Micrometer Pointer	.10
P-7A26	2012	Pilot Lamp Bulb (6 - 8V)	.15
P-7A34		Pilot Lamp Sockets and Spring Clip	.15

PHONO ATTACHMENT PARTS
(The following parts are recommended for use when Radio and Phonograph are in separate cabinets)

The first two items only are required

New Part No.	Old Part No.	Description	List Price
P-13X228		Phono Cable (20 feet long)	$5.35
P-13A7		Phono Panel and Switch Assembly Complete	4.15
		The following items are part of the phono panel and switch assembly (P-13A7) listed above and may be purchased separately:	
P-25X261		Phono Attachment Panel Only	2.40
P-2A30		Phono Switch	.60
P-3A12	1193	Phono Jack	.10
P-6A205		6 Prong Phono Cable Pin Plate	.10
P-10X4	20251	Flat Washers	.10
P-10A36	2122	Switch Knob	.20
5 Ft.		Shielded Hook-up Wire	.20

(The following parts are recommended for use when Radio and Phonograph are in the same cabinet)

The first item only is required

P-13A8		Complete Phono Kit (Includes all following parts)	1.20
P-6X3	10833	Rubber Grommet	.10
P-2A30		Phono Switch	.60
P-3A12	1193	Phone Jack	.10
P-10A36	2122	Switch Knob	.20
5 Ft.		Shielded Hook-up Wire	.20

P-52X35	Filter Reactor	L4	51.6
P-52X36	Filter Reactor	L6	11.2
P-46X201	Block Condenser & 10 KC Reactor Assembly	B1	
	10 KC Reactor	L5	8.6
P-9A430	2nd Interstage R.F. Coils	T5	
	Range B Section		
	Long Portion		1.6
	Short Portion		0.2
	Range C Section		
	Long Portion		1.9
	Short Portion		0.2
	Range-D Section		Small
P-9A432	1st I.F. Transformer	T6	
	Primary Winding		4.4
	Coupling Winding		0.3
	Secondary Winding		
	Tap to Condenser Side		3.0
	Tap to Switch Side		1.3
P-9A433	2nd I.F. Transformer	T7	
	Primary Winding		4.4
	Coupling Winding		0.3
	Secondary Winding		
	Tap to Condenser Side		3.0
	Tap to Switch Side		1.3
P-9A434	3rd I.F. Transformer	T8	
	Primary Winding (Yellow to Blue)		9.7
	Signal Diode Secondary		12.4
	A.V.C. Secondary (Brown to Green)		7.6
P-9A431	Oscillator Coils	T9	
	Range B Grid Coil		
	Red-White tap to White		3.0
	Red-White tap to Black-Yellow		0.8
	Range C Grid Coil		
	Green-White tap to Green		1.7
	Green-White tap to Black-Yellow		0.5
	Range D Grid Coil		
	Black-White tap to Black		Small
	Black-White tap to Black-Yellow		Small
	Oscillator Range-D Plate Coil		0.3
P-9A427	"E" Range Oscillator Coils	T10	
	Range B Grid Coil		Small
	Range E Plate Coil		4
	Range E Series Grid Coil		Small
P-51X88	Filament Transformer (115 Volts 60 Cycles)	T11	
	Primary Winding		4.4
	Filament Transformer Secondaries, below		
	Red to Red		Small
	Black to Black		Small
	Yellow to Yellow		Small
	Green to Green		Small
	Black to White		22.5
	Red-White to Red		22.9

GAMBLE-SKOGMO, INC.

MODEL 26-3-1
Schematic
Alignment

Power Consumption - - 6.5 Amperes at 6.3 Volts
Power Output - - - - - 3 Watts Undistorted

Tuning Frequency Range - - - - - 530-1650 KC

1-Signal Gen. setting for IF adjustment is 175 KC.
2-Sig. Gen. setting for Osc. Sect. of Gang Cond. is 1650 KC.
3-Sig. Gen. Setting for 1st Det. & Antenna trimmer adjustments is 1400 KC.

Sept. 1935

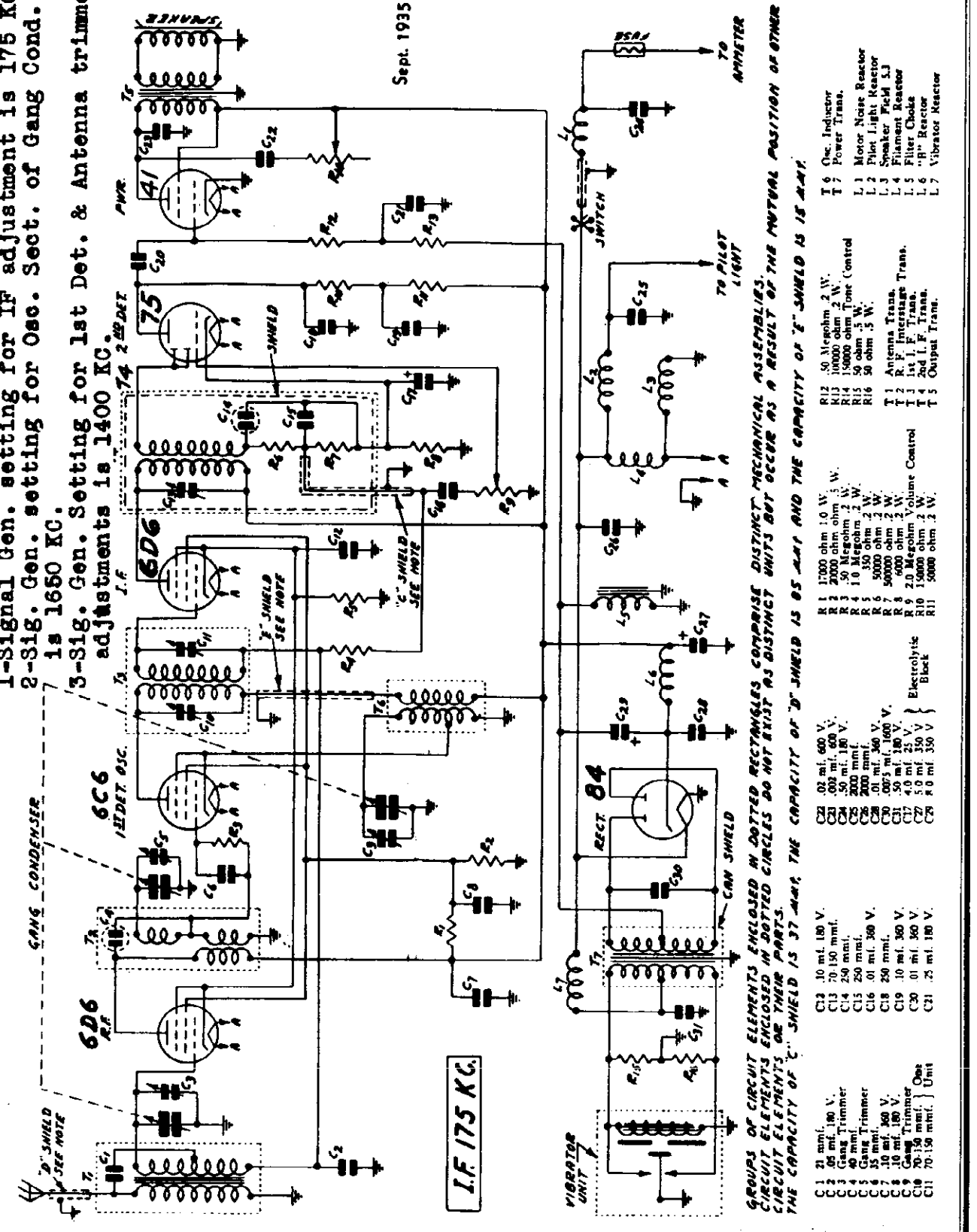

C1 21 mmf.
C2 .05 mf. 180 V.
C3 Gang Trimmer
C4 40 mmf.
C5 Gang Trimmer
C6 55 mmf.
C7 .10 mf. 360 V.
C8 .10 mf. 180 V.
C9 Gang Trimmer
C10 70-150 mmf. } Osc.
C11 70-150 mmf. } Unit

C12 .10 mf. 180 V.
C13 70-150 mmf.
C14 250 mmf.
C15 250 mmf.
C16 .01 mf. 360 V.
C18 250 mmf.
C19 .10 mf. 360 V.
C20 .01 mf. 360 V.
C21 .25 mf. 180 V.

C22 .02 mf. 600 V.
C23 .002 mf. 600 V.
C24 .50 mf. 180 V.
C25 2000 mmf.
C26 2000 mmf.
C27 .01 mf. 360 V.
C28 .0075 mf. 1600 V.
C29 .50 mf. 180 V.
C31 4.0 mf. 25 V.
C32 5.0 mf. 350 V. } Electrolytic
C33 8.0 mf. 350 V. } Block

R1 17000 ohm 1.0 W.
R2 2000 ohm ohm .5 W.
R3 .50 Megohm .2 W.
R4 1.0 Megohm .2 W.
R5 350 ohm .2 W.
R6 50000 ohm .2 W.
R7 500000 ohm .2 W.
R8 6000 ohm .2 W.
R9 2.0 Megohm Volume Control
R10 150000 ohm .2 W.
R11 50000 ohm .2 W.

R12 .50 Megohm .2 W.
R13 10000 ohm .2 W.
R14 150000 ohm Tone Control
R15 50 ohm .5 W.
R16 50 ohm .5 W.

T1 Antenna Trans.
T2 R. F. Interstage Trans.
T3 1st I. F. Trans.
T4 2nd I. F. Trans.
T5 Output Trans.
T6 Osc. Inductor
T7 Power Trans.

L1 Motor Noise Reactor
L2 Pilot Light Reactor
L3 Speaker Field S.J
L4 Filament Reactor
L5 Filter Chokes
L6 "B" Reactor
L7 Vibrator Reactor

GROUPS OF CIRCUIT ELEMENTS ENCLOSED IN DOTTED RECTANGLES COMPRISE DISTINCT MECHANICAL ASSEMBLIES. CIRCUIT ELEMENTS ENCLOSED IN DOTTED CIRCLES DO NOT EXIST AS DISTINCT UNITS BUT OCCUR AS A RESULT OF THE MUTUAL POSITION OF OTHER THE CAPACITY OF "C" SHIELD IS 37 MMF. THE CAPACITY OF "D" SHIELD IS 85 MMF AND THE CAPACITY OF "E" SHIELD IS 15 MMF.

©John F. Rider, Publisher

MODEL 26-R-1
Voltage, Socket
Trimmers, Color Code
Resistance, Mounting

GAMBLE-SKOGMO, INC.

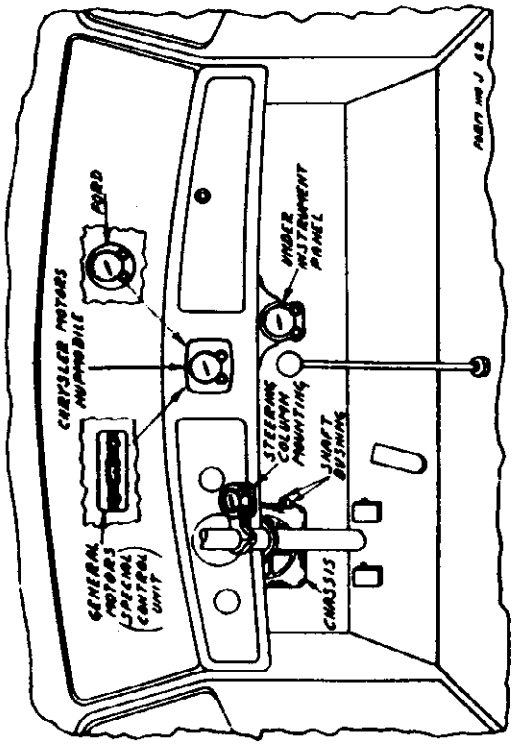

Fig. 5—Various Control Unit Mountings

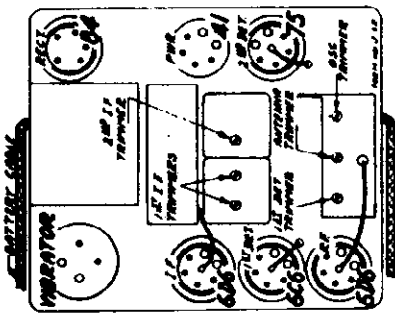

Fig. 2—Location of Tubes and Trimmers

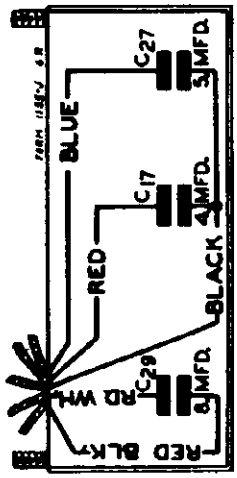

Fig. 4—Condenser Block—Internal Wiring

VOLTAGES AT SOCKETS

Antenna Disconnected **Battery 6 Volts Under Load**

Type of Tube	Function	Across Heater	Plate to Ground	Screen to Ground	Cathode to Ground	Cathode Current M. A.
6D6	R. F. Amp.	5.8	220	90	4.5	6.3
6C6	1st Det. Osc	5.8	220	90	0	2.4
6D6	I. F. Amp.	5.8	220	90	4.5	6.3
75	2nd Det.	5.8	130(1)		1.2	0.3
41	Power	5.8	210	220	16(2)	25.5
84	Rectifier	5.8				50.0

(1) With 250,000 Ohm Meter
(2) As read across filter choke.

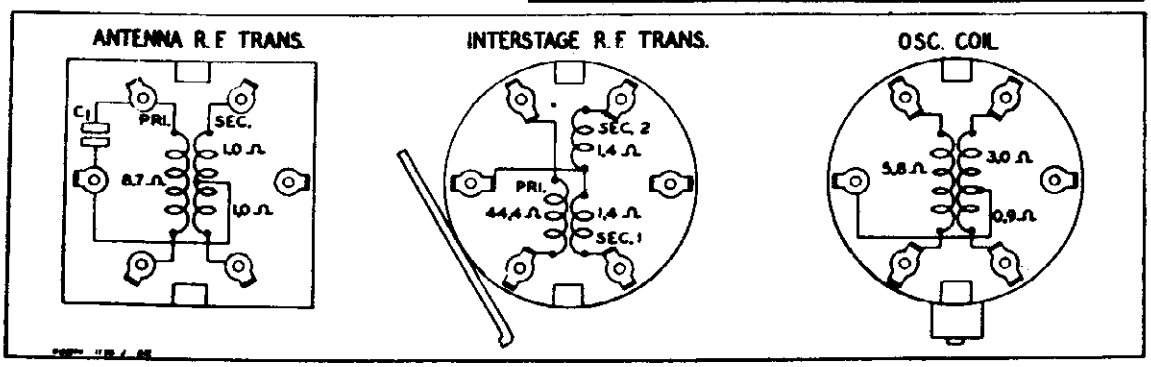

Fig. 3—R. F. and Oscillator Coil Base Terminal Arrangement and D. C. Resistance of Windings

D. C. Resistance of Windings

Following are the D. C. resistances of the various windings in the chassis. The values given below will vary slightly in different sets.

Part No.	Winding	Code	D. C. Resistance in Ohms
P-9A443	Antenna Transformer	T1	
	Primary Winding		8.7
	Secondary Winding—Either Portion		1.0
P-9A439	Interstage Transformer	T2	
	Primary Winding		44.4
	Secondary Winding—Either Portion		1.4
P-9A441	1st I. F. Transformer	T3	
	Primary Winding		93.5
	Secondary Winding		97.6
P-9A442	2nd I. F. Transformer	T4	
	Primary Winding		44.1
	Secondary Winding		49.6
P-12A227	Dynamic Speaker		
	Output Transformer Primary	T5	416.6
	Output Transformer Secondary	T5	Small
	Speaker Field	L3	5.3
	Speaker Voice Coil		Small
P-9A440	Oscillator Coils	T6	
	Grid Coil		
	Long Portion		3.0
	Short Portion		0.9
	Plate Coil		5.8
P-53X108	Power Transformer	T7	
	Primary Winding		
	Center Tap to Inside		Small
	Center Tap to Outside		Small
	Secondary Winding		
	Center Tap to Inside		200.
	Center Tap to Outside		200.
P-9A444	Motor Noise Reactor	L1	Small
P-9A448	Pilot Light Line Reactor	L2	Small
P-9A446	Filament Reactor	L4	Small
P-52X42	Filter Choke	L5	312.5
P-9A447	R. F. "B" Plate Reactor	L6	4.1
P-9A445	Vibrator Filter Reactor	L7	Small

©John F. Rider, Publisher

GAMBLE-SKOGMO, INC.

MODEL 27-C-1
Schematic, Voltage Socket, Parts

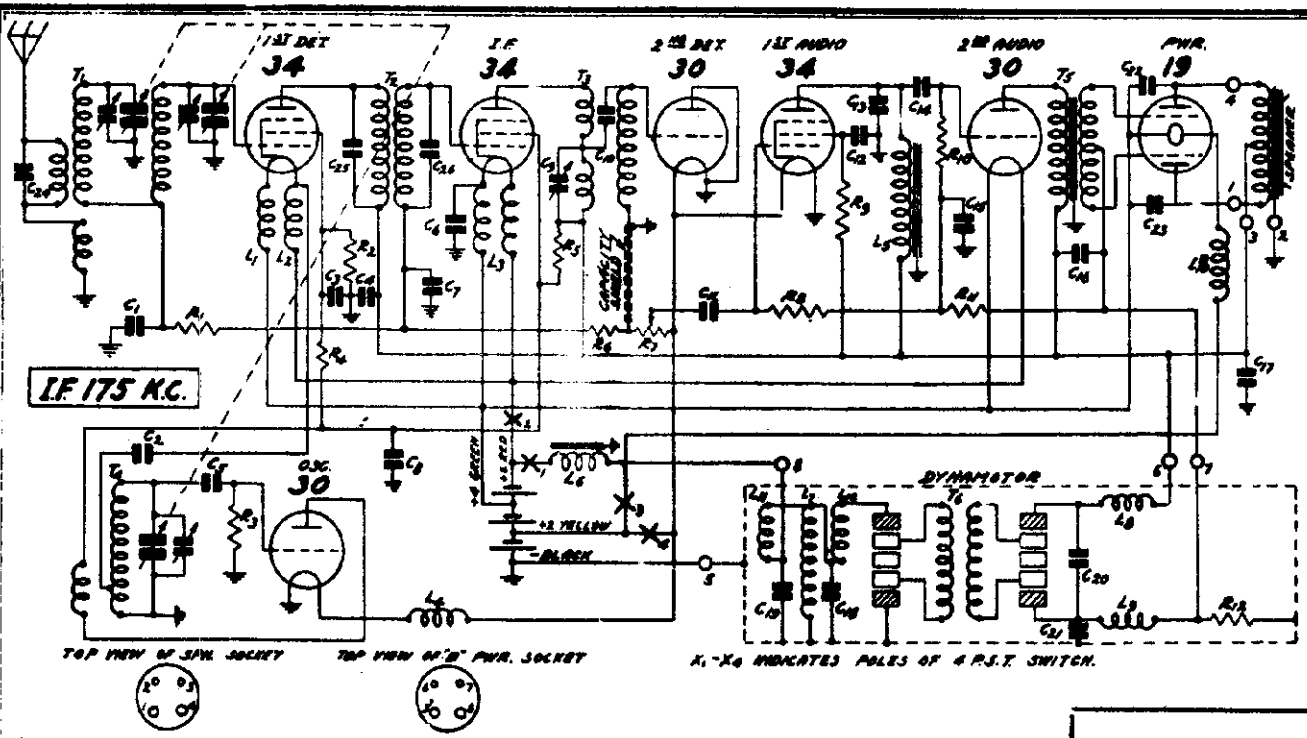

RESISTORS

Part No.	Code	Resistance	Wattage	Type
P-A95104	R1	100,000 Ohm	.2	Carbon
P-A93803	R2	30,000 Ohm	.2	Carbon
P-A95104	R3	100,000 Ohm	.2	Carbon
P-A93602	R4	6,000 Ohm	.2	Carbon
P-B93902	R5	9,000 Ohm	.2	Carbon
P-A95505	R6	5 Megohm	.2	Carbon
P- 96012	R7	1 Megohm		Volume Control
P-A95605	R8	5 Megohm	.2	Carbon
P-A94603	R9	60,000 Ohm	.2	Carbon
P-A95104	R10	100,000 Ohm	.2	Carbon
P-A95104	R11	100,000 Ohm	.2	Carbon

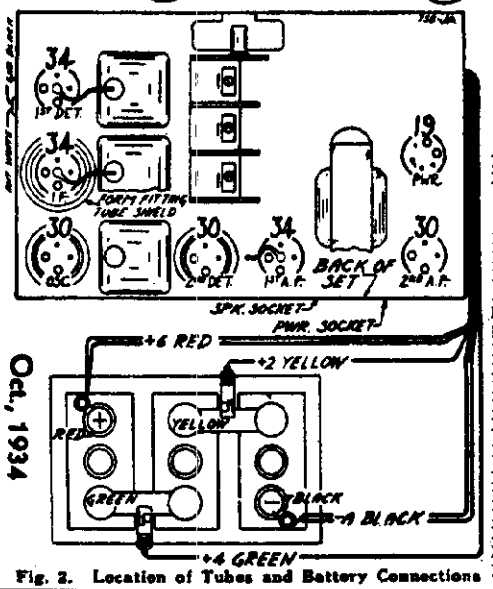

Fig. 2. Location of Tubes and Battery Connections

Fig. 1. Schematic Circuit Diagram

CONDENSERS

Part No.	Code	Capacity		Voltage	Type
P-80852	C1	0.050	Mf.	200V	Tubular
P-80852	C2	0.050	Mf.	200V	Tubular
P-80852	C3	0.050	Mf.	200V	Tubular
P-80854	C4	0.100	Mf.	200V	Tubular
P-81801	C5	35	Mmf.		Cap. Part of Osc. Coil Assem.
P-80888	C6	0.250	Mf.	200V	Tubular
P-80852	C7	0.050	Mf.	200V	Tubular
P-80988	C8	1.500	Mf.	140V	Tubular
P-1965	C9	70-140	Mmf.		Trimmer
P-81800	C10	50	Mmf.		Cap. Part of 2nd I.F. Coil As.
P-80951	C11	0.010	Mf.	400V	Tubular
P-80888	C12	0.250	Mf.	200V	Tubular
P-80945	C13	500	Mmf.		Moulded
P-80852	C14	0.050	Mf.		Tubular
P-80888	C15	0.250	Mf.	200V	Tubular
P-81014	C16	16.00	Mf.		Electrolytic Block
	C17	15.00	Mf.		
P-80914	C22	0.002	Mf.	600V	Tubular
P-80914	C23	0.002	Mf.	600V	Tubular
P-81812	C24	200	Mmf.		Cap. Part of Ant. Assem.
P-81807	C25	70	Mmf.		Cap. Part of 1st I.F. Coil As.
P-81805	C26	45	Mmf.		Cap. Part of 1st I.F. Coil As.
P-81019		Three Gang Condenser			

Voltages at Sockets

ANTENNA SHORTED TO GROUND

Type of Tube	Function	Filament Volt.	Plate to Neg. Filament	Screen to Neg. Filament	Grid to Neg. Filament	Normal Plate M. A.
34	1st Detector	2.0	135	55	3.0 av.	1.90
30	Oscillator	2.0	75		0.0	3.70
34	I. F.	2.0	135	70	3.0 av.	8.00
30	2nd Detector	2.0	2			
34	1st A. F.	2.0	140	65	4.0	2.30
30	2nd A. F.	2.0	135		8.0	8.10
19	Output	2.0	137		6.0	1.00 per plate

Oct, 1934

MODEL 27-C-1
Alignment

GAMBLE-SKOGMO, INC.

Resistance
Drive Cord Data

Condenser Alignment

Misalignment or mistracking of condensers generally manifests itself as broad tuning and lack of volume at portions or all of the standard wave band. The receivers are all properly aligned at the factory with precision instruments and realignment should not be attempted unless all other possible causes of the faulty operation have first been investigated and unless the service technician has the proper equipment. A signal generator that will provide accurately calibrated signals over the standard wave band and at the intermediate frequency, and an output meter are required for indicating the effect of adjustments.

First set the signal generator to a frequency of 175 KC. Connect the antenna lead of the lead generator to the grid of the 1st detector thru a .05 mfd. condenser. The ground lead from the signal generator goes to the ground lead of the receiver. Adjust trimmer condenser C9 on the back panel of the chassis until maximum output is obtained. A non-metallic screw driver should be used in making this adjustment as the I. F. trimmer is at B+ potential.

Next set the signal generator for 1730 KC. Turn the rotor to the full open position. The antenna lead from the signal generator is in this instance connected to the antenna lead of the receiver. Adjust the trimmer of the oscillator section of the 3 gang condenser until maximum output is obtained. The oscillator section is the one with the cut plate rotor.

Then set the signal generator for 1400 KC and turn the rotor until maximum output is obtained. Adjust the other two trimmers on the gang condenser for maximum output.

To obtain dial scale calibration tune in an 800 KC signal and set the dial pointer at that mark on the dial scale. When calibrated in this manner, the setting will be approximately correct at both ends of the scale.

The use of the cut plate type of condenser eliminates the necessity of a 600 KC padder and no adjustment at this frequency, therefore, is required.

Replacing Drive Cord

Remove chassis from cabinet.

Take off the pilot light assembly by lifting off the two sockets and spring clips.

Detach the large pointer by removing the screw at the center of the dial.

Loosen the dial assembly by taking out the two screws which secure the bottom of this assembly to the chassis.

Then lay the complete dial assembly face downward in front of the chassis. It is not necessary to remove the volume control and Off-On switch collars which hold the indicator cords of these two controls in position.

Turn the drive drum until the opening in this drum is approximately vertical and with the hole at the top as shown in Fig. 4.

Remove the tension spring and the old drive cord.

See that the eyelet is in the hole in the drive drum as shown in Fig. 4. Insert one end of the drive cord from the outside through the hole in the eyelet in the drive drum.

Tie the end of the cord which has been inserted in the hole to one end of the tension spring.

Wrap the cord in a clockwise direction (facing front of chassis) around the drive drum approximately one-half turn.

Then tilt the chassis up on its back panel and bring the cord mentioned in the previous paragraph down to the drive shaft. Wrap it two and one-half times around the drive shaft as shown in Fig. 4.

Then bring this cord up from the drive shaft and wrap it around the drive drum approximately one and one fifth turns in a clockwise direction until it is up to the hole in this drum as illustrated.

Insert the free end of the cord through the hole in the eyelet and tie it to the end of the tension spring. The end of the spring, when hanging free, should be approximately ¾" from the flange of the drum as shown in Fig. 4. Cut off the surplus length of cord after it is knotted.

Then secure the other end of the tension spring over the spur on the drive drum.

Replace the dial assembly and pointer.

Replace the pilot light assembly after which the chassis may be reinstalled in the cabinet.

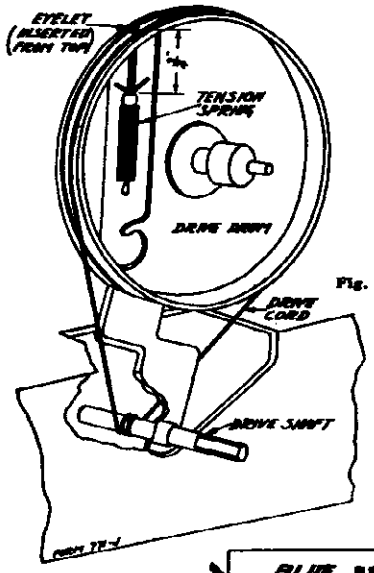

Fig. 4 Drive Cord Replacement.

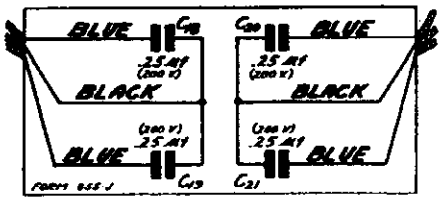

Fig. 3. Four Section Condenser in Power Unit Box

D. C. Resistance of Windings

Following are the D. C. resistances of the various windings in the chassis. The values given below will vary slightly in different sets.

Part No.	Item	Code	D. C. Resistance in Ohms
P-5200	Double Tuned Antenna Transformer, Primaries in series	T1	20.1
	Double Tuned Antenna Transformer Secondary Preselector	T1	3.3
	Double Tuned Antenna Transformer Secondary Detector	T1	3.1
P-5169	Oscillator Grid Coil	T4	3.6
	Oscillator Plate Coil	T4	1.6
P-5170	I. F. Coil Primary	T2	89.
	I. F. Coil Secondary	T2	126.
P-5171	I. F. Reactor Coil Plate Winding	T3	99.
	I. F. Reactor Coil Grid Winding	T3	429.
P-5172	Double Filament Reactor Assembly each section	L1, L2	Small
P-5173	Combined Filament Reactor Assembly each section	L3, L4	Small
P-50621	Audio Plate Reactor	L5	4940.
P-50622	Iron Core Isolating Reactor	L6	Small
P-5222	Filament Reactor	L10	Small
P-50625	Audio Transformer Primary	T5	1066.
	Audio Transformer Secondary (center tap to inside)	T5	614.
	Audio Transformer Secondary (center tap to outside)	T5	666.
P-2010	6" Magnetic Speaker (center tap to inside)		260.
	6" Magnetic Speaker (center tap to outside)		300.

©John F. Rider, Publisher

GAMBLE-SKOGMO, INC.

MODEL 51-BT
Schematic
Trimmers

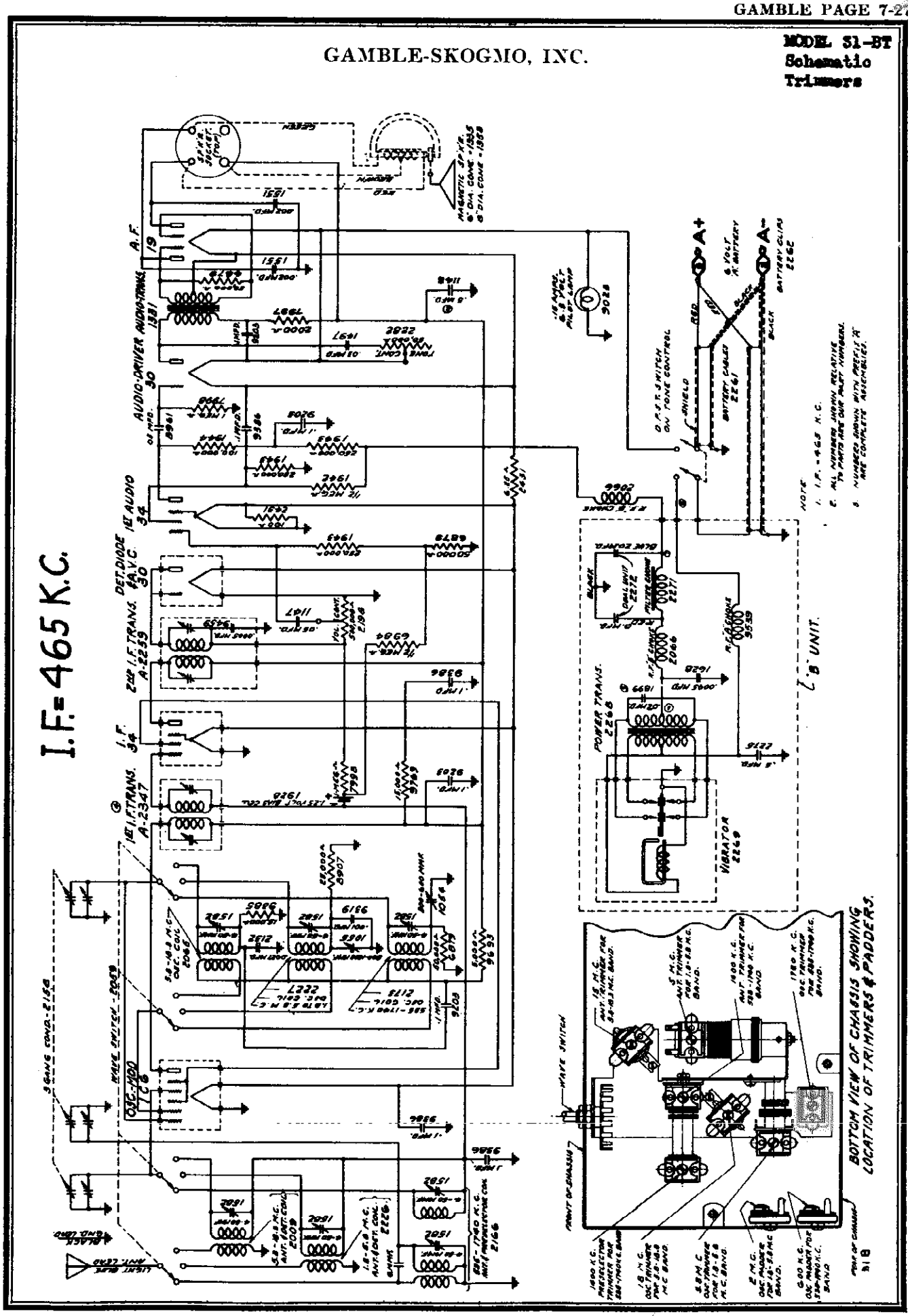

©John F. Rider, Publisher

MODEL 31-BT
Alignment
Parts List

GAMBLE-SKOGMO, INC.

"Coronado" Model 31BT

Service Notes For The Six Volt Battery Operated Six Tube Superheterodyne Receiver

ALIGNMENT PROCEDURE: Realignment of this receiver should never be necessary unless one of the oscillator, antenna, or I.F. coils has been replaced. Lack of sensitivity, and poor tone quality may be due to any one or a combination of causes, such as weak or defective tubes, battery or speaker, inadequate or excessively long antenna, open or grounded bias resistor, bypass condenser, etc. Under no circumstances should realignment be attempted until all other possible sources have been first thoroughly investigated and have been definitely proven not to be the cause.

If an I.F. tube is replaced it is advisable to realign the I.F. amplifer, particularly if the replacement tube is one of a different manufacture than the one in the receiver. It is important when aligning to carefully follow the procedure in the order given, otherwise the receiver will lack sensitivity and the dial calibration will be incorrect.

IT IS IMPERATIVE THAT AN ACCURATELY CALIBRATED OSCILLATOR BE USED WITH SOME TYPE OF OUTPUT MEASURING DEVICE.

INTERMEDIATE ALIGNMENT:

1. Connect the high side of the test oscillator output to the control grid of the 1C6 modulator tube through a .02 Mfd. condenser. Leave the grid cap connected to the grid terminal of the tube, and connect the ground side of the test oscillator to the receiver ground.
2. Set the test oscillator frequency to 465 kilocycles (this must be accurate).
3. Align the second intermediate transformer by turning one of the trimmer screws accessible through holes in the top of the transformer shields up and down (increasing and decreasing capacity) until maximum reading is obtained on the output meter, after which adjust the other trimmer screws of the same transformer for maximum sensitivity.
4. Adjust the first intermediate transformer in the same manner as the second I.F. transformer.

TO ALIGN THE VARIABLE CONDENSER: It is important when aligning the gang condenser, padding and trimmer to follow the procedure carefully, otherwise the receiver will be insensitive and the dial calibration will be incorrect. The padding and trimmer condensers located underneath the chassis will be referred to by their function as indicated on the circuit diagram.

1. Connect the high output side of the test oscillator through a 400 ohm resistor to the receiver antenna lead and the low side to the set ground.
2. Place the band selector switch for operation on the 5.8 to 18 megacycle band, tune the receiver dial, and set the test oscillator frequency to EXACTLY 18 MEGACYCLES.

Rotate gang condenser so that plates are completely out of mesh and then tune in the 18 MEGACYCLE SIGNAL TO MAXIMUM OUTPUT BY ADJUSTING THE 18 MEGACYCLE OSCILLATOR TRIMMER. When adjusting this trimmer two peaks, the fundamental and the image peak will be noticed. CARE MUST BE TAKEN THAT THE FUNDAMENTAL PEAK AND NOT THE IMAGE PEAK IS USED FOR ALIGNING THE RECEIVER AT 18 MEGACYCLES. Always back off the trimmer to minimum capacity, then screw down the trimmer (add capacity) until the first peak which is the fundamental and the proper one to use is tuned in. If the trimmer is screwed down beyond the point where the first peak is received, the incorrect image peak will be tuned in. After completing adjustment of the oscillator trimmer at 18 megacycles always check to see if the proper peak has been used. To do this leave the test oscillator frequency at 18 megacycles, increase the output of the test oscillator and tune the receiver dial to approximately 17 megacycles. Then vary the receiver dial slightly to the right and left of 17 megacycles, and if the fundamental peak was used in aligning at 18 megacycles the test oscillator signal will be heard at approximately 17 megacycles on the receiver dial. If it is not possible to receive the signal, then the fundamental peak was not used and the 18 megacycle oscillator trimmer must be properly readjusted.

3. With band selector switch set for operation on 5.8 to 18 megacycle band tune the receiver dial and set test oscillator frequency to EXACTLY 16 MEGACYCLES and adjust 16 MEGACYCLE ANTENNA TRIMMER FOR MAXIMUM 16 MEGACYCLE SIGNAL SENSITIVITY.
4. Place band selector switch for operation on 1.8 to 5.8 megacycle band, tune the receiver dial, and set test oscillator frequency to EXACTLY 5.8 MEGACYCLES.

Rotate gang condenser so that plates are completely out of mesh and BRING IN 5.8 MEGACYCLE SIGNAL TO MAXIMUM OUTPUT BY ADJUSTING THE 5. MEGACYCLE OSCILLATOR TRIMMER.

5. Leave the band selector switch for operation on the 1.8 to 5.8 megacycle band and tune the receiver dial and set the test oscillator frequency to approximately 2 megacycles. While rocking the gang condenser slightly to the right and left, adjust the 2 megacycle oscillator padder condenser for maximum sensitivity.
6. Replace the 400 ohm resistor in series with test oscillator lead with a 200 mmfd. condenser, place the band selector switch for operation on the 535 to 1720 kilocycle band and set test oscillator frequency to EXACTLY 1720 KILOCYCLES.

Rotate gang condenser so that plates are completely out of mesh and BRING IN THE 1720 KILOCYCLE SIGNAL TO MAXIMUM OUTPUT by adjusting 1720 kilocycle oscillator trimmer.

7. With band selector switch placed for operation on the 535 to 1720 kilocycle band set test oscillator frequency and receiver dial to EXACTLY 1400 KILOCYCLES. Adjust 1400 kilocycle preselector and antenna trimmers for maximum 1400 kilocycle signal sensitivity.
8. Leave band selector switch for operation on 535 to 1720 kilocycle band, tune receiver dial and set test oscillator frequency to approximately 600 kilocycles. While rocking gang condenser slightly to right and left adjust 600 kilocycle oscillator padder for maximum sensitivity.

PRICES ARE SUBJECT TO CHANGE WITHOUT NOTICE

Part Number		List Price
2166	535-1720 K.C. Band Antenna and Preselector Coil	$1.30
2173	535-1720 K.C. Band Oscillator Coil	.65
2226	1.8-5.8 M.C. Band Antenna Coil	.70
2227	1.8-5.8 M.C. Band Oscillator Coil	.55
2009	5.8-18. M.C. Band Antenna Coil	.60
2065	5.8-18. M.C. Band Oscillator Coil	.65
2072	First I. F. Transformer	1.55
2259	Second I. F. Transformer	1.60
2158	Three Gang Condenser	3.60
2122	Tuning Dial Assembly	2.00
1054	Padding Condenser	.55
1055	Padding Condenser	.55
1331	Audio Transformer	1.40
1928	Bias Cell	.22
2282	Tone Control with Off and On Switch	1.24
2198	Volume Control	.85
2059	Wave Switch	.75
2272	8 & 20 Mfd. Dry Electrolytic Condenser	1.95
2268	Power Transformer	2.35
2271	Filter Choke	1.00
2066	R. F. Choke	.28
9530	R. F. "A" Choke	.15
2269	Vibrator	6.00
2273	Sponge Rubber Vibrator Pad	.10
2430	6.25 Ohm Wire Wound Resistor	.19
1942	500,000 Ohm 1/3 Watt Resistor	.19
1943	250,000 Ohm 1/3 Watt Resistor	.19
1944	100,000 Ohm 1/3 Watt Resistor	.19
7998	1 Meg Ohm 1/3 Watt Resistor	.19

Part Number		List Price
6984	500,000 Ohm 1/3 Watt Resistor	$ .19
6879	50,000 Ohm 1/3 Watt Resistor	.19
9693	5,000 Ohm 1/3 Watt Resistor	.19
9769	15,000 Ohm ½ Watt Resistor	.19
8907	25,000 Ohm 1/3 Watt Resistor	.19
9285	15,000 Ohm 1/3 Watt Resistor	.19
9431	100 Ohm 1/3 Watt Resistor	.19
9319	.001 Mfd. Moulded Condenser	.21
9458	.00025 Mfd. Moulded Condenser	.21
9459	.0005 Mfd. Moulded Condenser	.21
2132	.0027 Mfd. Moulded Condenser	.21
1628	.0045 Mfd. Moulded Condenser	.21
9386	.1 Mfd. 200 Volt Condenser	.19
9203	.1 Mfd. 400 Volt Condenser	.20
1147	.07 Mfd. 200 Volt Condenser	.19
8961	.05 Mfd. 400 Volt Condenser	.19
1551	.002 Mfd. 600 Volt Condenser	.18
1497	.03 Mfd. 600 Volt Condenser	.19
2275	.5 Mfd. 100 Volt Condenser	.50
1666	.03 Mfd. 600 Volt Condenser	.18
2073	.5 Mfd. 400 Volt Condenser	.56
2261	Battery Cable (Single Section)	.65
2262	Battery Clips	.17
8031	Black Rubber Sleeving	.10
8052	Red Rubber Sleeving	.10
1335	Six Inch Speaker	6.25
1353	Eight Inch Speaker	7.00
1739	13/16" Knobs	.22
1740	15/16" Knobs	.22
1794	15/16" Knobs	.25

©John F. Rider, Publisher

GAMBLE-SKOGMO, INC.

MODEL 34-2T
Schematic
Trimmers
Voltage

"Coronado" Model 34B1"

MODEL 54-BT
Alignment
Parts List

GAMBLE-SKOGMO, INC.

SERVICE NOTES
FOR THE
TWO BAND
SIX VOLT BATTERY OPERATED
FOUR TUBE SUPERHETERODYNE RECEIVER

ALIGNMENT PROCEDURE: REALIGNMENT OF THIS RECEIVER SHOULD NEVER BE NECESSARY UNLESS ONE OF THE OSCILLATOR, ANTENNA, OR I. F. COILS HAS BEEN REPLACED. LACK OF SENSITIVITY, SELECTIVITY, AND POOR TONE QUALITY MAY BE DUE TO ANY ONE OR A COMBINATION OF CAUSES, SUCH AS WEAK OR DEFECTIVE TUBES, BATTERY, OR SPEAKER, INADEQUATE OR EXCESSIVELY LONG ANTENNA, OPEN OR GROUNDED RESISTOR, BYPASS CONDENSER, ETC. UNDER NO CIRCUMSTANCES SHOULD REALIGNMENT BE ATTEMPTED UNTIL ALL OTHER POSSIBLE SOURCES HAVE BEEN FIRST THOROUGHLY INVESTIGATED AND HAVE BEEN DEFINITELY PROVEN NOT TO BE THE CAUSE. IF AN I. F. TUBE IS REPLACED IT IS ADVISABLE TO REALIGN THE I. F. AMPLIFIER, PARTICULARLY IF THE REPLACEMENT TUBE IS ONE OF A DIFFERENT MANUFACTURE THAN THE ONE IN THE RECEIVER. IT IS IMPORTANT WHEN ALIGNING TO CAREFULLY FOLLOW THE PROCEDURE IN THE ORDER GIVEN, OTHERWISE THE RECEIVER WILL LACK SENSITIVITY AND THE DIAL CALIBRATION WILL BE INCORRECT. IT IS IMPERATIVE THAT AN ACCURATELY CALIBRATED OSCILLATOR BE USED WITH SOME TYPE OF OUTPUT MEASURING DEVICE.

INTERMEDIATE ALIGNMENT:

1. CONNECT THE HIGH SIDE OF THE TEST OSCILLATOR OUTPUT TO THE CONTROL GRID OF THE 1C6 MODULATOR TUBE THROUGH A .02 MFD. CONDENSER. LEAVE THE GRID CAP CONNECTED TO THE GRID TERMINAL OF THE TUBE, AND CONNECT THE GROUND SIDE OF THE TEST OSCILLATOR TO THE RECEIVER GROUND.

2. SET THE TEST OSCILLATOR FREQUENCY TO 465 KILOCYCLES (THIS MUST BE ACCURATE).

3. ALIGN THE SECOND INTERMEDIATE TRANSFORMER BY TURNING ONE OF THE TRIMMER SCREWS ACCESSIBLE THROUGH HOLES IN THE TOP OF THE TRANSFORMER SHIELDS UP AND DOWN (INCREASING AND DECREASING CAPACITY) UNTIL MAXIMUM READING IS OBTAINED ON THE OUTPUT METER, AFTER WHICH ADJUST THE OTHER TRIMMER SCREW OF THE SAME TRANSFORMER FOR MAXIMUM SENSITIVITY.

4. ADJUST THE FIRST INTERMEDIATE TRANSFORMER IN THE SAME MANNER AS THE SECOND I. F. TRANSFORMER.

TO ALIGN THE VARIABLE CONDENSER: IT IS IMPORTANT WHEN ALIGNING THE GANG CONDENSER, PADDING CONDENSER, AND WAVE TRAP TO FOLLOW THE PROCEDURE CAREFULLY, OTHERWISE THE RECEIVER WILL BE INSENSITIVE AND THE DIAL CALIBRATION WILL BE INCORRECT. THE TRIMMER AND PADDING CONDENSER WILL BE REFERRED TO BY THEIR FUNCTION AS INDICATED ON THE CIRCUIT DIAGRAM.

1. CONNECT THE HIGH OUTPUT SIDE OF THE TEST OSCILLATOR THROUGH A .00025 MFD. CONDENSER TO THE RECEIVER ANTENNA LEAD AND THE LOW SIDE TO THE SET GROUND.

2. SOME CODE AND AIRCRAFT SIGNALS ARE BROADCAST ON A FREQUENCY THE SAME OR NEAR THE INTERMEDIATE FREQUENCY OF THE RECEIVER. TO ELIMINATE INTERFERENCE FROM THESE SIGNALS A 465 KILOCYCLE ANTENNA FILTER IS INCORPORATED IN THE RECEIVER. TO ADJUST, TUNE RECEIVER DIAL TO APPROXIMATELY 1000 KILOCYCLES AND SET TEST OSCILLATOR FREQUENCY TO EXACTLY 465 KILOCYCLES. THEN ADJUST THE 465 KILOCYCLE WAVE TRAP TRIMMER CONDENSER FOR MINIMUM 465 KILOCYCLE SIGNAL RESPONSE.

3. PLACE BAND SELECTOR SWITCH FOR OPERATION ON THE 1720-540 KILOCYCLE BAND, ROTATE GANG CONDENSER SO THAT PLATES ARE COMPLETELY OUT OF MESH, SET TEST OSCILLATOR FREQUENCY TO EXACTLY 1720 KILOCYCLES, AND ADJUST 1720 KILOCYCLE OSCILLATOR TRIMMER FOR MAXIMUM 1720 KILOCYCLE SIGNAL OUTPUT.

4. WITH BAND SELECTOR SWITCH SET FOR OPERATION ON THE 1720-540 KILOCYCLE BAND, SET THE TEST OSCILLATOR FREQUENCY AND RECEIVER TUNING DIAL TO EXACTLY 1400 KILOCYCLES. THEN ADJUST 1400 KILOCYCLE ANTENNA TRIMMER FOR MAXIMUM 1400 KILOCYCLE RESPONSE.

5. TUNE RECEIVER DIAL AND SET TEST OSCILLATOR FREQUENCY TO APPROXIMATELY 600 KILOCYCLES. WHILE ROCKING GANG CONDENSER SLIGHTLY TO RIGHT AND LEFT ADJUST 600 KILOCYCLE OSCILLATOR PADDER FOR MAXIMUM SENSITIVITY.

6. PLACE BAND SELECTOR SWITCH FOR OPERATION ON THE 2.3-6.2 MEGACYCLE BAND, ROTATE GANG CONDENSER SO PLATES ARE COMPLETELY OUT OF MESH, AND SET TEST OSCILLATOR FREQUENCY TO EXACTLY 6.3 MEGACYCLES. BRING IN 6.3 MEGACYCLE SIGNAL TO MAXIMUM OUTPUT WITH 6.3 MEGACYCLE OSCILLATOR TRIMMER.

7. WITH BAND SELECTOR SWITCH ON 2.3-6.3 MEGACYCLE BAND SET RECEIVER DIAL AND TEST OSCILLATOR FREQUENCY TO EXACTLY 5.8 MEGACYCLES. ADJUST 5.8 MEGACYCLE ANTENNA TRIMMER FOR MAXIMUM 5.8 MEGACYCLE SIGNAL RESPONSE.

8. LEAVE BAND SELECTOR SWITCH FOR OPERATION ON THE 2.3-6.3 MEGACYCLE BAND, TUNE RECEIVER DIAL AND SET TEST OSCILLATOR FREQUENCY TO APPROXIMATELY 2.5 MEGACYCLES. THEN WHILE ROCKING GANG CONDENSER SLIGHTLY TO RIGHT AND LEFT ADJUST 2.5 MEGACYCLE PADDING CONDENSER FOR MAXIMUM SENSITIVITY.

PRICES ARE SUBJECT TO CHANGE WITHOUT NOTICE

PART NUMBER		LIST PRICE	PART NUMBER		LIST PRICE
2252	ANTENNA FILTER COIL	$ .65	8907	25,000 OHM 1/3 WATT RESISTOR	$ .19
2185	540 TO 1720 KILOCYCLE BAND ANTENNA COIL	.80	6786	10,000 OHM 1/3 WATT RESISTOR	.19
2167	540 TO 1720 KILOCYCLE BAND OSCILLATOR COIL	.55	9765	15,000 OHM 1/2 WATT RESISTOR	.19
2186	2.4 TO 6.2 MEGACYCLE BAND ANTENNA COIL	.70	1176	10,000 OHM 1/2 WATT RESISTOR	.19
2187	2.4 TO 6.2 MEGACYCLE BAND OSCILLATOR COIL	.35	9706	1,500 OHM 1/3 WATT RESISTOR	.19
2072	FIRST I. F. TRANSFORMER	1.55	1054	PADDING CONDENSER	.55
2259	SECOND I. F. TRANSFORMER	1.60	1055	PADDING CONDENSER	.55
2053	TWO GANG CONDENSER	2.65	8876	5 MFD. DRY ELECTROLYTIC CONDENSER	.85
2121	TUNING DIAL ASSEMBLY COMPLETE	2.25	9468	.00025 MFD. MOULDED CONDENSER	.21
2260	VOLUME CONTROL WITH SWITCH	1.20	9459	.0005 MFD. MOULDED CONDENSER	.21
2239	TONE CONTROL	.80	7934	.0001 MFD. MOULDED CONDENSER	.21
2165	WAVE SWITCH	.70	1628	.0045 MFD. MOULDED CONDENSER	.21
2047	BIAS CELL MOUNTING STRIP	.11	1666	.02 MFD. 600 VOLT CONDENSER	.18
1928	BIAS CELL	.22	2275	.5 MFD. 200 VOLT CONDENSER	.50
2268	POWER TRANSFORMER	2.35	9386	.1 MFD. 200 VOLT CONDENSER	.19
2271	FILTER CHOKE	1.00	1147	.05 MFD. 200 VOLT CONDENSER	.17
9539	R.F. "A" CHOKE	.46	1148	.5 MFD. 200 VOLT CONDENSER	.40
2066	R.F. CHOKE	.28	9032	.2 MFD. 200 VOLT CONDENSER	.23
2269	VIBRATOR	6.00	2261	BATTERY CABLE (SINGLE SECTION)	.65
2273	SPONGE RUBBER VIBRATOR PAD	.10	2262	BATTERY CLIPS	.17
2258	WIRE WOUND RESISTOR STRIP	.40	8051	BLACK RUBBER SLEEVING	.10
1942	500,000 OHM 1/3 WATT RESISTOR	.19	8052	RED RUBBER SLEEVING	.10
1948	250,000 OHM 1/3 WATT RESISTOR	.19	2277	6" MAGNETIC SPEAKER	6.00
7998	1 MEGOHM 1/3 WATT RESISTOR	.19	2278	8" MAGNETIC SPEAKER	6.75
8000	100,000 OHM 1/3 WATT RESISTOR	.19	1740	15/16" KNOBS	.22
6879	50,000 OHM 1/3 WATT RESISTOR	.19	1739	13/16" KNOBS	.22
			9025	6.3 VOLT .15 AMPERE PILOT LIGHT	.19

©John F Rider, Publisher

GAMBLE-SKOGMO, INC.

MODEL 36-L
Schematic
Socket, Trimmer
Voltage

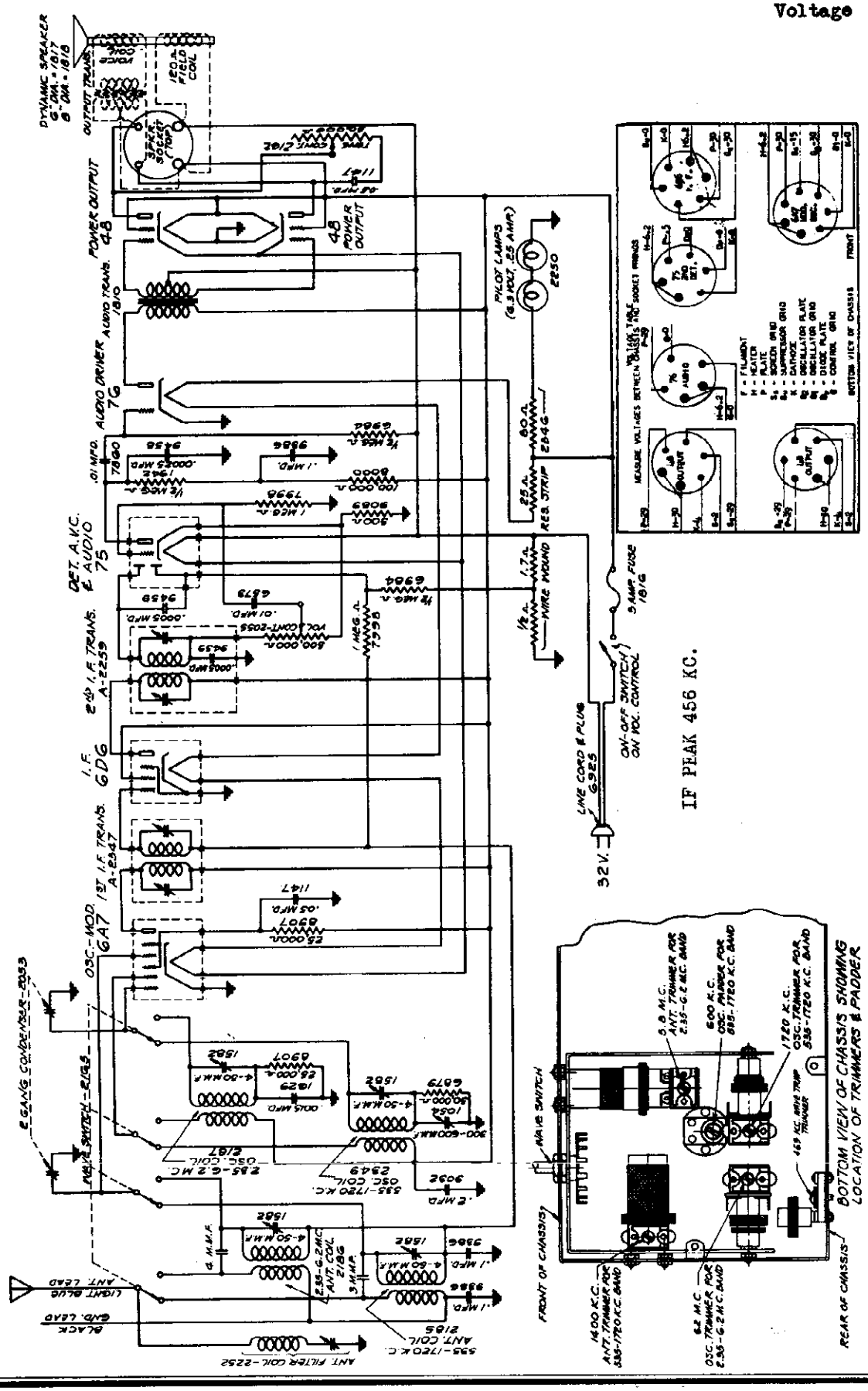

MODEL 36-L
Alignment
Voltage,Parts

GAMBLE-SKOGMO, INC.

Service Notes For The Two Band Thirty-Two Volt Six Tube Superheterodyne Receiver

ALIGNMENT PROCEDURE: Realignment of this receiver should never be necessary unless one of the oscillator, antenna or I. F. coils has been replaced. Lack of sensitivity, selectivity, and poor tone quality may be due to any one or a combination of causes, such as weak or defective tubes, battery, or speaker, inadequate or excessively long antenna, open or grounded resistor, bypass condenser, etc. Under no circumstances should realignment be attempted until all other possible sources have been first thoroughly investigated and have been definitely proven not to be the cause. If an I. F. tube is replaced it is advisable to realign the I. F. amplifier, particularly if the replacement tube is one of a different manufacture than the one in the receiver. It is important when aligning to carefully follow the procedure in the order given, otherwise the receiver will lack sensitivity and the dial calibration will be incorrect.

It is imperative that an accurately calibrated oscillator be used with some type of output measuring device.

INTERMEDIATE ALIGNMENT:

1. Connect the high side of the test oscillator output to the control grid of the 6A7 oscillator modulator tube through a .02 mfd. condenser. Leave the grid cap connected to the grid terminal of the tube, and connect the ground side of the test oscillator to the receiver ground.

2. Set the test oscillator frequency to 465 kilocycles (this must be accurate).

3. Align the second intermediate transformer by turning one of the trimmer screws accessible through holes in the top of the transformer shields up and down (increasing and decreasing capacity) until maximum reading is obtained on the output meter, after which adjust the other trimmer screw of the same transformer for maximum sensitivity.

4. Adjust the first intermediate transformer in the same manner as the second I. F. transformer.

TO ALIGN THE VARIABLE CONDENSER: It is important when aligning the gang condenser, padding condenser, and wave trap to follow the procedure carefully, otherwise the receiver will be insensitive and the dial calibration will be incorrect. The trimmer and padding condenser will be referred to by their function as indicated on the circuit diagram.

1. Connect the high output side of the test oscillator through a .00025 mfd. condenser to the receiver antenna lead and the low side to the set ground.

2. Some code and aircraft signals are broadcast on a frequency the same or near the intermediate frequency of the receiver. To eliminate interference from these signals a 465 kilocycle antenna filter is incorporated in the receiver. To adjust, tune receiver dial to approximately 1000 kilocycles and set test oscillator frequency to exactly 465 kilocycles. Then adjust the 465 kilocycle wave trap trimmer condenser for minimum 465 kilocycle signal response.

3. Place band selector switch for operation on the 1720-540 kilocycle band, rotate gang condenser so that plates are completely out of mesh, set test oscillator frequency to exactly 1720 kilocycles, and adjust 1720 kilocycle oscillator trimmer for maximum 1720 kilocycle signal output.

4. With band selector switch set for operation on the 1720-540 kilocycle band, set the test oscillator frequency and receiver tuning dial to EXACTLY 1400 KILOCYCLES, then adjust 1400 kilocycle antenna trimmer for maximum 1400 kilocycle signal response.

5. With band selector switch set for operation on the 1720-540 kilocycle band, tune receiver dial and set test oscillator frequency to approximately 600 kilocycles. While rocking gang condenser slightly to right and left adjust 600 kilocycle oscillator padder for maximum sensitivity.

6. Place band selector switch for operation on the 2.35-6.2 megacycle band, rotate gang condenser so plates are completely out of mesh, and set test oscillator frequency to exactly 6.2 megacycles. Bring in 6.2 megacycle signal to maximum output with 6.2 megacycle oscillator trimmer.

7. With band selector switch on 2.35-6.2 megacycle band set receiver dial and test oscillator frequency to exactly 5.8 megacycles. Adjust 5.8 megacycle antenna trimmer for maximum 5.8 megacycle signal response.

VOLTAGE TABLE

Tube		Filament	Plate	Screen	Cathode	Grid No. 2	Grid No. 3 & 5
6A7	1st Detector and Oscillator	6	32		.5	32	15
6D6	I. F. Amplifier	6	32	32	.6		
75	2nd Detector and A.V.C.	6	5*				
76	1st Audio	6	30				
48	Output	6	30	32	5		
48	Output	6	30	32	5		

*Triode plate comparative voltage only. Read all voltages from socket to chassis. PRICES ARE SUBJECT TO CHANGE WITHOUT NOTICE

Part Number		List Price
2252	Antenna Filter Coil	$0.65
2185	540-1720 Kilocycle Band Antenna Coil	.80
2349	540-1720 Kilocycle Band Oscillator Coil	.65
2186	2.35-6.2 Megacycle Band Antenna Coil	.70
2187	2.35-6.2 Megacycle Band Oscillator Coil	.55
2347	First I. F. Transformer	1.65
2259	Second I. F. Transformer	1.60
2053	Two Gang Condenser	2.65
2165	Wave Switch	.70
2111	Tuning Dial Assembly Complete	2.25
2112	Calibrated Dial Scale	.30
2250	Pilot Lamp Bulb 6.3 Volt .25 Ampere	.19
2055	Volume Control With Off and On Switch	1.10
2162	Tone Control	.80
1810	Audio Transformer	1.75
1054	Padding Condenser	.55
1582	Trimmer Condenser	.21
2346	Wire Wound Resistor Strip	.75
7998	1 Meg Ohm ½ Watt Resistor	.19
6984	500,000 Ohm ½ Watt Resistor	.19
8000	100,000 Ohm ½ Watt Resistor	.19
6879	50,000 Ohm ½ Watt Resistor	.19
8907	25,000 Ohm ½ Watt Resistor	.19
9089	500 Ohm ½ Watt Resistor	.19
1942	500,000 Ohm ½ Watt Resistor Insulated Type	.19
6573	.01 Mfd. 200 Volt Condenser	.17
7860	.01 Mfd. 400 Volt Condenser	.17
9386	.1 Mfd. 200 Volt Condenser	.19
9032	.2 Mfd. 200 Volt Condenser	.23
1147	.05 Mfd. 200 Volt Condenser	.19
9459	.0005 Mfd. Moulded Condenser	.21
9458	.00025 Mfd. Moulded Condenser	.21
1629	.001 Mfd. Moulded Condenser	.21
1548	Fuse Block Receptacle	.25
1816	Fuse	.12
1817	Six Inch Dynamic Speaker	7.25
1818	Eight Inch Dynamic Speaker	9.00
1740	15/16" Knob	.22
1739	13/16" Knob	.22

©John F. Rider Publisher

GAMBLE-SKOGMO, INC.

MODEL 46-1-1
Schematic
Socket, Trimmers
Coil Data

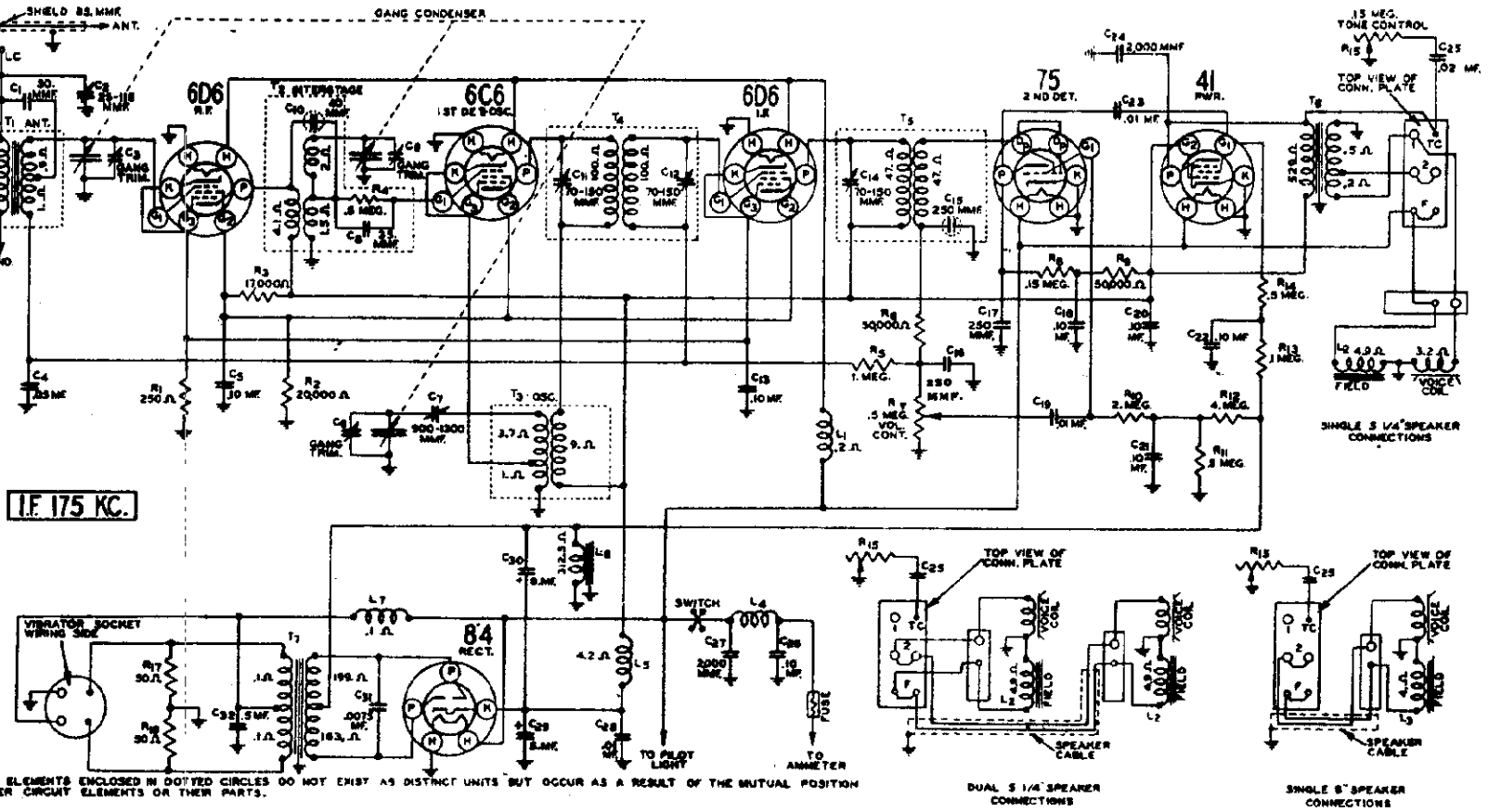

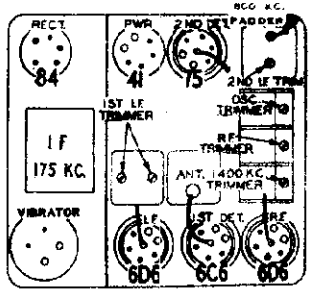

Fig. 2—Location of Tubes and Vibrator

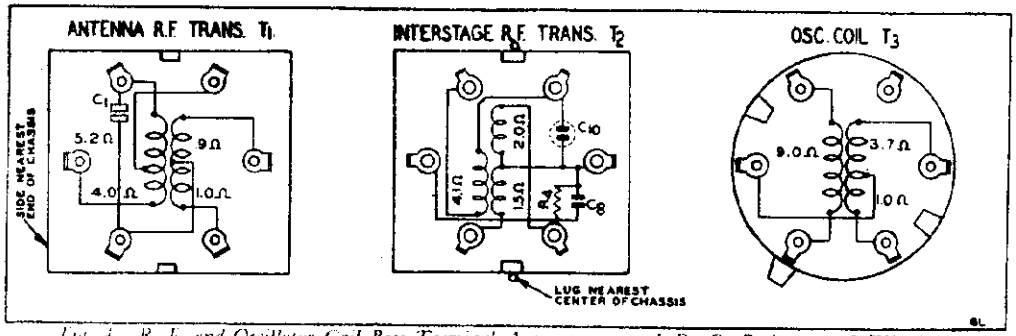

Fig. 4—R. F. and Oscillator Coil Base Terminal Arrangement and D. C. Resistance of Windings

©John F. Rider, Publisher

6 Tube
Automobile Radio

June 1936

This model is a 6 tube automobile radio covering the standard wave band. It has a tuning range as shown in the specifications above. The signal is fed through an antenna transformer with tuned secondary into a 6D6 tube which functions as an R.F. amplifier. A tapped connection is provided in the primary of the antenna transformer for installations in cars in which a high capacity antenna is used.

The output of the R.F. tube is fed through another R. F. transformer with tuned secondary into a 6C6 tube which functions as the first detector and oscillator. The oscillating circuit is tuned by the oscillator section of the gang condenser and is always resonant at a frequency 175 KC above the frequency to which the R.F. circuits are tuned.

One stage of I.F. amplification is employed using a 6D6 tube. The primary and secondary of the first I.F. transformer and the primary of the second I.F. transformer are tuned by small trimmer condensers.

A 75 dual diode-triode tube functions as a diode 2nd detector, AVC tube and a one stage audio amplifier. AVC voltage is applied to the control grid circuits of the 6D6 R.F. and I.F. tubes. The manual volume control varies the audio voltage applied to the grid of the 75 tube.

In the output stage a 41 tube is employed. A dynamic reproducer is used. Provision is made for a single roof speaker and dual speaker (chassis and roof) connections. The electrical connections for the different speaker installations are shown in the schematic. For the single 8 inch or dual 5¼ inch speakers, the tapped connection of the output transformer secondary is used.

The vibrator in the power unit interrupts the current through the primary of the power transformer. The use of a vibrating interrupter in the primary circuit and a high ratio transformer results in the application of high voltage AC to the rectifier tube plates. The 84 full wave rectifier tube, filter choke and filter condensers convert this high voltage AC into high voltage DC for the plate and screen circuits

Alignment and Calibration

Misalignment of condensers generally manifests itself as broad tuning and lack of volume at portions or all of the standard wave band. The receivers are all properly aligned at the factory with precision instruments and realignment should not be attempted unless all other possible causes of the faulty operation have first been investigated and unless the service technician has the proper equipment.

A signal generator that will provide accurately calibrated signals over the standard wave band and at the intermediate frequency, and an output meter are required for indicating the effect of adjustments.

Use a non-metallic screwdriver for the adjustments. The complete procedure is as follows:

I. F. Adjustment

Set the signal generator for a signal of 175 KC.

Connect the output of the signal generator through a .05 mf. condenser to the stator of the R. F. interstage section of the tuning condenser. (See Fig. 2 for location of this section.)

Connect the ground lead of the signal generator to the chassis ground.

Set the volume control at the maximum position.

Attenuate the signal from the signal generator to prevent the levelling-off action of the AVC.

Then adjust the three I.F. trimmers until maximum output is obtained. The location of these trimmers is shown in Fig. 2.

1575 KC Adjustment

Set the signal generator for 1575 KC.

Turn the rotor of the tuning condenser to the full open position.

If a low capacity antenna is used, connect the shielded antenna lead from the chassis through a 130 mmf. condenser to the antenna post of the signal generator. (If high capacity, use 1500 mmf.)

For this and all subsequent adjustments keep the volume control at the maximum position and attenuate the signal from the signal generator to prevent AVC action.

Adjust the trimmer of the oscillator section of the three gang condenser until maximum output is obtained—see Fig. 2 for location of this trimmer.

1400 KC Adjustment

Set the signal generator for 1400 KC.

Turn the rotor of the tuning condenser carefully until maximum output is obtained.

Adjust the R.F. interstage and antenna 1400 KC trimmers for maximum output.

Do not change the setting of the oscillator trimmer.

600 KC Adjustment

Set the signal generator for 600 KC.

Connect the output of the signal generator through a .05 mf. condenser to the control grid of the 6D6 R.F. tube.

Turn the tuning condenser rotor until maximum output is obtained. Then turn the tuning condenser rotor back and forth, at the same time adjusting the 600 KC padder (see Fig. 2) until the peak of greatest intensity is obtained.

Re-connect the output of the signal generator to the shielded antenna lead.

Adjust the 600 KC antenna trimmer to maximum. This trimmer is reached from the outside of the case —see Fig. 3.

Adjusting Antenna 600 KC Trimmer

After the receiver is installed and the car antenna is connected, it will be necessary to adjust the antenna trimmer. Tune in a weak signal at approximately 600 KC with the volume control about three-fourths on. Turn the adjusting screw of the antenna 600 KC trimmer up or down until maximum output is obtained. See Fig. 3 for location of this trimmer.

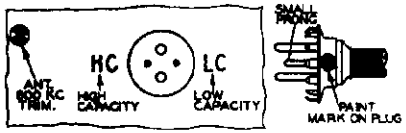

Fig. 3—Antenna Plug Insertion

Calibrating the Receiver

To calibrate the receiver, tune in a station of known frequency. At the back of the control head is the calibration screw. Remove the pilot lamp assembly. Insert a fine blade screwdriver and turn this screw until the pointer on the dial scale is at the frequency of the station being received. The knob must be held during this adjustment.

If the control head is inaccessible it may be calibrated by setting the pointer from the front. Remove the crystal by inserting a knife blade under the lower edge. Loosen the pointer screw, set the pointer and retighten.

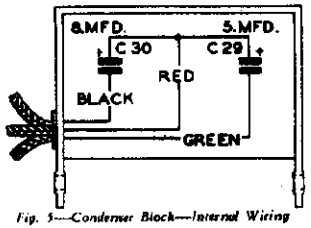

Fig. 5—Condenser Block—Internal Wiring

Antenna Disconnected		Battery 6 Volts Under Load			
Type of Tube	Function	Across Heater	Plate to Ground	Screen to Ground	Cathode to Ground
6D6	R.F.	6	233	103	4.0
6C6	1st Det. & Osc.	6	233	103	
6D6	I.F.	6	233	103	4.0
75	2nd Det.	6	130		
41	Power	6	215	233	16.0(1)
84	Rectifier	6	560(2)		

(1) Grid bias read across filter choke L6
(2) Plate to Plate A.C. voltage

Roof Speaker

The Ford and General Motors 1936 automobiles have provision for mounting a speaker in the car roof (Ford 5¼ inch speaker, General Motors 5¼ or 8 inch speaker). This model is so designed that roof speaker installations in those cars can readily be made.

There are three general types of speaker installation. In the first type of installation the single 5¼ inch speaker attached to the chassis cover is used.

Instrument Panel Mounting Kits

Car	Year & Model		Panel Kit No.
Buick	1936		*21A16
Cadillac	1936		*21A39
Chevrolet	1936-35	Standard & Master	‡21A11
	1936	Six	*21A19
Chrysler	1936	Eight	*21A30
	1936	Airflow	*21A31
	1935-34	Except Imperial	*21A47
DeSoto	1936	Airflow & Airstream Custom	*21A22
		Airstream DeLuxe	*21A26
	1935	DeLuxe	*21A46
	1934		*21A47
Dodge	1936	DeLuxe	*21A13
	1935		*21A48
	1934		*21A49
Plymouth	1936	DeLuxe	‡21A12
	1936-35	Standard	*21A37
	1935	DeLuxe	*21A33
	1934		*21A49
Pontiac	1936-35	Standard-DeLuxe 6 & 8	‡21A15
Studebaker	1936	Dictator	*21A20
		President	*21A24
Terraplane	1936		*21A18
	1935		*21A48
	1934		*21A35
Steering column and under panel kit.			‡21A23
Ford	1936	Standard & DeLuxe	‡21A10
	1935	DeLuxe	
		Standard	*21A32
	1934		*21A38
Hudson	1936		*21A17
	1935		*21A48
	1934		*21A38
Lafayette	1936-35		*21A50
LaSalle	1936		‡21A40
Lincoln	Zephyr 1936		‡21A10
Nash	1936-35		*21A36
Oldsmobile	1936		*21A14
	1935		*21A34
Packard	1936	120-B	*21A21
	1935	120	*21A41

In the second type of installation a single 5¼ inch or 8 inch roof speaker is used. The third type of installation is the dual speaker mounting using two 5¼ inch speakers, one in the car roof and the other on the chassis cover. (The 8 inch and 5¼ inch speakers cannot be used together).

The electrical connections of the different speaker installations are shown in the schematic—Fig. 1. Complete information regarding the method of making the installations and the kits of parts required are in the installation manual packed with each radio.

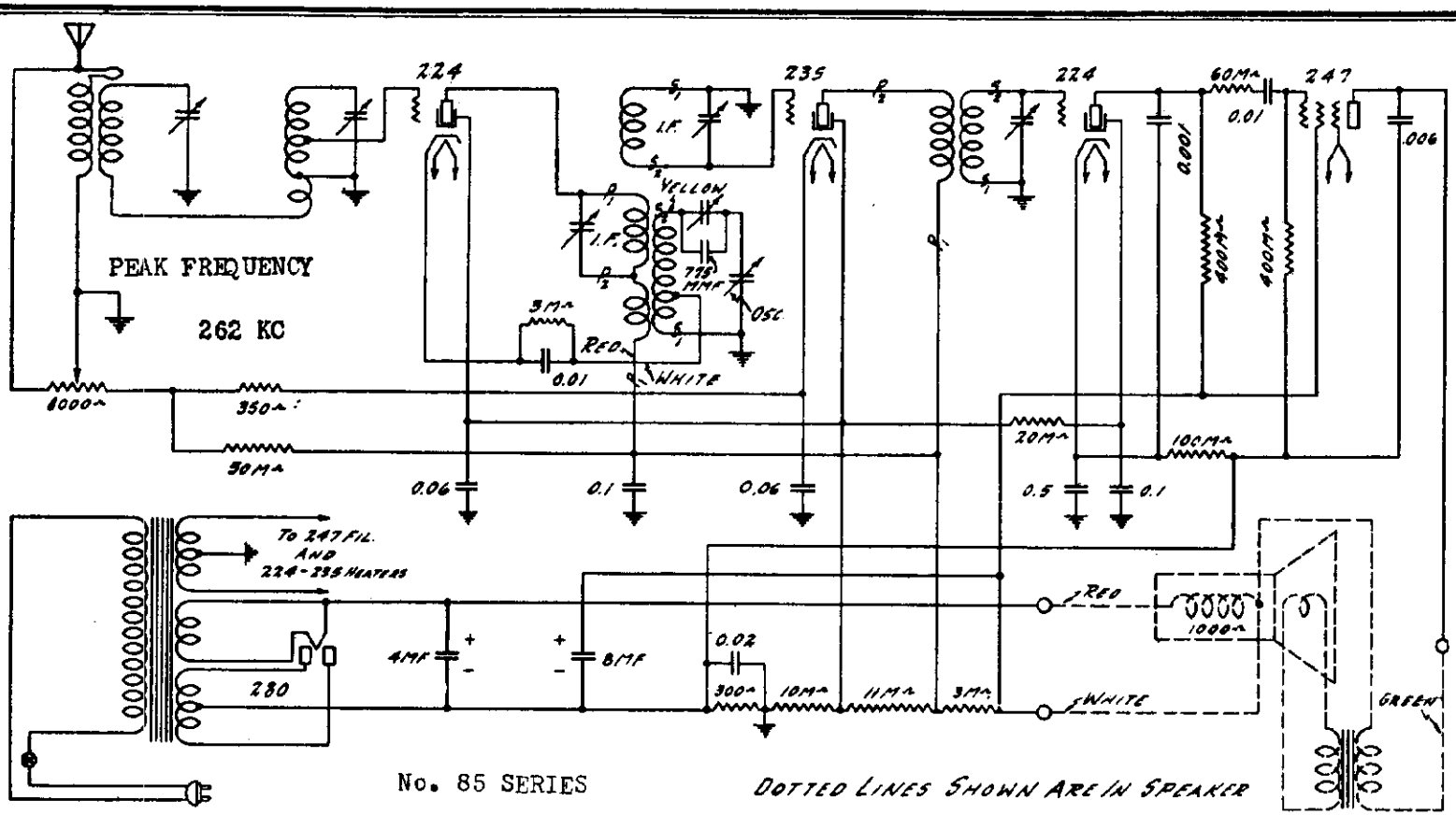

No. 85 SERIES

DOTTED LINES SHOWN ARE IN SPEAKER

GAMBLE-SKOGMO, INC.

There are certain features to be noted in this receiver. The mixer is of the autodyne type, wherein it functions as a mixer (1st detector) and also as an oscillator. Also that the grid lead from the mixer tube joins the grid coil at a tap upon this winding. This tap is so apportioned that the circuit acts to suppress the tranmission of image frequency signals, in this case 524 KC higher than the frequency setting of the tuned circuit. The IF transformer is also of special structure combining the coupling transformer and also the oscillator system. The structure of this transformer-oscillator is illustrated upon the next page.

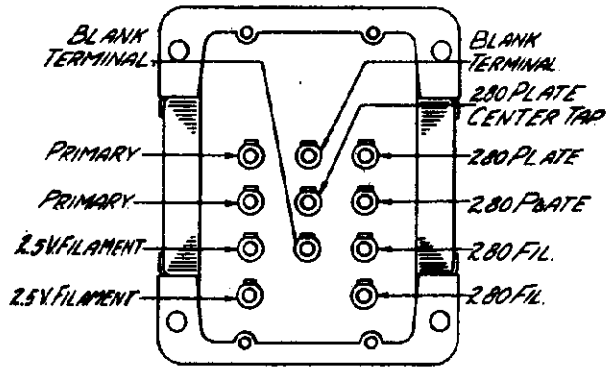

Power Transformer Terminals

MODEL 85
Schematic
Socket

©John F. Rider, Publisher

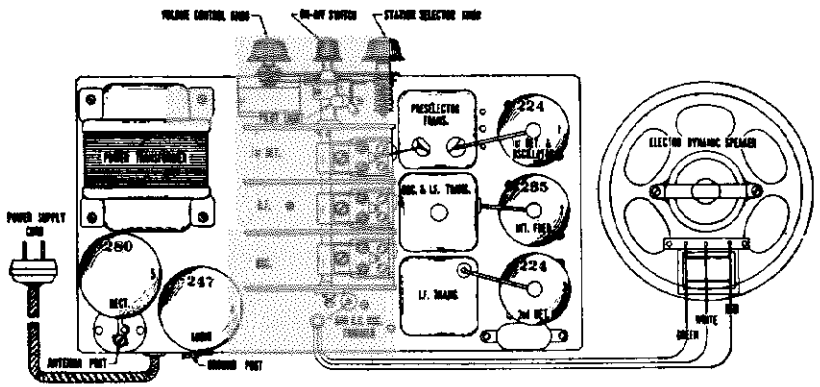

Top View *Chassis showing Tube Sequence and Speaker Connections.*

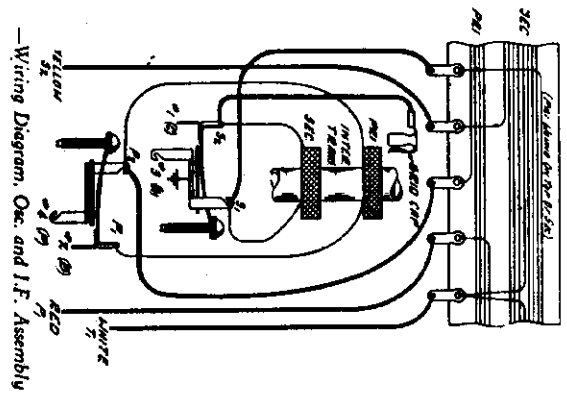

VOLTAGES AT SOCKETS
LINE VOLTAGE 115—VOLUME CONTROL AT MAXIMUM

Type of Tube	Position of Tube	Function	"A" Volts	"B" Volts	Control Grid "C" Volts	Screen Volts	Screen Current MA	Cathode Volts	Plate MA	Grid Test MA
224	1	1st Det. & Osc.	2.25	165	4.5–5.25(1)	65	.4	4.5–5.25(1)	1.3	2.0
235	2	I.F.	2.25	165	2.5	65	1.5	2.5	6.4	7.4
224	3	2nd Det.	2.25	125	6.5	60(3)	.05	6.5	.22	.23
247	4	Audio	2.25	205	16. (2)	225	8.0		29.	33.
280	5	Rect.	4.9						27. Per Plate	

(1) Varies with frequency setting of dial approximately as shown.
(2) Voltage as measured with 600,000 ohm meter.
(3) Measured across 300 ohm section of voltage divider resistor.

CONDENSER ALIGNMENT

Aligning Intermediate Condensers—A nonmetallic screw driver is necessary for aligning the intermediate condensers. A signal of 262 K.C. is required. Remove the grid cap from the grid connection of the 224 1st detector tube and connect the lead from the signal generator to the grid of the 224 1st detector. The tube shield should be left on. One way to make this connection is to bring the antenna lead from the signal generator through the slot in the shield for the grid wire. A grid cap on the end of the antenna lead of the signal generator will facilitate making this connection. This lead, of course, should be insulated.

The oscillator coil must be shorted out by grounding the lead from the tap on the secondary. This is the white lead which comes through the porcelain base of the oscillator and I.F. assembly. This lead terminates at a lug on a vertically mounted bakelite terminal strip. Connect the jumper from this lug to the ground Connect the ground lead from the signal generator to the ground post of the chassis.

The intermediate condenser adjusting screws are reached from the bottom of the chassis. There are two on the porcelain base of the oscillator and 1st I.F. transformer assembly, Part No. 3382 and one on the porcelain base of the 2nd I.F. transformer assembly, Part No. 3388. The volume control should be at maximum setting. Then adjust the three intermediate condenser screws until maximum output is obtained on the output meter. After all three have been adjusted the first time, go over them again and check the setting for maximum output.

Aligning R.F. and Oscillator Condensers—For adjusting the R.F. and oscillator condensers the signal input from the signal generator should be made to the antenna post. Adjust the signal generator for a signal of exactly 1400 K.C. Then turn the tuning condenser rotor until the pointer is at exactly 1400 on the dial scale. Then adjust the three trimmers on the tuning condenser for maximum output adjusting the oscillator trimmer first (trimmer nearest back of chassis). Turn the screws up or down until greatest deflection on output indicating meter is obtained.

Then set the signal generator for a signal of 600 K.C. and turn the tuning condenser rotor until the output is at maximum. The next step is to adjust the oscillator 600 K.C. trimmer condenser. The adjusting screw for this condenser is in back of the tuning condenser and is reached from the top of the chassis. To correctly adjust this oscillator 600 K.C. trimmer it will be necessary to turn the screw to several different positions using a nonmetallic screw driver. At every position of this adjusting screw turn the tuning condenser rotor until maximum output is obtained. For each position of the adjusting screw there will be a maximum output and the correct position of the adjusting screw is the setting at which the deflection on output indicating meter is the greatest.

Next set the signal generator again for a 1400 K.C. signal and check the adjustment of the tuning condenser trimmers at this frequency for maximum output. Then set the signal generator for a signal of 1000 K.C. and turn the tuning condenser rotor until the output indicating meter shows maximum deflection. Then bend the slotted rotor plate sections of each tuning condenser bank which are last in mesh, in or out until maximum output is obtained. Tune in a signal at 750 K.C. and then at 600 K.C. and follow the same procedure bending the rotor plate sections last in mesh until maximum output is obtained. Do not change the setting of the oscillator 600 K.C. trimmer in any way after it has once been set as indicated above.

FLUTTERING OR MOTORBOATING

Fluttering or motorboating may be due to an open 8 Mfd. electrolytic filter condenser or to low capacity in this condenser. It may also be due to an open or low capacity .06 Mfd. screen by-pass condenser. If the 4 and 8 Mfd. electrolytic condenser units are reversed in position fluttering may result. The correct position of these two units is shown in Fig. 1.

A 224 1st detector with characteristics varying considerably from the standard may cause fluttering. Try out some new 224 tubes in this socket. A defective oscillator and 1st I.F transformer assembly may also be responsible for this type of disturbance. If, after the tubes have been changed and the other possibilities suggested in this article have been investigated, fluttering persists, it may be advisable to secure a new oscillator and 1st I.F. transformer assembly and try it out in the receiver. Motorboating may be due to a poor grid connection to the 235 I.F. tube and to the 224 2nd detector.

ELECTROLYTIC FILTER CONDENSERS

There are two dry electrolytic condenser units in the No. 99 chassis. One of these units is an 8 Mfd., 450 volt condenser, Part No. 2803. The other unit is a 4 Mfd., 450 volt condenser, Part No. 3366.

In replacing the electrolytic condenser units great care should be taken to wire them in with the correct polarity. Tag the leads when they are taken off the old condensers. The positive terminal of the condenser is identified by a + symbol on the box. The positive lead in the chassis can be determined by referring to the schematic circuit diagram.

©John F. Rider, Publisher

MODELS 400A-410B

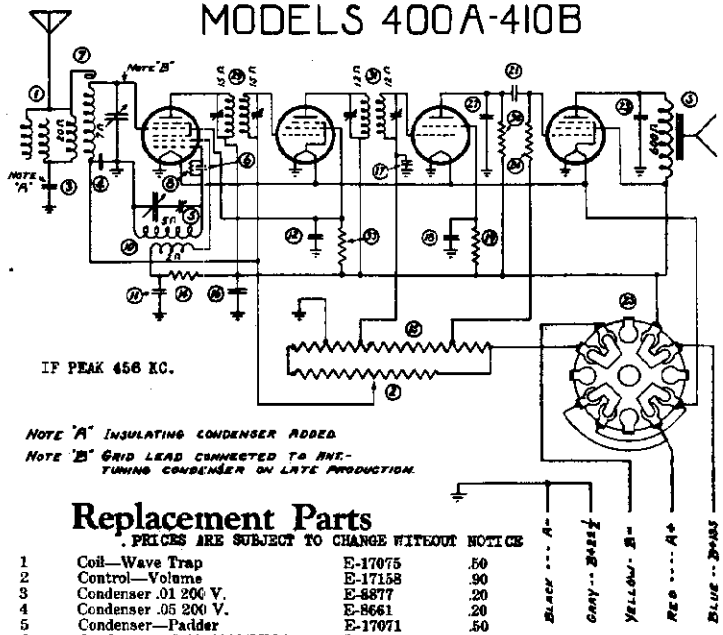

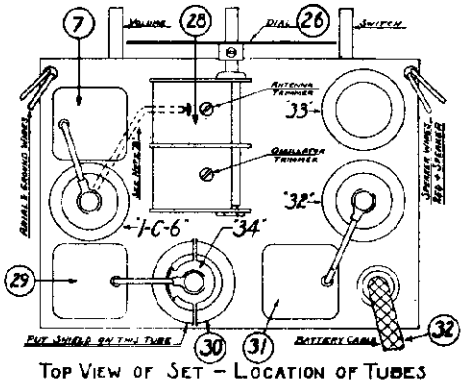

TOP VIEW OF SET – LOCATION OF TUBES

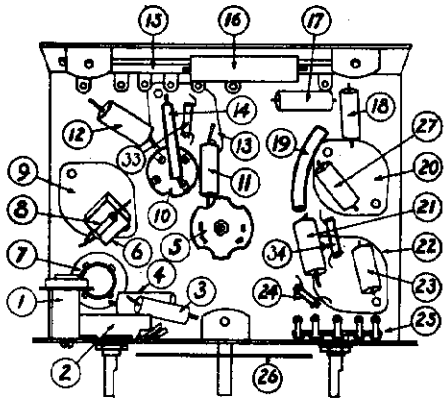

Replacement Parts

PRICES ARE SUBJECT TO CHANGE WITHOUT NOTICE

1	Coil—Wave Trap	E-17075	.50
2	Control—Volume	E-17158	.90
3	Condenser .01 200 V.	E-8877	.20
4	Condenser .05 200 V.	E-8661	.20
5	Condenser—Padder	E-17071	.50
6	Condenser—Grid .0002 MICA	E-8873	.20
7	Coil—Antenna	E-17156	.90
8	Register—OSC. GRID. 50,000	E-8601	.20
9	Socket "1-C-6"	E-17168	.20
10	Coil—Oscillator	E-17155	.60
11	Condenser .01 400 V.	E-8583	.20
12	Condenser .05 200 V.	E-8661	.20
13	Socket "34"	E-17166	.20
14	Resistor 15,000	E-17164	.20
15	Resistor Strip	E-17184	.70
16	Condenser .25 200 V.	E-17128	.30
17	Condenser .05 200 V.	E-8661	.20
18	Condenser .01 400 V.	E-8583	.20
19	Resistor 2,000,000	E-8887	.20
20	Socket "32"	E-17165	.20
21	Condenser .01 400 V.	E-8583	.20
22	Socket "33"	E-17167	.20
23	Condenser .002 800 V.	E-17002	.20
24	Resistor 500,000	E-8886	.20
25	Switch—Battery	E-17173	.70
26	Dial	E-17160	.50
27	Condenser .001 600 V.	E-8585	.20
28	Condenser—Tuning	E-17172	2.10
29	Transformer—I. F. INPUT	E-17194	1.50
30	Shield—34 Tube	E-17170	.30
31	Transformer—I. F. OUTPUT	E-17073	1.50
32	Cable—Battery, with Terminals	E-17199	.70
33	Resistor 15,000	E-17164	.20
34	Resistor 250,000	E-8602	.20
	Cabinet—Model 400A	E-17027	6.20
	Cabinet—Model 400A	E-17027	5.20
	Cabinet—Model 410B	E-17227	14.00
	Speaker—Model 400A	E-17169	8.50
	Speaker—Model 410B	E-17223	4.00
	Knobs—Tuning	E-17114	.20
	Terminals—for Battery Cable	E-17185	.04

Type 1-C-6 as Det. OSC.
34 as I. F.
32 as 2nd. Det.
33 as Output.

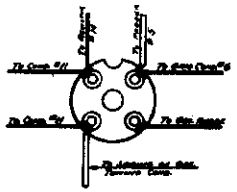

OSCILLATOR COIL

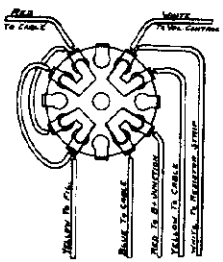

SWITCH WIRING
SHOWN IN "ON" POSITION

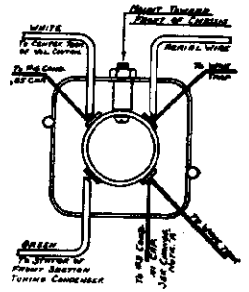

ANTENNA COIL.

Alignment Proceedure

Do not attempt the complete alignment of this set without having a reliable test oscillator or signal generator. Before making any adjustments always be sure that everything has been checked that is mentioned in the section above under "Possible Sources of Trouble."

I. F. alignment—connect the signal generator lead to the grid of the 1-C-6 tube. The ground lead from the signal generator should be connected to the chassis. Connect an output meter on the speaker. Turn tuning condenser open. Set signal generator to 456, attenuating enough so that set does not overload. "Peak" I. F. trimmers—using as low a signal as will give a readable output, going over them at least twice.

Padder Condenser.

Place set in operation and connect signal generator to antenna lead. Close tuning condenser. Set signal generator for 530 K. C. and adjust padder for maximum signal.

Trimmer Condensers.

Open tuning condenser. Leave signal generator connected as above and set for 1730 K. C.—adjust oscillator trimmer (rear section) for maximum.

Change signal generator to 1200 K. C. and tune this in on set, then adjust antenna trimmer for maximum.

Possible Sources of Trouble

1. **Weak volume**, antenna lightning arrestor shorted, exhausted batteries either "A" or "B", weak tubes, tube shield on 34 tube not grounded, defective part—in set—check circuits. Set out of alignment—see paragraph below before attempting to align.

2. **Distorted reproduction**—defective tubes, weak batteries, shorted or open condenser or resistor in set. Defective speaker.

3. **Oscillation—set may "whistle" when tuning in a station and volume** may be low,—tube shield on 34 tube not making contact with ground clip, defective 34 tube, speaker wires close to 32 tube.

4. **Set does not operate at all**—if tubes and batteries have been checked, it is probable that some part has failed or some wire is shorted or connection broken—refer to circuit and check for continuity and resistance. Small condensers can be checked for "open" by placing a new condenser of similar capacity in parallel.

NOTE. When testing set with batteries connected—it is a good plan to place a standard 10 Watt 110 Volt lamp in series with the BLUE "B" battery wire to protect the tubes in case of a short circuit.

MODEL 404
Schematic, Socket Voltage, Trimmers Alignment

GAMBLE-SKOGMO, INC.

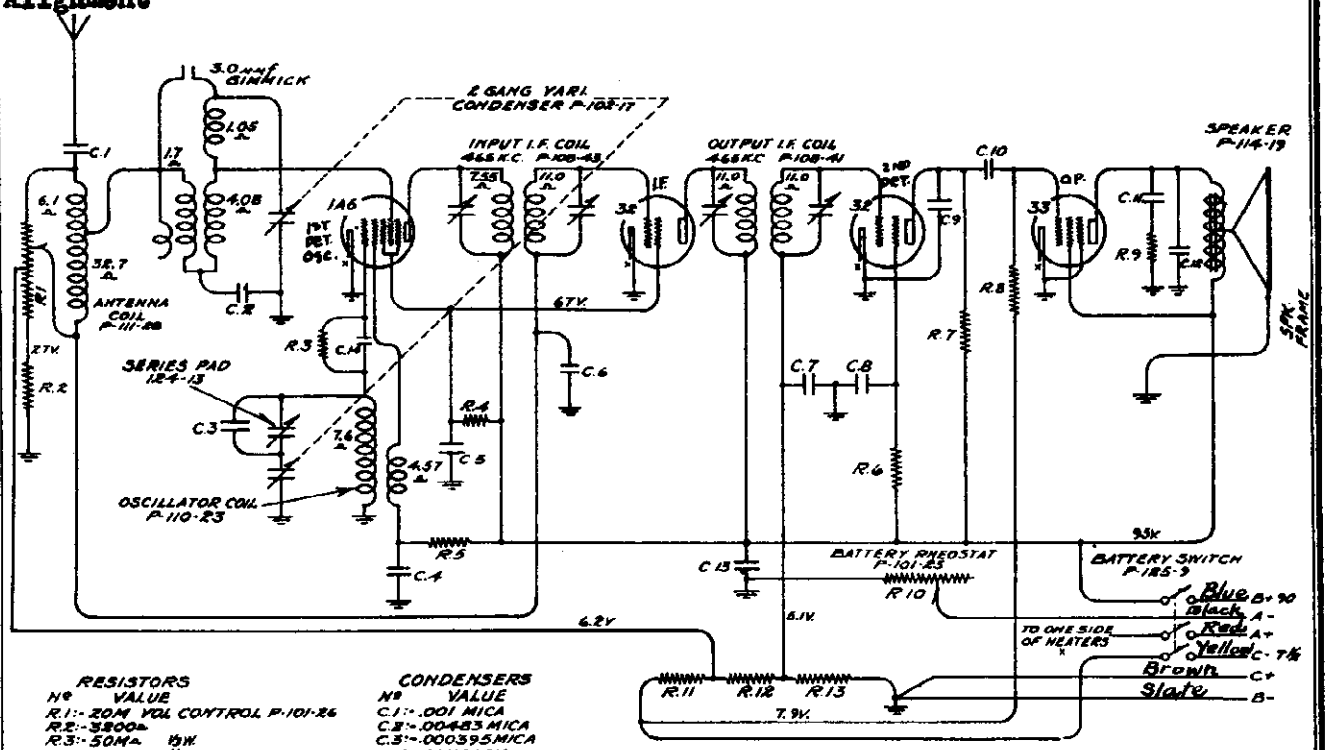

RESISTORS	
Nº	VALUE
R.1	20M VOL CONTROL P-101-26
R.2	3800Ω
R.3	50MΩ ½W.
R.4	11MΩ ½W.
R.5	10MΩ ½W.
R.6	3.3MEGΩ ½W.
R.7	750MΩ ½W.
R.8	500MΩ ½W.
R.9	35MΩ ½W.
R.10	4Ω BAT. RHEOSTAT P-101-25
R.11	1300Ω
R.12	1920Ω
R.13	9800Ω ½W

CONDENSERS	
Nº	VALUE
C.1	.001 MICA
C.2	.00483 MICA
C.3	.000395 MICA
C.4	.01 X 200V.
C.5	.05 X 200V.
C.6	.25 X 200V.
C.7	.05 X 200V.
C.8	.01 X 200V.
C.9	.00025 MICA
C.10	.01 X 400V.
C.11	.01 X 400V.
C.12	.0005 MICA
C.13	.25 X 200V.
C.14	.00025 MICA

- NOTE -
R. 2, R.11, R.12 ARE IN ONE UNIT. P-106-21
C.4, C.5 ARE IN ONE UNIT P-118-11
C.6, C.13 " " " " P-118-5
C.7, C.8 " " " " P-118-11
NUMBERS PREFIXED BY LETTER 'P' ARE PART Nos
ALL VOLTAGES INDICATED ARE WITH NEW BATTERIES, VOLUME CONTROL ON FULL

IF PEAK 465 KC.

Serial No. 5D115200A and up

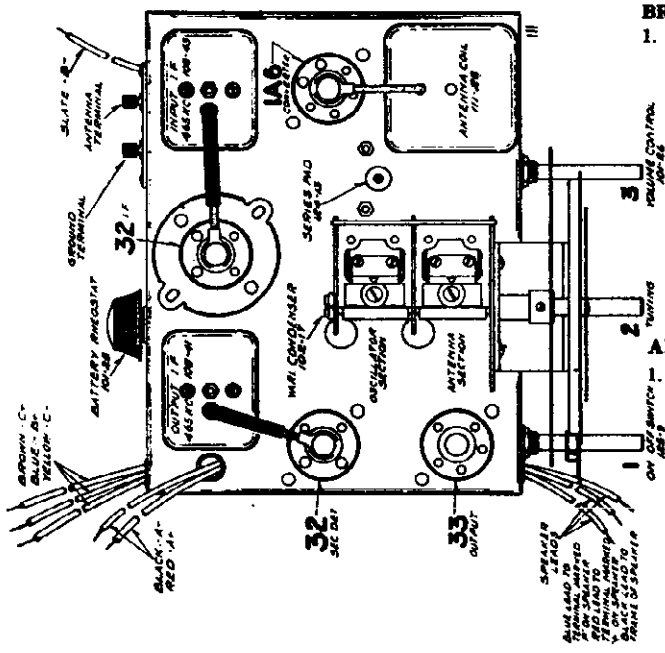

BROADCAST BAND ALIGNMENT:

1. Set external oscillator to 1720 K.C. and connect it in series with a 200 mmfd. condenser to the antenna and ground posts.
   (a) With variable condenser in its minimum capacity position, plates entirely out of mesh, adjust oscillator trimmer (rear section of variable condenser) to resonance.
   (b) Re-set external oscillator to 1400 K.C. Rotate variable condenser, pick up signal and adjust antenna trimmer (front section of variable condenser) to resonance.
   (c) Re-set external oscillator to 600 K.C., move dial pointer to 600 K.C., and adjust series pad, part number 124-13 (see top view), to resonance. While making this adjustment, slowly rock variable condenser to and fro until maximum output is obtained.
   (d) Check for sensitivity at 800, 1000, 1200 K.C. DO NOT BEND PLATES.

ALIGNING I.F. TRANSFORMERS: (465 K.C.)

1. With volume control full on and with variable condenser at its minimum capacity position, plates entirely out of mesh, and with external oscillator set at 465 K.C. connected in series with a .1 mfd. condenser, to the grid of the 1A6 tube (cap at top of tube), adjust I.F. transformers, parts number 108-41 and 108-43, to resonance. Both of these transformers have two (2) adjustments each, they are accessible from the tops of the cans (for location see top view).

Use as a resonance indicator an output meter connected across the outside terminals of the speaker or by means of an adapter to the plate and screen of the type 33 output tube. Maximum deflection of the volt meter indicates resonance.
Use only enough signal to get a readily readable output.
A low range output meter or the low scale of a multi-range meter should be used.

©John F. Rider, Publisher

GAMBLE-SKOGMO, INC.

MODEL 430
Schematic
Alignment, Parts

C-1	.01	200V	R-1	10,000 VOL. CONTROL 17381
C-2 } C-3 }	TUNING COND. 370-OT		R-2	50,000
			R-3	15,000
C-4	.05	200 V	R-4	2,000,000
C-5	.01	200 V	R-5	10,000
C-6	.0002	MICA	R-6	250,000
C-7	.0002	MICA	R-7	1,000,000
C-8	.00005	REGENERATION	R-8	250,000
C-9	.25	200V	R-9	1,000,000
C-10	.01	200V	R-10	400 } CANDOHM PART 17375
C-11	.0005	600V	R-11	100 }
C-12	.01	200V		
C-13	10 MFD.	25 V ELECTROLYTIC.		
C-14	.002	800V		

MODEL 430
BATTERY RADIO

Coronado Model 430

GENERAL: This model is designed for the greatest possible efficiency from the three tubes that the set uses. It is not intended to take the place of the more powerful Coronado models, but is recommended for the customer who is content with reception of stations at a reasonable distance, and wants a compact set at a low price. It is intended for use only on an outside aerial and ground.

TUBE FUNCTIONS: "1A6" first detector-oscillator, "19" one section as second detector regenerative at an IF frequency of 456 K. C., the other section as first audio amplifier, "33" power tube.

CHECKING PARTS: In case of sub-normal performance, check the following in order named: aerial, ground, lightning arrestor, batteries, tubes, speaker, set parts, alignment. The resistance and capacity values of all major parts are shown on the diagram.

ALIGNMENT: Open tuning condenser (high frequency dial setting) connect a signal generator or test oscillator to the grid cap of the 1A6 tube, leaving the present cap in place. Use a small condenser .002-.01 in series with the signal generator lead wire. If the second detector is oscillating—causing the set to "squeal"—turn the "regeneration control" screw (on back of chassis) to the "left" until the oscillation stops. Set the signal generator to 456 K.C. and adjust the two trimmer screws in the top of IF transformer to "peak"-reducing the output of ths signal generator so that only an audible signal is obtained during final adjustments. Now turn the regeneration control to the "right" until oscillation starts, then back it off until the set is stable and recheck the IF adjustments. It is best practice to use an output meter to indicate "peak".

ANTENNA AND OSCILLATOR ALIGNMENT: Connect signal generator to aerial lead wire from set and adjust oscillator trimmer (rear section of tuning condenser) for 1730 K.C. Adjust antenna trimmer at 1000 K.C.

ADDITIONAL NOTE: If all parts have been checked, the set carefully aligned, and performance is still not comparable to another set of the same model, the trouble is probably due to a defective IF transformer and this should be replaced with a new one.

PARTS PRICE LIST ON MODEL 430 CORONADO BATTERY TABLE RECEIVER

PRICES ARE SUBJECT TO CHANGE WITHOUT NOTICE

	List
E-17377—Assb.—Cable & Markers	$ .70
E-17156M—Coil—Antenna	.90
E-17155M—Coil—Oscillator	.60
E-17380—Condenser—Tuning	2.10
E-8873 —Condenser—Mica .0002	.20
E-8874 —Condenser—Tubular .0005 x 600V	.20
E-17002—Condenser—Tubular .002 x 800V	.20
E-8877 —Condenser—Tubular .01 x 200V	.20
E-8661 —Condenser—Tubular .05 x 200V	.20
E-17128—Condenser—Tubular .25 x 200V	.30
E-17080—Condenser—Electrolytic 10 Mfd. x 25V	.40
E-17373—Condenser—Regeneration	.50
E-17381—Control—Volume	1.00
E-17309—Resistor—Carbon 10,000 Ohm	.20
E-17164—Resistor—Carbon 15,000 Ohm	.20
E-8601 —Resistor—Carbon 50,000 Ohm	.20
E-8602 —Resistor—Carbon 250,000 Ohm	.20
E-8765 —Resistor—Carbon 1,000,000 Ohm	.20
E-8887 —Resistor—Carbon 2,000,000 Ohm	.20
E-17375—Resistor—Candohm	.30
E-17160—Scale—Dial	.50
E-17167—Socket—5-Prong #33	.20
E-17386—Socket—6-Prong #1-A-6	.20
E-17314—Socket—6-Prong #19	.20
E-17388—Transformer—Regenerative I. F.	1.50
E-17161—Escutcheon	.30
E-17114—Knob—Wood	.20
E-17397—Speaker—5" Magnetic	3.00

©John F. Rider, Publisher

MODEL 425
MODEL 457, Regal
Schematics

GAMBLE-SKOGMO, INC.

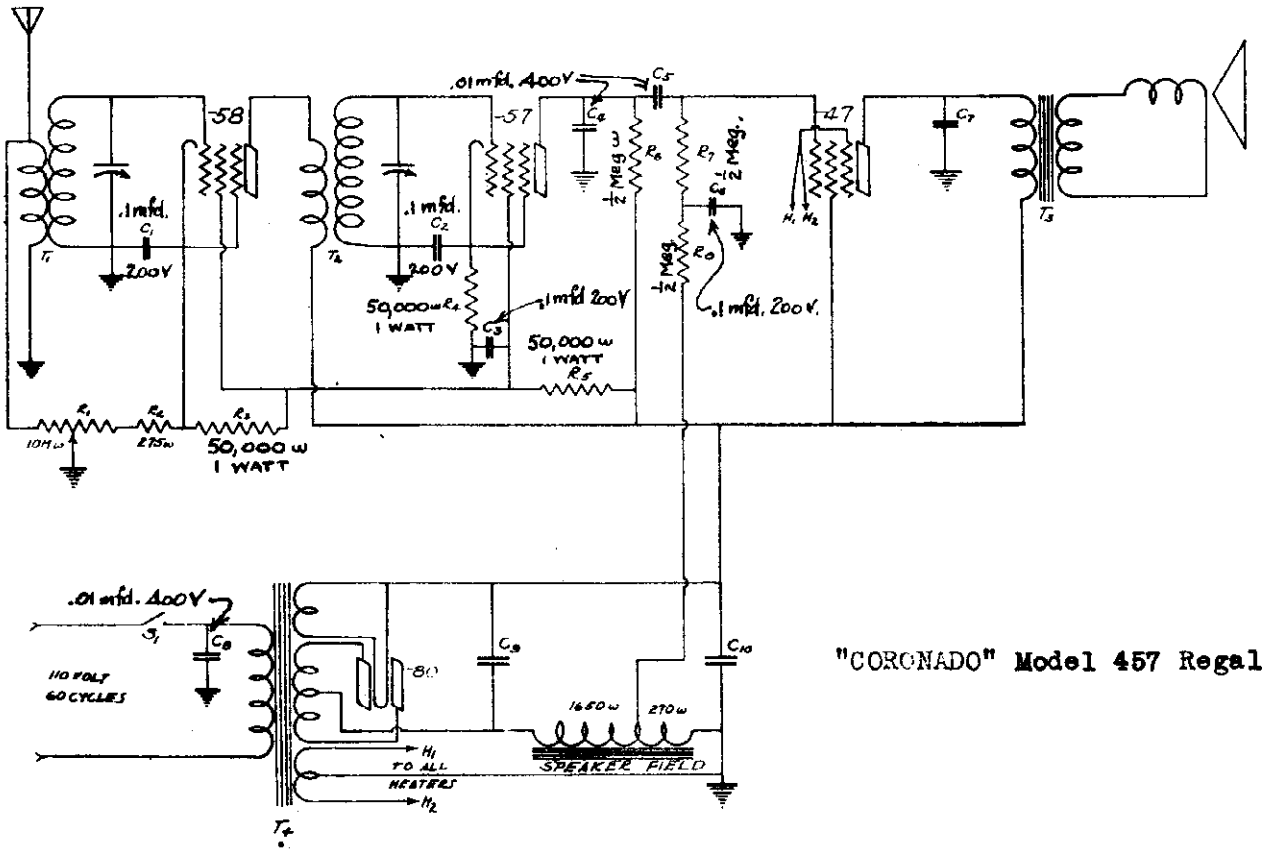

"CORONADO" Model 457 Regal

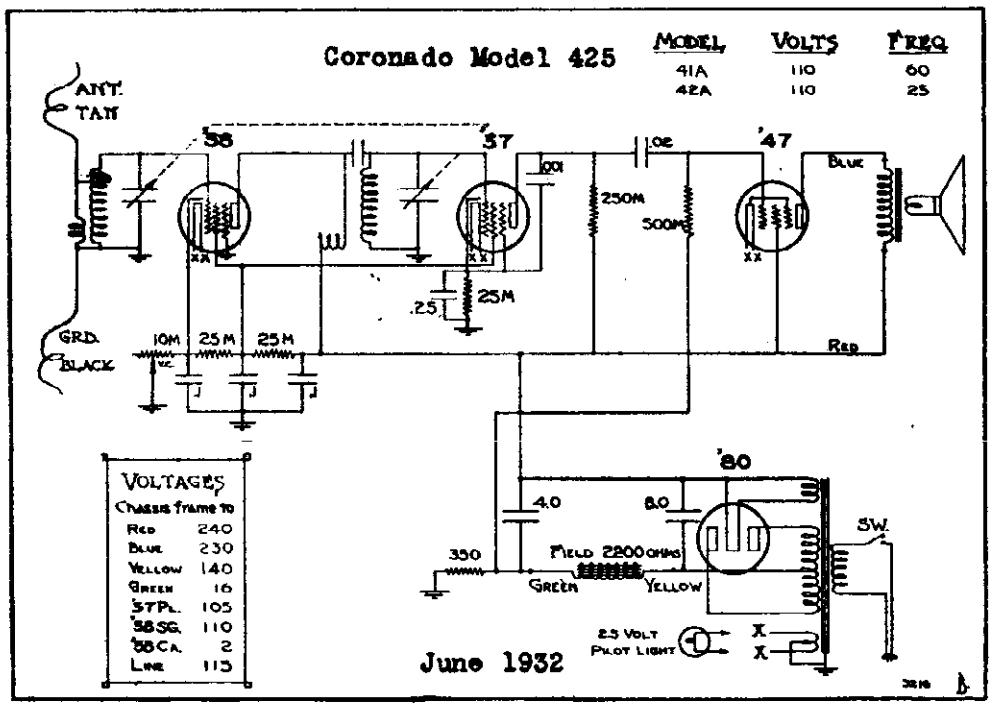

GAMBLE-SKOGMO, INC.

MODEL 516, Symphony
Schematic, Socket

MODEL 501
Schematic
Alignment

Low Battery Signal Fading & Motorboating may be corrected by bypassing "B" bat. from B plus to B minus with a .5 or 1 mf cond. Use a DC continuous 200 V. minimum rating.

"Coronado" Model 501

BATTERY OPERATED
FIVE TUBE SUPERHETERODYNE

IF PEAK 456 KC.

Set oscillator at 456 KC.

To align variable condensers:-
Tune receiver to 1400 KC on dial and set oscillator to this frequency.
Tune set to 600 KC on dial and adjust oscillator to this 600 Kc frequency.

"Coronado" Model 516 Symphony

516-2V BATTERY SET

©John F. Rider, Publisher

MODEL 51-C
Schematic
MODEL 525
Schematic, Socket
Trimmers, Alignment
Parts

GAMBLE-SKOGMO, INC.

PARTS LIST

525

Part No.	Description	List Price
C 145	.1—400 Volt Condenser	$0.25 ea.
C 155	.0065 Mica Condenser	.20 ea.
C 521	Two Gang Condenser	2.50 ea.
C 522	.01—400 Volt Condenser	.25 ea.
C 523	600 Ohm Choke Coil	1.25 ea.
C 524A	Antenna Coil	.80 ea.
C 524B	Oscillator Coil	.70 ea.
C 524C	I. F. Transformer, Input	1.25 ea.
C 524D	I. F. Transformer, Output	1.25 ea.
C 525	5-25-10 Electrolytic Condenser	2.00 ea.
C 525B	5-25-10 Electrolytic Condenser	2.00 ea.
C 525C	5-25 Mfd. Electrolytic Condenser	1.50 ea.
C 525D	5 Mfd. Electrolytic Condenser	.50 ea.
C 526	By-Pass Condenser Block	1.50 ea.
C 527	Special Cord and Plug	1.25 ea.
1030 & C 531	Dual .05 Condenser	.30 ea.
1032 & C 534	Dual .1-.025 Condenser	.50 ea.
1031	Dual .1 x .05 Condenser	.30 ea.
K 214	Knobs	.15 ea.
R 268	2480 Ohm Resistor	.50 ea.
R 270	250 Ohm—Wire Wound Resistor	.25 ea.
V 601	Volume Control	1.35 ea.
W427	Antenna Wire	.30 ea.
	All carbon resistors	.20 ea.
	All sockets	.20 ea.
	Dynamic speakers	5.00 ea.
	Cabinets	2.50 ea.
	Carrying cases	2.00 ea.
	Adapters for 220 volt operation	2.25 ea.

PRICES ARE SUBJECT TO CHANGE WITHOUT NOTICE

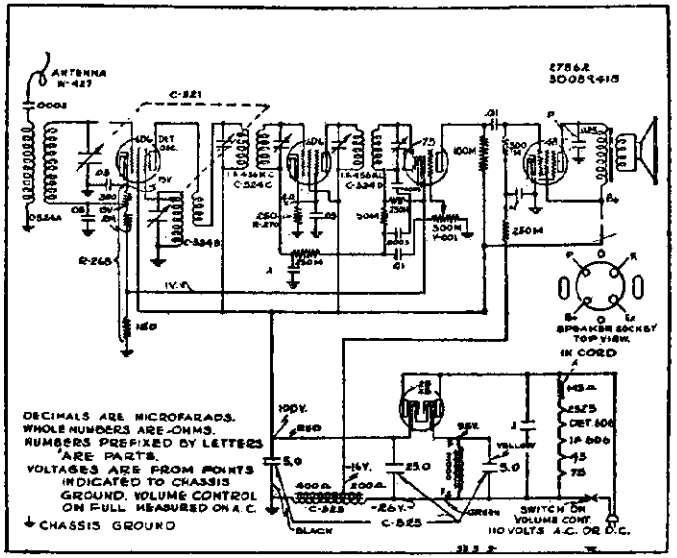

Schematic circuit diagram AC-DC Superheterodyne, with automatic volume control

Should it be necessary, at any time, to rebalance this set the procedure is as follows: Attach a 456 kilocycle oscillator to the grid of the 6A7 tube in back of the variable condenser and adjust the trimming condensers of the I. F. transformers to maximum deflection on an output meter connected across the primary of the speaker input transformer. While adjusting these trimmers, the variable condenser should be at the maximum capacity position—at the extreme right of its rotation.

Next disconnect the antenna wire and connect an oscillator in series with a 75 mmf. condenser to the antenna coil. Rotate the condenser plates to the minimum capacity position—extreme left turn, and adjust the trimmer condenser of the rear section of the variable condenser to resonance with an oscillator set at 1725 kilocycles, then adjust the condenser of the front section of the variable condenser to resonance. Align at 1400—1200—1000—800—600—530 kilocycles, bend slotted plates of variable condenser if necessary.

I.F. frequency 175 KC.

MODEL	VOLTS	FREQ.
51C	110	60 cyc.
52C	110	25
53C	220	60
54C	220	25

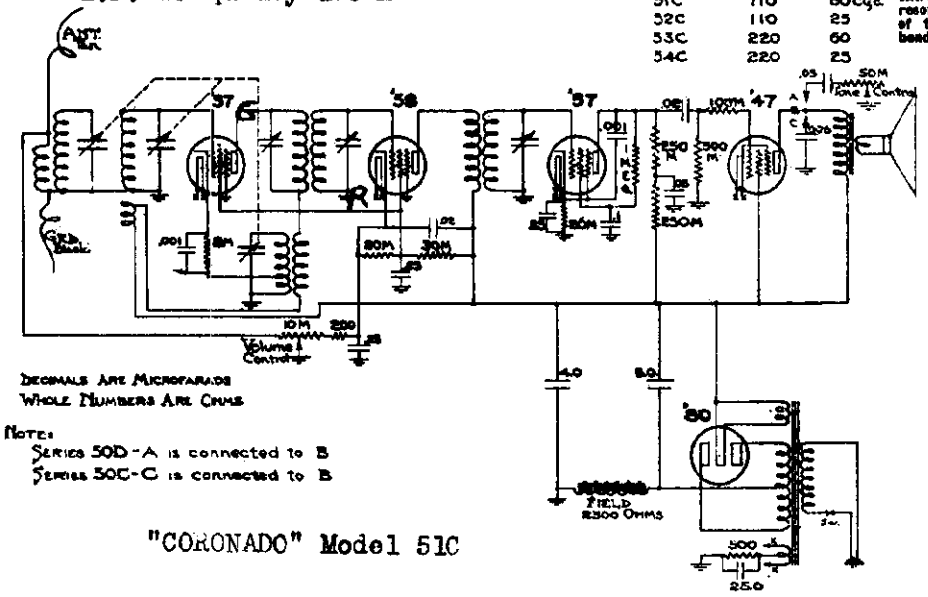

DECIMALS ARE MICROFARADS
WHOLE NUMBERS ARE OHMS

NOTE:
SERIES 50D-A is connected to B
SERIES 50C-C is connected to B

"CORONADO" Model 51C

"CORONADO" Model 525

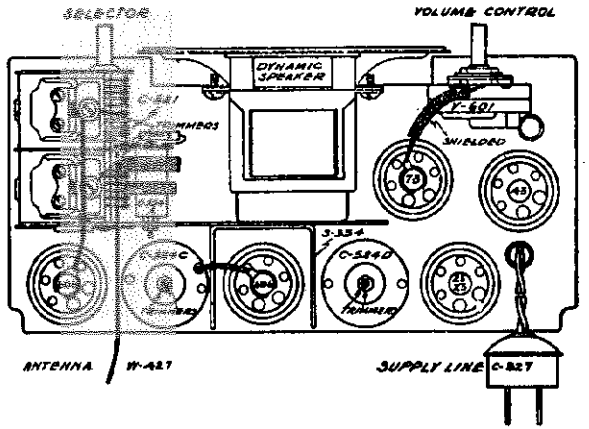

©John F. Rider, Publisher

GAMBLE-SKOGMO, INC.

MODEL Z-521
Schematic

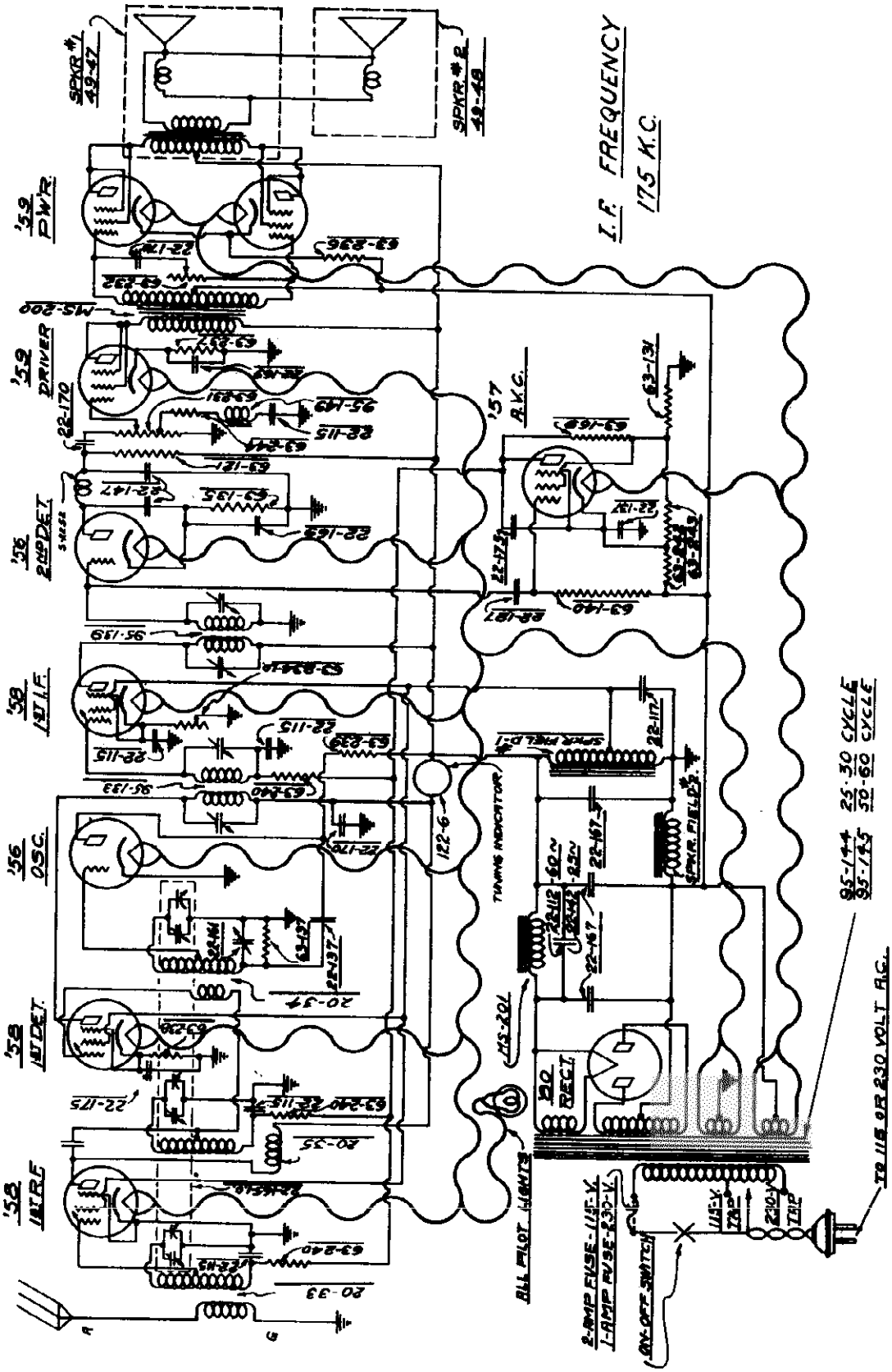

©John F. Rider, Publisher

©John F. Rider, Publisher

VOLTAGE READINGS

Antenna Disconnected — Meter 1000 Ohms Per Volt

Tube Type	Position	Fil. Volt.	Plate Volt.	Cath. Volt.	Screen Volt.	Plate Current
Z-58	R.F.	2.5	220	0	100	5.2
Z-58	1st Det.	2.5	220	+2	100	3.
Z-66	Osc.	2.5	120	0	0	4.
Z-58	I.F.	2.5	220	0	100	6.
Z-56	2nd Det.	2.5	120	20	0	.75
Z-57	A.V.C.	2.5	-40	-75	-2	0
Z-59	Driver	2.5	220	+25	220	8.2
Z-59	Power	2.5	230	-65	230	25.
Z-59	Power	2.5	230	-65	230	25.
Z-80	Rect.	5.0	400*			62.5*

Line voltage 115 (Reading to Ground) Volume control maximum

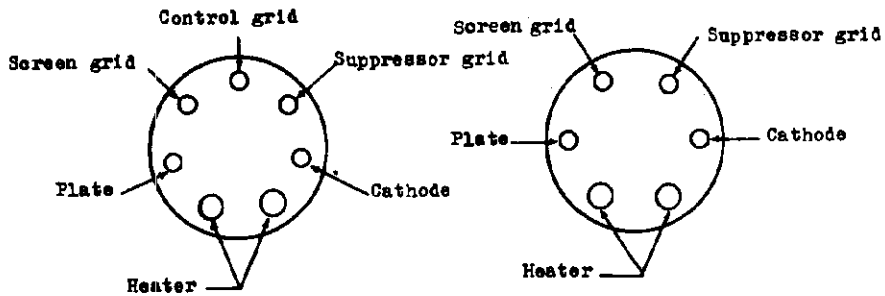

Six and seven prong socket connections (Bottom of socket)

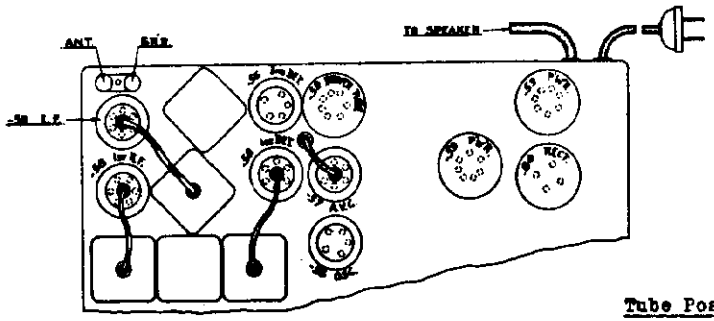

Tube Position

PARTS AND PRICES

Z-521

Dial and Meter Assembly

11-3	Dial Pulley String.....per ft.	$ .25
26-38	Calibrated Dial Strip.....	.15
80-69	Dial Cord Tension Spring.....	.01
80-85	Volume and Tone Control Dial Tension Spring.....	.01
83-274	Volume Control Dial Strip.....	.10
83-275	Tone Control Dial Strip.....	.10
100-18	2.5 Volt Pilot Lamp.....	.12
122-6	Shadowgraph Meter.....	2.00

Condensers

22-112	.1 mfd 300 Volt (Filter).....	.25
22-115	.1 " 200 " (5 used, see footnote).....	.35
22-117	.5 " 300 " (Filter).....	.50
22-137	.05 " 400 " (Oscillator Plate).....	.25
22-142	.4 " 300 " (Filter, 25 Cycle Only).....	.40
22-147	.0005 600 " (2nd Detector Plate).....	.20
22-161	Padder.....	.46
22-165	Three Gang Variable.....	3.50
22-167	8. mfd 500 Volt (Filter).....	1.50
22-169	8. " 50 " (2nd Detector Cathode, Driver Cathode, and 1st Audio Cathode).....	.55
22-170	.1 " 400 " (1st Detector Plate, Audio Coupling and Tone Control).....	.25

Resistors

63-121	100M Ohm 1 Watt (2nd Detector Plate).....	.25
63-135	50M " 1 " (2nd Detector Cathode).....	.25
63-137	250M " ½ " (Oscillator Grid).....	.25
63-140	1 Meg" ½ " (A. V. C. Grid).....	.25
63-169	400 " ½ " (A. V. C. Plate).....	.25
63-231	Volume Control Assembly.....	1.25
63-232	Tone Control Assembly.....	.75
63-234	Sensitivity Control.....	.75
63-236	500 Ohm.....(Power Bias) (Wide Metal).....	.25
63-237	1500 " .....(Driver Bias)(Narrow Metal).....	.25
63-238	1000 " ½ Watt (1st Detector Cathode).....	.25
63-239	24M " 1 " (Oscillator Plate).....	.25
63-240	1900 " ½ " (R.F.,1st Detector & I.F. Grids).....	.25
63-242	2500 " ½ " (A. V. C. Cathode).....	.25
63-243	18M " 1 " (A. V. C. Cathode).....	.25
63-244	500 " ½ " (Acoustic Filter).....	.25

Coils

20-33	Antenna Coil.....	.75
20-34	Oscillator Coil.....	.85
20-35	Detector Coil.....	1.00
S-2252	2nd Detector Plate Choke and Bracket.....	.50
95-133	1st I. F. Transformer (with Grid Lead).....	1.25
95-139	2nd I. F. Transformer (without Grid Lead).....	1.25

*22-116 R. F., 1st Detector, 1. F. Grid Returns, 1. F. Cathode, and Acoustic Filter.

PRICES ARE SUBJECT TO CHANGE WITHOUT NOTICE

GAMBLE-SKOGMO, INC.

MODEL Z-650
Schematic

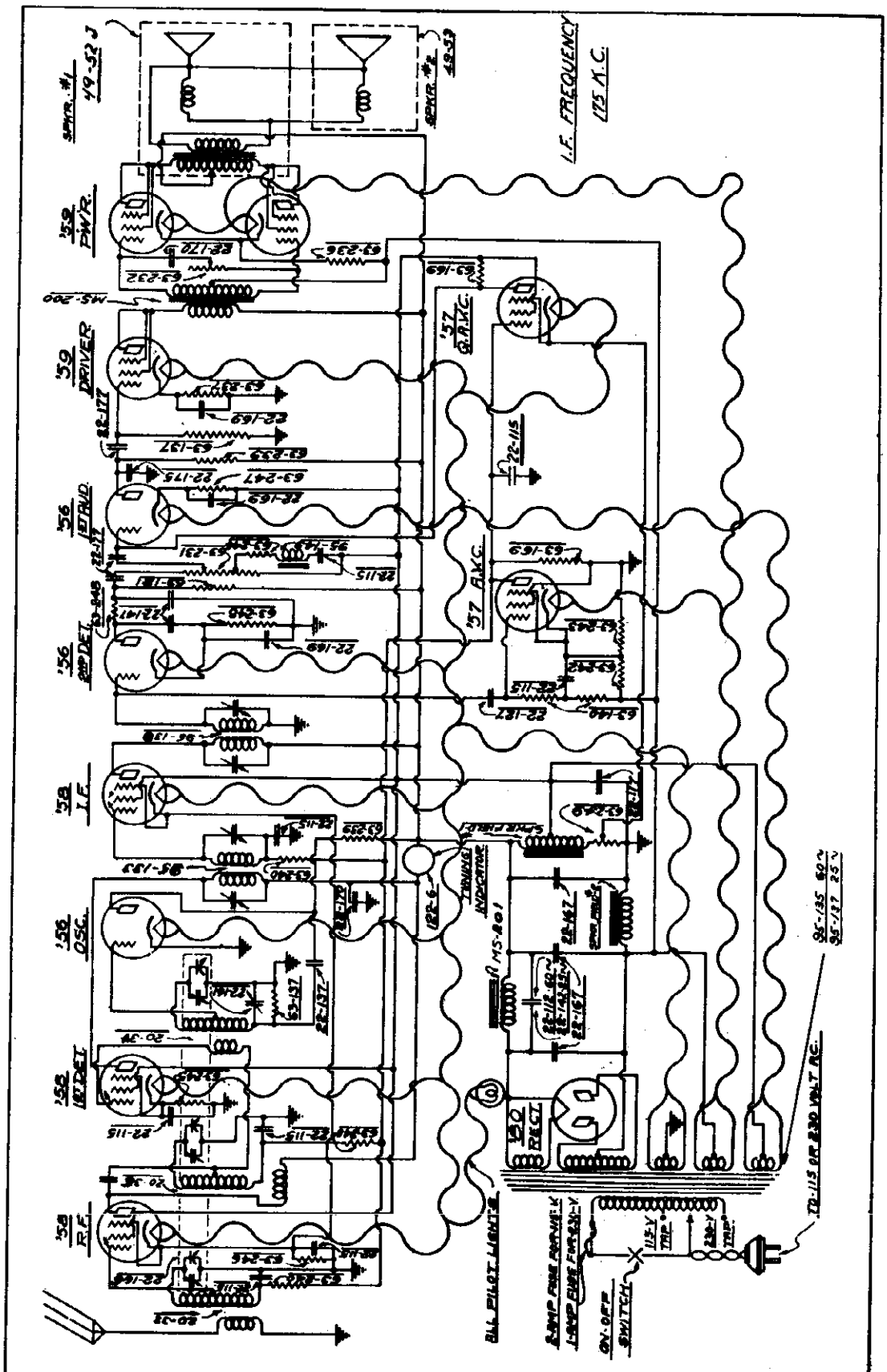

©John F. Rider, Publisher

VOLTAGE READINGS - MODELS 530 531 533

Antenna Disconnected — Meter 1000 Ohms Per Volt

Tube Type	Position	Fil. Volt.	Plate Volt.	Cath. Volt.	Screen Volt.	Supp. Volt.	Plate Current
2-56	1st R.F.	2.5	175	2.2	75	2.2	5.7
2-56	1st Det.	2.5	190	4.5	75	4.5	2.3
2-56	Osc.	2.5	100	0	-	-	3.5
2-56	1st I.F.	2.5	200	2.2	75	2.2	5.5
2-56	2nd Det.	2.5	110	10	-	-	.3
2-56	1st Audio	2.5	170	80	-	-	.8
2-57	A.V.C.	2.5	-	-65	-	-65	-
2-57	Q.A.V.C.	2.5	30	13	75	13	-
2-59	Driver	2.5	190	20	190	190	13
2-59	Power	2.5	195	-70	195	195	22
2-59	Power	2.5	195	-70	195	195	22
2-80	Rect.	5.0	360	-	-	-	65

Line Voltage 115 (Reading to Ground) Volume control maximum

(All readings, with exception of heaters, taken from socket connections to ground. Use 1,000 ohm per volt D. C. meter.)

BALANCE I.F. frequency at 175 K.C. Condenser gang at 1500 K.C. and oscillator padder at 600 K.C.

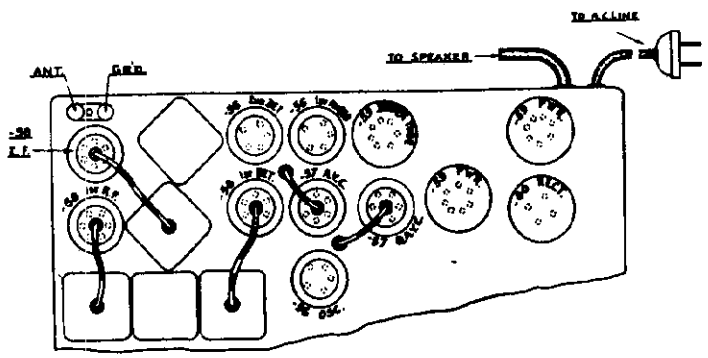

Tube Position

PARTS AND PRICES — MODELS 530 531 533, CHASSIS 2038

	Dial and Meter Assembly	
11-3	Dial Pulley String.....per ft.	$ .10
26-38	Calibrated Dial Strip.....	.15
80-69	Dial Cord Tension Spring.....	.01
80-85	Volume and Tone Control Dial Tension Spring.....	.01
83-274	Volume Control Dial Strip.....	.10
83-275	Tone Control Dial Strip.....	.10
100-18	2½ Volt Pilot Lamp.....	.12
122-5	Shadowgraph Meter.....	2.00
	Condensers	
22-112	.1 mfd 300 volt...(Filter).....	.25
*22-115	.1 " 200 " ...(Night Used, See Below).....	.35
22-117	.5 " 300 " ...(Filter).....	.50
22-127	.000025 600 " ...(A.V.C. Grid).....	.35
22-137	.05 mfd 400 " ...(Oscillator Plate).....	.25
22-142	.4 " 300 " ...(Filter 25 Cycle Only).....	.40
22-147	.0005" 600 " ...(2nd Detector Plate).....	.20
22-161	Padder.....	.45
22-165	Three Gang Variable.....	3.50
22-167	8. mfd 500 volt...(Filter).....	1.50
22-169	8. " 50 " ...(2nd Det. Cathode, Driver Cathode & 1st Audio Cathode).....	.55
22-170	.1 " 400 " ...(1st Det. Plate, Tone Control).....	.25
22-175	.002 " 600 " ...(1st Audio Plate).....	.25
22-177	.2 " 400 " ...(2nd Det. Plate, 1st Audio Grid, 1st Audio Plate).....	.25
	Resistors	
63-121	100M ohm 1 watt...(2nd Detector Plate).....	.25
63-137	250M " ½ " ...(Driver Grid).....	.25
63-140	1 meg" ½ " ...(A.V.C. Grid & Cathode).....	.25
63-169	400 " ½ " ...(A.V.C. & Q.A.V.C. Plate).....	.25
63-231	Volume Control & Switch Assembly.....	1.40
63-232	Tone Control.....	.75
63-236	500 ohm ...(Wide Metal) (Power Tube Bias).....	.25
63-237	1500 " ...(Narrow Metal) (Driver Tube Bias).....	.25
63-239	24M " 1 watt...(Osc. & 1st Audio Plate).....	.25
63-240	1900 " ½ " ...(R.F. 1st Det. & I.F. Grids).....	.25
63-242	2500 " ½ " ...(A.V.C. Cathode).....	.25
63-243	16M " 1 " ...(A.V.C. Cathode).....	.25
63-244	500 " ½ " ...(Acoustic Filter).....	.25
63-245	1500 " ½ " ...(1st Detector Cathode).....	.25
63-246	150 " ½ " ...(R.F. Cathode).....	.25
63-247	8M " ½ " ...(1st Audio Cathode).....	.25
63-248	50M " 1 " ...(2nd Det. Plate & Cathode).....	.25
63-249	Sensitivity & Quiet Control.....	.75

*22-115 R.F. 1st Detector, I.F. Grid Returns, A.V.C. Plate, A.V.C. Cathode, 1st Detector Cathode, R.F. Cathode, and Acoustic Filter.

PRICES ARE SUBJECT TO CHANGE WITHOUT NOTICE

GAMBLE-SKOGMO, INC.

MODEL 578(Two Types)
Serial 5G133670A to
5K173250A and
Above Serial 5K173250A
Schematic,Voltage,Parts

MODEL 578—5G133670A—5K173250A

TUNING RANGE—
Standard Broadcast Band
530 - 1720 Kilocycles

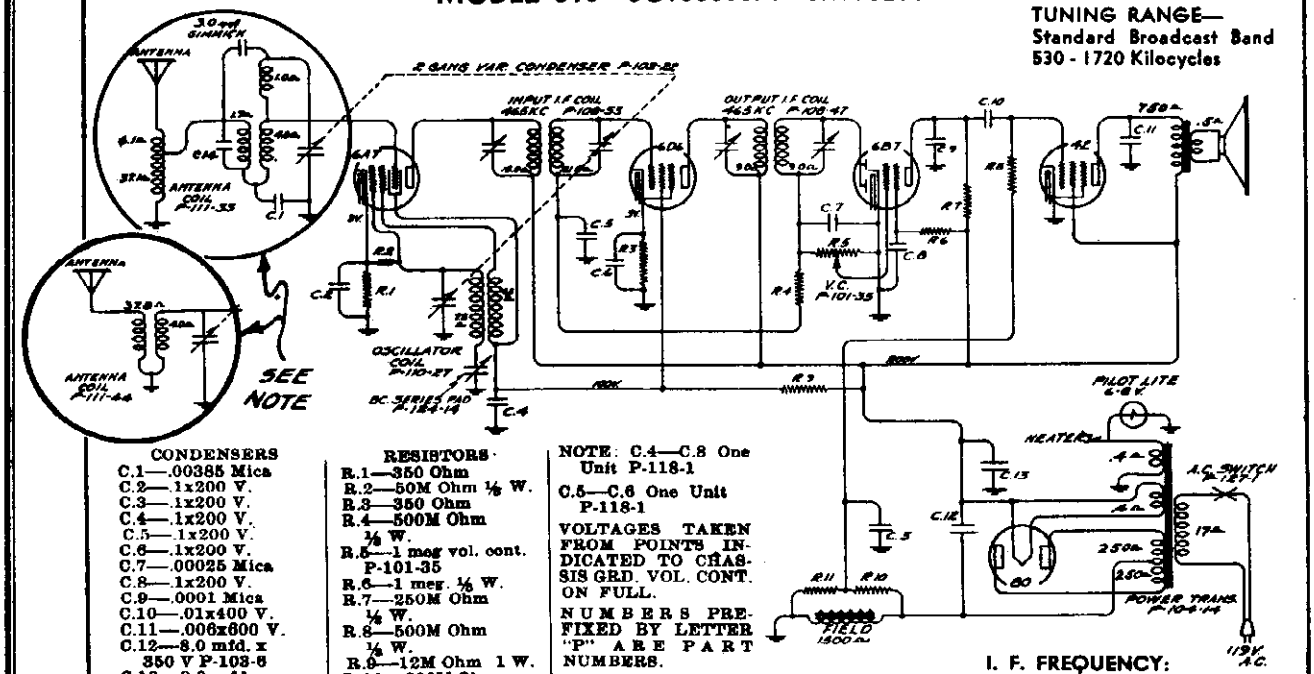

CONDENSERS
C.1—.00385 Mica
C.2—.1x200 V.
C.3—.1x200 V.
C.4—.1x200 V.
C.5—.1x200 V.
C.6—.1x200 V.
C.7—.00025 Mica
C.8—.1x200 V.
C.9—.0001 Mica
C.10—.01x400 V.
C.11—.006x600 V.
C.12—8.0 mfd. x 350 V P-103-6
C.13—8.0 mfd. x 300 V P-103-7
C.14—110 mfd. Either external Mica Cond. or cap. winding in coil.

RESISTORS
R.1—350 Ohm
R.2—50M Ohm ⅛ W.
R.3—350 Ohm
R.4—500M Ohm ⅛ W.
R.5—1 meg vol. cont. P-101-35
R.6—1 meg. ⅛ W.
R.7—250M Ohm ⅛ W.
R.8—500M Ohm ⅛ W.
R.9—12M Ohm 1 W.
R.10—800M Ohm ½ W.
R.11—201M Ohm ⅛ W.

NOTE: C.4—C.8 One Unit P-118-1
C.5—C.6 One Unit P-118-1
VOLTAGES TAKEN FROM POINTS INDICATED TO CHASSIS GRD. VOL. CONT. ON FULL.
NUMBERS PREFIXED BY LETTER "P" ARE PART NUMBERS.

I. F. FREQUENCY:
465 K.C.

NOTE:-

Beginning with 5K173250A, Antenna Coil No. 111-44 replaced No. 111-33, and capacities C1—.00385 mfd. and C14—.00011 mfd. were eliminated. Note: On early models C14 was a capacity winding on the primary of the No. 111-33 Antenna Coil.

See revised diagram

REPAIR PARTS LIST
MODEL 578 - SERIES A
Serial No. 5G133670A and up

PART NO.	DESCRIPTION
	CONDENSERS
100-11	.01 x 400 Volt Tubular Condenser
100-19	.006 x 600 Volt Tubular Condenser
100-20	.1 x 200 Volt Tubular Condenser
103-6	8 Mfd. x 350 Volt Electrolytic Condenser
103-7	8 Mfd. x 300 Volt Electrolytic Condenser
118-1	Dual .1 x 200 Volt Tubular
129-5	.0001 Mica - Type MT - 20%
129-12	.00025 Mica - Type MT - 20%
129-43	.00385 Mica - Type MW - 5%
	RESISTORS
130-3	500M Ohm - ⅛ Watt - 20% - 100 Volt Carbon
130-8	201M Ohm - ⅛ Watt - 10% - 20 Volt Carbon
130-11	250M Ohm - ⅛ Watt - 20% - 50 Volt Carbon
130-12	50M Ohm - ⅛ Watt - 20% - 20 Volt Carbon
130-19	1 Meg Ohm - ⅛ Watt - 20% - 100 Volt Carbon
130-46	800M Ohm - ½ Watt - 10% - 100 Volt Carbon
130-49	12M Ohm - 1 Watt - 20% - 100 Volt Carbon
130-74	350 Ohm - ⅛ Watt - 20% - 10 Volt Wire Wound
	COILS
108-47	Output I.F. Transformer Complete
108-53	Input I.F. Transformer Complete
110-27	Oscillator Coil Complete
111-33	Antenna Coil Complete
111-44	Antenna Coil SK173250A-up
	TRANSFORMERS
104-14	50/60 Cycle Power Transformer
104-17	Universal Power Transformer 40 Cy. Primary
104-18	25 Cycle Power Transformer
	SOCKETS
121-6	Six Prong Socket - Type 42
121-6	Six Prong Socket - Type 6D6
121-7	Seven Prong Socket - Type 6B7
121-7	Seven Prong Socket - Type 6A7
121-8	Five Prong Socket - Type Speaker
121-9	Four Prong Socket - Type 80
	SPEAKER
114-15	Six Inch Dynamic Speaker
114-16	Five Inch Dynamic Speaker
	MISCELLANEOUS
101-35	Volume Control Less Switch
102-22	Two Gang Variable Condenser
107-5	Line Cord & Plug
112-15	Dial Crystal Only
112-16	Dial Pointer
112-19	Drive Disc Assembly Complete
112-40	Pilot Light Bracket
112-60	Drive Bracket Assembly Complete
112-66	Bakelite Escutcheon Complete with Glass
112-113	Dial Scale
115-22	Tube Shield
116-5	6-8 Volt, T-50 Pilot Light Bulb
124-14	Type J-6-8 Series Pad
127-1	Line Switch
131-2	Bakelite Knob
135-14	Dial Pointer Screw

©John F. Rider, Publisher

MODEL 578, Series A
Socket, Trimmers
Alignment

GAMBLE-SKOGMO, INC.

Model 578—Series A

5-TUBE A. C. SUPERHETERODYNE RECEIVER

DESCRIPTION

Tubes

The Tube complement of this chassis is as follows:

1 Type 6A7—pentagrid electron coupled oscillator and first detector.
1 Type 6D6—remote cut-off pentode as I.F. amplifier.
1 Type 6B7—duplex diode pentode as diode detector, A.V.C. and A.F.
1 Type 42—pentode output tube.
1 Type 80—high vacuum rectifier.

Voltages taken from different points of circuit to chassis are measured with volume control full on, all tubes in their sockets and speaker connected, with a volt meter having a resistance of 1000 ohms per volt. These voltages are clearly indicated on the circuit diagram

All voltages are measured with 119 volts on the primary of the power transformer.

Resistance of coils and transformer windings are indicated in ohms on schematic circuit diagram.

Transformers are available and chassis are sometimes equipped with universal transformers for operation on 40 and 60 cycles and with primary taps for 108, 125, 150, 220 and 250 volts (see illustrations) and also sometimes equipped with 25 cycle transformers with 105-115 volt or 220 volt primaries, not universals.

ALIGNING INSTRUCTIONS

Description of various dummy antennas used and referred to in these instructions:

(1) I.F. Dummy—Consists of a .1 mfd. condenser connected in series with the external oscillator.

(2) Broadcast Dummy—Consists of a 200 mmfd. condenser and a 20 ohm resistor connected in series with each other and in series with the external oscillator.

Resonance Indicator:

Use as a resonance indicator an output meter connected across the primary of the speaker input transformer, or by means of an adapter between the plate and screen terminals of the type 42 output tube. Maximum deflection of the meter indicates resonance. Use only enough signal to get a readily readable output. A low range output meter or the low scale of a multi-range volt meter should be used.

Alignment

No aligning adjustments should be attempted without first thoroughly checking over all other possible causes of trouble, such as poor installations, open or grounded antenna systems, low line voltages, defective tubes, condensers and resistors. In order to properly align this chassis, an oscillator (generator) is absolutely necessary. No aligning adjustments should be attempted with the chassis in the cabinet. To remove the knobs, pull them off and to take the chassis out of the cabinet, remove the three bolts by which it is fastened and the speaker plug which you will find on the front flange of the chassis panel.

Aligning I. F. Transformers

1. With volume control full on, the extreme right of its rotation, and with variable condenser at its minimum capacity position, plates entirely out of mesh, adjust the I.F. transformers (two adjustments at the top of parts number 108-53 and 108-47)

   (a) Connect external oscillator which has been adjusted to 465 kilocycles in series with I.F. dummy antenna, to the control grid cap of the type 6D6 tube and chassis ground. Adjust output I.F. transformer, part number 108-47, to resonance.

   (b) Move generator output clip from grid of 6D6 to grid cap of 6A7 tube and align input I.F. transformer, part number 108-53.

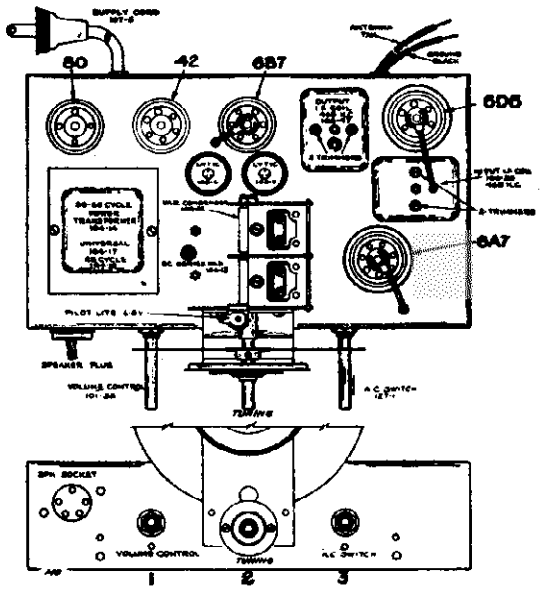

   (c) With generator connected to grid of type 6A7 tube, readjust output I.F. transformer, part number 108-47, to resonance.

R. F. Alignment—

(530 - 1720 Kilocycles)

1. With gang condenser in its minimum capacity position, plates entirely out of mesh, connect an external oscillator in series with broadcast dummy antenna to tan antenna and black ground leads and make the following adjustments:

   (a) With external oscillator set at 1720 kilocycles, adjust oscillator trimmer, (rear of gang condenser).

   (b) Re-set external oscillator to 1400 kilocycles, rotate condenser, pick up oscillator signal and adjust antenna trimmer to resonance, (front section of gang condenser).

   (c) Re-set external oscillator to 600 kilocycles and adjust series pad to resonance, rotate condenser and move dial pointer to 600 kilocycles by gently rocking condenser to and fro. Pick up oscillator signal while adjusting series pad to resonance, maximum deflection on an output meter. This adjustment is accessible from the top of the chassis and is located between variable condenser and power transformer.

25 Cycle Chassis differ only from 60 cycle chassis in that part number 104-18 transformer is used in place of 50/60 cycle transformer, part number 104-14.

Service Notes

To check for open by-pass condensers, shunt each condenser with another of similar capacity and of the same voltage rating, which is known to be good, until the defective unit is located. Open by-pass condensers frequently cause oscillation and distorted tone. Defective and shorted electrolytic filter condensers cause excessive hum, motor-boating, low volume and a reduction in all D.C. voltages. Open or shorted electrolytic and by-pass condensers (across bias resistor of type 42 tube) will cause low volume and distorted tone.

©John F. Rider, Publisher

MODEL 2-ODM-578
Schematic, Parts
Resistance Data

GAMBLE-SKOGMO, INC.

Replacement Parts

NOTICE—A change has been made in our parts numbering system. Old parts which are used in new receivers will have a new number assigned to them. For your convenience we are listing below the new part number and the corresponding old part number, should there be one. **Order by new part number only.**

There is a large letter on the chassis which identifies the set as to major part changes. When ordering parts please be sure to mention the series number and this large letter.

New Part No.	Old Part No.	Description	List Price
P-3A126	2022	Type 76 Glass Tube Socket	$0.10
P-3A113	1855	Type 6J6 Glass Tube Socket	.10
P-3A211		Type 6K7 Metal Tube Socket	.15
P-3A63	1643	Type 45 Glass Tube Socket	.10
P-3A120	2025	Type 80 Glass Tube Socket	.10
P-32X30	40424	Tube Shield Base to Fit All Shields Below	.10
P-32X32	40434	Bottle-neck Type Shield (Used on 6J6 Tubes)	.15
P-32X50		Closed Top Type Shield (Used on 2nd Det. Tube)	.10
P-3A36	1637	Speaker Socket	.10
P-12A200		10" Dynamic Speaker Complete with Output Transformer	6.70
Specify Name of Knob & Model of Receiver		Small Push-on Type Knob	.15
		Large Set Screw Type Knob	.20
		Special Selectivity Control Knob (Set Screw Type)	.45
P-2X30	10087	Felt Washers for use with above knobs	.10
P-17X1	10330	Glass Crystal	.15
P-20X25	20075	Crystal Retainer Ring	.10
P-8X21	10272	Rubber Chassis Mounting Cushions	.30
P-2A44		Band Change Switch	2.05
P-2A45		Selectivity Control Switch	.45

TRANSFORMERS AND COILS

New Part No.	Old Part No.	Description	List Price
P-9A405	T1	Antenna R. F. Transformer & Can Assembly	$2.40
P-9A425	T2	Interstage R. F. Transformer & Can Assembly	2.30
P-9A426	T9	Oscillator Coil & Can Assembly	2.30
P-9A397	T3	1st I. F. Transformer & Can Assembly	2.15
P-9A398	T4	2nd I. F. Transformer & Can Assembly	1.85
P-9A399	T5	3rd I. F. Transformer & Can Assembly	2.20
P-30X16	9864 T7	Audio Input Transformer	2.40
P-31X32	T6	Audio Output Transformer (Part of Speaker—May be Secured Separately)	2.40
P-53X94	T8	Power Transformer—115 Volt; 60 Cycle	4.70
P-53X95	T8	Power Transformer—115 Volt; 25 Cycle	8.20
P-53X96		Power Transformer—115-230 Volt; 40-60 Cycle	6.70
P-9A391	L3	High Frequency Oscillator Tracking Coil	.35
P-9A400	L1	2nd I. F. Plate Isolating Reactor	.60

DIAL AND DRIVE ASSEMBLY

New Part No.	Old Part No.	Description	List Price
P-5A27		Gang Condenser Bracket and Bearing	.45
P-26X220		Drive Shaft	.15
P-24X207		Drive Pulley with set screw	.30
P-20X70		Main Shaft Pointer Stud	.10
P-24X205		Gear (Rotary)	.30
P-24X210		Gear (Stationary)	.30
P-20X35		Gear Surrender Spring	.10
P-26X205		Main Pointer Shaft Assembly	.45
P-26X209		Micrometer Pointer Shaft Assembly	.45
P-24X209		Compound Gear Assembly	.20
P-27X33		Tension Pulley Arm Assembly	.35
P-20X42		Tension Pulley Spring	.10
P-8X35		Drive Belt	.20
P-30X36		Dial Clamp to secure Dial Strip to frame (with 6-32x3/16" mounting screw)	.10
		Dial Strip Only (Specify Series No. and Name of Receiver)	.50
P-15X22		Double End Pointer	.10
P-15X23		Micrometer Pointer	.10
P-7A26	2012	Pilot Lamp Bulb (6-8V)	.15
P-7A27	2126	Pilot Lamp Sockets & Spring Clips	.10

DIAL AND DRIVE ASSEMBLY—Continued

New Part No.	Old Part No.	Description	List Price
P-15A38		Dial Bracket Assembly Complete	1.90
P-20X34		Pointer Slide, Take-up Spring Only	.10
P-10X9		4" Black Drive Cord Only .... Dozen	.10
P-29X42		Brass Collars and Set Screws Only for Securing above Drive Cord to Shaft	.10

NOTE: The Gang Condenser and Drive Assembly, less Dial Assembly, can be purchased complete—see Condenser List.

RESISTORS

New Part No.	Code	Value	Watts	Type	List Price
P-D93163	R1	16,000 ohms	2.0	Carbon	$0.45
P-A94151	R2	150 ohms	0.2	Carbon	.15
P-36X206	R3 / R10	2,500 ohms / 2.0 Megohms		Dual Volume Control	1.75
P-A94401	R4	400 ohms	0.2	Carbon	.15
P-C94300	R5	30,000 ohms	1.0	Carbon	.15
P-A94304	R6	300,000 ohms	0.2	Carbon	.15
P-A95104	R7	100,000 ohms	0.2	Carbon	.10
P-A95205	R8	2.0 Megohms	0.2	Carbon	.10
P-A94105	R9	1.0 Megohm	0.2	Carbon	.15
P-40X305	R11	3.0 Megohms		Tone Control	.75
P-A95104	R12	100,000 ohms	0.2	Carbon	.10
P-B94102	R13	1,000 ohms	0.5	Carbon	.15
P-E94253	R14	25,000 ohms	3.0	Carbon	.30
P-C94253	R15	25,000 ohms	1.0	Carbon	.15
P-A95252	R16	2,500 ohms	0.2	Carbon	.10
P-A94803	R17	80,000 ohms	0.2	Carbon	.15
P-A95104	R18	100,000 ohms	0.2	Carbon	.10

CONDENSERS

New Part No.	Code	Value	Volts	Description	List Price
P-47X59	C1	200 mmf.		Moulded	$0.15
P-17A36	C2	2-25 mmf.		Range B Antenna Trimmer	.30
P-17A36	C3	2-25 mmf.		Range C Antenna Trimmer	.30
P-17A36	C4	2-25 mmf.		Range D Antenna Trimmer	.30
P-46X80	C5	0.05 mf.	180	Tubular	.15
P-46X104	C6	0.25 mf.	240	Tubular	.25
P-17A36	C7	2-25 mmf.		Range B Interstage Trimmer	.30
P-17A36	C8	2-25 mmf.		Range C Interstage Trimmer	.30
P-17A36	C9	2-25 mmf.		Range D Interstage Trimmer	.30
P-46X117	C10	0.25 mf.	180	Tubular	.25
P-46X121	C11	0.25 mf.	360	Tubular	.30
P-17A30	C12 / C13	130-280 mmf. / 130-280 mmf.		1st I. F. Trimmer Condensers	.45
P-17A30	C14 / C15	150-250 mmf. / 150-250 mmf.		2nd I. F. Trimmer Condensers	.45
P-46X80	C16	0.05 mf.	180	Tubular	.15
P-44X10	C17	4.0 mf.	130	Wet Electrolytic	.85
P-46X105	C18	0.10 mf.	300	Tubular	.20
P-17A40	C19	70-130 mmf.		3rd I. F. Primary Trimmer	.30
P-47X36	C20	50 mmf.		Moulded	.10
P-46X120	C21	0.01 mf.	360	Tubular	.15
P-46X123	C22	0.30 mf.	180	Tubular	.30
P-46X114	C23	0.004 mf.	400	Tubular	.15
P-44X11	C24	18.0 mf.	290	Wet Electrolytic	1.20
P-44X10	C25	14.0 mf.	400	Wet Electrolytic	1.25
P-46X119	C26	0.05 mf.	360	Tubular	.20
P-46X80	C27	0.05 mf.	180	Tubular	.15
P-47X33	C28	35 mmf.		Moulded	.10
P-17A41	C29	2-25 mmf.		Oscillator Range D Trimmer	.30
P-17A36	C30	2-25 mmf.		Oscillator Range C Trimmer	.30
P-47X60	C31	1400 mmf.		Moulded	.30
P-17A41	C32	2-25 mmf.		Oscillator Range B Trimmer	.30
P-17A35	C33 / C34	300-600 mmf. / 40-100 mmf.		600 KC Padding Condenser / 6000 KC Padding Condenser	.45
P-47X61	C35	10 mmf.		Moulded	.15
P-25A30				3 Section Gang Condenser Complete with Drive Assembly—Less Dial Assembly	5.40

PHONO ATTACHMENT PARTS

New Part No.	Old Part No.	Description	List Price
P-2A31	3172	Phono Switch (Double Pole Double Throw Switch)	$0.40
P-3A12	1193	Phono Jack	.10
P-30A36	2122	Switch Knob	.20
P-4A17	1421	Terminal Strip	.10
		7 inches of No. 5661 Shielded Sleeving (5/16 Dia.)	.15

PRICES ARE SUBJECT TO CHANGE WITHOUT NOTICE

D. C. Resistance of Windings
Refer to Fig. 4.

Following are the D. C. resistances of the various windings in the chassis. The values given below will vary slightly in different sets.

Part No.	Winding	Code	D. C. Resistance in Ohms
P-9A405	Antenna R. F. Transformer	T1	
	Range B Primary Winding		21.8
	Range C Primary Winding		0.3
	Range D Primary Winding		0.2
	Range B Secondary Winding		6.3
	Range C Secondary Winding		1.8
	Range D Secondary Winding		Small
P-9A425	Interstage R. F. Transformer	T2	
	Range B Primary Winding		2.3
	Range C Primary Winding		1.4
	Range D Primary Winding		0.4
	Range B Secondary Winding		6.0
	Range C Secondary Winding		2.0
	Range D Secondary Winding		Small
P-9A426	Oscillator Coils	T9	
	Range B Grid Coil		
	Red White Tap to White		3.0
	Red White Tap to Ground		1.0
	Range C Grid Coil		
	Green White Tap to Green		1.2
	Green White Tap to Ground		0.5
	Range D Grid Coil		
	Black White Tap to Black		Small
	Black White Tap to Ground		Small
	Oscillator Plate Coil		0.2
P-9A397	1st I. F. Transformer	T3	
	Primary Winding		4.6
	Secondary Winding		
	Long Portion		3.4
	Short Portion		1.7
	Coupling Winding		0.1
P-9A398	2nd I. F. Transformer	T4	
	Primary Winding		9.4
	Secondary Winding		9.0
	Coupling Winding		0.5
P-9A399	3rd I. F. Transformer	T5	
	Primary Winding		10.2
	Secondary Winding		38.4
P-30X16	Audio Input Transformer	T7	
	Primary Winding		2030.
	Secondary Winding		
	Center Tap to Inside		3000.
	Center Tap to Outside		2890.
P-51X32	Audio Output Transformer	T6	
	Primary Winding		
	Center Tap to Inside		190.
	Center Tap to Outside		201.
	Secondary Winding		0.4
P-12A200	Dynamic Speaker (10")		
	Speaker Voice Coil		1.6
	Speaker Field	L2	570.
P-53X94	115 Volt 60 Cycle Power Trans.	T8	
	Primary Winding		4.8
	Tube Filament Secondary (A-A)		0.2
	Tube Filament Secondary (B-B) (45)		0.1
	Rectifier Filament Secondary		0.1
	High Voltage Secondary Winding		
	Center Tap to Inside		110.
	Center Tap to Outside		120.
P-9A400	2nd I. F. Plate Isolating Reactor	L1	26.
P-9A391	High Frequency Oscillator Tracking Coil	L3	1.2

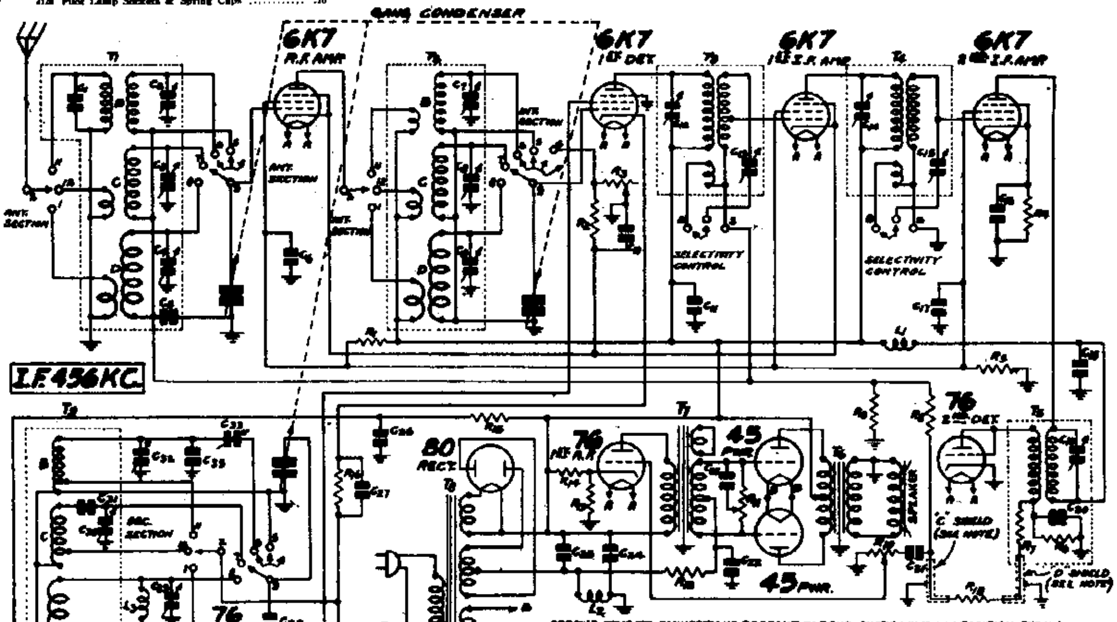

ARROWS INDICATE CONNECTIONS PRESENT IN BAND SWITCH WHEN IN POSITION SHOWN.

	POSITION 1 STANDARD WAVE (B)	POSITION 2 SHORT WAVE (C)	POSITION 3 SHORT WAVE (D)
OSC. & ANT SECTION	5 6 7 8 9 11 12 1 2	5 6 7 8 9 11 12 1 2	5 6 7 8 9 11 12 1 2
DET SECTION	4 5 6 7 8 9 11 12 1 2	4 5 6 7 8 9 11 12 1 2	4 5 6 7 8 9 11 12 1 2

CONTACT LOCATIONS 3, 4 AND 10 IN OSC. AND ANT SECTIONS, AND 3 AND 10 IN DET SECTION ARE BLANK.

GROUPS OF CIRCUIT ELEMENTS ENCLOSED IN DOTTED RECTANGLES COMPRISE DISTINCT MECHANICAL ASSEMBLIES.
"B" AND "S" ON SELECTIVITY CONTROL DENOTE "BROAD" AND "SHARP" RESPECTIVELY.
THE CAPACITY OF THE "C" SHIELD IS 35 mmf. THE CAPACITY OF THE "D" SHIELD IS 80 mmf.

C 1 200 mmf.
C 2 2-25 mmf.
C 3 2-25 mmf.
C 4 2-25 mmf.
C 5 .05 mf. 180 V.
C 6 .25 mf. 240 V.
C 7 2-25 mmf.
C 8 2-25 mmf.
C 9 2-25 mmf.
C10 .25 mf. 180 V.

C11 .25 mf. 360 V.
C12 130-280 mmf. } ONE UNIT
C13 130-280 mmf.
C14 150-250 mmf. } ONE UNIT
C15 150-250 mmf.
C16 .05 mf. 180 V.
C17 4.0 mf. 130 V.
C18 .10 mf. 300 V.
C19 70-130 mmf.
C20 50 mmf.

C21 .01 mf. 360 V.
C22 .30 mf. 180 V.
C23 .004 mf. 400 V.
C24 18.0 mf. 290 V.
C25 14.0 mf. 400 V.
C26 .05 mf. 360 V.
C27 .05 mf. 180 V.
C28 35 mmf.
C29 2-25 mmf.
C30 2-25 mmf.

C31 1400 mmf.
C32 2-25 mmf.
C33 300-600 mmf. } ONE UNIT
C34 40-100 mmf.

R 1 16,000 ohm 2.0 W.
R 2 150 ohm .2 W.
R 3 2,500 ohm } Dual Volume Control
R10 2.0 megohm
R 4 400 ohm .2 W.

R 5 30,000 ohm 1.0 W.
R 6 300,000 ohm .2 W.
R 7 100,000 ohm .2 W.
R 8 2.0 megohm .2 W.
R 9 1.0 megohm .2 W.
R11 3.0 megohm Tone Cont.
R12 100,000 ohm .2 W.
R13 1,000 ohm .5 W.
R14 25,000 ohm 3.0 W.
R15 25,000 ohm 1.0 W.
R16 2,500 ohm .2 W.
R17 80,000 ohm .2 W.

T 1 Ant. R.F. Trans.
T 2 Interstage R.F. Trans.
T 3 1st I.F. Trans.
T 4 2nd I. F. Trans.
T 5 Diode Input Trans.
T 6 Audio Output Trans.
T 7 Audio Input Trans.
T 8 Power Trans.
T 9 Osc. Inductors

L 1 Isolating Reactor
L 2 Speaker Field (570 Ohm)
L 3 Osc. Tracking Coil

©John F. Rider, Publisher

MODEL 2-ODM-578

Circuit Data
Alignment, Changes
Voltage, Coil Data
Socket, Trimmers
Phono. Connections

GAMBLE-SKOGMO, INC.

10 Tube - 3 Band

All-Wave High Fidelity Receiver

This model is a three band receiver with a tuning range in each band as shown in the specifications above. Three band coverage is accomplished by means of three sets of R. F. and oscillator coils and a three section triple throw switch.

Referring to the schematic circuit diagram, Fig. 2, T1 and T2 are the antenna and interstage R. F. transformer assemblies and T9 is the oscillator coil assembly. The standard wave, 1st and 2nd short wave coils in each assembly are indicated by the letters B, C and D respectively. The three sections of the band switch are designated in the schematic as the antenna, interstage and oscillator sections.

The band switch completes connections to the coils in use. It also short circuits the R. F. transformer secondary and oscillator coil of lower frequency not in use.

The antenna transformer with tuned secondary feeds into a type 6K7 R. F. amplifier tube. The output of this tube is fed through the interstage R. F. transformer with tuned secondary into another 6K7 tube which functions as the 1st detector.

A separate type 76 tube is employed in the oscillator circuit. Referring to the oscillator assembly T9, Fig. 2, B, C and D refer to the standard wave, 1st short wave and 2nd short wave oscillator coils respectively. The oscillating circuit is always resonant at 456 KC above the frequency to which the R. F. amplifier is tuned.

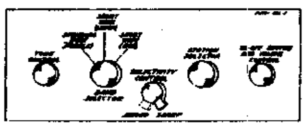

Fig. 1—Arrangement of Controls

The oscillator potential is fed into the cathode circuit of the 6K7 first detector tube. This results in the intermediate or beat frequency of 456 KC being present in the plate circuit of this tube.

Two stages of I. F. amplification are employed using 6K7 tubes. The primaries and secondaries of the first and second I. F. transformers and the primary of the 3rd I. F. transformer are tuned by small trimmer condensers.

Selectivity Control—Referring to the 1st and 2nd I. F. transformers T3 and T4 in Fig. 2, it will be noted that there are coupling windings shown in the illustration below the primaries.

When the selectivity control is in the sharp position, the coupling winding is open circuited and the loose coupling which exists between the primary and secondary of this transformer results in high selectivity.

When the selectivity control is in the broad position, the coupling winding which is wound under the primary is connected in series with the secondary. This provides overcoupling which results in a greatly widened resonance curve. Passage of a wide range of audio frequencies is thus obtained.

Dual Volume Control—A dual manual volume control is employed. In one section the audio voltage applied to the 76 1st audio tube is varied (R10). In the other section the R. F. and 1st I. F. bias is varied (R3). The purpose of the latter section is to reduce the sensitivity of the receiver at low volume settings in order to cut down noise pick-up between stations. The variable section R3 is shorted out through contact No. 4 of the interstage section of the band selector when in the 2nd short wave position.

A type 76 tube functions as a diode second detector. AVC voltage is applied through isolating resistors to the control grid circuits of the R. F. and 1st I. F. tubes. The audio voltage developed across volume control resistor R10 is applied through the movable arm to the control grid of the Type 76 1st audio tube. Transformer coupling is used between the first audio stage and the output stage which employs two type 45 tubes. A type 80 full wave rectifier tube is used in the power unit.

Alignment and Calibration

Correct alignment is extremely important in connection with all wave receivers. The receivers are all properly aligned at the factory with precision instruments and realignment should not be attempted unless all other possible causes of the faulty operation have first been investigated and unless the service technician has the proper equipment.

A signal generator that will provide an accurately calibrated signal at 456, 1730, 1500, 600, 5800, 5000, 18,300, 15,000 and 6000 KC and an output indicating meter are required. It will be practically impossible to align the receiver if unsatisfactory apparatus is used. If a station is tuned in with the selectivity control in the broad position and this control is then turned to the sharp position, the station may disappear. This is not an indication that the receiver is out of alignment.

Use a non-metallic screwdriver for the adjustments. The complete procedure is as follows:

I. F. Adjustment

Set the signal generator for a signal of 456 KC.

Connect the output of the signal generator through a 0.1 mf. condenser to the grid of the 1st detector.

Connect the ground lead of the receiver to the ground post of the signal generator.

Turn the band selector to the Range B position (standard wave band—purple dial color).

Turn the selectivity control to the sharp position and keep it in this position for all adjustments.

Turn the volume control to the maximum position.

Attenuate the signal from the signal generator to prevent the levelling-off action of the A.V.C.

Then adjust the five I.F. trimmers until maximum output is obtained. The adjusting screws for these condensers are reached from the top of the chassis, and the location is shown in Fig. 5.

Range B Alignment

1730 KC Adjustment

Set the signal generator for 1730 KC.

Turn the rotor of the tuning condenser to the full open position.

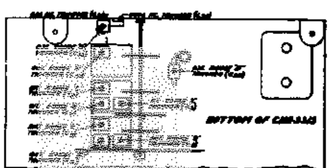

Fig. 3—Location of Trimmers

Keep the band selector in the standard wave position.

Connect the antenna lead of the receiver through a 200 mmf. condenser to the output of the signal generator.

For this and all subsequent adjustments keep the volume control at the maximum position and attenuate the signal from the signal generator to prevent A.V.C. action.

Adjust the oscillator Range B trimmer (C32) until maximum output is obtained. The location of this trimmer is shown in Fig. 3.

1500 KC Adjustment

Set the signal generator for 1500 KC.

Turn the rotor of the tuning condenser carefully until maximum output is obtained.

Loosen the pointer set screw and set the large pointer at the 1500 KC mark on the standard wave band scale. Retighten the set screw.

Adjust the interstage Range B trimmer (C7) and antenna Range B trimmer (C2) to maximum.

Do not change the setting of the oscillator Range B trimmer.

600 KC Adjustment

Set the signal generator for 600 KC.

Turn the tuning condenser rotor until maximum output is obtained.

Turn the rotor slowly back and forth at the same time adjusting the 600 KC trimmer until the peak of greatest intensity is obtained. See Fig. 3 for location of this trimmer.

Range C Alignment

5800 KC Adjustment

Set the signal generator for 5800 KC.

Connect the antenna lead of the receiver through a 400 ohm resistor to the output of the signal generator.

Turn the rotor of the tuning condenser to the full open position.

Turn the band selector to the Range C position (1st short wave band—green dial color).

Adjust the oscillator Range C trimmer (C30) until maximum output is obtained. See Fig. 3 for location of this trimmer.

5000 KC Adjustment

Set the signal generator for 5000 KC.

Turn the rotor of the tuning condenser carefully until maximum output is obtained.

Adjust the interstage Range C trimmer (C8) and antenna Range C trimmer (C3) to maximum.

Do not change the setting of the oscillator Range C trimmer.

Range D Alignment

18,300 KC Adjustment

Set the signal generator for 18,300 KC.

Keep the antenna lead of the receiver connected through the 400 ohm resistor to the output of the signal generator.

Turn the rotor of the tuning condenser to the full open position.

Turn the band selector to the Range D position (2nd short wave band—red dial color).

Adjust the oscillator Range D trimmer (C29) until maximum output is obtained. See Fig. 3 for location of this trimmer.

15,000 KC Adjustment

Set the signal generator for 15,000 KC.

Turn the rotor of the tuning condenser carefully until maximum output is obtained.

Adjust the interstage Range D trimmer (C9) and antenna Range D trimmer (C4) to maximum.

When adjusting the interstage Range D trimmer, it will be necessary at the same time to turn the tuning condenser rotor slowly back and forth until the peak of greatest intensity is obtained.

Then go back and repeat the procedure as given for the 18,300 KC adjustment. If it is found necessary to make any appreciable change in the setting of the oscillator Range D trimmer, the 15,000 KC adjustment must be repeated.

Do not make any further change in the setting of the oscillator Range D trimmer.

6000 KC Adjustment

Set the signal generator for 6000 KC.

Turn the tuning condenser rotor until maximum output is obtained.

Turn the rotor slowly back and forth at the same time adjusting the 6000 KC trimmer until the peak of greatest intensity is obtained. See Fig. 3 for location of this trimmer.

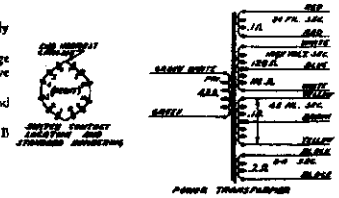

Changes in Early Models

In the early models of this receiver the tone control resistor (R11) was connected as a series variable resistor connecting in series through the condenser C23 between the grids of the 45 tubes in the audio output stage. In the later models it is employed as a potentiometer in the manner shown in Fig. 2.

The 100,000 ohm resistor (R18) was not used in the early models. Condenser C21 was connected directly to resistor R7.

The type 6K7 metal tubes replace the type 6D6 glass tubes which were used in the early models.

Condenser C35 was added to the oscillator coil standard wave section in later models. It is not, however, used in all cases but only when this capacity is required in this circuit.

Phonograph Connections

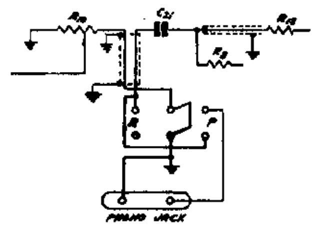

Fig. 7—Phonograph Connections

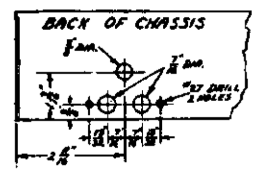

Fig. 8—Details of Panel Drilling for Phono Assembly

Twenty-five Cycle Receivers

The twenty-five cycle receiver differs from the sixty cycle receiver only in the fact that a different power transformer is used. The correct power transformer is shown in the parts list.

The twenty-five cycle receiver can be operated satisfactorily from a sixty cycle power supply. However, the reverse is not true, the sixty cycle receiver cannot be operated from a twenty-five cycle power supply.

A 115-230 Volt, 40 to 60 cycle as well as other power transformers with special power ratings are also available for this model.

VOLTAGES AT SOCKETS
Line Voltage, 115 - Volume Control at Maximum
Antenna Shorted to Ground

Type of Tube	Function	Heater or Filament	Plate to Ground	Screen to Ground	Cathode to Ground	Cathode M.A.
6K7 (6D6)	R F	6.1	265	120	3.7	9.0
6K7 (6D6)	1st Det.	6.1	265	110	9.5	3.8
76	Osc.	6.1	110			5.8
6K7 (6D6)	1st. I. F.	6.1	265	120	3.7	9.0
6K7 (6D6)	2nd I. F.	6.1	265	120	3.7	9.0
76	2nd Det.	6.1				
76	1st A. F.	6.1	265		14.	5.0
45	Power	2.5	265		50.(1)	22
80	Rectifier	4.9				50. (total)

(1) As read with 500 Volt Scale. Grid to Ground.

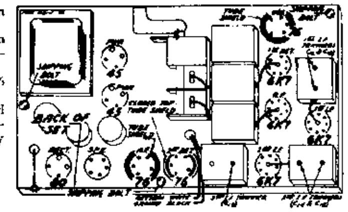

Fig. 5—Location of Tubes

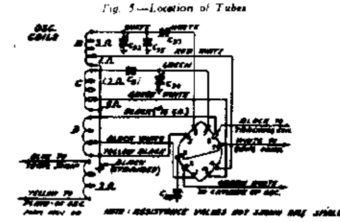

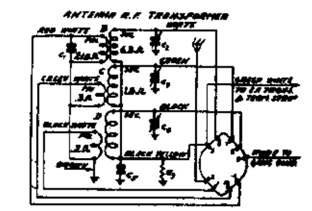

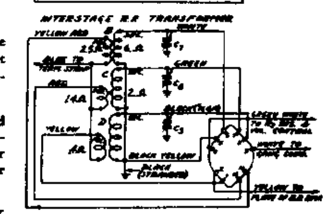

Sept., 1935

GAMBLE-SKOGMO, INC.

Model 580

MODEL 580
Schematic
Voltage, Socket
Trimmers, Data

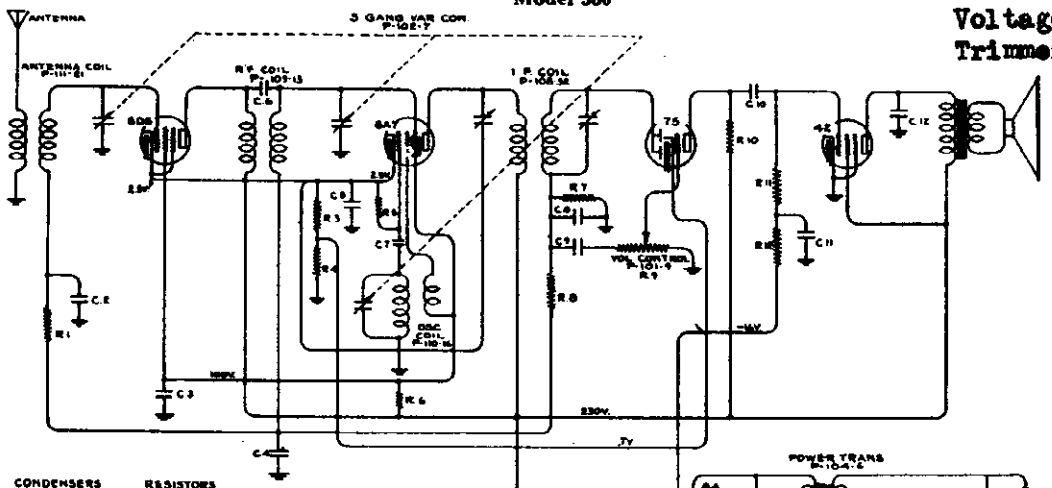

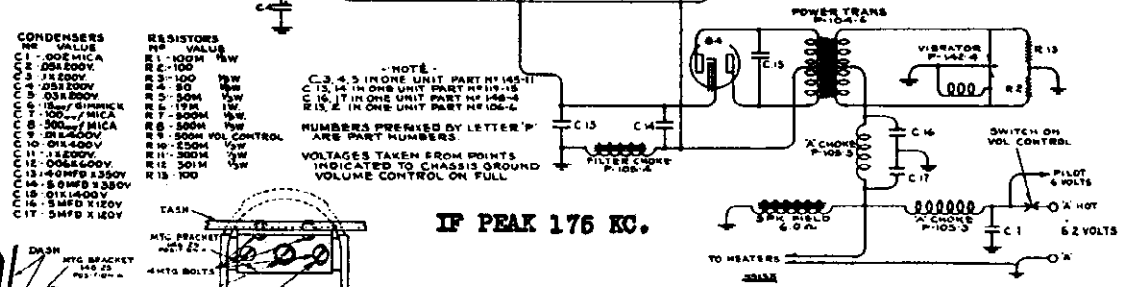

CONDENSERS		RESISTORS	
NO	VALUE	NO	VALUE
C1	.006 MICA	R1	100M 1W
C2	.05M 200V.	R2	100
C3	.1M 200V	R3	100 1W
C4	.05M 200V	R4	80 1W
C5	.03M 200V	R5	50M 1W
C6	.1M 200V GIMMICK	R6	.15M 1W
C7	.100 MMF MICA	R7	500M 1W
C8	.300 MMF MICA	R8	500M 1W
C9	.01M 400V	R9	500M VOL CONTROL
C10	.01M 400V	R10	250M 1W
C11	.1M 200V	R11	300M 1W
C12	.006M 400V	R12	.5M 1W
C13	40 MFD 350V	R13	100
C14	8 MFD 350V		
C15	.01M 400V		
C16	8 MFD 120V		
C17	8 MFD 120V		

NOTE:
C.3.4.5 IN ONE UNIT PART NO 145-11
C 13, 14 IN ONE UNIT PART NO 119-15
C 16, 17 IN ONE UNIT PART NO 148-4
R 13, 2 IN ONE UNIT PART NO 106-4
NUMBERS PREFIXED BY LETTER 'P' ARE PART NUMBERS.
VOLTAGES TAKEN FROM POINTS INDICATED TO CHASSIS GROUND VOLUME CONTROL ON FULL

IF PEAK 175 KC.

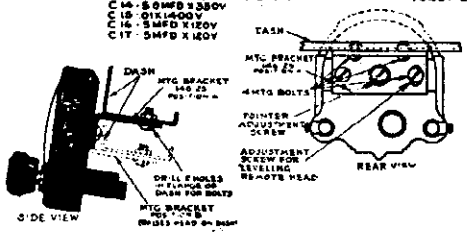

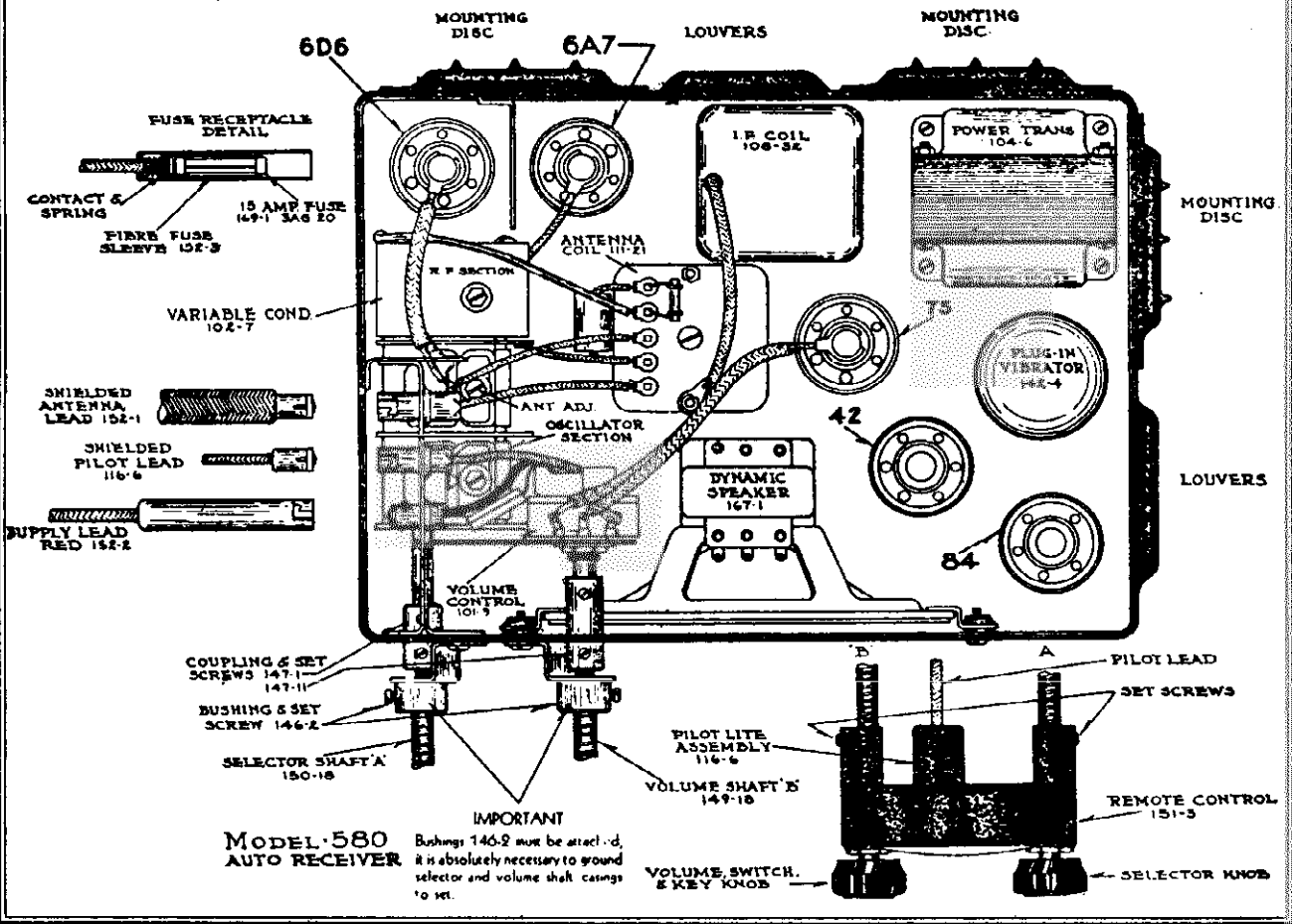

MODEL 580 AUTO RECEIVER

Bushings 146-2 must be attached, it is absolutely necessary to ground selector and volume shaft castings to set.

©John F. Rider, Publisher

©John F. Rider, Publisher

INSTALLATION AND SERVICE INSTRUCTIONS

MODEL 580

FIVE TUBE-SUPERHETERODYNE AUTO RADIO

TUBE COMPLEMENT:

1—Type 6D6—remote cut-off pentode as an R. F. amplifier.
1—Type 6A7—pentode as an oscillator and first detector.
1—Type 75 —duplex diode triode second detector automatic volume control and first audio.
1—Type 42 —pentode output tube.
1—Type 84 —high vacuum full wave rectifier.

ACCESSORIES:

The carton of accessories packed with this set contains the following:
1—No. 152-1 shielded plug-in type antenna cable.
1—No. 152-2 plug-in battery cable.
1—No. 149-18 flexible volume control shaft (slotted fitting).
1—No. 150-18 flexible selector shaft (key fitting).
2—No. 166-2 brackets for anchoring flexible shafts to set container.
2—No. 1956—3" x 3/8" carriage bolts and nuts for mounting set to bulk head.
2—No. 134-1—3/8" x 1" iron washers.
2—No. 134-2—3/8" lockwashers.
6—No. 156-2 set screws, 4 for attaching flexible cables to set, 2 for anchoring cables to brackets.
4—No. 155-6—No. 6 x 3/8" binding head self-tapping screws for attaching brackets (No. 166-2).
1—168-1—Spark plug type suppressors.
1—168-2—Distributor type suppressor.
1—No. 148-1 govern or condenser.
1—No. 148-3 ammeter condenser.
1—No 151-3 remote control head.
1—No. 116-6 pilot light assembly complete.
1—No. 166-3 Die cast mounting bracket.
1—No. 166-13 Steering column strap.
1—No. 116-5 6-8 volt bulb.
1—No. 169-1 15 amp. fuse.
1—No. 152-3 Fuse insulating sleeve.

RECEIVER INSTALLATION:

Determine most satisfactory or desirable mounting position. In most cases it will be found that the receiver can be mounted on the car bulk head, above and to the right of the steering post.

Use the paper template included with these instructions and which is the same size as the set. Mark location for two mounting bolts if mounted on the long side and for one mounting bolt if mounted on the short side.

Then drill two (2) one-half inch (1/2") holes, making certain that the point around the hole on the engine side of fire wall or bulk head is scraped clean to insure a good ground connection between receiver and the frame of the car. Assemble brackets number 166-2 to case with self-tapping screws.

Insert bolts through dash, assemble plain, lockwashers and nuts on engine side, then hang receiver over bolt heads and tighten nuts securely.

Mount the remote control unit on steering column by means of mounting bracket or attach to instrument panel or under dash (see illustration).

Two flexible shafts are furnished, one with a slotted fitting on one end, which is the volume control shaft (number 149-18), the other is the selector shaft, with key fitting at one end (number 150-18).

Make certain that the outer casings of flexible shafts go into remote control housings for approximately five-sixteenths of an inch and tighten set screws to secure cables. If cables are pushed too far into remote control head, shafts will not turn freely. Always try to install drive shafts in as straight a line as possible from remote control to set. AVOID SHARP BENDS IN CABLES.

IMPORTANT—READ CAREFULLY:

We are prepared to exchange, without charge, our standard number 149-18 and 150-18, eighteen inch cables for twenty-four inch cables, number 149-24 and 150-24. You will find that 99% of the installations can be made with the standard eighteen inch cables, and bear in mind that the shorter the cable, the smoother the drive.

DASH MOUNTING FOR THE REMOTE CONTROL HEAD:

The majority of the new 1935 model automobiles have provisions made for mounting the remote control head of an auto radio on the dash. We have available special escutcheon plates for this purpose which can be secured upon request at an additional cost of $1.00. *When requesting escutcheon plates specify make and model of the car, also the finish of the dash.*

Following is a list of 1935 model automobiles which contain removable ash tray receivers and which are able to accommodate the *remote control head of our model 580 auto receiver.*

Chrysler Airstream	Nash	Reo
Dodge	Packard	Ford V-8
Plymouth	Graham DeLuxe	
De Soto Airstream	Hupmobile	

Following is a list of 1935 model automobiles which do not contain ash tray receivers but with the aid of the special drilling dimensions furnished herewith the left hand panel on the dash may be drilled to accommodate our regular remote control head.

La Fayette (Nash)	Graham (Standard)
Franklin	Studebaker

For installation of our remote control head on the following cars we recommend standard steering column or dash mounting with the aid of a bracket:

Auburn	Terraplane	De Soto & Chrysler Airflow
Buick	Pontiac	Hudson
Cadillac	Chevrolet—Standard	Lincoln
La Salle	& De Luxe	Oldsmobile

Many of the 1931 model automobiles contain the same size ash tray receiver as the 1935 models and naturally installation of the remote control head can be made on these models.

We have found that our model 580 auto receiver will fit above the steering column on the fire wall of 75% of the late model automobiles and for dash mounting of the remote control head this location works out very satisfactorily.

The Cadillac, La Salle, Chevrolet, Pontiac and Oldsmobile 1935 automobiles have special blank escutcheon plates on the dash which are intended for remote control heads for auto receivers. The cut-out behind these blank escutcheons will not accommodate our remote control head and for installation in these models we recommend using standard steering column mounting for the remote control head or dash mounting using a bracket as illustrated in drawings contained herein.

DIAL ADJUSTMENT:

Mount control head to steering column by means of bracket and strap or under dash by means of bracket or to instrument panel (see illustrations). Attach cables as above. Tune set to some section of a known frequency (between 800 and 1200 K.C.), hold selector knob, then with a screw driver adjust the slotted screw on back of the control head, and in that way adjust the dial pointer to the correct frequency setting.

CONNECTIONS TO BATTERY:

The battery cable, number 152-2, (red wire with fuse receptacle at one end and terminal lug at other end) must be connected to battery terminal of ammeter. At the same time connect ammeter capacitor, number 148-3, to battery terminal of ammeter, other end of condenser to any convenient grounded screw on back of instrument panel. Make certain that insulating sleeve is slipped over fuse when fuse is placed in receptacle, *before* inserting in receiver (see illustration). All bypass leads should be as short as possible.

When connected properly, the discharge due to current drawn by the receiver should not indicate on the ammeter. This is important, since if improperly connected, as shown by the deflection of ammeter, additional motor interference may be encountered.

PILOT LIGHT:

Pilot light assembly, part number 116-6, a shielded cable, plugs into the set and to the rear of the remote control unit (see illustrations).

ANTENNA CONNECTION:

The antenna is connected to the receiver by means of the antenna cable, number 152-1. The antenna wire is the single black wire projecting from the end of the cable. Splice this wire to the roof antenna lead and ground the pig-tail shielding as close to the corner post of the car as possible.

OPERATION:

Place key (knob) in lock of left hand control of the remote control unit. After waiting approximately 45 seconds for tubes to heat up, rotate station selector, right hand knob, until a desirable program is heard. Decreasing will very seriously affect the tone quality of this receiver.

MOTOR NOISE SUPPRESSION:

The ignition system of every automobile generates high frequency electrical interference. This high frequency interference arising from the ignition coil, the distributor and the spark plugs must be properly suppressed in order to obtain satisfactory reception. Each car will present more or less an individual problem but there is a definite procedure to follow which holds true in every case.

This first essential procedure is to disconnect the high tension leads to the spark plugs and attach the spark plug suppressors (168-1) (for V 8 Fords 168-4) the special distributor type suppressor (168-2) which is inserted in the center contact of the distributor as indicated in the illustration of a typical installation. (NOTE V 8 FORD USES NO DISTRIBUTOR SUPPRESSOR.) For cap type distributor, exchange the standard plug type distributor suppressor (168-2) for a special cable type suppressor (168-3) from your dealer. In some few cases, such as Buicks it is sometimes necessary to use cable type (168-3) suppressors. This type of suppressor is inserted in the leads running from the distributor to the spark plugs and which are concealed underneath the metal plate which covers the spark plugs.

After the spark and distributor suppressors have been properly fastened the next in importance is the generator condenser (148-1), this filters a high pitched whining noise which would otherwise be heard as the motor is accelerated.

It is sometimes necessary in cars where the ignition coil is located under the dash, to use an additional capacitor (148-1) obtainable from your dealer. It must be installed between the battery side of the ignition coil and the frame of the car. Next connect capacitor (148-3) from the battery side of ammeter to frame of car. This is necessary in practically every installation and a good connection to the frame of the car is of utmost importance.

After standard suppression has been applied and the hood clamped down to prevent radiation, the receiver should be turned on and the dial turned off a station, with the volume control at maximum. If motor noise is still objectionable the next step is to determine whether the interference is originating through chassis pickup or from the antenna.

To check for chassis pickup, disconnect the antenna from the antenna cable and ground the antenna lead to shield of cable, or remove antenna cable. Chassis pickup can be reduced by reducing the gap between plug contacts and the rotating arm in the distributor head. To do this, apply solder to the end of the rotor arm. Replace the rotor in the distributor and turn the engine over slowly with the crank in order to clean the excess solder. The rotor should not brush or wipe the contacts inside the distributor cap, but should just clear them. As an additional precaution check the breaker points. They should be thoroughly cleaned and adjusted or new points installed if they are badly worn. The ignition system of a car must be kept in good condition and leaky cracked high tension wires and bad spark plugs should be replaced. In many cars the low tension battery leads, etc., are grouped together with the high tension wires. These leads will very often pick up motor noise and feed it into the receiver through the battery circuit. In cases such as these it will be necessary to separate the low tension from the high tension wires and run them through another hole if they run from the engine compartment up to the instrument panel. This condition is particularly true on the V 8 Ford as the battery and primary leads run through a special tube which also houses the high tension leads. Shield and ground these leads. It is also necessary on V 8 Fords to install a capacitor between the primary terminal of the coil and ground.

Cars with floating power must have the motor bonded to the bulkhead and again to the frame to provide a direct path for the high frequency interference developed in the ignition system. ¾" copper braid will be necessary, SMALL DIAMETER WIRE WILL NOT DO. Bond flexible shaft leads, such as fuse wheeling, choke wires, etc., which pick up motor noise and reradiate it into the car. In extreme cases it has been found necessary to ground the steering column. Free wheeling cables should be grounded at the point at which they go through the fire wall of the car.

On cars which have a wooden bulkhead it is necessary to line the motor side with thin sheet metal and ground. This will prevent interferance from entering the inside of the car and from there being picked up by the antenna. It is also necessary in some installations to connect a capacitor from the hot side of the dome light wire to frame of the car. This lead can usually be found by referring to the electrical wiring diagram of the car. If the ignition coil is mounted inside the driving compartment, it may be necessary to shield the high tension lead running from the coil to the distributor. This can be done effectively, however, if the wire has rubber insulation. Where the car is so equipped this wire should be replaced with a good quality high tension wire such as Packard cable. When applying the shield over this wire be sure that it terminates at least an inch from both ends of the lead and that the shield is grounded at both ends; one end under the dash and the other to the engine. It may be necessary to by-pass the electrical connections of all gauges such as oil, water, gas (Hudson-Terraplane).

The foregoing rules should remove any trace of chassis pickup. Now connect the antenna to the receiver and test for motor noise pickup. It is entirely probable that if any noise is present it will be very slight and only noticeable between stations.

No absolute rule for complete motor noise elimination can be specified inasmuch as many times two cars of the same make present entirely different problems and require bending or shielding at different points.

A word or two concerning antennas; naturally the performance of any radio depends on the effectiveness of the antenna. The later model cars are coming through with very good Antennas, already installed and no trouble should be experienced from this angle with of course an occasional exception. The older cars present a more difficult problem and naturally the service man will have to take cases of this nature into consideration. Many of the older cars on the market today have a wire network in the roof which is nothing more than ordinary chicken wire.

This wire network acts as a support to the roof and is in the majority of cases grounded directly to the body of the car at the point at which the roof meets the sides of the body. Service men frequently tack antennas to the underside of the top material in these cars, this is not satisfactory. There are but two things to do. Either an underslung (plate or strap) antenna must be used or the wire network must be cut from all grounds to the car. If this is done this network will in itself make a very good antenna, but it will be necessary to cut the wire network back for a distance of at least three inches from all sides of the car.

When running the lead-in up the corner post of the car to the roof antenna ground it every few inches to the frame of the body of the car. If this is not possible insulate it, otherwise scratchy noises will result.

Shield high tension leads.

The ignition system of car must be kept in good condition.

It is advisable to advance the generator charging rate in order to compensate for the additional drain of the receiver on car storage battery. THIS SHOULD BE DONE BY A COMPETENT SERVICE STATION.

BALANCING SET TO ANTENNA:

When this set has been installed and is ready for operation it may be found necessary (depending on antenna) to balance set to this antenna. This is accomplished as follows:

With the receiver tuned to a very weak station, about 1200 to 1400 (1300 to 1400 kilocycles) on the dial, adjust the antenna trimmer with a screw driver until maximum volume is attained. To reach the antenna trimmer remove the plug button from the top of the case.

SERVICE NOTES:

Model 580 is a five tube superheterodyne receiver with an intermediate frequency of 175 kilocycles and a tuning range of from 530 to 1550 kilocycles.

This receiver has been carefully designed to facilitate servicing, the top and bottom covers are both removable, any part is replaceable without removing the chassis from the cabinet. All adjustments are made without removing the chassis from the cabinet.

Should it ever become necessary or desirable to realign this receiver, the proper method is as follows:

I. F. ALIGNMENT:

1. With variable condenser at its maximum capacity position and with volume control full on, connect in series with a .1 mfd. condenser, an oscillator set at 175 kilocycles to the grid cap of the 6A7 tube.

2. Adjust trimming condensers of I. F. transformer, part number 108-32 (two adjustments) to resonance, as indicated on an output meter connected across the primary terminals of the speaker input transformer or between the plate and screen terminals of the type 42 output tube. The connection to the tube can be made by means of an adapter. Maximum deflection of the meter indicates resonance.

Note: I. F. transformer adjustments are accessible from the bottom of the chassis—the bottom cover must be removed.

R. F. ALIGNMENT:

1. Attach oscillator connected in series with a 200 mmfd. condenser to the antenna lead and with the variable condenser at its minimum capacity position (extreme right of its rotation) and with an oscillator set at 1550 kilocycles, adjust condensor trimmer of oscillator section (Front shaft end) to resonance.

2. Re-set oscillator to 1400 kilocycles, rotate variable condenser to pick up signal, adjust antenna (center section) and R. F. (rear section) trimmers to resonance.

3. Check alignment at 1400-1000-600-530 kilocycles by setting oscillator to these frequencies and picking up signal by rotating condenser.

4. Bend slotted plates of antenna and R. F. sections only if necessary. UNDER NO CIRCUMSTANCES BEND PLATES OF OSCILLATOR SECTION.

NOTES:

Voltages from chassis to different points are indicated on schematic circuit diagrams, and should be measured with a voltmeter having a resistance of 1000 ohms per volt.

Failure to operate, noisy or weak reception, may be due to defective tubes or poor contact between cap on top of tube and grid clip.

Tubes may be checked by replacing with another tube which is known to be good.

If fuse blows out frequently, and insulating sleeve has been properly placed over fuse, the trouble probably is in the vibrator and vibrator should be replaced.

NEVER ATTEMPT TO ADJUST VIBRATOR POINTS.

Case rattles may be due to one or more of the following:

Loose screws in top or bottom covers. Loose elements in tubes. Loose tube shield. Loose R. F. coil shield. Loose grill cloth.

GAMBLE-SKOGMO, INC.

MODEL 550
Schematic
Alignment, Parts

IF PEAK 456 KC.

C-1	.01	200 V	R-1	30,000
C-2	.05	200V	R-2	2,000,000
C-3			R-3	15,000
C-4	.00037 TUNING COND.		R-4	500,000
C-5	.0005 E MICA		R-5	500,000 VOL. CONTROL
C-6	.0005 PAD		R-6	500,000
C-7	.05	200 V	R-7	250,000
C-8	.25	200V	R-8	1,000,000
C-9	.01	200V	R-9	500
C-10	.0005	600V		
C-11	.05	200V		
C-12	.0005	600V		
C-13	.01	200V		
C-14	10 MFD.	25V ELECTROLYTIC		
C-15	.002	600 V		

MODEL 550
BATTERY RADIO

GENERAL: Always eliminate all possible sources of trouble external to the receiver itself, such as: defective aerial, ground, or lightning arrestor, tubes, batteries, loud speaker.

TUBE FUNCTIONS: "1A6" First detector—oscillator, "34" IF amplifier, "30" diode second detector, "32" first audio amplifier, "33" power tube.

CHECKING PARTS: The resistance of coils and resistors is shown on the circuit diagram together with condenser capacities. Any defective part, either shorted or open or greatly different in value than that specified will result in weak reception or none at all.

ALIGNMENT: If all tubes, batteries, and set parts check OK and sensitivity is still low it is probably due to the set being out of alignment. It is necessary to use a reliable test oscillator or signal generator having accurate calibration and positive attenuation.

IF ALIGNMENT 456 K.C.: Open tuning condenser (dial at high frequency end) connect signal generator to grid cap of 1A6 tube leaving present cap in place. Use a small condenser .002—.01 in series with the signal generator lead. Adjust all four IF trimmers, two in top of each IF can. Go over the adjustments several times—reducing the output of the signal generator to as low an output as will give an audible signal. It is best practice to use an output meter connected across the speaker to indicate "peak".

ANTENNA & OSCILLATOR ALIGNMENT:—Connect signal generator to antenna lead of set with tuning condenser open, adjust oscillator trimmer (rear section of tuning condenser) to peak on a 1730 K.C. signal from generator, close tuning condenser and adjust padder condenser (under chassis) on 540 K.C. signal, then recheck 1730 K.C. adjustment. Adjust antenna trimmer on 1000 K.C. signal.

Note: a strip of bakelite about three-sixteenths thick, one inch wide, and about six inches long with a slot sawed in one end will facilitate adjustment of padder screw.

DISTORTION: On sets bearing serial numbers below J 3604 a decided improvement can be made by the following changes:

1. Change R-7, 250,000 Ohm resistor to 100,000 Ohm resistor.
2. Remove R-4 500,000 Ohm resistor.
3. Short out C-9 .01 200 Volt condenser.
4. Change C-15, .002 800 Volt condenser, to .0035 Mica or 800 Volt paper.

Equivalent changes were made in circuit on models having serial numbers higher than J 3604.

PARTS PRICE LIST ON MODEL 550 CORONADO BATTERY TABLE RECEIVER

	List
E-17400—Assb.—Cable & Markers	$ .70
E-17383—Assb.—Dial Scale & Frame	.50
E-17195—Bushing—Pointer	.02
E-17372—Coil—Antenna	1.80
E-17135—Coil—Oscillator	1.60
E-17402—Condenser—Tuning	2.50
E-17071—Condenser—Padder .500 M. M. F.	.50
E-8875—Condenser—Mica .0002	.20
E-8874—Condenser—Tubular .0005 x 600V	.20
E-17002—Condenser—Tubular .002 x 800V	.20
E-8877—Condenser—Tubular .01 x 200V	.20
E-8661—Condenser—Tubular .05 x 200V	.20
E-17128—Condenser—Tubular .25 x 200V	.30
E-17080—Condenser—Electrolytic 12 x 35 V	.60
E-17403—Control—Volume	.80
E-17404—Pointer—Dial	.10
E-17374—Resistor—Candohm	.30
E-17164—Resistor—Carbon 15,000 Ohm	.20

	List
E-8601—Resistor—Carbon 50,000 Ohm	.20
E-8883—Resistor—Carbon 100,000 Ohm	.20
E-8602—Resistor—Carbon 250,000 Ohm	.20
E-8886—Resistor—Carbon 500,000 Ohm	.20
E-8766—Resistor—Carbon 1,000,000 Ohm	.20
E-8887—Resistor—Carbon 2,000,000 Ohm	.20
X-17311—Screw—Pointer, Binding Head	.02
E-17166—Socket—4-Prong #34	.20
E-17167—Socket—5-Prong #33	.20
E-17165—Socket—4-Prong #32	.20
E-17313—Socket—4-Prong #30	.20
E-17386—Socket—6-Prong #1-A-6	.20
E-17406—Switch—2-P. Gnd.	.30
E-17075—Transformer—H. Q. Input	1.50
E-17076—Transformer—H. Q. Output	1.50
E-17413—Celluloid—Dial Protector	.10
E-17114—Knob—Wood	.20
E-17169—Speaker—6¼" Magnetic	3.50

PRICES ARE SUBJECT TO CHANGE WITHOUT NOTICE

©John F. Rider, Publisher

MODEL 585
Series A,B,C
Socket Layouts,Trimmers
Parts, Change Data

GAMBLE-SKOGMO, INC

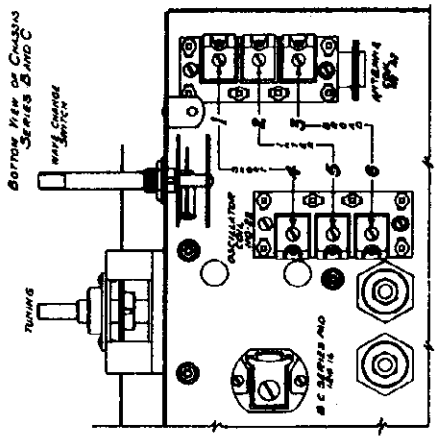

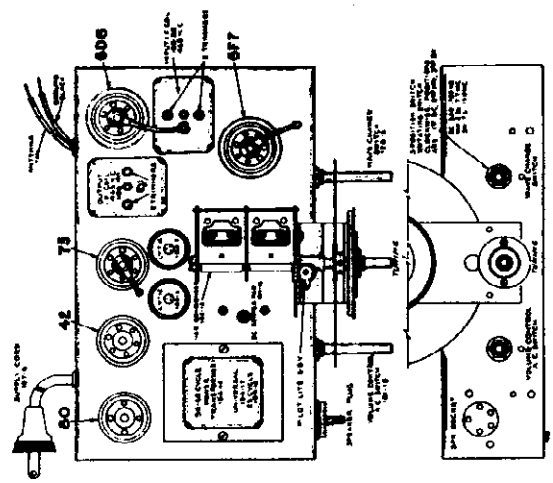

DESCRIPTION

Tubes

The Tube complement of this chassis is as follows:
1 Type 6F7—triode pentode as oscillator and first detector.
1 Type 6D6—remote cut-off pentode as I.F. amplifier.
1 Type 75—duplex diode triode as diode detector, A.V.C. and A.F.
1 Type 42—pentode output tube.
1 Type 80—high vacuum rectifier.

Series "A" chassis are equipped with dry electrolytic filter condensers and are serially numbered on paper tags which are attached to the line cord and to the inside of the cabinet.

Series "B" and "C" chassis are serially numbered on the back flange of the chassis, series "B" beginning with number "5A100S103" and up; series "C" chassis, beginning with number "5B105635C", differs only from series "B" in that the I.F. frequency was changed from 370 to 465 kilocycles.

Series "B" and "C" may be identified by the letter "B" and "C" at the end of the serial numbers.

Voltages taken from different points of circuit to chassis are measured with volume control full on, all tubes in their sockets and speaker connected, with a volt meter having a resistance of 1000 ohms per volt. These voltages are clearly indicated on the circuit diagrams of series "A," "B," and "C."

All voltages are measured with 119 volts on the primary of the power transformer.

Resistance of coils and transformer windings are indicated in ohms on schematic circuit diagram.

Transformers are available and chassis are sometimes equipped with universal transformers for operation on 40 and 60 cycles and with primary taps for 105, 125, 150, 220 and 250 volts (see illustrations) and also sometimes equipped with 25 cycle transformers with 105-115 volt or 220 volt primaries, not universal.

LIST OF REPAIR PARTS - MODEL 585 (SERIES A - B - C)

Parts Used Parts Used In Ser. A	In Ser. B	In Ser. C.	DESCRIPTION				
			CONDENSERS				
100-11	100-11	100-11	.01 x 400V—25%	Not Used	130-44	130-44	81K Ohm—1/2 Watt—20%—150V— Carbon
100-15	100-15	100-15	.015 x 400V—Plus 10%; Minus 20%	Not Used	130-46	130-46	560K Ohm—1/2 Watt—10%—100V— Carbon
100-19	100-19	100-19	.001 x 1500V—10%				
100-20	100-20	100-20	.05 x 200—25%	Not Used	130-47	130-47	1MEG Ohm—1/2 Watt—10%—100V— Carbon
Not Used	100-22	100-22	8 Mfd. x 350V Electrolytic				
Not Used	103-6	103-6	8 Mfd. x 450V Electrolytic	Not Used	130-48	130-48	1.5M Ohm—1/2 Watt—10%—80V— Carbon
Not Used	103-7	103-7	8 Mfd. x 300V Electrolytic				
118-1	118-1	118-1	Dual 1 x 250V—Plus 50%; Minus 10% (Series B & C use 3 per set)				POWER TRANSFORMERS
118-11	Not Used	Not Used	4-8-4 Mfd. Electrolytic	104-16	104-16	104-16	50/60 Cycle Power Transformer
118-12	Not Used	Not Used	8-8-4 Mfd. Electrolytic	104-17	104-17	104-17	Universal Power Trans.—40 Cy.
			Mfd. 25 V. 20%				Model 87
129-2	129-2	129-2	.0005 Mica—MT—20%	104-18	104-18	104-18	25 Cycle Power Transformer
129-5	129-5	129-5	.0001 Mica—MT—20%				
129-15	129-15	129-15	.00005 Mica—MT—5%				COILS
129-16	129-16	129-16	.00025 Mica—MW—5%	Not Used	105-9	Not Used	Antenna Choke Coil
Not Used	Not Used	Not Used	.005 Mica—MW—5%	Not Used	105-10	Not Used	Antenna Coil Complete
Not Used	Not Used	129-24	.000425 Mica—MT—5%	Not Used	108-36	Not Used	Input I. F. Transformer Complete
			RESISTORS	Not Used	108-37	Not Used	Output I. F. Transformer Complete
130-8	130-8	130-8	820M Ohm—1/2 Watt—20%—100V— Carbon	Not Used	108-38	Not Used	Output I. F. Transformer Complete
130-11	130-11	130-11	250K Ohm—1/2 Watt—20%—50V— Carbon	Not Used	108-39	Not Used	Input I. F. Transformer Complete
				Not Used	108-40	Not Used	Output I. F. Transformer Complete
130-13	130-13	130-13	50M Ohm—1/2 Watt—20%—20V— Carbon	Not Used	110-13	Not Used	Oscillator Coil Complete
130-18	130-18	130-18	1 Meg Ohm—1/2 Watt—20%—100V— Carbon	Not Used	110-14	Not Used	Oscillator Coil Complete
130-19	130-19	130-19	1 Meg Ohm—1/2 Watt—20%—100V— Carbon	Not Used	111-16	Not Used	Oscillator Coil Complete
130-20	130-20	130-20	100M Ohm—1/2 Watt—20%—50V— Carbon	Not Used	111-17	Not Used	Antenna Coil Complete
Not Used	130-32	130-32	250 Ohm—1/2 Watt—20%—10V— Wire W.	Not Used	111-18	Not Used	Antenna Coil Complete
130-38	Not Used	Not Used	2 Meg Ohm—1/2 Watt—20%—20V— Carbon	Not Used	111-27	Not Used	Antenna Coil Complete
130-39	130-39	130-39	700 Ohm—1/2 Watt—20%—20V— Carbon				SOCKETS
130-40	Not Used	Not Used	10K Ohm—1/2 Watt—20%—150V— Carbon	121	121	121	Four Prong Socket—Type Mi
130-41	Not Used	Not Used	600 Ohm—1/2 Watt—20%—20V— Carbon	121	121	121	Five Prong Socket—Speaker
130-42	130-42	130-42	20M Ohm—1/2 Watt—20%—100V— Carbon	121	121	121	Six Prong Socket—Type 42
				121	121	121	Six Prong Socket—Type 75
				121	121	121	Six Prong Socket—Type 6D6
				121	121	121	Seven Prong Socket—Type 6F7
							MISCELLANEOUS
				101-18	101-18	101-18	Volume Control
				102-12	102-12	102-12	Two Gang Variable Condenser
				106-13	106-13	Not Used	Metal Clad Resistor
				107-5	107-5	107-6	Line Cord

©John F. Rider, Publisher

GAMBLE-SKOGMO, INC.

MODEL 585
Series A,B,C
Schematics,Voltage

SERIES A

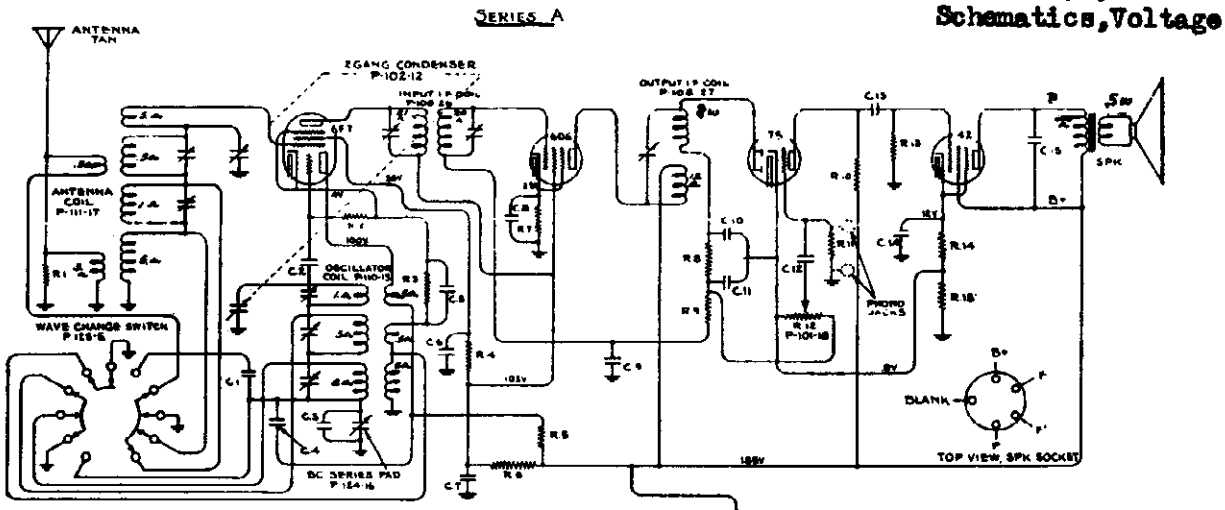

LEGEND

CONDENSERS		RESISTORS	
No	VALUE	No	VALUE
C.1	287 $\mu\mu$f MICA	R.1	800Ω ½W.
C.2	100 " "	R.2	50MΩ "
C.3	475 "	R.3	700Ω "
C.4	.1 X 200V	R.4	100MΩ "
C.5	.1 X 200V.	R.5	20MΩ ½W.
C.6	.1 X 200V	R.6	1MΩ ½W.
C.7	.1 X 200V	R.7	200Ω "
C.8	.1 X 200V	R.8	50MΩ ½W
C.9	.1 X 200V.	R.9	1MEG "
C.10	500 $\mu\mu$f MICA	R.10	250MΩ "
C.11	500 $\mu\mu$f MICA	R.11	2MEG "
C.12	.05 X 200V	R.12	500MΩ VOL. CONTROL
C.13	.01 X 400V	R.13	500MΩ ½W.
C.14	40 MFD X 25V	R.14	500Ω "
C.15	.015 X 400V.	R.15	35Ω "
C.16	3.0 MFD X 250V		
C.17	40 MFD X 300V		

NOTE
C.7, C.9 ARE IN ONE UNIT P-118-1
C.14, C.16, C.17 ONE UNIT LYTIC P-119-11
R.7, R.14, R.15, ONE UNIT P-106-18

NUMBERS PREFIXED BY LETTER 'P' ARE PART NUMBERS.

VOLTAGES TAKEN FROM POINTS INDICATED TO CHASSIS GROUND. VOLUME CONTROL ON FULL.

WAVE CHANGE SWITCH P-125-6 - 3 POSITIONS, ROTATING CLKWISE -
1st POSITION - BC. 1720-540 KC
2nd " - SW. 7.6 - 2.3 MC
3rd " - SW. 23.0 - 7.5 MC
SWITCH SHOWN AT SW POSITION

TUNING RANGE—SERIES A:
Standard Broadcast Band
540 - 1720 Kilocycles
Intermediate Band
2.3 - 7.6 Megacycles
Short Wave Band
7.5 - 23.0 Megacycles

TUNING RANGE—SERIES B & C:
Standard Broadcast Band
530 - 1720 Kilocycles
Intermediate Band
2.35 - 7.7 Megacycles
Short Wave Band
7.6 - 19.0 Megacycles

I. F. FREQUENCY:
Series A, Series B } 370 K.C.
Series C 465 K.C.

Series B&C

SERIAL NUMBERS
SERIES B 341005&10... UP
SERIES C 381056&350 UP

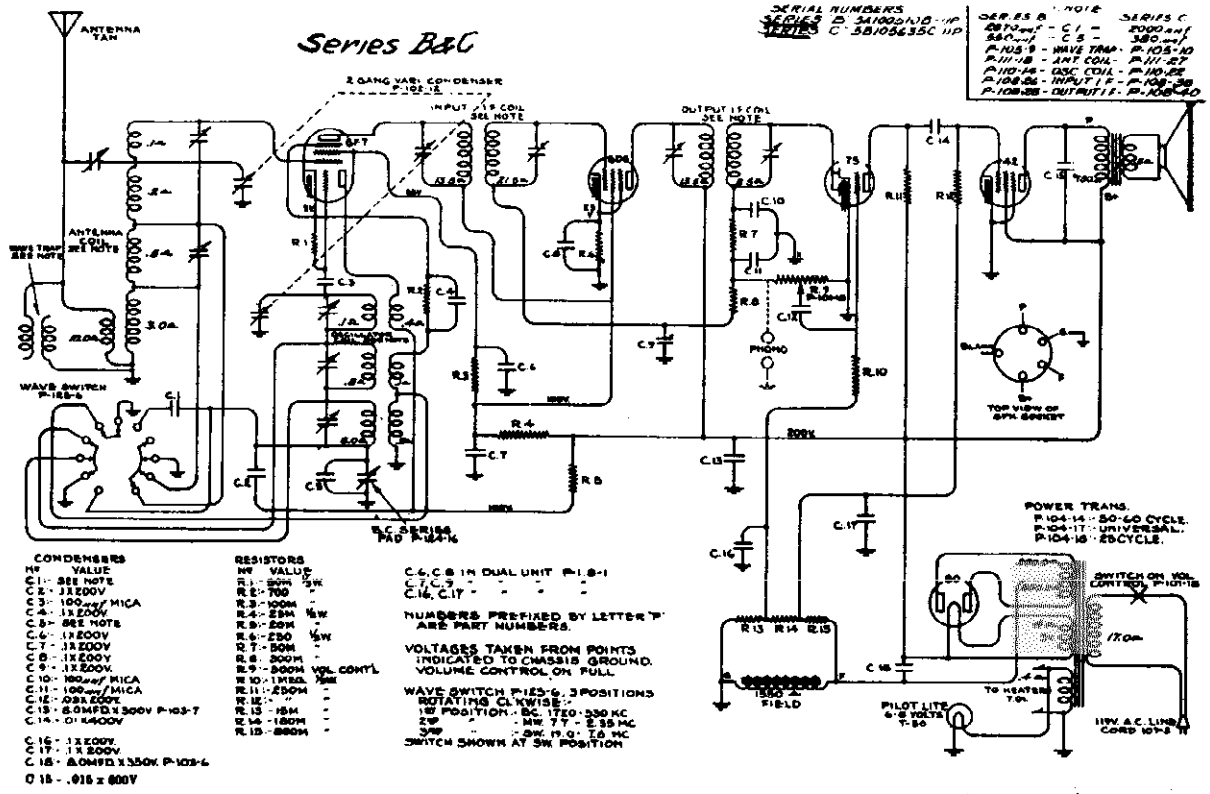

CONDENSERS		RESISTORS	
No	VALUE	No	VALUE
C.1	SEE NOTE	R.1	80Ω 2W.
C.2	.1 X 200V	R.2	700 "
C.3	100 $\mu\mu$f MICA	R.3	100M "
C.4	.1 X 200V	R.4	25M "
C.5	SEE NOTE	R.5	20M "
C.6	.1 X 200V	R.6	250 ½W
C.7	.1 X 200V	R.7	50M "
C.8	.1 X 200V	R.8	200M "
C.9	.1 X 200V.	R.9	500M VOL CONT'L
C.10	100 $\mu\mu$f MICA	R.10	1MEG ½W
C.11	100 $\mu\mu$f MICA	R.11	250M "
C.12	.05 X 200V	R.12	" "
C.13	8.0 MFD X 300V P-103-7	R.13	15M "
C.14	.01 X 400V	R.14	180M "
C.16	.1 X 200V.	R.15	880M "
C.17	.1 X 200V.		
C.18	8.0 MFD X 350V. P-103-6		
C.19	.015 X 600V		

C.6, C.8 IN DUAL UNIT P-118-1
C.7, C.9 " " " "
C.14, C.17 " " " "

NUMBERS PREFIXED BY LETTER 'P' ARE PART NUMBERS.

VOLTAGES TAKEN FROM POINTS INDICATED TO CHASSIS GROUND. VOLUME CONTROL ON FULL.

WAVE SWITCH P-125-6, 3 POSITIONS ROTATING CLKWISE -
1st POSITION - BC. 1720-530 KC.
2nd " - MW. 7.7 - 2.35 MC
3rd " - SW. 19.0 - 7.6 MC
SWITCH SHOWN AT SW. POSITION

©John F. Rider, Publisher

©John F. Rider, Publisher

ALIGNING INSTRUCTIONS—SERIES A

Description of various dummy antennas used and referred to in these instructions:

(1) I.F. Dummy—Consists of a .1 mfd. condenser connected in series with the external oscillator.

(2) Broadcast Dummy—Consists of a 200 mmfd. condenser and a 20 ohm resistor connected in series with each other and in series with the external oscillator.

(3) Intermediate and Short Wave Dummy—Consists of a .1 mfd. condenser and a 400 ohm resistor connected in series with each other and in series with the external oscillator.

Resonance Indicator:

Use as a resonance indicator an output meter connected across the primary of the speaker input transformer, or by means of an adapter between the plate and screen terminals of the type 42 output tube. Maximum deflection of the meter indicates resonance. Use only enough signal to get a readily readable output. A low range output meter or the low scale of a multi-range volt meter should be used.

SERIES A

Alignment

No aligning adjustments should be attempted without first thoroughly checking over all other possible causes of trouble, such as poor installations, open or grounded antenna systems, low line voltages, defective tubes, condensers and resistors. In order to properly align this chassis, an oscillator (generator) is absolutely necessary. No aligning adjustments should be attempted with the chassis in the cabinet. To remove the knobs, pull them off and to take the chassis out of the cabinet, remove the three bolts by which it is fastened and the speaker plug which you will find on the front flange of the chassis.

Aligning I. F. Transformers

1. With volume control full on, the extreme right of its rotation, and with wave changing switch in the broadcast position, extreme left of its rotation, and with variable condenser at its minimum capacity position, plates entirely out of mesh, adjust the I.F. transformers (adjustments at the top of parts number 108-36 and 108-37—see top view).

   (a) Connect external oscillator in series with I.F. dummy antenna. With external oscillator adjusted to 370 kilocycles, in series with I.F. dummy antenna to the control grid cap of the type 6D6 tube and chassis ground, adjust output I.F. transformer, part number 108-37, to resonance.

Note: Output I.F. transformer, part number 108-37, has only one adjustment.

   (b) Move generator output clip from grid of 6D6 to grid cap of type 6F7 tube and align input I.F. transformer, part number 108-36, to resonance. NOTE: IT IS EXTREMELY NECESSARY TO ALIGN BOTH I.F. STAGES SEPARATELY.

Broadcast Band Alignment—
(540 - 1720 Kilocycles)

1. With wave changing switch in the broadcast position, extreme left of its rotation, and with gang condenser in its minimum capacity position, plates entirely out of mesh, and with external oscillator connected in series with broadcast dummy antenna to tan antenna lead and black ground lead, make the following adjustments:

   (a) Set external oscillator to 1720 kilocycles and adjust oscillator trimmer to resonance. This adjustment is the rear adjustment of a group of three located next to the variable condenser.

   (b) Readjust external oscillator to 600 kilocycles and adjust broadcast series pad to resonance by rotating condenser to approximately 600 kilocycles, rocking it slowly to and fro until by adjusting pad maximum output is obtained. This adjustment is located at the front of the chassis next to the variable condenser and wave changing switch.

   (c) Check for tracking and sensitivity at 1400 and 1000 kilocycles. Note: It is extremely necessary in making all of the above adjustments that the fundamental signal of the oscillator be tuned in and not the image frequency, which will fall below the fundamental.

Short Wave Band Alignment—
(7.5 - 23.0 Megacycles)

1. This band is aligned after the I.F. adjustments have been completed. Set wave selector switch in the short wave position, extreme right of its rotation, set pointer of dial to 21 megacycles.

   (a) With external oscillator set at 21 megacycles, and connected to the tan antenna lead in series with the short wave dummy and to the black ground lead, adjust the oscillator short wave trimmer until generator signal is picked up. This trimmer is the one closest to the front of the chassis of the group of three trimmers located next to the gang condenser (see top view of chassis).

   (b) Adjust short wave antenna trimmer to resonance. This adjustment is to the right of the 6F7 tube and is the one closest to the front of the chassis (see top view).

   (c) Re-set external oscillator to 9 megacycles and pick up oscillator signal by rotating variable condenser, moving dial pointer. Check for tracking and sensitivity and do not bend plates. Note: It is extremely necessary in making all of the above adjustments that the fundamental signal of the oscillator be tuned in and not the image frequency, which will fall below the fundamental.

Intermediate Band Alignment—
(2.3 - 7.6 Megacycles)

1. With wave selector switch in the center position and with dial pointer set to 7 megacycles, makes the following adjustments:

   (a) With external oscillator set at 7 megacycles and connected in series with the short wave dummy antenna to the tan antenna lead and black ground lead, same as for short wave adjustments, adjust center trimmer of oscillator coil, part number 110-13, until 7 megacycle signal is picked up. This is the center adjustment of a group of three located next to the gang condenser (see top view).

   (b) Adjust antenna trimmer to resonance, this adjustment is the rear of a group of two located at the right of the chassis next to the 6F7 tube (see top view).

   (c) Re-set external oscillator to 2.5 megacycles (2500 kilocycles), pick up signal by rotating condenser and moving dial pointer. Check for tracking and sensitivity. Do not bend plates. Note: It is extremely necessary in making all of the above adjustments that the fundamental signal of the oscillator be tuned in and not the image frequency, which will fall below the fundamental.

Service Notes

To check for open by-pass condensers, shunt each condenser with another of similar capacity and of the same voltage rating, which is known to be good, until the defective unit is located. Open by-pass condensers frequently cause oscillation and distorted tone. Defective and aborted electrolytic filter condensers cause excessive hum, motor-boating, low volume and a reduction in all D.C. voltages. Open or shorted electrolytic and by-pass condensers (across bias resistor of type 42 tube) will cause low volume and distorted tone.

Should the planetary vernier dial drive mechanism fail to function properly, it will probably be found to be due to a cracked or broken compression spring. The drive may be disassembled to replace the compression spring (part number 112-31) by removing the two screws which fasten it to the dial bracket. Before reassembling all parts should be carefully cleaned and a small amount of vaseline applied to the ball bearings. All other dial parts are hardened and should cause no trouble.

Notes—(Series "A" Only)

25 Cycle chassis differ from regular 60 cycle and 40 cycle chassis in that a larger electrolytic filter condenser is used. The regular condenser is part number 119-11 and the larger unit for the 25 cycle chassis is part number 119-12.

Part number 106-10, a metal clad resistor, consists of the following sections with resistances and wattages as noted: one, 500 ohms; one, 35 ohms, one, 900 ohms, all 1/3 watt, plus or minus 10%.

ALIGNING INSTRUCTIONS—SERIES "B" & "C"

Note: These instructions are written for series "C". The instructions are identical for series "B", except that for series "B" the I.F. frequency is 370 kilocycles and for series "C", 465 kilocycles. Also, the I.F. transformers are different:

Series "B"
Part No. 108-36—Input I. F. Trans.
Part No. 108-38—Output I. F. Trans.
Series "C"
Part No. 108-88—Input I. F. Trans.
Part No. 108-40—Output I. F. Trans.

Description of various dummy antennas used and referred to in these instructions:

(1) I.F. Dummy—Consists of a .1 mfd. condenser connected in series with the external oscillator.

(2) Broadcast Dummy—Consists of a 200 mmfd. condenser and a 20 ohm resistor connected in series with each other and in series with the external oscillator.

(3) Intermediate and Short Wave Dummy—Consists of a .1 mfd. condenser and a 400 ohm resistor connected in series with each other and in series with the external oscillator.

Resonance Indicator:

Use as a resonance indicator an output meter connected across the primary of the speaker input transformer, or by means of an adapter between the plate and screen terminals of the type 42 output tube. Maximum deflection of the meter indicates resonance. Use only enough signal to get a readily readable output. A low range output meter or the low scale of a multi-range volt meter should be used.

Alignment

No aligning adjustments should be attempted without first thoroughly checking over all other possible causes of trouble, such as poor installations, open or grounded antenna systems, low line voltages, defective tubes, condensers and resistors. In order to properly align this chassis, an oscillator (generator) is absolutely necessary. No aligning adjustments should be attempted with the chassis in the cabinet. To remove the knobs, pull them off and to take the chassis out of the cabinet, remove the three bolts by which it is fastened and the speaker plug which you will find on the front flange of the chassis panel.

Aligning I. F. Transformers

1. With volume control full on, the extreme right of its rotation, and with wave changing switch in the broadcast position, extreme left of its rotation, and with variable condenser at its minimum capacity position, plates entirely out of mesh, adjust the I.F. transformers (two adjustments at the top of parts number 108-38 and 108-40—see top view).

   (a) Connect external oscillator which has been adjusted to 465 kilocycles in series with I.F. dummy antenna, to the control grid cap of the type 6D6 tube and chassis ground. Adjust output I.F. transformer, part number 108-40, to resonance.

   (b) Move generator output clip from grid of 6D6 to grid cap of 6F7 tube and align input I.F. transformer, part number 108-38.

   (c) With generator connected to grid of type 6F7 tube, readjust output I.F. transformer, part number 108-40, to resonance.

Broadcast Band Alignment—
(530 - 1720 Kilocycles)

1. With wave changing switch in the broadcast position, extreme left of its rotation, and with gang condenser in its minimum capacity position, plates entirely out of mesh, connect an external oscillator in series with broadcast dummy antenna to tan antenna and black ground leads and make the following adjustments:

   (a) With external oscillator set at 1720 kilocycles, adjust oscillator trimmer to resonance, for location of this adjustment, number 6, see diagram.

   (b) Re-set external oscillator to 1400 kilocycles, rotate condenser, pick up oscillator signal and adjust antenna trimmer to resonance. For location of this adjustment, number 3, see diagram.

   (c) Re-set external oscillator to 600 kilocycles and adjust series pad to resonance, rotate condenser and move dial pointer to 600 kilocycles by gently rocking condenser to and fro. Pick up oscillator signal while adjusting series pad to resonance, maximum deflection on an output meter. This adjustment is accessible from the top of the chassis and is located between variable condenser and power transformer, see top view—part number 124-16.

   (d) Check for tracking and sensitivity at 1000 kilocycles.

NOTE (Series "B" and "C" Only)

25 Cycle Chassis differ only from 60 cycle chassis in that part number 104-18 transformer is used in place of 50/60 cycle transformer, part number 104-14.

Short Wave Band Alignment—
(7.6 - 19.0 Megacycles)

1. This band is aligned after the I.F. adjustments have been completed. Set wave changing switch to short wave position, extreme right of its rotation, set dial pointer to 18 megacycles.

   (a) With external oscillator adjusted to 18 megacycles and connected in series with short wave dummy antenna to tan antenna and black ground leads, adjust the oscillator short wave trimmer until generator signal is picked up. For location of this adjustment, number 4, see diagram.

   (b) Adjust short wave antenna trimmer to resonance. For location of this adjustment, number 1, see diagram.

   (c) Re-set external oscillator to 9 megacycles, rotate condenser, move dial pointer to 9 megacycles and check for tracking and sensitivity. Do not bend plates. Note: It is extremely necessary in making all of the above adjustments that the fundamental signal of the oscillator be tuned in and not the image frequency, which will fall below the fundamental.

Intermediate Band Alignment—
(2.35 - 7.7 Megacycles)

1. With wave changing switch in center position, and with dial pointer set to 7 megacycles, make the following adjustments:

   (a) With external oscillator set at 7 megacycles and connected in series with short wave dummy antenna, as for short wave adjustments, adjust trimmer of oscillator coil, part number 110-22 until 7 megacycle signal is picked up. For location of this adjustment, number 5, see diagram.

   (b) Adjust antenna trimmer to resonance, adjustment number 2, see diagram.

   (c) Re-set external oscillator to 2.5 megacycles (2500 kilocycles), rotate variable condenser, move pointer, pick up oscillator signal and check for tracking and sensitivity. Note: It is extremely necessary in making all of the above adjustments that the fundamental signal of the oscillator be tuned in and not the image frequency, which will fall below the fundamental.

Service Notes

To check for open by-pass condensers, shunt each condenser with another of similar capacity and of the same voltage rating, which is known to be good, until the defective unit is located. Open by-pass condensers frequently cause oscillation and distorted tone. Defective and aborted electrolytic filter condensers cause excessive hum, motor-boating, low volume and a reduction in all D.C. voltages. Open or shorted electrolytic and by-pass condensers (across bias resistor of type 42 tube) will cause low volume and distorted tone.

Should the planetary vernier dial drive mechanism fail to function properly, it will probably be found to be due to a cracked or broken compression spring. The drive may be disassembled to replace the compression spring (part number 112-31) by removing the two screws which fasten it to the dial bracket. Before re-assembling all parts should be carefully cleaned and a small amount of vaseline applied to the ball bearings. All other dial parts are hardened and should cause no trouble.

OPERATION

CONTROLS.—The three control knobs on the front of the cabinet, in sequence from left to right are (see illustration):

KNOB 1.—*Volume Control and "On-Off" Switch Are Combined.* When turning on, a click will be heard and the dial will light. Wait approximately 45 seconds for the tubes to heat up. Turn knob all the way to the left to turn set off.

KNOB 2.—*Tuning.* The upper end of the pointer covers the standard broadcast band scale, which is marked in kilocycles, the lower end of the pointer covers the intermediate and short wave bands. The lower scale is the short wave band, marked in megacycles, the short heavy lines on this scale are marked in meters. It is at these points that many foreign broadcasters may be heard. The inner scale, marked in megacycles, includes the 49 meter broadcasting channel, which is shown by the short heavy line, it also includes amateurs and police calls.

KNOB 3.—*Wave Changing Switch.* The knob is marked with three dots and the cabinet with a pin. When the right hand dot is in line with the pin, the switch is set in the broadcast band position, when center dot is opposite pin, the intermediate band is in position and when the left dot is opposite pin, the short wave band is connected. Switch turned all the way left—broadcast position, center intermediate, all the way right—short wave.

GAMBLE-SKOGMO, INC.

MODEL 586-A
Schematic, Voltage
Socket, Trimmers

MODEL 586—SERIES A

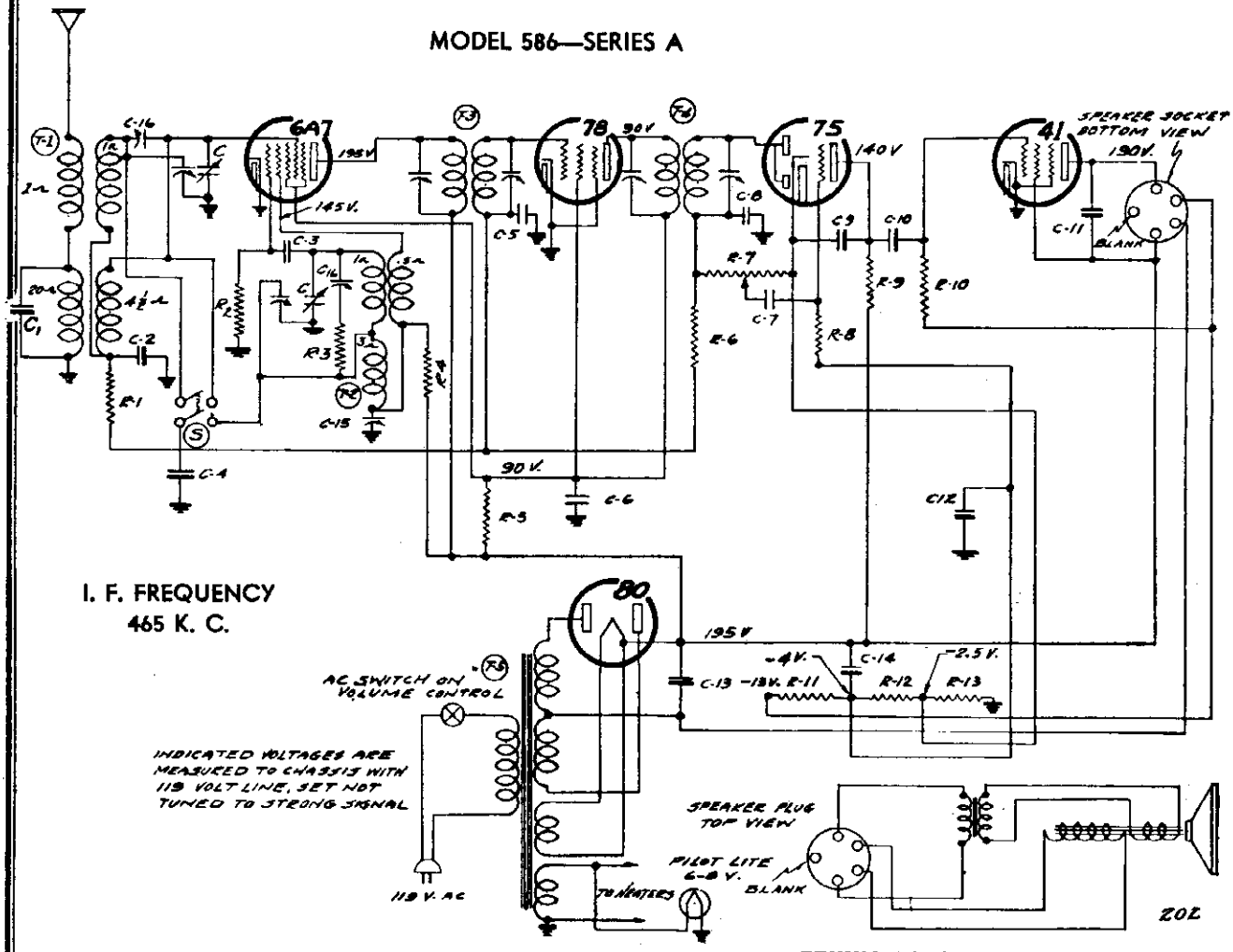

I. F. FREQUENCY
465 K. C.

TUNING RANGE—
Standard Broadcast Band
535-1720 Kilocycles.
Short Wave Band
2280-6600 Kilocycles

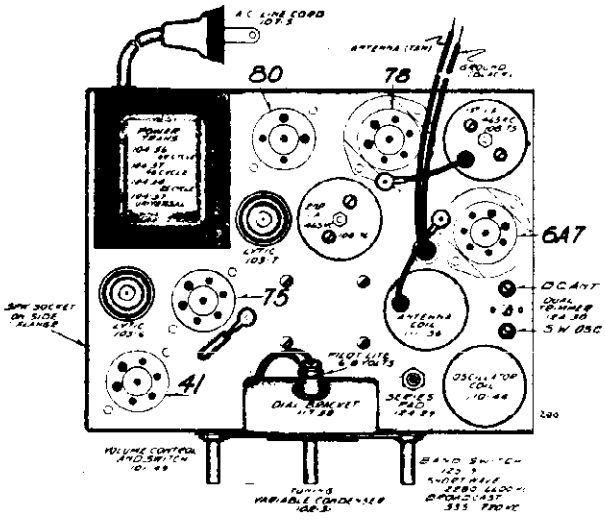

FIG. 1—TOP VIEW

TUBES:

The tube complement of this chassis consists of the following tubes.

The type and function of each tube is as follows:

1—Type 6A7 Pentagrid Mixer, First Detector-oscillator
1—Type 78 Remote Cut-Off Pentode, I. F. Amplifier (465 K.C.)
1—Type 75 Duplex Diode Triode Second Detector, A.V.C. and First Audio.
1—Type 41 Pentode Output Amplifier.
1—Type 80 High Vacuum Rectifier.

Transformers are available and chassis are sometimes equipped with universal transformers for operation on 40 and 60 cycles and with primary taps for 108, 125, 150, 220 and 250 volts (see parts list) and also sometimes equipped with 25 cycle transformers with 105-115 volt or 220 volt primaries, not universals.

©John F. Rider, Publisher

MODEL 586 - Series A

5-TUBE

2-Band A. C. Superheterodyne Receiver

PRICES ARE SUBJECT TO CHANGE WITHOUT NOTICE

REPAIR PARTS (Serial No. 6E248475 and up)

Part No.	Schematic Reference	Description	No. Used in Set	List Price Ea.
		CONDENSERS		
100-6	C-12; C-6	.25 x200 Volt Tubular—Without Bracket	2	$0.35
100-8	C-5	.05 x200 Volt Tubular	1	.25
100-11	C-10; C-7	.01 x400 Volt Tubular	2	.25
100-19	C-11	.006x600 Volt Tubular	1	.25
100-26	C-2	.02 x400 Volt	2	.25
103-6	C-13	8 Mfd. x 350 Volt Electrolytic	1	.75
103-7	C-14	8 Mfd. x 300 Volt Electrolytic	1	.75
129-5	C-9	.0001 Mica—Type O—20%	1	.25
129-12	C-8	.00025 Mica—Type O—20%	1	.25
129-61	C-4	.0017 Mica—Type W—2½%	1	.25
129-62	C-3	.00025 Mica—Type O—10%	1	.25
129-65	C-1	.0004 Mica—Type W—10%	1	.25
		RESISTORS		
130-26	R-11; R-12; R-13	220 Ohm (R-11), 33 Ohm (R-12), 52 Ohm (R-13), Metal Clad Resistor	1	.35
130-12	R-2	50M Ohm-1/3 Watt-20%-20 V.-Carbon	1	.20
130-20	R-9	100M Ohm-1/3 Watt-20%-50 V.-Carbon	1	.20
130-22	R-4	5M Ohm-1/3 Watt-20%-10 V.-Carbon	1	.20
130-27	R-5	10M Ohm-1 Watt-20%-100 V.-Carbon	1	.20
130-100	R-10	150M Ohm-1/3 Watt-20%-50 V.-Carbon	1	.20
130-110	R-6	1 Meg Ohm-1/10 Wt.-10%-100 V.-Carbon	1	.20
130-111	R-1	100M Ohm-1/10 Wt.-20%-50 V.-Carbon	1	.20
130-112	R-3	100 Ohm-1/10 Wt.-20%-10 V.-Carbon	1	.20
130-113	R-8	2 Meg Ohm-1/10 Wt.-20%-100 V.-Carbon	1	.20
		COILS		
108-75	T-3	465 K.C. Input I.F. Coil Assembly Complete with Can	1	1.25
108-76	T-4	465 K.C. Output I.F. Coil Assembly Complete with Can	1	1.25
110-44	T2	Oscillator Coil Assembly Complete with Can	1	1.25
111-56	T-1	Antenna Coil Assembly Complete with Can	1	1.50
		SOCKETS		
121-0		Six Prong Socket—Marked "78"	1	.10
121-6		Six Prong Socket—Marked "75"	1	.10
121-6		Six Prong Socket—Marked "41"	1	.10
121-7		Seven Prong Socket—Marked "6A7"	1	.10
121-8		Five Prong Socket—Marked "SPKR"	1	.10
121-9		Four Prong Socket—Marked "89"	1	.10
		SPEAKER		
114-16		Five Inch Dynamic Speaker	1	4.50
		TRANSFORMERS		
104-56	T-5	60 Cycle—110 Volt Power Transformer	1	2.75
104-57		60 Cycle—110 Volt Power Transformer		3.50
104-58		25 Cycle—110 Volt Power Transformer		3.75
104-59		40 Cycle Primary—Universal Power Transformer		4.00
		MISCELLANEOUS		
101-49	R-7	Volume Control & A.C. Switch (1 Meg Ohm)	1	1.00
102-31	C	Two Gang Variable Condenser	1	2.25
107-5		Line Cord & Plug	1	.50
112-15		Dial Crystal Only—Less Escutcheon	1	.12
112-131		Bakelite Escutcheon Complete with Crystal	1	.35
112-150		Pilot Light Assembly	1	.10
112-170		Dial Scale	1	.20
112-180		Dial Pointer Complete with Screw	1	.05
115-22		Tube Shield	2	.15
116-13		6-8 Volt, T-5½ Pilot Light Bulb	1	.10
117-58		Dial Housing	1	.20
117-59		Pointer Stud	1	.03
117-60		Pointer Bushing Assembly	1	.15
117-61		Drive Pulley	1	.10
120-7		Belt Tension Spring	1	.03
124-20	C-15	Type TC5 Series Pad	1	.35
124-30	C-16	Dual Ceramic Padder	1	.30
125-10	S	Band Switch	1	.40
131-2		Bakelite Knob	3	.10
131-43		Cinch Button for Fastening Dial Scale	5	.03
131-49		Drive Belt	1	.03
134-9		Compression Spring	1	.01

All adjustments should be made with a non-metallic screw driver.

RESONANCE INDICATOR:

Use as a resonance indicator an output meter connected across the primary of the speaker input transformer, or by means of an adapter between the plate and screen terminals of the type 41 output tube. Maximum deflection of the meter indicates resonance. Use only enough signal to get a readily readable output. A low range output meter or the low scale of a multi-range meter should be used.

ALIGNING I.F. TRANSFORMERS: (465 K.C.):

Part No. 108-76 Output I.F. Transformer
Part No. 108-75 Input I.F. Transformer

These I.F. transformers have two adjustments, both of which are accessible from the top of chassis (see top view).

1 With volume control full on (the extreme right of its rotation), the band changing switch in the broadcast position, (extreme left of its rotation), and with the variable condenser set to approximately 1400 kilocycles, make the following adjustments:

(a) Connect external oscillator set at 465 kilocycles, in series with "Dummy 1," to the control grid cap of the type 78 tube, and adjust the output I.F. transformer (No. 108-76) to resonance.

(b) With "Dummy 1" still connected, move oscillator output clip from grid of 78 to grid cap to 6A7 and adjust input I.F. transformer (No. 108-75) to resonance.

(c) With oscillator still connected to 6A7, readjust output I.F. transformer (108-76) if necessary.

DUMMY ANTENNAS:

The following dummy antennas are used in aligning and are referred to in the following alignment instructions as "Dummy 1," "Dummy 2," and "Dummy 3."

Dummy 1: (I.F.)—Consists of a .1 mfd. condenser connected in series with the external oscillator.

Dummy 2: (Broadcast)—Consists of a 200 mmfd. condenser and a 20 ohm resistor connected in series with each other and in series with the external oscillator.

Dummy 3: (Short Wave)—Consists of a .1 mfd. condenser and a 400 ohm resistor connected in series with each other and in series with the external oscillator.

SHORT WAVE BAND ANTENNA ADJUSTMENT:

1. With the band switch in the short wave position, and with external oscillator connected in series with "Dummy 3," to the tan antenna lead and black ground lead, make following adjustment:

(a) Set external oscillator to 6 megacycles and adjust the short-wave antenna trimmer to resonance. This adjustment is the trimmer mounted on the rear section of the variable gang condenser.

BROADCAST AND SHORT WAVE BAND ALIGNMENT

Broadcast Band: 535 to 1720 Kilocycles.
Short Wave Band:—2280 to 6600 Kilocycles.

Important:—These adjustments must be made in the following order:

SHORT WAVE OSCILLATOR ADJUSTMENT:

1. With band switch in the short wave band position, extreme right of its rotation, and with the gang condenser in its minimum capacity position, plates entirely out of mesh, and with the external oscillator connected in series with "Dummy 1" to grid cap of the 6A7 tube, make the following adjustment:

(a) Set external oscillator to 6.6 megacycles and adjust short wave oscillator trimmer to resonance. This adjustment is marked "S.W. Osc." (see top view of chassis, Fig. 1, for location of this adjustment).

NOTE: Make certain that the fundamental 6.6 megacycles signal has been tuned in and not the image frequency, noting that the image appears when the tuning knob is moved to approximately 5.7 megacycles.

BROADCAST BAND OSCILLATOR ADJUSTMENT:

1. With band switch in the broadcast position, extreme left of its rotation, and with the gang condenser in its minimum capacity position, plates entirely out of mesh, and with external oscillator connected in series with "Dummy 1" to grid cap of the 6A7 tube, make the following adjustment:

(a) Set external oscillator to 1720 K.C. and adjust broadcast oscillator trimmer to resonance. This adjustment is the trimmer mounted on the front section of the variable gang condenser.

BROADCAST BAND ANTENNA ADJUSTMENT:

1. With the band switch still in the broadcast position, move the external oscillator from the grid cap of the 6A7 tube to the tan antenna lead and black ground lead, in series with "Dummy 2" and make the following adjustments:

(a) Set external oscillator to 1550 K.C., rotate variable gang condenser and pick up signal. Adjust broadcast antenna trimmer to resonance. This adjustment is marked "B.C. Ant." (See top view of chassis, Fig. 1, for location of this adjustment.)

(b) Re-set external oscillator to 600 K.C. and adjust broadcast series pad to resonance by rotating condenser to approximately 600 K.C., rocking it slowly to and fro until, by adjusting series pad, maximum output is attained. This adjustment is located on the top of the chassis directly in front of the antenna coil. (See top view of chassis, Fig. 1).

(c) Repeat adjustments "a" and "b" until sensitivity is at its maximum.

©John F. Rider, Publisher

©John F. Rider, Publisher

Standard Broadcast Band 530-1720 Kilocycles
Short Wave Band 5.4-17 Megacycles (17.5 to 55 Meters)

105-115 Volts, 60 Cycle Alternating Current - 65 Watts

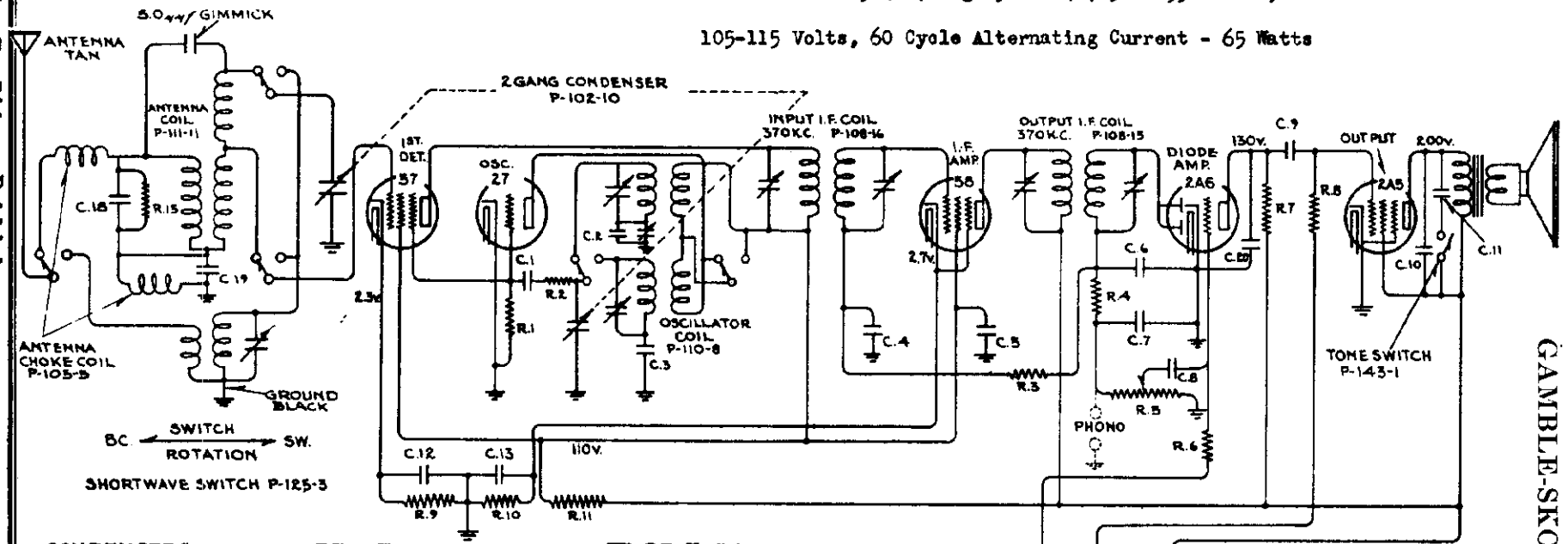

IF PEAK 370 KC.

CONDENSERS		RESISTORS		
Nº	VALUE	Nº	VALUE	
C.1:-	50 MICA	R.1:-	50M.	1/3W.
C.2:-	490 MICA	R.2:-	50	1/3W.
C.3:-	5M MICA	R.3:-	500M	1/3W.
C.4:-	.05 X 200V.	R.4:-	50M	1/3W.
C.5:-	.05 X 400V.	R.5:-	500M	VOLUME CONTROL P-101-11
C.6:-	100 MICA	R.6:-	500M	1/3W.
C.7:-	100 MICA	R.7:-	250M	1/3W.
C.8:-	.05 X 200V.	R.8:-	250M	1/3W.
C.9:-	.05 X 400V.	R.9:-	1000	
C.10:-	.003 X 400V.	R.10:-	275	
C.11:-	.02 X 400V.	R.11:-	13M	
C.12:-	.1 X 200V.	R.12:-	25M	1/3W
C.13:-	.1 X 200V.	R.13:-	250M	1/3W.
C.14:-	.25 X 200V.	R.14:-	750M	1/3W.
C.15:-	.25 X 200V	R.15:-	10M	1/3W.
C.16:-	18 MFD. 350V. P-103-3			
C.17:-	16 MFD 400V. P-103-4			
C.18:-	120 mmf.			
C.19:-	.01 mf.			
C.20:-	.0005 MICA.			

:-NOTE:-
CONDENSERS C.10, C.11 IN DUAL UNIT.
" C.14, C.15 " " "
" C.13, C.4 " " "
RESISTORS R 9, R.10, R.11 IN ONE UNIT P-106-13
NUMBERS PREFIXED BY LETTER "P" ARE PART NUMBERS.

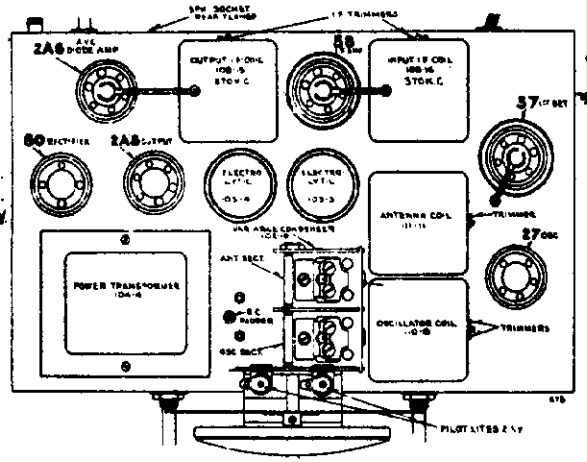

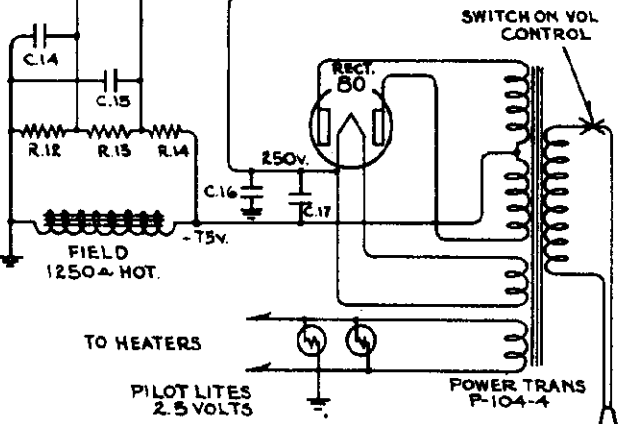

34265

VOLTAGES TAKEN FROM POINTS INDICATED TO CHASSIS GROUND. VOLUME CONTROL ON FULL
RESISTORS, R.3, 4, & 6, CONDENSERS C.6, 7, & 8 ARE IN OUTPUT I.F. CAN, P-108-15

GAMBLE-SKOGMO, INC.

MODEL 675 Schematic, Socket Trimmers, Voltage

MODEL 675
Alignment
Notes

GAMBLE-SKOGMO, INC.

SERVICE NOTES

Voltages taken from different points of the circuit are measured with a voltmeter having a resistance of 1000 ohms per volt and are made between the points indicated and the chassis pan. These voltages are indicated on the circuit diagram.

To check for open by-pass condensers, shunt each condenser with another condenser of the same capacity and voltage rating, which is known to be good, until the defective unit is located.

Excessive hum, stuttering, low volume and a reduction in all D.C. voltages is usually caused by a shorted electrolytic condenser, open by-pass condensers frequently cause oscillation and distorted tone.

ALIGNMENT:

No aligning adjustments should be made until the set has been thoroughly checked for all other possible causes of trouble, such as poor installations, low line voltages, defective tubes, condensers and resistors.

ALIGNING I.F. TRANSFORMERS:

1. With volume control full on, at the extreme right of its rotation, and with wave selector switch in the broadcast position, extreme left of its rotation, and with variable condenser at its minimum capacity position, extreme left of its rotation, plates entirely out of mesh, adjust the I.F. transformers (parts number 108-15 and 108-16) in the following manner:
   (a) Connect an external oscillator which has been adjusted to 370 kilocycles, in series with a .1 mfd. condenser to the control grid cap of the type 57 first detector tube (see diagram and chassis).
   (b) Adjust trimming condensers of both I.F. transformers (Parts number 108-15 and 108-16) to resonance. Use as a resonance indicator an output meter connected across the primary of the speaker input transformer or by means of an adapter between plate and screen terminals of type 2A5 output tube. Maximum deflection of the meter indicates resonance. Care should be taken to use only enough signal to give a readily readable output.
   Note: The two adjustments on each transformer are accessible through holes in the transformer cans from the back of the chassis.

BROADCAST BAND ALIGNMENT:

1. Shift frequency of external oscillator to 535 kilocycles and connect in series with a 200 mmfd. condenser to the tan antenna wire and the black ground wire.
   (a) Set the variable condenser in its maximum capacity position, extreme right of its rotation.
   (b) Adjust the broadcast oscillator series trimmer to resonance with oscillator. This trimmer is located between the gang condenser and the power transformer (see top view).
2. Shift frequency of external oscillator to 1712 kilocycles and set variable condenser in its minimum capacity position, extreme left of its rotation, plates entirely out of mesh.
   (a) Adjust the broadcast oscillator shunt trimmer to resonance. This adjustment is the top adjustment in the oscillator coil can, part number 110-8.

SHORT WAVE BAND ALIGNMENT:

1. Set the wave changing switch in the short wave position, extreme right of its rotation, and change external oscillator frequency to 15 megacycles.
   (a) Adjust variable condenser with selector knob so that pointer is opposite the 15 megacycle calibration on the dial.
   (b) Adjust the short wave oscillator shunt trimmer to resonance with the signal (use extreme care and make certain that you do not adjust to resonance with the image instead of the signal). This trimmer is the bottom trimmer (closest to the chassis) on the oscillator coil, part number 110-8, and is accessible from the side of the chassis.
   (c) Adjust the short wave antenna trimmer to resonance (single trimmer in antenna can, part number 111-11, accessible from the side of the chassis, between type 27 and 57 tubes).

NOTES:

Should the planetary vernier dial drive mechanism fail to function properly, it will probably be found to be due to a cracked or broken compression spring. This drive may be dis-assembled by removing the two screws which fasten it to the dial bracket. The part number of the compression spring is 112-31. All of the other dial parts are hardened and should cause no trouble.

©John F. Rider, Publisher

GAMBLE-SKOGMO, INC.

MODEL 670-A
Schematic, Voltage
Socket, Trimmers

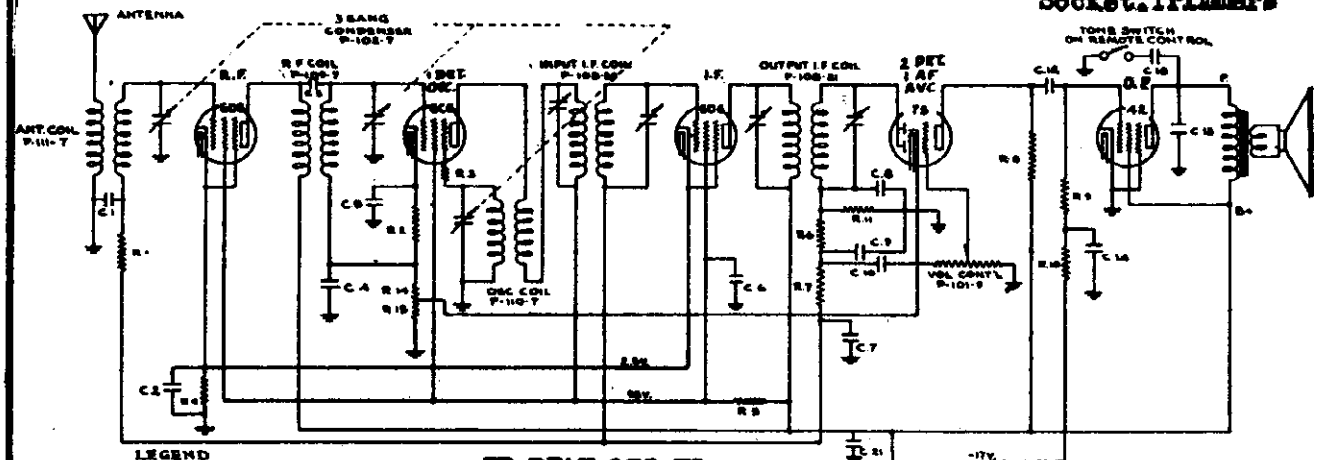

RESISTORS		CONDENSERS	
NO	VALUE	NO	VALUE
R 1 -	250M ½W	C 1 -	.05 X 200V.
R 2 -	450Ω	C 2 -	1 X 200V.
R 3 -	1500Ω	C 3 -	11.9 mmf GIMMICK
R 4 -	150Ω	C 4 -	.05 X 200V.
R 5 -	25M 1W.	C 5 -	.05 X 200V.
R 6 -	50M ½W	C 6 -	1 X 200V.
R 7 -	250M ½W.	C 7 -	1 X 200V.
R 8 -	250M ½W	C 8 -	.0005 MICA
R 9 -	200M ½W	C 9 -	.0005 MICA
R 10 -	300M ½W	C 10 -	.01 X 400V.
R 11 -	250M ½W.	C 11 -	.002 MICA.
R 12 -	100Ω	C 12 -	.01 X 400V.
R 13 -	100Ω	C 13 -	.003 X 600V.
R 14 -	5Ω	C 14 -	1 X 200V.
VAR. RESISTOR (Vol. Cont'l.)	.500M	C 15 -	.5 MFD. X 120V.
R 15 -	200Ω	C 16 -	8 MFD. X 350V.
		C 17 -	8 MFD. X 350V.
		C 18 -	.01 X 400V.
		C 19 -	.015 X 1400V.
		C 20 -	.5 MFD. X 120V.
		C 21 -	.01 X 400V.

IF PEAK 175 KC.

- NOTE -

NUMBERS PREFIXED BY LETTERS ARE PART NUMBERS.
VOLTAGES TAKEN FROM POINTS INDICATED TO CHASSIS GROUND. VOLUME CONTROL ON FULL.
THE PHASE GIMMICK MEANS A WIRE WOUND AROUND ANOTHER WIRE.
RESISTORS IN ONE UNIT, P-104-14, - R. 2, 4, 14, 15
CONDENSERS IN ONE UNIT, P-119-4 - C. 16, 17.
CONDENSERS C 2, C 4, C 5, C 6, C 7 ARE IN ONE UNIT P-148-5.
RESISTORS AND CONDENSERS IN OUTPUT I F CAN, P-108-2, - C. 8, 9, 10 AND R. 6, 7, 11.
CONDENSER, C 1, IN ANT. COIL CAN P-111-12.
CONDENSERS C 18, C 20 IN ONE UNIT P-148-4

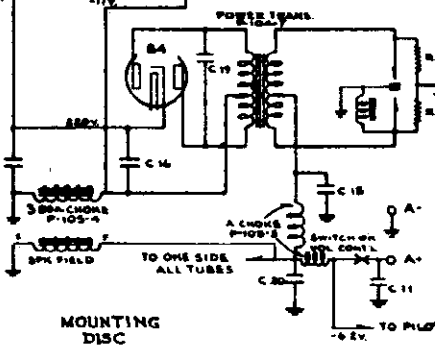

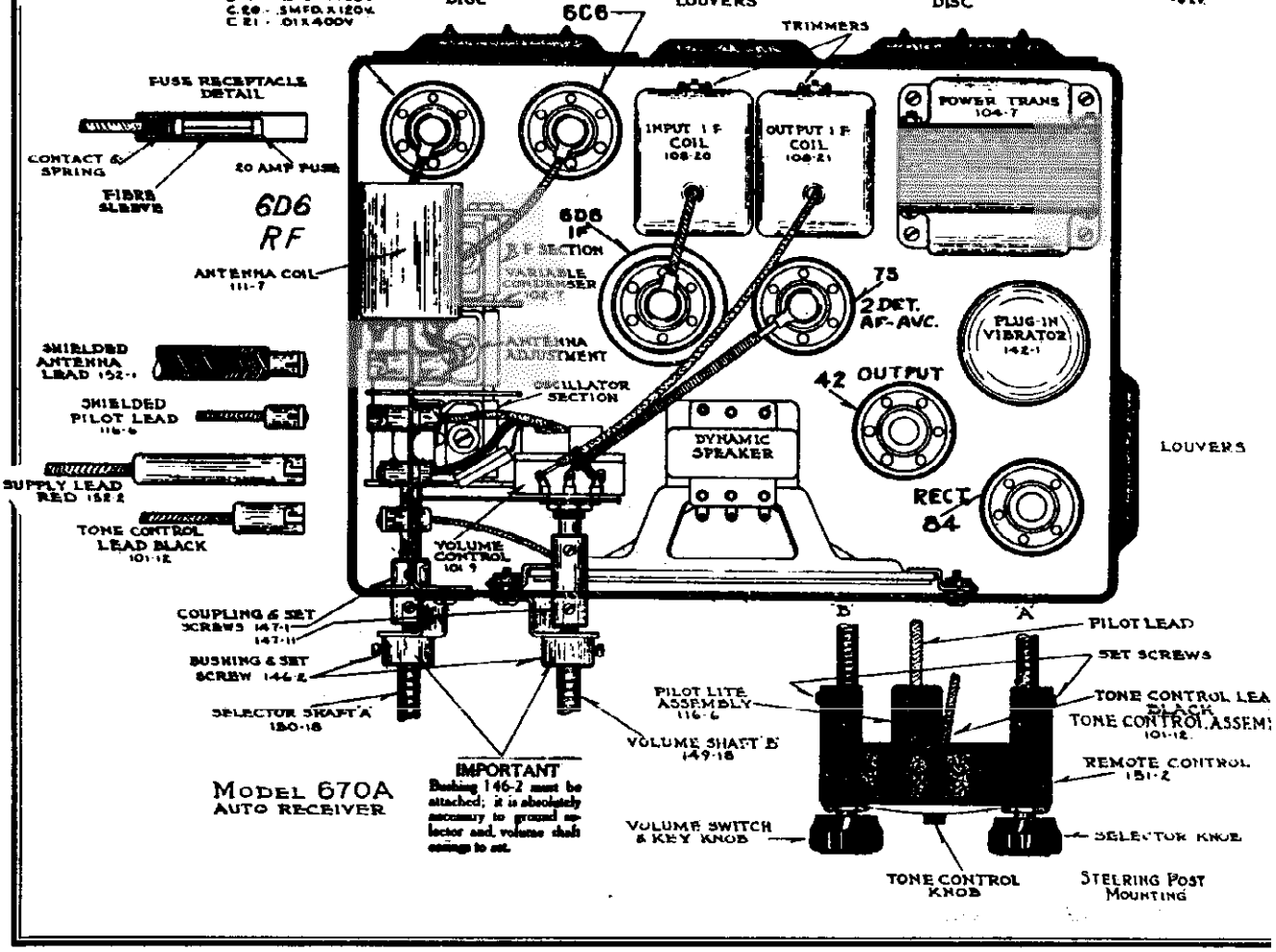

MODEL 670A
AUTO RECEIVER

IMPORTANT
Bushing 146-2 must be attached; it is absolutely necessary to ground selector and volume shaft casings to set.

©John F. Rider, Publisher

MODEL 670-A
Alignment
Installation Data

GAMBLE-SKOGMO, INC.

BALANCING SET TO ANTENNA:

When this set has been installed and is ready for operation it may be found necessary (depending on antenna) to balance set to this antenna. This is accomplished as follows:

With the receiver tuned to a very weak station, about 130 to 140 (1300 to 1400 kilocycles) on the dial, adjust the antenna trimmer with a screw driver until maximum volume is attained. To reach the antenna trimmer remove the plug button from the top of the case.

I. F. ALIGNMENT:

1. With variable condenser at its maximum capacity position and with volume control full on, connect in series with a .1 mfd. condenser, an oscillator set at 175 kilocycles to the grid cap of the 6C6 tube.

2. Adjust trimming condensers of both input and output I. F. transformers, parts number 108-20 and 108-21 (see top view of chassis) to resonance with an oscillator, as indicated on an output meter connected across the primary terminals of the speaker input transformer or between the plate and screen terminals of the type 42 output tube. The connection to the tube can be made by means of an adapter. Maximum deflection on the output meter indicates resonance.

Note: Each I. F. transformer has two adjustments, both of these adjustments on both transformers are accessible through holes located in the back of the case between the two mounting plates and directly under the louvres.

R. F. ALIGNMENT:

1. Attach oscillator connected in series with a 200 mmfd. condenser to the antenna lead and with the variable condenser at its minimum capacity position (extreme right of its rotation) and with an oscillator set at 1550 kilocycles, adjust condenser trimmer of oscillator section (Front shaft end) to resonance.

2. Re-set oscillator to 1400 kilocycles, rotate variable condenser to pick up signal, adjust antenna (center section) and R. F. (rear section) trimmers to resonance.

3. Check alignment at 1500-1000-800-600-530 kilocycles by setting oscillator to these frequencies and picking up signal by rotating condenser.

4. Bend slotted plates of antenna and R. F. sections only if necessary. UNDER NO CIRCUMSTANCES BEND PLATES OF OSCILLATOR SECTION.

NOTES:

Voltages from chassis to different points are indicated on schematic circuit diagram, and should be measured with a voltmeter having a resistance of 1000 ohms per volt.

Failure to operate, noisy or weak reception, may be due to defective tubes or poor contact between cap on top of tube and grid clip.

Tubes may be checked by replacing with another tube which is known to be good.

If fuse blows out frequently, and insulating sleeve has been properly placed over fuse, the trouble probably is in the vibrator and vibrator should be replaced.

NEVER ATTEMPT TO ADJUST VIBRATOR POINTS.

Case rattles may be due to one or more of the following:

Loose screws in top or bottom covers. Loose elements in tubes. Loose tube shield. Loose R. F. coil shield. Loose grill cloth.

RECEIVER INSTALLATION:

Determine most satisfactory or desirable mounting position. In most cases it will be found that the receiver can be mounted on the car bulk head, above and to the right of the steering post.

Use the cardboard template which is the same size as set and mark location for two mounting bolts, if mounted on the long side and one bolt if on the short side.

Then drill two (2) one-half inch (½") holes, making certain that the paint around the hole on the engine side of fire wall or bulk head is scraped clean to insure a good ground connection between receiver and the frame of the car. Assemble brackets number 146-2 to case with self-tapping screws.

Insert bolts through dash, assemble plain, lockwashers and nuts on engine side, then hang receiver over bolt heads and tighten nuts securely.

Mount the remote control unit on steering column by means of mounting bracket or attach to instrument panel or under dash (see illustration).

Two flexible shafts are furnished, one with a slotted fitting on one end, which is the volume control shaft (number 149-18), the other is the selector shaft, with key fitting at one end (number 150-18).

Make certain that the outer casings of flexible shafts go into remote control bushings for approximately five-sixteenths of an inch and tighten set screws to secure cables. If cables are pushed too far into remote control head, shafts will not turn freely. Always try to install drive shafts in as straight a line as possible from remote control to set. AVOID SHARP BENDS IN CABLES.

IMPORTANT—READ CAREFULLY:

We are prepared to exchange, without charge, our standard number 149-18 and 150-18, eighteen inch cables for twenty-four inch cables, number 149-24 and 150-24. You will find that 99% of the installations can be made with the standard eighteen inch cables, and bear in mind that the shorter the cable, the smoother the drive.

DIAL ADJUSTMENT:

Mount control head to steering column by means of bracket and strap or under dash by means of bracket or to instrument panel (see illustrations). Attach cables as above. Tune set to some station of a known frequency (between 800 and 1200 K.C.), hold selector knob, then with a screw driver adjust the slotted screw on back of the control head, and in that way adjust the dial pointer to the correct frequency setting.

CONNECTIONS TO BATTERY:

The battery cable, number 152-2, (red wire with fuse receptacle at one end and terminal lug at other end) must be connected to battery terminal of ammeter. At the same time connect ammeter capacitor, number 148-3, to battery terminal of ammeter, other end of condenser to any convenient grounded screw on back of instrument panel. Make certain that insulating sleeve is slipped over fuse when fuse is placed in receptacle, before inserting in receiver (see illustration). All bypass leads should be as short as possible.

When connected properly, the discharge due to current drawn by the receiver should not indicate on the ammeter. This is important, since if improperly connected, as shown by the deflection of ammeter, additional motor interference may be encountered.

PILOT LIGHT:

Pilot light assembly, part number 116-6, a shielded cable, plugs into the set and to the rear of the remote control unit (see illustrations).

TONE CONTROL:

The tone control assembly, part number 101-12, attaches to the back of the remote control head by means of a special screw and plugs into the set (see illustrations).

ANTENNA CONNECTION:

The antenna is connected to the receiver by means of the antenna cable, number 152-1. The antenna wire is the single black wire projecting from the end of the cable. Splice this wire to the roof antenna lead and ground the pig-tail shielding as close to the corner post of the car as possible.

OPERATION:

Place key (knob) in lock of left hand control of the remote control unit. After waiting approximately 45 seconds for tubes to heat up, rotate station selector, right hand knob, until a desirable program is heard. De-tuning will very seriously affect the tone quality of this receiver. Tone control knob located between two black knobs (see illustrations) is a BASS and TREBLE switch, it is not a variable tone control. Turning it to the right makes the BASS connection, turning it to the left makes the TREBLE connection. You will note that the BASS position assists materially in reducing interference from static, street car lines and other high pitched disturbances.

MOTOR NOISE SUPPRESSION:

The ignition system of every automobile generates high frequency electrical interference. This high frequency interference arising from the ignition coil, the distributor and the spark plugs must be properly suppressed in order to obtain satisfactory reception. Each car will present more or less an individual problem but there is a definite procedure to follow which holds true in every case.

This first essential procedure is to disconnect the high tension leads to the spark plugs and attach the spark plug suppressors (168-1) (for V 8 Fords 168-4) the special distributor type suppressor (168-2) which is inserted in the center contact of the distributor as indicated in the illustration of a typical installation. (NOTE V 8 FORD USES NO DISTRIBUTOR SUPPRESSOR.) For cap type distributor, exchange the standard plug type distributor suppressor (168-2) for a special cable type suppressor (168-3) from your dealer. In some few cases, such as Buicks it is sometimes necessary to use cable type (168-3) suppressors. This type of suppressor is inserted in the leads running from the distributor to the spark plugs and which are concealed underneath the metal plate which covers the spark plugs.

After the spark and distributor suppressors have been properly fastened the next in importance is the generator condenser (148-1), this filters a high pitched whining noise which would otherwise be heard as the motor is accelerated.

It is sometimes necessary in cars where the ignition coil is located under the dash, to use an additional capacitor (148-1) obtainable from your dealer. It must be installed between the battery side of the ignition coil and the frame of the car. Next connect capacitor (148-3) from the battery side of ammeter to frame of car. This is necessary in practically every installation and a good connection to the frame of the car is of utmost importance.

©John F. Rider, Publisher

GAMBLE-SKOGMO, INC.

MODEL 660
Schematic, Voltag
Socket, Trimmers
Parts List

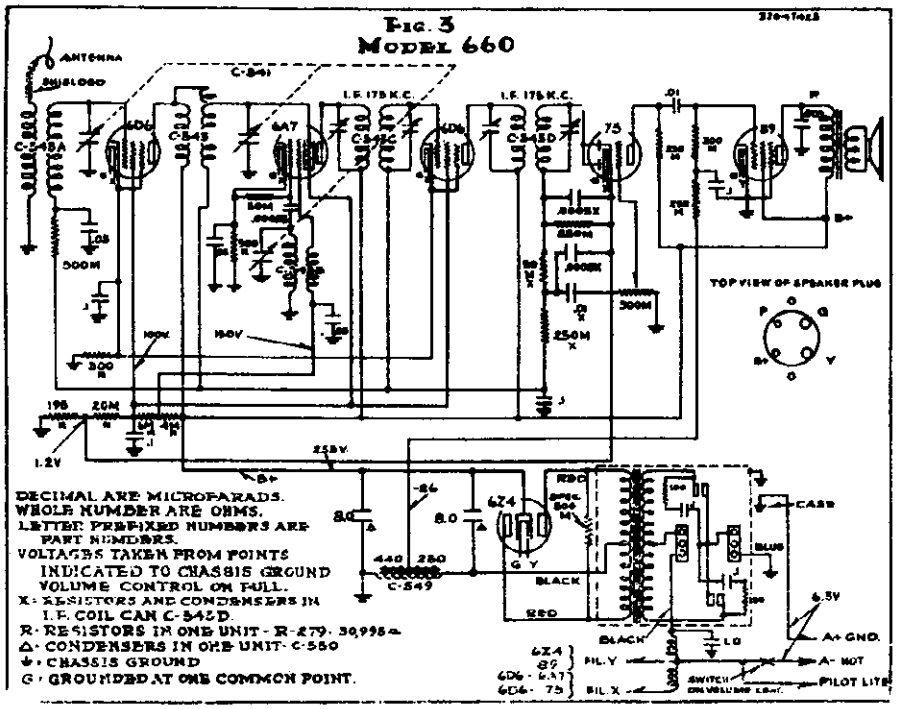

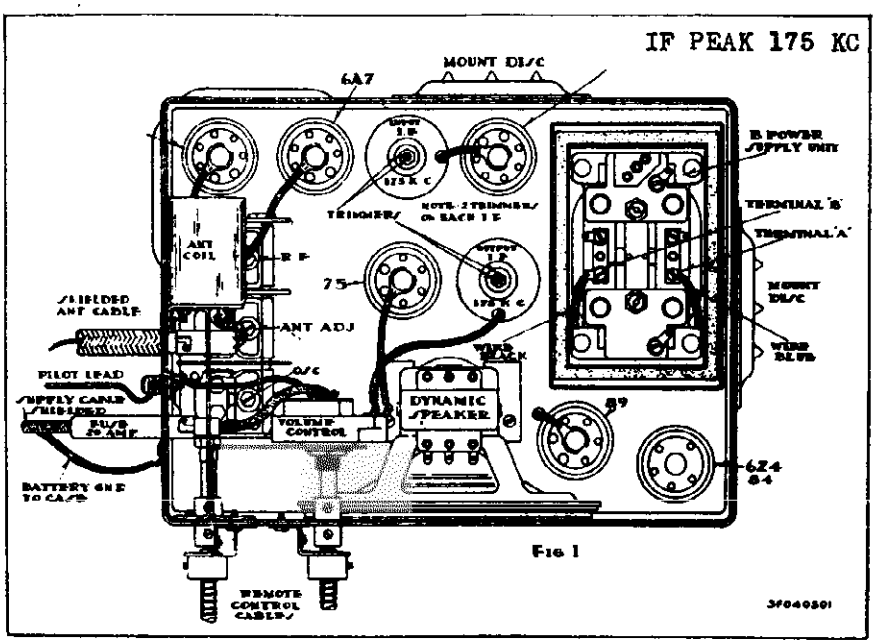

SCHEMATIC CIRCUIT DIAGRAM

MODEL 660 AUTORADIO

See instructions for aerial notes etc.

PARTS LIST

Part No.	Description	List Price Each
A 660	Battery Cable—Plug Type.	1.75
B 104	Cable Shaft Brackets.....	.35
B 660	Antenna Cable—Plug Type	.80
C 106	Shaft Couplings	.35
C 117	"A" Choke—Small	.25
C 118	"A" Choke—Large	.35
C 144	Dual .1-200 Volt Condenser	.35
C 152	.00025 Mica Condenser...	.20
C 155	.0005 Mica Condenser....	.20
C 522	.01-400 Volt Condensers..	.25
C 531A	Dual .05 Condenser.....	.30
C 535	Dual .1—200 Volt Condenser	.35
C 541B	3 Gang Condenser	3.75
C 543	R.F. Coil	.80
C 543A	Antenna Coil	.80
C 543B	Oscillator Coil	.70
C 543C	Input I.F. Transformer...	1.25
C 543D	Output I.F. Transformer with Parts	2.50
C 547	.1-200 Volt Condenser....	.30
C 549	690 Ohm Choke	1.40
C 550	8-8 Mfd. Electrolytic Condenser	2.25
C 551	1 Mfd.—120 Volt Condenser	.35
C 553	.05-200 Volt Condenser...	.25
C 554	.5 Mfd. Generator Condenser	.50
R 232A	Special 500M Ohm Resistor Identified with 2 Yellow Dots	.35
R 279	30,995 Ohm Resistor.....	.60
R 281	100 Ohm Resistor.....	.20
S 338	18" Volume Control Shaft.	1.25
S 339	18" Selector Control Shaft	1.25
S 338S	Special 24" Volume Control Shaft	1.50
S 339S	Special 24" Selector Control Shaft	1.50
V 660	Complete "B" Unit—OAK	8.00
V 603	Volume Control	1.50
660	Remote Control Head Complete Less Shafts.....	5.00
	20 Ampere Fuses.....	.10
	Mounting Bolts	.10
	All carbon resisters.....	.20
	All sockets	.20
	Dynamic speakers	5.00

PRICES ARE SUBJECT TO CHANGE

©John F. Rider, Publisher

MODEL 680
Schematic, Voltage

GAMBLE-SKOGMO, INC.
MODEL 680

Socket, Trimmers
Alignment, Mounting

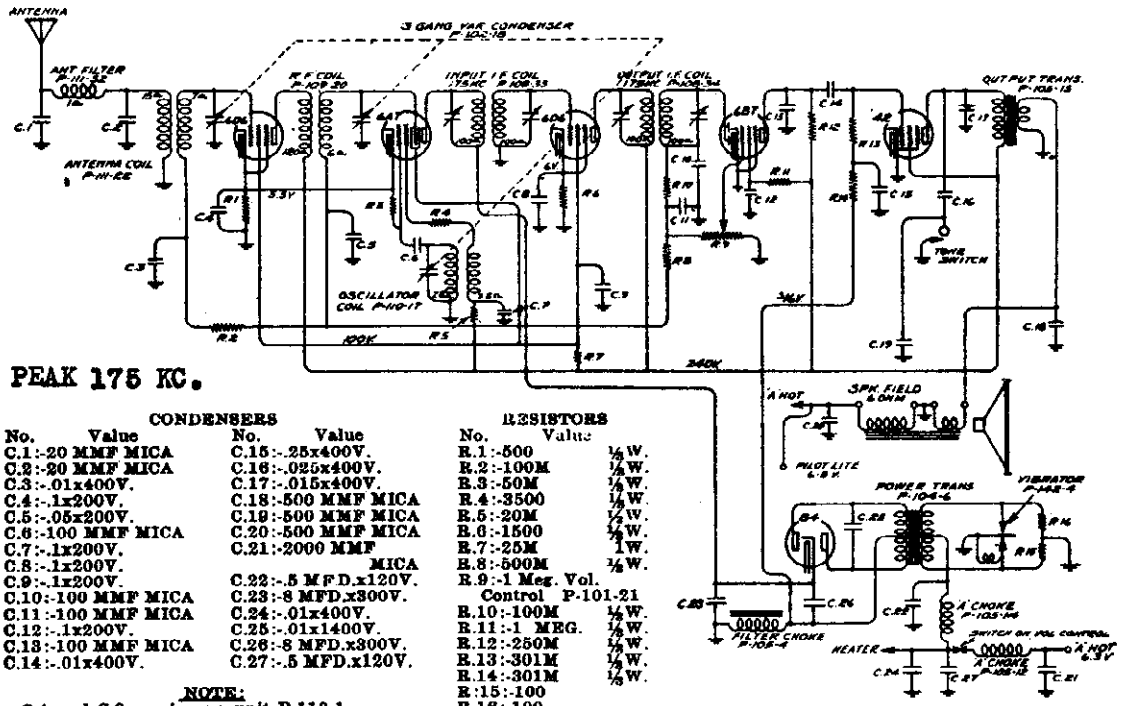

IF PEAK 175 KC.

CONDENSERS

No.	Value
C.1	:-20 MMF MICA
C.2	:-20 MMF MICA
C.3	:-.01x400V.
C.4	:-.1x200V.
C.5	:-.05x200V.
C.6	:-100 MMF MICA
C.7	:-.1x200V.
C.8	:-.1x200V.
C.9	:-.1x200V.
C.10	:-100 MMF MICA
C.11	:-100 MMF MICA
C.12	:-.1x200V.
C.13	:-100 MMF MICA
C.14	:-.01x400V.
C.15	:-.25x400V.
C.16	:-.025x400V.
C.17	:-.015x400V.
C.18	:-500 MMF MICA
C.19	:-500 MMF MICA
C.20	:-500 MMF MICA
C.21	:-2000 MMF MICA
C.22	:-.5 MFD.x120V.
C.23	:-8 MFD.x300V.
C.24	:-.01x400V.
C.25	:-.01x1400V.
C.26	:-8 MFD.x300V.
C.27	:-.5 MFD.x120V.

RESISTORS

No.	Value
R.1	:-500 ½W.
R.2	:-100M ½W.
R.3	:-50M ½W.
R.4	:-3500 ½W.
R.5	:-20M ½W.
R.6	:-1500 ½W.
R.7	:-25M 1W.
R.8	:-500M ½W.
R.9	:-1 Meg. Vol. Control P-101-21
R.10	:-100M ½W.
R.11	:-1 MEG. ½W.
R.12	:-250M ½W.
R.13	:-301M ½W.
R.14	:-301M ½W.
R.15	:-100
R.16	:-100

NOTE:
C.4 and C.9 are in one unit P-118-1
C.7 and C.8 are in one unit P-118-1
C.26 and C.23 are in one unit P-119-17
R.16 and R.15 are in one unit P-106-6
Numbers prefixed by letter "P" are part numbers.
Voltages taken from points indicated to chassis ground. Vol. control on full, no signal.

Serial No. 60001 and up.

DUMMY ANTENNAS:
The dummy antennas referred to in the following instructions are:
"I.F. Dummy" —A .1 mfd. condenser connected in series with the test oscillator output lead.
"Broadcast Dummy"—A 200 mmfd. condenser connected in series with the output lead of the test oscillator.

RESONANCE INDICATOR:
Use as a resonance indicator an output meter connected across the primary of the speaker input transformer, or by means of an adapter between the plate and the screen of the type 42 output tube. Maximum deflection of the meter indicates resonance. Use only enough signal to get a readily readable output. A low range output meter or the low scale of a multi-range meter should be used.

I.F. ALIGNMENT:
1. With variable condenser in its minimum capacity position (plates entirely out of mesh) and with volume control full on, connect test oscillator set at 175 K.C., in series with I.F. dummy antenna, to the grid cap of the type 6A7 tube.
2. Adjust trimmer condensers of both input (108-33) and output (108-34) I.F. transformers to resonance with oscillator. See top view for location of these transformers. There are two adjustments on each and they are accessible from the top of the transformer shield and should be adjusted with an insulated screw driver.

BROADCAST ALIGNMENT:
1. With variable condenser in its minimum capacity position, connect test oscillator set at 1550 K.C. and in series with broadcast dummy, to the antenna lead of receiver.
2. Adjust oscillator trimmer of variable condenser to resonance (this adjustment is on the end section of the three gang condenser—see top view).
3. Shift test oscillator to 1400 K.C. and pick up signal by rotating condenser and adjust R.F. (center) and antenna (front) trimmers to resonance, see top view.

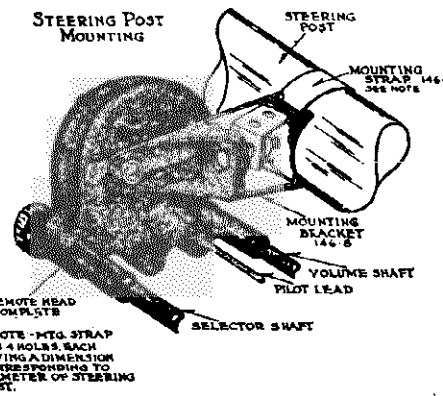

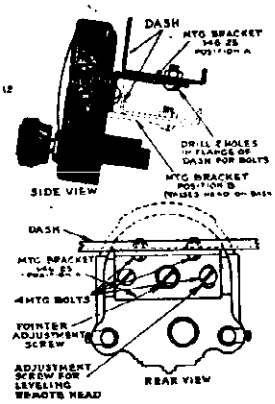

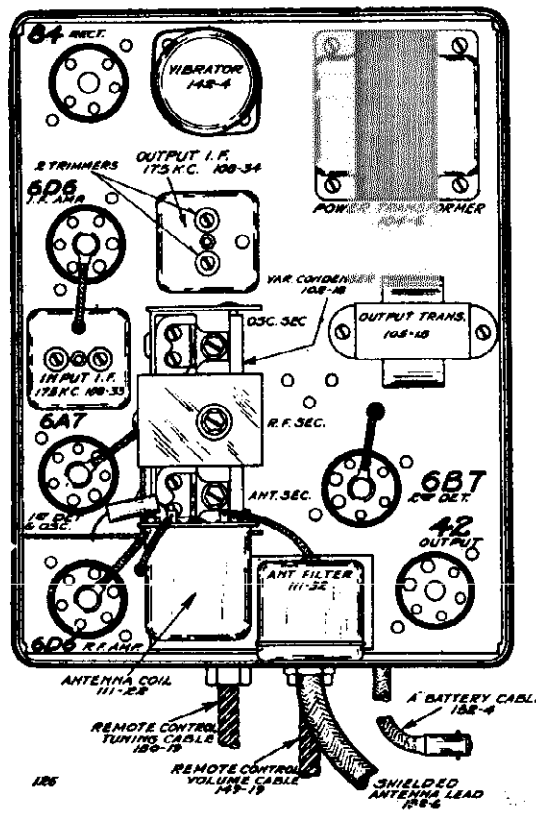

©John F. Rider, Publisher

GAMBLE-SKOGMO, INC.

MODEL 686, A & B
Schematic, Voltage
Socket, Trimmers
Parts List

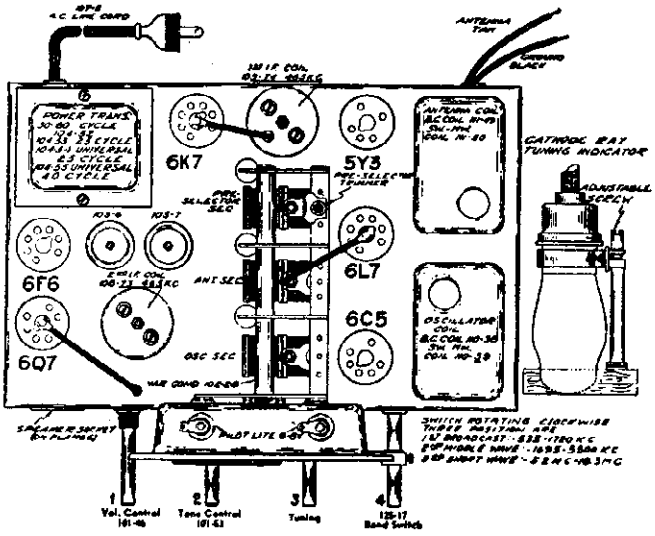

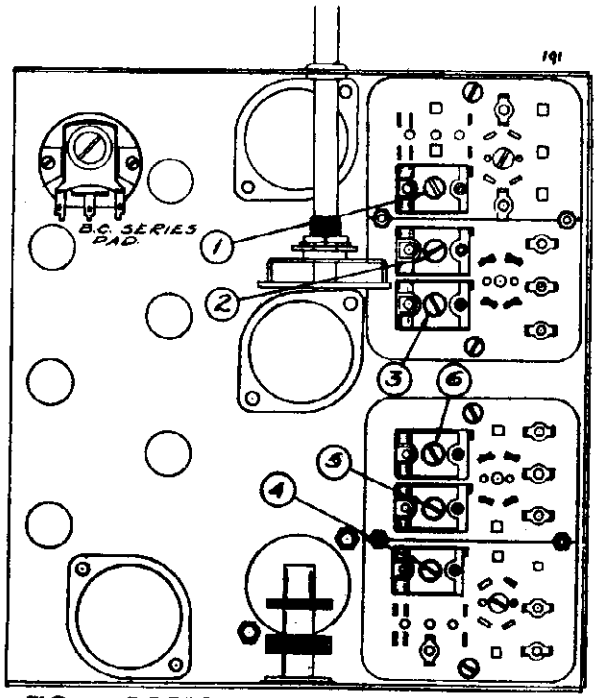

FIG. 2—BOTTOM VIEW (Showing Trimmers)

POWER TRANSFORMER
50-60 CYCLE P-104-52
25 CYCLE P-104-53
UNIVERSAL 25 CYCLE P-104-54
UNIVERSAL 40 CYCLE P-104-55

MODEL 686 SERIES A, B

I. F. FREQUENCY 465 K. C.

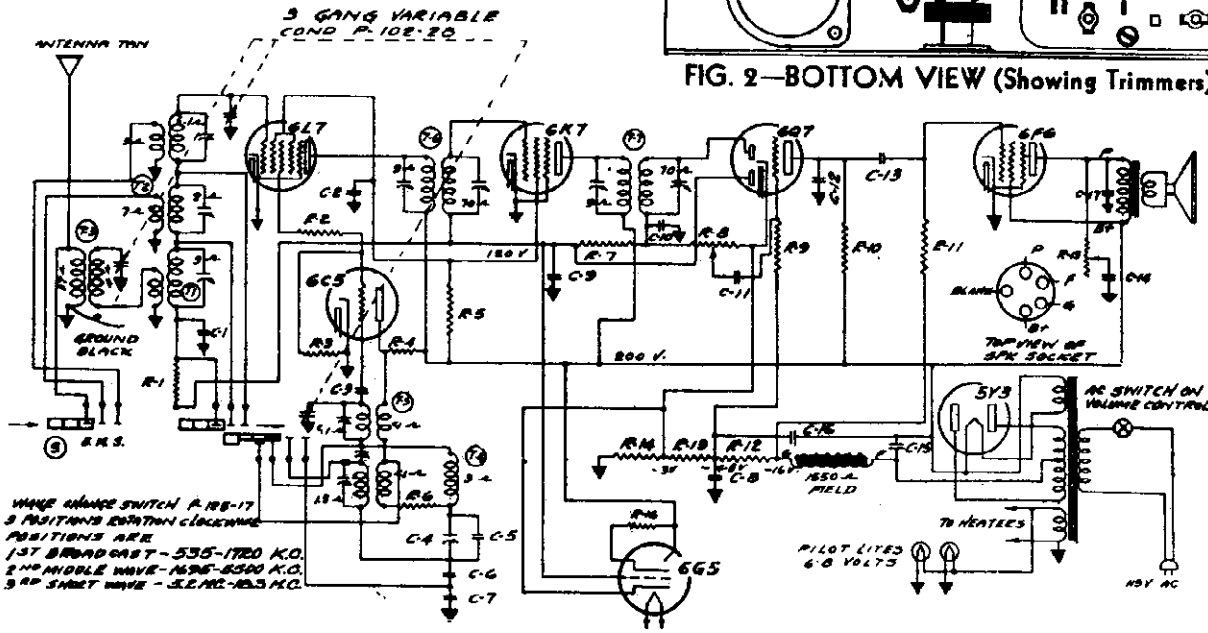

No.	Part No.	Description
		RESISTORS
R1	130-20	100M Ohm—⅛ Watt—20%—50 Volt—Carbon
R2	130-105	150 Ohm—⅛ Watt—20%—10 Volt—Carbon
R3	130-12	50M Ohm—⅛ Watt—20%—10 Volt—Carbon
R4	130-104	9M Ohm—1 Watt—20%—100 Volt—Carbon
R5	130-104	9M Ohm—1 Watt—20%—100 Volt—Carbon
R6	130-27	50 Ohm—½ Watt—20%—3 Volt—Carbon
R7	130-19	1 Meg Ohm—½ Watt—20%—100 Volt—Carbon
R8	101-46	1 Meg Ohm—Volume Control
R9	130-4	3 Meg Ohm—½ Watt—20%—100 Volt—Carbon
R10	130-108	100M Ohm—½ Watt—20%—50 Volt—Carbon
R11	130-102	500M Ohm—⅛ Watt—10%—50 Volt—Carbon
R12, R13, R14	106-26	220 Ohm; 32 Ohm; 52 Ohm
R15	101-53	50M Ohm—Tone Control
R16	130-110	1 Meg Ohm—1/10 Watt—10%—100 Volt—Carbon
		CONDENSERS
C1	100-22	.05 x 200 Volt—25%
C2	100-20	.1 x 200 Volt—25%
C3	129-39	.00005 Mica (MT—0)—20%
C4	124-28	Series Pad (80—225)
C5	129-56	.00055 Mica (MT—0)—10%
C6	129-55	.0034 Mica (MW—W)—2½%
C7	129-54	.008 Mica (MW—W)—2½%
C8	100-20	.1 x 200 Volt—25%
C9	100-22	.05 x 200 Volt—25%
C10	129-12	.00025 Mica (MT—0)—20%
C11	100-11	.01 x 400 Volt—25%
C12	129-2	.0005 Mica (MT—0)—20%
C13	100-11	.01 x 400 Volt—25%
C14	100-27	.025 x 600 Volt—25%
C15	103-6	8 Mfd. x 350 Volt Electrolytic
C16	103-7	8 Mfd. x 300 Volt Electrolytic
C17	100-25	.002 x 600 Volt—20%
		PARTS
T1	113-49	Broadcast Antenna Coil
T2	111-50	S.W.—M.W. Antenna Coil
T3	111-51	B.C.—Pre-Selector Coil Assem.
T4	110-38	B.C. Oscillator Coil
T5	110-39	S.W.—M.W. Oscillator Coil
T6	108-74	Input I.F.—465 K.C.
T7	108-73	Output I.F.—465 K.C.
S	125-17	Band Switch

©John F. Rider, Publisher

Model 686 Series A & B

TUBE COMPLEMENT

The tube complement of the model 686 and model 786 consists of the latest "Metal-Glass" tubes which are interchangeable with metal tubes. They are as follows:

1-Type 6L7 Pentagrid Mixer, First Detector.
1-Type 6C5 Oscillator.
1-Type 6K7 Remote Cut-off Pentode, I.F. Amplifier (465 K.C.).
1-Type 6Q7 Duplex Diode Triode Second Detector, A.V.C. and First Audio.
1-Type 6F6 Pentode Output Amplifier.
1-Type 5Y3 or 5W4 High Vacuum Rectifier. (Note: 5Y3 available in "Metal-Glass" only.)
1-Type 6G5 Cathode-Ray Tuning Indicator. (Note: 6G5 available in all glass only, and only with model 786.)

The tube complement of the model 685 is as follows:

1-Type 6L7 Pentagrid Mixer, First Detector.
1-Type 6C5 Oscillator.
1-Type 6K7G Remote Cut-off Pentode, I.F. Amplifier (465 K.C.).
1-Type 6Q7G Duplex Diode Triode Second Detector, A.V.C. and First Audio.
1-Type 6F6G Pentode Output Amplifier.
1-Type 5Y3 High Vacuum Rectifier.

ALIGNING INSTRUCTIONS:

CAUTION:—No aligning adjustments should be attempted without first thoroughly checking over all other possible causes of trouble, such as poor installations, open or grounded antenna systems, low line voltages, defective tubes, condensers and resistors. In order to properly align this chassis, an oscillator (generator) is absolutely necessary. No aligning adjustments should be attempted with the chassis in the cabinet. Remove the knobs and the four bolts which are used to fasten the chassis.

All adjustments should be made with a non-metallic screw driver.

DUMMY ANTENNAS:

The following dummy antennas are used in aligning and are referred to in the following alignment instructions as "Dummy 1," "Dummy 2," and "Dummy 3."

Dummy 1: (I.F.)—Consists of a .1 mfd. condenser connected in series with the external oscillator.

Dummy 2: (Broadcast)—Consists of a 200 mmfd. condenser and a 20 ohm resistor connected in series with each other and in series with the external oscillator.

Dummy 3: (Middle and Short Wave)—Consists of a .1 mfd. condenser and a 400 ohm resistor connected in series with each other and in series with the external oscillator.

RESONANCE INDICATOR:

Use as a resonance indicator an output meter connected across the primary of the speaker input transformer, or by means of an adapter between the plate and screen terminals of the type 6F6 output tube. Maximum deflection of the meter indicates resonance. Use only enough signal to get a readily readable output. A low range output meter or the low scale of a multi-range meter should be used.

ALIGNING I.F. TRANSFORMERS; (465 K.C.):

Part No. 108-73 Output I.F. Transformer.
Part No. 108-74 Input I.F. Transformer.

These I.F. transformers have two adjustments, both of which are accessible from the top of chassis (see top view).

1. With volume control full on (the extreme right of its rotation), the band changing switch in the broadcast position, (extreme left of its rotation), and with the variable condenser set to approximately 1400 kilocycles, make the following adjustments:
   (a) Connect external oscillator set at 465 kilocycles, in series with "Dummy 1," to the control grid cap of the type 6K7 tube, and adjust the output I.F. transformer (No. 108-73) to resonance.
   (b) With "Dummy 1" still connected, move oscillator output clip from grid of 6K7 to grid cap to 6L7 and adjust input I.F. transformer (No. 108-74) to resonance.
   (c) With oscillator still connected to 6L7, readjust output I.F. transformer (108-73) if necessary.

ALIGNMENT PROCEDURE

The following adjustments to be made after the I.F.'s have been aligned as explained above.

BROADCAST BAND ALIGNMENT:

535 to 1720 Kilocycles

1. With band changing switch in the broadcast position, extreme left of its rotation, and with gang condenser in its minimum capacity position, plates entirely out of mesh, and with external oscillator connected in series with "Dummy 2" to tan antenna lead and black ground lead, make following adjustments:
   (a) Set external oscillator to 1720 K.C. and adjust broadcast oscillator trimmer to resonance (adjustment number 1; see bottom view of coil assembly. Fig. 3.)
   (b) Re-set external oscillator to 1550 K.C., rotate variable gang condenser and pick up signal. Adjust broadcast antenna trimmer (Adjustment number 4) to resonance; also adjust preselector trimmer which is mounted on the top of the rear section of the three gang variable tuning condenser to resonance. (See top view of chassis, Fig. 1, for location of this adjustment.)
   (c) Re-set external oscillator to 600 K.C., and adjust broadcast series pad to resonance by rotating condenser to approximately 660 K.C., rocking it slowly to and fro until by adjusting series pad maximum output is attained. This adjustment is located on the bottom of the chassis directly under the variable gang condenser. (See bottom view of chassis, Fig. 3.)
   (d) Repeat adjustments "a" and "b" until sensitivity is at its maximum.
   (e) Check for tracking and sensitivity at 1000 kilocycles. Under no circumstances bend plates of variable condenser sections to correct tracking.

SHORT WAVE BAND ALIGNMENT:

5.2 to 18.3 Megacycles

1. With band changing switch in the short wave position, extreme right of its rotation, and with external oscillator set at 17 megacycles and connected in series with "Dummy 3" to the tan antenna and black ground lead, make the following adjustments:
   (a) Move dial pointer to 17 megacycles and adjust short wave oscillator (Adjustment number 3) and short wave antenna (Adjustment number 6) to resonance.
   (b) Re-set external oscillator to 6 megacycles and pick up signal by rotating variable condenser and check sensitivity.
   (c) Re-set external oscillator and check set at 18.1 megacycles and 5.8 megacycles for band coverage.

NOTE: It is extremely necessary in making all of these adjustments that the fundamental oscillator signal be tuned in and not the image frequency which will fall below the fundamental. An example of this is an image of a fundamental 18.3 megacycle signal appears near 17.4 megacycles.

MIDDLE WAVE BAND ALIGNMENT:

1095 to 5800 Kilocycles

1. With band changing switch in the middle wave position, center of its rotation, and with external oscillator set at 5000 kilocycles and connected in series with "Dummy 3" to the tan antenna and black ground lead, make the following adjustments:
   (a) Move dial pointer to 5000 kilocycles and adjust middle wave oscillator (Adjustment number 2) and middle wave antenna (Adjustment number 5) to resonance.
   (b) Re-set external oscillator to 1800 kilocycles and pick up signal by rotating variable condenser and check sensitivity.
   (c) Re-set external oscillator and check set at 5400 kilocycles and 1700 kilocycles for band coverage.

LIST OF REPAIR PARTS

(Serial No. 6E249476 and up)

Part No.	Description	Circuit Diagram Reference	List Price
	CONDENSERS		
100-11	.01 x 400 Volt Tubular	C11-C15	$0.25
100-10	.1 x 200 Volt Tubular	C2-C8	.25
100-22	.05 x 200 Volt Tubular	C1-C9	.25
100-25	.042 x 400 Volt Tubular	C17	.25
100-27	.025 x 600 Volt Tubular	C14	.25
108-6	8 Mfd. x 350 Volt Electrolytic	C18	.65
108-7	8 Mfd. x 300 Volt Electrolytic	C16	.75
129-3	.0005 Mica—Type MT—10%	C12	.25
129-12	.000025 Mica—Type MT—10%	C10	.25
129-39	.00006 Mica—Type MT—10%	C3	.25
129-54	.003 Mica—Type MW—2½%	C7	.25
129-55	.0024 Mica—Type MW—2½%	C6	.25
129-59	.00055 Mica—Type MT—10%	C5	.25
	RESISTORS		
106-26	Metal Clad Resistor	R12-13-14	$0.35
180-4	5 Meg Ohm—½ Watt—20%—150 Volt Carbon	R9	.20
180-12	50M Ohm—½ Watt—20%— 25 Volt Carbon	R3	.20
180-19	1 Meg Ohm—½ Watt—20%—100 Volt Carbon	R7	.20
180-20	100 M Ohm—½ Watt—20%— 50 Volt Carbon	R1	.20
180-27	50 Ohm—½ Watt—20%— 2 Volt Carbon	R6	.20
180-102	500 M Ohm—½ Watt—10%— 50 Volt Carbon	R11	.20
180-103	100 M Ohm—½ Watt—10%— 50 Volt Carbon	R10	.20
180-104	9M Ohm— 1 Watt—20%—100 Volt Carbon	R4-R5	.20
180-105	150 Ohm—½ Watt—20%— 10 Volt Carbon	R2	.20
	COILS		
108-72	Output I.F. Coil Assem. Comp. with Can.	T7	$1.50
108-74	Input I.F. Coil Assem. Comp. with Can.	T6	1.50
110-38	Broadcast Oscillator Coil Assem. Complete with Can.	T4	.50
110-39	Mid Wave and Short Wave Oscillator Assem. less Can.	T5	1.50
111-49	Broadcast Antenna Coil Assembly Complete with Can.	T1	.75
111-50	Mid Wave and Short Wave Antenna Coil Assem. less Can.	T2	1.30
111-51	Broadcast Preselector Coil Assembly	T3	.75
	SOCKETS		
121-3	Five Prong Socket—Marked "5PKR"		$0.10
121-12	Seven Prong Socket—Marked "6K7"		.10
121-14	Seven Prong Socket—Marked "6P5"		.10
121-16	Five Prong Socket—Marked "5Y3"		.10
121-17	Six Prong Socket—Marked "6C5"		.10
121-18	Seven Prong Socket—Marked "6L7"		.10
121-26	Seven Prong Socket—Marked "6Q7"		.10
	SPEAKERS		
114-15	Six Inch Dynamic Speaker		$5.00
114-16	Five Inch Dynamic Speaker		4.50
	TRANSFORMERS		
104-52	50/60 Cycle Power Transformer		$3.50
104-53	25 Cycle Power Transformer		4.50
104-54	Universal Transformer 25 Cycle Primary		5.00
104-55	Universal Transformer 40 Cycle Primary		5.00
	MISCELLANEOUS		
101-46	Volume Control and Switch	R2	$1.25
101-43	Tone Control Model 686 Series A	R15	.50
101-63	Tone Control, Model 686 Series B, and Model 786	R15	.65
105-28	Three Gang Variable Condenser		4.00
107-5	Line Cord and Plug		.50
115-25	Antenna, Oscillator, Shield		.15
124-23	J-3 Series Pad 2 Pl.	C4	.25
125-17	Band Switch	S	$0.85
128-45	"Tone" Knob with Spring		.15
128-44	"Volume" Knob with Spring		.15
128-46	"Band Switch" Knob with Spring		.15
128-47	"Tuning" Knob with Spring		.15

PRICES ARE SUBJECT TO CHANGE WITHOUT NOTICE

©John F. Rider, Publisher

GAMBLE-SKOGMO, INC.

MODEL 750
Schematic
Voltage

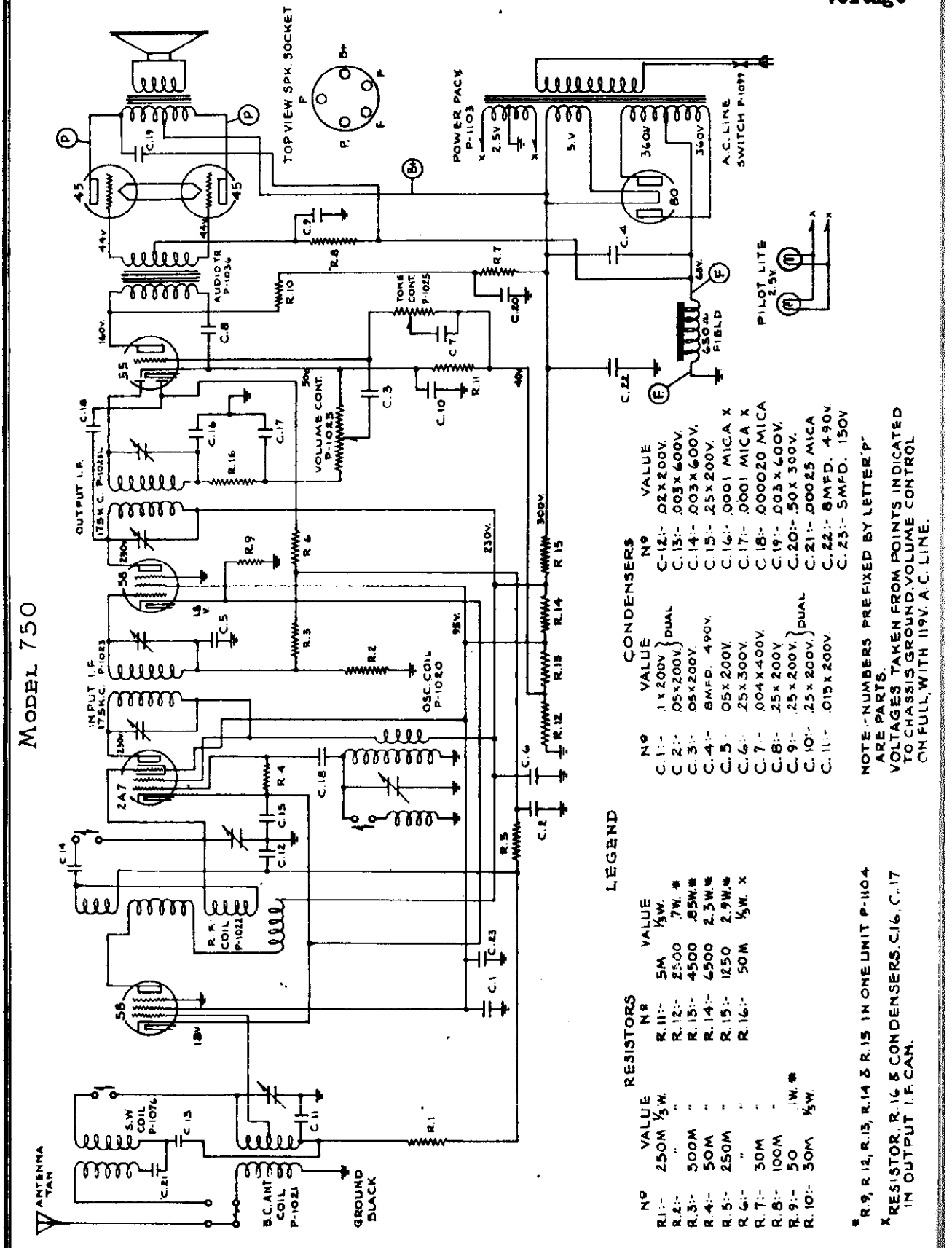

LEGEND

RESISTORS

No	VALUE		No	VALUE	
R.1 :-	250M	½W.	R.11 :-	5M	½W.
R.2 :-	"	"	R.12 :-	2500	.7W. *
R.3 :-	500M	"	R.13 :-	4500	.85W. *
R.4 :-	50M	"	R.14 :-	4500	2.3W. *
R.5 :-	250M	"	R.15 :-	1250	2.9W. *
R.6 :-	"	"	R.16 :-	50M	½W. x
R.7 :-	30M	"			
R.8 :-	100M	"			
R.9 :-	50	1W. *			
R.10 :-	30M	½W.			

CONDENSERS

No	VALUE		No	VALUE	
C.1 :-	.1 x 200V.	DUAL	C.12 :-	.02 x 200V.	
C.2 :-	.05 x 200V.	DUAL	C.13 :-	.003 x 600V.	
C.3 :-	.05 x 200V.		C.14 :-	.003 x 600V.	
C.4 :-	8 MFD. 490V.		C.15 :-	.25 x 200V.	
C.5 :-	.05 x 200V.		C.16 :-	.0001 MICA x	
C.6 :-	.25 x 300V.		C.17 :-	.0001 MICA x	
C.7 :-	.004 x 400V.		C.18 :-	.00002 MICA	
C.8 :-	.25 x 200V.		C.19 :-	.003 x 400V.	
C.9 :-	.25 x 200V.	DUAL	C.20 :-	.50 x 300V.	
C.10 :-	.25 x 200V.	DUAL	C.21 :-	.00025 MICA	
C.11 :-	.015 x 200V.		C.22 :-	8 MFD. 490V.	
			C.23 :-	5 MFD. 150V.	

NOTE:- NUMBERS PREFIXED BY LETTER 'P' ARE PARTS.
VOLTAGES TAKEN FROM POINTS INDICATED TO CHASSIS GROUND. VOLUME CONTROL ON FULL, WITH 119V. A.C. LINE.

* R.9, R.12, R.13, R.14 & R.15 IN ONE UNIT P-1104

x RESISTOR, R.16 & CONDENSERS, C.16, C.17 IN OUTPUT I.F. CAN.

©John F. Rider, Publisher

MODEL 750
Alignment
Socket

GAMBLE-SKOGMO, INC.

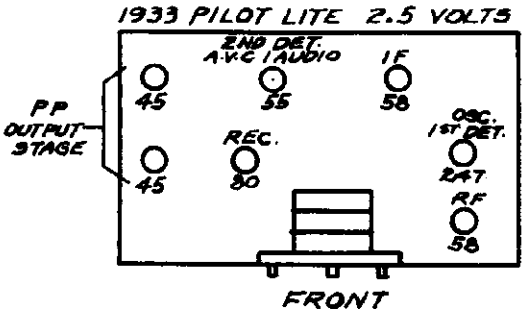

SERVICE MANUAL SEVEN TUBE SUPERHETERODYNE WITH A.V.C. AND SHORT WAVE

105-115 Volts Alternating Current, 50-60 Cycles, 80 Watts. 530-1720 Kilocycles - 1700-4500 Kilocycles.

SERVICE NOTES

Should it be at any time necessary to rebalance this set, the correct proceedure is as follows:

1. Volume and tone controls on full during all alignment.
2. Squelch switch in "no squelch" position (counter-clockwise (left) rotation) during all alignment.
3. Adjust variable squelch control on rear flange of chassis to maximum counter-clockwise (left) position.
4. Set variable condenser in minimum capacity position (plates open) at the start of all aligning.

I.F. ALIGNMENT

The intermediate frequency of model 750 is 175 kilocycles, and is aligned as follows:

1. Connect oscillator (set at 175 kilocycles) to I.F. grid (second 58 tube) and adjust both trimmers of second I.F. transformer (underneath chassis) to resonance (maximum deflection on an output meter connected across the primary of the speaker input transformer).
2. Connect oscillator output to converter grid (2A7 tube) and adjust both trimmers of first I.F. transformer to resonance. Under no conditions touch the trimmers of the second I.F. transformer after adjusting them (see No. 1).

The four trimmers of the two I.F. transformers are all adjusted from the bottom of the chassis (one nut and one screw adjustment on each I.F. transformer trimmer).

BROADCAST BAND ALIGNMENT

Wave changing switch in clockwise (right) position.

1. Connect an oscillator in series with a 200 mmfd. condenser to the Tan (antenna) lead and Black (ground) lead. With the oscillator set at 1720 kilocycles and the variable condenser at its minimum position (extreme right of its rotation), adjust trimmer of oscillator (rear) section to resonance.
2. Change oscillator to 1400 kilocycles, rotate variable to this frequency and adjust R.F. and antenna trimmers (center and front trimmers respectively) to resonance. Do not touch the oscillator trimmer.
3. Check tracking at the following points only: 1200-1000-800-600-534 kilocycles. NOTE: This receiver will be slightly out of track at 534 kilocycles - do not bend plates in an attempt to track it at this frequency. Rotor plates of condensers should not be bent, except if absolutely necessary, and then only on the center and front sections.

SHORT WAVE BAND ALIGNMENT

Wave changing switch in counter-clockwise (left) position.

1. The frequency range of this short wave band is approximately 1700 to 4500 kilocycles.
2. Peak short wave antenna coil to resonance with oscillator set at 1720 kilocycles by slipping primary.
3. Check for sensitivity at the following frequencies only: 1720 and 3700 kilocycles - under no conditions touch trimmers or plates of variable condenser while checking short wave band.

NOTES:

For failure to operate over both bands, check 2A7 tube and connections to and contacts of wave changing switch.

Condenser shaft to which pointer is attached is rotated by means of a celluloid dial attached to the condenser shaft and a bronze friction drive assembly, to which is attached the selector knob. Should this drive ever slip or become rough, it can be adjusted for smooth operation by sliding the bronze washer drive assembly either closer to the variable shaft or farther away from it in the slot in which it is mounted, to insure smooth operation.

©John F. Rider, Publisher

GAMBLE-SKOGMO, INC.

MODEL 770
Schematic
Voltage
Socket, Trimmers

—MODEL 770—SERIES A

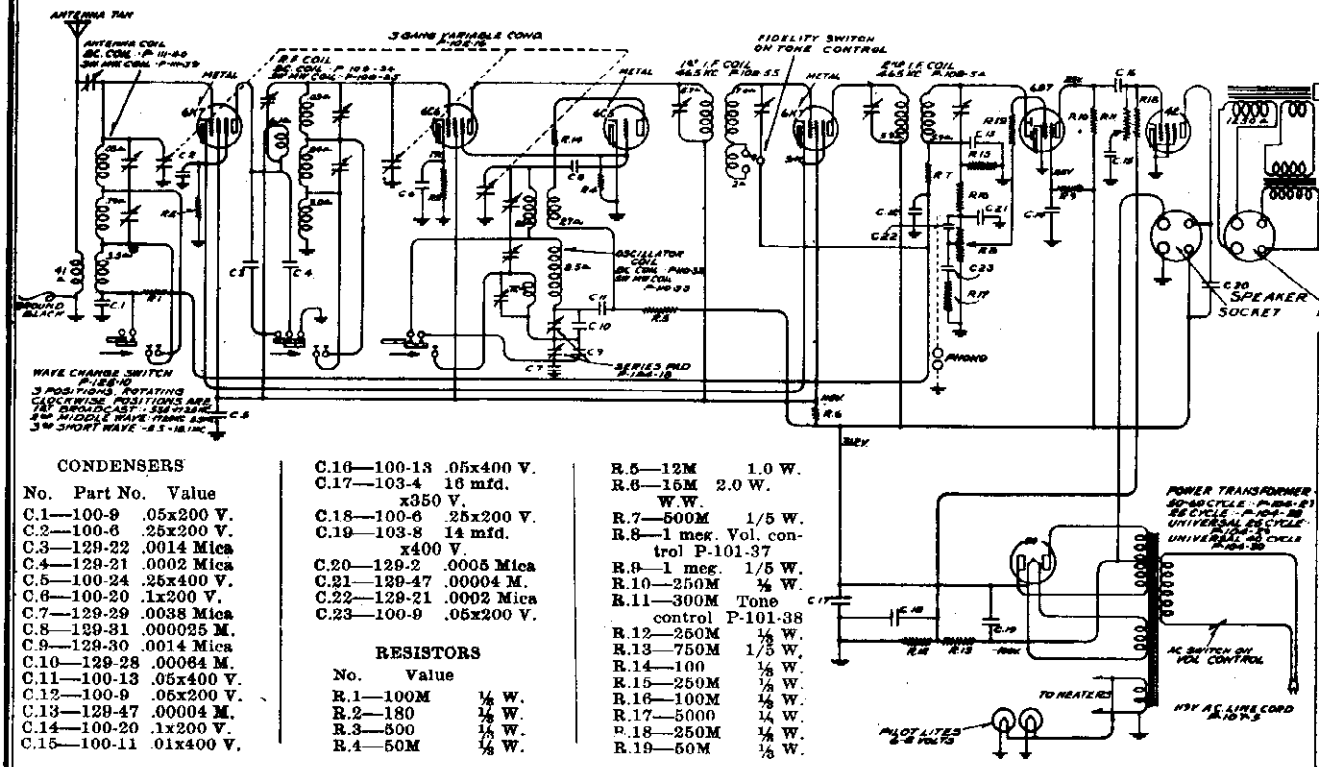

CONDENSERS

No.	Part No.	Value
C.1	100-9	.05x200 V.
C.2	100-6	.25x200 V.
C.3	129-22	.0014 Mica
C.4	129-21	.0002 Mica
C.5	100-24	.25x400 V.
C.6	100-20	.1x200 V.
C.7	129-29	.0038 Mica
C.8	129-31	.000025 M.
C.9	129-30	.0014 Mica
C.10	129-28	.00064 M.
C.11	100-13	.05x400 V.
C.12	100-9	.05x200 V.
C.13	129-47	.00004 M.
C.14	100-20	.1x200 V.
C.15	100-11	.01x400 V.
C.16	100-13	.05x400 V.
C.17	103-4	16 mfd. x350 V.
C.18	100-6	.25x200 V.
C.19	103-8	14 mfd. x400 V.
C.20	129-2	.0005 Mica
C.21	129-47	.00004 M.
C.22	129-21	.0002 Mica
C.23	100-9	.05x200 V.

RESISTORS

No.	Value	
R.1	100M	1/5 W.
R.2	180	1/5 W.
R.3	500	1/5 W.
R.4	50M	1/5 W.
R.5	12M	1.0 W.
R.6	15M	2.0 W. W.W.
R.7	500M	1/5 W.
R.8	1 meg.	Vol. control P-101-37
R.9	1 meg.	1/5 W.
R.10	250M	1/5 W.
R.11	300M	Tone control P-101-38
R.12	250M	1/5 W.
R.13	750M	1/5 W.
R.14	100	1/5 W.
R.15	250M	1/5 W.
R.16	100M	1/5 W.
R.17	5000	1/5 W.
R.18	250M	1/5 W.
R.19	50M	1/5 W.

I. F. FREQUENCY
465 K. C.

TUNING RANGE—
Standard Broadcast Band
535-1725 Kilocycles.
Intermediate Band
1720-5500 Kilocycles
Short Wave Band
5.5-18.1 Megacycles.

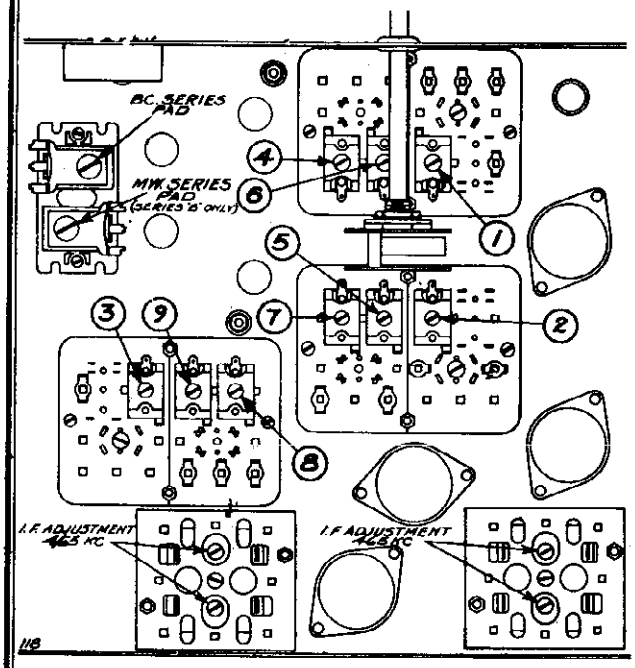

TOP VIEW-

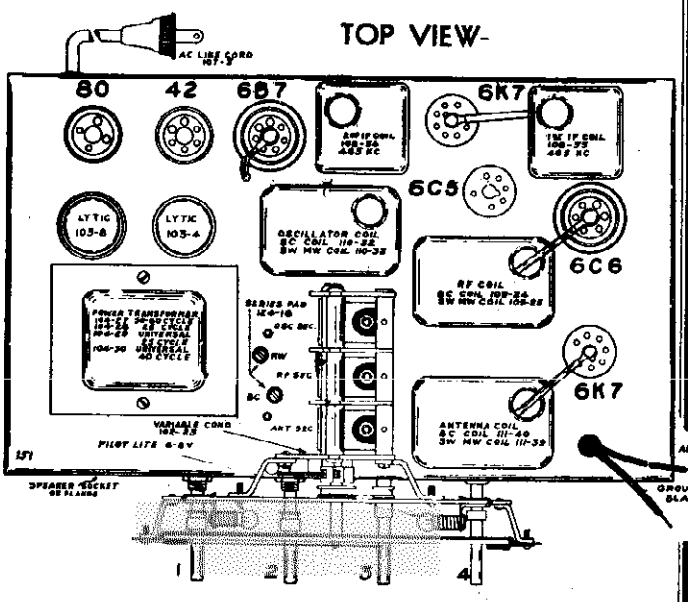

©John F. Rider, Publisher

©John F. Rider, Publisher

MODEL 770 - Series A

7-Tube All Wave Superheterodyne with Avc.

SERVICE NOTES

Voltages taken from different points of circuit to chassis are measured with volume control full on, all tubes in their sockets and speaker connected, with a volt meter having a resistance of 1000 ohms per volt. These voltages are clearly indicated on the circuit diagrams of series A and B.

IN ORDER TO PREVENT SIGNAL FROM ACTING UPON AVC AND AFFECTING ACCURACY OF VOLTAGE MEASUREMENTS, AERIAL AND GROUND LEADS SHOULD BE SHORT CIRCUITED WHILE MAKING MEASUREMENTS.

All voltages are to be measured with 119 volts on the primary of the power transformer.

Resistances of coils and transformer windings are indicated in ohms on schematic circuit diagrams.

To check for open by-pass condensers, shunt each condenser with another condenser of the same capacity and voltage rating, which is known to be good, until the defective unit is located.

Excessive hum, stuttering, low volume and a reduction in all D.C. voltages is usually caused by a shorted electrolytic condenser, open by-pass condensers frequently cause oscillation and distorted tone.

ALIGNING INSTRUCTIONS

Dummy Antennas

The following dummy antennas are used in aligning and are referred to in the following alignment instructions as "Dummy 1", "Dummy 2", and "Dummy 3".

Dummy 1: (I.F.)—Consists of a .1 mfd. condenser connected in series with the external oscillator.

Dummy 2: (Broadcast)—Consists of a 200 mmfd. condenser and a 20 ohm resistor connected in series with each other and in series with the external oscillator.

Dummy 3: (Intermediate and Short Wave)—Consists of a .1 mfd. condenser and a 400 ohm resistor connected in series with each other and in series with the external oscillator.

Resonance Indicator:

Use as a resonance indicator an output meter connected across the primary of the speaker input transformer, or by means of an adapter between the plate and screen terminals of the type 42 output tube. Maximum deflection of the meter indicates resonance. Use only enough signal to get a readily readable output. A low range output meter or the low scale of a multi-range meter should be used.

CAUTION:

No aligning adjustments should be attempted without first thoroughly checking over all other possible causes of trouble, such as poor installations, open or grounded antenna systems, low line voltages, defective tubes, condensers and resistors. In order properly to align this chassis, an oscillator (generator) is absolutely necessary. No aligning adjustments should be attempted with the chassis in the cabinet. To remove the knobs, pull them off and to take the chassis out of the cabinet, remove the four bolts by which it is fastened.

ALIGNING I.F. TRANSFORMERS (465 K.C.)

Part No. 108-54 Output I.F. Transformer
Part No. 108-56 Input I.F. Transformer

These I.F. transformers have two adjustments, both of which are accessible from the underside of chassis (see bottom view).

1. With volume control full on, (the extreme right of its rotation), the wave changing switch in the broadcast position, (extreme left of its rotation), the tone control on "Hi" part of the sharp position (as much right rotation as possible without operating the Hi Fidelity switch), and with the variable condenser set to approximately 1400 kilocycles, make the following adjustments:

   (a) Connect external oscillator set at 465 kilocycles, in series with "Dummy 1", to the control grid cap of the type 6K7 tube, located between the two I.F. transformers, and adjust the output I.F. transformer to resonance.

   (b) With "Dummy 1" still connected, move oscillator output clip from grid of 6K7 to grid cap to 6C6 and adjust input I.F. transformer to resonance.

   (c) With oscillator still connected to 6C6, re-adjust output I.F. transformer.

ALIGNMENT PROCEDURE

The following adjustments to be made after the I.F.'s have been aligned as explained above.

BROADCAST BAND ALIGNMENT:

1. With wave changing switch in the broadcast position, extreme left of its rotation, and with external oscillator set at 600 kilocycles and connected in series with "Dummy 2" to the tan antenna and black ground lead, make the following adjustments:

   (a) Adjust broadcast series pad to resonance with oscillator. Keep set in tune with oscillator by slowly rocking to and fro the variable condenser until maximum output is obtained. Note: This adjustment is accessible from the top of the chassis and is located between the variable condenser and the electrolytic condenser. See top view.

   (b) Re-set external oscillator to 1400 K.C.; move dial pointer to 1400 K.C. and adjust oscillator (adjustment number 3), R.F. (adjustment number 2) and antenna (adjustment number 1) to resonance. See bottom view for location of these adjustments.

   (c) Repeat adjustments "a" and "b" until sensitivity is at its maximum.

NOTE: IT IS EXTREMELY NECESSARY IN MAKING ALL OF THESE ADJUSTMENTS THAT THE FUNDAMENTAL OSCILLATOR SIGNAL BE TUNED IN AND NOT THE IMAGE FREQUENCY WHICH WILL FALL BELOW THE FUNDAMENTAL.

SHORT WAVE BAND ALIGNMENT:

1. With wave changing switch in the short wave position, extreme right of its rotation, and with external oscillator set at 17 megacycles and connected in series with "Dummy 3" to the tan antenna and black ground lead, make the following adjustments:

   (a) Move dial pointer to 17 megacycles and adjust short wave oscillator (adjustment number 8), short wave R.F. (adjustment number 7) and short wave antenna (adjustment number 6) to resonance.

   (b) Re-set external oscillator to 6 megacycles and pick up signal by rotating variable condenser and check for sensitivity.

INTERMEDIATE BAND ALIGNMENT:

1. With wave changing switch in the intermediate wave position, center of its rotation, and with external oscillator set at 1800 K.C. and connected in series with "Dummy 3" to the tan antenna and black ground lead, make the following adjustments:

   (a) Rotate variable condenser to approximately 1800 K.C., tune in oscillator signal and adjust M.W. series pad (see top view) to resonance. Slowly rock condenser to and fro while making this adjustment to be sure maximum output is obtained.

   (b) Set external oscillator at 5 M.C., rotate condenser, pick up signal and adjust intermediate wave R.F. (adjustment number 5), intermediate wave antenna (adjustment number 4) and intermediate wave oscillator (adjustment number 9) to resonance.

   (c) Re-check broadcast alignment and if it is found necessary to re-adjust either R.F. or antenna trimmers, repeat the 17 M.C. short wave and 5 M.C. intermediate wave adjustments.

PRICES ARE SUBJECT TO CHANGE WITHOUT NOTICE

REPAIR PARTS LIST—

	CONDENSERS	
100-8	.25 x 200 Volt Tubular Condenser—with Bracket	$0.35
100-9	.05 x 200 Volt Tubular Condenser	.25
100-11	.01 x 400 Volt Tubular Condenser	.25
100-13	.05 x 400 Volt Tubular Condenser	.25
100-20	.1 x 200 Volt Tubular Condenser	.25
100-24	.25 x 400 Volt Tubular Condenser—with Bracket	.35
103-4	16 Mfd. x 350 Volt Electrolytic	1.35
103-8	14 Mfd. x 400 Volt Electrolytic	1.35
115-12	.1 - .25 x 200 Volt Dual Tubular	.50
129-2	.0005 Mica - Type MT - 20%	.25
129-21	.0002 Mica - Type MT - 20%	.25
129-22	.001¢ Mica - Type MW - 5%	.25
129-28	.00084 Mica - Type MT - 5%	.25
129-29	.0008 Mica - Type MW - 2½%	.50
129-30	.001¢ Mica - Type MW - 20%	.25
129-31	.0000525 Mica - Type MT - 1%	.25
129-47	.00004 Mica - Type MT - 30%	.25
	RESISTORS	
130-3	500M Ohm - ½ Watt - 20% - 100 Volts - Carbon	.20
130-11	250M Ohm - ½ Watt - 20% - 80 Volts - Carbon	.20
130-19	1 Meg Ohm - ½ Watt - 20% - 100 Volts - Carbon	.20
130-20	100M Ohm - ½ Watt - 20% - 60 Volts - Carbon	.20
130-22	6M Ohm - ½ Watt - 20% - 10 Volts - Carbon	.20
130-37	750M Ohm - ½ Watt - 20% - 60 Volts - Carbon	.20
130-49	12M Ohm - 1 Watt - 20% - 160 Volts - Carbon	.20
130-52	50M Ohm - ½ Watt - 20% - 10 Volts - Carbon	.20
130-53	150 Ohm - ½ Watt - 10% - 10 Volts - Carbon	.20
130-54	500 Ohm - ½ Watt - 20% - 10 Volts - Carbon	.20
130-80	100 Ohm - ½ Watt - 20% - 10 Volts - Carbon	.20
130-81	15M Ohm - 2 Watt - 20% - 160 Volts - Wire Wound	.40
130-92	250M Ohm - ½ Watt - 20% - 60 Volts - Carbon	.20
	COILS	
108-54	Output I.F. Coil Assembly Complete - Less Can	1.50
108-55	Input I.F. Coil Assembly Complete - Less Can	2.50
109-24	Broadcast R.F. Coil Assembly Complete	.50
109-25	Mid-Wave & Short Wave R.F. Coil Assembly Complete—Less Can	1.50
110-32	Broadcast Oscillator Coil Assembly Complete—Less Can	.50
110-33	Mid-Wave & Short Wave Oscillator Coil Assembly Complete—Less Can	1.00
111-39	Mid- Wave & Short Wave Antenna Coil Assembly Complete—Less Can	1.00
111-40	Broadcast Antenna Coil Assembly Complete—Less Can	.75
	TRANSFORMERS	
104-27	50/60 Cycle Power Transformer	6.50
104-28	25 Cycle Power Transformer	7.00
104-29	Universal - 25 Cycle Primary	7.50
104-30	Universal - 40 Cycle Primary	7.00
	SOCKETS	
121-6	Six Prong Type "6C8"	.10
121-6	Six Prong Type "42"	.10
121-7	Seven Prong Type "6J7"	.10
121-9	Four Prong Type "Spkr"	.10
121-9	Four Prong Type "80"	.10
121-12	Seven Prong Type "6K7"	.10
121-17	Six Prong Type "6C6"	.10
	SPEAKERS	
114-37	Eight Inch Dynamic Speaker	6.50
114-30	Ten Inch Dynamic Speaker	8.00
	MISCELLANEOUS	
101-37	Volume Control and Switch	1.35
101-33	Tone Control and Fidelity Switch	1.35
103-23	Three Gang Variable Condenser	5.00
107-5	Line Cord & Plug	.50
115-22	Tube Shield	.15
115-25	Antenna, Oscillator and R.F. Shield	.15
115-23	I.F. Shield	.15
124-13	J-5-4D Series Dual Pad	.20
125-13	Wave Change Switch	.20
128-15	Small Wood Knob with Spring	.15
128-16	Large Wood Knob with Set Screw	.30
128-17	Large Wood Knob with Spring	.15

GAMBLE-SKOGMO, INC.

MODELS 777C, 777L
Series A & B
Schematics, Voltage

SERIES A

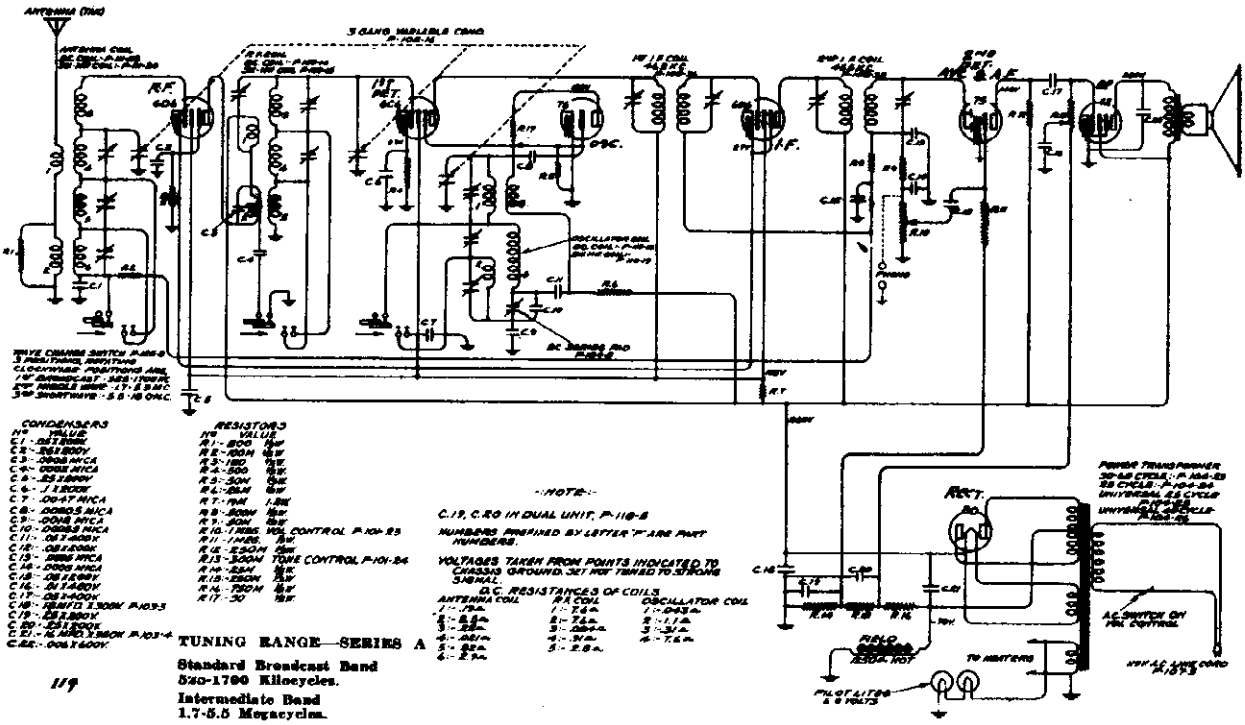

CONDENSERS

No.	Value
C1	.05 1,000V
C2	.65-1,000V
C3	.0005 MICA
C4	.0005 MICA
C5	.05-1,000V
C6	.05 1,000V
C7	.1 1,000V
C8	.0047 MICA
C9	.0005 MICA
C10	.0004 MICA
C11	.05 1,000V
C12	.05 1,000V
C13	.0005 MICA
C14	.0005 MICA
C15	.05 1,000V
C16	.1 1,000V
C17	.05 1,000V
C18	.05 1,000V
C19	.25 1,000V
C20	.25 1,000V
C21	16-16-16 MFD. 350V. P-103-4
C22	.005 1,000V.

RESISTORS

No.	Value
R1	800 ½W
R2	100H ½W
R3	1MΩ ½W
R4	500 ½W
R5	500 ½W
R6	2.5M ½W
R7	1M 1.5W
R8	500H ½W
R9	20M ½W
R10	1 MEG. VOL CONTROL P-101-25
R11	1 MEG. ½W
R12	2.5M ½W
R13	3.2M TONE CONTROL P-101-24
R14	25M ½W
R15	750M ½W
R16	30 1W

NOTE

C.19, C.20 IN DUAL UNIT, P-118-8

NUMBERS PREFIXED BY LETTER "P" ARE PART NUMBERS.

VOLTAGES TAKEN FROM POINTS INDICATED TO CHASSIS GROUND. SET NOT TUNED TO STRONG SIGNAL.

D.C. RESISTANCES OF COILS

Antenna Coil	R.F. Coil	Oscillator Coil
1 - .2Ω	1 - 7.4Ω	1 - .04Ω
2 - .6Ω	2 - 7.2Ω	2 - 1.1Ω
3 - .6Ω	3 - 20Ω	3 - .3Ω
4 - .06Ω	4 - .9Ω	4 - 7.6Ω
5 - .02Ω	5 - 2.8Ω	
6 - .2Ω		

TUNING RANGE—SERIES A

Standard Broadcast Band
530-1700 Kilocycles.
Intermediate Band
1.7-5.5 Megacycles.
Short Wave Band
5.5-18.0 Megacycles.

I. F. Frequency — 465 Kilocycles

SERIES B

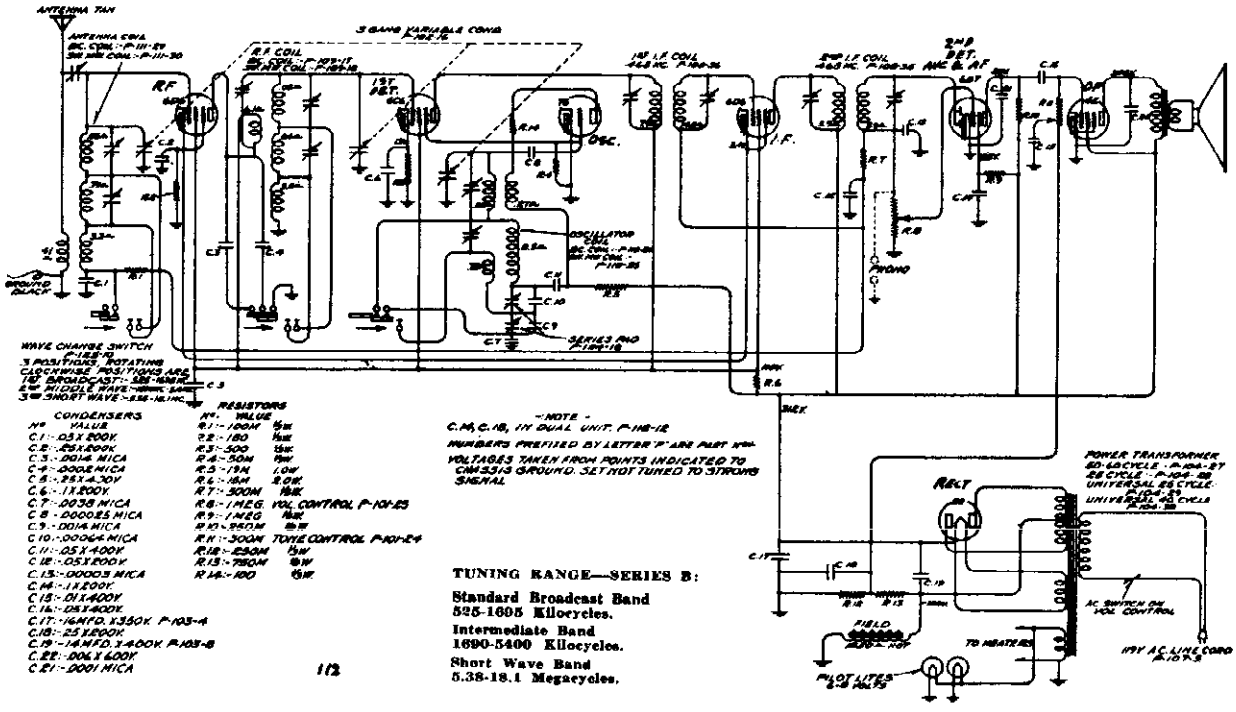

CONDENSERS

No.	Value
C1	.05 1,000V.
C2	.65-1,000V.
C3	.0014 MICA
C4	.0008 MICA
C5	.25-1.4A.-30V
C6	.1 1,000V
C7	.0038 MICA
C8	.0000 85 MICA
C9	.0014 MICA
C10	.0004 MICA
C11	.05-1,400V.
C12	.05-1,000V.
C13	.00005 MICA
C14	.1 1,000V.
C15	.01-1,400V.
C16	.05-1,400V.
C17	16-16 MFD. 350V. P-103-4
C18	.25-1,000V.
C19	.1-4 MFD. 1,400V. P-103-8
C20	.006 1,400V.
C21	.0001 MICA

RESISTORS

No.	Value
R1	100H ½W
R2	180 1W
R3	500 1W
R4	50M 1W
R5	1M 1.0W
R6	1M 2.0W
R7	500M ½W
R8	1 MEG. VOL CONTROL P-101-25
R9	1 MEG. ½W
R10	250M ½W
R11	300M TONE CONTROL P-101-24
R12	25M ½W
R13	750M 2W
R14	100 ½W

NOTE

C.16, C.18, IN DUAL UNIT, P-118-12

NUMBERS PREFIXED BY LETTER "P" ARE PART NOS.

VOLTAGES TAKEN FROM POINTS INDICATED TO CHASSIS GROUND. SET NOT TUNED TO STRONG SIGNAL

TUNING RANGE—SERIES B:

Standard Broadcast Band
525-1605 Kilocycles.
Intermediate Band
1690-5400 Kilocycles.
Short Wave Band
5.38-18.1 Megacycles.

©John F. Rider, Publisher

MODELS 777C, 777L
Socket, Trimmers
Parts List

GAMBLE-SKOGMO, INC.

TOP VIEW - SERIES A

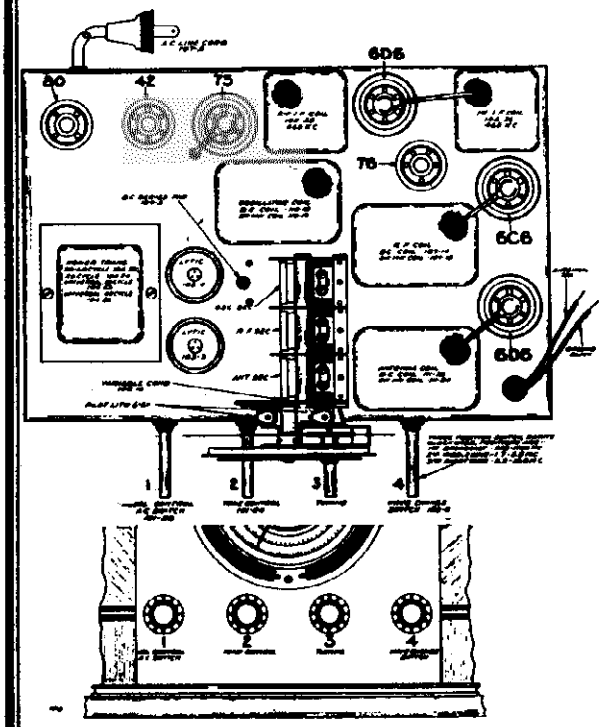

TOP VIEW - SERIES B

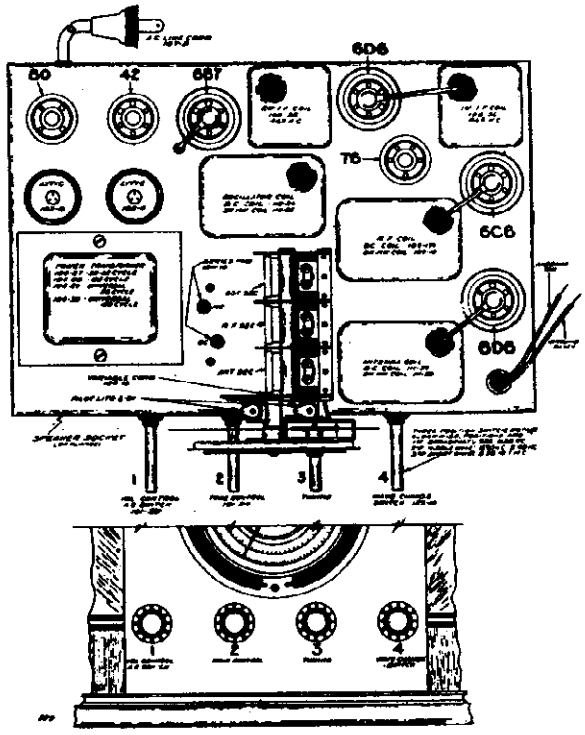

Parts Used In Ser. A Only	Parts Used In Ser. B Only	DESCRIPTION	List Price Each
		CONDENSERS	
		Unless Otherwise Listed—All Molded Mica	$0.25
		Unless Otherwise Listed—All Single Section Tubular Paper By-Pass	.25
		Unless Otherwise Listed—All Dual Section Tubular Paper By-Pass	.50
103-3	Not Used.	18 Mfd. x 300 V. Electrolytic	1.35
103-4	103-4	16 Mfd. x 350 V. Electrolytic	1.35
Not Used.	103-5	14 Mfd. x 400 V. Electrolytic	1.35
129-20	Not Used.	.0047 Mica—Type MH + or — 5%	.50
Not Used.	129-29	.0088 Mica—Type MW + or — 2½%	.50
		RESISTORS	
		Unless Otherwise Listed—All Resistors	.20
Not Used.	130-61	15M Ohm—2 Watt + or — 20%—180 V.	.40
		COILS	
108-35	108-35	Output I.F. Coil Assembly Complete—Less Can	1.50
108-36	108-36	Input I.F. Coil Assembly Complete—Less Can	1.50
109-14	Not Used.	Broadcast R.F. Coil Assembly Complete—Less Can	1.00
109-15	Not Used.	Mid-Wave & Short Wave R.F. Coil Assembly Complete—Less Can	1.50
Not Used.	109-17	Broadcast R.F. Coil Assembly Complete—Less Can	.70
Not Used.	109-18	Mid-Wave & Short Wave R.F. Coil Assembly Complete—Less Can	1.50
110-18	Not Used.	Broadcast Oscillator Coil Assembly Complete—Less Can	.50
110-19	Not Used.	Mid-Wave & Short Wave Oscillator Coil Assembly Complete—Less Can	1.25
Not Used.	110-24	Broadcast Oscillator Coil Assembly Com.—Less Can	.75
Not Used.	110-25	Mid-Wave & Short Wave Oscillator Coil Assembly Complete—Less Can	1.50
111-23	Not Used.	Broadcast Antenna Coil Assembly Com.—Less Can	1.00
111-24	Not Used.	Mid-Wave & Short Wave Antenna Coil Assembly Complete—Less Can	1.50
Not Used.	111-29	Broadcast Antenna Coil Assembly Com.—Less Can	1.00
Not Used.	111-30	Mid-Wave & Short Wave Antenna Coil Assembly Complete—Less Can	1.50
		TRANSFORMERS	
104-23	Not Used.	50/60 Cycle Power Transformer	3.50
104-24	Not Used.	25 Cycle Power Transformer	5.00
104-25	Not Used.	Universal—25 Cycle Primary	7.50
104-26	Not Used.	Universal—40 Cycle Primary	6.00
Not Used.	104-27	50/60 Cycle Power Transformer	4.50
Not Used.	104-28	25 Cycle Power Transformer	7.00
Not Used.	104-29	Universal—25 Cycle Primary	7.50
Not Used.	104-30	Universal—40 Cycle Primary	7.00
		SPEAKERS	
114-13	114-13	Six Inch Speaker	6.00
114-17	114-17	Eight Inch Speaker	6.50
114-18	114-18	Ten Inch Speaker	8.00

		MISCELLANEOUS	
101-23	101-23	Volume Control and Switch	
101-24	101-24	Tone Control	
102-16	102-16	Three Gang Variable Condenser	
107-5	107-5	Line Cord and Plug	

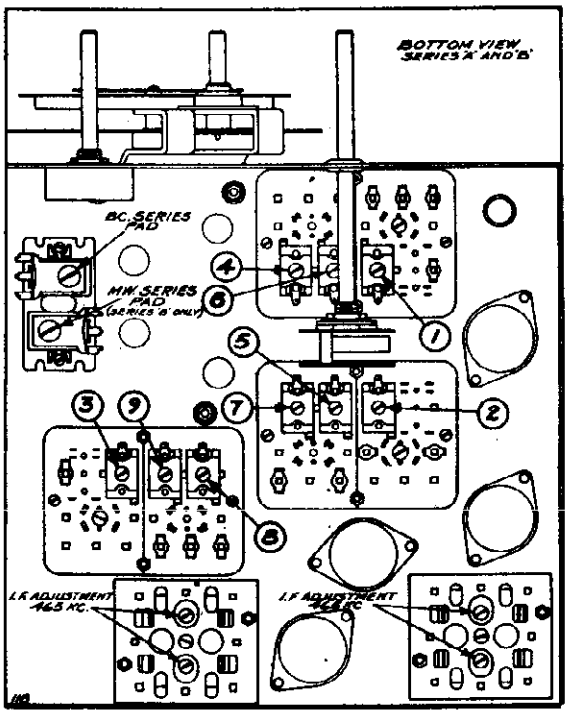

©John F. Rider, Publisher

GAMBLE-SKOGMO, INC.

MODELS 777C, 777L
Series A & B
Alignment

NOTE: IN SERIES B THE TYPE 75 WAS REPLACED BY TYPE 6B7, DUPLEX DIODE PENTODE AS A SECOND DETECTOR, A.V.C. AND AUDIO.

Series A and B chassis are serially numbered on the back flange of the chassis, series A beginning with number "5B104621A" and up, series B chassis beginning with number "5D114175B" and up. Series A and B may be identified by the letter "A" and "B" at the end of the serial numbers.

Transformers are available and chassis are sometimes equipped with universal transformers for operation on 40 and 60 cycles and with primary taps for 105, 125, 165, 220 and 250 volts (see instructions) and also sometimes equipped with 25 cycle transformers with 105-115 volt or 220 volt primaries, not universals.

SERVICE NOTES

Voltages taken from different points of circuit to chassis are measured with volume control full on, all tubes in their sockets and speaker connected, with a volt meter having a resistance of 1000 ohms per volt. These voltages are clearly indicated on the circuit diagrams of series A and B.

IN ORDER TO PREVENT SIGNAL FROM ACTING UPON AVC AND AFFECTING ACCURACY OF VOLTAGE MEASUREMENTS, AERIAL AND GROUND LEADS SHOULD BE SHORT CIRCUITED WHILE MAKING MEASUREMENTS.

All voltages are to be measured with 119 volts on the primary of the power transformer.

ALIGNING INSTRUCTIONS

Dummy Antennas

The following dummy antennas are used in aligning both series A and B and are referred to in the following alignment instructions as "Dummy 1", "Dummy 2", and "Dummy 3".

Dummy 1: (I.F.)—Consists of a .1 mfd. condenser connected in series with the external oscillator.

Dummy 2: (Broadcast)—Consists of a 200 mmfd. condenser and a 20 ohm resistor connected in series with each other and in series with the external oscillator.

Dummy 3: (Intermediate and Short Wave)—Consists of a .1 mfd. condenser and a 400 ohm resistor connected in series with each other and in series with the external oscillator.

Resonance Indicator:

Use as a resonance indicator an output meter connected across the primary of the speaker input transformer, or by means of an adapter between the plate and screen terminals of the type 42 output tube. Maximum deflection of the meter indicates resonance. Use only enough signal to get a readily readable output. A low range output meter or the low scale of a multi-range meter should be used.

ALIGNMENT PROCEDURE SERIES A ONLY

The following adjustments to be made after the I.F.'s have been aligned as explained above.

BROADCAST BAND ALIGNMENT:

1. With wave changing switch in the broadcast position, extreme left of its rotation, and with external oscillator set at 550 kilocycles and connected in series with "Dummy 2" to the tan antenna and black ground lead, make the following adjustments:
   (a) Adjust broadcast series pad to resonance with oscillator. Keep set in tune with oscillator by slowly rocking to and fro the variable condenser until maximum output is obtained. Note: This adjustment is accessible from the top of the chassis and is located between the variable condenser and the electrolytic condenser. See top view.
   (b) Re-set external oscillator to 1500 K.C., move dial pointer to 1500 K.C. and adjust oscillator (adjustment number 3), R.F. (adjustment number 2) and antenna (adjustment number 1) to resonance. See bottom view for location of these adjustments.
   (c) Repeat adjustments "a" and "b" until sensitivity is at its maximum.

NOTE: IT IS EXTREMELY NECESSARY IN MAKING ALL OF THESE ADJUSTMENTS THAT THE FUNDAMENTAL OSCILLATOR SIGNAL BE TUNED IN AND NOT THE IMAGE FREQUENCY WHICH WILL FALL BELOW THE FUNDAMENTAL.

SHORT WAVE BAND ALIGNMENT:

1. With wave changing switch in the short wave position, extreme right of its rotation, and with external oscillator set at 17 megacycles and connected in series with "Dummy 3" to the tan antenna and black ground lead, make the following adjustments:
   (a) Move dial pointer to 17 megacycles and adjust short wave oscillator (adjustment number 8), short wave R.F. (adjustment number 7) and short wave antenna (adjustment number 6) to resonance.
   (b) Re-set external oscillator to 6 megacycles and pick up signal by rotating variable condenser and check for sensitivity.

INTERMEDIATE BAND ALIGNMENT:

1. With wave changing switch in the intermediate position center of its rotation, and with external oscillator set at 5 megacycles and connected in series with "Dummy 3" to the tan antenna and black ground lead, make the following adjustments:
   (a) Move dial pointer to 5 megacycles and adjust intermediate wave oscillator (adjustment number 9), intermediate wave R.F. (adjustment number 5) and intermediate antenna (adjustment number 4) to resonance.
   (b) Re-set external oscillator to 1500 K.C. and pick up signal by rotating variable condenser and check for sensitivity.
   (c) Re-check broadcast sensitivity as outlined under "Broadcast Band Alignment".

Series "A" chassis have no intermediate band series oscillator pad adjustment.

ALIGNMENT PROCEDURE SERIES B ONLY

The following adjustments to be made after the I.F.'s have been aligned as explained above.

BROADCAST BAND ALIGNMENT:

1. With wave changing switch in the broadcast position, extreme left of its rotation, and with external oscillator set at 600 kilocycles and connected in series with "Dummy 2" to the tan antenna and black ground lead, make the following adjustments:
   (a) Adjust broadcast series pad to resonance with oscillator. Keep set in tune with oscillator by slowly rocking to and fro the variable condenser until maximum output is obtained. Note: This adjustment is accessible from the top of the chassis and is located between the variable condenser and the electrolytic condenser. See top view.
   (b) Re-set external oscillator to 1400 K.C., move dial pointer to 1400 K.C. and adjust oscillator (adjustment number 3), R.F. (adjustment number 2) and antenna (adjustment number 1) to resonance. See bottom view for location of these adjustments.
   (c) Repeat adjustments "a" and "b" until sensitivity is at its maximum.

NOTE: IT IS EXTREMELY NECESSARY IN MAKING ALL OF THESE ADJUSTMENTS THAT THE FUNDAMENTAL OSCILLATOR SIGNAL BE TUNED IN AND NOT THE IMAGE FREQUENCY WHICH WILL FALL BELOW THE FUNDAMENTAL.

SHORT WAVE BAND ALIGNMENT:

1. With wave changing switch in the short wave position, extreme right of its rotation, and with external oscillator set at 17 megacycles and connected in series with "Dummy 3" to the tan antenna and black ground lead, make the following adjustments:
   (a) Move dial pointer to 17 megacycles and adjust short wave oscillator (adjustment number 8), short wave R.F. (adjustment number 7) and short wave antenna (adjustment number 6) to resonance.
   (b) Re-set external oscillator to 6 megacycles and pick up signal by rotating variable condenser and check for sensitivity.

INTERMEDIATE BAND ALIGNMENT:

1. With wave changing switch in the intermediate wave position, center of its rotation, and with external oscillator set at 1500 K.C. and connected in series with "Dummy 3" to the tan antenna and black ground lead, make the following adjustments:
   (a) Rotate variable condenser to approximately 1500 K.C., tune in oscillator signal and adjust M.W. series pad (see top view) to resonance. Slowly rock condenser to and fro while making this adjustment to be sure maximum output is obtained.
   (b) Set external oscillator at 5 M.C., rotate condenser, pick up signal and adjust intermediate wave R.F. (adjustment number 5), intermediate wave antenna (adjustment number 4) and intermediate wave oscillator (adjustment number 9) to resonance.
   (c) Re-check broadcast alignment and if it is found necessary to re-adjust either R.F. or antenna trimmers, repeat the 17 M.C. short wave and 5 M.C. intermediate wave adjustments.

ALIGNING I.F. TRANSFORMERS (465 K.C.)

Series A and B.

Series A—Part No. 108-35 Output I.F. Transformer
Series A—Part No. 108-36 Input I.F. Transformer
Series B—Part No. 108-35 Output I.F. Transformer
Series B—Part No. 108-36 Input I.F. Transformer

These I.F. transformers have two adjustments, both of which are accessible from the underside of chassis (see bottom view).

1. With volume control full on, the extreme right of its rotation, and with wave changing switch in the broadcast position, extreme left of its rotation, and with variable condenser set to approximately 1400 kilocycles, make the following adjustments:
   (a) Connect external oscillator set at 465 kilocycles, in series with "Dummy 1", to the control grid cap of the type 6D6 tube, located between the two I.F. transformers, and adjust the output I.F. transformer to resonance.
   (b) With "Dummy 1" still connected, move oscillator output clip from grid of 6D6 to grid cap to 6C8 and adjust input I.F. transformer to resonance.
   (c) With oscillator still connected to 6C8, re-adjust output I.F. transformer.

©John F. Rider, Publisher

MODEL 780
Schematic
Alignment
Parts List

GAMBLE-SKOGMO, INC.

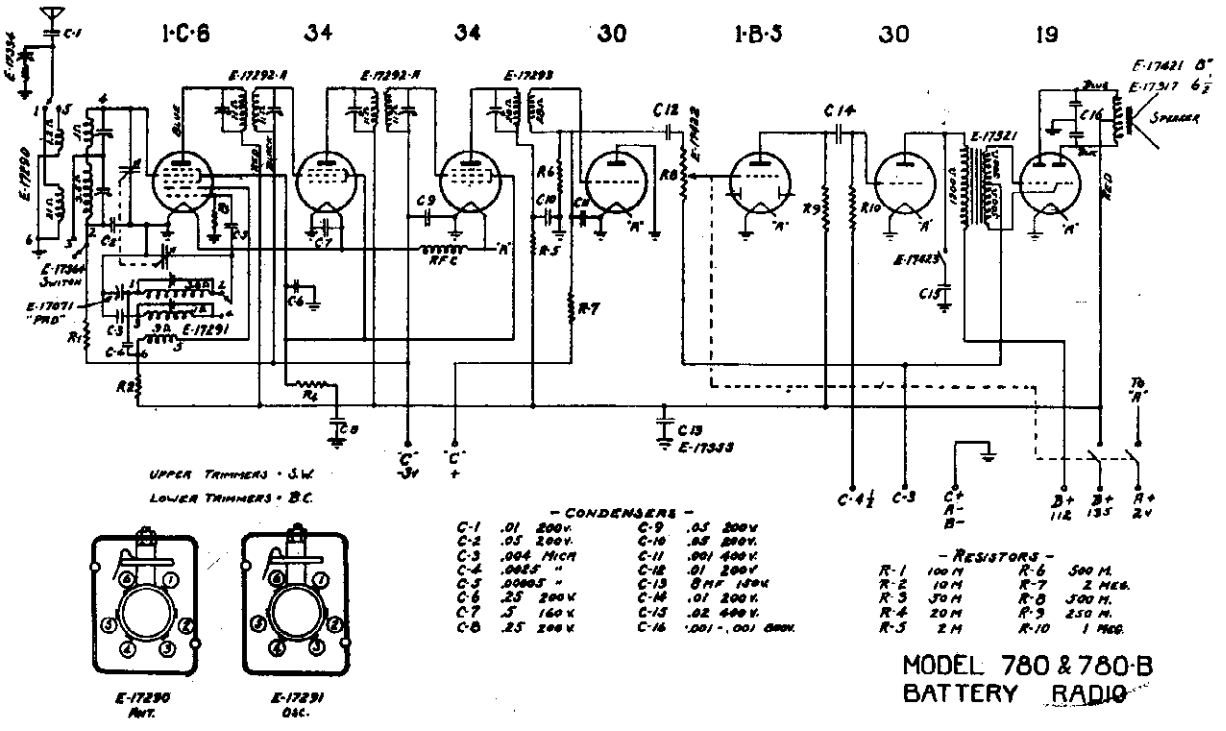

GENERAL Always eliminate all possible sources of trouble external to the receiver itself such as: Defective aerial, ground, or lightning arrestor, tubes, batteries, loud speakers

TUBE FUNCTIONS "1-C-6" First detector—oscillator, "34" first I F amplifier, "34" second I F amplifier, "30" diode second detector, "1-B-5" first audio, "30" audio driver, "19" class B power tube.

CHECKING PARTS....The resistance of coils and resistors is shown on the circuit diagram together with condenser capacities. Any defective part—either shorted or open—will result in either weak or distorted reception or none at all.

ALIGNMENT....If all parts check OK and sensitivity is still low it is probably due to the set being out of alignment. It is necessary to use a reliable test oscillator or signal generator having accurate calibration and positive attenuation.

I F ALIGNMENT 456 K. C.....Open tuning condenser. (High Frequency dial setting). Connect signal generator to grid cap of 1-C-6 tube leaving present cap in place. Use a small condenser .002-.01 in series with signal generator lead wire. Adjust all five trimmers—two in top of each square I F transformer and the one in the top of the round (output) I F transformer. Go over these adjustments several times—it is best to use an output meter to indicate "peak". Reduce the output of the signal generator for final adjustments.

WAVE TRAP With the signal generator still on 456 K. C.—connect to antenna wire of set and adjust wave trap condenser to minimum signal.

The above will usually bring the set back to normal, check operation on stations and if satisfactory do not make any further adjustments.

BROADCAST BAND With the tuning condenser open and the signal generator set on 1735 K. C.—adjust B.C. Oscillator trimmer. Next—close tuning condenser and set signal generator to 540 K.C. adjust variable padding condenser for maximum signal. Adjust B.C. Antenna coil trimmer for maximum at 1400 K.C.

SHORT WAVE This is the most difficult for the service man and unless it is certain that the set does not compare favorably with a similar model under the same conditions of operation—the alignment should be left unchanged. If the service man feels that the short wave operation could be improved—proceed as follows. Connect signal generator to antenna and ground leads using a 300 ohm resistor in series with the antenna lead as a "dummy antenna". Set signal generator at 15,500 K.C. and tune in on the set (wave change switch in Short Wave Position—left). Adjust S.W. oscillator trimmer—see diagram—using a fibre screw driver, move the point of response to the highest frequency setting possible on the dial or near the end of the 19 M. band. Then without moving the tuning dial turn the trimmer screw tighter and you should be able to find a second point of response (the image). Move trimmer back to "loose" position. If the image response cannot be found move the dial and readjust trimmer until it can be heard. Be sure to return to the "loose" or fundamental setting. Next adjust the S.W. antenna coil trimmer for best response refuning the dial at the same time. The low frequency end of the short wave band is fixed by the .004 mica padding condenser and will not change unless this condenser becomes defective.

- CONDENSERS -

C-1	.01	200v.	C-9	.05	200v
C-2	.05	200v.	C-10	.05	200v.
C-3	.004	MICA	C-11	.001	400v.
C-4	.0025	"	C-12	.01	200v
C-5	.00025	"	C-13	8MF	150v
C-6	.25	200v	C-14	.01	200v.
C-7	.5	160v	C-15	.02	400v.
C-8	.25	200v	C-16	.001 - .001	600v.

- RESISTORS -

R-1	100 M	R-6	500 M.
R-2	10 M	R-7	2 MEG.
R-3	50 M	R-8	300 M.
R-4	20 M	R-9	250 M.
R-5	2 M	R-10	1 MEG.

MODEL 780 & 780-B
BATTERY RADIO

PARTS PRICE LIST ON MODEL 780 CORONADO BATTERY TABLE RECEIVER

PRICES ARE SUBJECT TO CHANGE WITHOUT NOTICE

	List
E-17339—Arm—Cable & Markers	$1.00
E-17290—Coil—Antenna	1.80
E-17291—Coil—Oscillator	1.60
E-17422—Control—Volume	1.50
E-17091—Condenser—Mica .....0025 M. W.	.20
E-17092—Condenser—Mica .....0025 M. W.	.30
E-17093—Condenser—Mica .....004 M. W.	.30
E-17071—Condenser—Padder 530 MMF	.50
E-17303—Condenser—Tubular .5 x 200 V.	.20
E-17128—Condenser—Tubular .25 x 200 V.	.20
E-8661 —Condenser—Tubular .05 x 200 V.	.20
E-17335—Condenser—Electrolytic	.60
E-8877 —Condenser—Tubular .01 x 200 V.	.20
E-8584 —Condenser—Tubular .02 x 400 V.	.20
E-8585 —Condenser—Tubular .001 x 600 V.	.20
E-17304—Condenser—Tubular Dual .001 x 800 V.	.30
E-17356—Condenser—Tuning	2.10
E-17043—Bushing—Rubber Chassis Mounting (6)	.50
E-17357—Dial Including Glass	1.80
E-17368—Escutcheon	.50
E-17113—Knob—Tuning	.30
E-17114—Knob—Tone Control, Volume, Wave	.20
E-17371—Plate—Name	.10
E-17105—Resistor—Carbon	.20
E-17309—Resistor—Carbon	.20
E-17310—Resistor—Carbon	.20
E-8601 —Resistor—Carbon	.20
E-8883 —Resistor—Carbon	.20
E-8602 —Resistor—Carbon	.20
E-8886 —Resistor—Carbon	.20
E-8766 —Resistor—Carbon	.20
E-8687 —Resistor Carbon	.20
E-17168—Socket—6-Prong #1-C-6	.20
E-17166—Socket—4-Prong #34	.20
E-17313—Socket—4-Prong #30	.20
E-17314—Socket—6-Prong #19	.20
E-17359—Socket—6-Prong #1-B-5	.20
E-17423—Switch—Tone	.40
E-17364—Switch—Wave Change	.70
E-17321—Transformer—Audio Driver	1.50
E-17292—Transformer—I. F. Input	1.50
E-17293—Transformer—I. F. Output	1.20
E-17334—Trap—Wave	.50
E-17317—Speaker—6½" Magnetic (table model)	3.50
E-17421—Speaker—8" (console)	4.00

©John F. Rider, Publisher

GAMBLE-SKOGMO, INC.

MODEL 778-A
Schematic, Voltage
Socket, Trimmer
Parts List

MODEL 778—SERIES A

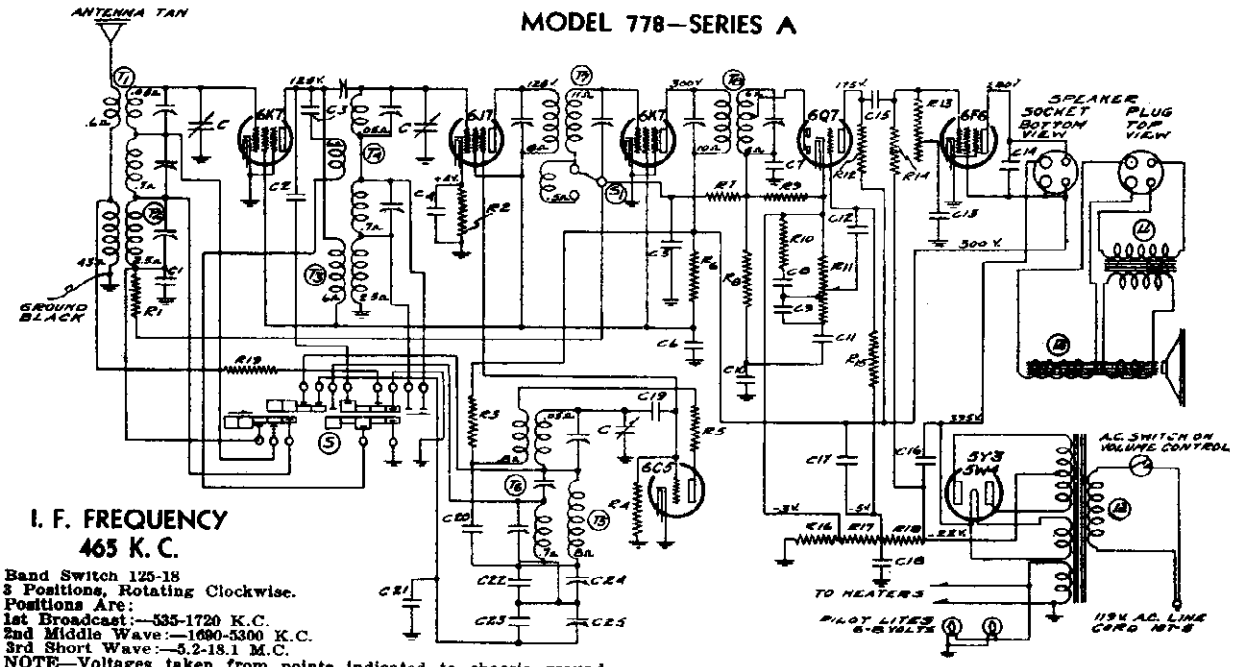

I. F. FREQUENCY
465 K. C.

Band Switch 125-18
3 Positions, Rotating Clockwise.
Positions Are:
1st Broadcast:—535-1720 K.C.
2nd Middle Wave:—1690-5300 K.C.
3rd Short Wave:—5.2-18.1 M.C.
NOTE—Voltages taken from points indicated to chassis ground.
Set not tuned to strong signal.

RESISTORS

No.	Part No.	Description
R1	130-20	100M ohms—1/3 Watt—20%—50 Volt—Carbon
R2	130-43	2500 ohms—1/3 Watt—20%—20 Volt—Carbon
R3	130-77	10M ohms—1 Watt—20%—100 Volt—Carbon
R4	130-12	50M ohms—1/3 Watt—20%—20 Volt—Carbon
R5	130-60	100 ohms—1/3 Watt—20%—10 Volt—Carbon
R6	130-88	10M ohms—2 Watt—20%—Wire Wound
R7	130-3	500M ohms—1/3 Watt—20%—100 Volt—Carbon
R8	130-20	100M ohms—1/3 Watt—20%—50 Volt—Carbon
R9	130-11	250M ohms—1/3 Watt—20%—50 Volt—Carbon
R10	130-22	5000 ohms—1/3 Watt—20%—10 Volt—Carbon
R11	101-47	1 meg ohm—(Volume Control with A.C. Switch)
R12	130-20	100M ohms—1/3 Watt—20%—50 Volt—Carbon
R13	101-38	100M ohms—(Tone Control with Fidelity Switch)
R14	130-3	500M ohms—1/3 Watt—20%—100 Volt—Carbon
R15	130-38	2 meg ohm—1/3 Watt—20%—100 Volt—Carbon
R16	106-27	38 ohms—10% Muter Resistor
R17	106-27	28 ohms—10% Muter Resistor
R18	106-27	220 ohms—10% Muter Resistor
R19	130-27	50 ohms—1/3 Watt—20%—Carbon
		Note: R16, R17, R18 in one unit—part No. 106-27

CONDENSERS

C	102-30	One Section of three gang variable condenser.
C1	100-9	.05—200 Volt—25%
C2	129-59	.0003 Mica—MT—0—5%
C3	129-39	.00005 Mica—MT—0—20%
C4	100-9	.05—200 Volt—25%
C5	100-9	.05—200 volt—25%
C6	100-24B	.25—400 Volt—20%
C7	129-5	.0001 Mica—MT—0—20%
C8	100-9	.05—200 Volt—25%
C9	129-2	.0005 Mica—MT—0—20%
C10	129-60	.00015 Mica—MT—0—20%
C11	100-9	.05—200 Volt—25%
C12	100-11	.01—400 Volt—25%
C13	100-26	.02—400 Volt—25%
C14	100-32	.0005—1000 Volt—20%
C15	100-11	.01—400 Volt—25%
C16	103-8	14 mfd.—400 Volt Electrolytic
C17	103-6	8 mfd.—350 Volt Electrolytic
C18	100-6B	.25—200 Volt—20%
C19	129-31	.000025 Mica—MT—0—15%
C20	100-13	.05—400 Volt—25%
C21	129-54	.003 Mica—MW—W—2½%
C22	129-57	.0005 Mica—MT—0—5%
C23	129-58	.0021 Mica—MW—W—5%
C24	124-18	Padder, 175 mmf. working capacity.
C25	124-18	Padder, 300 mmf. working capacity.
		Note: C24, C25 in one unit—part No. 124-18.

PARTS

T1	111-54	M.W. and S.W. Antenna Coil Assem.
T2	111-55	Broadcast Ant. Coil Assem.
T3	109-30	Broadcast R.F. Coil Assem.
T4	109-29	M.W. and S.W. R.F. Coil Assem.
T5	110-43	Broadcast Osc. Coil Assem.
T6	110-42	M.W. and S.W. Osc. Coil Assem.
T7	108-64	Input I.F. Coil—465 Kc.
T8	108-63	Output I.F. Coil—465 Kc.
L1		Output Trans. (on speaker).
*L2	114-36	8" Speaker (Field Resistance 1250 Ohms)
L3	104-27	Power Transformer (50-60 Cycle)
S	125-18	Band Switch
S1	101-38	Fidelity Switch on Tone Control

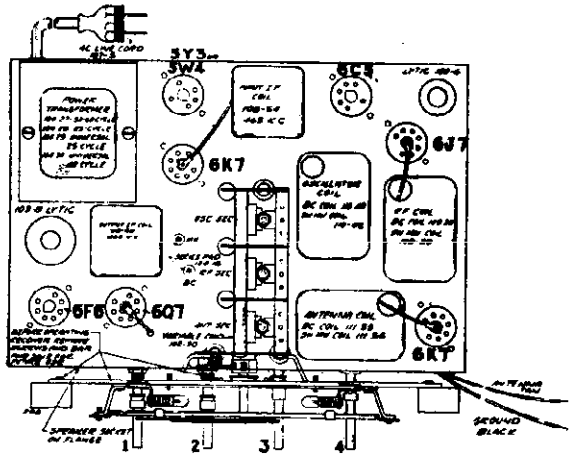

FIG. 3—TOP VIEW—MODEL 778—SERIES A

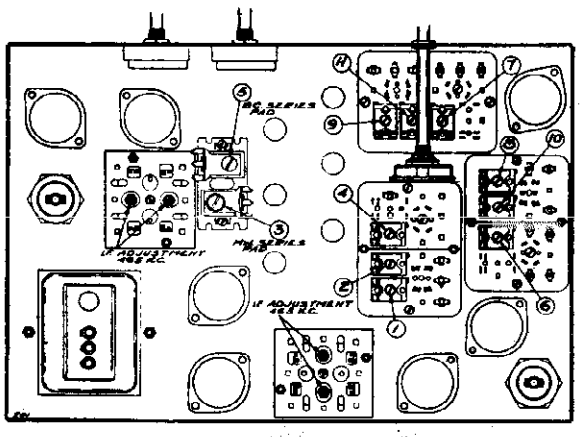

FIG. 1—BOTTOM VIEW SHOWING TRIMMERS

©John F. Rider, Publisher

MODEL 778-A
Alignment

GAMBLE-SKOGMO, INC.

NEVER ATTEMPT TO REPLACE FUSE WITHOUT FIRST DISCONNECTING POWER.

NEVER REPLACE WITH FUSE OTHER THAN 2 AMPERE RATING.

Voltage taken from different points of circuit to chassis are measured with volume control full on, all tubes in their sockets and speaker connected, with a volt meter having a resistance of 1000 ohms per volt. These voltages are clearly indicated on the circuit diagram.

IN ORDER TO PREVENT SIGNAL FROM ACTING UPON AVC AND AFFECTING ACCURACY OF VOLTAGE MEASUREMENTS, AERIAL AND GROUND LEADS SHOULD BE SHORT CIRCUITED WHILE MAKING MEASUREMENTS.

All voltages are to be measured with 119 volts on the primary of the power transformer.

Resistance of coils and transformer windings are indicated in ohms on schematic circuit diagrams.

To check for open by-pass condenser, shunt each condenser with another condenser of the same capacity and voltage rating, which is known to be good, until the defective unit is located.

Excessive hum, stuttering, low volume and a reduction in all D.C. voltages is usually caused by a shorted electrolytic condenser, open by-pass condensers frequently cause oscillation and distorted tone.

ALIGNING INSTRUCTIONS

Dummy Antennas

The following dummy antennas are used in aligning and are referred to in the following alignment instructions as "Dummy 1", "Dummy 2" and "Dummy 3".

Dummy 1: (I.F.)—Consists of a .1 mfd. condenser connected in series with the external oscillator.

Dummy 2: (Broadcast)—Consists of a 200 mmfd. condenser and a 20 ohm resistor connected in series with each other and in series with the external oscillator.

Dummy 3: (Intermediate and Short Wave)—Consists of a .1 mfd. condenser and a 400 ohm resistor connected in series with each other and in series with the external oscillator.

Resonance Indicator:

Use as a resonance indicator an output meter connected across the primary of the speaker input transformer or by means of an adapter between the plate and screen terminals of the type 6F8 output tube. Maximum deflection of the meter indicates resonance. Use only enough signal to get a readily readable output. A low range output meter or the low scale of a multi-range meter should be used.

CAUTION:

No aligning adjustments should be attempted without first thoroughly checking over all other possible causes of trouble, such as poor installations, open or grounded antenna systems, low line voltages, defective tubes, condensers and resistors. In order to properly align this chassis, an oscillator (generator) is absolutely necessary. No aligning adjustments should be attempted with the chassis in the cabinet. To remove the knobs, pull them off and to take the chassis out of the cabinet, remove the four bolts by which it is fastened.

ALIGNING I.F. TRANSFORMERS (455 K.C.)

Part No. 108-63 Output I.F. Transformer
Part No. 108-64 Input I.F. Transformer

CAUTION: Three I.F. transformers have two adjustments, both of which are accessible from the underside of chassis (see bottom view).

1. With volume control full on, (the extreme right of its rotation), the wave changing switch in the broadcast position, (extreme left of its rotation), the tone control on "Hi" part of the sharp position (as much right rotation as possible without operating the Hi Fidelity switch), and with the variable condenser set to approximately 1400 kilocycles, make the following adjustments:

(a) Connect external oscillator set at 455 kilocycles, in series with "Dummy 1", to the control grid cap of the type 6K7 tube, located between the two I.F. transformers, and adjust the output I.F. transformer (108-63) to resonance.

(b) With "Dummy 1" still connected, move oscillator output clip from grid of 6K7 to grid cap to 6J7 and adjust input I.F. transformer (108-64) to resonance.

(c) With oscillator still connected to 6J7, re-adjust output I.F. transformer if necessary.

ALIGNMENT PROCEDURE

The following adjustments to be made after the I.F.'s have been aligned as explained above.

BROADCAST BAND ALIGNMENT:

1. With wave changing switch in the broadcast position extreme left of its rotation, and with external oscillator set at 600 kilocycles and connected in series with "Dummy 2" to the fan antenna and black ground lead, make the following adjustments:

(a) Adjust broadcast series pad (adjustment number 5) to resonance with oscillator. Keep set in tune with oscillator by slowly rocking to and fro the variable condenser until maximum output is obtained. Note: This adjustment is accessible from the top of the chassis and is located between the variable condenser and the 108-63 output I.F. transformer. See top view, Fig. 2.

(b) Re-set external oscillator to 1400 K.C., move dial pointer to 1400 K.C. and adjust oscillator (adjustment number 4), R.F. (adjustment number 6) and antenna (adjustment number 7) to resonance. See bottom view for location of these adjustments, Fig. 1.

(c) Repeat adjustments "a" and "b" until sensitivity is at its maximum.

NOTE: IT IS EXTREMELY NECESSARY IN MAKING ALL OF THESE ADJUSTMENTS THAT THE FUNDAMENTAL OSCILLATOR SIGNAL BE TUNED IN AND NOT THE IMAGE FREQUENCY WHICH WILL FALL BELOW THE FUNDAMENTAL.

SHORT WAVE BAND ALIGNMENT:

1. With wave changing switch in the short wave position extreme right of its rotation, and with external oscillator set at 17 megacycles and connected in series with "Dummy 3" to the fan antenna and black ground lead, make the following adjustments:

(a) Move dial pointer to 17 megacycles and adjust short wave oscillator (adjustment number 1), short wave R.F. (adjustment number 8) and short wave antenna (adjustment number 9) to resonance.

(b) Re-set external oscillator to 6 megacycles and pick up signal by rotating variable condenser and check for sensitivity.

INTERMEDIATE BAND ALIGNMENT:

1. With wave changing switch in the intermediate wave position, center of its rotation, and with external oscillator set at 1800 K.C. and connected in series with "Dummy 3" to the fan antenna and black ground lead, make the following adjustments:

(a) Rotate variable condenser to approximately 1800 K.C. tune in oscillator signal and adjust M.W. series pad (adjustment number 3) (see top view) to resonance.

Slowly rock condenser to and fro while making this adjustment to be sure maximum output is obtained.

(b) Set external oscillator at 5 M.C., rotate condenser, pick up signal and adjust intermediate wave R.F. (adjustment number 10), intermediate wave antenna (adjustment number 11) and intermediate wave oscillator (adjustment number 2) to resonance.

(c) Re-check broadcast alignment and if it is found necessary to re-adjust either R.F. or antenna trimmers, repeat the 17 M.C. short wave and 5 M.C. intermediate wave adjustments.

DESCRIPTION

The tube complement of this chassis is as follows:

1—Type 6K7 Remote cut-off pentode R.F. amplifier
1—Type 6J7—pentode first detector.
1—Type 6C5 Oscillator
1—Type 6K7 Remote cut-off pentode I.F. amplifier (455 K.C.)
1—Type 6Q7 duplex diode pentode second detector, A.V.C. and audio.
1—Type 6F8—pentode output amplifier.
1—Type 5Y3 or 5W4—high vacuum rectifier.

Transformers are available and chassis are sometimes equipped with universal transformers for operation on 40 and 60 cycles and with primary taps for 105, 125, 150, 220 and 250 volts (see instructions) and also sometimes equipped with 25 cycle transformers with 105-115 volt or 220 volt primaries, not universal.

SERVICE NOTES

NOTE: Chassis with serial numbers from 6C229300 to 6D242726 were equipped with a fuse in the primary circuit of the power transformer and supplied with a type 5Z4 rectifier tube.

This fuse is made accessible for replacement by removing fuse cover located on back flange of chassis, replace only with a 2 ampere fuse. If replacement fuse blows out, check tubes, (particularly 5Z4 rectifier) circuit, repair or replace defective tubes or parts.

MODEL 778 - Series A

7-Tube A. C. All Wave

3-Band High Fidelity Superheterodyne Receiver

©John F. Rider, Publisher

MODEL 1050
Schematic

GAMBLE-SKOGMO, INC.

MODEL 1050
Schematic
Voltage

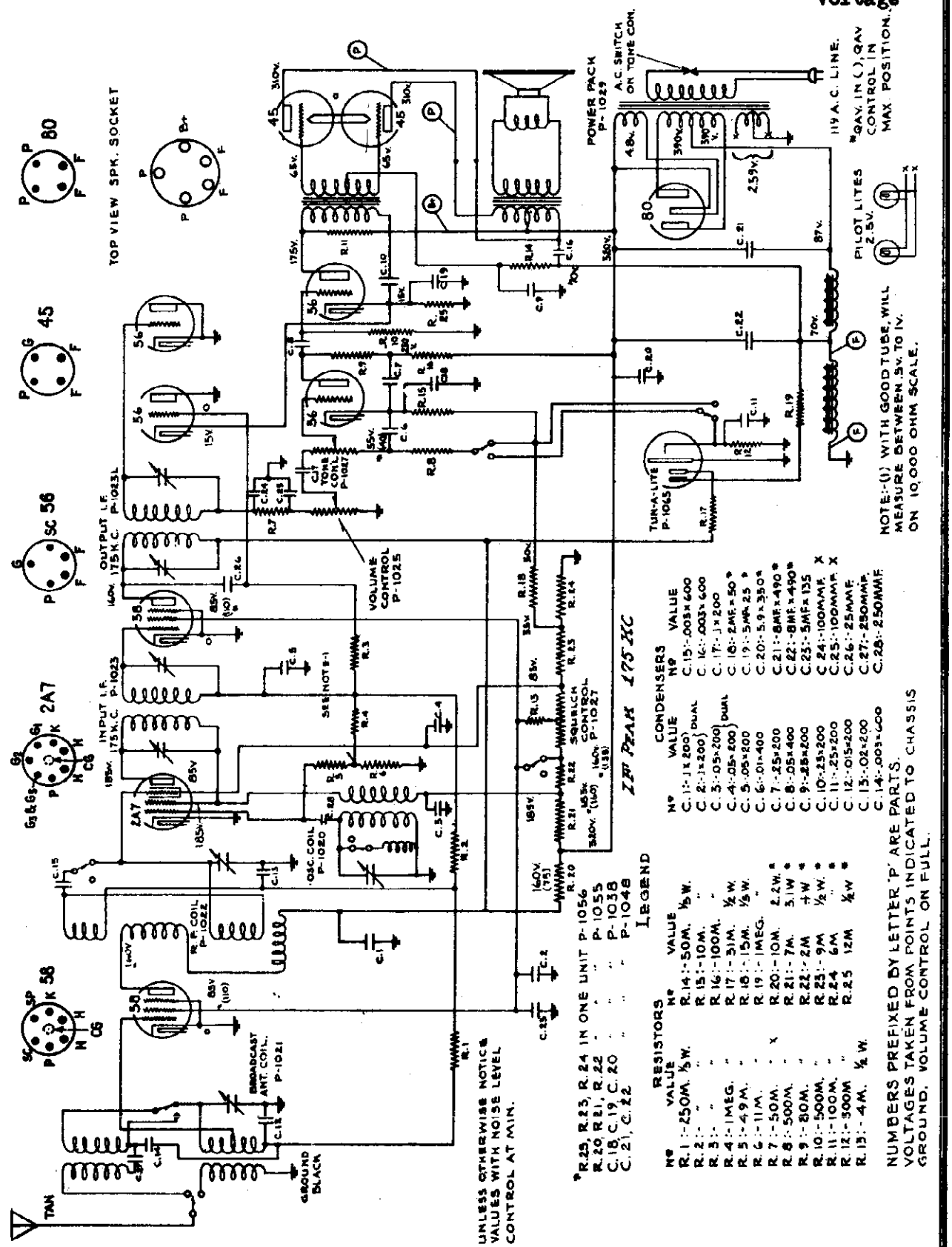

©John F. Rider, Publisher

MODEL 1050
Socket
Alignment
Notes

GAMBLE-SKOGMO, INC.

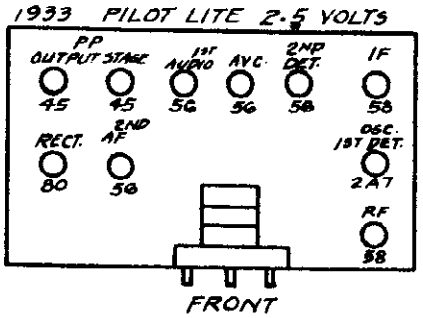

SERVICE MANUAL TEN TUBE SUPERHETERODYNE WITH A.V.C., SQUELCH AND SHORT WAVE

105-115 Volts Alternating Current, 50-60 Cycles, 105 Watts. 530-1720 Kilocycles - 1700-4500 Kilocycles.

SERVICE NOTES

Should it be at any time necessary to rebalance this set, the correct proceedure is as follows:

1. Volume and tone controls on full during all alignment.
2. Squelch switch in "no squelch" position (counter-clockwise (left) rotation) during all alignment.
3. Adjust variable squelch control on rear flange of chassis to maximum counter-clockwise (left) position.
4. Set variable condenser in minimum capacity position (plates open) at the start of all aligning.

I.F. ALIGNMENT

The intermediate frequency of model 1050 is 175 kilocycles, and is aligned as follows:

1. Connect oscillator (set at 175 kilocycles) to I.F. grid (second 58 tube) and adjust both trimmers of second I.F. transformer (underneath chassis) to resonance (maximum deflection on an output meter connected across the primary of the speaker input transformer).
2. Connect oscillator output to converter grid (2A7 tube) and adjust both trimmers of first I.F. transformer to resonance. Under no conditions touch the trimmers of the second I.F. transformer after adjusting them (see No. 1).

The four trimmers of the two I.F. transformers are all adjusted from the bottom of the chassis (one nut and one screw adjustment on each I.F. transformer trimmer).

BROADCAST BAND ALIGNMENT

Wave changing switch in clockwise (right) position.

1. Connect an oscillator in series with a 200 mmfd. condenser to the Tan (antenna) lead and Black (ground) lead. With the oscillator set at 1720 kilocycles and the variable condenser at its minimum position (extreme right of its rotation), adjust trimmer of oscillator (rear) section to resonance.
2. Change oscillator to 1400 kilocycles, rotate variable to this frequency and adjust R.F. and antenna trimmers (center and front trimmers respectively) to resonance. Do not touch the oscillator trimmer.
3. Check tracking at the following points only: 1200-1000-800-600-534 kilocycles. NOTE: This receiver will be slightly out of track at 534 kilocycles - do not bend plates in an attempt to track it at this frequency. Rotor plates of condensers should not be bent, except if absolutely necessary, and then only on the center and front sections.

SHORT WAVE BAND ALIGNMENT

Wave changing switch in counter-clockwise (left) position.

1. The frequency range of this short wave band is approximately 1700 to 4500 kilocycles.
2. Peak short wave antenna coil to resonance with oscillator set at 1720 kilocycles by slipping primary.
3. Check for sensitivity at the following frequencies only: 1720 and 3700 kilocycles - under no conditions touch trimmers or plates of variable condenser while checking short wave band.

Tun-a-lite. VISUAL TUNING CHECK

The visual tuning indigator (tun-a-lite tube) is mounted horizontally on the front of the variable condenser assembly and its operation in this respect can be checked as follows:

1. Normally there will be a small continuous glow in the base of the tube when no signal is being received.
2. With a strong oscillator input at 1000 kilocycles, the tun-a-lite should glow to approximately the end of the bulb, varying slightly with different tun-a-lites. If the glow "travel" is short, or none at all, remove the tun-a-lite tube and check its socket connections and contacts. If the tube still fails to indicate satisfactorily, replace the tube.

SQUELCH CHECK

The tun-a-lite tube is also used for noise suppression between stations. Its operation can be checked as follows:

1. Squelch switch adjusted to squelch (clockwise (right) position).
2. Disconnect oscillator, connect antenna, tune set to a position where no signal is received. Noise level at this position should be quite high.
3. Rotate set screw of squelch control on rear flange of chassis, and at some point the noise should cease and the set sound "dead", indicating that the tun-a-lite is squelching and eliminating between station noise.

NOTES: For failure to operate over both bands, check 2A7 tube and connections to and contacts of wave changing switch.

Condenser shaft to which pointer is attached is rotated by means of a celluloid dial attached to the condenser shaft and a bronze friction drive assembly, to which is attached the selector knob. Should this drive ever slip or become rough, it can be adjusted for smooth operation by sliding the bronze washer drive assembly either closer to the variable shaft or farther away from it in the slot in which it is mounted, to insure smooth operation.

©John F. Rider, Publisher

GAMBLE-SKOGMO, INC.

MODEL 2078-D
Schematic
Socket

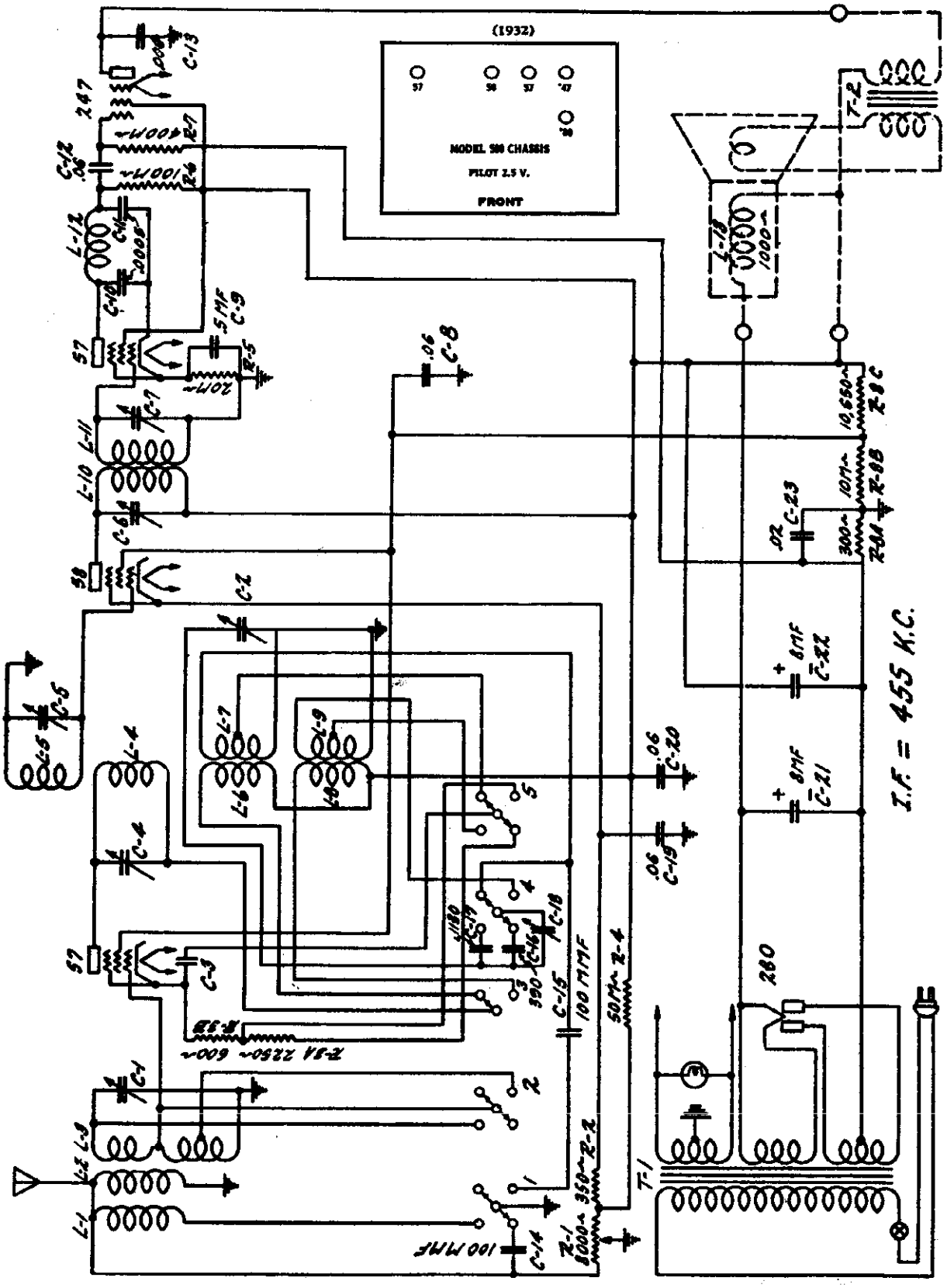

©John F. Rider, Publisher

"CORONADO" Model 2078D

Dual-Wave Super-Heterodyne

ALIGNMENT

The necessity for realignment of the receiver circuits will usually be indicated by a lack of sensitivity accompanied by poor selectivity, but realignment should not be attempted until all other causes for this same condition, such as defective tubes, poor antenna installation, partially shorted condensers or loose connections at some point in the chassis, have been investigated.

Aligning Intermediate Condensers — Place the receiver in operation with the band selector switch in the broadcast position. Connect the output lead from the signal generator to the control grid connection of the 57 first detector tube and place the signal generator in operation at 455 K. C.

The oscillator coil must be shorted out by grounding the lead from the tap on the secondary. This is the white lead which comes through the porcelain base of the oscillator and I. F. assembly. This lead terminates at a lug on a vertically mounted bakelite terminal strip. Connect the jumper from this lug to the ground.

Then set the signal generator for a signal of 600 K. C. and turn the tuning condenser rotor until the output is at maximum. The next step is to adjust the oscillator 600 K. C. trimmer condenser. The adjusting screw for this condenser is between the tuning condenser and intermediate frequency shield on top of the chassis. To correctly adjust this oscillator 600 K. C. trimmer it will be necessary to turn the screw to several different positions using a non-metalic screw driver. At every position of this adjusting screw turn the tuning condenser rotor until maximum output is obtained. For each position of the adjusting screw there will be a maximum output and the correct position of the adjusting screw is the setting at which the deflection of the output indicating meter is the greatest.

Next set the signal generator again for a 1400 K. C. signal and check the adjustment of the tuning condenser trimmers at this frequency for the maximum output. Then set the signal generator for a signal of 1000 K. C. and turn the tuning condenser rotor until the output indicating meter shows maximum deflection. Then bend the slotted rotor plate sections of each tuning condenser bank which are last in mesh, in or out until maximum output is obtained. Tune in a signal at 750 K. C. and then at 600 K. C. and follow the same procedure, bending the rotor plate sections last in mesh until maximum output is obtained. Do not change the setting of the oscillator 600 K. C. trimmer in any way after it has once been set as indicated above.

After the foregoing adjustments are carefully made with the receiver in operation in the broadcast band, the same adjustments will be correct for operation of the receiver in the short wave band and no further adjustments are necessary to obtain maximum efficiency of operation on short wave signals.

The intermediate condenser adjusting screws on the first I. F. transformer are reached from the bottom of the chassis. The tuning condensers of this transformer are mounted on the porcelain base of the oscillator I. F. assembly and the adjusting screws protrude through this base. The intermediate condenser adjustments on the second I. F. transformer mounted on top of the chassis are both accessible from above the chassis and adjustment is made by means of the screw and nut on the top of the I. F. transformer. Turning the screw varies the capacity of the I. F. secondary trimmer and turning the nut changes the capacity of the I. F. primary trimmer. Adjust all four intermediate condensers until maximum output is obtained on the output meter. After all four have been adjusted the first time go over them again and check the setting for maximum output.

Aligning R. F. and Oscillator Condensers— The R. F. and oscillator condensers are adjusted with the receiver in operation in the broadcast band and the signal input from the signal generator should be made to the antenna post. Adjust the signal generator for a signal of exactly 1400 K. C. Then turn the tuning condenser rotor until the pointer is at exactly 1400 on the dial scale. Then adjust the two trimmers on the tuning condenser for maximum output adjusting the oscillator trimmer first (trimmer nearest front of chassis). Turn the screws up or down until greatest deflection on output indicating meter is obtained.

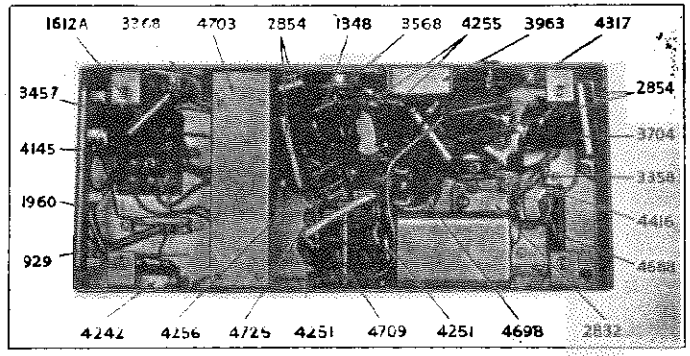

PRICES ARE SUBJECT TO CHANGE WITHOUT NOTICE

Part No.	DESCRIPTION	No. Used in Set	List Price Each
4257	Bakelite Knob, Large	2	.30
4258	Bakelite Knob, Small	1	.20
4267	Speaker Socket — 4 Contact	1	.25
4282	Pilot Light Socket with Leads	1	.20
4317	Resistor, 20,000 Ohm Carbon, 1 Watt	1	.40
4370	Tube Shield Assembly	1	.40
4416	Horizontal Insulated Terminal	1	.02
4558	Resistor, 800 - 2250 Ohm Candohm	1	.35
4698	Oscillator Coil, Short Wave	1	.50
4703	Dual 8 Mfd. Filter Condenser with Mounting Bracket and Leads	1	3.50
4704	Oscillator — I. F. Assembly Complete with Shield Can	1	2.30
4705	Antenna Transformer	1	1.50
4709	Band Selector Switch Assembly with 100 Mmf., 390 Mmf., 1130 Mmf. Condenser, and all wires	1	4.50
4710	Tuning Condenser Assembly	1	4.50
4712	Drive Disc and Dial Chart	1	.50
4725	Condenser, 1130 Mmf.	1	.30
4803	2nd I. F. Transformer complete with Shield Can	1	1.50
115	Pilot Light Lamp	1	$ .25
678	Ground Binding Post	1	.15
701	Tube Socket — 280	1	.35
861	Attachment Cord and Plug	1	.65
929	Resistor, 50,000 Ohm Carbon, 1 Watt	1	.45
962	Grid Cap Only	3	.02
1348	Resistor, 100,000 Ohm Carbon, 1 Watt	1	.50
1612A	Condenser, .006 Mfd., 400 Volt	1	.50
1960	Resistor, 350 Ohm, Candohm	1	.30
2238	Antenna Binding Post	1	.20
2767	Tube Socket — 247	1	.35
2832	Trimmer Condenser, 600 K. C.	1	.40
2854	Condenser, .06 Mfd., 400 Volt	4	.40
3358	Vertical Insulated Terminal	4	.04
3368	Resistor, 400,000 Ohm Carbon, .1 Watt	1	.40
3457	Condenser, .02 Mfd., 500 Volt	1	.30
3568	Detector Plate Choke Assembly	1	.50
3704	Condenser, .002 Mfd., 500 Volt	1	.40
3963	Condenser, .5 Mfd. Bypass	1	.70
4110	Power Transformer, 105 - 125 Volts, 60 cycles	1	6.00
4111	Power Transformer, 105 - 125 Volts, 25 cycles	1	8.00
4117	Tube Socket — 57	2	.25
4118	Tube Socket — 58	1	.25
4145	Resistor, 800 - 10,000 - 10,650 Ohm Candohm	1	.80
4159	Tube Shield Cover Plate	1	.05
4165	Dial Drive Assembly	1	.25
4242	Volume Control, 0 - 8000 Ohm with Power Switch	1	1.80
4251	Condenser, 100 Mmf.	2	.25
4255	Condenser, 500 Mmf.	2	.25
4256	Condenser, 390 Mmf.	1	.30
4265	6" Electrodynamic Speaker with Input Transformer	1	7.50
4734	Cone Head Assembly for 4265 Speaker	1	2.75
4735	Field Coil for 4265 Speaker	1	2.25
4736	Input Transformer for 4265 Speaker	1	2.25
4737	Speaker Plug, 4 Prong	1	.30

© John F Rider Publisher

MODEL 2070—D
Voltage, Data
Resistance

Volume Control at Maximum—Switch in Broadcast Position

REFERENCE POINT—CHASSIS

Measurement Point	Correct Reading (Ohms)	Incorrect Reading (Ohms)	Defect
Antenna Post	21	2020 0	Open L-2 Shorted C-14
1st Detector Control Grid	1	1.9 Open	Shorted C-1 or Trimmer Open L-8
1st Detector Cathode	2,200	Open 4	Open R-3 Shorted C-3
1st Detector Screen Grid	8,000	0 10,000	Shorted C-8 Open R-8C
1st Detector Plate	14,000	13.5 50,000	Shorted C-20 Open R-8B or R-8C
I. F. Control Grid	22	Open 0	Open L-4 Shorted C-5
I. F. Cathode	250	Open 0	Open R-2 Shorted C-19
I. F. Plate	14,000	20 50,000 Open	Shorted C-20 Open R-8B or R-8C Open R-4 or L-10
2nd Detector Control Grid	20	0 Open	Shorted C-7 Open L-11
2nd Detector Cathode	20,000	0 Open	Shorted C-9 Open R-5
2nd Detector Screen Grid	14,000	Open 0 300 1,200	Open R-4 or R-8 Shorted C-20 Shorted C-22 Shorted C-21
2nd Detector Plate	114,000	Open 150,000 120,000 20,000	Open R-6 Open R-3 Open R-4 Shorted C-10 or C-11
Audio Control Grid	400,000	Open	Open R-7 or R-8A
Audio Screen Grid	14,000	20,000 0 50,000	Open R-4 Shorted C-20 Open R-8B or R-8C
Audio Plate	14,000	0 50,000 Open	Shorted C-13 Open R-8B or R-8C Open Pri. T-2
Rectifier Either Plate	600	300 Open	Shorted C-23 Open Secondary T-1 or Open R-8A
Rectifier Either Filament	14,000	Open 700 1,300	Open L-13 or R-8 Shorted C-21 Shorted C-22

—VOLTAGES AT SOCKETS

LINE VOLTAGE 115—VOLUME CONTROL AT MAXIMUM

Type of Tube	*Position of Tube*	*Function*	*"A" Volts*	*"B" Volts*	*Control Grid "C" Volts*	*Screen Grid Volts*	*Screen Grid Current M A*	*Cathode Volts*	*Plate M A*	*Grid Test M A*
57	1	1st Det. & Osc.	2.15	245	4.5-5.9(1)	100	.6	4.5-5.9(1)	.95	2.0
58	2	I. F.	2.15	240	3.0	100	1.5	3.0	6.6	10.4
57	3	2nd Det.	2.15	166	9.0	235	.1	9.0	.35	.45
247	4	Audio	2.15	215	17.0(2)	240	8.0		30.	48.
280	5	Rect.	6.6						30. Per Plate	

(1) Varies with frequency setting of dial approximately as shown.
(2) Measured across 300 ohm section of voltage divider resistor.

REFERENCE POINT—B (AUDIO SCREEN CONTACT)

Measurement Point	Correct Reading (Ohms)	Incorrect Reading (Ohms)	Defect
1st Detector Screen Grid	10,550	Open	Open R-8C
1st Detector Plate	18.5	2 Open	Shorted C-4 Open L-4 or L-6
I. F. Plate	20	Open 0	Open L-10 Shorted C-6
2nd Detector Screen Grid	0	Open	Open Connection
2nd Detector Plate	100,570	Open	Open R-6 or L-12
Audio Plate	700	Open	Open Pri. T-2
Rectifier Plate	14,000	Open	Open R-8 or Sec. T-1
Rectifier Filament	1,000	Open	Open L-13

MISCELLANEOUS

2nd Detector Plate to Audio Grid	Open	70	Shorted C-12
2nd Detector Plate to 2nd Detector Cathode	170,000	0 70	Shorted C-10 Shorted C-11
Rectifier Plate to Plate	600	Open	Open Secondary T-1
Rectifier Filament to Filament	Very Low	Open	Open Fil Winding T-1
Between Filament Contacts of Other Sockets	Very Low	Open	Open Heater Winding
Across A. C. Plug	9	Open	Open Pri. T-1
Across Secondary T-2 (Unsolder Voice Coil Lead)	.8	Open	Open Sec. T-2
Across Voice Coil	1.8	Open	Open Voice Coil
Across C-15	Open	0	Shorted C-15
Chassis to Common Connection C-16 and C-17	Open	0	Shorted C-2 or Trimmer
Stator C-2 to Cathode 1st Detector	Open	2,554	Shorted C-16 or C-18

BAND SELECTOR SWITCH IN SHORT WAVE POSITION

Chassis to Antenna Binding Post	3.5	4 21	Open L-2 Open L-1
Chassis to Control Grid 1st Detector	1.6	0	Shorted C-1 or Trimmer
Chassis to Cathode 1st Detector	600	Open 8	Open R-3H or L-9 Shorted C-3
Audio Screen to 1st Detector Plate	18	Very Low Open	Shorted C-4 Open L-4 or L-6

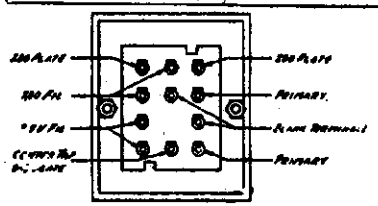

Power Transformer Terminals

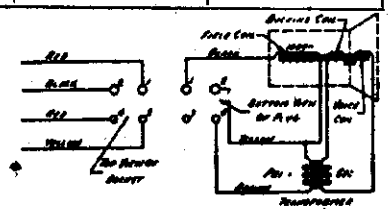

Electrodynamic Speaker and Connections.

©John F. Rider, Publisher

MODEL 2090
Schematic
Notes

GAMBLE-SKOGMO, INC.

CONNECT A TO A AND B TO B FOR SINGLE SPEAKER.
CONNECT A' TO A, B' TO B, C TO C AND D TO D FOR DUAL SPEAKERS.

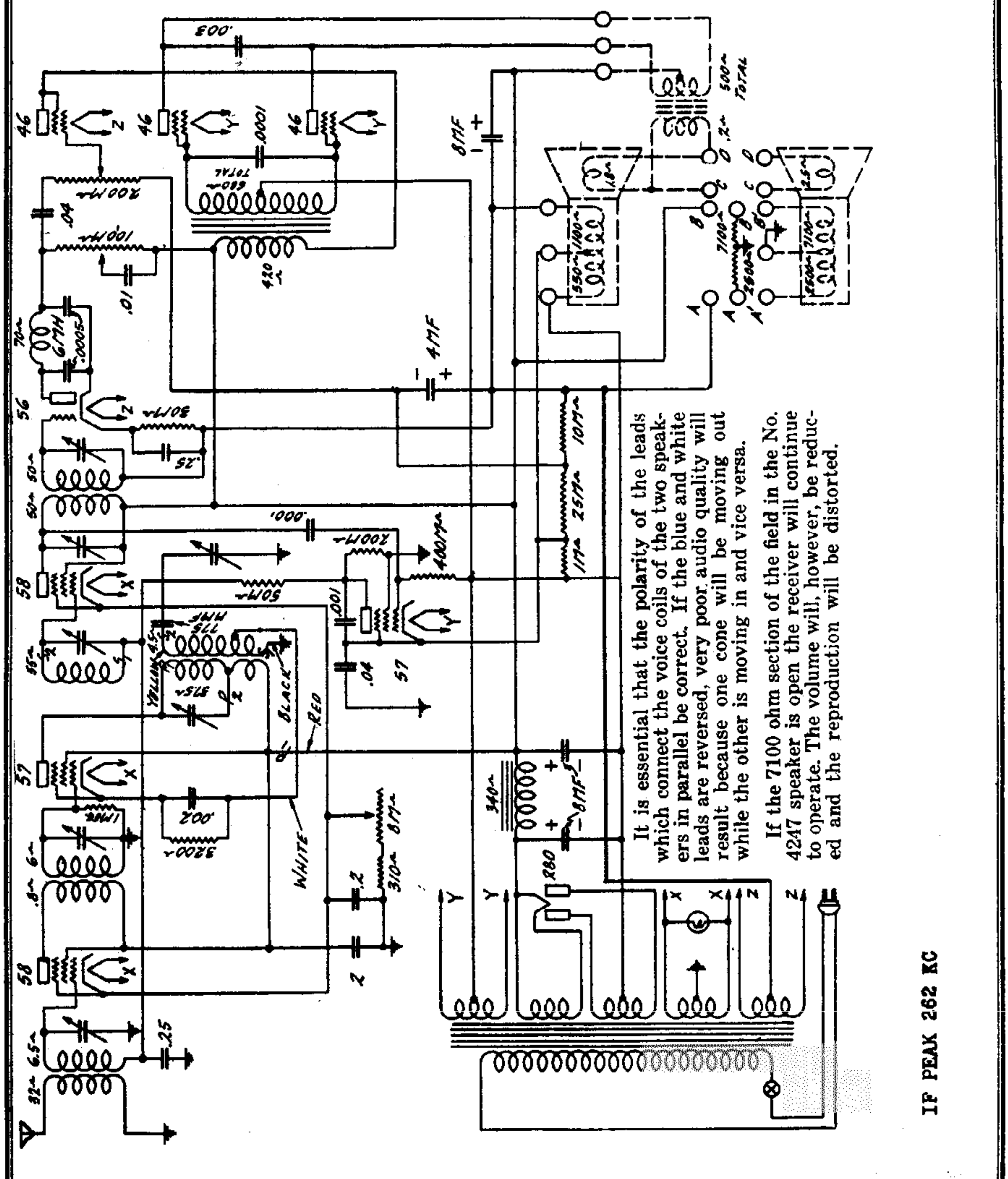

©John F. Rider, Publisher

©John F. Rider, Publisher

"COLORADO" Model 2090

Super-Heterodyne Receivers

No. 900 Chassis

CIRCUIT

The complete circuit consists of an R.F. amplifier, an Oscillator-1st detector unit in which the local signal is generated and combined with the R.F. signal to form the intermediate or beat frequency, the I.F. amplifier, the 2nd detector or demodulator, the AVC and "Q" Control, the audio stages, and the power system from which the required voltages are obtained.

An R.F. amplifier or similar circuit is necessary because of the tendency of the Super-Heterodyne towards image or double frequency response. Image response is due to the fact that two different R.F. signals can be combined with the oscillator signal at the same time to form the intermediate or beat frequency. One of the R.F. signals is above the oscillator signal by an amount equal to the intermediate frequency and the other R.F. signal is below the oscillator signal by the same amount.

In the No. 900 chassis is included the Quiet Automatic Volume Control (Q.A.V.C.) This is a sensitivity control working in conjunction with the AVC tube to provide quiet operation of the receiver whether or not it is tuned to a station. Control of the receiver sensitivity is obtained by means of a variable biasing resistor in the cathode circuit of the R.F. and I.F. tubes making it possible to adjust the sensitivity of the receiver to a point below the noise level prevailing at the point of reception.

A type 56 tube is used as the 2nd detector or demodulator tube. This detector is of the bias type, the bias voltage being obtained from the drop established by the plate current flowing through the 30,000 ohm resistor in the cathode circuit of the tube. The grid return of this tube is brought to the low potential end of the biasing resistor.

A low-pass filter consisting of a 6-millihenry choke and two 500 Mmf. condensers is placed in the plate circuit of the 2nd detector to prevent I.F. voltage from being applied to the grid of the 46 1st audio or "Driver" tube. This filter offers a very high impedance to intermediate frequency but allows audio frequency to pass readily.

The 2nd detector is coupled to the driver stage by means of resistance coupling, the 100,000 ohm tone blender resistor providing the necessary impedance so that the audio voltage is developed across it and impressed upon the grid of the 46 driver tube through the .04 Mfd. coupling condenser.

A .01 Mfd. condenser is connected between the lower end of the tone blender resistor and the movable arm. As the movable arm is moved so that the .01 Mfd. condenser shunts more of the resistor, the impedance of the plate circuit to high audio frequencies is lowered and less high frequency voltage is impressed upon the grid of the driver tube. The tonal output of the receiver is varied accordingly.

A 200,000 ohm variable resistor is connected as a potentiometer in the grid circuit of the 46 driver tube and serves to control the volume of the receiver. One end of this resistor is connected to the .04 Mfd. coupling condenser and the other end to the source of the grid bias voltage for the 46 driver tube. The grid of this tube is connected to the movable arm. As the position of the movable arm is changed, the A.F. voltage impressed on the grid of the 46 driver tube is varied, thus controlling the volume.

The outer grid of the 46 tube is connected to the plate and the tube functions as a low impedance audio amplifier. Bias voltage for this tube is obtained by using a portion of the voltage drop across the 1100 ohm section of the speaker field. The drop across this section is 45 volts and by means of a voltage dividing system consisting of a 10,000 ohm resistor and a 25,000 ohm resistor in series across the 1100 ohm section, the proper bias voltage of 19 volts is applied to the inner grid of the tube, through the 200,000 ohm volume control resistor. The grid biasing system is bypassed by a 4 mfd. dry electrolytic condenser which completes the audio circuit to the tube and avoids the degenerative effect which would be present if the audio frequencies were forced to flow through the biasing system.

The driver stage is transformer coupled to the two 46 tubes which are used in the Class "B" output amplifier. Owing to the fact that current flows in the grid circuits of these tubes during the time the positive half of the cycle is applied to the dual-grid connection, it is necessary to utilize a specially designed audio transformer with a low impedance secondary. If this is not done the audio wave applied to the dual-grids of the tubes will be distorted due to voltage drop in the transformer secondary winding caused by the grid current.

No grid bias voltage is applied to the dual-grids of the 46 tubes as the plate impedance is very high due to the dual-grid connection. The plate current is practically at cut-off, being only 5 MA at no signal.

A 8000 Mmf. condenser is connected between the plates of these tubes and acts as a bypass for high audio frequency harmonics.

A type 57 tube is used as an automatic volume control in this chassis. Grid bias voltage for this tube is obtained by using the voltage drop across the 550 ohm section of the speaker field which is shunted by a 1000 ohm resistor. The plate voltage is developed across the 1100 ohm section of the speaker field and the 7100 ohm section of the Candohm shunt resistor. The AVC controls the signal strength after it has been picked up by the antenna by varying the bias voltage on the 58 R.F. and I.F. tubes. The grid circuits of the tubes are connected through a 50,000 ohm resistor to the plate of the AVC tube. The cathodes of the R.F. and I.F. tubes are connected to ground through the "Q" control and 310 ohm biasing resistor. The 200,000 ohm resistor in the plate circuit of the 57 AVC tube is also connected to ground and when a signal of sufficient magnitude to overcome the initial D.C. bias on the AVC tube is applied to its control grid through the 100 Mmf. coupling condenser, current will flow in the plate circuit, establishing a voltage drop across the 200,000 ohm resistor. This voltage adds to the bias voltage already applied to the grids of the R.F. and I.F. tubes by the drop across the "Q" control and 310 ohm resistor and decreases the sensitivity of the receiver in proportion to the strength of the signal being received.

Previous Super-Heterodyne receivers operated noisily when tuning from one station to another. This was due to the action of the AVC tube in allowing the receiver to operate at maximum sensitivity when no station signal was applied to the receiver. As the Super-Heterodyne is a very sensitive receiver its operation is naturally noisy under such conditions. In the No. 900 chassis a variable resistor is placed in series with the fixed biasing resistor in the cathode circuit of the R.F. and I.F. tubes. This makes possible the manual variation of the sensitivity of the receiver. In practice this 8,000 ohm resistor or "Q" control is adjusted to the point where local interference or static is reduced to an unobjectionable minimum when the receiver is not tuned to a station. This adjustment will make stations which are below the noise level inaudible and may introduce slight fading in the reception of stations whose signal strength goes below the noise level at times but in any case such stations cannot be received with any degree of satisfaction as their signal strength is no greater than the noise level prevailing at the point of reception.

The power system consists of the conventional power transformer, full wave rectifier, filter choke and filter condensers. The speaker field serves as an additional choke as well as a part of the voltage dividing system. The voltage dividing system which provides proper plate, and screen voltages for the different tubes is completed through a 9600 ohm resistor which is tapped at 2500 ohms.

The R.F. amplifier reduces this form of interference by selecting and amplifying the desired signal, at the same time attenuating unwanted signals. Additional freedom from image response is obtained by the selection of a high intermediate frequency.

The R.F. amplifier is a stage of tuned radio frequency coupled to the antenna and ground by a high impedance primary coil. The primary winding is resonant to a frequency below the broadcast band permitting the use of varying antenna lengths without disturbing the alignment. The secondary of this transformer is tuned by the first section of the three-gang tuning condenser. The 2nd R.F. or detector transformer which couples the plate circuit of the 58 R.F. tube to the grid circuit of the 57 1st detector is also inductively coupled. The secondary of this transformer is tuned by the second section of the three-gang tuning condenser.

The grid bias voltage for the 58 R.F. amplifier is variable and depends upon two factors, the current flowing in the plate circuit of the AVC and the position at which the "Q" control is set. Referring to Fig. 2, it will be seen that the resistance in the cathode circuit of the 58 R.F. and I.F. tubes will vary between 310 and 8,310 ohms depending upon the setting of the "Q" control. The voltage drop established by the plate and screen currents flowing through this resistance is applied to the grids of these tubes and is the grid bias voltage at low signal strengths. When higher signal strengths are applied, the AVC will draw plate current, setting up a voltage drop across the 200,000 ohm AVC plate resistor which will add to the voltage drop across the 310 ohm resistor and the section of the "Q" control between this resistor and the movable arm of the control.

The first 57 tube functions both as an oscillator and as the 1st detector. Referring to Fig. 2, there are four coils shown to the right of this tube, all of these coils being in an inductive relation. These coils and the two I.F. tuning condensers make up the Oscillator-1st I.F. Assembly, the wiring of which is shown in Fig. 4.

The tuned circuit P_1, P_2 is resonant at a frequency of 262 K.C. Circuit S_1, S_2 (at the top) is also resonant at this frequency. The two coils P_1, P_2 and S_1, S_2 are the primary and secondary respectively of the first I.F. transformer. Circuit P_1, P_2, P_3 constitutes the primary of the oscillator and circuit S_1, S_2, (below) the secondary. Circuit S_1, S_2, the oscillator secondary, is tuned by the third section of the three-gang tuning condenser and is always resonant at a frequency of 262 K.C. above the frequency to which the R.F. circuits are tuned.

A surge of energy fed into the secondary of the oscillator, inductively, causes this circuit to begin to oscillate at its resonant frequency of 262 K.C. above the radio frequency. This oscillator frequency is fed back through the tap in the secondary coil into the grid circuit of the 1st detector. There the oscillator signal is amplified and fed inductively through the primary system in the plate circuit of the tube back into the secondary, thus sustaining the oscillations at the frequency to which the oscillator secondary circuit is tuned.

The first 57 tube also functions as the 1st detector or mixer and is of the bias type. Bias voltage for this tube is established by the plate and screen currents flowing through the 3,200 ohm resistor in the cathode circuit. This resistor is bypassed by a .002 Mfd. condenser. The bias voltage is influenced to a slight extent by the oscillatory current and will vary within a small range, depending on the frequency to which the receiver is tuned.

There are two frequencies present in the grid circuit of the 57 1st detector. One is the radio frequency and the other is the oscillator frequency which is always 262 K.C. above the radio frequency. This results in the beat or intermediate frequency being present in the plate circuit of the tube. Since circuit P_1, P_2, the primary of the first I.F. transformer, is resonant at 262 K.C., the maximum I.F. voltage will be developed across this circuit. This voltage is then induced in the secondary of the first I.F. transformer, S_1, S_2, the latter circuit also being tuned to 262 K.C.

In order to provide satisfactory tracking with the R.F. and 1st detector tuned circuits, the oscillator is provided with a 1400 K.C. trimmer condenser and a 775 Mmf. series condenser. The 1400 K.C. trimmer condenser is located on top of the tuning condenser and is connected across the oscillator tuning condenser. The 775 Mmf. series condenser is connected between the tuning condenser and the oscillator secondary coil.

The I.F. amplifier provides the high degree of sensitivity and selectivity for which the Super-Heterodyne is noted. The tuned circuits in the primary and secondary of both I.F. transformers afford a high degree of selectivity. High amplification is obtained by using the high mutual conductance 58 tube in a low frequency circuit which permits great amplification without instability.

Bias voltage for the I.F. amplifier tube is the same as the bias voltage for the 58 R.F. tube.

The I.F. transformers are small universal wound coils mounted on tubing. The I.F. tuning condensers are of the same type as the R.F. trimmer condensers and use mica dielectric. The coil tubing and the condensers are mounted on porcelain bases and are enclosed in aluminum cans located on top of the chassis. The adjusting screws of the four I.F. tuning condensers are reached from the bottom of the chassis.

CONDENSER ALIGNMENT

In the No. 900 chassis the R.F. and oscillator trimmer condensers are located on the variable tuning condenser assembly, one on each section. The tube shield cover plate extends over the top of the tuning condenser but need not be removed during readjustment of the trimmers as access to these is given by three circular holes in the cover plate. These trimmers are used to adjust the alignment at the high frequency end of the receiver.

There are also four I.F. trimmer condensers and in order to correct any misalignment of the I.F. transformers it is necessary to remove the chassis from the cabinet. The I.F. trimmer adjusting screws are located on the under side of the chassis subpanel and protrude through the porcelain bases of the I.F. transformers. The adjusting screws of the I.F. transformer trimmers as well as the R.F. trimmers should not be tampered with or changed unless it is apparent that they are out of adjustment. The I.F. trimmers are used to adjust the I.F. transformer circuits to 262 K.C.

An accurately calibrated signal generator and an output indicating meter are essential in order to align the R.F. and I.F. circuits correctly. This signal generator must provide a signal at the broadcast frequencies of from 550 to 1500 K.C. and an intermediate frequency signal at 262 K.C. The broadcast band signals of the signal generator must be accurately known as the dial scale of the receiver is calibrated in kilocycles and the alignment of the gang tuning condenser must be made at definite frequencies in order to have the pointer at the correct location on the scale for the various frequencies. The intermediate frequency signal of the signal generator must also be accurate in order to align the I.F. circuits at 262 K.C.

The companies manufacturing test equipment including Weston-Jewell Electrical Instruments Company, Radio Products Company and Supreme Instruments Corporation have combination R.F. and I.F. signal generators, suitable for servicing this chassis, available to the Radio Trade, which have incorporated in them copper oxide meters for reading the receiver output. The output meter is connected across the voice coils of the speaker or across the primary of the speaker input transformer if it is of sufficient range. The output meter should always be used for alignment as the method of alignment by using the ear to determine maximum output is essentially inaccurate.

During all of the following alignment procedure a "dummy" 57 tube (one which has one filament prong removed) should be inserted in the AVC socket. This will remove any possibility of AVC action which would make the determination of the output peak very difficult. Alignment should never be attempted without any tube in the AVC socket as the lack of the tube capacity in the circuits will cause an incorrect alignment to be made. Attenuate the signal generator output to as low a value as will give a satisfactory reading on the output meter. This will eliminate the possibility of overloading the 2nd detector.

Aligning Intermediate Condensers—it is essential that the I.F. transformers be correctly tuned for maximum deflection on the output meter before the R.F. and oscillator circuits can be correctly aligned. Connect the lead from the signal generator to the control grid of the 57 1st detector. The tube shield should be in position and the chassis grounded but the tube shield cover may be removed to facilitate making the control grid connection. A small battery clip on the signal generator lead makes for convenience in making this connection. Connect the ground lead of the signal generator to the ground post on the back of the chassis. The oscillator must be shorted out by grounding the lead from the tap on the secondary. This can be done conveniently by connecting a jumper from ground to the lug on the 3200 ohm resistor at the end which connects to the oscillator-I.F. assembly.

Then adjust the four intermediate frequency condenser screws until maximum output is obtained on the output meter. After all four of them have been adjusted the first time, go over them again and check the setting for maximum output.

Aligning R.F. and Oscillator Condensers—For adjusting the R.F. and oscillator condensers, the signal input should be made to the antenna post on the back of the receiver chassis.

Loosen the drive plate set screws and turn the tuning condenser rotor until the rotor plates are fully meshed with the stator plates. Turn the drive plate until the dial pointer is directly over the lowest frequency mark. Then tighten one set screw.

Set the signal generator for a signal of 1400 K.C. and turn the drive plate until the pointer

MODEL 2090
Alignment, Part 2
Socket, Voltage
Speaker Connections
Notes, Transformer Data

GAMBLE-SKOGMO, INC.

is directly over the 1400 K.C. mark. Adjust the three trimmers at this frequency for maximum output, adjusting the oscillator trimmer first (trimmer nearest back of chassis).

Set the signal generator for a signal of 600 K.C. and tune the receiver exactly to this signal. Carefully note the dial mark which is under the pointer. If the pointer is not at 600 K.C. on the dial loosen the drive plate set screw and adjust the dial pointer until it is set on the other side of the 600 K.C. mark an amount equal to one-half the frequency difference between the former setting and 600 K.C., being careful not to move the tuning condenser rotor during this change. For instance, if the dial pointer was at 580 K.C. when the 600 K.C. signal was tuned in, it should be moved to read 610 K.C. If the 600 K.C. signal was tuned in at 610 K.C. on the dial, the pointer should be moved to read 595 K.C. Then tighten the drive plate set screw lightly.

Set the signal generator again for a frequency of 1400 K.C. and adjust the tuning condenser so that the dial pointer is at 1400 K.C. on the dial. Readjust the trimmer condensers until maximum output is obtained on the output meter.

Recheck the calibration at 600 K.C. for maximum output. The dial reading should now be correct but in case it is still off slightly, the foregoing procedure should be gone through again. When maximum output is obtained with the pointer at 600 K.C. on the dial tighten both drive plate set screws tightly, taking care that the rotor shaft does not slip.

Then set the signal generator for signals of 1000, 750 and 600 K.C. and check the two R.F. condensers for resonance. Bend the slotted rotor plate sections of each of these two condensers which are last in mesh, in or out until maximum output is obtained. Do not adjust the oscillator condenser slotted rotor plate sections (condenser nearest back of chassis)

ISOLATION OF DEFECTS

The signal generator described in the preceding section provides a convenient and simple method of locating and isolating defects in the R.F. and I.F. circuits. This method consists of introducing a signal into the grid circuit of each tube starting with the 2nd detector and working on to the R.F. stage.

First set the signal generator for a signal of 262 K.C. and connect the ground lead of the signal generator to the ground post of the chassis. Touch the signal lead from the signal generator to the grid contact of the 2nd detector socket. It will, of course, be necessary to have the chassis removed from the cabinet for this test. If the receiver is in good condition from the 2nd detector on through the audio stages the signal will be reproduced at the loudspeaker.

Next connect the signal generator to the grid of the 58 I.F. tube. If the receiver is in operating condition from the I.F. tube through the output stage the signal will be heard at the speaker. Check the magnitude of the output with the output meter and, in order to determine if it is sufficient, make the same test on another receiver of the same type which is known to be in good working order. Then connect the signal generator lead to the grid of the 57 1st detector, ground the oscillator tap and read the output. If signal output is obtained it is an indication that the circuit through the 1st I.F. transformer, but not including the oscillator, is in good order.

Next set the signal generator for a signal in the broadcast band and connect the signal generator lead to the grid of the 57 1st detector. Remove the grounding lead from the oscillator tap. A deflection should be read on the output meter when the receiver is tuned to the frequency of the generator signal. This indicates that the chassis starting with the 1st detector and including the oscillator is in good condition. Then, still using the R.F. signal, connect the signal generator lead to the grid of the 58 R.F. tube. If the receiver is in good order starting with the R.F. tube, a deflection will be had on the output meter. If such is the case, the trouble can only be in the antenna input transformer.

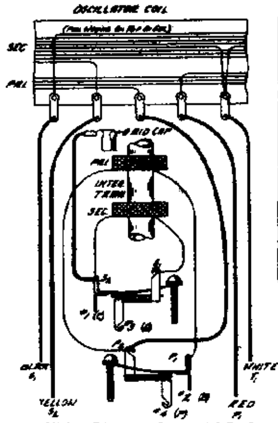

Fig. 4—Wiring Diagram, Osc. and I.F. Assembly

ANTENNA AND 1st DETECTOR TRANSFORMERS

The antenna and 1st detector transformers are matched at the factory in sets of two and should it be necessary to replace one of these it is desirable from the standpoint of efficient operation of the receiver to replace both of them. To replace only one transformer may result in a loss of performance unless the one replaced is of the correct value.

The two transformers are contained in shielding cans under the chassis subpanel. It is not necessary to remove these cans in order to replace the transformers. Unscrew and remove the screw holding the transformer mounting bracket to the subpanel. Bring the transformer out as far as the leads will permit and unsolder the leads to the transformer terminal lugs. Next put the new transformer in position and solder the leads to the lugs. Then replace the screw holding the transformer mounting bracket to the subpanel. After the two transformers have been installed, realign the tuning condensers in accordance with the instructions in the section on "Alignment."

OSCILLATOR AND 1st I.F. ASSEMBLY

The oscillator and I.F. assembly is made up in one compact unit contained in a shielding can. As explained in the article on the circuit, this unit has four coils, all in inductive relation. The primary and secondary of the intermediate frequency transformer in this unit are small universal wound coils. The primary is under the oscillator coil form, while the secondary is mounted in a lower position on the standard. The oscillator is wound on a coil form placed at the top of the unit. The primary winding is on top of the secondary. At the bottom of the unit on the porcelain base are the two I.F. tuning condensers. Complete wiring of the unit is shown in Fig. 4. The unit is carefully adjusted at the factory before assembly in the receiver. If it becomes defective in any way other than a break in the wiring connections which can readily be repaired, it is suggested that the whole unit be replaced rather than attempt replacement of the component parts.

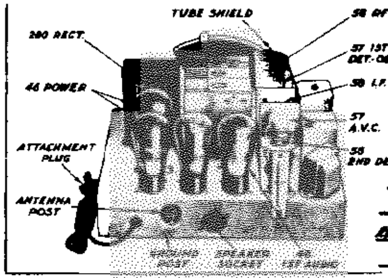

To replace this assembly, unsolder the leads to the lugs on the porcelain base and unsolder the four leads extending through the base. Remove the two nuts from the studs extending through the chassis subpanel, after which the assembly may be removed. The new assembly may then be put on and the leads soldered in.

If the oscillatory current is too high, grid current may flow in the 57 1st detector and 58 I.F. grid circuits. Grid current in the case of the 58 will manifest itself as a decrease in volume after the "Q" control has been increased past a certain setting. Grid current in the case of the 57 will manifest itself in weak action and as a whistle with no signal under certain conditions. The causes of oscillation being too strong are 3200 ohm biasing resistor being too low in value, .002 Mfd. bypass condenser being too high in value, too many turns on oscillator primary and oscillator primary wound low on coil with respect to the secondary, or a 57 1st detector tube which has a characteristic high plate current.

If the oscillations are too weak, this manifests itself as a flutter, usually at low frequencies. In extreme cases, oscillation may cease entirely, causing inoperation of the receiver at all frequencies. Weak oscillations are caused by the reverse of the conditions mentioned above, namely, 3200 ohm biasing resistor being too high in value, .002 Mfd. bypass condenser being too low in value, too few turns on oscillator primary, oscillator primary wound too high on the coil with respect to the secondary, or a low emission 57 1st detector tube.

BYPASS CONDENSERS

The correct testing of bypass condensers of the paper dielectric type for open or short circuits is of the utmost importance. This may be accomplished by using a direct reading ohmmeter. The application of the test prods to the condenser under test will cause a momentary deflection of the meter (the extent of the deflection depending upon the capacity of the condenser and the voltage used with the ohmmeter and in general, the larger the capacity the greater the deflection) after which the meter needle will drop back to infinity if the condenser is in good electrical condition. In the event the condenser circuit is open, there will be no deflection on the meter. A shorted condenser, on the other hand, will give a full scale deflection or zero resistance reading. A leaky condenser will give a partial reading depending upon the extent of the leak or the internal resistance. Bypass condensers of very small capacity in the order of .05 Mfd. or .002 Mfd. or less cannot be successfully tested by this method except for a shorted or leaky condition and if a condenser of this type is suspected of being open, simple trial replacement is the best procedure.

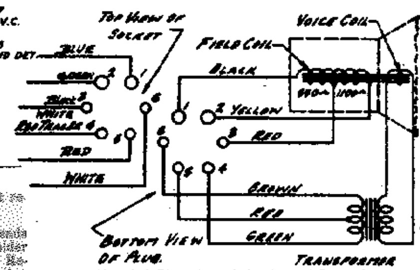

No. 4245 Electrodynamic Speaker and Connections

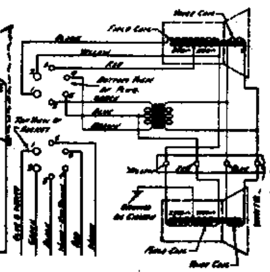

No. 4246 and 4247 Electrodynamic Speakers and Connections

FLUTTERING OR MOTORBOATING

The tube shield and cover must be on, otherwise motorboating may result. Still other causes are open or defective grid circuits or open bypass condensers. Fluttering is very often due to I.F. oscillation and the causes for such a condition should be investigated in line with the information given in the section on "Oscillation."

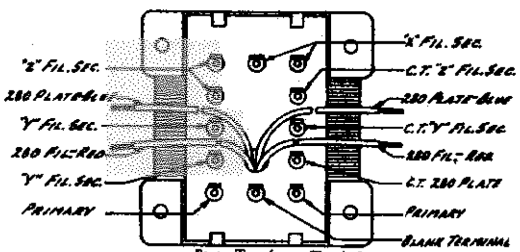

Power Transformer Terminals

No. 2090 CHASSIS —VOLTAGES AT SOCKETS—LINE VOLTAGE 115 VOLUME CONTROL AT MAXIMUM—"Q" CONTROL AT MAXIMUM

Type of Tube	Position of Tube	Function	"A" Volts	"B" Volts	Control Grid "C" Volts	Screen Volts	Screen Current MA	Cathode Volts	Plate MA	Grid Test MA
58	1	R.F.	2.25	125	5.0(1)	125	1.7	5.0	6.0	10.0
57	2	1st Det	2.25	125	5.0(2)	125	.2(2)	5.0(2)	1.2(2)	2.0
58	3	I.F.	2.25	125	5.0(1)	125	1.7	5.0	6.0	10.0
57	4	AVC	2.25	100(3)	24.0(4)	145	0	24.0	0	0
55	5	2nd Det.	2.25	150	12.0			12.0	.4	.5
46	6	Driver	2.25	215	19.0(5)				25.0	20.0
46	7	Power	2.25	320					5.0(6)	12.0
46	8	Power	2.25	320					5.0(6)	12.0
280	9	Rect.	4.8						41 Per Plate	

(1) Measured from movable arm of "Q" control to ground. Reads 25 volts with "Q" control at minimum.
(2) Values read with analyzer plug in socket. Actual values different as analyzer prevents oscillating from starting.
(3) Measured with 600,000 Ohm Meter.
(4) Measured across 1000 Ohm Resistor.
(5) Measured across 10,000 Ohm Carbon Voltage Divider Resistor.
(6) Plate current at no signal. At full output plate current is 60 to 70 MA.

GAMBLE-SKOGMO, INC.

MODELS 2092,2094
Schematic

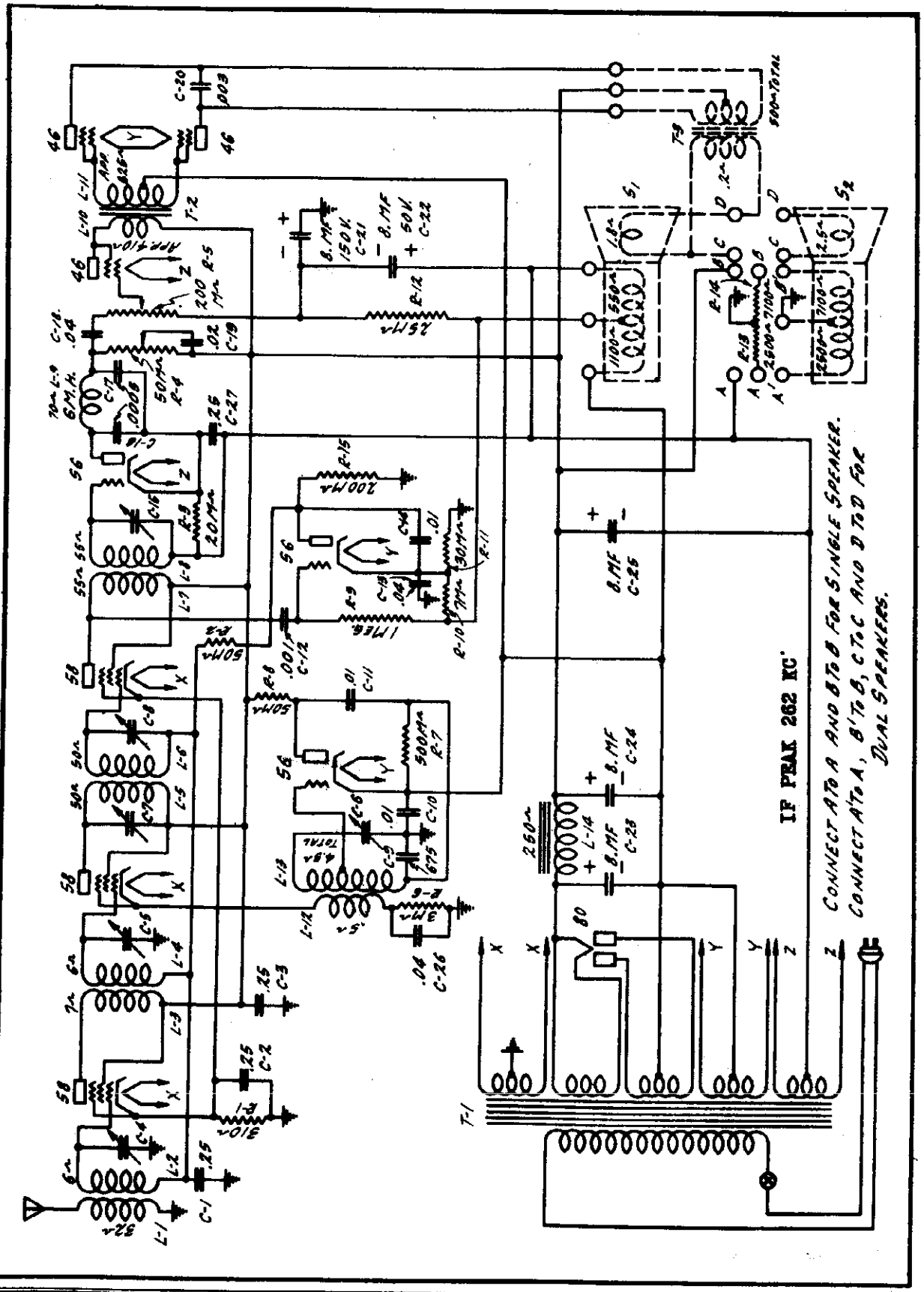

©John F. Rider, Publisher

MODELS 2092,2094
Voltage,Alignment
Notes,Change

GAMBLE-SKOGMO, INC.

No. 2094 CHASSIS —VOLTAGES AT SOCKETS—LINE VOLTAGE 115
VOLUME CONTROL AT MAXIMUM

Type of Tube	Position of Tube	Function	"A" Volts	"B" Volts	Control Grid "C" Volts	Screen Volts	Screen Current MA	Cathode Volts	Plate Current MA	Grid Test MA
58	1	R.F.	2.35	125	.3(1)	125	1.3	5.0	5.6	9.6
58	2	1st Det	2.35	115	5.0(2)	115	.6	10.0	2.9	3.5
58	3	I.F.	2.35	125	.3(1)	125	1.3	5.0	5.6	9.6
56	4	2nd Det.	2.30	170	12.0			12.0	.6	.6
46	5	Driver	2.25	215	18.0(3)				18.0	21.0
56	6	Osc.	2.30	130	7-15(4)			0(4)	3.7	3.8
56	7	AVC	2.25	60(5)	2.0(6)			35.0	0	0
46	8	Class B	2.25	310	0				6.0(7)	13.0
46	9	Class B	2.25	310	0				6.0(7)	13.0
280	10	Rect.	4.2						41 Per Plate	

(1) Actual Voltage measured across 310 ohm biasing resistor—5.0 Volts.
(2) Actual Voltage measured across 3,000 ohm bias resistor—10 Volts.
(3) Read with Volume Control at minimum.
(4) Varies as shown with frequency. Actual voltage measured across 500,000 ohm bias resistor—15 to 35 Volts.
(5) Actual Voltage measured across 30,000 ohm voltage divider resistor—92 Volts.
(6) Actual Voltage measured across 7,000 ohm voltage divider resistor—22 Volts.
(7) Plate current at no signal.

Remove the 56 oscillator tube during I.F. alignment.

Alignment of the R.F. and oscillator circuits is made at 1400 K.C. by means of the trimmer condensers mounted on the main tuning condenser. These should be adjusted to give maximum output on a 1400 K.C. oscillator signal with the receiver dial indicator set exactly at 1400. When maximum output has been obtained the oscillator is next set for a signal of 600 K.C. and the receiver tuned to this signal. The dial reading should then be 600 but, if it is not exact, may be corrected by loosening the set screws which hold the drive disc and turning the disc until correct reading is obtained. Alignment at 1400 K.C. will then have to be repeated.

OSCILLATION

A common cause of oscillation is open bypass condensers and these should be checked by simple trial replacement. Coupling between I.F. grid and plate leads may cause the trouble and these leads should be separated and pushed close to the chassis. Too great R.F. gain in the receiver may cause instability or oscillation and is corrected by removing four or five turns from the primary of the 1st detector transfomer. This should not be done, however, until all other causes of oscillation have been investigated.

DISTORTION

Distorted reproduction may be brought about by defective tubes and in any case of distortion these should be checked first. An inoperative 46 output tube will especially cause distortion due to harmonics in the output of the good tube not being balanced out by the other tube. Leaky or open bypass condensers may also cause distortion.

The connections to the voice coil of one speaker being reversed will cause a very noticeable distortion and these should be checked at the terminal strip. Open field windings in either speaker will allow the receiver to continue operation but at reduced volume and with some distortion.

At low volume, distortion may be caused by a tone control rheostat having a resistance higher than the normal value of 50,000 ohms. Other resistors which will bring about distortion if they are high in value are the 20,000 ohm 2nd detector bias resistor and the 7,000 ohm resistor in the voltage dividing circuit which provides grid bias for the AVC tube. In case of distortion at low volume, therefore, these resistors should be checked with an ohmmeter and replaced if not within normal 10% limits.

EXCESSIVE HUM

Excessive hum may be brought about by an open filter condenser or by an open circuit in one half of the 280 plate winding of the power transformer.

Heater-cathode shorts in the 56 or 58 tubes will cause the hum to be higher than normal and new tubes should be tried in any case of excessive hum. Certain 46 tubes, when used in the driver stage, will produce a hum much greater than normal and the tube in this socket should be inter-changed with the other two 46 tubes in the receiver.

Shorted turns in the filter choke or 1,650 ohm speaker field will cause the receiver to hum as will various shorts, opens or grounds at different points in the chassis.

CHASSIS No. 2092

Chassis No. 2092 is practically the same as chassis No. 2094, except that it is designed for single speaker operation. A speaker having a 1,650 ohm field is used with this chassis and a tapped wire wound resistor is substituted for the field of the second speaker.

©John F. Rider, Publisher

GAMBLE-SKOGMO, INC.

MODEL 6965-A
Alignment

SERVICE NOTES
for the
SIX TUBE SUPERHETERODYNE RECEIVER
TWO BAND
1780 to 530 Kilocycles
18.8 to 5.6 Megacycles
THIRTY-TWO VOLT

This receiver is designed for operation on 32 volt battery plants only and must not be used on battery plants of a higher rated voltage than 32 volts without a voltage regulator. If the rating is higher than 32 volts consult your dealer, who will supply the proper voltage regulator.

ALIGNMENT PROCEDURE: Realignment of this receiver should never be necessary unless one of the oscillator, antenna, or RF coils has been replaced. Lack of sensitivity, selectivity, and poor tone quality may be due to any one or a combination of causes such as weak or defective tubes or speaker, inadequate or excessively long antenna, open or grounded bias resistor, bypass condenser, etc. Under no circumstances should realignment be attempted until all other possible sources have been first thoroughly investigated and have been definitely proven not to be the cause. If an IF tube is replaced it is advisable to realign the IF amplifier particularly if the replacement tube is one of a different manufacture than the one in the receiver. It is important when aligning to carefully follow the procedure in the order given, otherwise the receiver will lack sensitivity and the dial calibration will be incorrect. IT IS IMPERATIVE THAT AN ACCURATELY CALIBRATED OSCILLATOR BE USED WITH SOME TYPE OF OUTPUT MEASURING DEVICE.

INTERMEDIATE ALIGNMENT:

1. Connect the high side of the oscillator output to the control grid of the 6A7 tube. Leave the grid cap disconnected and connect a 1 meg ohm resistor from the modulator grid to the chassis base. Connect the ground side of the oscillator to the receiver ground lead.

2. Set the test oscillator frequency to 465 kilocycles (this must be accurate).

3. Align the first intermediate transformer by turning one of the trimmer screws up and down (increasing and decreasing capacity) until maximum reading is obtained on the output meter, after which adjust the other trimmer screw of the same transformer for maximum sensitivity.

4. Adjust the other intermediate transformers in the same manner.

NOTE: Two types of intermediate transformer trimmers have been used in this receiver. One type has two parallel holes in the top of the shield, one for each trimmer. The other type has a brass hex nut for adjusting one trimmer, the other intermediate trimmer being adjusted with the trimmer screw located inside of the brass hex nut. Regardless of which type trimmer is used the procedure is the same.

5. Adjust the IF regeneration trimmer located underneath the chassis for maximum 465 kilocycle signal sensitivity. If adjustment of this trimmer causes the receiver to oscillate always adjust to a point where oscillation just stops, and then back off 1/8 turn.

TO ALIGN THE VARIABLE CONDENSER: It is important when aligning the gang condenser and padding and trimmer condensers to follow the procedure given carefully, otherwise the receiver will be insensitive and the dial calibration will be incorrect. The two coils located on the underside of the chassis which have trimmer condensers mounted on them will be referred to by their function as indicated on the circuit diagram.

1. Connect the high output side of the test oscillator through a .00025 Mfd. condenser to the set antenna lead and the ground to the set ground.

2. Place the band selector switch for operation on the 18.8 to 5.6 megacycle band, tune the receiver to EXACTLY 14 MEGACYCLES on the dial, and set the test oscillator frequency to EXACTLY 14 MEGACYCLES. THEN BRING IN THE 14 MEGACYCLE SIGNAL TO MAXIMUM OUTPUT BY ADJUSTING THE TRIMMER CONDENSER LOCATED ON TOP OF THE OSCILLATOR SECTION OF THE GANG CONDENSER. Looking at the front of the receiver the oscillator section is the rear section of the gang condenser. When adjusting this trimmer two peaks, the fundamental and the image peak, will be noticed. CARE MUST BE TAKEN SO THAT THE FUNDAMENTAL PEAK AND NOT THE IMAGE PEAK IS USED FOR ALIGNING THE RECEIVER AT 14 MEGACYCLES. First back off the trimmer to minimum capacity, next screw down the trimmer (add capacity) until the first peak, which is the fundamental and the one you are to use, is tuned in. If the trimmer is screwed down beyond the point where this first peak is received the incorrect image peak will be tuned in. When the first peak has been located adjust the trimmer to bring in the 14 megacycle signal to maximum output. After completing this adjustment always check to see if the proper peak has been used. To do this leave the test oscillator frequency at 14 megacycles, increase the output of the test oscillator and then tune the receiver dial to approximately 13 megacycles. Vary the receiver dial slightly to the right and left of 13 megacycles and if the fundamental peak was used in aligning at 14 megacycles the test oscillator signal will be heard at approximately 13 megacycles on the receiver dial. If it is not possible to receive the signal then the fundamental peak was not used and the 14 megacycle adjustment of the trimmer on top of the oscillator section of the gang condenser must be gone over and properly adjusted.

3. Set the band selector switch for operation on the broadcast band (1780-530 K.C.) adjust the test oscillator frequency to EXACTLY 1400 KILOCYCLES and the receiver dial to EXACTLY 1400 KILOCYCLES. THEN BRING IN THE 1400 KILOCYCLE SIGNAL TO MAXIMUM OUTPUT BY ADJUSTING THE 1780-530 KILOCYCLE TRIMMER (see circuit diagram) mounted on one of the coils located underneath the chassis. Next adjust the trimmer located on the front section of the gang condenser for maximum 1400 kilocycle signal sensitivity.

4. Leave the band selector switch for operation on the broadcast band (1780-530 K.C.), tune the receiver dial and set the test oscillator frequency to approximately 600 kilocycles. While rocking the gang condenser slightly to the right and left adjust the 1780-530 kilocycle padder condenser which is located on and accessible through the small hole in the front of the chassis, for maximum sensitivity.

5. Recheck the 1400 kilocycle signal adjustment.

6. Place the band selector switch for operation on the short wave 18.8 to 5.6 megacycle bend, set the test oscillator frequency to EXACTLY 14 MEGACYCLES and tune the receiver to EXACTLY 14 MEGACYCLES. While rocking the gang condenser slightly to the right and left adjust the 5.6 to18.8 megacycle trimmer (see circuit diagram) mounted on one of the coils underneath the chassis.

This completes the alignment and it is recommended that all the adjustments be gone over again, as generally it will be found that improved results can be obtained if this is done. Assuming that all tubes and component parts of the set are okeh, then extreme inaccuracies in the dial calibration, low sensitivity, and poor selectivity are indications that the alignment procedure has not been followed.

© John F. Rider, Publisher

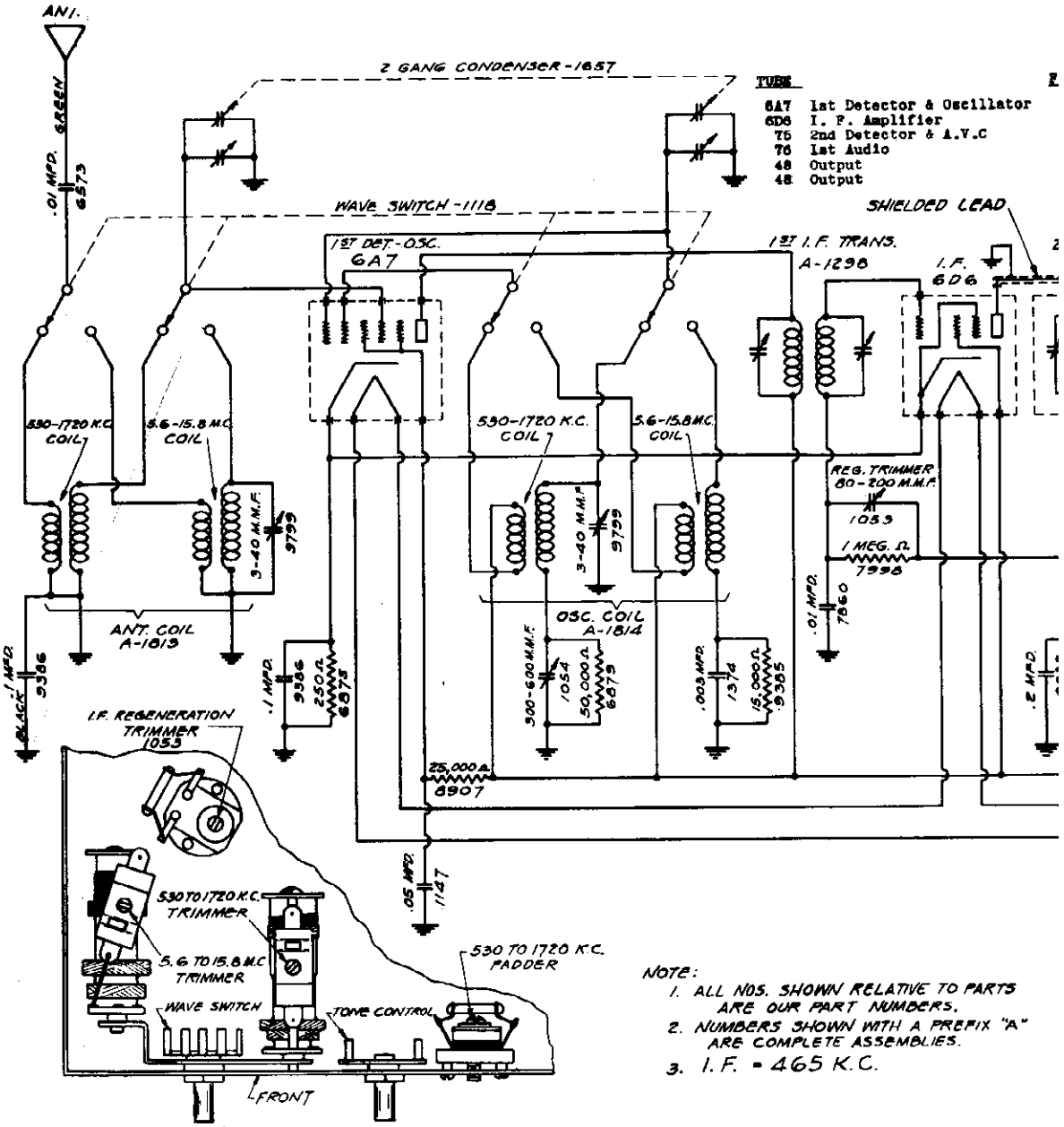

LOCATION OF PADDERS & TRIMMERS IN LEFT HAND (FRONT) BOTTOM OF CHASSIS

NOTE:
1. ALL NOS. SHOWN RELATIVE TO PARTS ARE OUR PART NUMBERS.
2. NUMBERS SHOWN WITH A PREFIX "A" ARE COMPLETE ASSEMBLIES.
3. I. F. = 465 K.C.

The power plug attached to the end of the power cord must be inserted correctly in the 32 volt power supply outlet or receptacle, otherwise the set will not operate. If after inserting the plug and turning the receiver on the set does not operate after approximately two minutes, remove the plug and turn it half way around and reinsert it in the power receptacle.

FUSE: A 3 ampere fuse is located on the back of the chassis adjacent to the speaker plug and protects the receiver from damage should a defect occur in the set or if it is connected to the improper power supply. Continued burning out of fuses on the proper power supply is indicative of some defect and the receiver shou be referred to your dealer for examination. THE WARRANTY IS VOID IF THE RECEIVER IS OPERATED WITH THE FUSE SHORTED OUT OR WITH A FUSE LARGER THAN 3 AMPERES.

ANTENNA: Always make the antenna as long as possible consistent with satisfactory selectivity. In most installations an antenna from 35 to 75 feet in length including lead-in will be ample. In isolated communities where distant daylight reception is desired it may be necessary to increase this so as to obtain good satisfactory daylight reception. As considerable radio interference (static noise) may be picked up when the generator is charging the battery if the aerial or lead-in are run parallel to the 32 volt power lines, the aerial and the lead-in should always be placed as far away from the 32 volt lighting lines as possible. This is not a reflection on the receiver nor does it indicate a defect, as the interference is caused by the generator. Some plant generators have built-in traps which effectively eliminate this interference. The aerial should be connected to the green lead coming out at the rear of the chassis.

GROUND: It is important that a good ground be used. A good ground clamp should be attached to a cold water pipe, or if no cold water pipe is available an iron pipe driven in the ground three or four feet in a place where it is moist will be satisfactory. Connect the ground to the black lead coming out at the rear of the chassis.

©John F. Rider, Publisher

MODEL 6953-A
Schematic, Voltage
Trimmers, Notes
Parts List

VOLTAGE TABLE

Battery Voltage - 32 Volts
Wave Band - Broadcast

tor	FILAMENT	PLATE	SCREEN	CATHODE	GRID NO.2	GRID NO. 3 & 5
	6	32				
	6	32	32	.5	32	15
	6	5*		.6		
	6	30				
	6	30	32	5		
	6	30	32	5		

* Triode plate comparative voltage only
Read all voltages from socket to chassis.

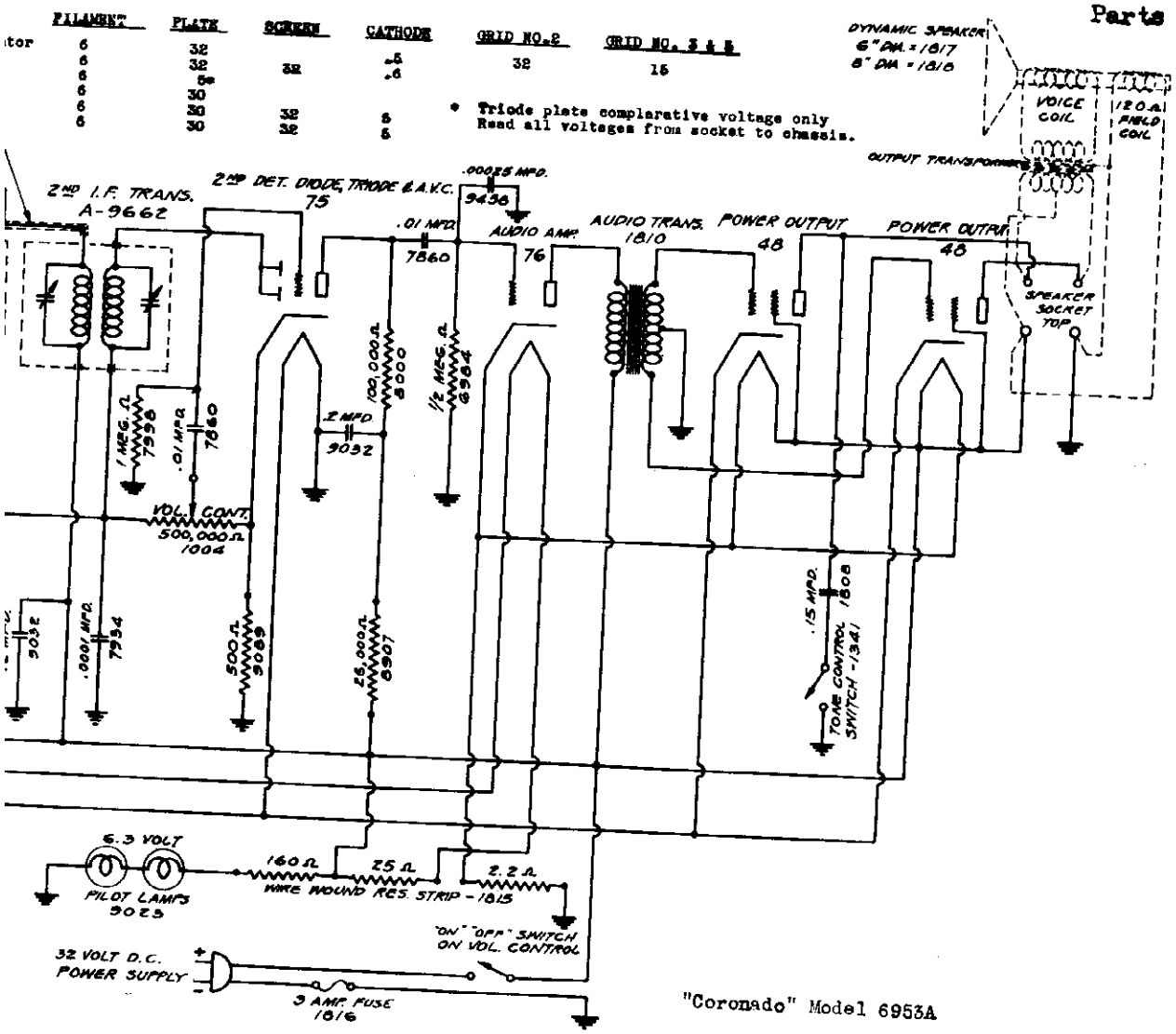

"Coronado" Model 6953A

PRICES ARE SUBJECT TO CHANGE WITHOUT NOTICE

PART NUMBER		LIST PRICE
1813	Antenna Coil	$1.63
1814	Oscillator Coil	1.63
1298	First I.F. Transformer	2.05
9662	Second I. F. Transformer	2.05
1810	Audio Transformer	1.75
1657	Two Gang Variable Condenser	4.00
1106	Drive Disc with Hub	.30
1641	Calibrated Dial (Calibration No. 1663) with Frame and Gasket	.50
	Glass for above Dial	.35
1744	Calibrated Dial (Calibration No. 1746) with Frame and Gasket	.48
	Glass for above Dial	.35
9023	6.3 Volt .15 Ampere Pilot Light	.19
1118	Wave Switch	.75
9799	Trimmer Condenser	.15
1053	Padding Condenser	.50
1054	Padding Condenser	.55
1004	Volume Control and Off and On Switch	1.24
1341	Tone Control Switch	.39
1548	Fuse Block Receptacle	.25
1816	3 Ampere Fuse	.12
7934	.0001 Mfd. Moulded Condenser	.21
9458	.00025 Mfd. Moulded Condenser	.21
1374	.003 Mfd. Moulded Condenser	.21

PART NUMBER		LIST PRICE
1148	.5 Mfd. 200 Volt Condenser	$ .55
9032	.2 Mfd. 200 Volt Condenser	.23
9386	.1 Mfd. 200 Volt Condenser	.19
1147	.05 Mfd. 200 Volt Condenser	.17
6573	.01 Mfd. 200 Volt Condenser	.17
1808	.15 Mfd. 200 Volt Condenser	.17
7860	.01 Mfd. 400 Volt Condenser	.17
1815	Resistor Strip	.17
1333	18,000 Ohm 1/2 Watt Resistor	.25
7998	1 Meg Ohm 1/3 Watt Resistor	.19
6984	500,000 Ohm 1/3 Watt Resistor	.19
8907	25,000 Ohm 1/3 Watt Resistor	.19
6879	50,000 Ohm 1/3 Watt Resistor	.19
9385	15,000 Ohm 1/3 Watt Resistor	.19
8000	100,000 Ohm 1/3 Watt Resistor	.19
9089	500 Ohm 1/3 Watt Resistor	.19
6875	250 Ohm 1/3 Watt Resistor	.19
1179	Large Knob	.19
1180	Small Knob with Dot	.15
1806	Escutcheon Plate marked "Foreign and Broadcast"	.17
1207	Escutcheon Plate marked "On and Off"	.13
1817	6" Dynamic Speaker	7.25
1818	8" Dynamic Speaker	9.00

MODEL 3126
Schematic

GAMBLE-SKOGMO, INC.

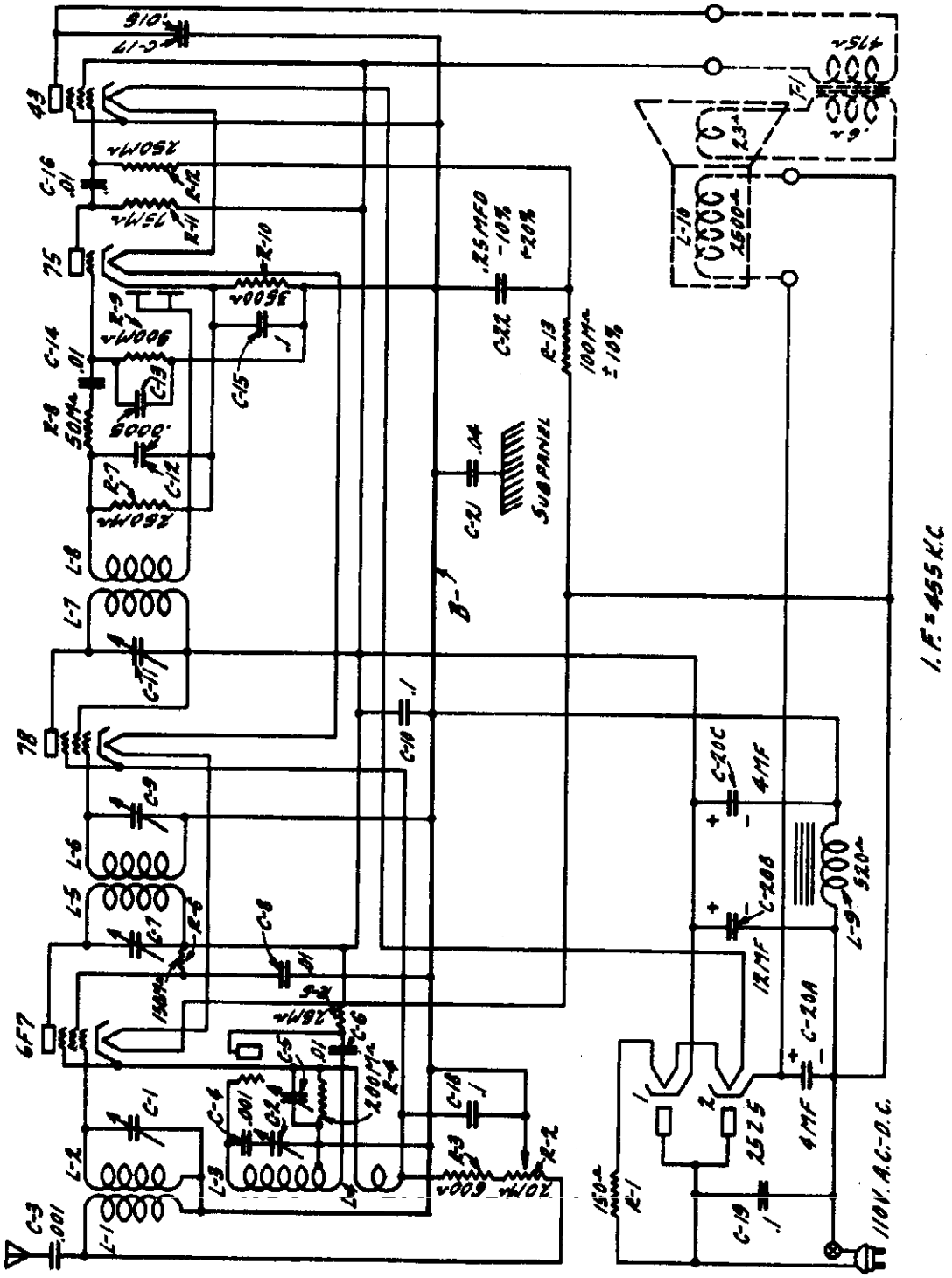

GAMBLE-SKOGMO, INC.

MODEL 30-A
MODELS 7735, 7742
7755
Schematics

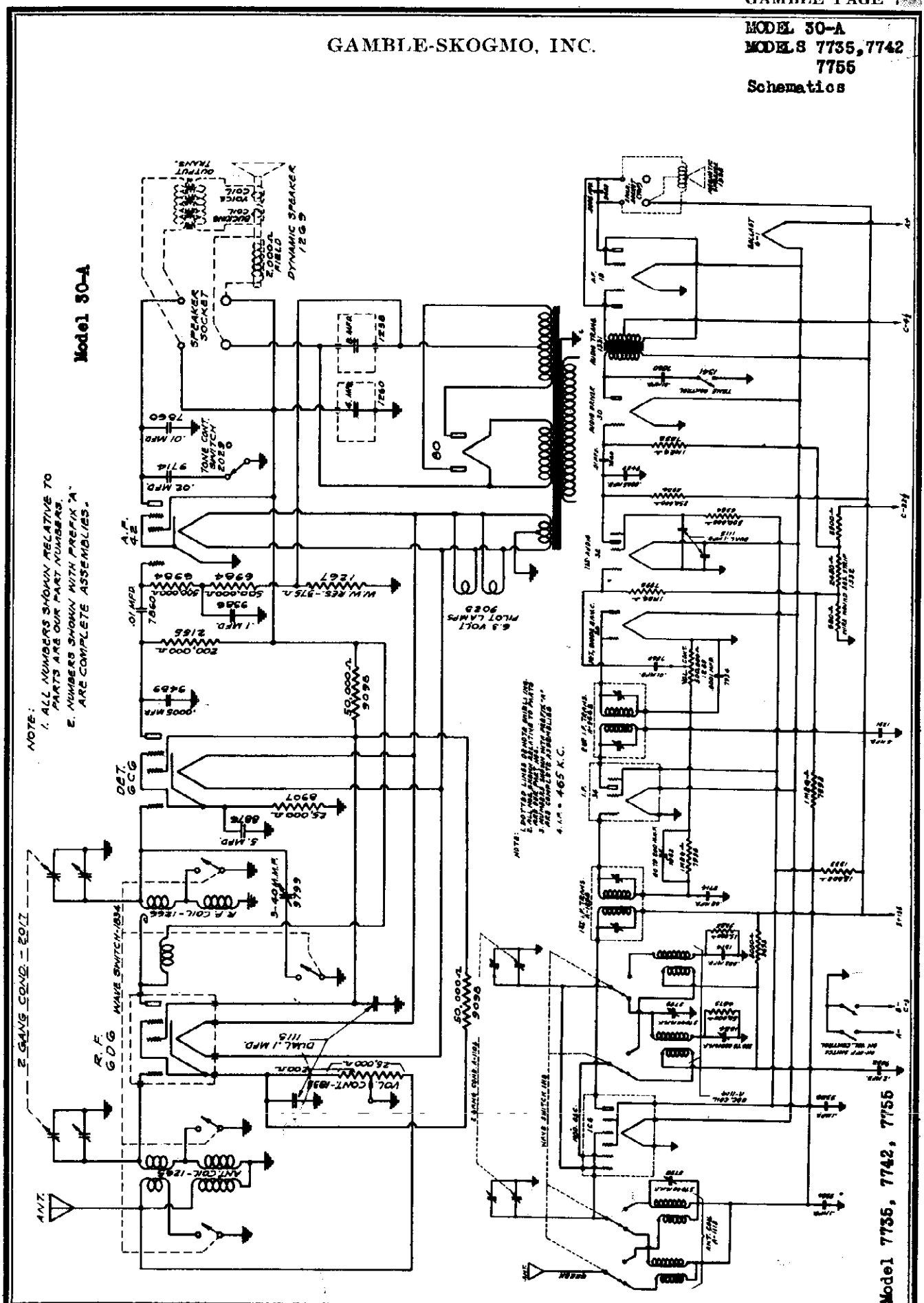

MODELS 7735,7742
7755
Alignment,Voltage
Parts List

GAMBLE-SKOGMO, INC.

SERVICE NOTES
FOR THE
BATTERY OPERATED
SEVEN TUBE SUPERHETERODYNE RECEIVER

ALIGNMENT PROCEDURE: FOR PROPERLY ALIGNING EITHER THE INTERMEDIATE TRANSFORMER OR THE GANG CONDENSER IT IS NECESSARY THAT AN ACCURATELY CALIBRATED TEST OSCILLATOR BE USED WITH SOME TYPE OF OUTPUT MEASURING DEVICE.

INTERMEDIATE ALIGNMENT:

1. CONNECT THE HIGH SIDE OF THE TEST OSCILLATOR OUTPUT TO THE CONTROL GRID OF THE 105 TUBE LEAVING THE GRID CAP DISCONNECTED. CONNECT THE GROUND SIDE OF THE TEST OSCILLATOR TO THE RECEIVER CHASSIS.

2. SET THE TEST OSCILLATOR FREQUENCY TO 465 KILOCYCLES (THIS MUST BE ACCURATE).

3. ALIGN THE FIRST INTERMEDIATE TRANSFORMER BY TURNING ONE OF THE TRIMMER SCREWS UP AND DOWN UNTIL MAXIMUM READING IS OBTAINED ON THE OUTPUT METER, AND THEN ADJUST THE OTHER TRIMMER SCREW OF THE SAME TRANSFORMER FOR MAXIMUM SENSITIVITY.

4. ADJUST THE SECOND INTERMEDIATE TRANSFORMER IN THE SAME MANNER.

NOTE: TWO TYPE INTERMEDIATE TRANSFORMER TRIMMERS HAVE BEEN USED IN THIS RECEIVER. ONE TYPE HAS TWO PARALLEL HOLES IN THE TOP OF THE SHIELD, ONE FOR EACH TRIMMER. THE OTHER TYPE HAS A BRASS HEX NUT FOR ADJUSTING ONE TRIMMER, THE OTHER INTERMEDIATE TRIMMER BEING ADJUSTED WITH THE SCREW LOCATED INSIDE OF THE BRASS HEX NUT. REGARDLESS OF WHICH TYPE TRIMMER IS USED THE PROCEDURE IS THE SAME.

TO ALIGN THE VARIABLE CONDENSER: IT IS IMPORTANT WHEN ALIGNING TO FOLLOW THE PROCEDURE CAREFULLY, OTHERWISE THE RECEIVER WILL LACK SENSITIVITY AND THE DIAL CALIBRATION WILL BE INCORRECT.

1. CONNECT THE HIGH OUTPUT SIDE OF THE TEST OSCILLATOR TO THE RECEIVER ANTENNA LEAD AND THE GROUND TO THE CHASSIS.

2. PLACE THE BAND SELECTOR SWITCH FOR OPERATION ON THE SHORT WAVE BAND, TUNE THE RECEIVER TO EXACTLY 15 MEGACYCLES ON THE DIAL, AND SET THE TEST OSCILLATOR FREQUENCY TO EXACTLY 15 MEGACYCLES. THEN TUNE IN THE 15 MEGACYCLE SIGNAL BY ADJUSTING THE TRIMMER MOUNTED ON TOP OF THE OSCILLATOR SECTION OF THE GANG CONDENSER TO MAXIMUM OUTPUT. LOOKING AT THE FRONT OF THE RECEIVER THE OSCILLATOR SECTION IS THE REAR SECTION OF THE GANG CONDENSER.

3. SET THE BAND SELECTOR SWITCH FOR OPERATION ON THE BROADCAST BAND, ADJUST THE TEST OSCILLATOR FREQUENCY TO 1400 KILOCYCLES AND SET THE RECEIVER DIAL TO EXACTLY 1400 KILOCYCLES. NEXT, BRING IN THE 1400 KILOCYCLE SIGNAL TO MAXIMUM OUTPUT BY ADJUSTING THE TRIMMER LOCATED UNDERNEATH AND NEAR THE CENTER FRONT OF THE CHASSIS.

4. AFTER MAKING THIS ADJUSTMENT TUNE THE DIAL TO 1720 KILOCYCLES AND SET THE TEST OSCILLATOR FREQUENCY TO 1720 KILOCYCLES. IF THE 1720 KILOCYCLE SIGNAL CANNOT BE RECEIVED REDUCE THE 1400 KILOCYCLE TRIMMER CAPACITY UNTIL THE 1720 KILOCYCLE SIGNAL IS BROUGHT IN.

5. NEXT, SET THE RECEIVER DIAL AND TEST OSCILLATOR TO EXACTLY 1400 KILOCYCLES, AND ADJUST THE TRIMMER LOCATED ON THE FRONT SECTION OF THE GANG CONDENSER FOR MAXIMUM SENSITIVITY.

6. LEAVE THE BAND SELECTOR SWITCH FOR OPERATION ON THE BROADCAST BAND, TUNE THE RECEIVER, AND SET THE TEST OSCILLATOR TO APPROXIMATELY 600 KILOCYCLES. THEN ADJUST THE 600 KILOCYCLE PADDING CONDENSER, WHICH IS LOCATED ON AND ACCESSIBLE THROUGH THE SMALL HOLE IN THE FRONT OF THE CHASSIS, FOR MAXIMUM SENSITIVITY. AS THIS ADJUSTMENT IS QUITE CRITICAL IT IS NECESSARY TO ROCK THE CONDENSER SLIGHTLY TO THE RIGHT AND LEFT TO FIND THE POINT OF GREATEST SENSITIVITY.

7. PLACE THE BAND SELECTOR SWITCH FOR OPERATION ON THE SHORT WAVE BAND, ADJUST THE TEST OSCILLATOR FREQUENCY TO EXACTLY 15 MEGACYCLES AND SET THE RECEIVER DIAL TO 15 MEGACYCLES. TURN THE RECEIVER ON ITS BACK WITH THE DIAL UP AND ADJUST THE TRIMMER, WHICH IS MOUNTED ON THE TOP OF THE COIL UNDERNEATH AND NEAR THE RIGHT HAND SIDE OF THE CHASSIS, FOR MAXIMUM OUTPUT. BE SURE TO ROCK THE CONDENSER SLIGHTLY TO THE RIGHT AND LEFT WHEN MAKING THIS ADJUSTMENT.

THIS COMPLETES THE ALIGNMENT PROCEDURE. IT IS RECOMMENDED THAT ALL OF THE ADJUSTMENTS BE GONE OVER AGAIN. GENERALLY IT WILL BE FOUND THAT IMPROVED RESULTS CAN BE OBTAINED IF THIS IS DONE.

VOLTAGE TABLE
"A" BATTERY - 3 VOLT DRY CELL
"B" BATTERY - 3 135 VOLT "B" BATTERIES
"C" BATTERY - 1 22½ VOLT BATTERY

TUBE	FILAMENT	PLATE	SCREEN	GRID NO. 2	GRID NO. 3 AND 5
105 OSCILLATOR & 1ST DETECTOR	2.1	135		115	67½
30 SECOND DETECTOR	2.1				
34 INTERMEDIATE FREQUENCY	2.1	135	67½		
32 1ST AUDIO	2.1	37.5*	20*		
30 DRIVER	2.1	135			
19 OUTPUT	2.1	135 EACH PLATE			

* COMPARATIVE VOLTAGE ONLY.
READ ALL VOLTAGES FROM SOCKET TO CHASSIS.
WHEN MAKING TUBE VOLTAGE CHECKS USE BATTERIES THAT DELIVER FULL VOLTAGE WITH THE RECEIVER TURNED ON.

TOTAL "B" DRAIN - .025 AMPERES
TOTAL "A" DRAIN - .620 AMPERES

PART NUMBER		LIST PRICE	PART NUMBER		LIST PRICE
1113	ANTENNA COIL	$1.65	1103	TWO GANG CONDENSER USED WITH EARLY TYPE DIAL	$3.95
1114	OSCILLATOR COIL	1.65	1697	TWO GANG CONDENSER USED WITH AEROPLANE TYPE DIAL	4.00
1298	1ST I. F. TRANSFORMER	2.05			
9662	2ND I. F. TRANSFORMER	2.05	1106	DRIVE DISC WITH METAL HUB	.32
1331	AUDIO TRANSFORMER	1.40	1641	CALIBRATED DIAL (CALIBRATION #1371) WITH FRAME AND GASKET	.50
1291	4 MFD. WET ELECTROLYTIC CONDENSER	.85			
1115	DUAL .1 MFD. 200 VOLT CONDENSER	.35	1643	CALIBRATED DIAL (CALIBRATION #1653) WITH FRAME AND GASKET	.50
7860	.01 MFD. 400 VOLT CONDENSER	.17			
9032	.2 MFD. 200 VOLT CONDENSER	.25	1744	CALIBRATED DIAL (CALIBRATION #1405) WITH FRAME AND GASKET	.50
9189	.0005 MFD. MICA MOULD CONDENSER	.21			
7934	.0001 MFD. MICA MOULD CONDENSER	.21	1745	CALIBRATED DIAL (CALIBRATION #1745) WITH FRAME AND GASKET	.50
1374	.003 MFD. MICA MOULD CONDENSER	.21			
1332	WIRE WOUND RESISTOR STRIP	.35		GLASS FOR ABOVE DIALS	.35
7998	1 MEG OHM 1/3 WATT RESISTOR	.19	1206	ESCUTCHEON PLATE MARKED FOREIGN AND BROADCAST	.13
6984	500,000 OHM 1/3 WATT RESISTOR	.19	1207	ESCUTCHEON PLATE MARKED ON AND OFF	.13
8906	250,000 Ohm 1/3 WATT RESISTOR	.19	1361	TUBE SHIELD	.15
6879	50,000 OHM 1/3 WATT RESISTOR	.19	9988	TUBE SHIELD	.11
1335	SPEAKER	6.25	1053	PADDING CONDENSER	.50
1118	WAVE SWITCH	.75	1054	PADDING CONDENSER	.55
1333	18,000 OHM 1/2 WATT RESISTOR	.19	9799	TRIMMER CONDENSER	.15
9693	5,000 OHM 1/3 WATT RESISTOR	.19	6-1	VOLTAGE REGULATOR TUBE	3.00
8907	25,000 OHM 1/3 WATT RESISTOR	.19	1170	KNOB, LARGE	.15
1292	6 CONDUCTOR BATTERY CABLE	.68	1180	KNOB, SMALL WITH DOT	.17
1289	VOLUME CONTROL WITH D. P. S. T. SWITCH	1.24	9758	KNOB, SMALL	.14
1341	TONE CONTROL SWITCH	.40	1370	TUNING DIAL EARLY TYPE	.30

PRICES ARE SUBJECT TO CHANGE WITHOUT NOTICE

©John F. Rider. Publisher

MODEL 26
Schematic

GAROD RADIO CORP.

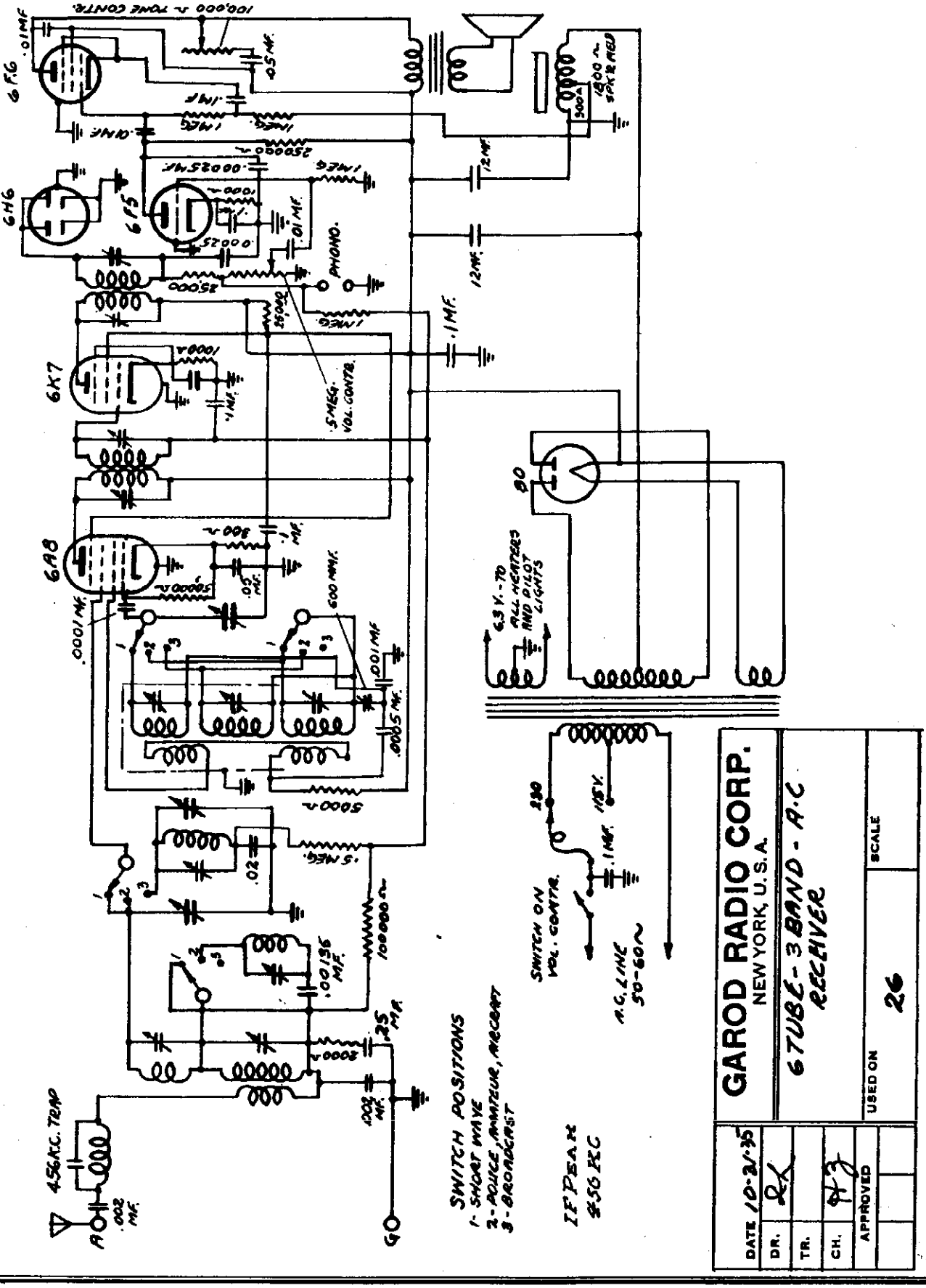

GAROD RADIO CORP. NEW YORK, U.S.A.	6 TUBE - 3 BAND - A.C. RECEIVER	SCALE
		USED ON 26

DATE	DR.	TR.	CH.	APPROVED
10-21-35	RL		RJ	

©John F. Rider, Publisher

MODEL 60
Schematic
Voltage
Alignment

GAROD RADIO CORP.

VOLTAGE TABLE

TUBE	FUNCTION	H'T'R	PLATE	SC.GR	CATH.	OSC.PL.
6A7	[illegible]	4.5	100.2	65.0	---	90.0
6K7	I.F. amp.	4.5	100.2	100.0	---	----
75	diode det. and 1st audio	4.4	40.0	---	---	----
43	audio outp.	20.2	94.0	100.0	12.3	----
2525	rectifier	21.0	114.0	---	---	----

NOTE: Fil. voltages measured with a low impedance A.C. voltmeter. Actually, the voltages at 110V line are approximately 6 volts and 25 volts for the 6.3, and 25 volt tubes respectively.

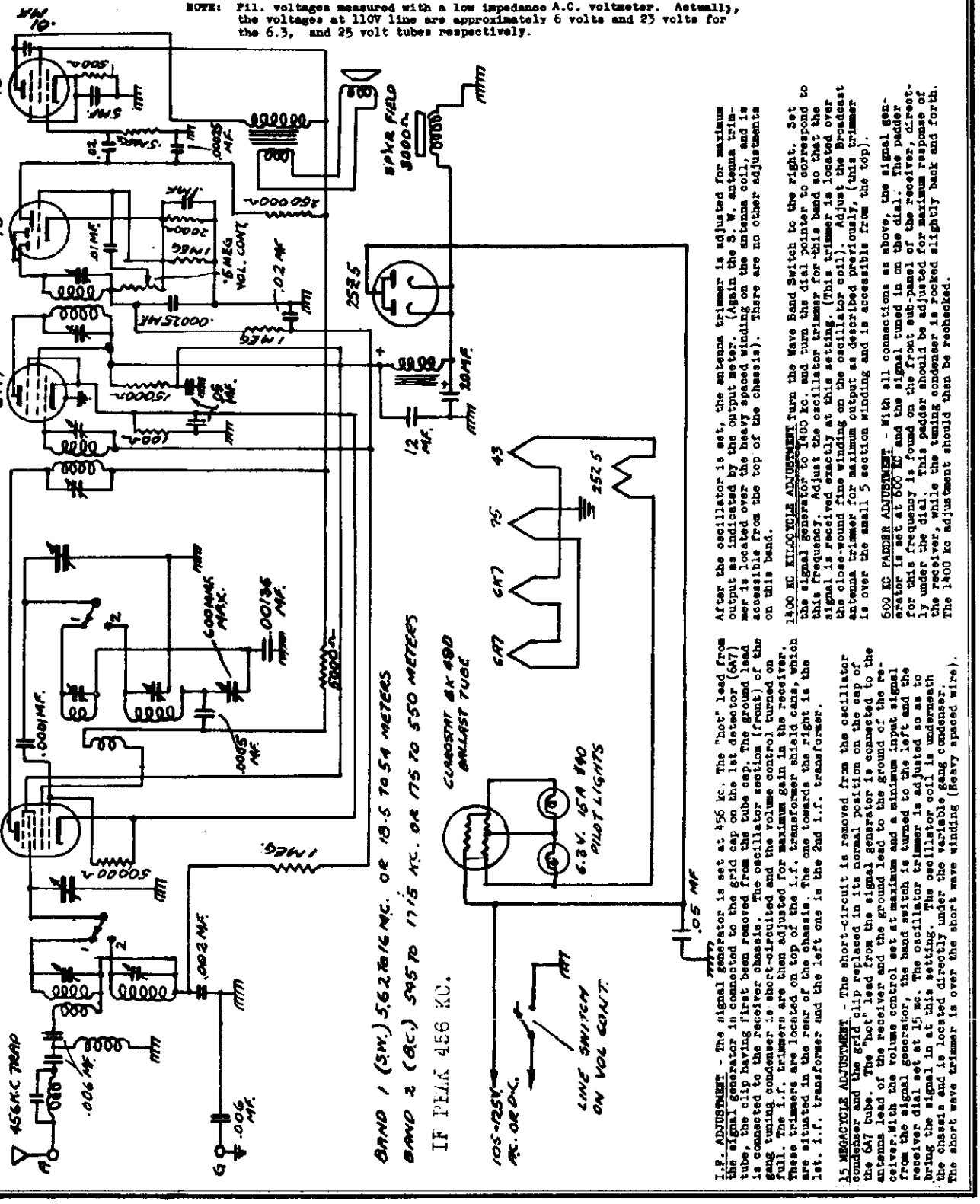

After the oscillator is set, the antenna trimmer is adjusted for maximum output as indicated by the output meter. (Again the S. W. antenna trimmer is located over the heavy spaced winding on the antenna coil, and is accessible from the top of the chassis). There are no other adjustments on this band.

1400 KC KILOCYCLE ADJUSTMENT Turn the Wave Band Switch to the right. Set the signal generator to 1400 kc. and turn the dial pointer to correspond to this frequency. Adjust the oscillator trimmer for this band so that the signal is received exactly at this setting. (This trimmer is located over the close-wound fine winding on the oscillator coil). Adjust the Broadcast antenna trimmer for maximum output as described previously, (this trimmer is over the small 5 section winding and is accessible from the top).

600 KC PADDER ADJUSTMENT - With all connections as above, the signal generator is set at 600 KC and the signal tuned in on the dial. The padder for this frequency is found on the front sub-panel of the receiver, directly under the dial. This padder should be adjusted for maximum response of the receiver, while the tuning condenser is rocked slightly back and forth. The 1400 kc adjustment should then be rechecked.

I.F. ADJUSTMENT - The signal generator is set at 456 kc. The 'hot' lead from the signal generator is connected to the grid cap on the 1st detector (6A7) tube, the clip having first been removed from the tube cap. The ground lead is connected to the receiver chassis. The oscillator section (front) of the gang tuning condenser is short-circuited and the volume control turned on full. The i.f. trimmers are then adjusted for maximum gain in the receiver. These trimmers are located on top of the i.f. transformer shield cans, which are situated in the rear of the chassis. The one towards the right is the 1st. i.f. transformer and the left one is the 2nd i.f. transformer.

15 MEGACYCLE ADJUSTMENT - The short-circuit is removed from the oscillator condenser and the grid clip replaced in its normal position on the cap of the 6A7 tube. The 'hot' lead from the signal generator is connected to the antenna lead of the receiver and the ground lead to the ground of the receiver. With the volume control set at maximum and a minimum input signal from the signal generator, the band switch is turned to the left and the receiver dial set at 15 mc. The oscillator trimmer is adjusted so as to bring the signal in at this setting. The oscillator coil is underneath the chassis and is located directly under the variable gang condenser. The short wave trimmer is over the short wave winding (Heavy spaced wire).

©John F. Rider, Publisher

GAROD RADIO CORP.

MODELS 31,31LW
33,33LW
Schematic

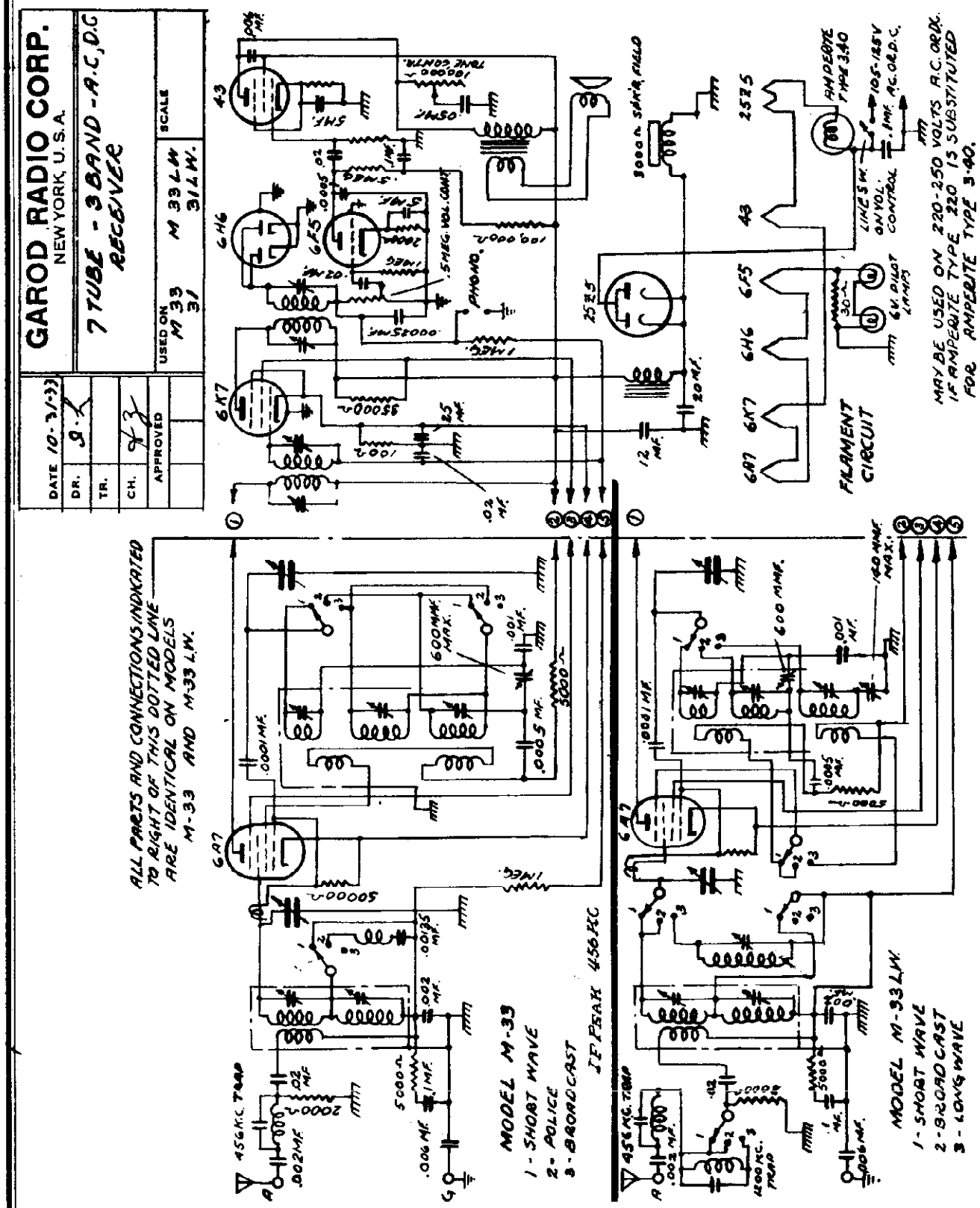

©John F. Rider, Publisher

MODELS 32,32LW
Schematic

GAROD RADIO CO.

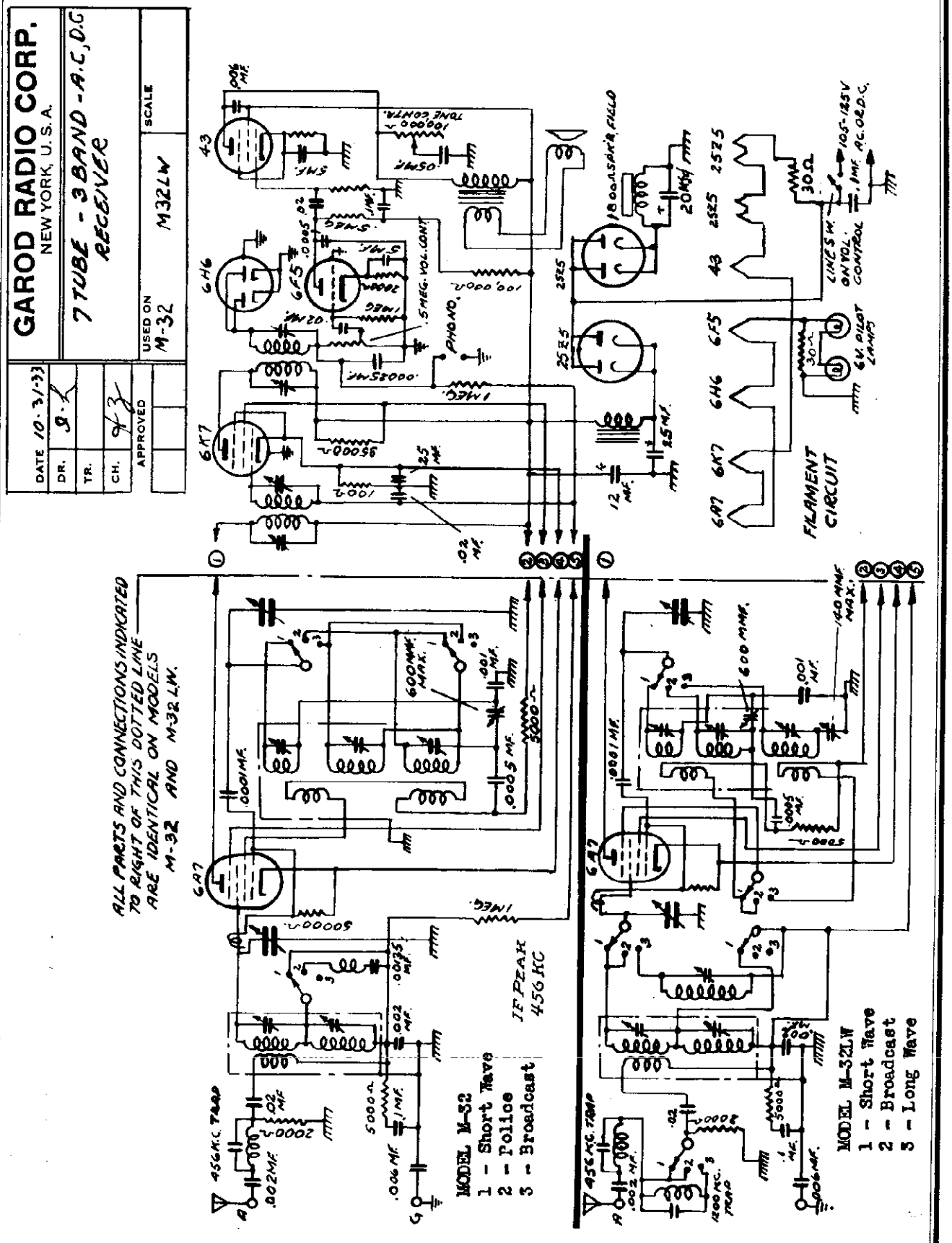

©John F. Rider, Publisher

GAROD RADIO CO.

MODELS 31,31LW,32,32LW
33,33LW
Alignment,Voltage

SERVICE NOTES FOR THE MODEL 33, 33LW, 31, 31LW, 32, 32LW
7 TUBE 3 BAND A.C.-D.C. SUPERHETERODYNE RECEIVERS

ALIGNMENT PROCEDURE

Realignment of this receiver should not be attempted unless all other possible causes of faulty operation have first been thoroughly investigated. An accurately calibrated signal generator which will cover the various wave-bands, and an output meter for indicating the effects of adjustments, are required.

MODEL 33LW, 31LW, 32LW

I.F.ADJUSTMENT - The signal generator is set at 456 kc. The "hot" lead from the signal generator is connected to the grid cap on the 1st detector (6A7) tube, the clip having first been removed from the tube cap. The ground lead is connected to the receiver gnd. post. The oscillator section (front) of the gang tuning condenser is short-circuited and the volume control turned on full. The i.f. trimmers are then adjusted for maximum gain in the receiver. These trimmers are located on top of the i.f. transformer shield cans, which are situated in the rear of the chassis, to the left. The one nearest the front is the 1st i.f. transformer and the rear one is the 2nd i.f. transformer.

16 MEGACYCLE ADJUSTMENT - The short-circuit is removed from the oscillator condenser and the grid clip replaced in its normal position on the cap of the 6A7 tube. The "hot" lead fron the signal generator is connected to the antenna post of the receiver and the ground lead to the ground post of the receiver. With the volume control set at maximum and a minimum input signal from the signal generator, the band switch is set at position no. 1 and the receiver dial set at 16 mc. The oscillator trimmer is adjusted s as to bring the signal in at this setting. This trimmer is found on the side of the oscillator coil shield can which is located directly in front of the i.f. transformers. The upper trimmer is the one for this wave-band. After the oscillator is adjusted, the antenna trimmer is adjusted for maximum output. This is found on the front of the antenna coil can which is directly in front of the 6A7 tube. The lower trimmer is the one for this band. There are no other adjustments on this band.

1400 KILOCYCLE ADJUSTMENT - With the receiver and signal generator both set at 1400 kc. the procedure outlined above is repeated. The trimmers are adjusted for maximum gain of the receiver. These trimmers are located on the coil shield cans; the oscillator trimmer for this band is the bottom one on the oscillator can; the detector trimmer, is the upper one on the detector or antenna coil can. The 600 kc. padder is on the front sub-panel.

600KC PADDER ADJUSTMENT - With all connections as above, the signal generator is set at 600KC and the signal tuned in on the dial. The paddor for this frequency is found on the front sub-panel of the receiver, directly under the wave band switch. This padder should be adjusted for maximum response of the receiver, while the tuning condenser is rocked slightly back and forth. The 1400 kc adjustment should then be rechecked.

LONG WAVE ADJUSTMENT - With the receiver and signal generator both set at 325 kc. the procedure outlined above is repeated. The trimmers are located on the left side panel of the chassis; the one towards the rear is the oscillator trimmer, and the one near the front is the antenna trimmer. The series padder for this band is located in the lower left hand corner of the front sub-panel.

MODEL 31 - 32 - 33

The alignment procedure for the Model 32 - 32LW is exactly the same as for the model 33LW, 31LW except for the location of the trimmers, and the designation of the bands. These are as follows:

Short wave band - Oscillator trimmer is the upper one on the oscillator coil can.
Antenna trimmer is the lower one on the antenna coil can.
No series padder.

Broadcast band - Oscillator trimmer is the lower one on the antenna coil can.
Antenna trimmer is the upper one on the antenna coil can.
600 kc. series padder is on the top of the chassis directly in front of the oscillator coil.

Police band -- Trimmers are on the left side panel of the chassis. The one towards the rear is the oscillator shunt trimmer; the one towards the front is the antenna shunt trimmer.

NOTE: These bands must be aligned in the sequence shown.

VOLTAGE TABLE

TUBE	FUNCTION	H'T'R	PLATE	SC.GR	CATH.	OSC.PL.
6A7	det.-osc.	4.5	100.2	47.0	---	90.0
6K7	i.f. ampl.	4.3	100.2	47.0	---	---
6H6	diode det.	4.5	---	---	---	---
6F5	1st audio	4.4	40.0	---	---	---
43	audio outp.	20.2	94.0	100.0	12.3	---
25Z5	rectifier	21.0	114.0	---	---	---

NOTE: Fil. voltages measured with a low impedance AC-voltmeter. Actually, the voltages at 110V line are approximately 6 volts and 23 volts for the 6, 3, and 2 volt tubes respectively.

Model 32 exactly same as Model 31, but 600 kc. padder is located on the left front of the chassis. Model 32LW same as 31LW.

©John F. Rider. Publisher

MODEL 35SW
Schematic

GAROD RADIO CO.

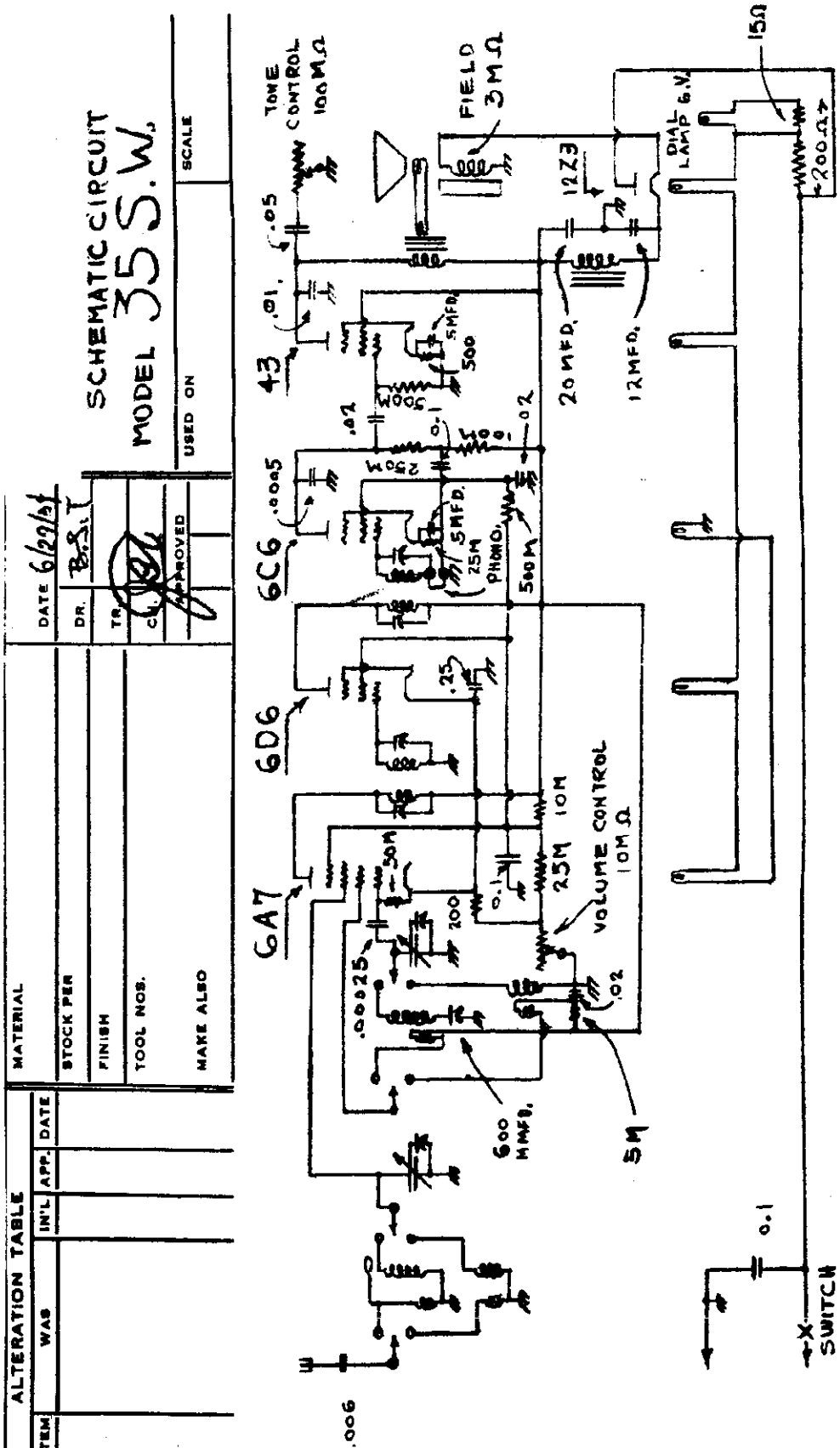

©John F. Rider, Publisher

©John F. Rider, Publisher

MODELS #49M, #49M "F" CONSOLE, and #49M "P" COMBINATION

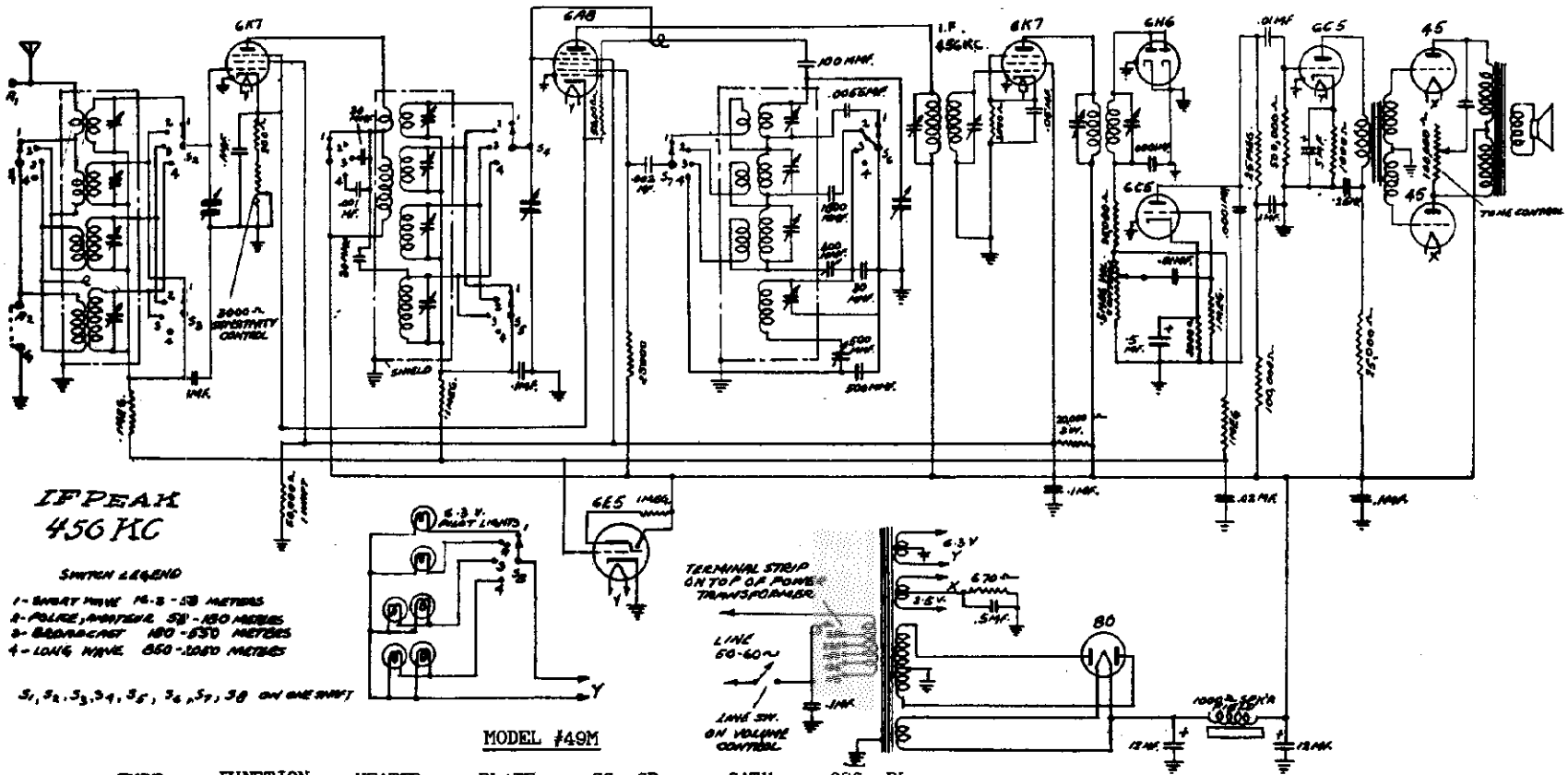

MODEL #49M

TUBE	FUNCTION	HEATER	PLATE	SC. GR.	CATH	OSC. PL.
6K7	Preselector	6.3	280	110	4	
6A8	Det. osc.	6.3	280	110	4	120
6K7	I F amp.	6.3	280	110	9	
6H6	2nd Det.	6.3			0	
6C5	1st audio	6.3	25	1		
6C5	2nd audio	6.3	190		7	
45 (2)	Output	2.5	280			
80	Rectifier	5.0				

Note: 6E5 used only on later series of Model #49.

DATE	10-31-38
DR.	D.K.
TR.	
CH.	H.Z.
APPROVED	
10 TUBE - 4 BAND - A.C RECEIVER	
USED ON	49 M
SCALE	

All voltages except filament, are measured from socket terminals to chassis and with a 1000 Ohms per volt voltmeter. The set must be in operation and the sensitivity control in its maximum clockwise position.

Filament voltages are taken from filament prong to filament prong at tube socket and measured with a low impedance AC voltmeter.

GAROD RADIO CORP. (New Co.)

MODELS 49, 49M
Schematic
Voltage

MODELS 49,49M
Alignment
Socket,Trimmers

GAROD RADIO CORP.

SERVICE NOTES FOR THE MODEL 49M
10 TUBE 4 BAND A.C. SUPERHETERODYNE RECEIVER
ALIGNMENT PROCEDURE

Realignment of this receiver should not be attempted unless all other possible causes of faulty operation have been thoroughly investigated. An accurately calibrated signal generator which will cover the necessary wave-bands and an output meter for indicating the effect of adjustments are required.

It is important to remember that in receivers of this kind which are equipped with automatic volume control it is necessary to use the minimum possible signal from the signal generator; otherwise the A.V.C. action will tend to nullify the variations in output as the trimmers are adjusted.

I.F. ADJUSTMENT - The signal generator is set at 456 kc. and is connected to the grid of the first detector (6A7). With the oscillator section of the tuning condenser short-circuited and the receiver volume control at its maximum position, the i.f. trimmers are adjusted for maximum output. These trimmers may be found on the i.f. transformer shield cans in the rear of the chassis to the right and rear of the gang condenser.

18 MEGACYCLE ADJUSTMENT - The high side of the signal generator is connected to the antenna lead of the receiver and the low side to the ground lead. The receiver and the signal are both tuned to a frequency of 18 mc. with the selector switch in position for band no. 1. The oscillator trimmer condenser is adjusted so that the 18 mc signal is tuned in exactly as the 18 mc calibration point, with the volume control on full and the signal generator adjusted for minimum input. The antenna preselector and first detector trimmers are then adjusted in the order named for maximum output. These trimmers are located on the tops of the shield cans at the left side of the chassis; reading from front to back, these coils are as follows: 1. antenna preselector; 2. first detector; 3. oscillator. It will be noted that there are four trimmers on each of these coils. The adjustment screw for the trimmer in the front left hand corner of each is painted red. This denote the trimmer for the no. 1 band.

5 MC. ADJUSTMENT - With the band selector switch in position for operation on band no. 2. and the receiver and signal generator both set at 5 mc. the procedure outlined above is repeated. The oscillator trimmer is found on the rear coil can, and is located to the right of the red painted trimmer. The antenna preselector and interstage coil trimmers are located in the same positions on the corresponding shield cans.

The signal generator is set at 1.7 mc. and the signal tuned in on the dial. The padder condenser for this band is adjusted for maximum gain while the gang tuning condenser is rocked slightly to the right and left. The 5 mc. adjustment should then be rechecked. The 1.7 mc. Padder is located on the sub-base on which the gang tuning condenser is mounted and is the left hand one at the group of three found here.

1400 KC. ADJUSTMENT - The band selector switch is set in position for operation on the no. 4 band. The receiver and signal generator are both set at 1400 kc. and the procedure outlined above is repeated. The oscillator trimmer is found on the rear coil can, and is located diagonally opposite the red painted trimmer. The other trimmers for this band are located in similar positions on the corresponding coil cans.

The signal generator is set at 600 kc. and the signal tuned in on the dial. The padder condenser for this band is adjusted for maximum response while the gang tuning condenser is rocked slightly to the right and left. The 1400 kc. adjustment should then be rechecked. The 600 kc. padder is located on the sub-panel on which the gang tuning condenser is mounted and is the center of the three located at this point.

340 KC. ADJUSTMENT - The band selector switch is set in position for operation on band no. 4. The receiver and generator are both tuned to 340 kc. and the procedure outlined above is repeated. The oscillator trimmer is located on the rear coil can. It is the one directly behind the trimmer marked in red. The other trimmers for this band are located in similar positions on the corresponding shield cans.

The signal generator is set at 150 kc. and the signal is tuned in on the dial. The padder condenser for this band is adjusted for maximum response while the gang tuning condenser is rocked slightly to the right and left. The 340 kc. adjustment should then be rechecked. The 150 kc. padder is located on the sub-panel on which the tuning condenser is mounted and is the right hand one of this group.

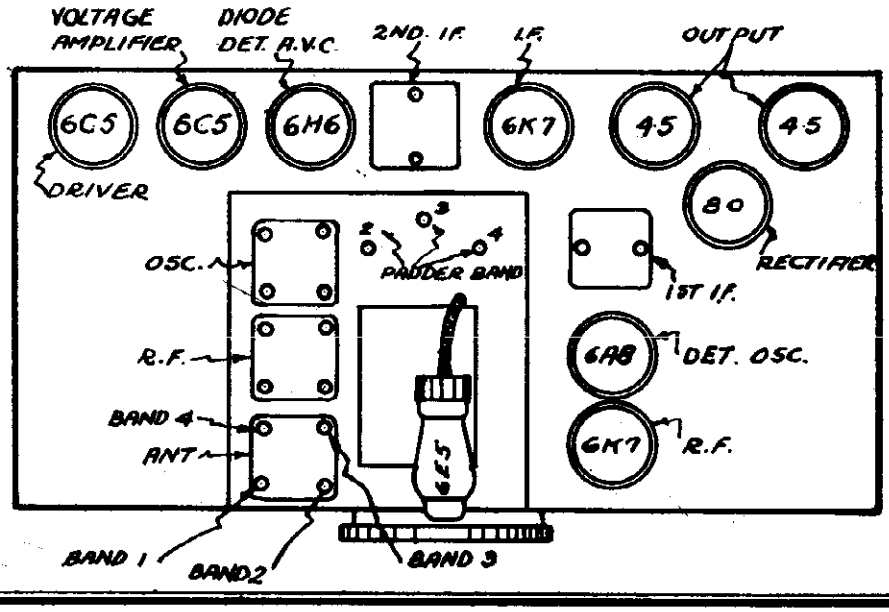

©John F. Rider, Publisher

GAROD RADIO CORP.

MODELS 104,104M
Schematic
Voltage

MODEL #104M

TUBE	FUNCTION	HEATER	PLATE	SC. GR.	CATH	OSC. PL.
6K7	Preselector	4.5	95	95	1.75	
6A7	Det. osc.	4.5	95	55	1.75	80
6K7	I F amp.	4.5	95	55	1.0	
85	2nd det. and 1st audio	4.5	40		2.0	
43 (4)	Audio output	21	120		15	
25z5	Rectifier	21			120	

Note: 6E5 used only in later series of Model #104

All voltages except filament, are measured from socket terminals to chassis and with a 1000 Ohms per volt voltmeter. The set must be in operation and the sensitivity control in its maximum clockwise position.

Filament voltages are taken from filament prong to filament prong at tube socket and measured with a low impedance AC voltmeter.

©John F. Rider, Publisher

SERVICE NOTES FOR THE MODEL 104M
11 TUBE 4 BAND A.C.-D.C. SUPERHETERODYNE RECEIVER
ALIGNMENT PROCEDURE

Realignment of this receiver should not be attempted unless all other possible causes of faulty operation have been thoroughly investigated. An accurately calibrated signal generator which will cover the necessary wave-bands and an output meter for indicating the effect of adjustments are required.

It is important to remember that in receivers of this kind which are equipped with automatic volume control it is necessary to use the minimum possible signal from the signal generator; otherwise the A.V.C. action will tend to nullify the variations in output as the trimmers are adjusted.

I.F. ADJUSTMENT - The signal generator is set at 456 kc. and is connected to the grid of the first detector (6A7). With the oscillator section of the tuning condenser short-circuited and the receiver volume control at its maximum position, the i.f. trimmers are adjusted for maximum output. These trimmers may be found on the i.f. transformer shield cans to the right and rear of the gang condenser.

18 MEGACYCLE ADJUSTMENT - The high side of the signal generator is connected to the antenna lead of the receiver and the low side to the ground lead. The receiver and the signal are both tuned to a frequency of 18 mc. with the selector switch in position for band no. 1. The oscillator trimmer condenser is adjusted so that the 18 mc signal is tuned in exactly at the 18 mc calibration point, with the volume control on full and the signal generator adjusted for minimum input. The antenna preselector and first detector trimmers are then adjusted in the order named for maximum output. These trimmers are located on the tops of the shield cans at the left side of the chassis; reading from front to back, these coils are as follows: - 1. antenna preselector; 2. first detector; 3. oscillator. It will be noted that there are four trimmers on each of these coils. The adjustment screw for the trimmer in the front left hand corner of each is painted red. This denotes the trimmer for the no. 1. band.

5 MC. ADJUSTMENT - With the band selector switch in position for operation on band no. 2. and the receiver and signal generator both set at 5 mc. the procedure outlined above is repeated. The oscillator trimmer is found on the rear coil can, and is located to the right of the red painted trimmer. The antenna preselector and interstage coil trimmers are located in the same positions on the corresponding shield cans.

The signal generator is set at 1.7 mc. and the signal tuned in on the dial. The padder condenser for this band is adjusted for maximum gain while the gang tuning condenser is rocked slightly to the right and left. The 5 mc. adjustment should then be rechecked. The 1.7 mc. Padder is located on the sub-base on which the gang tuning condenser is mounted and is the left hand one at the group of three found here.

1400 KC. ADJUSTMENT - The band selector switch is set in position for operation on the no. 3. band. The receiver and signal generator are both set at 1400 kc. and the procedure outlined above is repeated. The oscillator trimmer is found on the rear coil can, and is located diagonally opposite the red painted trimmer. The other trimmers for this band are located in similar positions on the corresponding coil cans.

CURRENT: This receiver operates on either alternating or direct current of any frequency.

VOLTAGE: Any line voltage from 105-135 volts may be used, without necessity of any adjustments. An adapter for 210-240 volt operation is available and can be supplied at an additional cost.

The signal generator is set at 600 kc. and the signal tuned in on the dial. The padder condenser for this band is adjusted for maximum response while the gang tuning condenser is rocked slightly to the right and left. The 1400 kc. adjustment should then be rechecked. The 600 kc. padder is located on the sub-panel on which the gang tuning condenser is mounted and is the center of the three located at this point.

340 KC. ADJUSTMENT - The band selector switch is set in position for operation on band no. 4. The receiver and generator are both tuned to 340 kc. and the procedure outlined above is repeated. The oscillator trimmer is located on the rear coil can. It is the one directly behind the trimmer marked in red. The other trimmers for this band are located in similar positions on the corresponding shield cans.

The signal generator is set at 150 kc. and the signal is tuned in on the dial. The padder condenser for this band is adjusted for maximum response while the gang tuning condenser is rocked slightly to the right and left. The 340 kc. adjustment should then be rechecked. The 150 kc. padder is located on the sub-panel on which the tuning condenser is mounted and is the right hand one of this group.

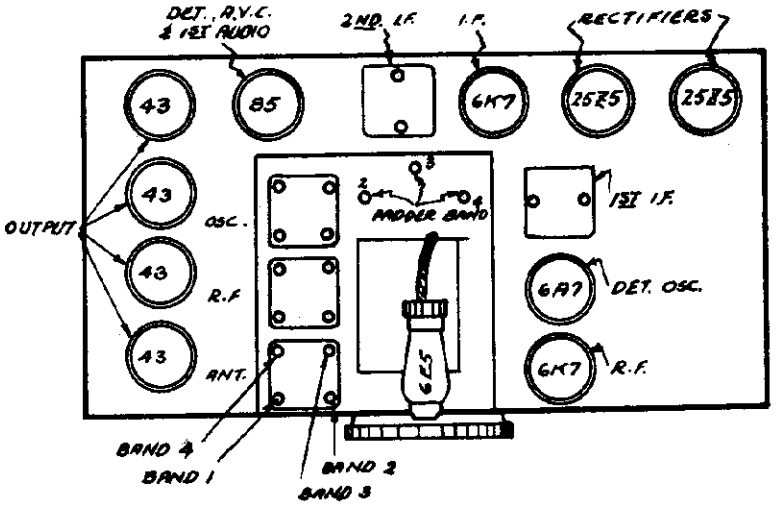

MODELS #104M, #104M "F" CONSOLE, and #104M "P" COMBINATION

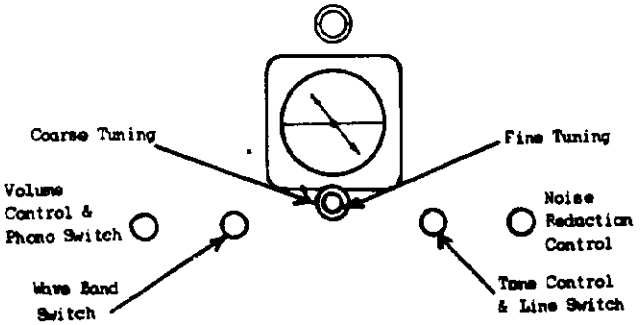

©John F. Rider, Publisher

GAROD RADIO CORP.

MODELS 511-A, 511-G
511-P
Schematic
Voltage

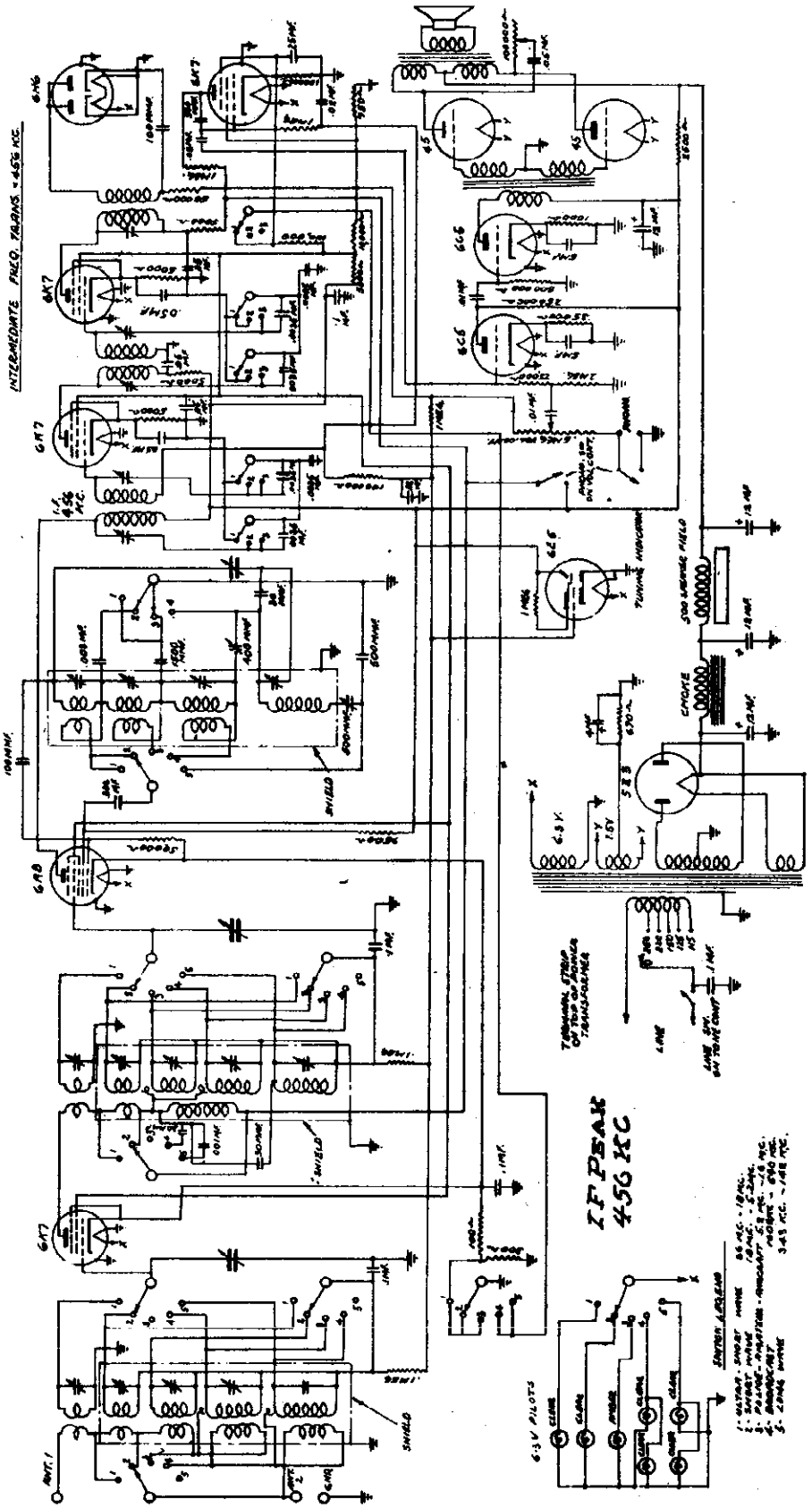

TUBE	FUNCTION	HEATER	PLATE	CATHODE	SCREEN	SUPPRESSOR	OSC. PLATE
6K7	R.F. Amp.	6.3	210	5	110	5	
6A8	det. osc.	6.3	210	5	110		175
6K7	1st I.F.	6.3	205	13	110	13	
6K7	2nd I.F.	6.3	190	9	110	9	
6H6	det.	6.3	0	0			
6C5	1st audio	6.3	110	8			
6C5	driver	6.3	206	8			
45's	audio output	2.5	320	56	7	0	
6K7	N S C	6.3	5	0			
5z3	Rectifier	5.0		420			

All voltages except filament measured with 1,000 Ohms per volt meter from socket to chassis with band switch in broadcast position, and fidelity switch in selective position.

©John F. Rider, Publisher

MODELS 511-A, 511-G 511-P Alignment, Socket, Trimmers

GAROD RADIO CORP.

SERVICE NOTES FOR THE MODEL 511A
12 TUBE 5 BAND A.C.-D.C. SUPERHETERODYNE RECEIVER
ALIGNMENT PROCEDURE

Realignment of this receiver should not be attempted unless all other possible causes of faulty operation have been thoroughly investigated. An accurately calibrated signal generator which will cover the necessary wave-bands and an output meter for indicating the effect of adjustments are required.

It is important to remember that in receivers of this kind which are equipped with automatic volume control it is necessary to use the minimum possible signal from the signal generator; otherwise the avc action will tend to nullify the variations in output as the trimmers are adjusted. A surer method is to make the avc tube inoperative. This may be done by shorting return of RF trimmers to ground.

I.F. ADJUSTMENT - The signal generator is set at 456 kc. and is connected to the grid of the first detector (6A7). With the oscillator section of the tuning condenser short-circuited and the receiver volume control at its maximum position, the i.f. trimmers are adjusted for maximum output. These trimmers may be found on the i.f. transformer shield cans in the rear of the chassis. The third i.f. transformer has only one trimmer. This is the one at the left rear of the chassis. The other two transformers have two trimmers each.

18 MEGACYCLE ADJUSTMENT - The high side of the signal generator is connected to the antenna lead of the receiver and the low side to the ground lead. The receiver and the signal are both tuned to a freqdency of 18 mc. with the selector switch in position for band no. 2. The oscillator trimmer condenser is adjusted so that the 18 mc.signal is tuned in exactly at the 18 mc.calibration point, with the volume control on full and the signal generator adjusted for minimum input. The antenna preselector and first detector trimmers are then adjusted in the order named for maximum output. These trimmers are located on the tops of the shield cans at the left side of the chassis; reading from front to back, these coils are as follows: 1. antenna preselector; 2. first detector; 3. oscillator. It will be noted that there are four trimmers on each of these coils. The adjustment screw for the trimmer in the front left hand corner of each is painted red. This denotes the trimmer for the no. 2 band.

36 MEGACYCLE ADJUSTMENT - With the band switch in position for the no. 1 band, the receiver and signal generator are both set at 36 mc. and the procedure outlined above is repeated. There is no oscillator trimmer for this band, a harmonic from the no. 2 band of the oscillator being used. The trimmer for the preselector stage is located on the underside of the chassis near the front and center. The first detector or interstage trimmer is located behind the band selector switch, also on the underside of the chassis.

5 MC. ADJUSTMENT - With the band selector switch in position for operation on band no. 3. and the receiver and signal generator both set at 5 mc. the procedure outlined above is repeated. The oscillator trimmer is found on the rear coil can, and is located to the right of the red painted trimmer. The antenna preselector and interstage coil trimmers are located in the same positions on the corresponding shield cans

The signal generator is set at 1.7 mc. and the signal tuned in on the dial. The padder condenser for this band is adjusted for maximum gain while the gang tuning condenser is rocked slightly to the right and left. The 5 mc. adjustment should then be rechecked. The 1.7 mc. Padder is located on the sub-base on which the gang tuning condenser is mounted and is the left hand one at the group of three found here.

1400 KC. ADJUSTMENT - The band selector switch is set in position for operation on the no. 4 band. The receiver and signal generator are both set at 1400 kc. and the procedure outlined above is repeated. The oscillator trimmer is found on the rear coil can, and is located diagonally opposite the red painted trimmer. The other trimmers for this band are located in similar positions on the corresponding coil cans.

The signal generator is set at 600 kc. and the signal tuned in on the dial. The padder condenser for this band is adjusted for maximum response while the gang tuning condenser is rocked slightly to the right and left. The 1400 kc. adjustment should then be rechecked. The 600 kc. padder is located on the sub-panel on which the gang tuning condenser is mounted and is the center of the three located at this point.

340 KC. ADJUSTMENT - The band selector switch is set in position for operation on band no. 4. The receiver and generator are both tuned to 340 kc. and the procedure outlined above is repeated. The oscillator trimmer is located on the rear coil can. It is the one directly behind the trimmer marked in red. The other trimmers for this band are located in similar positions on the corresponding shield cans.

The signal generator is set at 150 kc. and the signal is tuned in on the dial. The padder condenser for this band is adjusted for maximum response while the gang tuning condenser is rocked slightly to the right and left. The 340 kc. adjustment should then be rechecked. The 150 kc. padder is located on the sub- panel on which the tuning condenser is mounted and is the right hand one of this group.

MODELS #511 "A" and #511 "G" CONSOLE and #511 "P" COMBINATION HIGH FIDELITY RECEIVERS

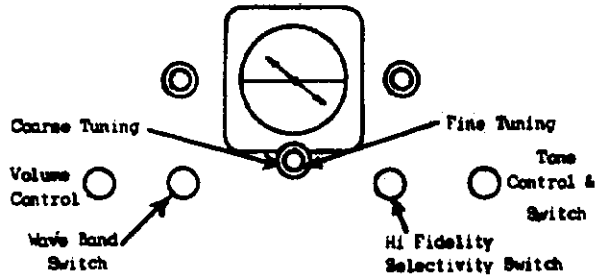

INSTRUCTIONS FOR INSTALLATION AND OPERATION

CURRENT: This receiver operates on AC (Alternating Current) only, on frequencies from 50 to 60 cycles.

VOLTAGE: Any line voltage from 105 to 260 volts may be used. This model is equipped with a universal transformer, with five taps marked as follows:- 110, 135, 150, 220, 250. Access to this tap changer is obtained by lifting off the box-like black cover on top of the transformer. The lug attached to the flexible lead is then moved to the point which corresponds most nearly to the line voltage available. The cover is then snapped back into place. Unless otherwise specified, the receiver is always connected to the 110 volt tap (suitable for 105 to 125 volts). Before inserting the line plug, be sure to ascertain what the line voltage is and connect to the correct tap.

PHONOGRAPH OPERATION: When the radio volume control is turned all the way to "OFF" position the phonograph pickup automatically connected into circuit. Turn motor switch ON, and the phonograph is ready for operation. Phonograph volume is regulated by means of a separate control located in the base of the phonograph pickup arm. The tone of the phonograph reproduction may be controlled in the same way as for radio operation.

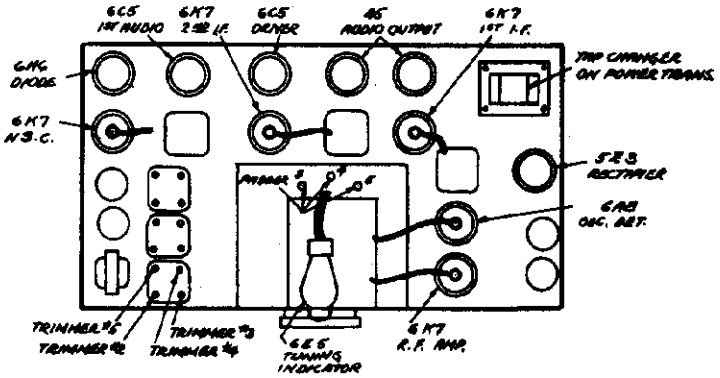

©John F. Rider, Publisher

GAROD RADIO CO.

MODELS 73, 73LW
Schematic

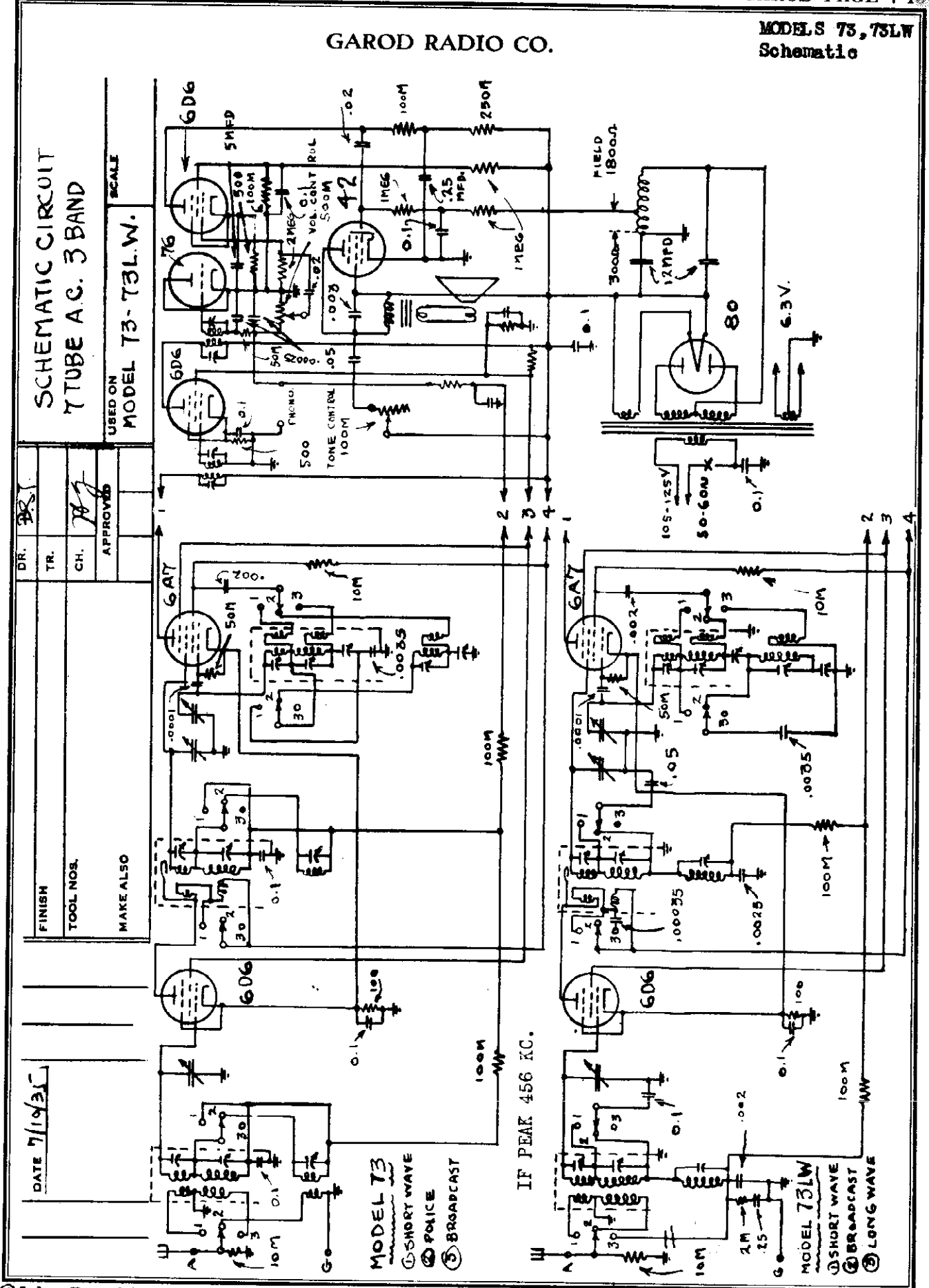

©John F. Rider, Publisher

MODEL 514
Alignment
Voltage

GAROD RADIO CORP.

SERVICE NOTES FOR THE MODEL 514
14 TUBE 5 BAND A.C.-D.C. SUPERHETERODYNE RECEIVER

ALIGNMENT PROCEDURE

I.F.ADJUSTMENT - The signal generator is set at 456 kc. and is connected to the grid of the first detector (6A7). With the oscillator section of the tuning condenser short-circuited and the receiver volume control at its maximum position, the i.f. trimmers are adjusted for maximum output. These trimmers may be found on the i.f. transformer shield cans in the rear of the chassis. The third i.f. transformer has only one trimmer. This is the one at the left rear of the chassis. The other two transformers have two trimmers each.

18 MEGACYCLE ADJUSTMENT - The high side of the signal generator is connected to the antenna lead of the receiver and the low side to the ground lead. The receiver and the signal are both tuned to a frequency of 18 mc. with the selector switch in position for band no. 2. The oscillator trimmer condenser is adjusted so that the 18 mc signal is tuned in exactly as the 18 mc calibration point, with the volume control on full and the signal generator adjusted for minimum input. The antenna preselector and first detector trimmers are then adjusted in the order named for maximum output. These trimmers are located on the tops of the shield cans at the left side of the chassis; reading from front to back, these coils are as follows: - 1. antenna preselector; 2. first detector; 3. oscillator. It will be noted that there are four trimmers on each of these coils. The adjustment screw for the trimmer in the front left hand corner of each is painted red. This denote the trimmer for the no. 2 band.

36 MEGACYCLE ADJUSTMENT - With the band switch in position for the no. 1 band, the receiver and signal generator are both set at 36 mc. and the procedure outlined above is repeated. There is no oscillator trimmer for this band, a harmonic from the no. 2 band of the oscillator being used. The trimmer for the preselector stage is located on the underside of the chassis near the front and center. The first detector or interstage trimmer is located behind the band selector switch, also on the underside of the chassis.

5.2 MC. ADJUSTMENT - With the band selector switch in position for operation on band no. 3. and the receiver and signal generator both set at 5.2 mc. the procedure outlined above is repeated. The oscillator trimmer is found on the rear coil can, and is located to the right of the red painted trimmer. The antenna preselector and interstage coil trimmers are located in the same positions on the corresponding shield cans.

The signal generator is set at 1.7 mc. and the signal tuned in on the dial. The padder condenser for this band is adjusted for maximum gain while the gang tuning condenser is rocked slightly to the right and left. The 5.2 mc. adjustment should then be rechecked. The 1.7 mc. Padder is located on the sub-base on which the gang tuning condenser is mounted and is the left hand one at the group of three found here.

1400 KC. ADJUSTMENT - The band selector switch is set in position for operation on the no. 4 band. The receiver and signal generator are both set at 1400 kc. and the procedure outlined above is repeated. The oscillator trimmer is found on the rear coil can, and is located diagonally opposite the red painted trimmer. The other trimmers for this band are located in similar positions on the corresponding coil cans.

The signal generator is set at 600 kc. and the signal tuned in on the dial. The padder condenser for this band is adjusted for maximum response while the gang tuning condenser is rocked slightly to the right and left. The 1400 kc. adjustment should then be rechecked. The 600 kc. padder is located on the sub-panel on which the gang tuning condenser is mounted and is the center of the three located at this point.

340 KC. ADJUSTMENT - The band selector switch is set in position for operation on band no. 4. The receiver and generator are both tuned to 340 kc. and the procedure outlined above is repeated. The oscillator trimmer is located on the rear coil can. It is the one directly behind the trimmer marked in red. The other trimmers for this band are located in similar positions on the corresponding shield cans.

The signal generator is set at 140 kc. and the signal is tuned in on the dial. The padder condenser for this band is adjusted for maximum response while the gang tuning condenser is rocked slightly to the right and left. The 340 kc. adjustment should then be rechecked. The 140 kc. padder is located on the sub-panel on which the tuning condenser is mounted and is the right hand one of this group.

VOLTAGE TABLE

TUBE	FUNCTION	HEATER	SCR.	SUPPR.	OSC.PL.	CATH.	PLATE
6K7	Preselector	5.1	98.0	1.2		1.2	98.0
6A7	det.-osc.	4.8		100.0	78.0	1.2	196.0
6K7	1st. i.f.	5.0	187.0	8.0		8.0	187.0
6K7	2nd i.f.	5.3	187.0	2.2		2.2	187.0
6H6	diode det. avc						
6C5	1st audio	5.2				1.6	50.0
43)							
43)	audio output	21.0	98.0	14.0		14.0	120.0
43)							
43)							
6C5	Shadowgraph control	4.8					92.0
25Z5)	rectifiers	24.0					112.0
25Z5)							
6K7	M.S.C.	5.2					

MODEL 514M
Schematic

GARC

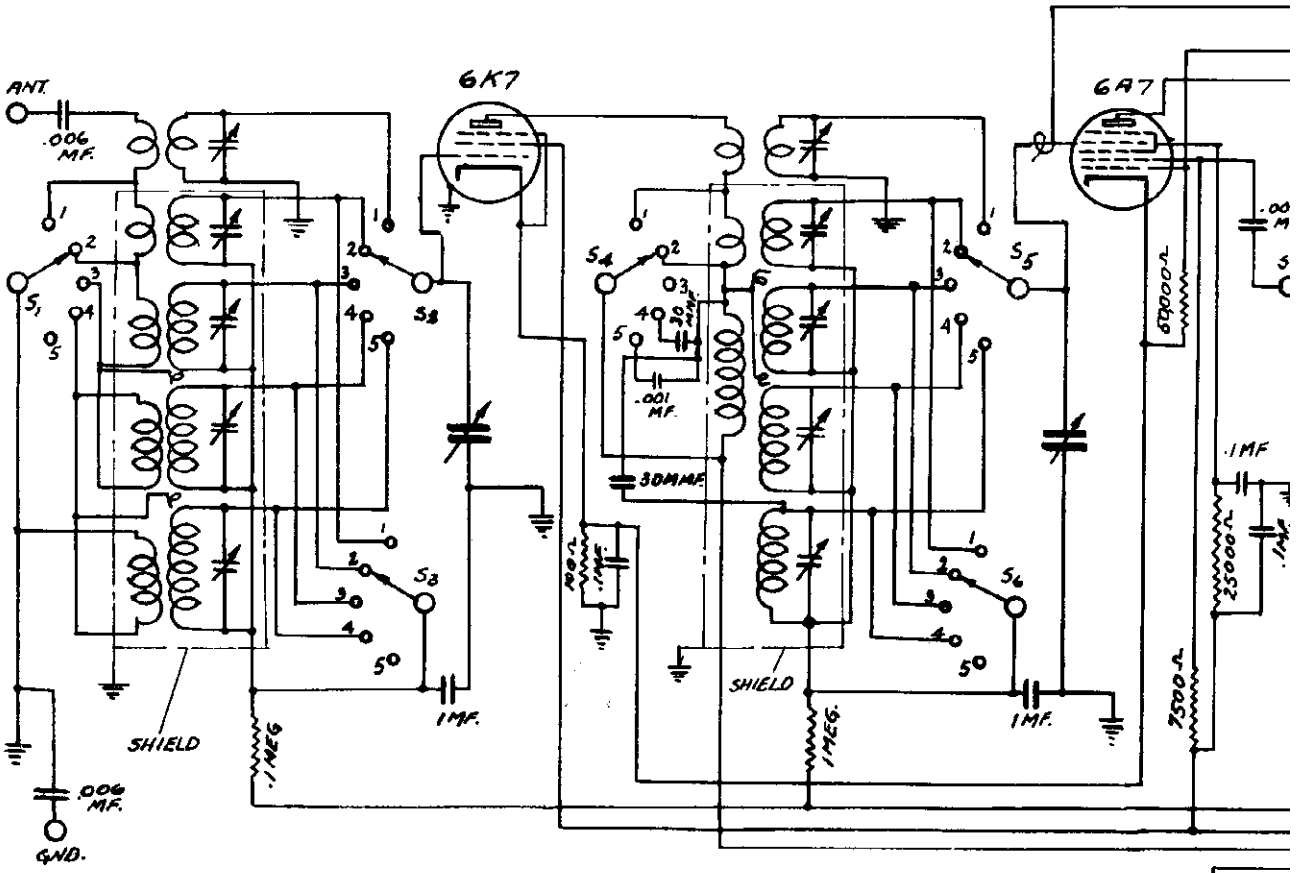

SWITCH LEGEND

1-ULTRA SHORT WAVE	36 M.C. - 18 M.C.	
2-SHORT WAVE	18 MC. - 5.2 M.C.	
3-POLICE-AMATEUR-AIRCRAFT	5.2 MC. - 1.6 M.C.	
4-BROADCAST	1600 KC. - 540 KC.	
5-LONG WAVE	348 KC. - 142 K.C.	

IF PEAK 456 KC

S1, S2, S3, S4, S5, S6, S7, S8, S9, S10 — ON COMMON SHAFT

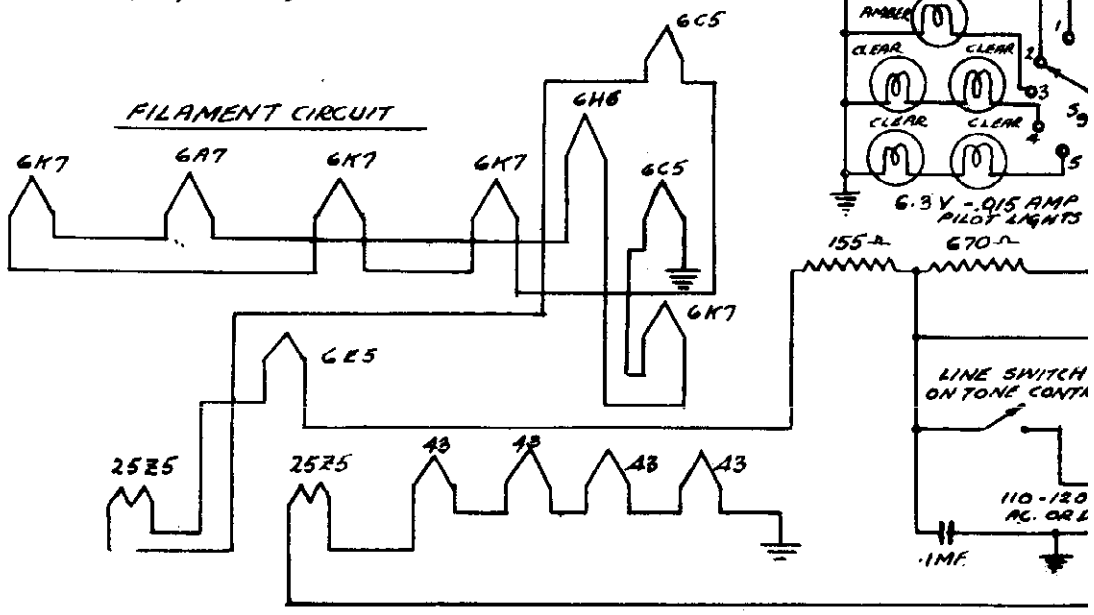

©John F. Rider, Publisher

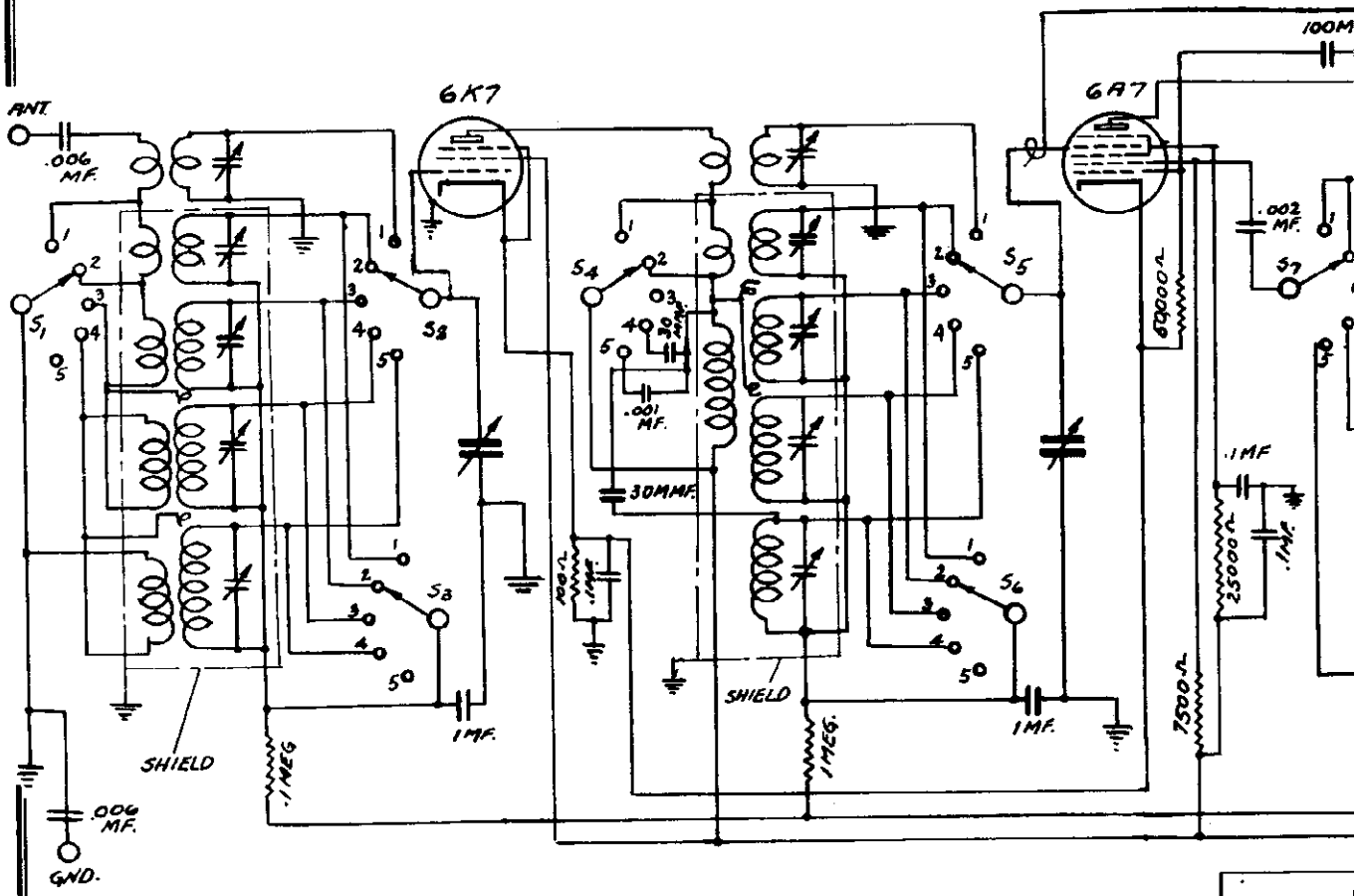

SWITCH LEGEND

1 - ULTRA SHORT WAVE	36 M.C. - 18 M.C.
2 - SHORT WAVE	18 M.C. - 5.2 M.C.
3 - POLICE - AMATEUR - AIRCRAFT	5.2 M.C. - 1.6 M.C.
4 - BROADCAST	1600 KC. - 540 KC.
5 - LONG WAVE	343 KC. - 142 K.C.

IF PEAK 456 KC.

S1, S2, S3, S4, S5, S6, S7, S8, S9, S10 — ON COMMON SHAFT

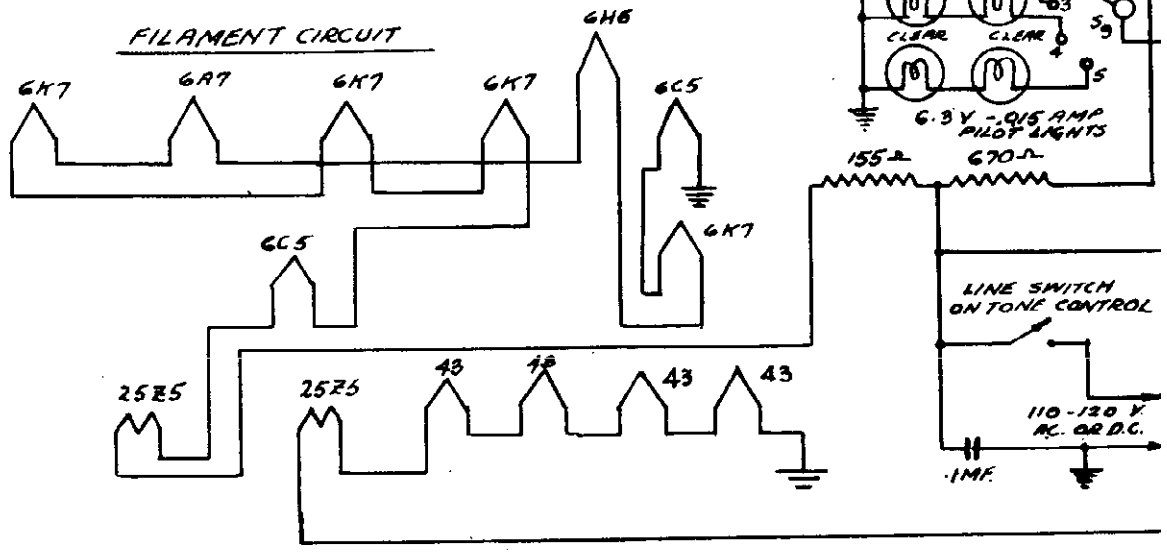

©John F. Rider, Publisher

ADIO CORP.

MODEL 514
Schematic

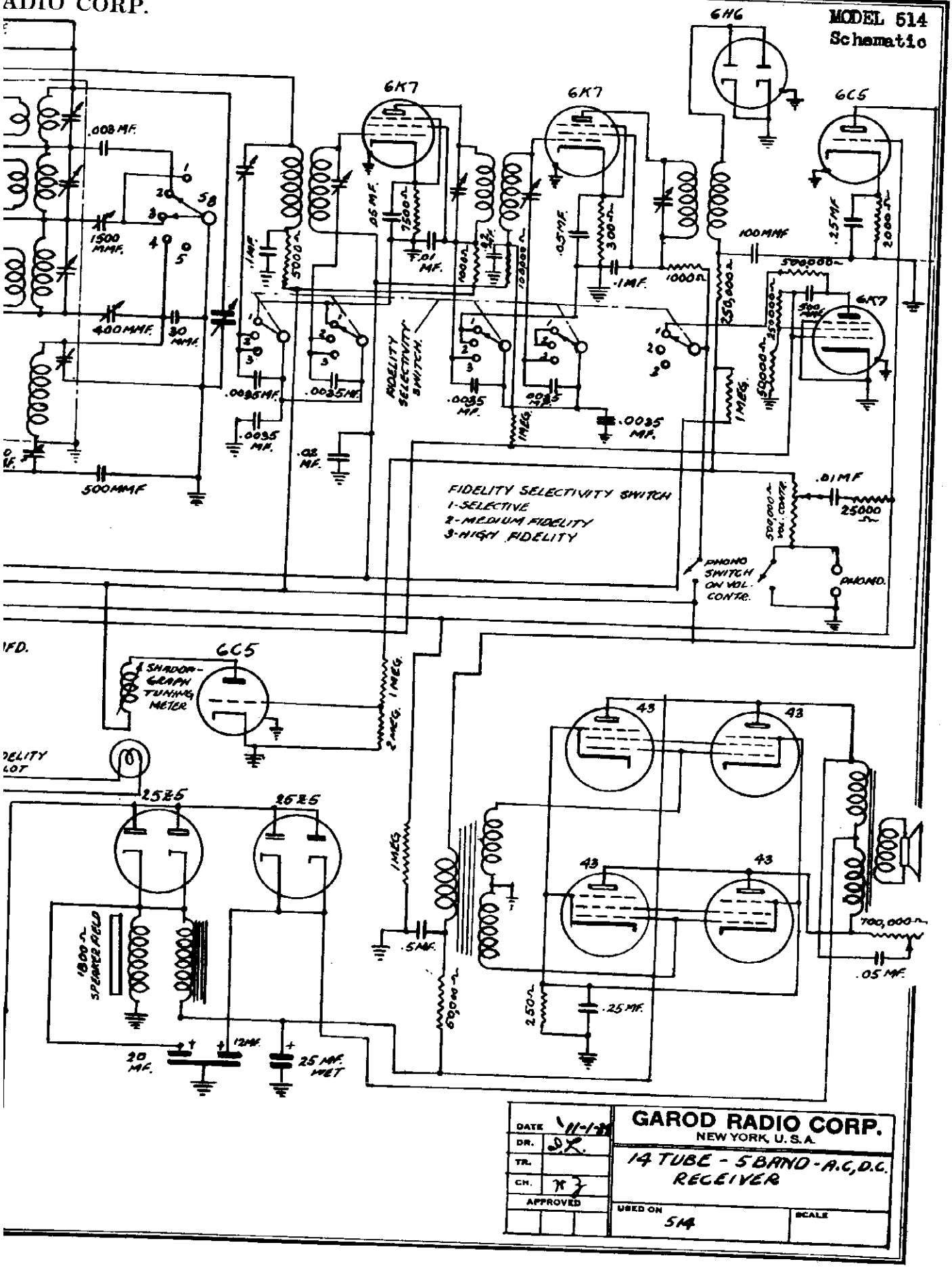

DATE	11-1-38	GAROD RADIO CORP. NEW YORK, U.S.A.
DR.	JX.	14 TUBE - 5 BAND - A.C, D.C. RECEIVER
TR.		
CH.	JZ	
APPROVED		USED ON 514 — SCALE

MODEL 514M
Schematic

GARC

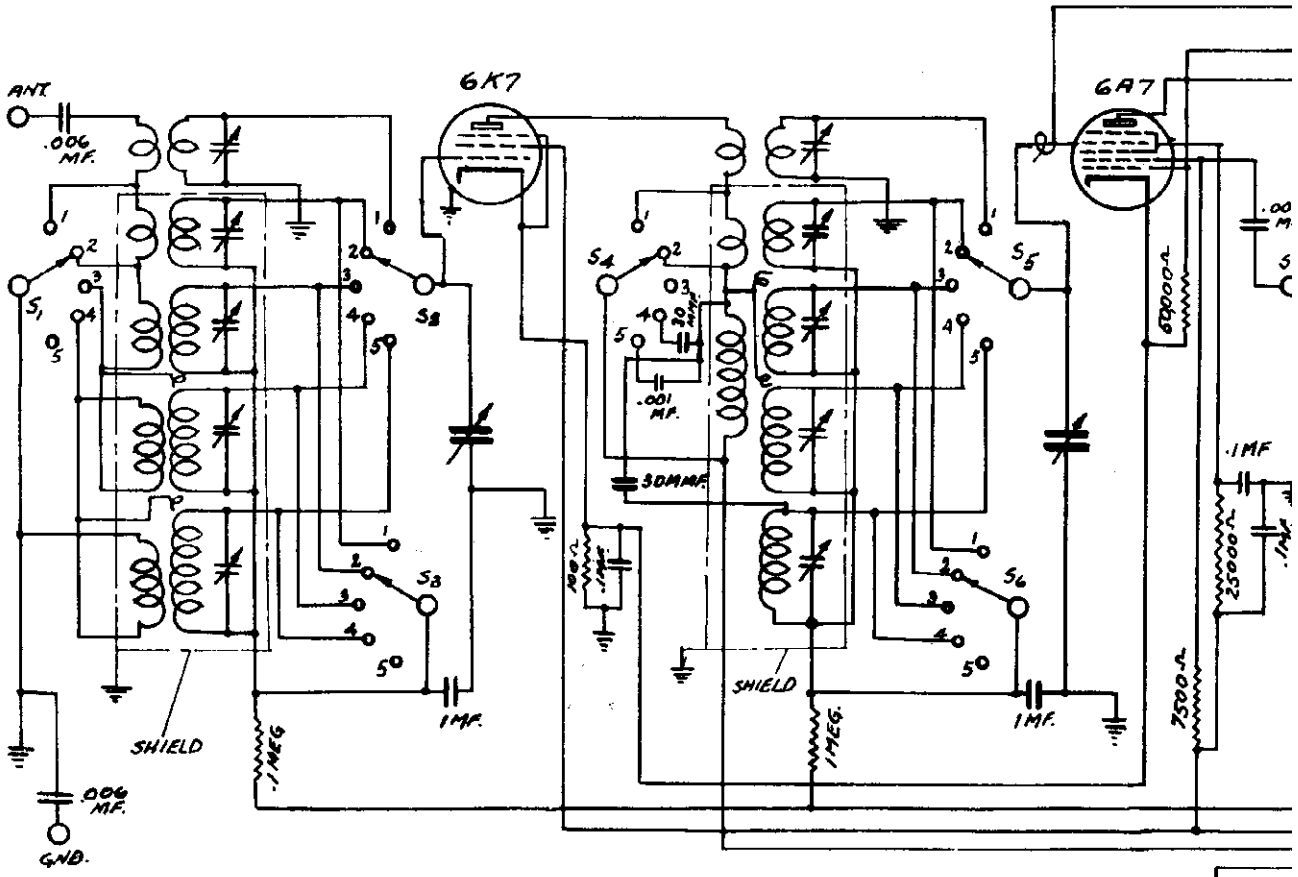

SWITCH LEGEND

1- ULTRA SHORT WAVE	36 M.C. - 18 M.C.
2- SHORT WAVE	18 MC - 5.2 M.C.
3- POLICE - AMATEUR - AIRCRAFT	5.2 MC. - 1.6 M.C.
4- BROADCAST	1600 KC. - 540 KC.
5- LONG WAVE	343 KC. - 142 K.C.

IF PEAK 456 KC

S1, S2, S3, S4, S5, S6, S7, S8, S9, S10 — ON COMMON SHAFT

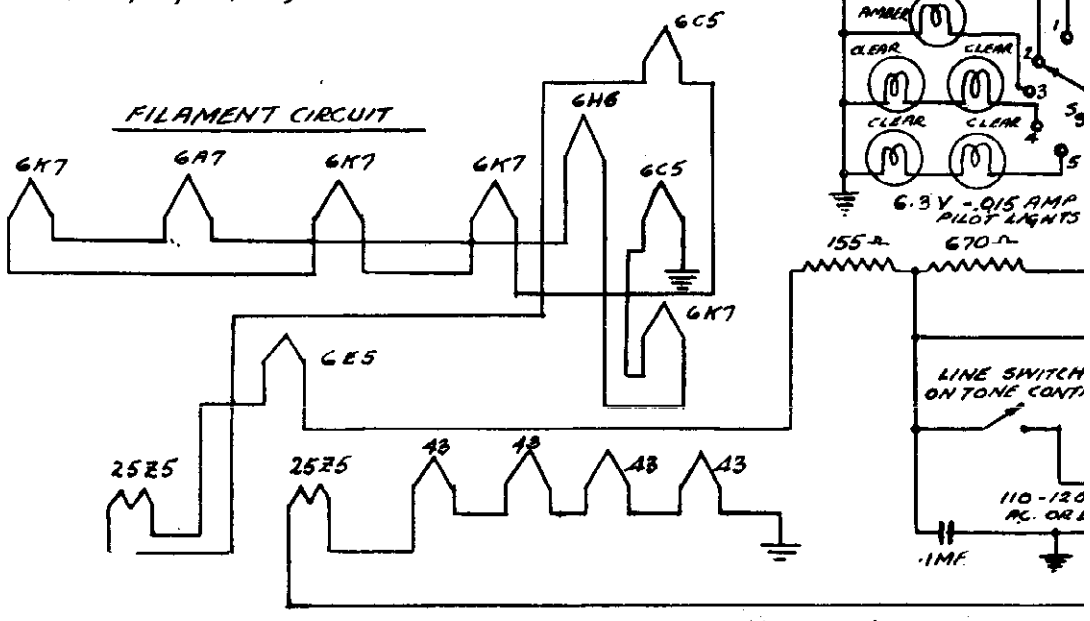

©John F. Rider, Publisher

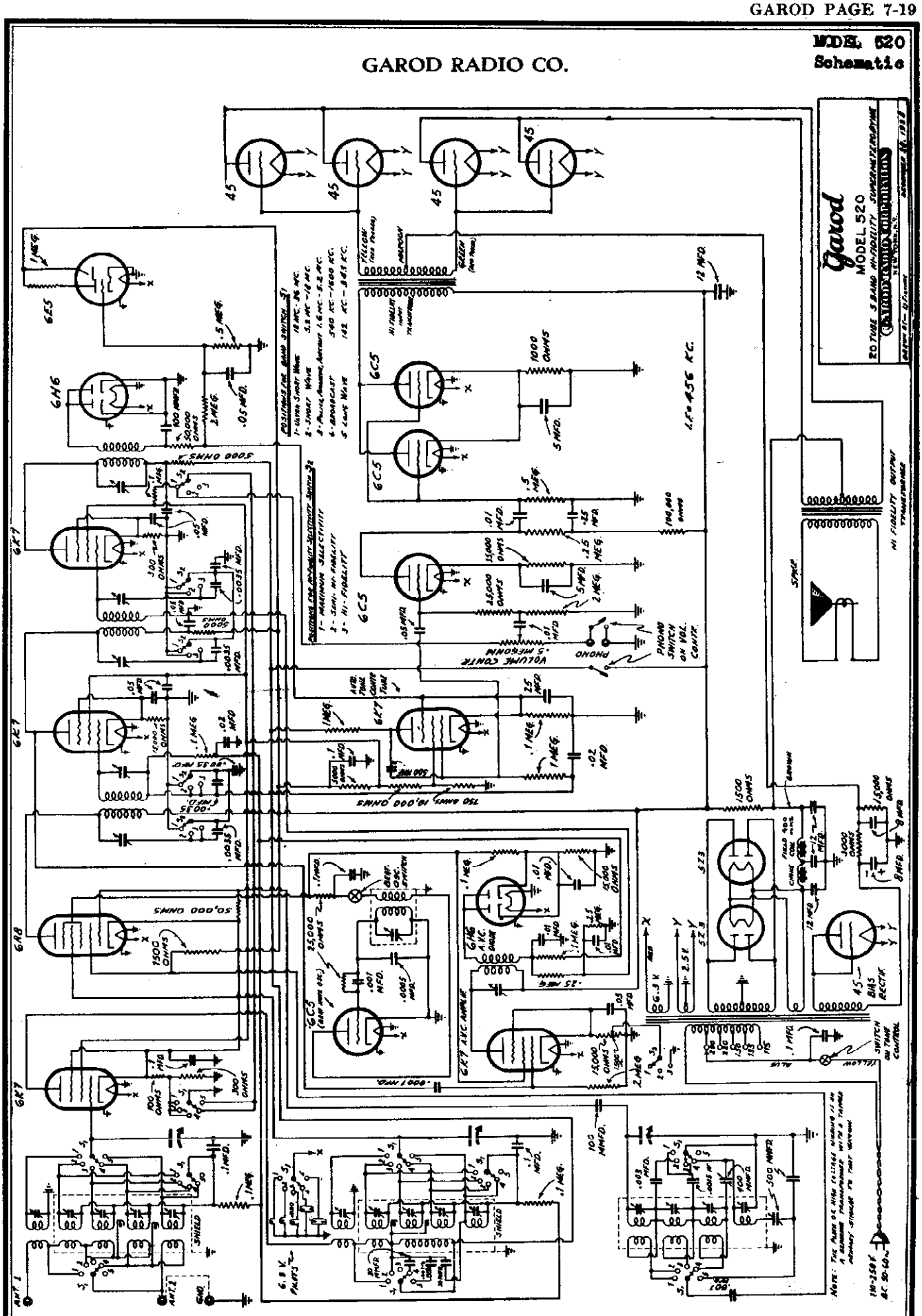

©John F. Rider, Publisher

MODEL 520
Alignment
Voltage, Socket
Trimmers

GAROD RADIO CORP. (New Co.)

TOP VIEW OF CHASSIS SHOWING LOCATION OF ALIGNING TRIMMERS

1 BAND TRIMMERS UNDER CHASSIS

TOP VIEW OF CHASSIS SHOWING LOCATION OF TUBES

AUDIO OUTPUT AND RECTIFIER TUBES ARE IN POWER SUPPLY CHASSIS.

VOLTAGE TABLE

TUBE	FUNCTION	H.T.R	PLATE	SCR.GR.	SUPPR.GR.	CATH.	OSC.PL.
6K7	preselector	6	250	95	5	5	---
6A8	det.-osc.	6	250	95	---	5	220
6K7	1st i.f. amp.	6	200	95	10	10	---
6K7	2nd i.f. amp.	6	225	95	A	A	---
6H6	diode det.	6	---	---	---	0	---
6C5	1st audio	6	90	---	---	7	---
6C5	driver	6	250	---	---	9	---
45's	audio output	2.2	290	---	---		---
6K7	A.V.C.	6	10	7	0	0	---
6C5	a.v.c. diode	6	---	---	---	10	---
6K7	a.v.c. amp.	6	250	95	9	9	---
6E5	tuning indicator	6	250 (target)	---	---	0	---
5Z3	rectifier	4.3	---	---	---	---	---
5Z3							
45	grid bias rectifier	2.2	75	---	---	---	---

All voltages measured between socket terminals and chassis. The Antenna is disconnected. The band switch is in the Broadcast position. The High Fidelity switch is in the "Selective" position. The volumeter resistance is 250,000 ohms when measuring plate or screen potentials; and 30,000 ohms when measuring cathode and suppressor potentials. Line voltage: 115 volts. Power consumption: 200 watts.

20 TUBE 5 BAND A.C. HIGH FIDELITY SUPERHETERODYNE RECEIVER.

CIRCUIT

The receiver consists of two separate units, one the power supply and audio output stage and the other the tuned stages and control unit.

Visual tuning is obtained by means of the 6E5 cathode-ray tuning indicator. Resonance is indicated when the darkened area of this tube is narrowest; that is, when the green illuminated area is greatest.

The beat oscillator, used for c.w. reception and for beat note tuning, makes use of a type 6C5 tube.

For power supply, two transformers are used. The plate supply transformer is a separate unit and is tapped for 115, 135, 150, 220 and 250 volts. The filament supply transformer is similarly tapped, and contains all three filament windings, as well as the grid bias winding. Two type 5Z3 tubes are used for rectification, in a full wave parallel connection. Grid bias is obtained by means of a type 45 tube, connected as a half-wave rectifier and fed by a separate winding on the filament transformer. The speaker field is connected in the filter circuit.

ALIGNMENT PROCEDURE

Realignment of this receiver should not be attempted except by an experienced serviceman and only after all other possible causes of faulty operation have first been thoroughly investigated. An accurately calibrated signal generator which will cover the necessary wave bands is required. Either a suitable output meter or the cathode-ray tuning indicator may be used for indicating the effects of adjustments. It is necessary, in all of the ensuing procedure, that the signal generator be attenuated as much as possible.

I.F. ADJUSTMENT - The i.f. transformers are housed in the polished metal shield on the chassis. The location of these transformers is indicated in the accompanying diagram. The trimmers are on the tops of the transformer cans. The first and second i.f. transformers have two trimmers each and the detector coupling transformer has only one trimmer. These trimmers are adjusted at 456 kc. for maximum gain. In making this adjustment, the oscillator (rear) section of the tuning condenser should be short-circuited and the signal generator connected between the grid cap of the 6A8 and the ground post of the receiver. The selectivity switch should of course be in the high selectivity position.

SHORT WAVE BAND - With the output from the signal generator connected across the aerial and ground terminals of the receiver, and the volume control in position for maximum volume, the oscillator trimmer for this band is adjusted for maximum response as indicated by the 6E5. This adjustment must be made with the dial set at exactly 17 mc., otherwise the calibration will be off. The series padder for this band should then be adjusted by setting the signal generator at a frequency of 5.5 megacycles and tuning the signal in on the receiver. The tuning condenser is rotated slightly back and forth as the padder screw is adjusted for maximum output. The 17 mc. adjustment should then be re-checked. If the dial calibration is off, the procedure should be repeated again.

ULTRA SHORT WAVE BAND - The trimmers for this band are adjusted at 36 megacycles in the manner described above. They are located on the under side of the chassis and are not shown on the chassis layout diagram. There are only two trimmers for this band, the oscillator operating on harmonics of the short wave band.

POLICE BAND ADJUSTMENT - The trimmers for this band are adjusted at 4.8 megacycles in the manner described and the series padder at 1.7 mc. exactly as indicated in the SHORT WAVE BAND ADJUSTMENT procedure.

BROADCAST BAND - The adjustments for this band are as described above. The trimmers are adjusted at 1400 kc. and the padder at 600 kc.

LONG WAVE BAND - The adjustments for this band are made in the prescribed manner, the trimmers being adjusted at 340 kc. and the padder at approximately 150 kc.

A.V.C. AMPLIFIER ADJUSTMENT - The a.v.c. has a separate amplifier which is tuned as follows: The signal generator is set at 1400 kc. and the signal tuned in on the receiver, as indicated by the minimum opening in the 6E5 beam. The a.v.c. trimmer is then adjusted to give the WIDEST opening in the beam. The receiver is then carefully retuned and the adjustment repeated.

BEAT NOTE OSCILLATOR ADJUSTMENT - A weak unmodulated signal from the signal generator is tuned in on the receiver as indicated by the minimum opening in the 6E5 beam. The beat oscillator switch is then turned on. An audible note should be heard whose pitch may be varied by adjusting the screw on the small square can on the left side of the chassis. This should be so adjusted that when the station is tuned in exactly, no beat is heard (zero beat). If no beat note is audible when first turned on, rotation of this same screw should bring in the note.

©John F. Rider, Publisher

GENERAL ELECTRIC CO.

MODELS A-52, A-55
Schematic, Voltage
Socket, Trimmers

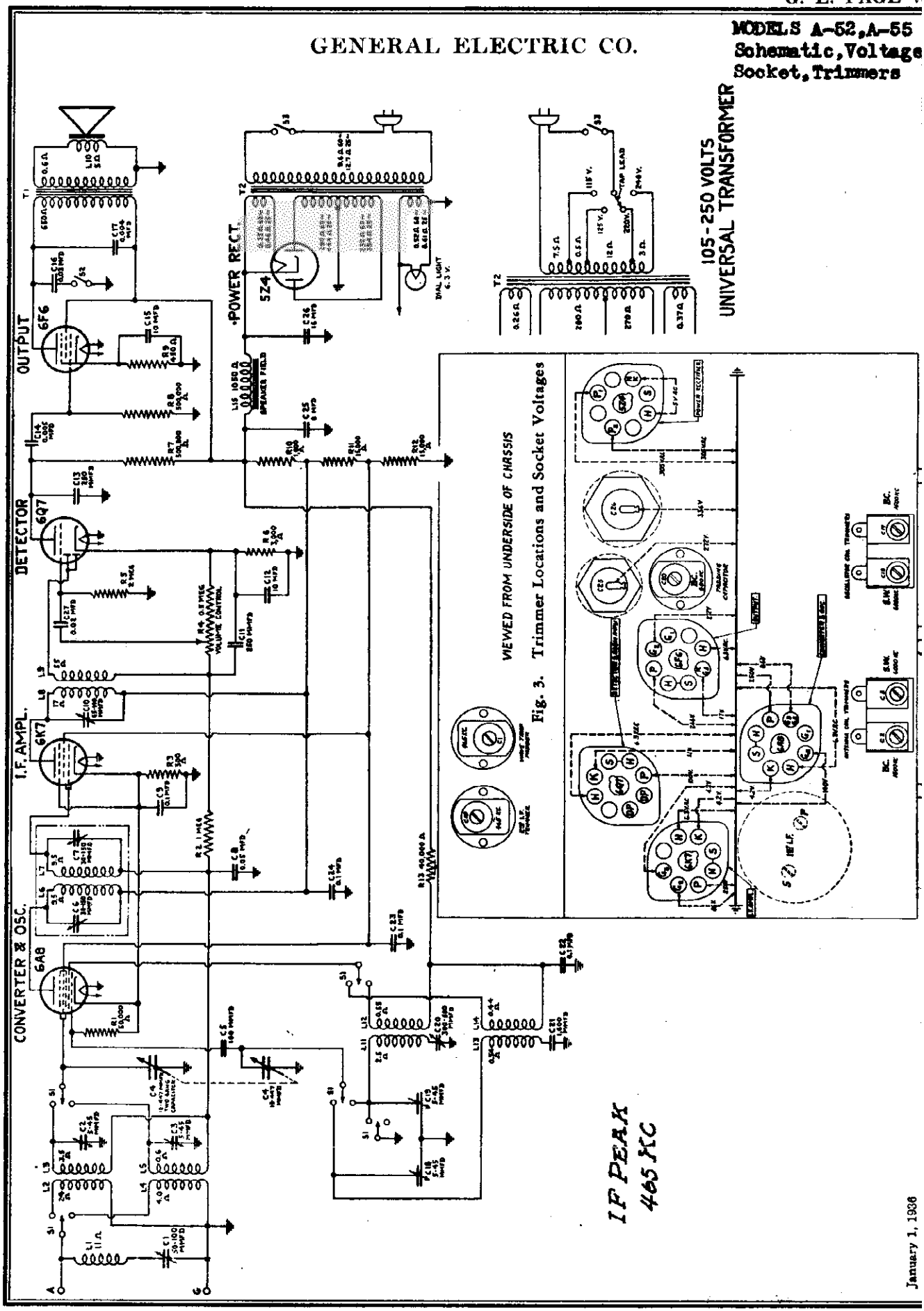

January 1, 1936

©John F. Rider, Publisher

MODELS A-52, A-55
Chassis Wiring Data

GENERAL ELECTRIC CO.

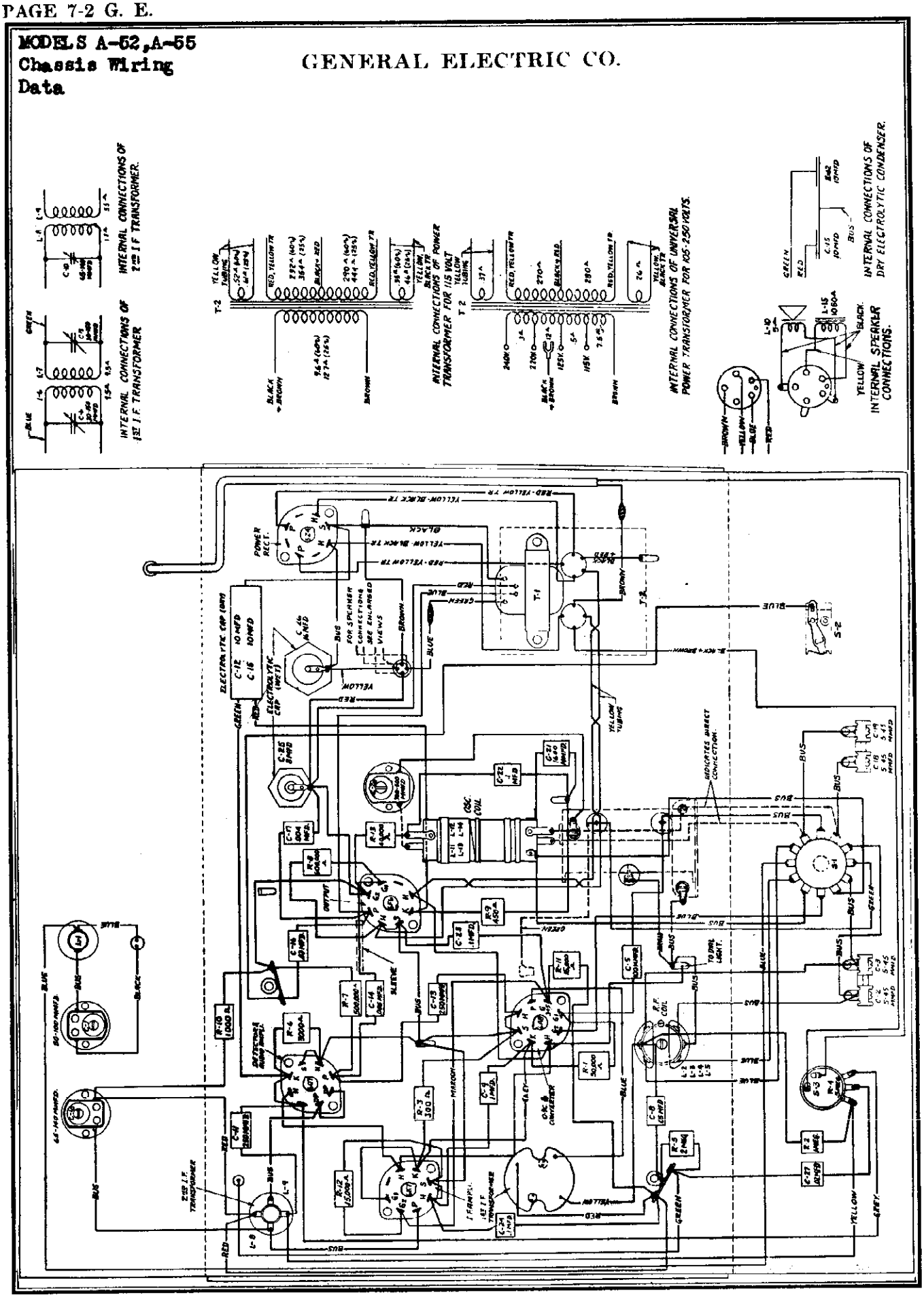

©John F. Rider, Publisher

©John F. Rider, Publisher

MODELS A-52 AND A-55

SERVICE DATA

Dimensions	Model A-52	Model A-55
Height	15⅛ in.	37½ in.
Width	11⅝ in.	20½ in.
Depth	7¾ in.	11½ in.
Weight Packed	19 lb.	44 lb.

Electrical Specifications

Rating Label	Power Supply—Volts	Frequency—Cycles	Power—Watts
A	115	50–60	70
C	115	25–60	75
V	105–120 200–230 115–130 220–250	40–60	75

Tuning Frequency Range

Broadcast . . . . . 540–1720 kc
Short-wave . . . . . 2.3–7.0 mc
Tuning Control Drive Ratio: 5:1

Electrical Power Output

Undistorted . . . . . 1.75 watts
Maximum . . . . . 5 watts

Loudspeaker—Electrodynamic

Cone: Model A-52—8-in. Type.
Model A-55—9-in. Type.
Cone Coil Impedance: 5 ohms at 400 cycles.

Tubes

Oscillator and Converter . . . . 6A8 Pentagrid Converter.
I.F. Amplifier . . . . . 6K7 Triple-Grid Super-Control Amplifier.
Detector, AVC and First Audio Amplifier . . . . 6Q7 Duo-Diode High-mu Triode.
Audio Power Amplifier . . . . . 6F6 Power Amplifier Pentode.
Rectifier . . . . . 5Z4 Full-Wave Rectifier
Dial Lamp . . . . . Mazda No. 46.

DESCRIPTION OF ELECTRICAL CIRCUIT

The signal from the antenna is applied to the control grid of the 6A8 tube through the R.F. coil, the secondary of which is tuned to the incoming signal by the rear section of the main tuning condenser. In the 6A8 tube the incoming signal is combined with the local oscillator signal which is 465 kc. higher in frequency. The local signal is generated by the oscillator section of this tube, and the proper frequency difference is maintained throughout the tuning range by the front section of the tuning condenser in conjunction with the oscillator coil and padding capacitors.

The combination of the two signals produces the intermediate frequency of 465 kc. This particular frequency is chosen to reduce image response and improve short-wave performance. The intermediate frequency amplifier consists of a 6K7 tube and two transformers, the first of which has both primary and secondary tuned.

The second transformer is unshielded and has the primary tuned to 465 kc. The secondary is self-resonant to 465 in conjunction with its associated circuit capacities.

The output of the I.F. amplifier is rectified by the diode section of the 6Q7 tube, providing automatic control bias as well as detection. The audio frequency voltage developed across R-4 is applied through C-27 to the grid of the triode section of this tube from the variable arm of R-4 which constitutes the volume control of the receiver. The d-c voltage developed across R-4 is applied to the control grids of the 6A8 and 6K7 tubes for automatic volume control.

The output of the 6Q7 amplifier section is resistance coupled to the grid of the 6F6 power amplifier pentode. The plate circuit of the 6F6 is suitably matched to the loudspeaker by means of a step-down output transformer.

The tone control circuit consists of a .03 mfd. capacitor which is connected from the plate of the 6F6 tube to ground through the tone control switch. When it is desired to reduce the high frequency output of the receiver the tone control switch is closed by turning the tone control knob to the right.

Plate and grid voltages for all tubes are supplied by the power supply system employing a 5Z4 full-wave rectifier tube and utilizing the loudspeaker field as a filter reactor which together with a suitable network of resistors and capacitors supplies the required voltages and filtering action.

ALIGNMENT PROCEDURE

Before making any adjustments to the R.F. circuits, it is wise to determine the correctness of the existing alignment. This may be done by supplying a signal from the test oscillator to the receiver and inserting a "tuning wand" into the antenna coil. The "tuning wand" consists of a bakelite rod having a brass cylinder attached to one end, and a small core of finely divided iron compacted into the opposite end. By inserting the brass cylinder end into the antenna coil, the inductance is lowered, increasing its resonant frequency. Inserting the iron-filled end into the coil raises its inductance, lowering its resonant frequency. If the circuits are in exact alignment, inserting either end of the tuning wand in the coil will result in a decrease in output. When an increase in signal is obtained with the iron-filled end of the wand at the 1500 kc. point or the 5.0-mc. point, a decrease in resonant frequency of that circuit by increasing the antenna trimmer capacity is indicated. When an increase in signal is obtained with the brass cylinder, a decrease in antenna trimmer capacity is indicated. In the event that the brass cylinder end causes an increase in output at the 580-kc. point when inserted in the antenna coil, it is necessary to increase the oscillator padder capacity, meanwhile rocking the tuning dial. An increase is output, resulting from inserting the iron-filled end, indicates a decrease in oscillator padder capacity.

ALIGNMENT FREQUENCIES

I. F.	Broadcast	Short-wave
465 kc.	580 kc. 1500 kc.	6000 kc.

In order to properly align this receiver, it will be necessary to have the following service tools:

1. Test Oscillator capable of producing the above alignment frequencies.
2. Non-metallic alignment screwdriver.
3. Output meter.

Trimmer locations as well as socket voltages are illustrated in Fig. 2.

(1) I.F. Alignment

The I.F. amplifier should be tuned to 465 kc.; set the test oscillator dial at this frequency. Set the volume control at maximum and short-circuit the antenna and ground leads. Tune the receiver to a point where no signal comes in and ground the chassis.

Connect the test oscillator output between the 6A8 converter tube control grid and the chassis. Connect the output meter across the cone coil of the speaker and adjust the oscillator output until a small deflection is observed in the output meter.

The three I.F. trimmers are adjusted in the following sequence:

1. Primary trimmer on second I.F. transformer.
2. Secondary trimmer on first I.F. transformer.
3. Primary trimmer on first I.F. transformer.

Throughout all adjustments the output should be maintained at a low level by decreasing the test oscillator output as the various stages are brought in line. After these adjustments have been made the same procedure should be repeated as a final check. The I.F. alignment will then be complete.

(2) Wave Trap Alignment

With the test oscillator still tuned to 465 kc. connect its output terminals to the antenna and ground leads of the receiver. Increase the output from the test oscillator until a reading is obtained on the output meter. Then adjust the wave trap trimmer for minimum output.

This adjustment may be changed slightly in actual operation if it is necessary to tune out a code station which is not exactly at 465 kc. This is done by adjusting the wave trap trimmer with the receiver connected to antenna and ground until the offending signal is reduced to a minimum. This adjustment should always be made with the frequency band switch in the broadcast position and with no station tuned in so that extraneous signals may not interfere with the adjustment.

(3) R.F. Alignment

The R.F. and oscillator transformers are aligned at 580, 1500, and 6000 kc. With the tuning condenser plates fully meshed, line up the pointer and dial by adjusting the dial set screws so that the line at the extreme end of the dial is indicated.

BROADCAST BAND

With the band switch in the clockwise position, set the tuning dial to 1500 kc. Set the test oscillator at 1500 kc. and, have its output connected to the antenna and ground leads of the receiver. Adjust the oscillator trimmer for the broadcast band for maximum output. Next, set the R.F. trimmer for maximum output, taking care that the output from the test oscillator is not high enough to overload any part of the set. After these adjustments, tune the set and the test oscillator to 580 kc. Adjust the broadcast padding capacitor for maximum output while rocking the tuning condenser back and forth until maximum output is obtained. The dial setting after this adjustment may not agree exactly with the frequency, but this is not important.

To complete the broadcast band line-up, repeat the adjustment at 1500 kc. as before.

Short-Wave Band

With the frequency band switch in the counterclockwise position, set the receiver dial to 6.0 mc. Set the test oscillator at 6000 kc. and adjust the short-wave oscillator trimmer for maximum output. Next, set the short-wave R.F. trimmer for maximum output. Repeat these adjustments a second time. After aligning the S.W. band, turn the test oscillator to approximately 6930 kc. with the receiver dial still at 6 mc. Increase the test oscillator output until a signal is heard in the neighborhood of 6930 kc. This is the image frequency and if the set has been properly aligned the sensitivity at this point will be much less than at 6000 kc. In the event the image frequency cannot be found, the alignment should be rechecked at 6.0 mc. It will be noticed that the oscillator trimmer will have two positions at which the signal will give maximum output. The position which gives the lower trimmer capacitance obtained by turning the trimmer screw counterclockwise is the proper adjustment.

When these adjustments have been completed the receiver will be in alignment.

RECEIVER ASSEMBLIES PRICES ARE SUBJECT TO CHANGE WITHOUT NOTICE

Stock No.	Description	List Price
RB-024	BOARD—Terminal Board (On Rear Part of Chassis Floor)	$0.10
RB-025	BOARD—Terminal Board (Front Corner Under 1st I.F.)	.10
RB-123	BRACKET—Dial Light and Indicator Bracket	.15
RC-022	CAPACITOR—.004 mfd., 400 Volt Paper (C-17)	.30
RC-029	CAPACITOR—.005 mfd., 400 Volt Paper (C-14)	.30
RC-046	CAPACITOR—.02 mfd., 200 Volt Paper (C-27)	.25
RC-072	CAPACITOR—.05 mfd., 200 Volt Paper (C-5)	.25
RC-068	CAPACITOR—.03 mfd., 400 Volt Paper (C-17)	.25
RC-096	CAPACITOR—.1 mfd., 200 Volt Paper (C-9, C-22)	.30
RC-139	CAPACITOR—.1 mfd., 400 Volt Paper (C-32, C-24)	.35
RC-235	CAPACITOR—100 mmfd., Mica (C-8)	.25
RC-238	CAPACITOR—250 mmfd., Mica (C-11, C-13)	.25
RC-349	CAPACITOR—1600 mmfd., Mica (C-21)	.25
RC-403	CAPACITOR—8 mfd., 350 Volt Wet Electrolytic (C-25)	1.00
RC-409	CAPACITOR—16 mfd., 350 Volt Wet Electrolytic (C-26)	1.25
RC-511	CAPACITOR—Twin 10 mfd., 25 Volt Dry Electrolytic (Gr. C-12, Rd. C-16)	.80
RC-604	CAPACITOR—Twin Trimmer R.F. and Osc. 5-45 mmfd. (C-2 and C-3; C-18 and C-19)	.45
RC-608	CAPACITOR—300-500 mmfd., Oscillator Padder (C-20)	.45
RC-609	CAPACITOR—50-100 mmfd., Wave Trap Trimmer Capacitor (C-1)	.40
RC-610	CAPACITOR—65-140 mmfd., 2nd I.F. Trimmer (C-10)	.40
RC-705	CONDENSER—Two Gang Tuning Condenser (C-4)	2.20
RC-858	CORD—Power Cord and Plug	.65
RC-859	CLAMPS—Mounting Clamp for C-12 and C-15, pkg. of 5	.25
RD-019	DIAL—Dial and Hub	.55
RE-007	ESCUTCHEON—Dial Escutcheon	.50
RF-007	FOOT—Felt Cabinet Foot, pkg. of 4	.15
RG-001	GRID CAP—Pkg. of 5	.10
RK-001	KNOB—Control Knobs, pkg. of 5	.80
RL-112	COIL—R.F. Coil (L-2, L-3, L-4, L-5)	1.25
RL-214	COIL—Oscillator Coil (L-1), L-12, L-13, L-14)	.90
RL-600	COIL—Wave Trap Coil (L-1)	.60
RR-038	RESISTOR—50,000 ohms, ½ Watt, Carbon (R-1), pkg. of 5	.70
RR-039	RESISTOR—3,000 ohms, ½ Watt, Carbon (R-6), pkg. of 5	.60
RR-064	RESISTOR—800,000 ohms, ½ Watt, Carbon (R-8), pkg. of 5	.60
RR-065	RESISTOR—500,000 ohms, ½ Watt, Carbon (R-7), pkg. of 5	.65
RR-067	RESISTOR—1 megohm, ½ Watt, Carbon (R-2), pkg. of 5	.70
RR-068	RESISTOR—3 megohm, ½ Watt, Carbon (R-5), pkg. of 5	.60
RR-155	RESISTOR—1,000 ohms, ½ Watt, Carbon (R-10), pkg. of 5	.55
RR-189	RESISTOR—40,000 ohms, ½ Watt, Carbon (R-13), pkg. of 5	.60
RR-235	RESISTOR—15,000 ohms, 1 Watt, Carbon (R-12), pkg. of 5	$1.00
RR-278	RESISTOR—10,000 ohms, 2 Watt, Carbon (R-11)	.35
RR-324	RESISTOR—300 ohms, ½ Watt, Flexible (R-3), pkg. of 5	.60
RR-339	RESISTOR—450 ohms, 1 Watt, Flexible (R-9), pkg. of 5	.70
RS-200	SOCKET—Eight Pin Tube Socket, pkg. of 5	.75
RS-206	SOCKET—Dial Light Socket	.15
RS-313	SWITCH—Tone Control Switch (S-3)	.30
RS-314	SWITCH—Frequency Band Switch (S-1)	.80
RT-054	TRANSFORMER—Power Transformer—105/125 Volt, 50-60 Cycles (T-2)	5.60
RT-055	TRANSFORMER—Power Transformer—105/125 Volt; 25-60 Cycles (T-3)	8.30
RT-056	TRANSFORMER—Power Transformer—105/130; 200/250 Volt, 40-60 Cycles (T-2)	7.00
RT-215	TRANSFORMER—First I.F. Transformer Assembled (L-6, L-7, C-6, C-7)	2.00
RT-216	TRANSFORMER—Second I.F. Transformer Coils (L-8, L-9)	.55
RT-400	TRANSFORMER—Output Transformer (T-1)	1.10
RV-008	VOLUME CONTROL—400,000 Ohm Potentiometer and Power Switch (R-4, S-2)	1.10
RW-101	WASHER—Felt Spacing Washer for Control Shafts, pkg. of 10	.45
RX-009	SCREW ASSEMBLY—Chassis Mounting Screw Assembly, pkg. of 3	.25
RX-011	SCREW ASSEMBLY—Tuning Condenser, Mounting Assembly, pkg. of 4	.40

SPEAKER ASSEMBLY A-52

Stock No.	Description	List Price
RC-005	CONE—8-in. Type Speaker Cone and Cone Coil (L-10)	1.25
RP-012	PLUG—Female Speaker Plug	.20
RP-013	PLUG—Male Speaker Plug	.20
RS-023	SPEAKER—8-in. Type Reproducer, Complete	5.80
RX-010	SCREW ASSEMBLY—Speaker Mounting Rosette Screws, Nuts and Washers, set of 4	

SPEAKER ASSEMBLY A-55

Stock No.	Description	List Price
RC-006	CONE—9-in. Type Speaker Cone and Coil (L-10)	1.35
RP-012	PLUG—Female Speaker Plug	.20
RP-013	PLUG—Male Speaker Plug	.20
RS-024	SPEAKER—9-in. Type Reproducer, Complete	5.95
RX-012	SCREW ASSEMBLY—Speaker Mounting Bolts and Washer, set of 2	.10

AC-DC SUPERHETERODYNE

MODEL A-54

Physical Specifications

Model	A-54
Height	9¾ in.
Width	14 in.
Depth	7 in.
Weight Packed	16 lb.

Electrical Specifications

Power Supply—Volts	Frequency Cycles or A.C.	Power Watts
105–130 A.C. or D.C.	25-133	60 max.

Tuning Frequency Range

Broadcast	540-1720 kc.
Short-wave	2.3-7.0 mc.
Tuning Control Drive Ratio:	5:1

Electrical Power Output

Undistorted	0.4 watt
Maximum	1.1 watts

Loud-speaker—Electrodynamic

Cone: 6½ in. type
Cone Coil Impedance 5.5 ohms at 400 cycles.

Tubes

Oscillator and Converter	6A8 Pentagrid Converter.
I.F. Amplifier	6K7 Triple-Grid Super-Control Amplifier.
Detector, AVC and First Audio Amplifier	6Q7 Duo-Diode High-mu Triode.
Audio Power Amplifier	25A6 Power Amplifier Pentode.
Rectifier	25Z6 Rectifier.
Dial Lamp	Mazda No. 46.

DESCRIPTION OF ELECTRICAL CIRCUIT

The signal from the antenna is applied to the control grid of the 6A8 tube through the R.F. transformer, the secondary of which is tuned to the incoming signal by the rear section of the main tuning condenser. In the 6A8 tube the incoming signal is combined with the local oscillator signal which is 465 kc. higher in frequency. The local signal is generated by the oscillator section of this tube, and the proper frequency difference is maintained throughout the tuning range by the front section of the tuning condenser in conjunction with the oscillator coils and padding capacitors.

The combination of the two signals produces the intermediate frequency of 465 kc. This particular frequency is chosen to reduce image response and improve short-wave performance. The intermediate frequency amplifier consists of a 6K7 tube and two transformers, both of which have tuned primaries and secondaries.

The output of the I.F. amplifier is rectified by the diode section of the 6Q7 tube, providing automatic volume control bias as well as detection. The audio frequency voltage developed across R-7 is applied through C-18 to the grid of the triode section of this tube from the variable arm of R-7 which constitutes the volume control of the receiver. The D.C. voltage developed across R-7 is applied to the control grids of the 6A8 and 6K7 tubes for automatic volume control.

The output of the 6Q7 amplifier section is resistance coupled to the grid of the 25A6 power amplifier pentode. The plate circuit of the 25A6 is suitably matched to the loud-speaker by means of a step-down output transformer.

The tone control circuit consists of a .05-mfd. capacitor which is connected from the plate of the 25A6 tube to "B-" lead through the tone control switch. When it is desired to reduce the high frequency output of the receiver the tone control switch is closed by turning the tone control knob to the right.

When the receiver is used on alternating current, plate and grid voltages and loud-speaker field current are supplied by a 25Z6 rectifier tube and its associated filter circuits. Each section of the 25Z6 tube acts as a separate half-wave rectifier, one for speaker field current, and one for plate and grid voltages, and each section has its own filter circuit.

When the receiver is used on a D.C. supply the 25Z6 rectifier tube remains in the circuit and serves two purposes. If the power cord should be plugged in with incorrect polarity, the 25Z6 tube protects the filter condensers from damage. On correct D.C. polarity the 25Z6 tube aids the filter circuits in smoothing the supply, thus minimizing line noise.

The heaters of all tubes and the dial light with its shunt ballast resistor (the 30-ohm section of R12) are all in series and are furnished current from the power line through a dropping resistor (the 150-ohm section of R12).

Note that the chassis is not connected directly to either the ground lead or to the power supply, but is by-passed to the "B-" lead by various condensers.

ALIGNMENT PROCEDURE

Before making any adjustments to the R.F. circuits, it is wise to determine the correctness of the existing alignment. This may be done by supplying a signal from the test oscillator to the receiver and inserting a "tuning wand" into the antenna coil. The "tuning wand" consists of a bakelite rod having a brass cylinder attached to one end, and a small core of finely divided iron compacted into the opposite end. By inserting the brass cylinder end into the antenna coil, the inductance is lowered, increasing its resonant frequency. Inserting the iron-filled end into the coil raises its inductance, lowering its resonant frequency. If the circuits are in exact alignment, inserting either end of the tuning wand in the coil will result in a decrease in output. When an increase in signal is obtained with the iron-filled end of the wand at the 1500-kc. point or the 6.0-mc. point, a decrease in resonant frequency of that circuit by increasing the antenna trimmer capacity is indicated. When an increase in signal is obtained with the brass cylinder, a decrease in antenna trimmer capacity is indicated. In the event that the brass cylinder end causes an increase in output at the 580-kc. point when inserted in the antenna coil, it is necessary to increase the oscillator padder capacity, meanwhile rocking the tuning dial. An increase in output, resulting from inserting the iron-filled end, indicates a decrease in oscillator padder capacity.

ALIGNMENT FREQUENCIES

I.F.	Broadcast	Short-wave
465 kc.	580 kc.	6000 kc.
	1500 kc.	

In order to properly align this receiver, it will be necessary to have the following service tools:

1. Test Oscillator capable of producing the above alignment frequencies.
2. Non-metallic alignment screwdriver.
3. Output meter.

Trimmer locations as well as socket voltages are illustrated in Fig. 3.

(1) *I.F. Alignment*

The I.F. amplifier should be tuned to 465 kc.; set the test oscillator dial at this frequency. Set the volume control at maximum and short-circuit the antenna and ground leads. Tune the receiver to a point where no signal comes in.

Connect the test oscillator output between the 6A8 converter tube grid (with the grid cap on) and the chassis. Connect the output meter across the cone coil of the speaker and adjust the oscillator output until a small deflection is observed in the output meter.

The four I.F. trimmers are adjusted in the following sequence:

1. Secondary trimmer on second I.F. transformer.
2. Primary trimmer on second I.F. transformer.
3. Secondary trimmer on first I.F. transformer.
4. Primary trimmer on first I.F. transformer.

Throughout all adjustments the output should be maintained at a low level by decreasing the test oscillator output as the various stages are brought in line. After these adjustments have been made, the same procedure should be repeated as a final check. The I.F. alignment will then be complete.

(2) *R.F. Alignment*

The R.F. and oscillator transformers are aligned at 580, 1500, and 6000 kc. With the tuning condenser plates fully meshed, line up the pointer and dial by adjusting the dial set screws so that the line at the extreme end of the dial is indicated.

(a) *Broadcast Band*

With the band switch in the clockwise position, set the tuning dial to 1500 kc. Set the test oscillator at 1500 kc. and adjust the oscillator trimmer for the broadcast band for maximum output. Next, set the R.F. trimmer for maximum output, taking care that the output from the test oscillator is not high enough to overload any part of the set. After these adjustments, tune the set and the test oscillator to 580 kc. Adjust the broadcast padding capacitor for maximum output while rocking the tuning condenser back and forth until maximum output is obtained. The dial setting after this adjustment may not agree exactly with the frequency, but this is not important.

To complete the broadcast band line-up, repeat the adjustment at 1500 kc. as before.

(b) *Short-wave Band*

With the frequency band switch in the counterclockwise position, set the receiver dial to 6.0 mc. Set the test oscillator at 6000 kc. and adjust the short-wave oscillator trimmer for maximum output. Next, set the short-wave R.F. trimmer for maximum output. Repeat these adjustments a second time. After aligning the S. W. band, turn the test oscillator to approximately 6930 kc. with the receiver dial still at 6.0 mc. Increase the test oscillator output until a signal is heard in the neighborhood of 6930 kc. This is the image frequency and if the set has been properly aligned the sensitivity at this point will be much less than at 6000 kc. In the event the image frequency cannot be found, the alignment should be rechecked at 6.0 mc. It will be noticed that the oscillator trimmer will have two positions at which the signal will give maximum output. The position which gives the lower trimmer capacitance obtained by turning the trimmer screw counterclockwise is the proper adjustment.

When these adjustments have been completed the receiver will be in alignment.

REPLACEMENT PARTS

PRICES ARE SUBJECT TO CHANGE WITHOUT NOTICE

Stock No.	Description	List Price
RB-021	BOARD—Terminal Board (Under 1st I.F. Transformer)	$0.10
RB-022	BOARD—Terminal Board (On Sub Chassis Partition)	.10
RB-023	BOARD—Terminal Board (On Chassis rear wall)	.10
RB-122	BRACKET—Dial Light Bracket and Indicator	.25
RC-024	CAPACITOR—.005 mfd., 200 V. Paper (C32), pkg. of 5	.75
RC-037	CAPACITOR—.01 mfd., 250 V. A.C. Paper (C31), pkg. of 5	.75
RC-040	CAPACITOR—.01 mfd., 400 V. Paper (C27)	.25
RC-068	CAPACITOR—.03 mfd., 200 V. Paper (C18, C24)	.25
RC-072	CAPACITOR—.05 mfd., 200 V. Paper (C10)	.25
RC-091	CAPACITOR—.05 mfd., 400 V. Paper (C14, C26)	.30
RC-096	CAPACITOR—.1 mfd., 200 V. Paper (C19)	.30
RC-098	CAPACITOR—.1 mfd., 440 V. Paper (C20, C21)	.35
RC-110	CAPACITOR—.15 mfd., 200 V. Paper (C11)	.30
RC-130	CAPACITOR—.25 mfd., 200 V. Paper (C15)	.30
RC-335	CAPACITOR—100 mmfd., Moulded Mica (C5)	.25
RC-288	CAPACITOR—250 mmfd., Moulded Mica (C33, C22)	.25
RC-348	CAPACITOR—1500 mmfd., Mica (C9)	.35
RC-516	CAPACITOR—7 and 10 mfd., 150 and 25 volts Dry Electrolytic (C30, C25)	1.50
RC-524	CAPACITOR—25 and 16 mfd., 150 V. Dry Electrolytic (C38, C29)	2.50
RC-604	CAPACITOR—Twin Trimmer 5-45 mmfd. (C1, C2, or C6, C8)	.45
RC-608	CAPACITOR—Osc. Padder 300-500 mmfd. (C7)	.45
RC-705	CONDENSER—Two Gang Tuning Condenser 16-647 mmfd. (C3, C4)	3.25
RC-857	CORD—Power Cord and Plug	.50
RD-018	DIAL—Dial Scale and Hub	.55
RF-004	FOOT—Chassis Mounting Foot	.15
RF-007	FOOT—Felt Foot (Pkg. of 4)	.15
RG-001	GRID CAP—Pkg. of 5	.10
RK-001	KNOB—Walnut, Black, or Bronze Control Knob (Pkg. of 5)	.50
RL-113	COIL—R.F. Coil (L1, L2, L3, L4)	1.25
RL-214	COIL—Osc. Coil (L5, L6, L7 L8)	.90
RL-309	COIL—Filter Reactor (L15)	1.25
RP-030	PLATE—Asbestos Plate	.10
RR-005	RESISTOR—150 ohms Carbon (R2), pkg. of 5	$0.50
RR-026	RESISTOR—20,000 ohms ½ Watt Carbon (R13), pkg of 5	.50
RR-033	RESISTOR—250 ohms ½ Watt Carbon (R6), pkg of 5	.50
RR-035	RESISTOR—50,000 ohms ½ Watt Carbon (R1), pkg. of 5	.70
RR-064	RESISTOR—150,000 ohms ½ Watt Carbon (R9), pkg. of 5	.50
RR-064	RESISTOR—500,000 ohms ½ Watt Carbon (R10), pkg. of 5	.50
RR-067	RESISTOR—1 megohm ½ Watt Carbon (R3, R8), pkg. of 5	.70
RR-154	RESISTOR—600 ohms ½ Watt Carbon (R11), pkg. of 5	.50
RR-182	RESISTOR—9000 ohms ½ Watt Carbon (R4), pkg. of 5	.75
RR-186	RESISTOR—18,000 ohms ½ Watt Carbon (R5), pkg. of 5	.75
RR-703	RESISTOR—Two-in-one Resistor 150 and 30 ohms (R12)	.50
RS-158	SHIELD—Sub Chassis Partition	.45
RS-200	SOCKET—Eight Pin Tube Socket (Pkg. of 5)	.75
RS-311	SWITCH—Band Switch (S1, S2, S3, S4, S5)	.75
RS-312	SWITCH—Tone Control Switch (S6)	.45
RT-213	TRANSFORMER—First I.F. Transformer Assembled (L9, L10, C19, C13)	1.90
RT-214	TRANSFORMER—Second I.F. Transformer Assembled (L11, L12, C16, C17)	1.50
RT-408	TRANSFORMER—Output Transformer (T1)	2.90
RV-007	VOLUME CONTROL—500,000 ohm Potentiometer and Power Switch (R7, S7)	1.05
RW-101	WASHER—Felt Spacing Washer for Control Shafts (Pkg. of 10)	.45
RX-005	SCREW ASSEMBLY—Chassis Mounting Screws and Cushion (Pkg. of 3)	.25
RX-010	SCREW ASSEMBLY—Speaker Mounting Screw Assembly, (Pkg. of 4)	

SPEAKER ASSEMBLY

RC-994	CONE—6½ in. type Cone and Coil (L13)	$1.00
RP-012	PLUG—Female Speaker Plug	.20
RP-013	PLUG—Male Speaker Plug	.20
RS-022	SPEAKER—6½ in. Type Reproducer Complete	5.85

©John F. Rider, Publisher

GENERAL ELECTRIC CO.

MODEL A-54
Schematic
Voltage
Transformer Data

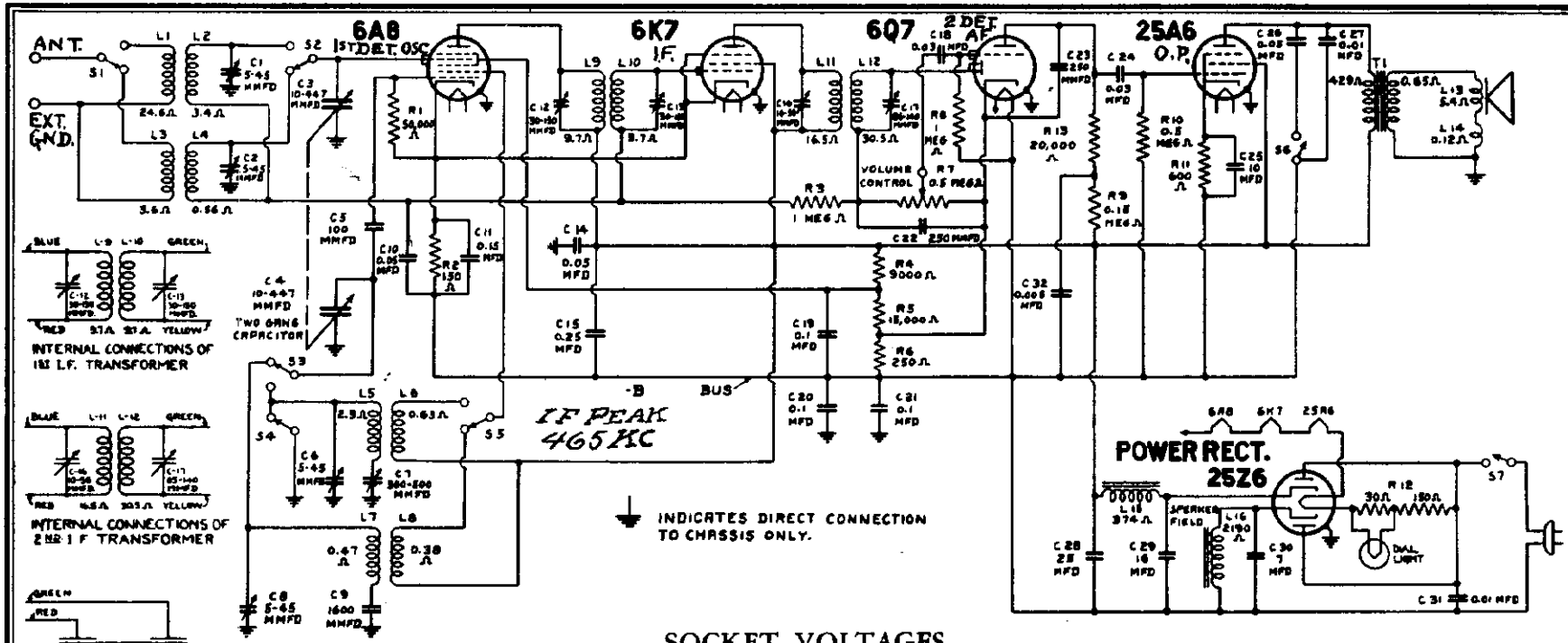

SOCKET VOLTAGES

Power Supply	CATHODE TO "−B" VOLTS D.C.		SCREEN GRID TO "−B" VOLTS D.C.		PLATE TO "−B" VOLTS D.C.		PLATE CURRENT M.A. D C.		HEATER VOLTS	
	AC	DC	AC	DC	AC	DC	AC	DC	AC	DC
6A8 Converter	2.5	2.3	57	51	108	93	1.4	1.1	6.3	6.3
Oscillator					108	93	1.9	1.6		
6K7 I.F. Amplifier	2.5	2.3	108	93	108	93	9.4	8.2	6.3	6.3
6Q7 Detector and A.F. Amplifier	0.9	0.85			53	46	0.2	0.18	6.3	6.3
25A6 Pwr. Amplifier	15	12.8	108	93	98	86	19.4	17.3	25	25
25Z6 Rectifier, "+B"	126	109			(120 A.C.)	120	46	48.5	25	25
Spkr. Field	111	109				120	44	47		

Measured at 120 volts 60 cycles or 120 volts D.C. supply. Dial 1000 kc. No signal input. Voltmeter 1000 ohms per volt; measurements taken on highest scale giving accurate readable deflection. For 25-cycle supply, reduce above values of plate and grid voltages about 5 per cent, except speaker field voltage, which is reduced approximately 18 per cent from its 60-cycle value.

MODEL A-64
Chassis Wiring
Socket, Trimmers

GENERAL ELECTRIC CO.

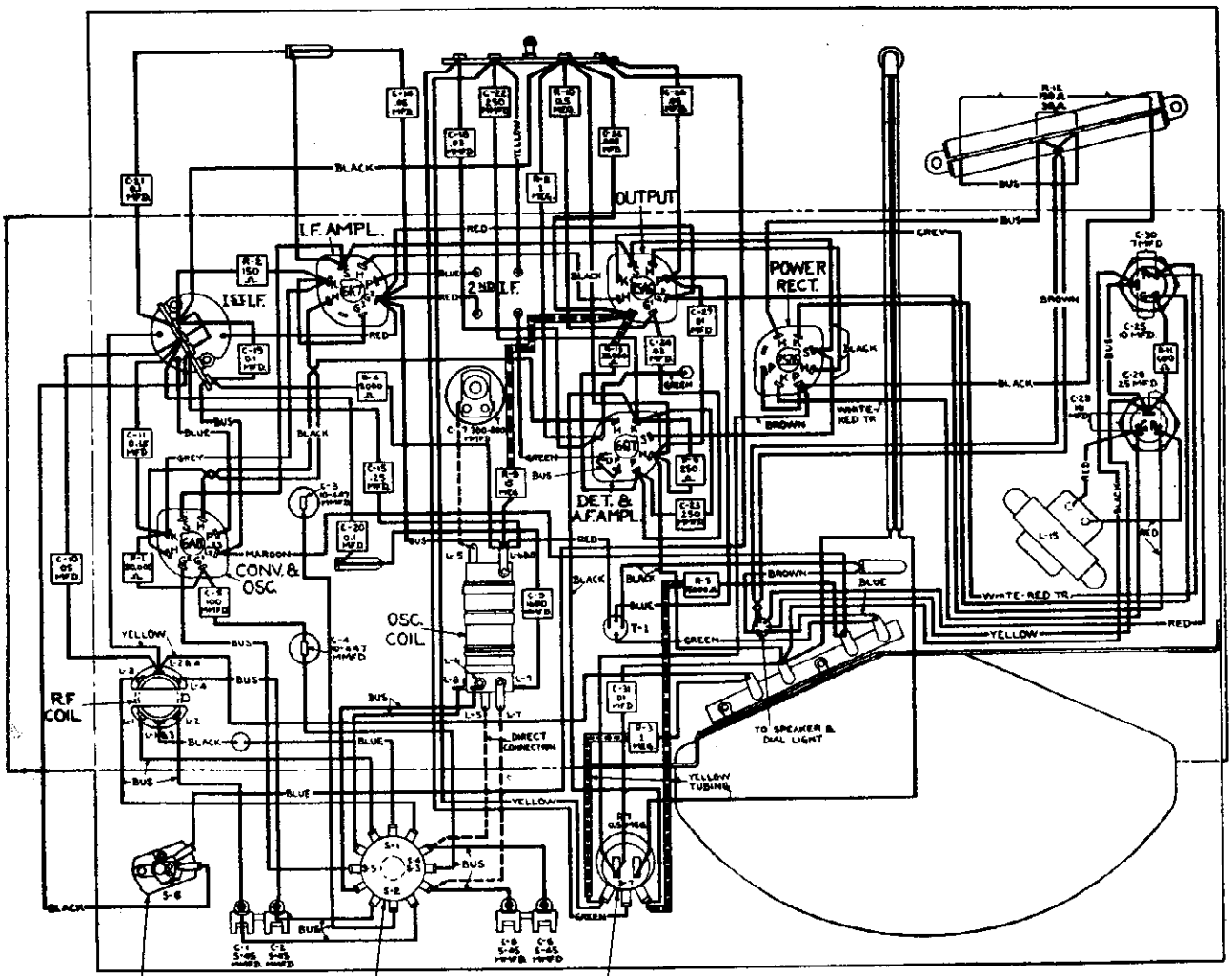

TONE CONTROL — FREQUENCY BAND SWITCH — VOLUME CONTROL & POWER SWITCH

FRONT OF CHASSIS

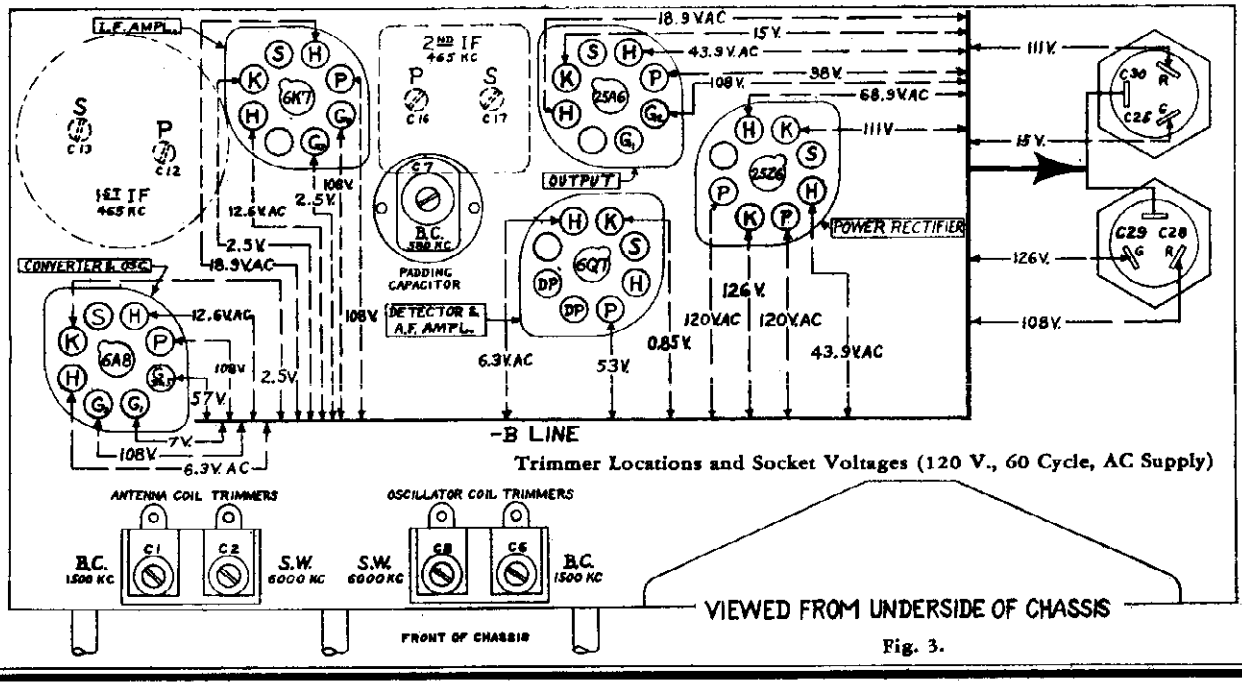

Trimmer Locations and Socket Voltages (120 V., 60 Cycle, AC Supply)

Fig. 3.

©John F. Rider, Publisher

Feb. 1936

6 Tube Automobile Radio — MODEL N-60

SPECIFICATIONS

Power Consumption	7.0 Amperes at 6.0 Volts
Power Output (Undistorted)	3 Watts
Power Output (Maximum)	4 Watts
Tuning Frequency Range	530 to 1650 KC
Intermediate Frequency	175 KC
Speaker	6 inch Dynamic

Circuit

This model is a 6 tube automobile receiver covering the standard wave band. It has a tuning range as shown in the specifications above. The signal is fed through an antenna transformer with tuned secondary into a 6K7 tube which functions as an R.F. amplifier. The output of this tube is fed through another R.F. transformer with tuned secondary into a 6J7 tube which functions as the first detector and oscillator. The oscillating circuit is tuned by the oscillator section of the gang condenser and is always resonant at a frequency 175 KC above the frequency to which the R.F. circuits are tuned.

One stage of I.F. amplification is employed using a 6K7 tube. The primary and secondary of the first I.F. transformer and the primary of the second I.F. transformer are tuned by small trimmer condensers.

A 6Q7 dual diode-triode tube functions as a diode 2nd detector, AVC tube and a one stage audio amplifier. AVC voltage is applied to the control grid circuits of the 6K7 R.F. and I.F. tubes. The manual volume control varies the audio voltage applied to the grid of the 6Q7 tube.

In the output stage a 6F6 tube is employed. A dynamic reproducer is used.

The vibrator in the power unit interrupts the current through the primary of the power transformer. The use of a vibrating interrupter in the primary circuit and a high ratio transformer results in the application of high voltage AC to the rectifier tube plates. The 6X5 full wave rectifier tube, filter choke, and filter condensers convert this high voltage AC into high voltage DC for the plate and screen circuits.

Alignment and Calibration

Misalignment or mistracking of condensers generally manifests itself as broad tuning and lack of volume at portions or all of the standard wave band. The receivers are all properly aligned at the factory with precision instruments and realignment should not be attempted unless all other possible causes of the faulty operation have first been investigated and unless the service technician has the proper equipment.

A signal generator that will provide accurately calibrated signals over the standard wave band and at the intermediate frequency, and an output meter are required for indicating the effect of adjustments.

Use a non-metallic screwdriver for the adjustments. The complete procedure is as follows:

I. F. Adjustment

Set the signal generator for a signal of 175 KC.

Connect the antenna lead of the signal generator thru a .05 mf. condenser to the stator of the 1st detector section of the tuning condenser. (See Fig. 2 for location of this section.) This can be done by pushing a wire or conductor between the stator plates or by extending an insulated wire thru the hole in the shield over the stator and pushing the wire thru the hole in the lug which extends up from the insulated stator assembly.

Connect the ground lead of the signal generator to the chassis ground.

Short out the oscillator section of the tuning condenser.

Set the volume control at the maximum position.

Attenuate the signal from the signal generator to prevent the levelling-off action of the AVC.

Then adjust the three I.F. trimmers until maximum output is obtained. The location of these trimmers is shown in Fig. 2.

1650 KC Adjustment

Set the signal generator for 1650 KC.

Turn the rotor of the tuning condenser to the full open position.

If a low capacity antenna is used connect the shielded antenna lead from the chassis through a 150 mmf. condenser to the antenna post of the signal generator. (If high capacity, use 1500 mmf.)

For this and all subsequent adjustments keep the volume control at the maximum position and attenuate the signal from the signal generator to prevent AVC action.

Adjust the trimmer of the oscillator section of the three gang condenser until maximum output is obtained—see Fig. 2 for location of this trimmer.

1400 KC. Adjustment

Set the signal generator for 1400 KC.

Turn the rotor of the tuning condenser carefully until maximum output is obtained.

Adjust the 1st detector and antenna trimmers for maximum output.

Do not change the setting of the oscillator trimmer.

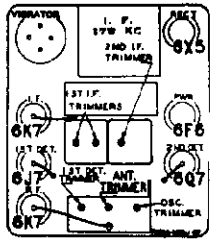

Fig. 2—Location of Tubes and Trimmers

Adjusting Antenna Trimmer

After the receiver is installed and the car antenna is connected it will be necessary to adjust the antenna trimmer. Tune in a weak signal between 1200 and 1400 KC with the volume control about three-fourths on. Remove the cover of the chassis case. The antenna trimmer is on the center tuning condenser section—see Fig. 2. Turn the adjusting screw of this condenser up or down until maximum output is obtained. CAUTION—Do not turn any of the other trimmer adjusting screws for this adjustment.

Calibrating the Receiver

To calibrate the receiver, tune in a station of known frequency. At the back of the control head is the calibration screw. Remove the pilot lamp assembly. Insert a fine blade screwdriver and turn this screw until the pointer on the dial scale is at the frequency of the station being received. The knob must be held during this adjustment.

If the control head is inaccessible it may be calibrated by setting the pointer from the front. Remove the crystal by inserting a knife blade under the lower edge. Loosen the pointer screw, set the pointer and retighten.

VOLTAGES AT SOCKETS

Antenna Disconnected — Battery 6 Volts Under Load

Type of Tube	Function	Across Heater	Plate to Ground	Screen to Ground	Cathode to Ground	Cathode Current M. A.
6K7	R. F. Amp.	5.6	230	100	4.6	8.0
6J7	1st Det. Osc.	5.6	230	100	0	2.8
6K7	I. F. Amp.	5.6	230	100	4.6	8.0
6Q7	2nd Det.	5.8	100(1)		1.6	0.4
6F6	Power	5.8	220	240	18.0(2)	29.0
6X5	Rectifier	5.8				53.0

(1) With 250,000 Ohm Meter
(2) Read Across Filter Choke

D. C. Resistance of Windings

Following are the D. C. resistances of the various windings in the chassis. The values given below will vary slightly in different sets.

Code	Winding	D. C. Resistance in Ohms
T1	Antenna Coil	
	Primary Winding	
	Long Portion	5.1
	Short Portion	3.2
	Secondary Winding—Either Portion	1.0
T2	R. F. Coil (Interstage R. F.)	
	Primary Winding	41.5
	Secondary Winding	
	No. 1	1.6
	No. 2	1.8
T3	1st I. F. Transformer	
	Primary Winding	80.0
	Secondary Winding	87.0
T4	2nd I. F. Transformer	
	Primary Winding	48.0
	Secondary Winding	48.2
	Dynamic Speaker	
T5	Output Transformer	
	Primary	415.6
	Secondary	Small
L3	Speaker Field	53
	Speaker Voice Coil	Small
T6	Oscillator Coils	
	Grid Coil	
	Long Portion	2.9
	Short Portion	0.3
	Plate Coil	1.8

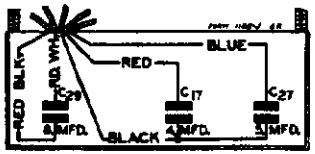

Fig. 4—Condenser Block—Internal Wiring

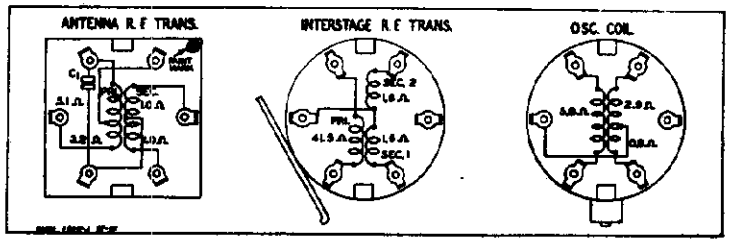

Fig. 3—R. F. and Oscillator Coil Base Terminal Arrangement and D. C. Resistance of Windings

Code	Winding	D. C. Resistance in Ohms
T7	Power Transformer	
	Primary Winding	
	Center Tap to Inside	Small
	Center Tap to Outside	Small
	Secondary Winding	
	Center Tap to Inside	200.0
	Center Tap to Outside	200.0
L1	"A" Line Reactor	Small
L4	Filament Reactor	.28
L5	Power Reactor	200.0
L6	R. F. "B" Plate Reactor	4.0
L7	Vibrator Filter Reactor	Small

©John F. Rider, Publisher

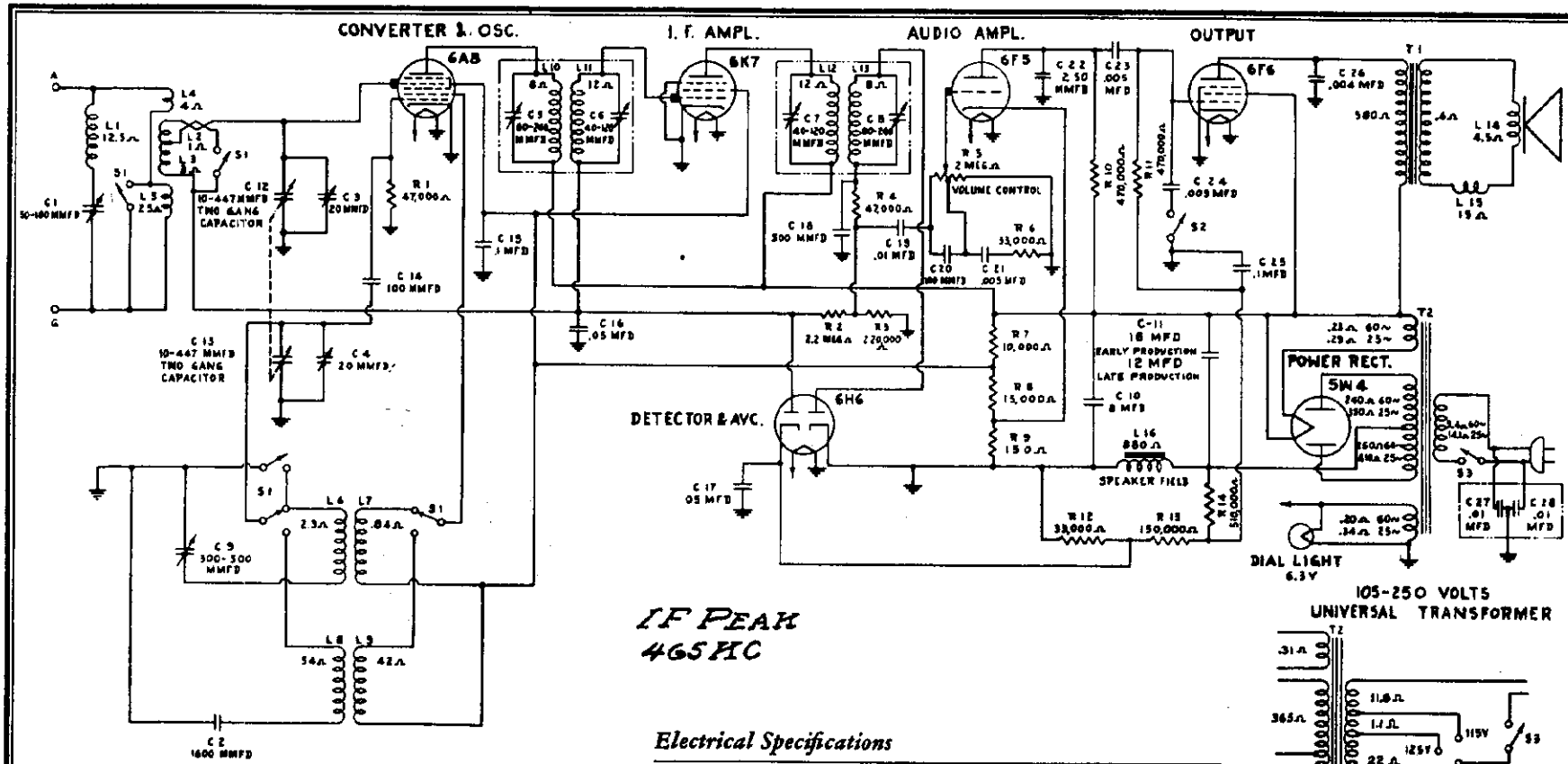

Tuning Frequency Range

Broadcast . . . . . 540-1750 KC
Short Wave . . . . . 2.2-7.0 MC (2,200-7,000 KC)

Tuning Control Drive Ratio

Single Speed . . . . . 5 to 1

Electrical Power Output

Undistorted . . . . . 2.0 Watts
Maximum . . . . . 5.0 Watts

Loud-speaker—Electrodynamic

Cone Model E-61 . . . 8 in.
Model E-62 . . . 6½ in.
Model E-68 . . . . 12 in.
Cone Coil Impedance at 400 Cycles
6½ in. Speaker . . . 3.3 ohms
8 and 12 in. Speaker . . . 5.5 ohms

Electrical Specifications

Rating Label	Power Supply (Volts)	Frequency (Cycles)	Power Consumption (Watts)
A	115	50–60	70
C	115	25–60	70
V	105–130 and 200–250	40–60	75

NOTE: Taps on universal transformers (rating "V") are accessible by removing the cap cover mounted on the top of the transformer. Schematic and wiring diagrams of the universal transformer are shown in Figures 1 and 2, respectively.

MODELS E-61, E-62, E-68
Chassis Wiring,
Circuit Data, Coil Data

GENERAL ELECTRIC CO.

DESCRIPTION OF ELECTRICAL CIRCUIT

Models E-61, E-62 and E-68 employ six metal envelope tubes in a superheterodyne circuit giving the excellent selectivity and sensitivity inherent in this type circuit. Ample undistorted output is obtained through diode detection and two high gain audio amplifier stages.

The signal from the antenna is applied to the control grid of the 6A8 tube through the R. F. coil, the secondary of which is tuned to the incoming signal by the rear section of the main tuning condenser. In the 6A8 tube the incoming signal is combined with the local oscillator signal which is 465 KC higher in frequency. The local signal is generated by the oscillator elements of this tube, and the proper frequency difference is maintained throughout the tuning range by the front section of the main tuning condenser in conjunction with the oscillator coil and padding capacitors.

The combination of the two signals produces the intermediate frequency of 465 kilocycles. This particular intermediate frequency is chosen to reduce image response and improve short-wave performance. The intermediate frequency amplifier consists of a 6K7

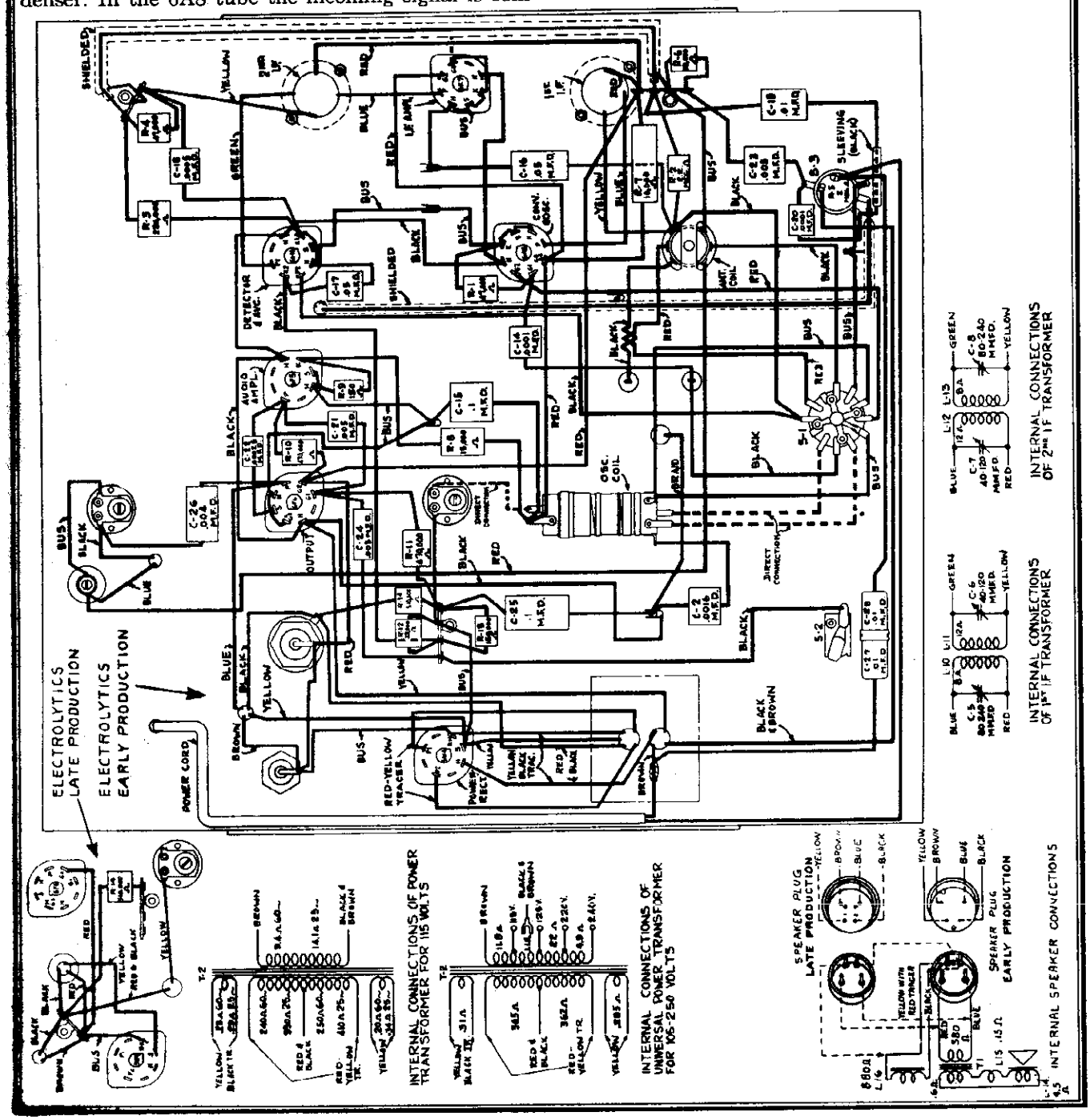

©John F. Rider, Publisher

tube and two I. F. transformers, each with two tuned circuits. An I. F. wave trap is provided across the antenna and ground terminals to eliminate interfering signals of the intermediate frequency.

The output of the I. F. amplifier is applied to one plate of the 6H6 diode rectifier, which is a combined detector, initial bias and automatic volume control tube. The direct-current component of the rectified signal, through one diode of the 6H6, produces a voltage drop across R-3. This voltage drop provides automatic bias for the converter and I. F. amplifier tubes and so gives automatic volume control action. The other diode of the 6H6 provides an initial bias for the tubes on the automatic volume control circuit under conditions of little or no signal. This initial bias diode, under conditions of small signal, draws current which flows through resistors R-2 and R-3. The resulting voltage is the required minimum operating bias for the controlled tubes. Upon receiving signals above the level of the initial bias, the initial bias diode stops drawing current and the automatic volume control diode takes over the controlling bias.

The manual volume control, R-5, selects the amount of audio signal applied to the grid of the 6F5 audio amplifier tube, and this regulates the output of the receiver. The output of the 6F5 tube is resistanc coupled to the grid of the 6F6 power amplifier pentod The plate circuit of the 6F6 is suitably matched t the loud-speaker by means of a step-down outpu transformer.

The tone control circuit consists of a .003 mf capacitor, connected in series with a two poi grounding switch, S-2, in the grid circuit of the 6F power pentode. When it is desired to reduce the hig frequency output of the receiver, the switch, S-2, turned to its counterclockwise grounding position.

Plate and grid voltages for all tubes are supplied b the power supply system employing a 5W4 full-wav rectifier tube which, together with a suitable netwo of resistors and capacitors, supplies the required vol ages and filtering action.

ALIGNMENT FREQUENCIES

I. F.	Broadcast	Wave Tra
465 KC	580 KC	465 KC
	1500 KC	

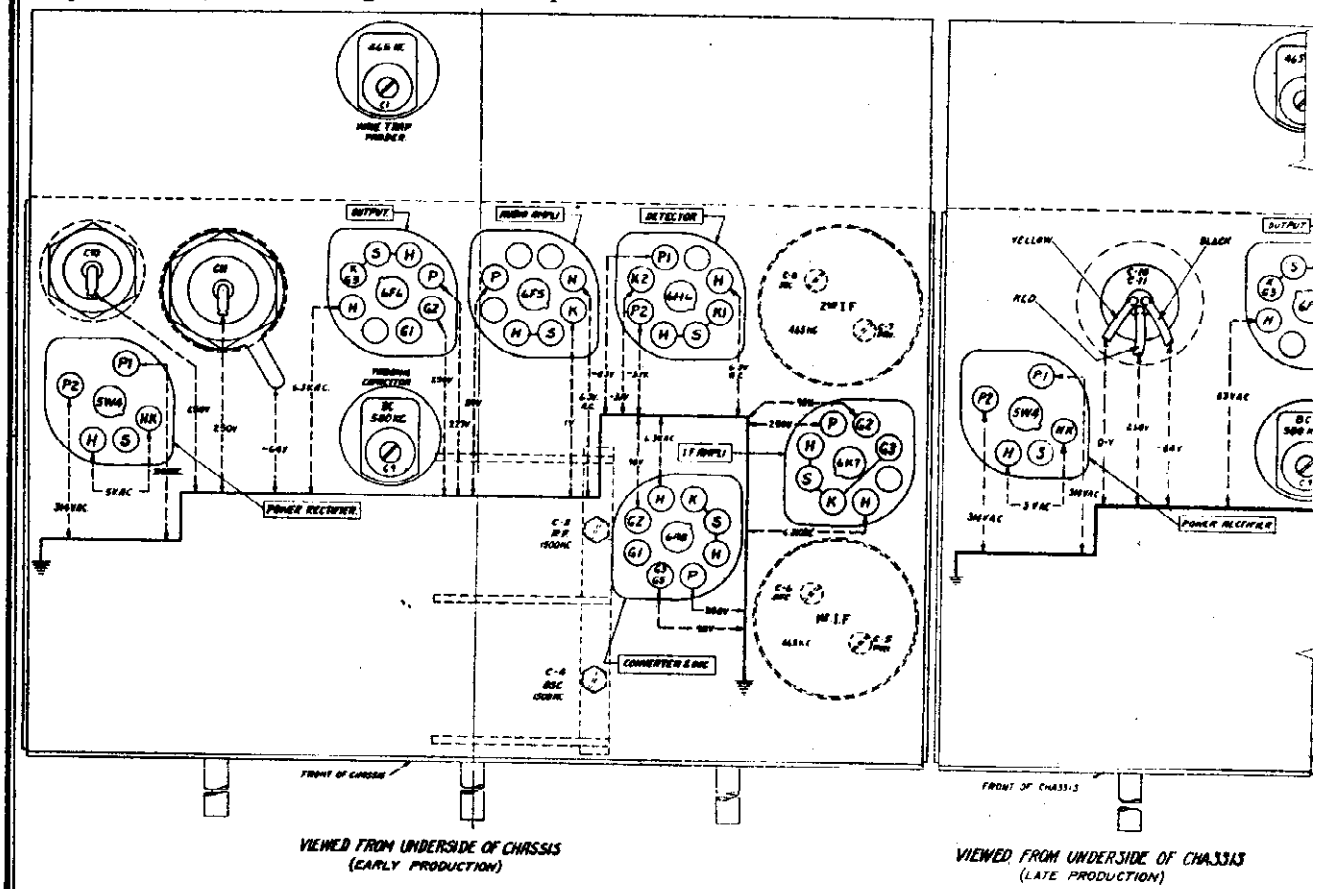

Measured at 125 volts supply. No signal input. Volume control maximum. Voltmeter 1000 ohms per volt; measur taken on highest scale giving accurate readable deflection.

Fig. 3. Trimmer Locations and Socket Voltages

©John F. Rider, Publisher

©John F. Rider, Publisher

MODELS E-61, E-62 AND E-68

REPLACEMENT PARTS

RECEIVER ASSEMBLIES

RB-040	BOARD—Terminal Board Near Osc. Padder	$0.10
RB-041	BOARD—Terminal Board on Rear Chassis Wall	.10
RB-124	BRACKET—Dial Light Bracket	.15
RB-125	BRACKET—Dial Support Bracket	.15
RC-014	CAPACITOR—.005 mfd. 200 V Paper (C-24)	.25
RC-018	CAPACITOR—.004 mfd. 600 V Paper (C-26)	.30
*RC-024	CAPACITOR—.005 mfd. 200 V Paper (C-21)	.25
*RC-029	CAPACITOR—.006 mfd. 400 V Paper (C-23)	.30
*RC-034	CAPACITOR—.01 mfd. 200 V Paper (C-19)	.25
*RC-072	CAPACITOR—.05 mfd. 200 V Paper (C-18, C-17)	.25
*RC-066	CAPACITOR—.1 mfd. 200 V Paper (C-15, C-25)	.30
RC-226	CAPACITOR—100 mmfd. Mica (C-14, C-20)	.25
RC-261	CAPACITOR—260 mmfd. Mica (C-22)	.25
RC-266	CAPACITOR—500 mmfd. Mica (C-16)	.30
*RC-345	CAPACITOR—1600 mmfd. Mica (C-2)	.35
*RC-403	CAPACITOR—8 mfd. 350 V Wet Electrolytic (C-10)	1.00
RC-413	CAPACITOR—16 mfd. 275 V Wet Electrolytic (C-11)	1.25
RC-567	CAPACITOR—12 mfd. 350 V and 8 mfd. 300 V Dual Dry Electrolytic (C-10, C-11) (Late Prod.)	1.90
*RC-608	CAPACITOR—Osc. Padder Capacitor (C-9)	.40
*RC-609	CAPACITOR—Wave Trap Trimmer (C-1) (50-100 mmfd)	.40
RC-709	CONDENSER—2 Gang Tuning Condenser (C-12, C-13)	3.25
RC-753	CAPACITOR—.01-.05 mfd. 250 V Paper (C-27, C-28)	.40
RC-815	CABLE—Dial Drive Cable (Pkg. of 5)	.50
*RC-858	CORD—Power Cord and Plug	.65
RD-030	DRUM—Condenser Drive Drum	.25
RD-031	DIAL SCALE	.20
*RP-004	FOOT—Chassis Mounting Foot	.15
*RG-001	GRID CAP—Control Grip Clip (Pkg. of 5)	.10
*RK-004	KNOB—Control Knob (Without Dot.) (Pkg. of 5)	.40
RK-005	KNOB—Frequency Band Switch Knob (With Dot.) (Pkg. of 5)	.50
RL-120	COIL—R. F. Coil (L-2, L-3, L-4, L-5)	1.10
RL-222	COIL—Oscillator Coil (L-6, L-7, L-8, L-9)	.90
RL-802	COIL—Wave Trap Coil (L-1, C-1)	.50
RP-041	POINTER—Dial Scale Pointer	.10
RP-042	PULLEY—Dial Cable Pulley (Pkg. of 2)	.15
*RQ-039 (RR-005)	RESISTOR—150 ohms ½ watt (R-9) (Pkg. of 5)	.60
RQ-095	RESISTOR—35,000 ohms ½ watt (R-6, R12) (Pkg. of 5)	.60
RQ-099	RESISTOR—47,000 ohms ½ watt (R-1, R-4) (Pkg. of 5)	.60
*RQ-111 (RR-054)	RESISTOR—150,000 ohms ½ watt (R-13) (Pkg. of 5)	.70
RQ-115	RESISTOR—220,000 ohms ½ watt (R-3) (Pkg. of 5)	.70
RQ-123	RESISTOR—470,000 ohms ½ watt (R-10, R-11) (Pkg. of 5)	.70
RQ-124	RESISTOR—510,000 ohms ½ watt (R-14) (Pkg. of 5)	.70
RQ-139	RESISTOR—2.2 megohms ½ watt (R-2) (Pkg. of 5)	.70
*RQ-487 (RR-235)	RESISTOR—15,000 ohms 1 watt (R-8) (Pkg. of 5)	1.00
RQ-683	RESISTOR—10,000 ohms 2 watt (R-7)	.35
RR-904	REFLECTOR—Dial Light Reflector	.15
RS-162	SHIELD—Chassis End Shield (E-61 only)	.20
RS-183	SHIELD—Chassis End Shield (E-68 Only)	$0.25
*RS-200	SOCKET—6 Pin Tube Socket (Pkg. of 5)	.75
*RS-204	SOCKET—6 Pin Tube Socket (Pkg. of 5)	.75
RS-321	SWITCH—Tone Control Switch (S-3)	.30
RS-322	SWITCH—Frequency Band Change Switch (S-1)	.75
RS-415	SPRING—Spring Bracket Supporting Cable Pulley (Pkg. of 2)	.10
RS-423	SPRING—Lock Spring (Push-on Type) (Pkg. of 10)	.25
RT-067	TRANSFORMER—Power Transformer 115 V. 50-60 cycles. "A" Rating	4.00
RT-068	TRANSFORMER—Power Transformer 115 V. 25-60 cycles. "C" Rating	3.15
RT-069	TRANSFORMER—Universal Power Transformer 105-125-230 V., 40-60 cycles	5.50
RT-220	TRANSFORMER—1st I.F. Transformer Complete with Trimmers (L-10, L-11), (C-5 C-6)	1.75
RT-221	TRANSFORMER—2nd I.F. Transformer Complete with Trimmers (L-12, L-13) (C-7, C-8)	1.80
RV-023	VOLUME CONTROL—Volume Control and Power Switch (R-5, S-9)	1.10
RW-104	WINDOW—Dial Window	.15
*RW-191	WASHER—Fet Washer for Control Shafts (Pkg. of 10)	.45
*RW-193	WASHER—Insulating Washer for Mounting (6 mfd. Electrolytic (Pkg. of 10)	.20
RX-015	SCREW ASSEMBLY—Chassis Mounting Screw Assembly (3 Screws, 6 Washers)	.10
RX-016	MOUNTING ASSEM.—3 Screws and 3 Cushions for Mounting Tuning Coondenser	.20

SPEAKER ASSEMBLIES E-68

RC-910	CONE—12 in. Cone and Voice Coil Gasket (L-14)	$1.45
RC-991	CLAMP—Cone Spider Clamp	.05
*RP-012	PLUG—Female Speaker Plug	.20
RP-040	PLUG—Male Speaker Plug	.20
RP-050	PLUG—Female Speaker Plug (Late Prod.)	.20
RP-051	PLUG—Male Speaker Plug (Late Prod.)	.20
RS-029	SPEAKER—12 in. Reproducer Unit Complete with Transformer (L-14, L-15, L-16, T-1)	9.80
RS-415	SPRING—V.C. Leads Spring (Pkg. of 2)	.10
RT-412	TRANSFORMER—Output Transformer (T-1)	1.35

SPEAKER ASSEMBLIES E-61

RC-909	CONE—8 in. Cone and Voice Coil and Gasket (L-14)	$1.15
	CLAMP—Cone Spider Clamp	.05
*RP-012	PLUG—Female Speaker Plug	.20
RP-040	PLUG—Male Speaker Plug	.20
RP-050	PLUG—Female Speaker Plug (Late Prod.)	.20
RP-051	PLUG—Male Speaker Plug (Late Prod.)	.20
RS-028	SPEAKER—8 in. Reproducer Unit Complete with Transformer (L-14 L-15, L-16, T-1)	7.25
RS-415	SPRING—V.C. Leads Spring (Pkg. of 2)	.10
RT-412	TRANSFORMER—Output Transformer (T-1)	1.35

SPEAKER ASSEMBLIES E-62

RC-911	CONE—6½" Cone and Voice Coil and Gasket (L-14)	$0.90
*RP-012	PLUG—Female Speaker Plug	.20
RP-040	PLUG—Male Speaker Plug	.20
RP-050	PLUG—Female Speaker Plug (Late Prod.)	.20
RP-051	PLUG—Male Speaker Plug (Late Prod.)	.20
RS-035	SPEAKER—6½" Reproducer Unit Complete with Transformer (L-14, L-15, L-16, T-1)	3.75
RT-416	TRANSFORMER—Output Transformer (T-1)	1.35

* Indicates part also used on 1936 "A" line of receivers.

PRICES ARE SUBJECT TO CHANGE WITHOUT NOTICE

ALIGNMENT PROCEDURE

The receiver should first be allowed to run for fifteen minutes in order to reach its approximate normal operating temperature. Before making any adjustments, it is wise to determine the correctness of the existing alignment. This may be done by supplying a signal to the receiver from the test oscillator at the alignment frequency and inserting a "Tuning Wand" into the coil involved. The "Tuning Wand" consists of a rod of insulating material having a ring of nonmagnetic metal attached to one end, and a small core of finely divided iron compacted into the opposite end. By inserting the metal ring end into the center of the R. F. coil, the inductance of this coil is lowered, increasing its resonant frequency. Inserting the iron-filled end into the coil raises its inductance, lowering its resonant frequency. If the R. F. circuits are in exact alignment, inserting either end of the tuning wand into the coil will result in a decrease in output. When an increase of signal is obtained with the iron-filled end of the wand, a decrease in resonant frequency of that circuit by increasing its trimmer capacity is indicated. When an increase of signal is obtained with the metal ring, a decrease in trimmer capacity is indicated.

Wand Signal	Trimmer Adjustment Required
Metal Ring Increase / Iron Filings Decrease	Decrease capacity
Metal Ring Decrease / Iron Filings Increase	Increase capacity

In order to align these receivers properly it is necessary to have available:

1. A modulated test oscillator capable of producing the above alignment frequencies.
2. An output indicator, such as a high resistance a-c voltmeter with a maximum scale reading of 3 to 5 volts, or a neon lamp indicator.
3. An alignment tool consisting of an insulating shaft with a small screwdriver blade.

The location of all alignment trimmer capacitors, as well as socket voltages, is shown in Fig. 3.

I. F. Alignment

Set the frequency band switch of the receiver to the broadcast position and turn the volume control to maximum (extreme clockwise position). Tune the receiver to some point above 1500 KC so that no signal is heard, short-circuiting the antenna and ground terminals if necessary, and ground the chassis.

Remove the control grid clip from the 6A8 tube and connect the test oscillator output between chassis and the dome terminal of the 6A8 tube. The I. F. amplifier is tuned to 465 KC; set the oscillator dial at this frequency. Make sure that a d-c path exists between the output terminals of the test oscillator; if an ohmmeter does not show continuity between the test oscillator terminals, connect a resistor of fairly high resistance between the 6A8 dome terminal and chassis to provide a d-c grid return path.

Connect the output meter across the cone coil of the speaker and adjust the test oscillator output control so that, with the volume control at maximum, a small indication is observed on the output indicator.

Adjust the secondary trimmer of the second I. F. transformer until a peak output reading is obtained. Maintaining a small output indication, adjust next the primary trimmer of the second I. F. transformer for maximum output. Continue this procedure, adjusting the secondary trimmer of the first I. F. transformer, and lastly, the primary trimmer of the first I. F. transformer. After completing this procedure, repeat it a second time for final alignment. The I. F. alignment will then be complete.

During both I. F. and R. F. alignments, the test oscillator signal should be maintained at the lowest level that will give a good output indication, keeping the receiver volume control at maximum and adjusting the test oscillator output control to give the required indication.

I. F. Wave Trap Alignment

After completion of the I. F. alignment, with the test oscillator still set on 465 KC, apply this frequency to the antenna post of the receiver through a dummy antenna. This dummy antenna consists of a 400 ohm resistor in series with a 250 mmfd. capacitor and should be connected in series between the test oscillator output and the receiver antenna post. With the 465 KC signal applied to the receiver antenna post, adjust the I. F. Wave Trap trimmer for minimum output indication.

2. R. F. Alignment

The R. F. and Oscillator trimmers are aligned at 580 and 1500 KC. First of all, check the position of the dial pointer. To do this, rotate the gang condenser to the maximum capacity position, i.e., plates fully meshed. While in this position, align the pointer with the last black line on the scale by loosening the dial drum set screws and rotating the drum on the gang shaft. Make sure the antenna and ground terminals of the receiver are not short-circuited and connect to them the output of the test oscillator, preferably using the dummy antenna described above between the test oscillator and the receiver antenna terminal. Connect the output indicator across the speaker cone coil.

Broadcast 540-1750 Kc

Set the frequency band switch to the broadcast position. Tune the test oscillator to 1500 KC and set the dial pointer on the receiver to this frequency. Adjust the broadcast oscillator trimmer on the front section of the gang condenser for maximum output, keeping the receiver volume control at its extreme clockwise position and adjusting the test oscillator output to maintain a small reading on the output indicator. When optimum adjustment on the broadcast oscillator trimmer is obtained, adjust the broadcast R. F. trimmer on the rear section of the gang for maximum output.

Now set the test oscillator at 580 KC and tune the receiver to that frequency. Slowly, rocking the tuning condenser back and forth through the signal, adjust the 580 KC padding capacitor for maximum output. When this has been done, return to 1500 KC on the receiver and test oscillator and recheck the alignment at that frequency for maximum output. The broadcast band should now be in alignment.

Short Wave—2.2—7.0 M.C. (2,200-7,000 Kc)

No separate short wave trimmers are provided on this receiver. The correct adjustment of the broadcast band at 580 and 1500 KC automatically aligns the short wave band.

SOCKET VOLTAGES

Tube No.		Plate to Ground Volts D-c	Screen Grid to Ground Volts D-c	Cathode to Ground Volts D-c	Cathode Current M.A.	Heater Volts A-c
6A8	Oscillator	98	...	0	...	...
	Converter	250	98	...	12.0	6.3
6K7 I. F. Amplifier		250	96	0	9.0	6.3
6H6 Detector and AVC		...	...	0	...	6.3
6F5 Audio Amplifier		*89	...	1.0	0.3	6.3
6F6 Output		257	250	0	38.0	6.3
5W4 Power Rectifier		638/814 RMS	...	250	64.0	5.0

Measured at 115 volts supply. No signal input. Volume control maximum. Voltmeter 1000 ohms per volt; measurements taken on highest scale giving accurate readable deflection.
* Supply voltage minus drop in load resistor, measured on 1000 volt scale.

©John F. Rider, Publisher

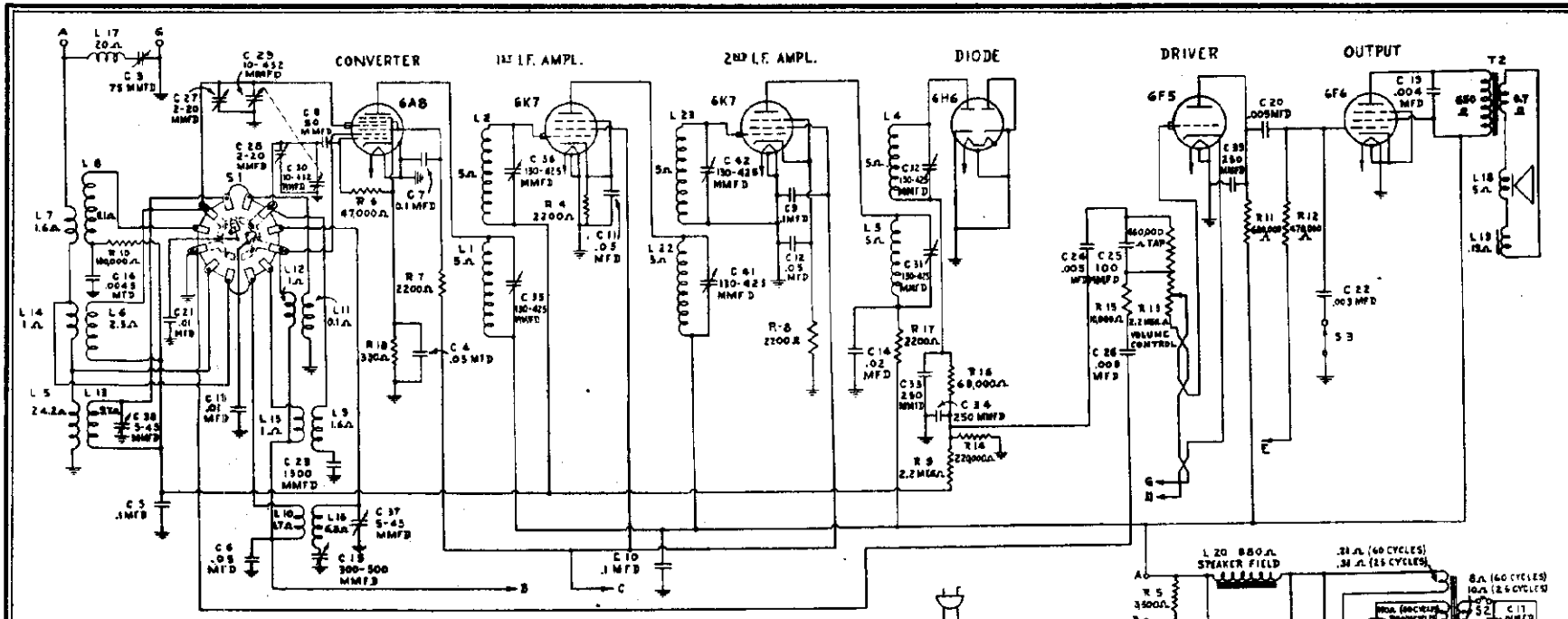

ALIGNMENT FREQUENCIES

I. F.	Band "B"	Band "D"	Wave Trap
465 kc.	580 kc. 1500 kc.	18,000 kc.	465 kc.

Tuning Frequency Range

Band "B" . . . . . 540–1600 kc.
Band "C" . . . . . 1560–5800 kc.
Band "D" . . . . . 5.6–18.0 mc. (5,600–18,000 kc.)

Tuning Control Drive Ratio

Fast Tuning . . . . . 8 to 1
Vernier Tuning . . . . . 40 to 1

Electrical Power Output

Undistorted . . . . . 2.5 watts
Maximum . . . . . 5.0 watts

Loud-speaker—Electrodynamic

Cone: Model E-71 . . . . . 8 in.
Model E-72 . . . . . 8 in.
Model E-76 . . . . . 12 in.

Electrical Specifications

Rating Label	Power Supply (Volts)	Frequency (Cycles)	Power Consumption (Watts)
A	115	50–60	75
C	115	25–60	75
V	105–130 and 200–250	40–60	80

NOTE: Taps on universal transformers (Rating "V") are accessible by removing the cap cover mounted on the top of the transformer. Schematic and wiring diagrams of the uni-

MODELS E-71, E-72, E-76
Chassis Wiring
Transformer Data

GENERAL ELECTRIC CO.

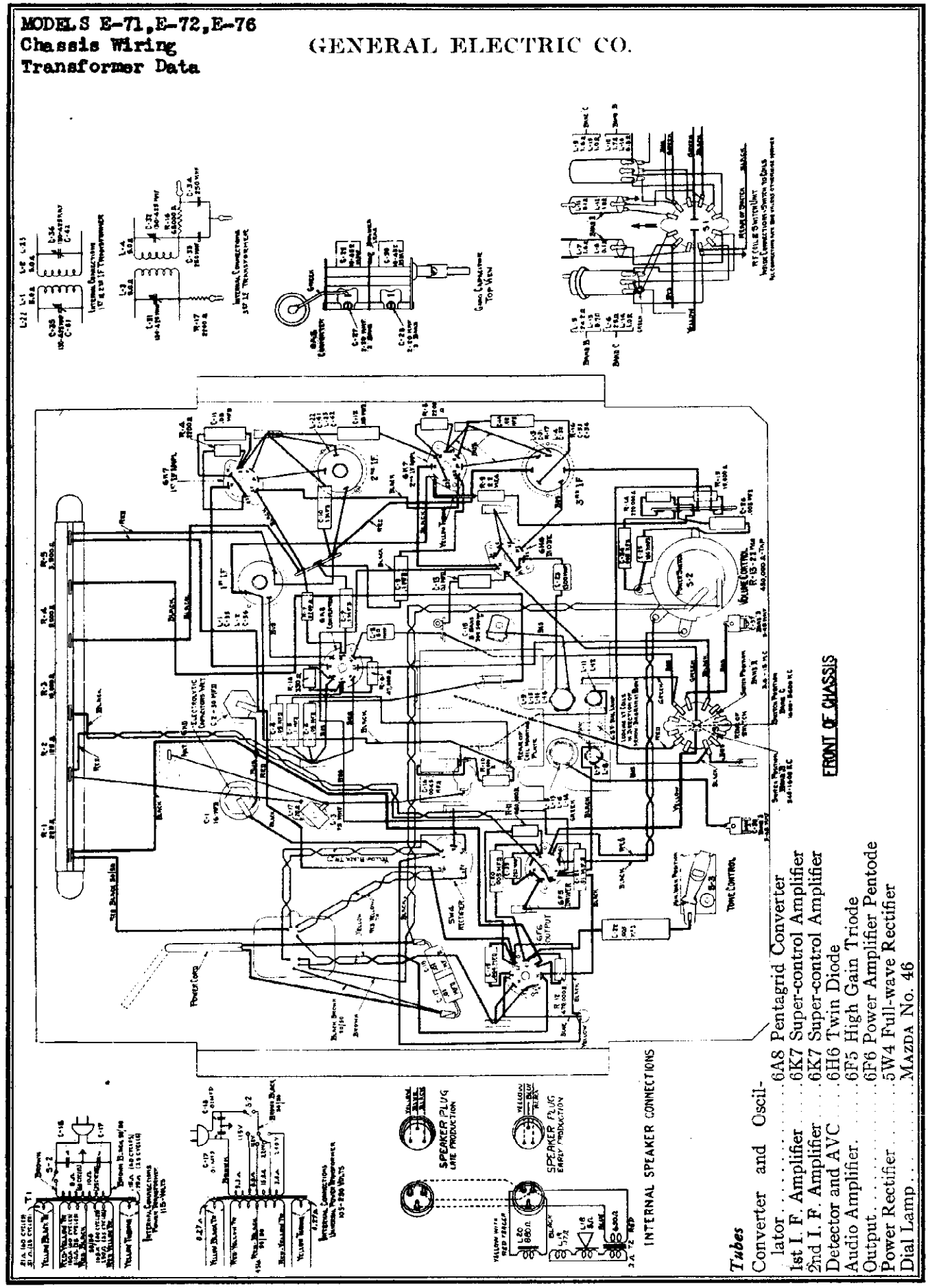

Tubes

Converter and Oscillator	6A8 Pentagrid Converter
1st I. F. Amplifier	6K7 Super-control Amplifier
2nd I. F. Amplifier	6K7 Super-control Amplifier
Detector and AVC	6H6 Twin Diode
Audio Amplifier	6F5 High Gain Triode
Output	6F6 Power Amplifier Pentode
Power Rectifier	5W4 Full-wave Rectifier
Dial Lamp	Mazda No. 46

©John F. Rider, Publisher

©John F. Rider, Publisher

SUPERHETERODYNE

ALL-WAVE RADIO RECEIVERS

SERVICE DATA

Physical Specifications

Model	E-71	E-72	E-76
Height	18⅛ in.	11⅛ in.	38½ in.
Width	13 in.	21 in.	23½ in.
Depth	9⅛ in.	9 in.	10⅛ in.
Weight packed	27 lbs.	27 lbs.	54 lbs.

DESCRIPTION OF ELECTRICAL CIRCUIT

Models E-71, E-72, and E-76 employ seven metal envelope tubes to perform the above functions in a superheterodyne circuit, giving the excellent selectivity and sensitivity inherent in this type circuit. The "B" and "C" band coils are wound on a common form, while the "D" band coils have individual forms. Ample undistorted output is obtained through diode detection and two audio amplifier stages.

The signal from the antenna is applied to the control grid of the 6A8 converter tube through the antenna coil, the secondary of which is tuned to the incoming signal by the rear section of the main tuning condenser. The secondary of the coil for the band next lower in frequency to the one in use is short-circuited through a capacitor to prevent absorption of energy at its resonant frequency which falls in the next higher band. (NOTE.—On the schematic diagram, Fig. 1, the center portion of the wave band switch supporting the two shorting lugs rotates simultaneously with the four contact pins.) In the 6A8 tube the incoming signal is combined with the local oscillator signal which is 465 kc. different in frequency. The local signal is generated by the oscillator elements of this tube and the proper frequency difference is maintained throughout the tuning range by the front section of the main tuning condenser in conjunction with the oscillator coil and padding capacitors.

The combination of the signal frequency with the local oscillator frequency in the converter tube produces the intermediate frequency of 465 kilocycles. This particular intermediate frequency is chosen to reduce image response and improve short-wave performance. The intermediate frequency amplifier consists of two 6K7 tubes and three transformers, each with two tuned circuits.

The output of the I. F. amplifier is applied to the 6H6 diode rectifier, which is a combined detector and automatic volume control tube. The direct current component of the rectified signal produces a voltage drop across R-14. This voltage drop provides automatic bias for the R. F. and I. F. amplifier and converter tubes and so gives automatic volume control action. Full automatic bias voltage is applied to the pentagrid converter tube and to the first I. F. amplifier tube. The second I. F. tube is operated on self bias, obtained by the drop through R-8. This enables the second I. F. tube to provide maximum power to the 6H6 diode rectifier.

MODELS E-71, E-72 AND E-76

The manual volume control, R-13, selects the amount of audio signal applied to the grid of the 6F5 audio amplifier tube and this regulates the output of the receiver. The output of the 6F5 tube is resistance coupled to the grid of the 6F6 power amplifier pentode. The plate circuit of the 6F6 is suitably matched to the loud-speaker by means of a step-down output transformer.

The tone control circuit consists of a .003-mfd. capacitor connected in series with a grounding switch S-3 in the grid circuit of the 6F6 output tube. When it is desired to reduce the high frequency output of this receiver the switch S-3 is closed to ground.

Plate and grid voltages for all tubes are supplied by the power supply system employing a 5W4 full-wave rectifier tube which, together with a suitable network of resistors and capacitors, supplies the required voltages and filtering action.

1. I. F. Alignment

Set the frequency band switch of the receiver to Band "B," short-circuit the antenna and ground terminals and tune the receiver to some point where no signal is heard. Set the volume control at its maximum position and ground the chassis.

The I. F. amplifier is tuned to 465 kc.; set the test oscillator dial at this frequency. Connect the test oscillator output between the converter tube (6A8) control grid and chassis. Connect the output meter across the cone coil of the speaker and adjust the test oscillator output control so that, with the receiver volume control at maximum, a small deflection is observed on the output meter. During both I. F. and R. F. alignment, the test oscillator signal should be maintained at the lowest level that will give a good readable output indication.

Adjust the secondary trimmer of the third I. F. transformer until a maximum output reading is obtained. Maintain a small deflection on the output meter throughout alignment by adjusting the test oscillator output. Next, adjust the primary trimmer of the third I. F. transformer for maximum output. Continue this procedure, adjusting the secondary and primary trimmers, respectively, of the second I. F. transformer. The secondary trimmer of the first I. F. transformer may then be adjusted and, lastly, the primary trimmer of the first I. F. transformer. After completing this procedure, repeat it a second time for final alignment. The I. F. alignment will then be complete.

I. F. Wave Trap Alignment

After completion of the I. F. alignment, with the test oscillator still set on 465 kc., apply this frequency to the antenna post of the receiver through a dummy antenna. This dummy antenna consists of a 400-ohm resistor in series with a 250-mmfd. capacitor and should be connected in series between the test oscillator output and the receiver antenna post. With the 465-kc. signal applied to the receiver antenna post, adjust the I. F. Wave Trap trimmer for *minimum* output indication.

2. R. F. Alignment

First of all, check the position of the dial pointer. To do this, rotate the gang condenser to the maximum capacity position, i.e., plates fully meshed. While in this position, align the pointer with the last black line on the scale by loosening the dial drum set screws and rotating the drum on the gang shaft. Make sure the antenna and ground terminals of the receiver are not short-circuited and connect to them the output of the test oscillator, preferably using the dummy antenna described above between the test oscillator and the receiver antenna terminal. Connect the output indicator across the speaker cone coil.

"D" Band (5.6-18.0 mc.)

Because of the R. F. circuit used in this receiver, the "D" band must be aligned first. Set the frequency band switch to the "D" band position by rotating it to its most clockwise position. Tune the test oscillator to 18,000 kc. (18 mc.) and set the dial pointer on the receiver at this frequency. Adjust the "D" band oscillator trimmer, located on the front section of the gang condenser, for maximum output. (NOTE.—The oscillator operates on the *low* frequency side of the incoming signal; therefore adjust the trimmer until the second oscillator peak is reached as the trimmer is *increased* in capacity. A check for the correctness of this adjustment may be made by rotating the gang to the 17,070 kc. calibration mark. If, with increased input from the test oscillator, no signal is detected, the correct oscillator peak has been used.) Keep the receiver volume control at its extreme clockwise position and adjust the test oscillator output to maintain a small reading on the output indicator

When the optimum adjustment on the oscillator trimmer has been obtained, adjust the "D" band antenna trimmer on the rear section of the gang for maximum output while rocking the tuning condenser through the signal.

"C" Band (1.56-5.80 mc.)

No separate trimmers are provided for adjustment of this band. The correct adjustment of the "D" band and "B" band automatically aligns the "C" band. The adjustment procedure for the "B" band follows immediately.

"B" Band (540-1600 kc.)

Set the frequency band switch to the broadcast position. Rotate the gang condenser until the dial pointer indicates the 1500 kc. calibration point, and adjust the test oscillator to this frequency. The "B" band trimmers are located underneath the chassis. (See Fig. 2.) Adjust the broadcast oscillator trimmer for maximum output. This trimmer is the one nearest the volume control. When the oscillator has been peaked, adjust the antenna trimmer for maximum output. Here again, as pointed out previously, it is necessary to maintain a small R. F. input from the test oscillator to avoid erratic action of the output indicator due to automatic volume control action.

Now set the test oscillator at 580 kc. and tune the receiver to that frequency. Slowly, rocking the tuning condenser back and forth through the signal, adjust the 580-kc. padding capacitor for maximum output. When this has been done, return to 1500 kc. on the receiver and test oscillator and recheck the alignment at that frequency for maximum output. The broadcast band should now be in alignment.

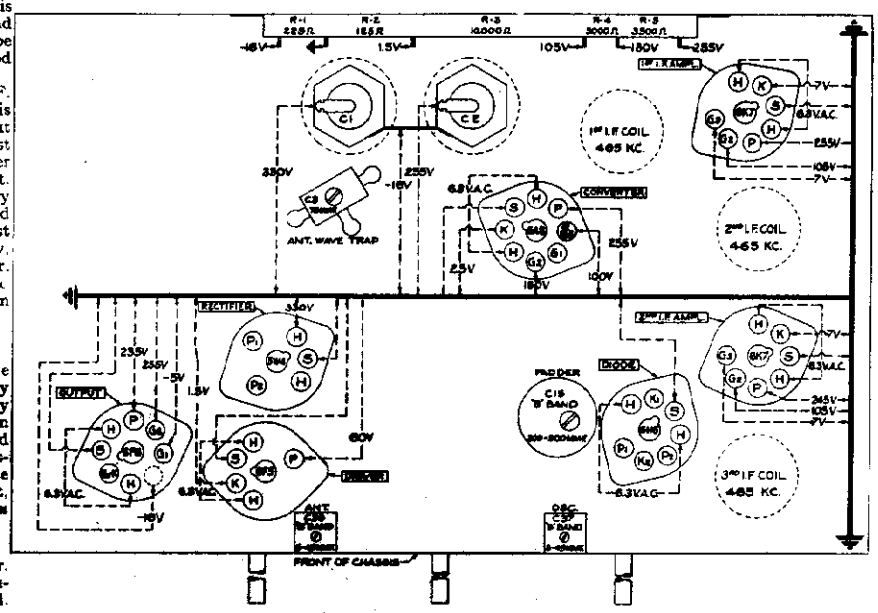

VIEWED FROM UNDERSIDE OF CHASSIS

Fig. 3. Trimmer Location & Socket Voltages

MODELS E-71, E-72, E-76
Parts List

GENERAL ELECTRIC CO.

Stock No.	Description	List Price
*RB-026	BOARD—Antenna & Ground Terminal Board	$0.10
RB-040	BOARD—Terminal Board Near Oscill. Padder	.10
RB-044	BOARD—Terminal Board on Front Wall near Volume Control	.10
RB-134	BRACKET—Dial Light Bracket	.15
*RC-024	CAPACITOR—.005 mfd., 200 volt, Paper (C-24)	$0.25
*RC-029	CAPACITOR—.005 mfd., 400 volt, Paper (C-20)	.30
*RC-034	CAPACITOR—.01 mfd., 200 volt, Paper (C-21)	.25
RC-036	CAPACITOR—.008 mfd., 200 volt, Paper (C-26)	.25
*RC-072	CAPACITOR—.05 mfd, 200 volt, Paper (C-4, C-11, C-12)	.25
*RC-080	CAPACITOR—.02 mfd., 400 volt, Paper (C-14)	.25
*RC-091	CAPACITOR—.05 mfd., 400 volt, Paper (C-6)	.30
*RC-096	CAPACITOR—.1 mfd., 200 volt, Paper (C-5, C-13)	.30
*RC-123	CAPACITOR—.1 mfd., 400 volt, Paper (C-7, C-9, C-10)	.35
RC-218	CAPACITOR—50 mmfd., Mica (C-8)	.25
RC-235	CAPACITOR—100 mmfd., Mica (C-25)	.25
RC-261	CAPACITOR—250 mmfd., Mica (C-33, C-34, C-39)	.25
*RC-344	CAPACITOR—1300 mmfd., Mica (C-23)	.35
*RC-412	CAPACITOR—30 mfd., 280 volt, Wet Electrolytic (C-2)	1.20
RC-413	CAPACITOR—16 mfd., 340 volt, Wet Electrolytic (C-1)	1.25
*RC-608	CAPACITOR—Oscillator Padder, 300-500 mmfd. (C-15)	.40
RC-618	CAPACITOR—Trimmer Capacitor (On Lower Front Wall) (C-37, C-38)	.25
RC-710	CONDENSER—Two-gang Tuning Condenser, 10-452 mmfd. (C-29, C-30)	3.60
RC-754	CAPACITOR—Line Capacitor, .01-.01 mfd., 250 volt A.C. (C-17, C-18)	.40
RC-815	CABLE—Dial Cable, Pkg. of 5	.50
*RC-854	CORD—Power Cord and Plug	.60
RD-030	DRUM—Condenser Drive Drum	.40
RD-032	DIAL—Dial Scale	.30
RD-034	DRIVE—Condenser Drive	1.10
RF-010	FOOT—Chassis Mounting Foot	.30
*RG-001	GRID CAP—Control Grid Cap, Pkg. of 5	.10
*RK-004	KNOB—Control Knob (Without Dot), Pkg. of 5	.40
*RK-005	KNOB—Control Knob (With Dot), Pkg of 5	.50
RL-121	COIL—R.F. Coil Band D (L-7, L-8)	.75
RL-122	COIL—R.F. Coil Band B and C (L-5, L-13; L-6, L-14)	1.10
RL-223	COIL—Osc. Coil Band D (L-11, L-12)	.70
RL-224	COIL—Osc. Coil Band B and C (L-9, L-15; L-10, L-16)	1.00
RP-042	PULLEY—Dial Pulley, Pkg. of 2	.25
RP-045	POINTER—Dial Pointer and Guide	.10
RP-046	PLATE—R.F. Coil Unit End Plate with Shield	.25
RQ-047	RESISTOR—330 ohms, ¼ watt, Carbon (R-18), Pkg. of 5	.60
RQ-067	RESISTOR—2200 ohms, ¼ watt, Carbon (R-4, R-7, R-8), Pkg. of 5	.60
*RQ-083 (RR-021)	RESISTOR—10,000 ohms, ¼ watt, Carbon (R-15), Pkg. of 5	.60
RQ-099	RESISTOR—47,000 ohms, ¼ watt, Carbon (R-6), Pkg. of 5	.60
RQ-103	RESISTOR—68,000 ohms, ¼ watt, Carbon (R-16), Pkg. of 5	.60
*RQ-107 (RR-050)	RESISTOR—100,000 ohms, ¼ watt, Carbon (R-10), Pkg. of 5	.70
RQ-115	RESISTOR—220,000 ohms, ¼ watt, Carbon (R-14), Pkg. of 5	.70
RQ-123	RESISTOR—470,000 ohms, ¼ watt, Carbon (R-12), Pkg. of 5	.70
RQ-127	RESISTOR—680,000 ohms, ¼ watt, Carbon (R-11), Pkg. of 5	.70
RQ-139	RESISTOR—2.2 megohms, ¼ watt, Carbon (R-9), Pkg. of 5	.70
RR-716	RESISTOR—Tapped Bleeder Resistor (R-1, R-2, R-3, R-4, R-5)	.90
RB-135	BRACKET—Dial Support Bracket	$0.15
RC-014	CAPACITOR—.003 mfd., 200 volt, Paper (C-22)	.25
RC-017	CAPACITOR—.0045 mfd., 200 volt, Paper (C-16)	.25
RC-018	CAPACITOR—.004 mfd., 600 volt, Paper (C-19)	.30
RR-905	REFLECTOR—Dial Light Reflector	$0.15
RS-136	SHIELD—1st and 2nd I.F. Shield Can	.20
RS-137	SHIELD—3rd I.F. Shield Can	.20
RS-164	SHIELD—Chassis End Shield (E-76 only)	.30
*RS-200	SOCKET—8 Pin Tube Socket, Pkg. of 5	.75
*RS-204	SOCKET—5 Pin Tube Socket, Pkg. of 5	.75
RS-321	SWITCH—Tone Control Switch (S-3)	.30
RS-323	SWITCH—Band Change Switch (S-1)	1.25
RS-415	SPRING—Spring Bracket Supporting Cable Pulley, Pkg. of 2	.10
RS-423	SPRING—Knob Spring (Push-on type), Pkg. of 10	.25
RS-858	SCREWS—Set Screws for Dial Drive Drum, Pkg. of 10	.10
RT-074	TRANSFORMER—Power Transformer, 115 volts, 50-60 cycles (T-1)	4.50
RT-075	TRANSFORMER—Power Transformer, 115 volts, 25-60 cycles (T-1)	8.35
RT-076	TRANSFORMER — Universal Power Transformer, 105-130 volts and 200-250 volts, 40-60 cycles (T-1)	8.50
RT-223	TRANSFORMER—1st and 2nd I.F. Transformer (Complete) (L-1, L-2; C-35, C-36) (L-22, L-23; C-41, C-42)	1.50
RT-224	TRANSFORMER—3rd I.F. Transformer (Complete) (L-3, L-4; C-31, C-32)	1.75
RV-014	VOLUME CONTROL—Volume Control and Power Switch, 2.2 meg. Total Res. (R-13, S-2)	1.15
RW-005	WINDOW—Dial Window	.15
*RW-101	WASHER—Felt Washers for Control Shafts, Pkg. of 10	.45
*RW-102	WASHER—Insulating Washer for Mounting Electrolytic Cap, Pkg. of 10	.20
RW-400	WAVE TRAP COMPLETE—(L-17, C-3)	.80
RX-016	MOUNTING ASSEMBLY—Screws and Cushions for Mounting Tuning Condenser	.30

SPEAKER ASSEMBLIES E-71 AND E-72

RC-909	CONE—8-in. Cone and Voice Coil and Gasket (L-18)	1.15
RC-990	CLAMP—Cone Spider Clamp	.05
*RP-012	PLUG—Female Speaker Plug	.20
RP-044	PLUG—Male Speaker Plug	.20
RP-052	PLUG—Female Speaker Plug (Late Production)	.20
RP-053	PLUG—Male Speaker Plug (Late Production)	.20
RS-030	SPEAKER—8-in. Reproducer Unit Complete with Transformer (L-18, L-19, L-20, T-2)	7.40
RS-416	SPRING—V.C. Leads Spring, Pkg. of 2	.10
RT-413	TRANSFORMER—Output Transformer T-2)	1.30

SPEAKER ASSEMBLIES E-76

RC-910	CONE—12-in. Cone and Voice Coil and Gasket (L-18)	1.45
RC-991	CLAMP—Cone Spider Clamp	.05
*RP-012	PLUG—Female Speaker Plug	.20
RP-044	PLUG—Male Speaker Plug	.20
RP-052	PLUG—Female Speaker Plug (Late Production)	.20
RP-053	PLUG—Male Speaker Plug (Late Production)	.20
RS-031	SPEAKER—12-in. Reproducer Unit Complete with Transformer (L-18, L-19, L-20, T-2)	9.80
RS-416	SPRING—V.C. Leads Spring, Pkg. of 2	.10
RT-413	TRANSFORMER—Output Transformer (T-2)	1.30

* Indicates part also used on 1936 "A" line receivers.

PRICES ARE SUBJECT TO CHANGE WITHOUT NOTICE

GENERAL ELECTRIC CO.

MODELS E-81, E-86
Schematic

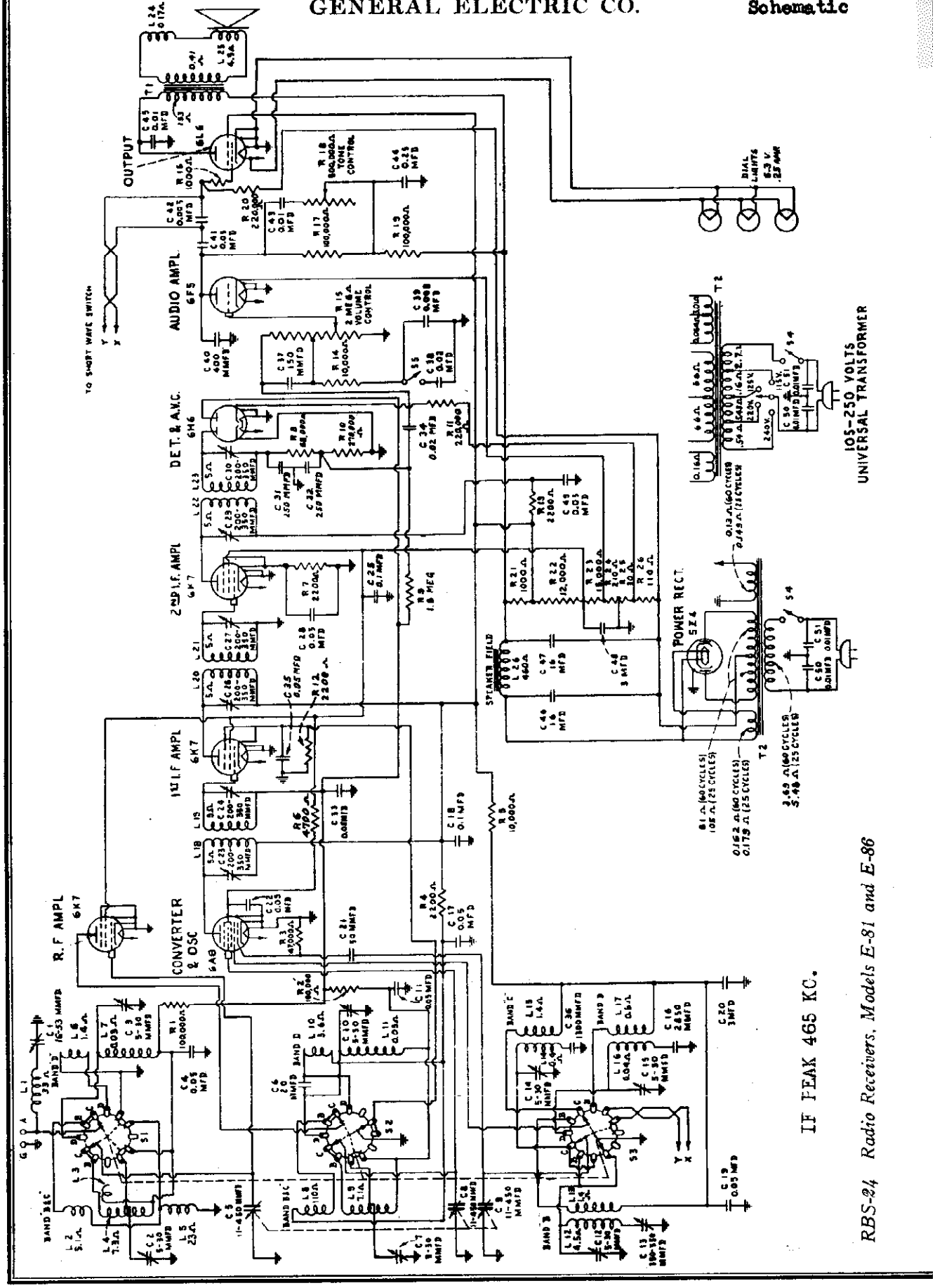

RBS-24 Radio Receivers, Models E-81 and E-86

©John F. Rider, Publisher

MODELS E-81, E-86
Chassis Wiring

GENERAL ELECTRIC CO.

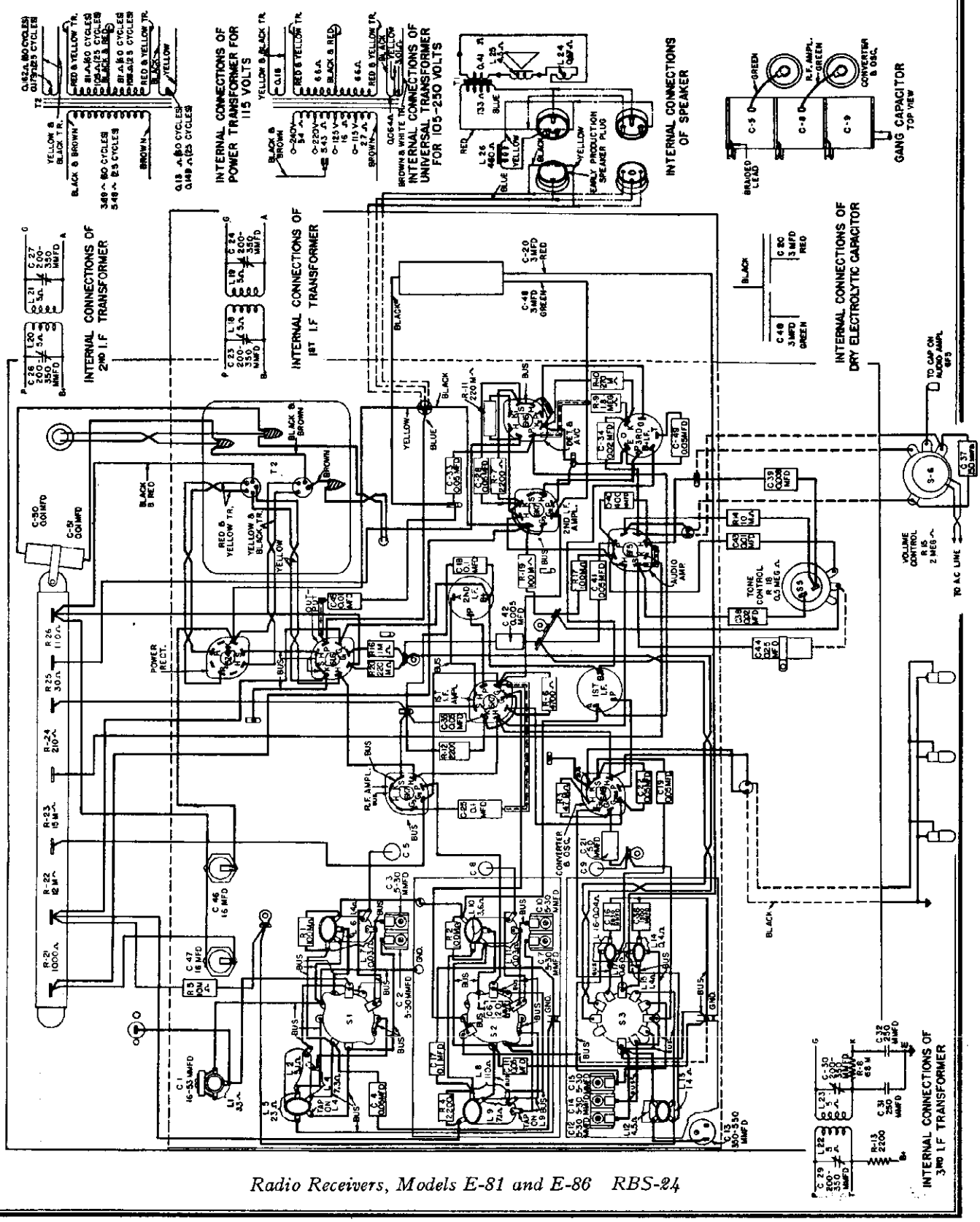

Radio Receivers, Models E-81 and E-86 RBS-24

©John F. Rider, Publisher

ALL-WAVE RECEIVERS

SUPERHETERODYNE August 1936 (5M)

MODELS E-81 AND E-86

Physical Specifications

	E-81	E-86
Model		
Height	19¾ in.	39 in.
Width	15¾ in.	26 in.
Depth	11⅜ in.	11⅛ in.
Weight packed	38 lb	63 lb

Electrical Specifications

Rating Label	Power Supply (Volts)	Frequency (Cycles)	Power Consumption (Watts)
A	115	50–60	100
C	115	25–40	100
V	105–130 and 200–250	40–60	105

NOTE—Taps on universal transformers (Rating "V") are accessible by removing the cap cover on the top of the transformer.

Tuning Frequency Range

Band "B"	540–1680 kc.
Band "C"	1680–6000 kc.
Band "D"	6.0–18.0 mc. (6,000–18,000 kc.)

Tuning Control Drive Ratio

Fast Tuning	8 to 1
Vernier Tuning	40 to 1

Electrical Power Output

Undistorted	6.5 watts
Maximum	14.0 watts

Loud-speaker—Electrodynamic

Cone: Model E-81 . . . . . 8 inch
Model E-86 . . . . . 12 inch
Cone Coil Impedance at 400 cycles. . . . . 6.5 ohms

Tubes

R. F. Amplifier . . . . 6K7 Triple-grid Super-control Amplifier
Converter and Oscillator. . . . . 6A8 Pentagrid Converter
First I. F. Amplifier. . . . 6K7 Triple-grid Super-control Amplifier
Second I. F. Amplifier. . . . 6K7 Triple-grid Super-control Amplifier
Detector and AVC. . 6H6 Twin Diode
Audio Amplifier. . . . 6F5 High Gain Triode
Output. . . . . 6L6 Beam Power Amplifier Tetrode
Power Rectifier. . . . . 5Z4 Full-wave Rectifier
Dial Lamps. . . . . MAZDA No. 46

DESCRIPTION OF ELECTRICAL CIRCUIT

Models E-81 and E-86 employ eight metal envelope tubes in a superheterodyne circuit, giving the excellent sensitivity and selectivity inherent in this type circuit. The radio frequency section of this eight-tube chassis utilizes a novel type of construction known as the "Junior Sentry Box." This type construction permits using extremely short connecting leads and isolates each radio frequency circuit in its own particular shielded section. Separate groups of coils are used for each band in the oscillator section. The antenna and R. F. sections are composed of two coils, a separate coil for the "D" band and a composite coil for the "B" band and "C" band. Operation on the "C" band is obtained by shorting out a section of the antenna and R. F. "B" band coils.

The signal from the antenna is applied to the control grid of the 6K7 R. F. amplifier tube through the antenna coil, the secondary of which is tuned to the incoming signal by the rear section of the main tuning condenser. The antenna coil, for bands "B" and "C," contains two primary coils connected for operation on the "B" band; however, when the band switch is turned to the "C" band position, the lower primary coil, L-5, is shorted out. The high frequency trimming adjustment, for the "B" band antenna and R. F. stages, is accomplished by two adjustable trimmers connected from the "C" band tap on each coil to ground. The capacity coupling coil, L-3, acts only on the "C" band and its function is similar to that of a fixed antenna stage trimmer for that band.

The amplified radio frequency signal is impressed upon the signal control grid of the 6A8 converter tube through the R. F. coil, the secondary of which is tuned to the signal frequency by the center section of the main tuning condenser. In the 6A8 tube, the incoming signal is combined with the local oscillator signal which is 465 kc. different in frequency. The local signal is generated by the oscillator elements of this tube and the proper frequency difference is maintained throughout the tuning range by the front section of the main tuning condenser in conjunction with the oscillator coils and padding capacitors.

The combination of the signal frequency with the local oscillator frequency in the 6A8 converter tube produces the intermediate frequency of 465 kilocycles. This particular intermediate frequency is chosen to reduce image response and improve short-wave performance.

The intermediate frequency amplifier consists of a two-stage cascade section composed of three I. F. transformers and two 6K7 amplifier tubes. Each I. F. transformer has two tuned circuits. The first I. F. amplifier 6K7 is operated on both self bias and on AVC for the broadcast band, since its grid return connects to the AVC bus. On the two short-wave bands the self bias resistor is shorted out by one of the band switch sections and this tube receives only AVC bias. The second I.F. amplifier 6K7 tube operates on self bias for all bands. This enables the second I.F. tube to provide maximum power to the 6H6 diode rectifier.

The output of the I.F. amplifier is applied to one plate of the 6H6 diode rectifier, which is a combined second detector, initial bias and automatic volume control tube. The direct current component of the rectified signal, through one diode of this tube, produces a voltage drop across resistor R-10. This voltage drop provides automatic bias for the R. F. amplifier, converter and the first I.F. amplifier, and thus gives automatic volume control action. The other diode of the 6H6 provides an initial bias for the tubes on the AVC circuit under conditions of little or no signal. This initial bias diode, under conditions of small signal, draws current which flows through resistors R-9 and R-10. The resulting voltage is the required minimum operating bias for the tubes on the AVC circuit. Upon receiving signals above the level of the initial bias, the initial bias diode stops drawing current and the automatic volume control diode takes over the controlling bias.

The audio frequency present across R-10 is impressed upon the volume control R-15 through capacitor C-34. The movable arm on the volume control selects the amount of audio signal applied to the control grid of the 6F5 audio amplifier tube and thus regulates the output of the receiver. Across the volume control, R-15, is placed a compensating network of capacitors and a resistor. The music speech switch is found in this circuit, and when closed places capacitor C-38 in shunt with C-39, which results in the accentuation of the low audio frequencies. The output of the 6F5 audio tube is resistance coupled to the grid of the 6L6 beam power tetrode. The plate circuit of the 6L6 is suitably matched to the electro dynamic loudspeaker by means of a step-down output transformer.

The tone control is found in the plate circuit of the 6F5 first audio tube and consists of capacitor C-43 in series with a variable resistor R-18 across the 6F5 plate resistor R-17. Cutting out resistance in R-18 lessens the treble response of the receiver. Between the plate of the 6F5 first audio tube and the grid of the 6L6 tetrode output tube are found two capacitors in series, C-41 and C-42. The smaller capacitor, C-42, is shorted out by the wave band switch for operation on the broadcast band. On the two short-wave bands it is left in the circuit to attenuate the low frequency response and thereby lessen the tendency toward microphonic howl.

Plate and grid voltages for all tubes are supplied by the power supply system employing a 5Z4 full-wave rectifier tube; which, together with a suitable network of resistors and capacitors, supplies the required voltages and filtering action.

ALIGNMENT PROCEDURE

The receiver should first be allowed to run for fifteen minutes to reach its approximate normal operating temperature. Before making any adjustments, it is wise to determine the correctness of the existing alignment. This may be done by supplying a signal from the test oscillator to the receiver and inserting a "Tuning Wand" into the coil involved. The tuning wand consists of a rod of insulating material having a ring of nonmagnetic metal attached to one end, and a small core of finely divided iron compacted into the opposite end. By inserting the metal ring end into the center of a particular coil the inductance of the coil is lowered, increasing its resonant frequency. Inserting the iron-filled end into the coil raises its inductance, lowering its resonant frequency. If the circuits are in exact alignment, inserting either end of the tuning wand in any coil will result in a decrease in output. When an increase in signal is obtained with the iron-filled end of the wand, a decrease in resonant frequency of that circuit by increasing its trimmer capacity is indicated. When an increase in signal is obtained with the metal ring, a decrease in trimmer capacity is indicated.

Changes Indicated by Wand

Wand	Signal	Trimmer adjustment required
Metal ring	Decrease	None
Iron filings	Decrease	
Metal ring	Increase	Decrease capacity
Iron filings	Decrease	
Metal ring	Decrease	Increase capacity
Iron filings	Increase	

Alignment Frequencies

I.F.	Band "B"	"Band "C"	Band "D"
465 kc.	580 kc.	5220 kc.	18,000 kc.
	1500 kc.		

In order to align this receiver properly, it is necessary to have available the following test equipment:

1. A modulated test oscillator with frequencies available of 465, 580, 1500, 5220, and 18,000 kc.
2. An output indicator, such as a high resistance a-c. voltmeter with a maximum scale reading of 3 to 5 volts, or a neon lamp indicator.
3. An alignment tool consisting of an insulating shaft with a small screwdriver blade.
4. A tuning wand.

The location of all trimmer capacitors is shown in Fig. 3.

1. I. F. Alignment

Set the frequency band switch of the receiver to Band "D," short circuit the antenna and ground terminals and tune the receiver to some point near maximum tuning condenser capacity where no signal is heard. Set the volume control at its maximum position and ground the chassis.

The I. F. amplifier is tuned to 465 kc.; set the test oscillator so as to produce a signal at this frequency. Connect the test oscillator output between the top grid terminal of the 6K7 2nd I. F. tube and the chassis using a .05-mfd. capacitor (RC-072) in series with the oscillator output lead to the top grid connection. First remove the grid lead connecting to the same point from the 2nd I. F. transformer. Provide a path for grid bias by connecting a 10,000-ohm resistor (RQ-083) between grid cap and top grid terminal of tube.

Connect the output meter across the voice coil of the speaker and adjust the test oscillator output control so that, with the receiver volume control at maximum, a small deflection is observed in the output meter. During both I. F. and R. F. alignment, the test oscillator signal should be maintained at the lowest level that will give a good readable output indication.

Adjust the secondary trimmer of the third I. F. transformer until a maximum output reading is obtained. Maintain a small deflection on the output meter throughout alignment by adjusting the test oscillator output. Next, adjust the primary trimmer of the third I. F. transformer for maximum output. This transformer is then adjusted and should not require readjustment when aligning transformers ahead of it.

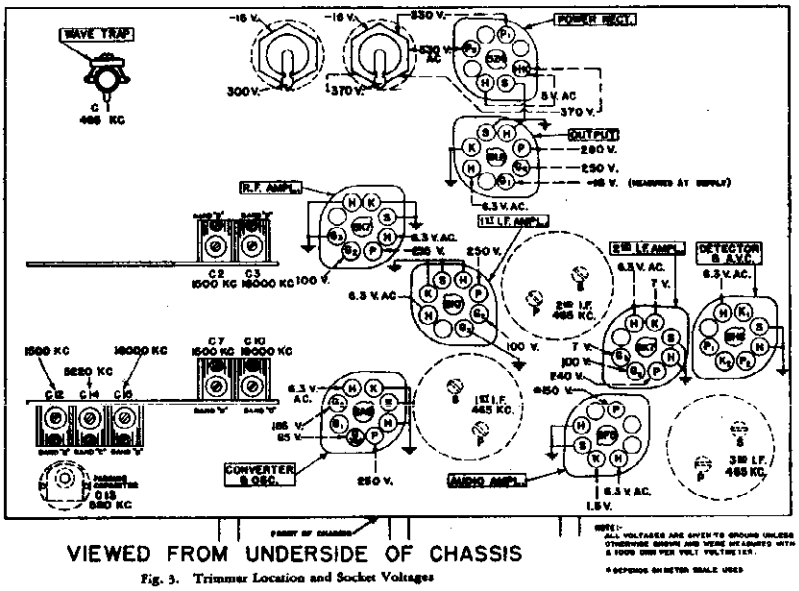

Fig. 3. Trimmer Location and Socket Voltages

©John F. Rider, Publisher

MODELS E-81, E-86
Alignment, Parts
Voltage, Dial Data

GENERAL ELECTRIC CO.

RBS-24 Radio Receivers, Models E-81 and E-86

Transfer the test oscillator connections to the top grid terminal of the 6K7 1st I. F. tube, replace the grid lead on 2nd I. F. tube and reduce the output of the test oscillator as low as possible consistent with obtaining an easily readable indication on the output meter. Adjust secondary and primary trimmers respectively on the 2nd I. F. transformer until maximum deflection of the output meter is obtained.

Transfer the test oscillator connections to the top grid terminal of the 6A8 converter tube and replace the grid cap connection on the 6K7 1st I. F. tube. It will probably be found desirable to set the tone control for minimum high response and to reduce the volume control setting to lessen noise reproduced due to the extremely high sensitivity of this receiver. Again adjust the test oscillator output to as low a value as will allow accurate adjustment. Adjust secondary and primary trimmers respectively on the 1st I.F. transformer until maximum deflection on the output meter is obtained.

I. F. alignment is now complete.

2. *I. F. Wave Trap Alignment*

Set the band switch to Band "B" and tune receiver to about 1000 kc. With the test oscillator still set at 465 kc. remove the shorting connections between antenna and ground terminals and apply this signal to the antenna terminal through a dummy antenna consisting of a 400-ohm resistor and 250-mmfd. capacitor in series. With the 465 kc. signal applied to the antenna terminal, adjust the I. F. Wave Trap Trimmer for minimum output indication.

3. *R. F. Alignment*

First check the position of the dial pointer by rotating the tuning condenser to maximum capacity position, i.e., plates fully meshed. At this position, the pointer should coincide with the end mark at the left-hand end of the scale. If it does not, it may be set by loosening the dial drum set screws and rotating the drum on the tuning condenser shaft. Hold the tuning condenser rotor while doing this, to prevent its rotating. Tighten the two set screws after the pointer is correctly set.

Band "B" (540-1610 Kc.)

Set the test oscillator for operation at 1600 kc. and connect its output to the antenna terminal of the receiver through the dummy antenna described under I. F. Wave Trap Alignment. Tune the receiver until the pointer is at 1600 on the scale. Set the tone control for minimum high response and reduce the volume control setting so as to avoid excessive noise response. Adjust the Band "B" oscillator, R. F., and antenna trimmers respectively (C-12, C-7, and C-3, Fig. 3) to give maximum deflection on the output meter. Maintain the test oscillator output at the lowest level which will give an easily readable output indication.

Now set the test oscillator at 580 kc., and tune the receiver to resonance with this signal. Adjust the 580 kc. padding capacitor, C-13, rocking the tuning condenser back and forth through resonance as the padding capacitor is adjusted and note the deflection of the tuning meter each time the receiver is tuned through resonance. Leave the padding capacitor at the setting which gives greatest deflection.

Retune the receiver to 1600 kc., and set the test oscillator for this frequency. Check the alignment by again adjusting the Band "B" oscillator, R. F. and antenna trimmers for maximum deflection on the tuning meter.

Band "C" (1680-6000 Kc.)

No trimmers are provided for alignment of the R. F. and antenna transformers in Band "C" of these receivers. Correct tracking between R. F. and antenna transformers is obtained by the action of the capacity coil, L-8, and between oscillator and the other tuned circuits by means of the adjustable oscillator trimmer C-14 and the fixed padding capacitor, C-44.

Turn the band switch to Band "C." Set the test oscillator at 5820 kc. and tune the receiver to resonance at this frequency. Adjust the Band "C" oscillator trimmer, C-14, for maximum output indication on the tuning meter, rocking the tuning condenser back and forth through resonance while making this adjustment.

Band "D" (6.0-18.0 Mc.)

Turn the band switch to Band "D." Set the test oscillator at 18,000 kc. (18.0 mc.) and tune the receiver until the pointer coincides with the 18.0 mc. mark. Adjust the Band "D" oscillator trimmer, C-15, to give maximum output indication. It will probably be found that there will be two settings of the oscillator trimmer that will give an output response. The lower capacity setting of the trimmer is the one that should be used. To be sure that correct adjustment has been obtained, tune for the image signal at 17.07 mc. with the test oscillator set at 18.0 mc. It may be necessary to increase the test oscillator output to obtain response at this point.

Retune the receiver to 18.0 mc. and adjust Band "D" antenna and R. F. trimmers, respectively (C-3 and C-10), for maximum output indication. When adjusting the R. F. trimmer, C-10, rock the tuning condenser back and forth through resonance as in the 580-kc. padding capacitor adjustment.

Alignment of the receiver is now complete.

VISUAL ALIGNMENT OF I.F.

In order to realize to full advantage the performance built into these receivers at the factory, circuit alignment using cathode ray oscilloscope equipment is much to be preferred. The oscilloscopic method is particularly advantageous in aligning the I.F. tuned circuits.

For visual alignment it is necessary to vary the frequency of an unmodulated test oscillator signal over a range extending on both sides of the peak frequency. This variation must take place in synchronism with the horizontal traverse of the cathode ray beam on its screen. The frequency modulator must, therefore, provide means for synchronizing the periodic test frequency variation with the cathode ray horizontal deflection circuit. The test oscillator may advantageously have facilities for audio frequency amplitude modulation of a fixed radio frequency test signal, as well as for frequency modulation, but audio modulation is not required for visual I. F. alignment.

Instead of an output meter across the speaker voice coil, the vertical plates of the cathode ray tube are connected across the load resistor of the diode rectifier. With the frequency modulator in operation, in conjunction with the test oscillator, the resonance curve of the circuit under test will be then shown on the screen.

Preliminary Procedure

For visual alignment, adjust the receiver controls and connect the test oscillator as outlined in the section entitled "I. F. Alignment" under "ALIGNMENT PROCEDURE." Connect the vertical deflecting plates of the cathode ray tube across the diode rectifier load resistor, R-10. The location of this resistor is clearly shown in Fig. 2.

Place the oscilloscope in operation as an output indicator and proceed as outlined in the section entitled, "I. F. Alignment."

Alignment Adjustments

Adjust the oscilloscope so that the luminescent spot on the cathode ray screen traces a horizontal line across the screen. Now place the frequency modulator and test oscillator in operation to give an unmodulated radio frequency signal varying from one side to the other of 465 kc. Adjust the oscilloscope and test oscillator controls to show a single overall resonance curve of the signal I.F. channel on the cathode ray tube screen. Do not change the test oscillator setting thereafter.

To align the I.F. transformers, follow in sequence the same procedure outlined in the sections under "ALIGNMENT PROCEDURE" describing this operation. Instead of aligning for maximum output on an output indicator, the object should be to make the curve symmetrical. If the sweep circuit is so arranged that two symmetrically reversed curves appear on the screen, the curves should be made to coincide by adjusting the I.F. trimmer capacitors.

Visual R.F. alignment may be carried out in the same general manner as above by applying a suitable frequency-modulated signal between the antenna and ground terminals of the receiver and connecting the cathode ray vertical deflecting plates across the diode rectifier load resistor.

SOCKET VOLTAGES

SOCKET VOLTAGES		Cathode to Ground Volts D.C.	Screen Grid to Ground Volts D.C.	Plate to Ground Volts D.C.	Cathode Current M.A.	Heater Volts A.C.
6K7 R. F. Amplifier		....	100	225	8.0	6.3
6A8	Oscillator	....	....	185	10.2	6.3
	Converter	....	85	250		
6K7 1st I. F. Amplifier		†	100	250	8.0	6.3
6K7 2nd I. F. Amplifier		7	100	240	2.1	....
6H6 Detector and AVC		....	....	....	....	6.3
6F5 Audio Amplifier		1.5	....	*150	0.6	6.3
6L6 Output		**	250	290	63.5	6.3
5Z4 Power-Rectifier		354 D. C.	....	660/330 R.M.S	100.0	5.0

Measured at 115 volts supply. No signal input. Volume control maximum. Voltmeter 1000 ohms per volt; measurements taken on highest scale giving accurate readable deflection.
†Shorted to gnd. on "C" & "D" Bands.
*Supply volts minus drop in load resistor.
**Bias on control grid –18.0 volts.

REPLACEMENT PARTS

*Indicates part also used on 1936 "A" line receivers.

RECEIVER ASSEMBLIES

Part No.	Description	Price
*RB-008	BOARD—Terminal Board Double-lug	$0.10
*RB-009	BOARD—Terminal Board Single-lug	.15
*RB-026	BOARD—Antenna Ground Terminal Board	.10
RB-139	BRACKET—Gang Condenser Mounting Brackets	.15
*RC-024	CAPACITOR—.005 mfd., 200 V Paper (C-42)	.25
*RC-034	CAPACITOR—.01 mfd., 200 V Paper (C-43)	.25
RC-036	CAPACITOR—.008 mfd., 200 V Paper (C-39)	.25
RC-042	CAPACITOR—.01 mfd., 1000 V Paper (C-45)	.30
*RC-046	CAPACITOR—.02 mfd., 200 V Paper (C-34, C-38)	.25
*RC-072	CAPACITOR—.05 mfd., 200 V Paper (C-4, C-11, C-22, C-28, C-33, C-35)	.25
*RC-091	CAPACITOR—.05 mfd., 400 V Paper (C-17, C-19, C-41, C-49)	.30
*RC-096	CAPACITOR—.1 mfd., 200 V Paper (C-25)	.30
*RC-123	CAPACITOR—.1 mfd., 400 V Paper (C-18)	.35
RC-152	CAPACITOR—.25 mfd., 400 V Paper (C-44)	.40
*RC-205	CAPACITOR—20 mmfd Mica (C-6)	.35
*RC-210	CAPACITOR—50 mmfd Mica (C-21)	.25
RC-242	CAPACITOR—150 mmfd. Mica (C-37)	.25
*RC-258	CAPACITOR—250 mmfd. Mica (C-31, C-32)	.25
RC-291	CAPACITOR—400 mmfd. Mica (C-40)	.30
*RC-344	CAPACITOR—1300 mmfd. Mica (C-36)	.35
RC-380	CAPACITOR—2850 mmfd. Mica (C-16)	.50
RC-414	CAPACITOR—16 mfd., 380 V Wet Electrolytic (C-46)	1.25
*RC-415	CAPACITOR—16 mfd., 300 V Wet Electrolytic (C-47)	$1.10
RC-563	CAPACITOR—3 mfd., 350 V; 3 mfd., 150 V Dry Elec. (C-30, C-48)	1.20
RC-619	CAPACITOR—Oscillator Padder Capacitor [illegible] (C-13)	.35
RC-630	CAPACITOR—Twin Trimmers; antenna and R. F. Band B & D (C-2, C-3; C-7, C-10)	.40
RC-631	CAPACITOR—Triple Trimmers; oscillator bands B, C, & D (C-12, C-14, C-15)	.60
RC-711	CONDENSER—Gang Tuning Condensers [illegible] mmfd. (C-5, C-8, C-9)	4.75
RC-755	CAPACITOR—Line Capacitors	.40
RC-816	CABLE—Speaker Cable (Complete)	.60
RC-860	CORD—Power Cord	.65
RC-992	CUSHION—Gang Condenser Mounting Cushion (Pkg. of 3)	.10
RE-011	ESCUTCHEON—Escutcheon Plate (with [illegible])	1.25
*RF-002	FOOT—Chassis Mounting Foot	.20
*RG-001	GRID CAP—Grid Clip (Pkg. of 5)	.10
RG-101	GASKET—Escutcheon Felt Gasket	.10
RG-102	GASKET—Escutcheon Rubber Gasket	.20
*RK-004	KNOB—Control Knob (Push-on) (Pkg. of 5)	.40
RL-017	COIL—Antenna Coil Band B & C (L-2, L-3, L-4, L-5)	1.15
RL-018	COIL—Antenna Coil Band D (L-6, L-7)	.75
RL-123	COIL—R.F. Coil Band B & C (L-8, L-9)	1.10
RL-124	COIL—R.F. Coil Band D (L-10, L-11)	.75
RL-225	COIL—Oscillator Coil Band B (L-12, L-13)	.85
RL-226	COIL—Oscillator Coil Band C (L-14, L-15)	.85
RL-227	COIL—Oscillator Coil Band D (L-16, L-17)	.85
*RQ-059 (RR-014)	RESISTOR—1000 ohm, ¼ watt Carbon (R-16) (Pkg. of 5)	.70
RQ-067	RESISTOR—2200 ohm, ½ watt Carbon (R-4, R-7, R-12, R-18) (Pkg. of 5)	$0.60
RQ-075	RESISTOR—4700 ohm, ¼ watt Carbon (R-6) (Pkg. of 5)	.60
*RQ-083 (RR-081)	RESISTOR—10,000 ohm, ¼ watt Carbon (R-14) (Pkg. of 5)	.60
RQ-099	RESISTOR—47,000 ohm, ¼ watt Carbon (R-3) (Pkg. of 5)	.60
RQ-103	RESISTOR—56,000 ohm, ¼ watt Carbon (R-8) (Pkg. of 5)	.60
*RQ-107 (RR-050)	RESISTOR—100,000 ohm, ¼ watt Carbon (R-1, R-2, R-17, R-19) (Pkg. of 5)	.70
RQ-115	RESISTOR—220,000 ohm, ¼ watt Carbon (R-11, R-20) (Pkg. of 5)	.70
RQ-117	RESISTOR—270,000 ohm, ¼ watt Carbon (R10) (Pkg. of 5)	.70
RQ-137	RESISTOR—1.8 Meg. ¼ watt Carbon (R-9) (Pkg. of 5)	.70
*RQ-283 (RR-183)	RESISTOR—10,000 ohm ½ watt Carbon (R-5) (Pkg. of 5)	.70
RR-717	RESISTOR—Candohm Tapped Bleeder Resistor (R-21, R-22, R-23, R-24, R-25, R-26)	1.00
RS-136	SHIELD—1st & 2nd I.F. Coil Shield Can	.20
RS-137	SHIELD—3rd I.F. Coil Shield Can	.20
*RS-200	SOCKET—8 Pin Tube Socket (Pkg. of 5)	.75
*RS-204	SOCKET—5 Pin Tube Socket (Pkg. of 5)	.75
RS-324	SWITCH—Band Change Switch (S-1, S-2, S-3)	2.75
RS-423	SPRING—Knob-spring (Push-on type) Pkg. of 10	.25
RT-087	TRANSFORMER—Power Transformer 115 V. 50/60 cycles (T-2)	5.50
RT-088	TRANSFORMER—Power Transformer 115 V. 25/60 cycles (T-2)	10.00
RT-089	TRANSFORMER—Universal Power Transformer 105/130, 200/250 V. 40/60 cycles (T-2)	10.25
RT-223	TRANSFORMER—1st and 2nd I.F. Transformer (Complete) (L-18, L-19; C-23, C-24) (L-20, L-21; C-26, C-27)	1.50
RT-224	TRANSFORMER—3rd I.F. Transformer (Complete) (L-22, L-23; C-29, C-30)	1.75
RT-710	TONE CONTROL—Tone Control and Speech Clarifier Switch (R-18, S-5)	1.00
RV-015	VOLUME CONTROL—Volume Control and Power Switch (R-15, S-4)	1.25
RW-006	WINDOW—Escutcheon Window	.50
RW-401	WAVE TRAP—Wave Trap Coil Assembly (Complete) (L-1, C-1)	.90

8 IN. SPEAKER ASSEMBLY E-81

Part No.	Description	Price
RC-909	CONE—8-in. Type Cone and Voice Coil (Gasket incl.)	1.15
RC-990	CLAMP—8-in. Cone Spider Clamp and Screw	.05
*RP-012	PLUG—Female Speaker Plug	$0.20
RP-044	PLUG—Male Speaker Plug	.20
RP-052	PLUG—Female Speaker Plug (Late Prod.)	.20
RP-053	PLUG—Male Speaker Plug (Late Prod.)	.20
RS-093	SPEAKER—8-in. Type Speaker (complete with Output Transformer) (L-24, L-25, L-26, T-1)	7.55
RS-416	SPRING—Voice Coil Leads Spring (Pkg. of 2)	.10
RT-414	TRANSFORMER—Output Transformer (T-1)	1.40

12 IN. SPEAKER ASSEMBLY E-86

Part No.	Description	Price
RC-910	CONE—12-in. Type Cone and Voice Coil (Gasket incl.)	1.45
RC-991	CLAMP—12-in. Cone Spider Clamp and Screw	.05
*RP-012	PLUG—Female Speaker Plug	.20
RP-044	PLUG—Male Speaker Plug	.20
RP-052	PLUG—Female Speaker Plug (Late Prod.)	.20
RP-053	PLUG—Male Speaker Plug (Late Prod.)	.20
RS-093	SPEAKER—12-in. Type Speaker (complete with Output Transformer) (L-24, L-25, L-26, T-1)	10.00
RS-416	SPRING—Voice Coil Leads Spring (Pkg. of 2)	.10
RT-414	TRANSFORMER—Output Transformer (T-1)	1.40

PRICES SUBJECT TO CHANGE WITHOUT NOTICE

DIAL MECHANISM

Part No.	Description	Price
RB-136	BRACKET—Band Switch Operating Shaft Bracket (35)	.10
RB-137	BRACKET—Dial Mask and Reflector Box Support Bracket (26)	.10
RB-138	BRACKET—Dial Lamp Bracket (20)	.20
RB-511	BOX—Dial Mask and Reflector Box (2)	.50
RC-817	CABLE—Drive Cable (Pkg. of 5) (10)	.40
RC-818	CABLE—Band Change Cable (Pkg. of 5) (12)	.40
RC-993	CUSHION—Rubber Buffer Cushion (Dial) (Pkg. of 2) (29)	.10
RC-994	CAP—Scale Cap (Free End) (37)	.10
RC-995	CAP—Scale Cap (Pulley End) (38)	.10
RD-035	DIAL—"Slide-Rule" Dial Scale	.65
RD-038	DRIVE—Tuning Condenser Reduction Drive (30)	1.10
RG-006	GEAR—Band Switch Drive Gear (40)	.15
RG-007	GEAR—Band Switch and Dial Operating Gear (41)	.20
RP-047	POINTER—Dial Pointer Pkg. of 5 (11)	.25
RP-048	PULLEY—Gang Drive Pulley (14)	.35
RP-049	PULLEY—Drive Cord Idler Pulley (4)	.15
RS-417	SPRING—Dial Scale Spring (7)	.05
RS-418	SPRING—Gang Drive Pulley Spring (16)	.05
RS-807	SUPPORT—Dial Scale Spring Support (8)	.10
RS-907	SHAFT—Band Switch Drive Gear Shaft (36)	.15

ADJUSTMENT OF DIAL MECHANISM

To Replace Drive Cable

Remove the drive cable to be replaced. Referring to Fig. 4, rotate drive wheel (14) counterclockwise until condenser plates are open. Place the end of the cable having an eyelet in slot [A]. Thread cable as shown making sure cable passes *over* pin [B], and runs along the *correct* grooves, the looped end hooking over spring (16). Check the position of the drive wheel on the condenser shaft making sure that the cable coming off the right-hand idler pulley lines up with the grooves in the drive pulley. Also, as the condenser plates become fully closed, the drive wheel (14) should just touch the bushing [D] of the tuning shaft (39). With the drive wheel in this position place the pointer on rail [E] and, with the tip of the pointer on the extreme left-hand scale division, crimp pointer tab onto the drive cable.

To Adjust Pointer for Scale Calibration

Three positions of the dial pointer cable are provided to adjust the pointer up or down scale. The position shown on Fig. 4, with the cable over pin [B] is the medium position. By changing the cable to the position between pins [B] and [C] the pointer may be moved *down* scale. The cable position below pin [C] moves the pointer *up* scale from the medium position.

To Replace Dial Scale

Remove the band change cable (12). Then remove the end support (8) held by a single self-tapping screw and withdraw the scale assembly from the housing. Replace the end caps on the new scale and re-assemble. Before attaching band change cable (12) to the gear (41), the spring (7) should be given two full turns to give the proper tension to the cable.

To Adjust Rotation of Scale

Bend tab [F] up or down to give the correct position of the scale divisions with respect to the pointer tip. The pointer should slightly overlap the divisions.

Pilot Lamps
Mazda No. 46.

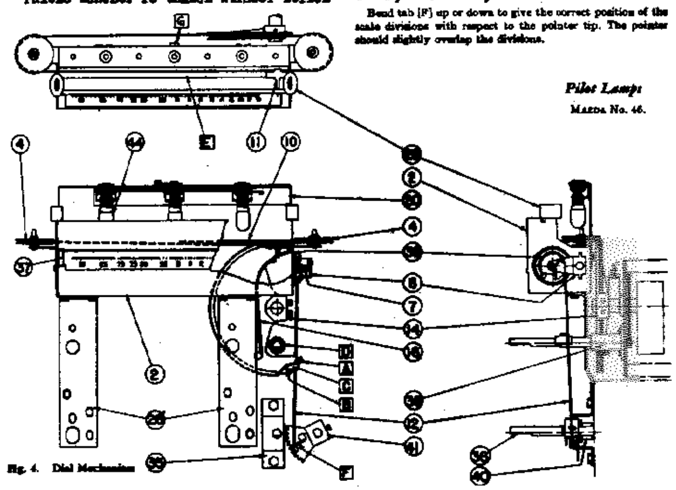

Fig. 4. Dial Mechanism

©John F. Rider, Publisher

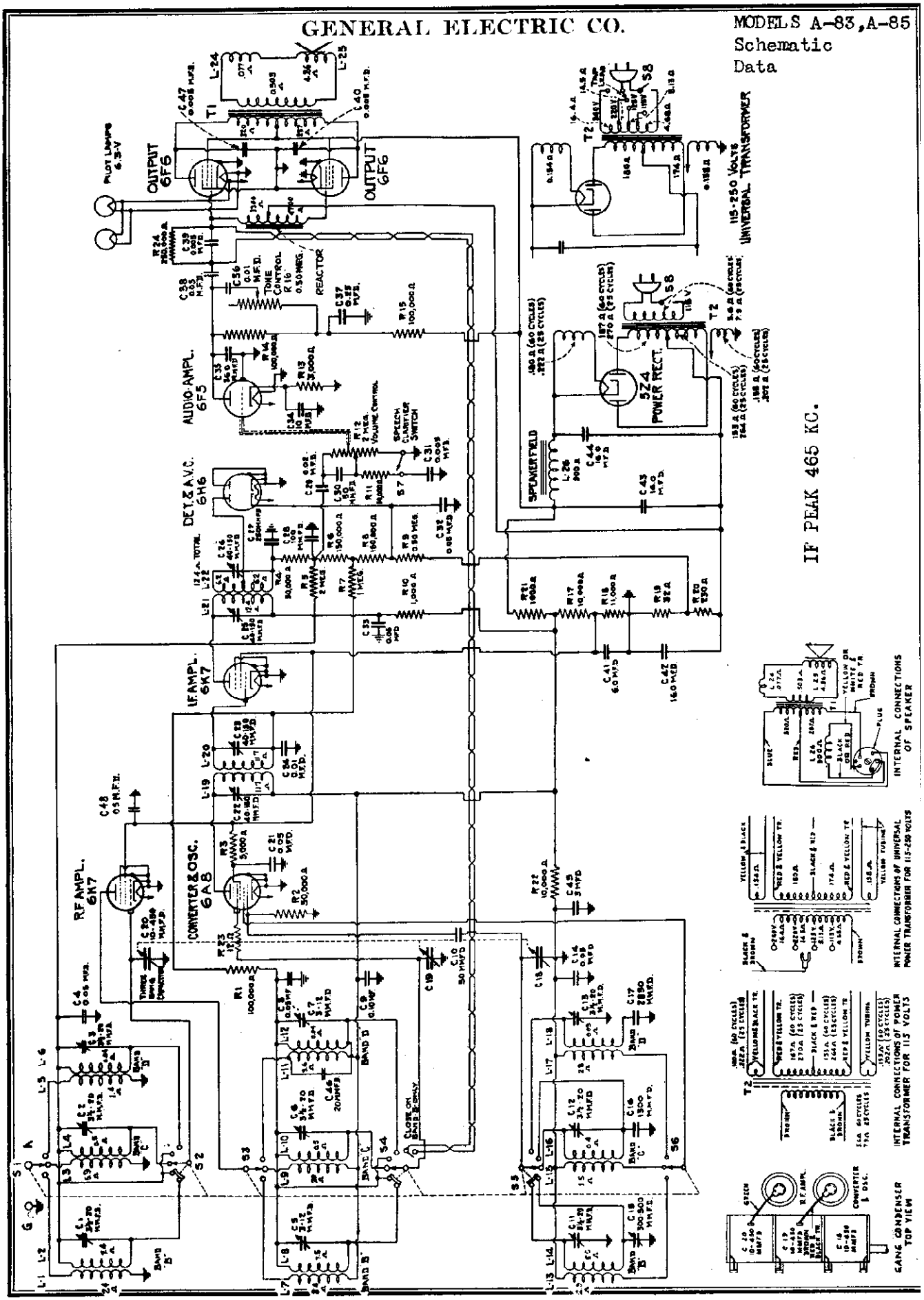

©John F. Rider, Publisher

MODELS A-83, A-85
Chassis Wiring
Coil Data

GENERAL ELECTRIC CO.

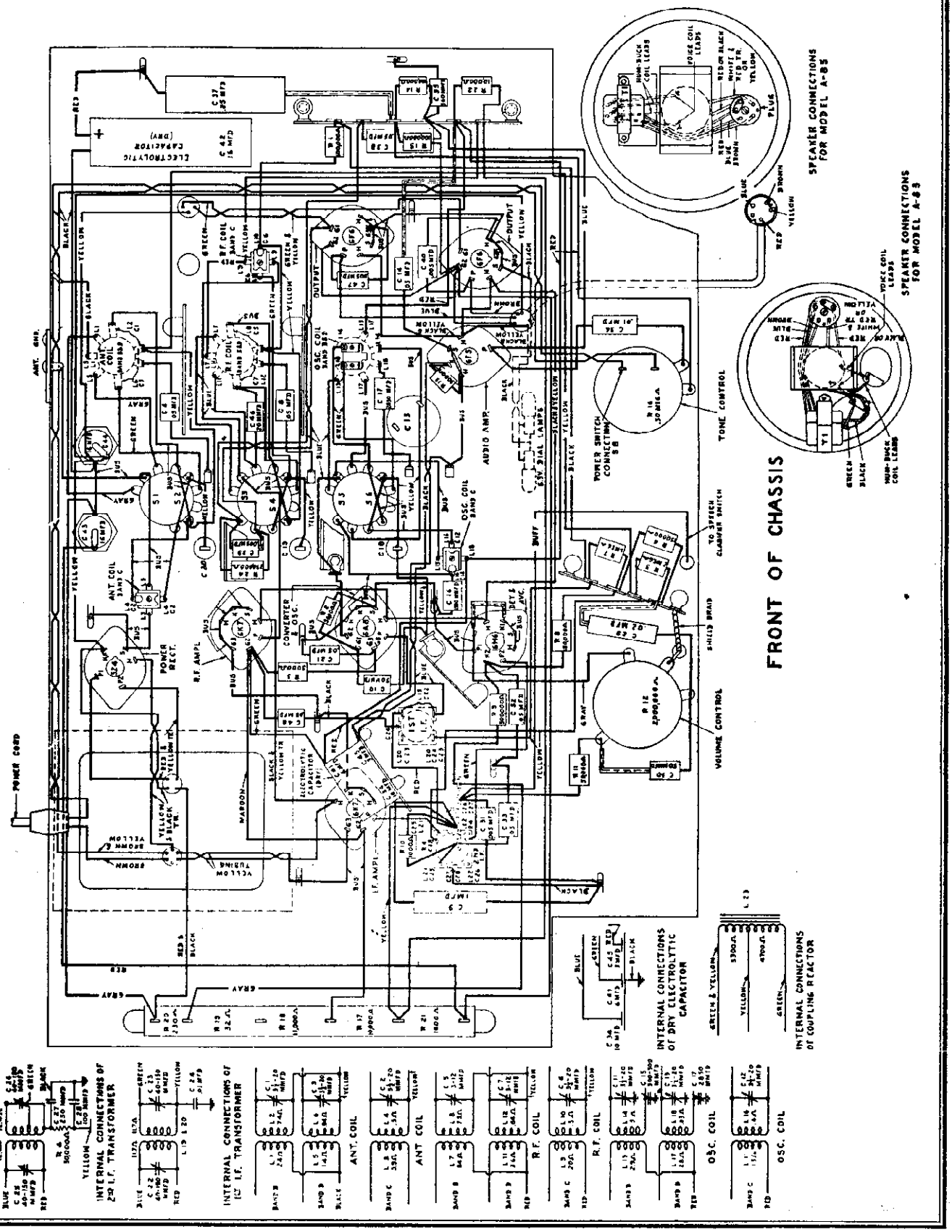

©John F. Rider, Publisher

©John F. Rider, Publisher

SERVICE DATA

Physical Specifications

Model	A-83	A-85
Height	20⅞ in.	40¾ in.
Width	14¾ in.	23⅝ in.
Depth	11⅞ in. (Knobs project beyond)	11½ in. (Knobs project beyond)
Weight packed	40 lb.	70 lb.

Electrical Specifications

Rating Label	Power Supply (Volts)	Frequency (Cycles)	Power Consumption (Watts)
A	115	50–60	100
C	115	25–60	105
V	105–130 and 200–250	40–60	105

NOTE: Taps on universal transformers (Rating "V") are accessible by removing the cap cover mounted on the top of the transformer. Schematic and wiring diagrams of the universal transformer are shown in Fig. 1 and 2, respectively.

Tuning Frequency Range

Band "B"	540–1720 kc
Band "C"	1.72–5.8 mc (1720–5800 kc)
Band "D"	5.8–18.0 mc (5800–18,000 kc)

Tuning Control Drive Ratio

Fast Tuning	5½ to 1
Vernier Tuning	55 to 1

Electrical Power Output

Undistorted	6 watts
Maximum	11 watts

Loud-speaker—Electrodynamic

Cone Model A-83 9 in. type.
Model A-85 11 in. type.
Cone Coil Impedance: 5 ohms at 400 cycles

Tubes

R. F. Amplifier.....6K7 Triple-grid Super-control Amplifier
Converter and Oscillator.....6A8 Pentagrid Converter
I. F. Amplifier.....6K7 Triple-grid Super-control Amplifier
Detector and AVC..6H6 Twin Diode
Audio Amplifier....6F5 Detector Amplifier Triode
Output.....2—6F6 Power Amplifier Pentodes
Power Rectifier.....5Z4 Full-wave Rectifier
Dial Lamps.....MAZDA No. 46

DESCRIPTION OF ELECTRICAL CIRCUIT

Models A-83 and A-85 employ eight metal envelope tubes to perform the above functions in a superheterodyne circuit, giving the excellent selectivity and sensitivity inherent in this type circuit. Separate groups of coils are used for each frequency band. Ample undistorted power output is obtained through use of diode detection and a push-pull power amplifier final audio stage.

The signal from the antenna is applied to the control grid of the 6K7 R. F. amplifier tube through the antenna coil, the secondary of which is tuned to the incoming signal by the rear section of the main tuning condenser. The secondary of the coil for the band next lower in frequency to the one in use is short-circuited by the band switch to prevent absorption of energy at its resonant frequency which falls in the next higher band.

The amplified radio frequency signal is impressed on the control grid of the 6A8 converter and oscillator tube through the R. F. coil, the secondary of which is tuned to the signal frequency by the center section of the main tuning condenser. In the 6A8 tube the incoming signal is combined with the local oscillator signal which is 465 kc higher in frequency. The local signal is generated by the oscillator elements of this tube and the proper frequency difference is maintained throughout the tuning range by the front section of the main tuning condenser in conjunction with the oscillator coil and padding capacitors.

The combination of the signal frequency with the local oscillator frequency in the converter tube produces the intermediate frequency of 465 kilocycles. This particular intermediate frequency is chosen to reduce image response and improve short-wave performance. The intermediate frequency amplifier consists of a 6K7 tube and two transformers, each with two tuned circuits.

The output of the I. F. amplifier is applied to the 6H6 diode rectifier, which is a combined detector and automatic volume control tube. The direct current component of the rectified signal produces a voltage drop across R-6 and R-8. This voltage drop provides automatic bias for the R. F. and I. F. amplifier and converter tubes and so gives automatic volume control action. Full automatic bias voltage is applied to the R. F. amplifier tube, while half this voltage is applied to the converter tube and I. F. amplifier, which handle a somewhat larger signal voltage than the R. F. amplifier.

Condenser C-29 couples the audio signal to the volume control (R-12) and to the speech clarifier network (C-30, C-31, R-11). When switch S7 is open the frequency response is correct for music, while closing this switch raises the level of certain frequencies and renders speech extremely understandable. The amount of signal impressed on the control grid of the 6F5 audio amplifier tube is selected by the variable arm on the volume control, this in turn determining the output of the receiver.

The output of the 6F5 tube is capacitively coupled to the coupling reactor (L23) which gives a balanced excitation to the 6F6 push-pull power amplifier. The tone control consisting of R-16 and C-36 is connected across the 6F5 plate resistor. Cutting out resistance in R-16 lessens the treble response of the receiver.

The 6F6 tubes are connected in pentode and their plate circuit is suitably matched to the dynamic speaker by a step-down transformer T1.

Plate and grid voltages for all tubes are supplied by the power supply system employing a 5Z4 full-wave rectifier tube which, together with a suitable network of resistors and capacitors, supplies the required voltages and filtering action.

ALIGNMENT PROCEDURE

The receiver should first be allowed to run for fifteen minutes in order to reach its approximate normal operating temperature. Before making any adjustments, it is wise to determine the correctness of the existing alignment. This may be done by supplying a signal at the alignment frequency from the test oscillator to the receiver and inserting a "Tuning Wand" into the coil involved. The "Tuning Wand" consists of a bakelite rod having a brass cylinder attached to one end, and a small core of finely divided iron compacted into the opposite end. By inserting the brass cylinder end into the center of a particular coil, through the opening provided in the top of the shield, the inductance of the coil is lowered, increasing its resonant frequency. Inserting the iron-filled end into the coil raises its inductance, lowering its resonant frequency. If the circuits are in exact alignment, inserting either end of the tuning wand in any coil will result in a decrease in output. When an increase in signal is obtained with the iron-filled end of the wand, a decrease in resonant frequency of that circuit by increasing its trimmer capacity is indicated. When an increase in signal is obtained with the brass cylinder, a decrease in trimmer capacity is indicated.

Changes Indicated by Wand

Wand	Signal	Trimmer Adjustment Required
Brass cylinder	Decrease	None
Iron filings	Decrease	
Brass cylinder	Increase	Decrease capacity
Iron filings	Decrease	
Brass cylinder	Decrease	Increase capacity
Iron filings	Increase	

Fig. 3 shows the location of the antenna, R. F., and oscillator coils for each of the three frequency bands of Model A-83 and A-85 receivers.

ALIGNMENT FREQUENCIES

I. F.	Band "B"	Band "C"	Band "D"
465 kc	580 kc 1500 kc	5220 kc	18,000 kc

In order to align these receivers properly, it is necessary to have available the following test equipment:

1. A modulated test oscillator with frequencies available of 465, 580, 1500, 5220 and 18,000 kc.
2. An output indicator, such as a high resistance a-c voltmeter with a maximum scale reading of 3 to 5 volts, or a neon lamp output indicator.
3. An alignment tool consisting of an insulating shaft with a small screw-driver blade.
4. A tuning wand.

The location of all trimmer capacitors, as well as socket voltages to chassis, is shown in Fig. 4.

1. I. F. Alignment

In order to maintain proper bias voltage during I. F. alignment, the test oscillator should be connected to the 6A8 converter tube control grid through a .01-mfd. (or larger) capacitor. The normal grid cap connection should be removed and a 25,000-ohm to 50,000-ohm resistor connected between it and the 6A8 control grid. The ground side of the test oscillator may then be connected directly to the chassis.

Set the frequency band switch of the receiver to Band "B", short-circuit the antenna and ground terminals and tune the receiver at some point above 1500 kc so that no signal is heard. Set the volume control at its maximum position and ground the chassis.

The I. F. amplifier is tuned to 465 kc; set the test oscillator dial at this frequency. Connect the output meter across the cone coil of the speaker and adjust the test oscillator output control so that, with the receiver volume control at maximum, a small deflection is observed in the output meter. During both I. F. and R. F. alignment, the test oscillator signal should be maintained at the lowest level that will give a good readable output indication.

Adjust the secondary trimmer of the second I. F. transformer until a maximum output reading is obtained. Maintain a small deflection on the output meter throughout alignment by adjusting the test oscillator output. Next, adjust the primary trimmer of the second I. F. transformer for maximum output. Continue this procedure, adjusting the secondary trimmer of the first I. F. transformer and lastly the primary trimmer of the first I. F. transformer. After completing this procedure, repeat it a second time for final alignment. The I. F. alignment will then be complete.

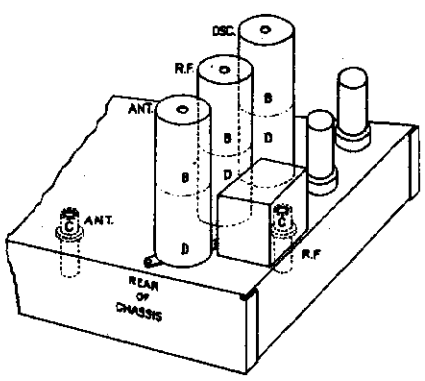

Fig. 3. Coil Locations

2. R. F. Alignment

Band "B" requires four trimmer adjustments, while Band "C" and Band "D" each require three adjustments. Care should be taken to adjust only the trimmers of the band under test. Check the position of the dial pointer as outlined in the section on adjustment of the dial mechanism. Make sure the antenna and ground terminals of the receiver are not short-circuited and connect to them the output from the test oscillator, preferably using a dummy antenna of 250 mmfd. in series with 200 ohms between the test oscillator and receiver antenna terminal. Connect the output indicator across the speaker cone coil.

Band "B"—540-1720 kc

Set the frequency band switch to the position where the dial indicates the above range. Tune the test oscillator to 1500 kc and set the dial pointer on the receiver to this frequency. Adjust the Band "B" oscillator trimmer for maximum output, keeping the receiver volume control at its extreme clockwise position and adjusting the test oscillator output to maintain a small reading on the output indicator. When optimum adjustment on the Band "B" oscillator trimmer is obtained, adjust the Band "B" R. F. and antenna trimmers for maximum output.

Now tune the test oscillator to 580 kc and set the receiver to that frequency. Slowly rocking the tuning condenser back and forth through the signal, adjust the 580 kc padding capacitor for maximum output. When this has been done, return to 1500 kc on the receiver and test oscillator and recheck the alignment for maximum output. Band "B" should now be in alignment.

Band "C"—1.72–5.8 mc (1720–5800 kc)

Set the band switch to the position where the dial indicates the above range. Tune the test oscillator to 5220 kc and set the dial pointer on the receiver to this frequency. Adjust the Band "C" oscillator trimmer for maximum output, using the first peak obtained when increasing the capacitance from minimum to maximum.

Check for the image signal which should be received at about 4290 kc on the receiver dial. It should be necessary to increase input to the receiver from the test oscillator for this check. Retune the receiver to the correct scale reading (5220 kc) and reduce the test oscillator output to its previous value. Then adjust the Band "C" R. F. and antenna trimmers for maximum output.

Band "D"—5.8–18.0 mc (5800–18,000 kc)

Set the band switch to the position where the dial indicates the above range. Tune the test oscillator to 18,000 kc and set the dial pointer on the receiver to this frequency. Adjust the Band "D" oscillator trimmer for maximum output, using the first peak obtained when increasing the capacitance from minimum to maximum.

Check for the image signal which should be received at about 17070 on the receiver dial. It may be necessary to increase input to the receiver from the test oscillator for this check. Retune the receiver to the correct scale reading (18,000 kc) and reduce the test oscillator output to its previous value.

Reduce the capacitance of the R. F. trimmer to a minimum. While slowly rocking the tuning condenser through the 18,000 kc point, increase the Band "D" R. F. trimmer capacitance until a maximum response point is obtained. The Band "D" antenna trimmer should next be peaked. It is not necessary to rock the tuning condenser while making this last adjustment.

MODELS A-83, A-85
Socket, Trimmers
Voltage, Dial Data
Parts List

GENERAL ELECTRIC CO.

PRICES SUBJECT TO CHANGE WITHOUT NOTICE

REPLACEMENT PARTS

Stock No.	Description	List Price
RB-009	BOARD—Terminal Board Single-lug Pkg. 4	$0.10
RB-023	BOARD—Terminal Board under 2nd I. F. Trans.	.10
RB-026	BOARD—Antenna Ground Terminal Board	.10
RB-027	BOARD—Terminal Board on Front Wall beside Band Switch	.10
RB-028	[illegible]	[illegible]
RB-124	[illegible]	[illegible]
RB-300	[illegible]	[illegible]
RC-028	CAPACITOR—[illegible]	[illegible]
RC-034	CAPACITOR—[illegible]	[illegible]
RC-030	CAPACITOR—[illegible]	[illegible]
RC-034	CAPACITOR—[illegible]	[illegible]
RC-040	CAPACITOR—[illegible]	[illegible]
RC-046	CAPACITOR—[illegible]	[illegible]
RC-072	CAPACITOR—[illegible]	[illegible]
RC-091	CAPACITOR—[illegible]	[illegible]
RC-129	CAPACITOR—[illegible]	[illegible]
RC-151	CAPACITOR—[illegible]	[illegible]
RC-209	CAPACITOR—[illegible]	[illegible]
RC-210	CAPACITOR—[illegible]	[illegible]
RC-235	CAPACITOR—[illegible]	[illegible]
RC-258	CAPACITOR—[illegible]	[illegible]
RC-281	CAPACITOR—[illegible]	[illegible]
RC-344	CAPACITOR—[illegible]	[illegible]
RC-350	CAPACITOR—[illegible]	[illegible]
RC-406	CAPACITOR—[illegible] Wet Electrolytic (C-44)	[illegible]
RC-415	CAPACITOR—18 mfd. 390 V. Wet Electrolytic (C-43)	1.10
RC-525	CAPACITOR—3 mfd. 350 V.; 6 mfd. 150 V.; 10 mfd. 25 V.; Dry Electrolytic (C 34, C-41, C-45)	2.00
RC-526	CAPACITOR—16 mfd. 25 V. Dry Electrolytic (C-42)	.90
RC-608	CAPACITOR—Oscillator Padder Capacitor 300-500 mmfd. (C-15)	.40
RC-611	CAPACITOR—Twin Trimmers Cap. Osc. Band B&D (C-11, C-13)	.40
RC-612	CAPACITOR—Twin Trimmers R. F. Band B&D (C-5, C-7)	.80
RC-613	CAPACITOR—Twin Trimmers Ant. Band B&D (C-1, C-3)	.80
RC-614	CAPACITOR—Ant. R. F. or Osc. Band C Trimmer Capacitor (C-2, C-6, or C-12)	.30
RC-615	CAPACITOR—1st and 2nd I. F. Trimmer Capacitors (C-22, C-23, or C-25, C-26)	.50
RC-707	CONDENSER—Three Gang Tuning 10-450 mmfd. (C-18, C-19, C-20)	6.40
RC-864	CORD—[illegible]	.80
RC-976	CUSHION—[illegible] Mounting Cushion Pkg. of 3	.10
RE-005	[illegible]	.80
RF-002	FOOT—Chassis Mounting Foot White Rubber	.30
RF-008	FOOT—Chassis Mounting Foot Red Rubber	.30
RG-001	GRID CAP—[illegible]	.10
RK-004	KNOB—[illegible]	.40
RL-012	COIL—Ant. Coil Only Band B&D (L-1, L-2, L-5, L-6)	1.25
RL-013	COIL—Antenna Coil Only Band C (L-3, L-4)	.70
RL-114	COIL—R. F. Coil Only Band B&D (L-7, L-8, L-11, L-12)	1.45
RL-115	COIL—R. F. Coil Only Band C (L-9, L-10)	.75
RL-215	COIL—Oscillator Coil Band B&D (L-13, L-14, L-17, L-18)	1.10
RL-216	COIL—Oscillator Coil Only Band C (L-15, L-16)	.65
RL-303	REACTOR—Interstage Coupling Reactor	4.10
RL-405	COIL—1st I. F. Transformer Coil (L-19, L-20)	1.35
RL-406	COIL—2nd I. F. Transformer Coil (L-21, L-22)	1.35
RN-001	NUT—Escutcheon Nut, Pkg. 10	.45
RP-014	PLATE—Escutcheon Mounting Plate, Pkg. 2	.25
RR-014	RESISTOR—1000 ohm ¼ watt Carbon (R-10), Pkg. 5	.70
RR-016	RESISTOR—3000 ohm ¼ watt Carbon (R-3), Pkg. 5	.70
RR-035	RESISTOR—50,000 ohm ¼ watt Carbon (R-21, R-31), Pkg. 5	.70
RR-036	RESISTOR—[illegible] ¼ watt carbon (R-4), Pkg. 5	.70
RR-030	RESISTOR—[illegible] ¼ watt Carbon (R-12), Pkg. 5	.70
RR-040	RESISTOR—[illegible] ¼ watt Carbon (R-1, R-14, R-19), Pkg. 5	.70
RR-054	RESISTOR—[illegible] ¼ watt Carbon (R-5, R-8), Pkg. 5	.70
RR-063	RESISTOR—[illegible] ¼ watt Carbon (R-24), Pkg. 5	.70
RR-067	RESISTOR—1 megohm ¼ watt Carbon (R-7), Pkg. 5	.70
RR-068	RESISTOR—2 megohm ¼ watt Carbon (R-6), Pkg. 5	.80
RR-182	RESISTOR—10,000 ohms ½ W. Carbon (R-32), Pkg. 5	$0.70
RR-308	RESISTOR—6A8 Grid Lead Resistor 12 ohms (R-33)	.10
RR-706	RESISTOR—Candohm Tapped Bleeder Resistor (R-21, R-17, R-18, R-16, R-20)	.90
RR-707	RESISTOR—500,000 ohm ¼ watt Carbon (R-9), Pkg. 5	[illegible]
RS-122	SHIELD—Ant. R. F. or Osc. Coil Can	[illegible]
RS-123	SHIELD—1st I. F. Shield Can	[illegible]
RS-124	SHIELD—2nd I. F. Shield Can	[illegible]
RS-157	SHIELD—Small Partition Shield for Band Switch, Pkg. 2	.10
RS-158	SHIELD—Large Partition Shield for Band Switch, Pkg. 2	[illegible]
RS-159	SHIELD—Shield Plate Near Volume Control	.10
RS-160	SHIELD—Shield Plate Supporting Dry Electrolytic Cap.	.15
RS-200	SOCKET—Eight Pin Socket, Pkg. 5	.75
RS-315	SWITCH—Band Change Switch (S-1 to S-6 incl.)	2.65
RS-316	SWITCH—Speech Clarifier Switch (S-7)	.15
RT-084	TRANSFORMER—Power Transformer 105-125 V. 50/60 cycles (T-2)	6.40
RT-085	TRANSFORMER—Power Transformer 105-125 V. 25/60 cycles (T-2)	
RT-086	TRANSFORMER—Universal Power Transformer 105/130 200/250 V. 40-60 cycles (T-2)	
RT-217	TRANSFORMER—1st I. F. Transformer complete	2.00
RT-218	TRANSFORMER—2nd I. F. Transformer complete	2.50
RT-708	[illegible]	.95
RV-800	VOLUME CONTROL—[illegible]	.80
RW-003	WINDOW—Dial Window	.15
RW-101	WASHER—Felt Washer for Cont[illegible]	.45
RW-102	WASHER—Insulating Washer for [illegible] lytics, Pkg. 4	.10
RX-013	SCREW ASSEMBLY—Chassis Mounting Screw Assembly	.10
	SPEAKER ASSEMBLY A-83	
RB-089	BOARD—Speaker Terminal Board, Pkg. 2	.10
RC-906	[illegible] (gaskets incl.)	1.25
RP-012	PLUG—Female Speaker Plug	.30
RP-022	PLUG—Male Speaker Plug	.30
RS-030	SPEAKER—[illegible] Complete	8.25
RT-400	TRANSFORMER—Output Transformer (T-1)	1.80
	SPEAKER ASSEMBLY A-85	
RC-908	CONE—11 in. Type Cone and Voice Coil (Gasket incl.)	1.15
RP-012	PLUG—Female Speaker Plug	.30
RP-032	PLUG—Male Speaker Plug	.25
RS-035	SPEAKER—11 in. Type Speaker Complete	10.70
RT-409	TRANSFORMER—Output Transformer (T-1)	1.80
	DIAL MECHANISM	
RB-117	BRACKET—Dual Lamp Bracket	[illegible]
RC-805	CABLE—Drive Cable, Pkg. of 5	[illegible]
RC-856	CORD—Drive Cord Pkg. of 5	[illegible]
RC-954	CAP—Scale Cap Assembly (Gear end)	[illegible]
RC-955	CAP—Scale Cap (Free End)	[illegible]
RC-958	CUSHION—Rubber Buffer Cushions Pkg. 3	.10
RD-006	DRIVE—Automatic Vernier Reduction Drive	1.00
RD-012	DRUM—Drive Drum Assembly	.35
RD-020	DIAL—Dial Scale	.60
RD-024	DIAL—Tubular Dial Scale and Drive Mechanism Complete	4.00
RF-200	FASTENER—Dial Scale End Fastener Pkg. of 10	.10
RG-002	GEAR—Dial Gear Assembly	.15
RG-200	GUIDE—Dial Pointer Guide, Pkg. 5	.15
[illegible]	[illegible]er Pkg. of 2	.15
[illegible]	[illegible] Idler Pulley Pkg. of 2	.10
[illegible]	[illegible] Mounting Plate Assembly	1.15
[illegible]	[illegible]	.30
[illegible]	[illegible]	.10
[illegible]	[illegible] Washers	.15
[illegible]	[illegible]	.35

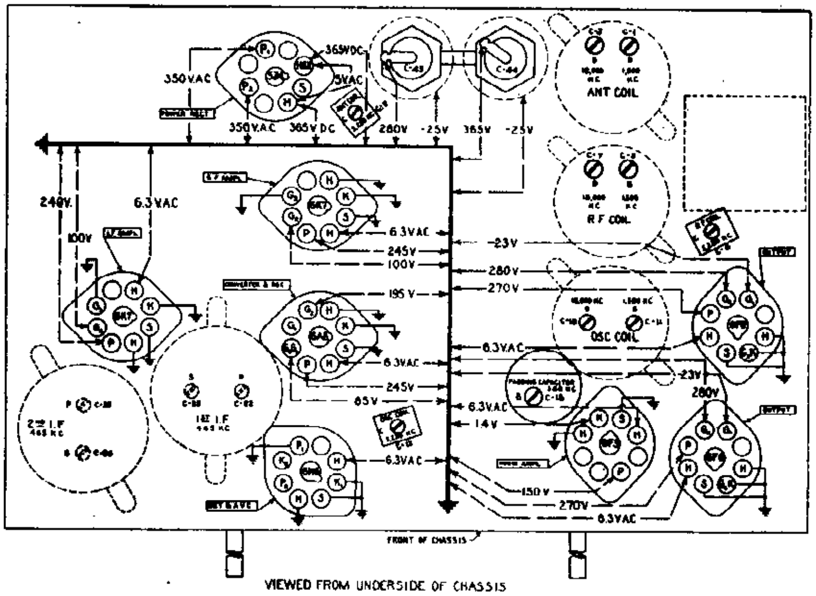

Fig. 4. Trimmer Locations and Socket Voltages

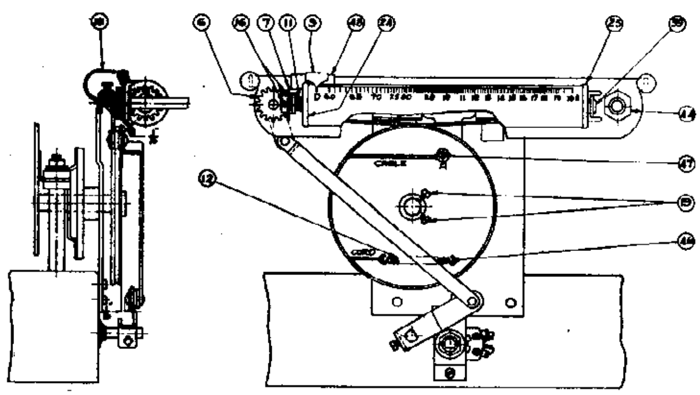

Fig. 5. Dial Mechanism

DIAL MECHANISM ADJUSTMENTS

The dial mechanism is rigidly mounted to the chassis. The tuning condenser is mounted by means of rubber cushions and bushings at points of support. The dial pointer, station selector knob, and tuning condenser drive drum are interconnected by means of the drive cord and drive cable; the frequency band switch, the cylindrical dial scale and switch knob, by gear and toggle assemblies.

1. Position of Drum on Condenser Shaft

With set screws (19) loosened and tuning condenser plates fully engaged, place the drum in the position as shown in Fig. 5 so that drum spring (12) is approximately horizontal, and the top rim of the drum is $\frac{1}{16}$ in. away from the mounting plate. Guide (48) should stop at equal distances from each end of the mounting plate slot.

2. Removing and Replacing Scale

Pry out fastener (39), and remove the scale by lowering that end below the ear and taking the scale out of cap assembly (24), holding parts (24), (11), and (7) in place. Replace, locating tabs of caps (24) and (25) in slots of scale. Replace fastener (39).

3. Locating Scale

Loosen the two gear set screws (16). Rotate the scale upward until there is slight tension on spring (11) with the pointer indicating on the Band "D" scale. With the frequency band switch in the Band "D" position, place gear (7) in mesh with the gear on part (6) and tighten the two set screws (16)

4. Replacing Drive Cord

The position of the dial scale pointer with respect to the tuning condenser drum is held fixed by means of a special metal braid cable connecting the drum with the guide (48). Tension is maintained on the cable through the drum spring (12) and drive cord. To replace either the drive cable or the drive cord, remove the dial scale for convenient access to guide (48). Unhook spring (12) from tab (46) to release tension. Unhook the cable or cord from guide (48) and unwind from the pulleys and drum. To replace the cable, rethread to agree with Fig. 5 and rehook drum spring (12) as shown.

5. Replacing Reduction Drive

To replace the reduction drive, unhook spring (12), loosening the drive cord. Unscrew palnut (44) and remove drive. Replace with new drive and rehook drive cord.

6. Replacing Toggle Assembly

Loosen the two set screws holding the toggle mechanism on the band change switch and on shaft (6). Replace with new assembly, setting lower lever arm $\frac{1}{16}$ in. away from the condenser drive drum as shown in Fig. 5 and tighten set screw on frequency band switch shaft. Rotate shaft (6) clockwise until there is slight tension on spring (11) with the scale in the Band "D" position. Place upper lever arm in shaft and tighten set screw.

7. Setting Scale Pointer

The scale pointer is soldered to the slider. To set the pointer mechanically, turn the tuning condenser rotor so that the plates are fully engaged, and solder the pointer to indicate the extreme left-hand line on the Band "D" scale as shown in Fig. 5.

8. Replacing Dial Lamp

Take hold of terminals of lamp bracket and push up until lamps protrude above the opening in reflector (18). Lamps may then be replaced in socket clips. After replacing lamps, slide the socket mounting bracket back into the mounting clip.

©John F. Rider, Publisher

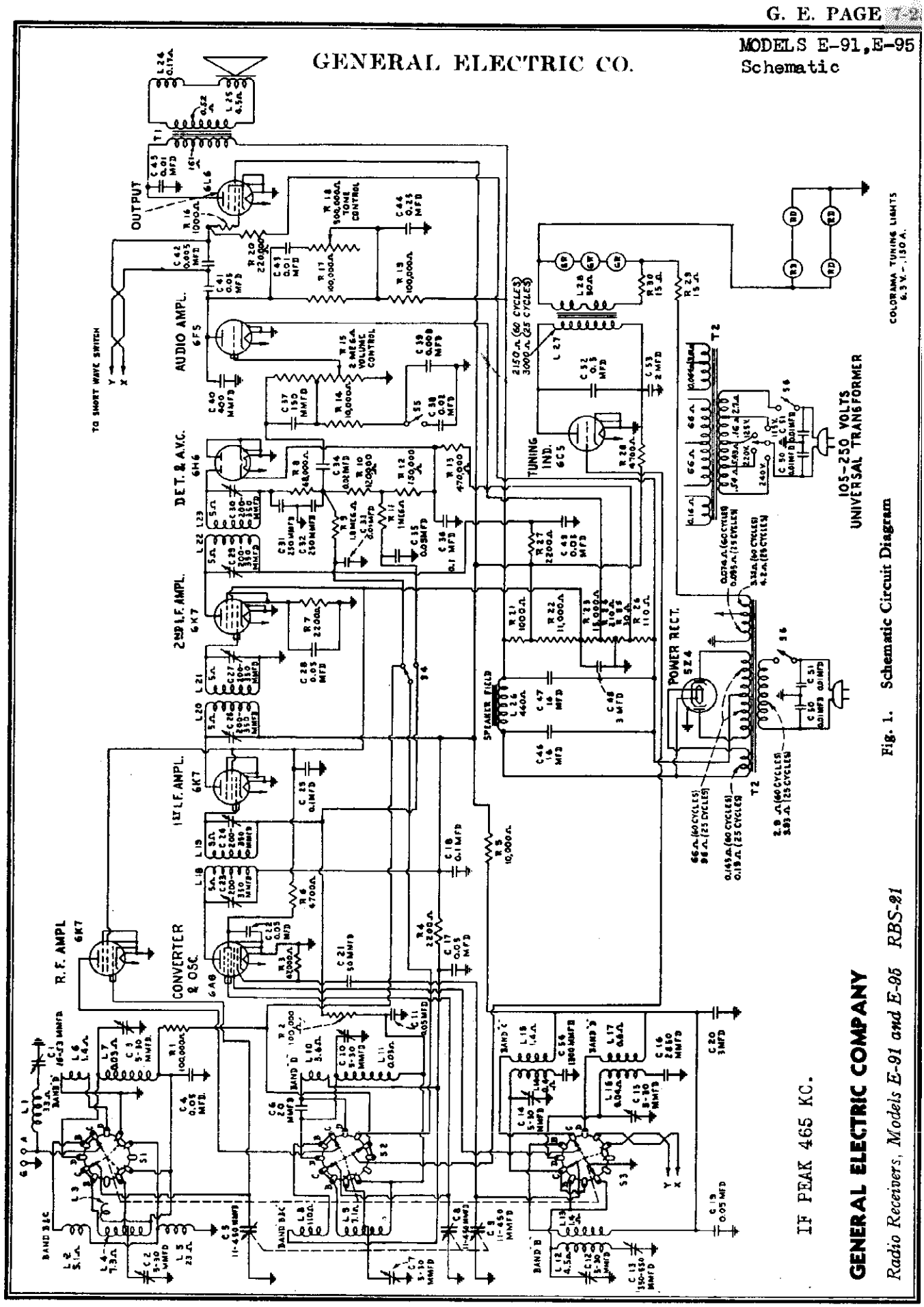

Fig. 1. Schematic Circuit Diagram

©John F. Rider, Publisher

MODELS E-91,E-95
Chassis Wiring
Coil Data

GENERAL ELECTRIC CO.

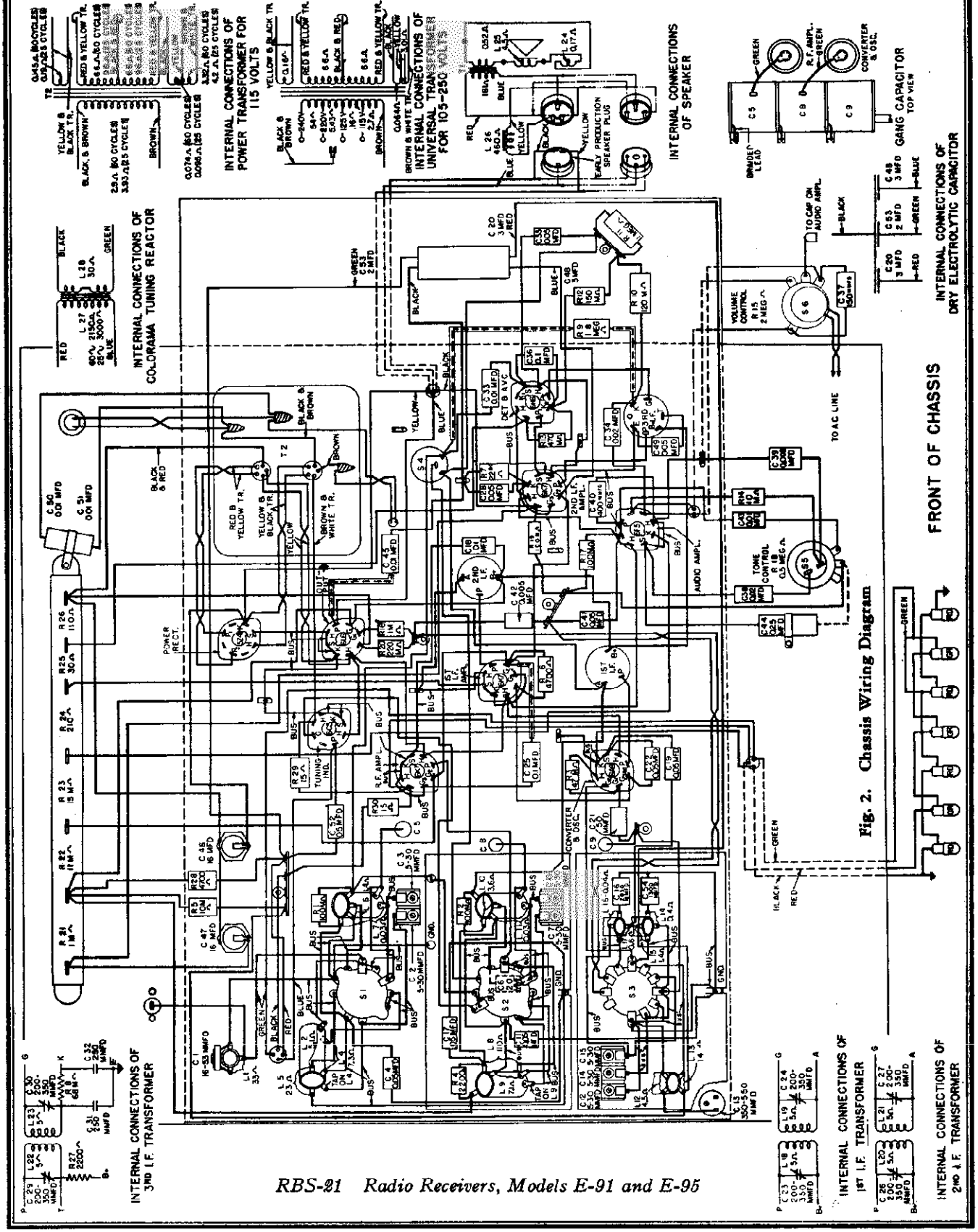

Fig. 2. Chassis Wiring Diagram

©John F. Rider, Publisher

©John F. Rider, Publisher

ALL-WAVE RECEIVERS

SUPERHETERODYNE

MODELS E-91 AND E-95

SERVICE DATA

Physical Specifications

Model	E-91	E-95
Height	20½ in.	39½ in.
Width	16⅝ in.	35⅝ in.
Depth	11⅛ in.	12½ in.
Weight packed	42 lb	57 lb

Electrical Specifications

Rating Label	Power Supply (Volts)	Frequency (Cycles)	Power Consumption (Watts)
A	115	50-60	105
C	115	25-60	105
V	105-130 and 230-250	40-60	110

NOTE—Taps on universal transformers (Rating "V") are accessible by removing the cap cover on the top of the transformer.

Tuning Frequency Range

Band "B".....540-1680 KC
Band "C".....1680-6000 KC
Band "D".....6.0-18.0 MC (6,000-18,000 KC)

Tuning Control Drive Ratio

Fast Tuning.....5 to 1
Vernier Tuning.....40 to 1

Electrical Power Output

Undistorted.....6.5 watts
Maximum.....14.0 watts

Loud-speaker—Electrodynamic

Cone: Model E-91.....8 in.
Model E-95.....12 in.
Cone Coil Impedance.....5.5 ohms at 400 cycles

Tubes

R. F. Amplifier....6K7 Triple-grid Super-control Amplifier
Converter and Oscillator.....6A8 Pentagrid Converter
1st I. F. Amplifier..6K7 Triple-grid Super-control Amplifier
2nd I. F. Amplifier.6K7 Triple-grid Super-control Amplifier
Detector and AVC.6H6 Twin Diode
Audio Amplifier...6F5 High Gain Triode
Output.....6L5 Beam Amplifier Tetrode
Colorama Control..6C5 Low Gain Triode
Rectifier.....5Z4 Full-wave Rectifier
Dial Lamps.....6.3 V—0.15 A. (4 red and 3 green)

DESCRIPTION OF ELECTRICAL CIRCUIT

Models E-91 and E-95 employ nine metal envelope tubes in a superheterodyne circuit, giving the excellent sensitivity and selectivity inherent in this type circuit. The radio frequency section of this nine-tube chassis utilizes a novel type of construction known as the "Junior Sentry Box." This construction permits the use of extremely short connecting leads and isolates each radio frequency circuit in its own particular shielded section. Separate groups of coils are used for each band in the oscillator section. The antenna and R. F. sections are composed of two coils, a separate coil for the "D" band and a composite coil for the "B" band and "C" band. Operation on the "C" band is obtained by shorting out a section of the antenna and R. F. "B" band coils.

The signal from the antenna is applied to the control grid of the 6K7 R. F. amplifier tube through the antenna coil, the secondary of which is tuned to the incoming signal by the rear section of the main tuning condenser. The antenna coil, for bands "B" and "C," contains two primary coils both connected for operation on the "B" band; however, when the band switch is turned to the "C" band position, the lower primary coil, L-8, is shorted out. The high frequency trimming adjustment for the "B" band antenna and R. F. stage is accomplished by two adjustable trimmers connected from the "C" band tap on each coil to ground. The capacity coupling coil L-3 acts only on the "C" band and its function is similar to that of a fixed antenna stage trimmer for that band.

The amplified radio frequency signal is impressed upon the control grid of the 6A8 converter tube through the R. F. coil, the secondary of which is tuned to the signal frequency by the rear section of the main tuning condenser. In the 6A8 tube, the incoming signal is combined with the local oscillator signal which is 465 KC different in frequency. The local signal is generated by the oscillator elements of this tube and the proper frequency difference is maintained throughout the tuning range by the front section of the main tuning condenser in conjunction with the oscillator coils and padding capacitors.

The combination of the signal frequency with the local oscillator frequency in the 6A8 converter tube produces the intermediate frequency of 465 kilocycles. This particular intermediate frequency is chosen to reduce image response and improve short-wave performance.

The intermediate frequency amplifier consists of a two-stage cascade section composed of three I. F. transformers and two 6K7 amplifier tubes. Each I. F. transformer has two tuned circuits. Initial bias for the 6K7 R. F. amplifier, the 6A8 converter, and the 6K7 first I. F. amplifier is supplied by returning the diode rectifier load resistor to a negative voltage supply of approximately 2 volts on the main bleeder resistor. The second I. F. amplifier 6K7 tube operates on self bias for all bands. This enables the second I. F. tube to provide maximum power to the 6H6 diode rectifier.

The output of the I. F. amplifier is applied to one plate of the 6H6 diode rectifier, which is a combined second detector and automatic volume control tube. The direct current component of the rectified signal, through one diode of this tube, produces a voltage drop across resistors R-10 and R-12. This voltage drop provides automatic bias for the R. F. amplifier, converter and the first I. F. amplifier, and thus gives automatic volume control action. Full automatic bias voltage is applied to the R. F. amplifier tube, while a portion of this voltage, from the junction of resistors R-10 and R-12, is applied to the converter and 1st I. F. amplifier which handle a somewhat larger signal voltage than the R. F. amplifier.

This same automatic bias voltage is used to control the Colorama tuning tube. Switch S-6 makes it possible to apply either full or partial voltage to the tube, thereby allowing control of the color indication in accordance with prevailing receiving conditions. A complete description of Colorama tuning is given in a later paragraph.

The audio frequency present across R-10 and R-12 is impressed upon the volume control R-15 through capacitor C-34. The movable arm on the volume control selects the amount of audio signal applied to the control grid of the 6F5 audio amplifier tube and thus regulates the output of the receiver. Across the volume control R-15 is placed a compensating network of capacitors and a resistor. The music-speech switch is found in this circuit, and when closed places capacitor C-36 in shunt with C-39, which removes the bass compensation. The output of the 6F5 audio tube is resistance coupled to the grid of the 6L6 beam power tetrode. The plate circuit of the 6L6 is suitably matched to the electrodynamic loud-speaker by means of a step-down output transformer.

The tone control is found in the plate circuit of the 6F5 first audio tube and consists of capacitor C-43 in series with a variable resistor R-18 across the 6F5 plate resistor R-17. Cutting out resistance in R-18 lessens the treble response of the receiver. Between the plate of the 6F5 first audio tube and the grid of the 6L5 tetrode output tube are found two capacitors in series, C-41 and C-42. The smaller capacitor, C-42, is shorted out by the wave band switch for operation on the broadcast band. On the two short-wave bands it is left in the circuit to attenuate the low frequency response and thereby lessen the tendency toward microphonic howl.

Plate and grid voltages for all tubes are supplied by the power supply system employing a 5Z4 full-wave rectifier tube which, together with a suitable network of resistors and capacitors, supplies the required voltages and filtering action.

COLORAMA TUNING

These receivers are equipped with Color Tuning, a novel method which indicates approach to resonance by means of a change of color of the light illuminating the tuning scale.

The colored light is produced by a group of four red-stained pilot bulbs and a group of three green stained bulbs behind the scale. At zero signal strength the red group is at full brilliance and the green invisibly dim. As the signal increases from zero, the red gets dimmer and the green brighter over a broad range until at extreme signal strength the green is fully bright and the red below visibility through the dial. Hence, as a station is tuned-in the color changes smoothly, and the maximum change in the green direction is an indication of resonance.

Weak stations will produce a small color change and strong stations a larger change. The difference in signal strength, between the weakest and the strongest station likely to be listened to, has been found to be so great in different localities that the receivers have been equipped with a two-position sensitivity range switch for "sensitive" and "insensitive" settings of the color tuning. This switch is located near the power transformer on the chassis and may be reached from the rear of the cabinet. In the sensitive position, the weakest station to which the user can listen comfortably, above the general noise level, will shift the color to neutral white at resonance. Stronger stations give resonant points at bright greens. In localities near a relatively large group of high-powered stations and having a high noise level, such as Chicago and New York, the range switch must be thrown to the insensitive position when standard outdoor antennas are used, or else the color will be fixed green over so wide a band that resonance cannot be accurately found. The difference in sensitivity is about twenty to one. On short wave bands the band switch connects the color tuning to the sensitive setting and the switch on the chassis is inoperative. This is because practically all the short-wave signals are relatively weak. The insensitive setting is used only on the 540-1680 KC band.

There is a group of four red and a group of three green pilot bulbs behind the scale. These are controlled by a Saturable Reactor in a circuit which is shown in the schematic diagram, Fig. 1. The saturable reactor is controlled by a D. C. coil which decreases its reactance smoothly from a high-value at no D. C. to a very low value at maximum D. C. The saturable reactor acts very much like a dimming rheostat except that it is controlled by the D. C. plate current of a 6C5 tube used solely for that purpose. This tube receives for its bias a portion of the A.V.C. voltage of the set so that at no signal the bias is nearly zero. At this point, the plate current is at maximum; therefore, the red is brightest and the green is invisibly dim.

SOME THINGS WHICH MAY AFFECT THE OPERATION OF COLOR TUNING ARE AS FOLLOWS:

Seven colored bulbs are used to give good diffusion of color over the scale; but if one of the seven fails it unbalances the whole group and should be replaced immediately. The lamp socket assembly may be removed by reaching into the rear of the cabinet, pulling the lamp socket assembly up on its guides and drawing it partly out. A shipping screw, which should be removed when the set is unpacked, may need to be removed the first time. There is enough slack in connecting wires to allow the assembly to be drawn forward. When the socket assembly has been drawn far enough out for unscrewing the bulbs turn on the power switch and replace the bulbs which do not glow. All will not be bad as each group is in series (green) or series parallel (red). Take care the wires do not foul the tuning mechanism when the assembly is replaced. The colored lamps used for replacement *MUST ALL BE 6.3 VOLTS, 0.15 AMPERE LAMPS.* No other size will work.

If the red is unusually dim on no signal and the colored bulbs are all good, try removing the antenna. Next try replacing the 6C5 Colorama tube or replace the rectifier. Sometimes the antenna noise level is so high that it dims the red like a signal. If the tubes in the set become weak, or the set is out of alignment, or for any other reason loses its sensitivity, the color tuning will appear insensitive.

ALIGNMENT PROCEDURE

The receiver should first be allowed to run for fifteen minutes in order to reach its approximate normal operating temperature. Before making any adjustments, it is wise to determine the correctness of the existing alignment. This may be done by supplying a signal from the test oscillator to the receiver and inserting a "Tuning Wand" into the coil involved. The "Tuning Wand" consists of a rod of insulating material having a ring of nonmagnetic metal attached to one end, and a small core of finely divided iron compacted into the opposite end. By inserting the metal ring end into the center of a particular coil, the inductance of the coil is lowered, increasing its resonant frequency. Inserting the iron-filled rod into the coil raises its inductance, lowering its resonant frequency. If the circuits are in exact alignment, inserting either end of the tuning wand in any coil will result in a decrease in output. When an increase in signal is obtained with the iron-filled end of the wand, a decrease in resonant frequency of that circuit by increasing its trimmer capacity is indicated. When an increase in signal is obtained with the metal ring, a decrease in trimmer capacity is indicated.

Changes Indicated by Wand

Wand	Signal	Trimmer adjustment required
Metal Ring	Decrease	None
Iron filings	Decrease	
Metal Ring	Increase	Decrease capacity
Iron filings	Decrease	
Metal Ring	Decrease	Increase capacity
Iron filings	Increase	

Alignment Frequencies

I. F.	Band "B"	Band "C"	Band "D"	Wave Trap
465 kc	580 kc 1500 kc	5220 kc	18,000 kc	465 kc

In order to align this receiver properly, it is necessary to have available the following test equipment:

1. A modulated test oscillator with frequencies available of 465, 580, 1500, 5520 and 18,000 Kc.
2. An output indicator, such as a high resistance a-c voltmeter with a maximum scale reading of 3 to 5 volts, or a neon lamp indicator.
3. An alignment tool consisting of an insulating shaft with a small screwdriver blade.
4. A tuning wand.

The location of all trimmer capacitors, as well as socket voltages to chassis, is shown in Fig. 3.

1. I. F. Alignment

Set the frequency band switch of the receiver to Band "D", short circuit the antenna and ground terminals and tune the receiver to some point near maximum tuning condenser capacity where no signal is heard. Set the volume control at its maximum position and ground the chassis.

The I. F. amplifier is tuned to 465 Kc; set the test oscillator so as to produce a signal at this frequency. Connect the test oscillator output between the top grid terminal of the 6K7 2nd I. F. tube and the chassis using a .05 mfd. Capacitor (RC-072) in series with the oscillator output lead to the top grid connection, after first removing the grid lead connecting to the same point from the 2nd I. F. transformer. Provide a path for grid bias by connecting a 10,000 ohm resistor (RQ-083) between grid cap and top grid terminal of tube.

Connect the output meter across the voice coil of the speaker and adjust the test oscillator output control so that, with the receiver volume control at maximum, a small deflection is observed on the output meter. During both I. F. and R.F. alignment, the test oscillator signal should be maintained at the lowest level that will give a good readable output indication.

Adjust the secondary trimmer of the third I. F. transformer until a maximum output reading is obtained. Maintain a small deflection on the output meter throughout alignment by adjusting the test oscillator output. Next, adjust the primary trimmer of the third I. F. transformer for maximum output. This transformer is then adjusted and should not require readjustment when aligning transformers ahead of it.

Transfer the test oscillator connections to the top grid terminal of the 6K7 1st I. F. tube, replace the grid lead on 2nd I. F. tube, and reduce the output of the test oscillator as low as possible consistent with obtaining an easily readable indication on the output meter. Adjust secondary and primary trimmers respectively on the 2nd I. F. transformer until a maximum deflection on the output meter is obtained.

Transfer the test oscillator connections to the top grid terminal of the 6A8 converter tube and replace the grid cap connection on the 6K7 1st I. F. tube. It will probably be found desirable to set the tone control for minimum high response, and to reduce the volume control setting, to lessen the noise reproduced due to the extremely high sensitivity of the receiver. Again adjust the test oscillator output to as low a value as will allow accurate adjustment. Adjust secondary and primary trimmers respectively on the 1st I. F. transformer until maximum deflection on the output meter is obtained.

The I. F. alignment is now complete.

2. I. F. Wave Trap Alignment

Set the band switch to Band "B" and tune the receiver to about 1000 Kc. With the test oscillator still set at 465 Kc., remove the shorting connections between antenna and ground terminals and apply this signal to the antenna terminal through a dummy antenna consisting of a 400 ohm resistor and 200 mmfd. capacitor in series. With the 465 Kc. signal applied to the antenna terminal, adjust the I. F. Wave Trap Trimmer for minimum output indication.

3. R. F. Alignment

First check the position of the dial pointer by rotating the tuning condenser to maximum capacity position, i.e., plates fully meshed. At this position, the pointer should coincide with the end mark at the left-hand end of the scale. If it does not, it may be set by loosening the dial drum set screws and rotating the drum on the tuning condenser shaft. Hold the tuning condenser rotor while doing this, to prevent its rotating. Tighten the two set screws after the pointer is correctly set.

Band "B" (540-1680 Kc.)

Set the test oscillator for operation at 1500 Kc. and connect its output to the antenna terminal of the receiver through the dummy antenna described under I. F. Wave Trap Alignment. Tune the receiver until the pointer is at 1500 on the scale. Set the tone control for minimum high response and reduce the volume control setting so as to avoid excessive noise response. Adjust the Band "B" oscillator, R. F., and antenna trimmers respectively (C-12, C-7 and C-2, Fig. 3) to give maximum deflection on the output meter. Maintain the test oscillator output at the lowest level which will give an easily readable output indication.

Now set the test oscillator to 580 Kc. and tune the receiver to resonance with this signal. Adjust the 580 Kc. padding capacitor, C-13, rocking the tuning condenser back and forth through resonance as the padding capacitor is adjusted and note the deflection of the tuning meter each time the receiver is tuned through resonance. Leave the padding capacitor at the setting which gives greatest deflection.

Retune the receiver to 1500 Kc. and reset the test oscillator for this frequency. Check the alignment by again adjusting the Band "B" oscillator, R. F. and antenna trimmers for maximum deflection on the tuning meter.

Band "C" (1680-6000 Kc.)

No trimmers are provided for alignment of the R. F. and antenna transformers in Band "C" of these receivers. Correct tracking between R. F. and antenna transformers is obtained by the action of the capacity coil, L-3, and between oscillator and the other tuned circuits by means of the adjustable oscillator trimmer C-14 and the Band padding capacitor, C-34.

Turn the band switch to Band "C". Set the test oscillator at 5220 Kc. and tune the receiver to resonance at this frequency. Adjust the Band "C" oscillator trimmer, C-14, for maximum output indication on the tuning meter, rocking the tuning condenser back and forth through resonance while making the adjustment.

Band "D" (6.0-18.0 Mc.)

Turn the band switch to Band "D". Set the test oscillator at 18,000 Kc. (18.0 Mc.) and tune the receiver until the pointer coincides with the 18.0 mark. Adjust the Band "D" oscillator trimmer, C-15, to give maximum output indication. It will probably be found that there will be two settings of the oscillator trimmer that will give an output response. The lower capacity setting of the trimmer is the one that should be used. To be sure that correct adjustment has been obtained, tune for the image signal at 17.07 Mc. with the test oscillator set at 18.0 Mc. It may be necessary to increase the test oscillator output to obtain response at this point.

Retune the receiver to 18.0 Mc. and adjust Band "D" antenna and R. F. trimmers, respectively (C-3 and C-10) for maximum output indication. When adjusting the R. F. trimmer, C-10, rock the tuning condenser back and forth through resonance as in the 580 Kc. padding capacitor adjustment.

Alignment of the receiver is now complete.

SOCKET VOLTAGES

Tube No.		Cathode to Ground Volts D.C.	Screen Grid to Ground Volts D.C.	Plate to Ground Volts D.C.	Cathode Current M.A.	Heater Volts A.C.
6K7 R. F. Amp.		†...	100	235	8.0	6.3
6A8	Oscillator	...	...	135	10.5	6.3
	Converter	†...	95	260		
6K7 1st I. F. Amp.		†...	100	260	8.0	6.3
6K7 2nd I. F. Amp.		7.0	100	240	8.1	6.3
6H6 Detector & AVC.		...	...	...	...	6.3
6F5 Audio Amplifier		1.5	...	*180	0.2	6.3
6L5 Output		**...	220	260	53.5	6.3
6C5 Colorama Control		...	...	180	9.5	6.3
5Z4 Power Rectifier		360 D.C.	...	670/335 R.M.S.	110.0	5.0

Measured at 115 volts supply. No signal input. Volume control maximum. Voltmeter 1000 ohms per volt; measurements taken on highest scale giving accurate readable deflection.
* Supply voltage minus drop in load resistor. ** Grid bias at source—10 volts.
† Grid bias at source—3.3 volts.

©John F. Rider, Publisher

Radio Receivers, Models E-91 and E-95 RBS-91

VISUAL ALIGNMENT OF I.F.

In order to realize to full advantage the performance built into these receivers at the factory, circuit alignment using cathode ray oscilloscope equipment is much to be preferred. The oscilloscopic method is particularly advantageous in aligning the I. F. tuned circuits.

For visual alignment it is necessary to vary the frequency of an unmodulated test oscillator signal over a range extending on both sides of the peak frequency. This variation must take place in *synchronism* with the horizontal traverse of the cathode ray beam on its screen. The frequency modulator must, therefore, provide means for synchronizing the periodic test frequency variation with the cathode ray horizontal deflection circuit. The test oscillator may advantageously have facilities for audio frequency amplitude modulation of a fixed radio frequency test signal, as well as for frequency modulation, but audio modulation is not required for visual I. F. alignment.

Instead of an output meter across the speaker voice coil, the vertical plates of the cathode ray tube are connected across the load resistor of the diode rectifier. With the frequency modulator in operation in conjunction with the test oscillator, the resonance curve of the circuit under test will be then shown on the screen.

Preliminary Procedure

For visual alignment, adjust the receiver controls and connect the test oscillator as outlined in the section entitled "I. F. Alignment" under "ALIGNMENT PROCEDURE." Connect the vertical deflecting plates of the cathode ray tube across the diode rectifier load resistor, which in these receivers consists of R-10 and R-12 in series. The location of these resistors is clearly shown in Fig. 3.

Place the oscilloscope in operation as an output indicator and proceed as outlined in the section entitled, "I. F. Alignment."

Alignment Adjustments

Adjust the oscilloscope so that the luminescent spot on the cathode ray screen traces a horizontal line across the screen. Now place the frequency modulator and test oscillator in operation to give an unmodulated radio frequency signal varying from one side to the other of 465 Kc. Adjust the oscilloscope and test oscillator controls to show a single overall resonance curve of the I. F. channel on the cathode ray tube screen. Do not change the test oscillator setting thereafter.

To align the I. F. transformers, follow in sequence the same procedure outlined in the sections under "ALIGNMENT PROCEDURE" describing this operation. Instead of aligning for maximum output on an output indicator, the object should be to make the curve symmetrical. If the sweep circuit is so arranged that two symmetrically reversed curves appear on the screen, the curves should be made to coincide by adjusting the I. F. trimmer capacitors.

Visual R. F. alignment may be carried out in the same general manner as shown by applying a suitable frequency-modulated signal between the antenna and ground terminals of the receiver and connecting the cathode ray vertical deflecting plates across the diode rectifier load resistors.

ADJUSTMENT OF DIAL MECHANISM

The dial mechanism (Fig. 4) is rigidly mounted to the chassis by means of two brackets and four self-tapping screws. The dial pointer is operated by means of an "automatic version" reduction drive unit, mounted on the gang condenser, and connected to the gang rotor by a set of anti-backlash gears. Motion imparted to the gang condenser rotor is transmitted through a series of pulleys and an interconnecting cable to the dial pointer slider which is supported on a rail above the dial scale.

To Mount Escutcheon

Care should be taken to use a well ground screw driver of proper size to fasten the screws in the escutcheon plate. Holes have been jigged in the cabinet front panel to insure the proper location of the escutcheon with respect to the scale housing.

To Replace Drive Cable

Remove the defective drive cable to be replaced. Rotate the drive wheel (14) counter-clockwise until the gang condenser plates are fully open. Place the end of the cable having an eyelet in slot [A]. Thread the cable as shown in Fig. 4, making certain that the cable passes *over* the pin [B] and runs along the *correct* grooves, the looped end hooking over the tension spring (15). Check the position of the drive wheel (14) on the condenser shaft to make sure that the cable coming off the right hand idler pulley lines up with the groove in the drive pulley. Also, as the condenser plates become fully meshed, the drive wheel (14) should just meet the bushing [D] of the reduction drive unit (39). With the drive wheel in this position, place the pointer on the rail [E] and, with the tip of the pointer (11) on the extreme left hand dial scale division, crimp the pointer tab on the drive cable.

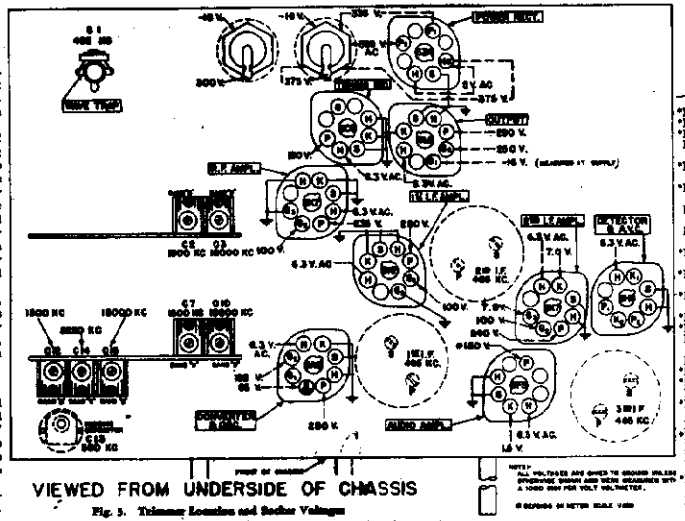

Fig. 3. Trimmer Location and Socket Voltages

To Adjust Pointer for Scale Calibration

These positions of the dial pointer cable are provided on the drive wheel (14) to adjust the dial pointer up or down scale. The position shown in Fig. 4 with the cable over pin [B] is the medium position. Changing the cable to the position between pins [B] and [C] moves the pointer down scale. The position below the pin [C] moves the pointer up scale from the medium position.

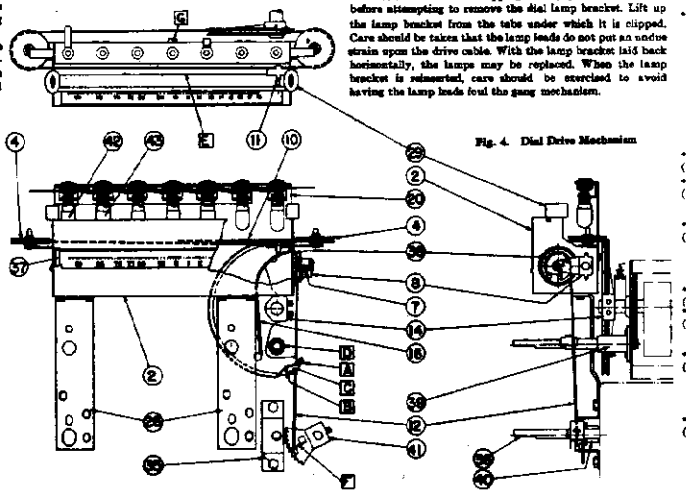

Fig. 4. Dial Drive Mechanism

To Replace Scale

Remove the band change cable (12) by unhooking it from the fork [F] on gear (41). Remove the end support bracket (8) held by a single self-tapping screw and withdraw the scale assembly from its housing. Replace the end caps (37) and (38) on the new scale and reassemble. Before reattaching the band change cable to the fork [F] the tension spring (7) should be given two full turns to provide proper tension for the cable.

To Adjust Rotation of Scale

The forked tab [F] may be bent up or down to give the correct position of the scale divisions with respect to the dial pointer. The pointer tip should slightly overlap the scale divisions.

To Change Dial Lamps

Make certain that the shipping screw [G] has been removed before attempting to remove the dial lamp bracket. Lift up the lamp bracket from the tabs under which it is clipped. Care should be taken that the lamp leads do not put an undue strain upon the drive cable. With the lamp bracket laid back horizontally, the lamps may be replaced. When the lamp bracket is reinserted, care should be exercised to avoid having the lamp leads foul the gang mechanism.

REPLACEMENT PARTS

PRICES SUBJECT TO CHANGE WITHOUT NOTICE

Stock No.	Description	List Price
*RB-008	BOARD—Terminal Board Double-ing	$0.10
*RB-009	BOARD—Terminal Board Single-ing	.10
*RB-026	BOARD—Antenna Ground Terminal	.10
RB-128	BRACKET—Gang Condenser Mounting Brackets	.15
*RC-034	CAPACITOR—.005 mfd., 200 V. Paper (C-42)	.25
*RC-034	CAPACITOR—.01 mfd., 200 V. Paper (C-33, C-35, C-43)	.25
RC-036	CAPACITOR—.008 mfd., 200 V. Paper (C-39)	.25
RC-042	CAPACITOR—.01 mfd., 1000 V. Paper (C-45)	.30
*RC-046	CAPACITOR—.02 mfd., 200 V. Paper (C-34, C-38)	.25
*RC-072	CAPACITOR—.05 mfd., 200 V. Paper (C-4, C-11, C-22, C-28, C-34)	.25
*RC-091	CAPACITOR—.05 mfd., 400 V. Paper (C-17, C-19, C-41, C-49)	.30
*RC-096	CAPACITOR—1 mfd., 200 V. Paper (C-25)	.50
*RC-123	CAPACITOR—1 mfd., 400 V. Paper (C-18)	.25
RC-182	CAPACITOR—.25 mfd., 400 V. Paper (C-44)	.40
RC-186	CAPACITOR—5 mfd., 100 V. Paper (C-52)	.45
*RC-205	CAPACITOR—20 mmfd. Mica (C-6)	.25
*RC-210	CAPACITOR—50 mmfd. Mica (C-21)	.25
RC-242	CAPACITOR—150 mmfd. Mica (C-37)	.25
*RC-258	CAPACITOR—250 mmfd. Mica (C-31, C-32)	.25
RC-291	CAPACITOR—400 mmfd. Mica (C-40)	.30
*RC-344	CAPACITOR—1300 mmfd. Mica (C-36)	.25
RC-360	CAPACITOR—2650 mmfd. Mica (C-16)	.50
RC-414	CAPACITOR—16 mfd., 350 V. Wet Electrolytic (C-46)	1.25
*RC-415	CAPACITOR—16 mfd., 300 V. Wet Electrolytic (C-47)	1.10
RC-562	CAPACITOR—3 mfd., 350 V.; 2 mfd., 350 V.; 150 V; Dry Electrolytic (C-30, C-48)	1.95
RC-519	CAPACITOR—Oscillator Padder Capacitor .035 mfd. (C-13)	.35
RC-520	CAPACITOR—Twin Trimmers; Ant. & R. F. Bands B & D (C-2, C-3, C-7, C-10)	.40
RC-531	CAPACITOR—Triple Trimmers; Oscillator Bands B, C & D (C-12, C-14, C-18)	.60
RC-711	CONDENSER—Gang Tuning Condenser (without trimmers, including drive) 11-450 mmf. (C-5, 8, 9)	4.75
RC-755	CAPACITOR—Line Capacitors .01-.01 mfd. 250 V AC, Paper (C-50, C-51)	.40
RC-816	CABLE—Speaker Cable (Complete)	.50
RC-850	CORD—Power Cord	.65
RC-992	CUSHION—Gang Condenser Mounting Cushion (Pkg. of 3)	.10
RE-011	ESCUTCHEON—Escutcheon Plate (with Mtg. Screws)	1.25
*RP-002	FOOT—Chassis Mounting Foot	.20
*RQ-001	GRID CAP—Control Grid Clip, (Pkg. of 5)	.20
RG-131	GASKET—Escutcheon Felt Gasket	.10
RG-102	GASKET—Escutcheon Rubber Gasket	.10
*RK-004	KNOB—Control Knob (Push-on) (Pkg. of 5)	.75
RL-017	COIL—Antenna Coil Band B & C (L-3, L-8, L-4, L-5)	1.15
RL-018	COIL—Antenna Coil Band D(L-9, L-7)	.75
RL-123	COIL—R.F. Coil Band B & C (L-8, L-9)	1.10
RL-124	COIL—R.F. Coil Band D (L-10, L-11)	.75
RL-225	COIL—Oscillator Coil Band B (L-12, L-13)	.85
RL-226	COIL—Oscillator Coil Band C (L-14, L-15)	.85
RL-227	COIL—Oscillator Coil Band D (L-16, L-17)	.85
RL-310	REACTOR—"Colorama Tuning" Saturable Reactor 50 Cycles (L-27, L-28)	3.00
RL-311	REACTOR—"Colorama Tuning" Saturable Reactor 25-50 Cycles (L-27, L-28)	3.00
*RQ-059 (RR-014)	RESISTOR—1000 ohm, ½ Watt Carbon (R-16) (Pkg. of (5)	.70
*RQ-067 (RR-013)	RESISTOR—2000 ohm, ½ Watt Carbon (R-4, R-7, R-27) (Pkg. of 5)	$0.60
RQ-075	RESISTOR—4700 ohm, ½ Watt Carbon (R-6) (Pkg. of 5)	.60
*RQ-083 (RR-021)	RESISTOR—10,000 ohm ½ Watt Carbon (R-14) (Pkg. of 5)	.60
RQ-099	RESISTOR—47,000 ohm, ½ Watt Carbon (R-3, R-13) (Pkg. of 5)	.60
RQ-103	RESISTOR—68,000 ohm, ½ Watt Carbon (R-8) (Pkg. of 5)	.60
*RQ-107 (RR-060)	RESISTOR—100,000 ohm, ½ Watt Carbon (R-1, R-2, R-10, R-17, R-19) (Pkg. of 5)	.70
*RQ-111 (RR-064)	RESISTOR—150,000 ohm ½ Watt Carbon (R-12) (Pkg. of 5)	.75
RQ-115	RESISTOR—220,000 ohm, ½ Watt Carbon (R-20) (Pkg. of 5)	.75
*RQ-131 (RR-067)	RESISTOR—1 Meg., ½ Watt Carbon (R-11) (Pkg. of 5)	.75
RQ-137	RESISTOR—1.8 Meg., ½ Watt Carbon (R-9) (Pkg. of 5)	.75
RQ-275	RESISTOR—4700 ohm, ½ Watt Carbon (R-26) (Pkg. of 5)	.75
*RQ-283 (RR-183)	RESISTOR—10,000 ohm, ½ Watt Carbon (R-5) (Pkg. of 5)	.75
RR-330	RESISTOR—15 ohm, 2 Watt, Flexible (R-29) (Pkg. of 5)	.85
RR-331	RESISTOR—15 ohm, 1 Watt, Flexible (R-30) (Pkg. of 5)	.75
RR-738	RESISTOR—Candohm Tapped Bleeder Resistor (R-21, 22, 23, 24, 25, 26)	1.00
RS-135	SHIELD—1st & 2nd I. F. Coil Shield Can	.30
RS-147	SHIELD—3rd I. F. Coil Shield Can	.20
*RS-200	SOCKET—6 Pin Tube Socket (Pkg. of 5)	.75
RS-204	SOCKET—5 Pin Tube Socket (Pkg. of 5)	.75
RS-324	SWITCH—Band Change Switch (S-1, S-2, S-3)	2.75
RS-325	SWITCH—"Colorama" Sensitivity Switch	.60
RS-423	SPRING—Knob Spring, "Push-on" type, (Pkg. of 10)	.25
RT-089	TRANSFORMER—Universal Power Transformer 105/120 200/250 V 40/60 Cycles (T-3)	10.25
RT-091	TRANSFORMER—Power Transformer 115 V 50/60 Cycles (T-2)	6.95
RT-092	TRANSFORMER—Power Transformer 115 V 25/50 Cycles (T-2)	10.95
RT-223	TRANSFORMER—1st & 2nd I.F. Transformer (Complete) (L-18, L-19, C-28, C-24) (L-20, L-21, C-26, C-27)	1.80
RT-224	TRANSFORMER—3rd I.F. Transformer (Complete) (L-22, L-23, C-29, C-30)	1.75
RT-710	TONE CONTROL—Tone Control and Speech Clarifier Switch (R-18, S-5)	1.00
RV-015	VOLUME CONTROL—Volume Control and Power Switch (R-15, S-4)	1.35
RW-006	WINDOW—Escutcheon Window	.50
RW-401	WAVE TRAP—Wave Trap Coil Assembly (Complete) (L-1, C-1)	.90

8" SPEAKER ASSEMBLY E-91

RC-909	CONE—8-in. Type Cone and Voice Coil (Gasket Included)	$1.15
RC-990	CLAMP—8-in. Cone Spider Clamp and Screw	.05
*RP-012	PLUG—Female Speaker Plug	.20
RP-044	PLUG—Male Speaker Plug	.20
RP-052	PLUG—Female Speaker Plug (Late Prod.)	.20
RP-053	PLUG—Male Speaker Plug (Late Prod.)	.20
RS-034	SPEAKER—8-in. Type Speaker (Complete with Output Transformer) (L-24, L-25, T-1)	8.00
RS-416	SPRING—Voice Coil Leads Spring (Pkg. of 2)	.10
RT-418	TRANSFORMER—Output Transformer (T-1)	1.75

12" SPEAKER ASSEMBLY E-95

RC-910	CONE—12-in. Type Cone and Voice Coil (Gasket Incl.)	$01.45
RC-991	CLAMP—12-in. Cone Spider Clamp and Screw	.05
*RP-012	PLUG—Female Speaker Plug	.20
RP-044	PLUG—Male Speaker Plug	.20
RP-052	PLUG—Female Speaker Plug (Late Prod.)	.20
RP-053	PLUG—Male Speaker Plug (Late Prod.)	.20
RS-035	SPEAKER—12-in. Type Speaker (Complete with Output Transformer) (L-26, L-28, L-26, T-1)	10.50
RS-416	SPRING—Voice Coil Leads Spring (Pkg. of 2)	.10
RT-415	TRANSFORMER—Output Transformer T-1	1.75

DIAL MECHANISM

RB-126	BRACKET—Band Switch Operating Shaft Bracket (35)	$0.10
RB-127	BRACKET—Dial Mask and Reflector Box Support Bracket (36)	.20
RB-140	BRACKET—Dial Lamp Bracket (30)	1.10
RB-511	BOX—Dial Mask and Reflector Box (3)	.50
RC-817	CABLE—Drive Cable (Pkg. of 5) (10)	.40
RC-818	CABLE—Band Change Cable (Pkg. of 5) (12)	$0.40
RC-993	CUSHION—Rubber Buffer Cushion (Dial) (Pkg. of 2) (29)	.10
RC-994	CAP—Scale Cap (Free End) (37)	.10
RC-995	CAP—Scale Cap (Pulley End) (38)	.10
RD-036	DRIVE—Tuning Condenser Reduction Drive (39)	1.10
RD-037	DIAL—"Slide Rule" Dial Scale	.65
RG-006	GEAR—Band Switch Drive Gear (40)	.15
RG-007	GEAR—Band Switch and Dial Operating Gear (41)	.20
RL-008	LAMP—"Colorama Tuning" Green Lamp (Pkg. of 10) (43)	1.50
RL-009	LAMP—"Colorama Tuning" Red Lamp (Pkg. of 10) (43)	1.50
RP-045	POINTER—Dial Pointer, (Pkg. of 5) (11)	.25
RP-048	PULLEY—Gang Drive Pulley (14)	.35
RP-049	PULLEY—Drive Cord Idler Pulley (14)	.15
RS-432	SPRING—Dial Scale Spring (7)	.05
RS-433	SPRING—Gang Drive Pulley Spring (15)	.05
RS-435	SUPPORT—Dial Scale Spring Support (8)	.10
RS-997	SHAFT—Band Switch Drive Gear Shaft (36)	.15

*Indicates part also used on 1936 "A" line receivers. E-96

GENERAL ELECTRIC CO.

MODELS E-101, E-105
E-106
Schematic

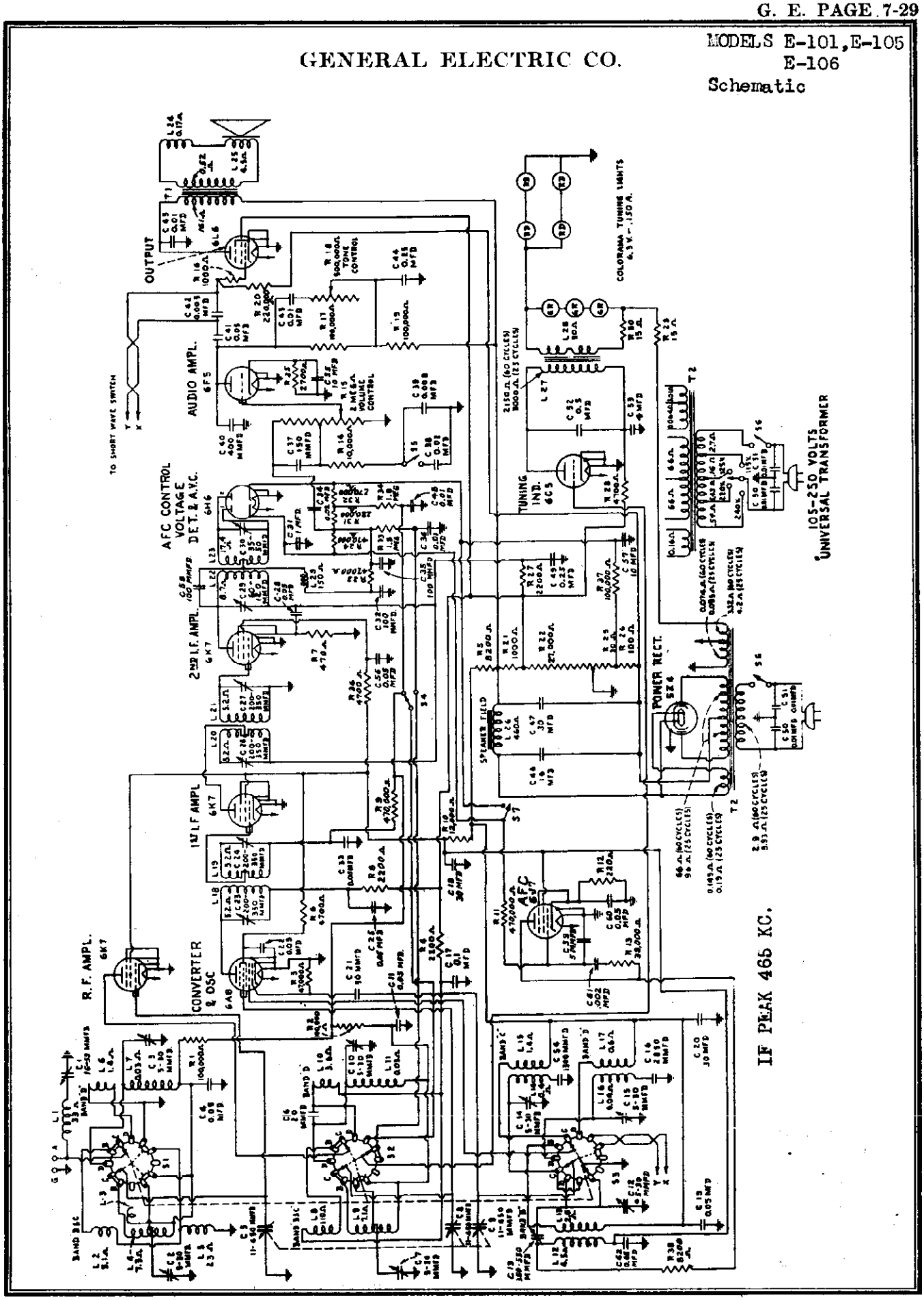

©John F. Rider, Publisher

MODELS E-101, E-105
E-106

GENERAL ELECTRIC CO.

Chassis Wiring
Coil Data

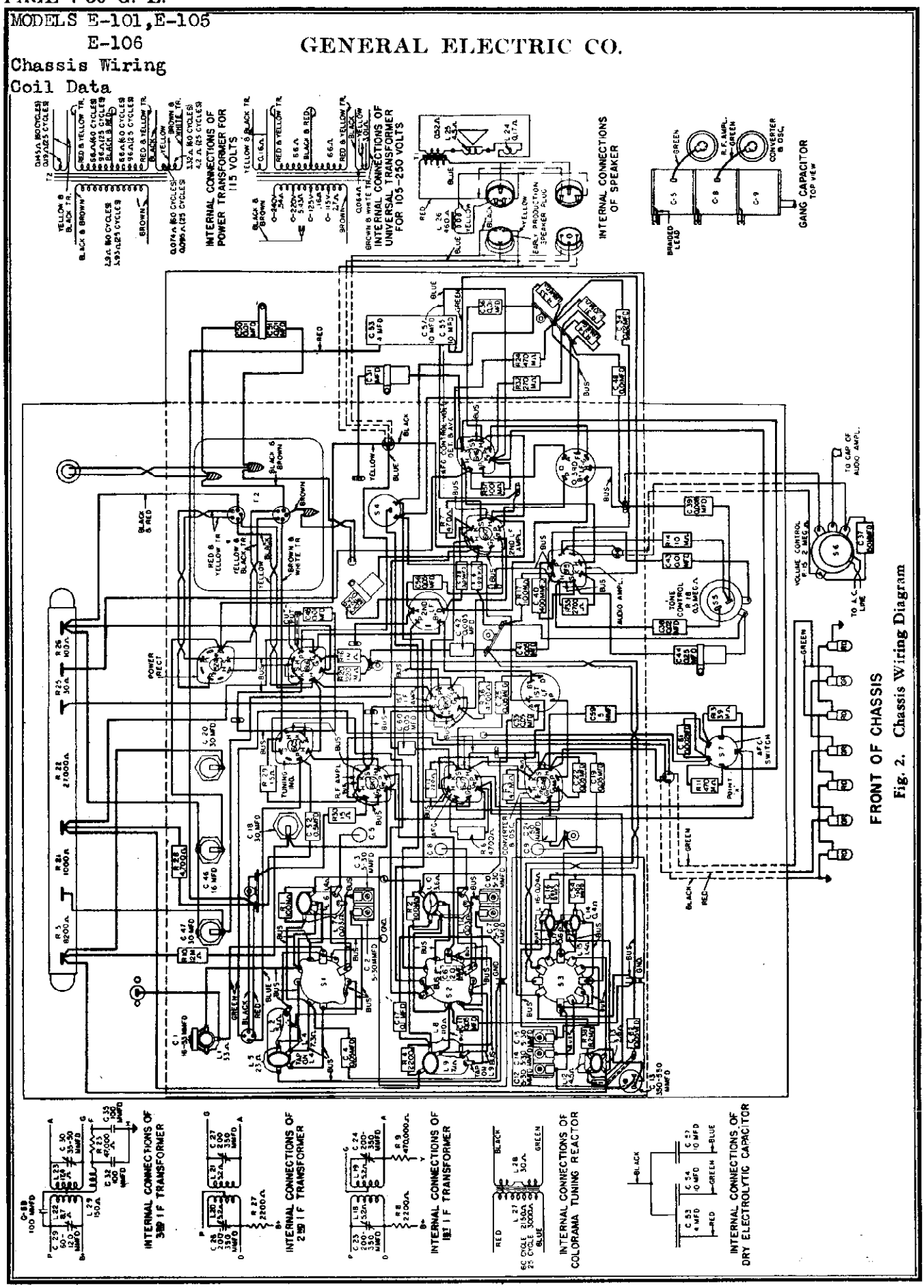

Fig. 2. Chassis Wiring Diagram

©John F. Rider, Publisher

GENERAL ELECTRIC CO.

MODELS E-101, E-105 E-106
Circuit Data
Alignment, Dial Data
Visual Alignment

SERVICE DATA

Physical Specifications

Model	E-101	E-105	E-106
Height	20¼ in.	40 in.	42⅝ in.
Width	13⅝ in.	25 in.	27⅛ in.
Depth	9⅛ in.	11⅛ in.	14⅛ in.
Weight packed	46 lbs.	72 lbs.	80 lbs.

Electrical Specifications

Rating Label	Power Supply (Volts)	Frequency (Cycles)	Power Consumption (Watts)
A	115	50-60	110
C	115	25-60	110
V	105-130 and 200-250	40-60	115

NOTE—Taps on *universal transformers* (Rating "V") are accessible by removing the cap cover on the top of the transformer.

Tuning Frequency Range

Band "B"	540-1680 kc.
Band "C"	1680-6000 kc.
Band "D"	6.0-18.0 mc. (6,000-18,000 kc.)

Tuning Control Drive Ratio

Fast Tuning	8 to 1
Vernier Tuning	40 to 1

Electrical Power Output

Undistorted	6.5 watts
Maximum	14.0 watts

Loud-speaker—Electrodynamic

Cone: Model E-101 . . . . 8-inch
Model E-105 . . . . 12-inch
Model E-106 . . . . 12-inch
Cone Coil Impedance at 400 cycles . . . . . 5.5 ohms

Tubes

R. F. Amplifier . . . . 6K7 Triple-grid Super-control Amplifier
Converter and Oscillator . . . . 6A8 Pentagrid Converter
First I. F. Amplifier . . . . 6K7 Triple-grid Super-control Amplifier
Second I. F. Amplifier . . . . 6K7 Triple-grid Super-control Amplifier
Detector AVC and AFC Bias Supply . . 6H6 Twin Diode
Audio Amplifier . . . . 6F5 High Gain Triode
Output . . . . 6L6 Beam Power Amplifier Tetrode
Colorama Control . . 6C5 Low Gain Triode
AFC Control . . . . 6J7 Triple-grid Amplifier
Rectifier . . . . 83A Full-wave Rectifier
Dial Lamps . . . . 8.3 V.-0.15 A. (4 red and 3 green)

DESCRIPTION OF ELECTRICAL CIRCUIT

Models E-101, E-105 and E-106 employ ten metal envelope tubes in a superheterodyne circuit, giving the excellent sensitivity and selectivity inherent in this type circuit. The radio frequency section of this ten-tube chassis utilizes a novel type of construction known as the "Junior Sentry Box." This type construction permits using extremely short connecting leads and isolates each radio frequency circuit in its own particular shielded section. Separate groups of coils are used for each band in the oscillator section. The antenna and R. F. sections are composed of two coils, a separate coil for the "D" band and a composite coil for the "B" band and "C" band. Operation on the "C" band is obtained by shorting out a section of the antenna and R. F. "B" band coil.

The signal from the antenna is applied to the control grid of the 6K7 R. F. amplifier tube through the antenna coil, the secondary of which is tuned to the incoming signal by the rear section of the main tuning condenser. The antenna coil, for bands "B" and "C," contains two primary coils connected for operation on the "B" band; however, when the band switch is turned to the "C" band position, the lower primary coil, L-5, is shorted out. The high frequency trimming adjustment for the "B" band antenna and R. F. stage is accomplished by two adjustable trimmers connected from the "C" band tap on each coil to ground. The capacity coupling coil, L-3, acts only on the "C" band and its function is similar to that of a fixed antenna stage trimmer for that band.

The amplified radio frequency signal is impressed upon the signal control grid of the 6A8 converter tube through the R. F. Coil, its secondary of which is tuned to the signal frequency by the center section of the main tuning condenser. In the 6A8 tube, the incoming signal is combined with the local oscillator signal which is 465 kc. different in frequency. The local signal is generated by the oscillator elements of this tube and the proper frequency difference is maintained throughout the tuning range by the front section of the main tuning condenser in conjunction with the oscillator coils and padding capacitors.

The combination of the signal frequency with the local oscillator frequency in the 6A8 converter tube produces the intermediate frequency of 465 kilocycles. This particular intermediate frequency is chosen to reduce image response and improve short-wave performance.

The intermediate frequency amplifier consists of a two-stage cascade section composed of three I. F. transformers and two 6K7 amplifier tubes. Both primary and secondary windings of the I. F. transformers are tuned, and are made resonant at a frequency of 465 kilocycles. The second I. F. amplifier 6K7 tube is operated on self bias for all bands. This enables the second I. F. tube to deliver maximum power to the 6H6 diode rectifier.

The output of the I. F. amplifier is applied to the 6H6 diode rectifier, which is a combined second detector, automatic volume control, and automatic frequency control bias supply tube. The secondary of the third I. F. transformer is center-tapped providing the push-pull connection to the 6H6 diode plates necessary to secure the variable grid bias for the 6J7 automatic frequency control tube. This automatic frequency control feature is completely described in a following paragraph. One diode of the 6H6 twin-diode tube is used to detect the modulated signal furnished by the I. F. amplifier. The audio frequency developed by this action is transferred to the audio frequency system for amplification and reproduction. The D.C. voltage resulting from detection is used for automatic volume control action and for the operation of the colorama tuning tube. The diode load resistor consists of R-24, R-31 and R-32 in series. The D.C. voltage developed across R-32 is applied as automatic control grid bias to the R. F. converter and first I. F. amplifier tubes. Initial bias for these tubes is supplied by returning the diode load resistor to a negative voltage supply of approximately 3 volts on the main bleeder resistor.

Automatic bias voltage developed across R-31 and R-32 is used to control the Colorama Tuning tube. Switch S-4 makes it possible to apply full or partial voltage to the tube, thereby allowing control of the color indication in accordance with prevailing receiving conditions. A complete description of Colorama Tuning is given in a later paragraph.

The audio frequency present across R-31 and R-32 is impressed upon the volume control, R-15, through capacitor C-24. The movable arm on the volume control selects the amount of audio signal applied to the control grid of the 6F5 audio amplifier and thus regulates the output of the receiver. Across the volume control, R-15, is placed a network of capacitors and a resistor. The music-speech switch is found in this circuit, and when closed removes the bass compensation. The output of the 6F5 audio tube is resistance coupled to the grid of the 6L6 beam power tetrode. The plate circuit of the 6L6 is suitably matched to the electro-dynamic loud-speaker by means of a step-down output transformer.

The tone control is found in the plate circuit of the 6F5 first audio tube and consists of capacitor C-43 in series with a variable resistor R-16 across the 6F5 plate resistor R-17. Cutting out resistance in R-16 lessens the treble response of the receiver. Between the plate of the 6F5 first audio tube and the grid of the 6L6 tetrode output tube are found two capacitors in series, C-41 and C-42. The smaller capacitor, C-42, is shorted out by the wave band switch for operation on the broadcast band. On the two short-wave bands it is left in the circuit to attenuate the low frequency response and thereby lessen the tendency toward microphonic howl.

Plate and grid voltage for all tubes are supplied by the power supply system employing a 83A full-wave rectifier tube which, together with a suitable network of resistors and capacitors, supplies the required voltages and filtering action.

Automatic Frequency Control

These receivers employ automatic frequency control (AFC) which is a device for automatically controlling the oscillator frequency in such a way that, although the receiver is not exactly tuned to the signal being received, the correct intermediate frequency will still be produced. This control of the oscillator frequency is secured by means of the 6J7 AFC tube, so connected to the oscillator that it draws a lagging current from the tank circuit and thus gives the effect of a shunt inductance. Variation of the D.C. grid bias on the 6J7 control tube will affect the mutual conductance of the tube, thereby changing the amount of lagging current drawn from the oscillator tank with a consequent effect of variation of the amount of shunt inductance connected across the oscillator coil. This alters the total inductance in the oscillator tuned circuit and changes its resonant frequency.

Grid bias for the 6J7 control tube, which will vary in accordance with the amount of detuning of the receiver, is obtained from the 6H6 diode rectifier operating in conjunction with its special I. F. transformer. This control voltage is the difference between the drop across resistor R-24, the load resistance for one diode section of the 6H6 diode rectifier, and the drop across resistors R-31 and R-32, which constitute the load resistance for the other diode section. When the receiver is correctly tuned to the incoming signal, the intermediate frequency produced will be 465 kc. which is the resonant frequency of the tuned circuit feeding the 6H6 diode rectifier. Under this condition each diode plate receives equal signal voltage and the D.C. voltage drops across the load resistors will be equal, giving no change in grid bias on the 6J7 control tube. If the receiver is so tuned that the intermediate frequency produced is above 465 kc., the signal voltage applied to diode plate No. 2 will exceed that applied to diode plate No. 1. In this case, the D.C. voltage drop across load resistor R-31 and R-32 will be larger than that across load resistor R-24 and a resultant voltage will be produced which will increase the 6J7 AFC tube grid bias, lowering the mutual conductance of the tube and causing it to draw less lagging current from the oscillator tank. This is the same effect as would be produced by increasing the amount of shunt inductance across the oscillator coil and the oscillator frequency is thereby lowered by the amount necessary to compensate for the detuning. The opposite takes place when the receiver is tuned so as to produce an intermediate frequency below 465 kc. Diode plate No. 1 then receives more signal voltage than diode plate No. 2 and the resultant voltage developed across the load resistance is such as to decrease the grid bias on the 6J7 AFC tube. This causes a larger current to be drawn from the oscillator tank circuit, which in effect is the same as a decrease in shunt inductance with its consequent increase in oscillator frequency to overcome the detuning.

ALIGNMENT PROCEDURE

The receiver should first be allowed to run for fifteen minutes in order to reach its approximate normal operating temperature. Before making any adjustments, it is wise to determine the correctness of the existing alignment. This may be done by supplying a signal to the receiver from the test oscillator at the alignment frequency and inserting a "Tuning Wand" into the coil involved. The tuning wand consists of a rod of insulating material having a ring of non-magnetic metal attached to one end, and a small core of finely divided iron compressed into the opposite end. By inserting the metal ring end into the center of the R. F. coil, the inductance of this coil is lowered, increasing its resonant frequency. Inserting the iron-filled end into the coil raises its inductance, lowering its resonant frequency. If the R. F. circuits are in exact alignment, inserting either end of the tuning wand into the coil will result in a decrease in output. When an increase of signal is obtained with the iron-filled end of the wand, a decrease in resonant frequency of that circuit by increasing its trimmer capacity is indicated. When an increase of signal is obtained with the metal ring, a decrease in trimmer capacity is indicated.

Changes Indicated by Wand

Wand	Signal	Trimmer Adjustment Required
Metal Ring	Decrease	None
Iron Fillings	Decrease	
Metal Ring	Increase	Decrease capacity
Iron Fillings	Decrease	
Metal Ring	Decrease	Increase capacity
Iron Fillings	Increase	

ALIGNMENT FREQUENCIES

I.F.	Band "B"	Band "C"	Band "D"	Wave Trap
465 kc.	980 kc.	3280 kc.	12,000 kc.	465 kc.
	1500 kc.			

In order to align these receivers properly it is necessary to have available:

1. A modulated test oscillator capable of producing the above alignment frequencies.
2. An output indicator, such as a high resistance a-c voltmeter with a maximum scale reading of 5 to 5 volts, or a neon lamp indicator.
3. An alignment tool consisting of a fiber shaft screwdriver.
4. A tuning wand

To realize the full advantage of the performance built into these receivers at the factory, circuit alignment using cathode ray oscilloscope equipment is much to be *preferred*. The oscilloscopic method is particularly advantageous in aligning the I. F. tuned circuits.

The location of all alignment trimmer capacitors, as well as socket voltages, is shown in Fig. 8.

1. Visual Alignment of I. F.

For visual alignment it is necessary to vary the frequency of an unmodulated test oscillator signal over a range extending on both sides of the peak frequency. This variation must take place in synchronism with the horizontal traverse of the cathode ray beam on its screen. The frequency modulator must, therefore, provide means for synchronizing the periodic test frequency variation with the cathode ray horizontal deflection circuit. The test oscillator may advantageously have facilities for audio frequency amplitude modulation of a fixed radio frequency test signal, as well as for frequency modulation, but audio modulation is not required for visual I. F. alignment.

Instead of an output meter across the speaker voice coil, the vertical plates of the cathode ray tube are connected across the load resistor of the diode rectifier. With the frequency modulator in operation in conjunction with the test oscillator, the resonance curve of the circuit under test will be then shown on the screen.

Set the tuning dial indicator at the low end of the broadcast band to some point where no signal is received since an extraneous signal might interfere with the aligning process. The volume control should be in an "off" or nearly "off" position. Apply a frequency modulated signal to the grid of the 1st I. F. amplifier tube through a .05-mfd. (RC-072) capacitor leaving the grid cap in place. Connect the vertical plates of the oscilloscope between ground and the junction point between R-24 and R-31, which are the diode load resistors, and with the AFC switch in the "off" position proceed to align the primary and secondary of the 2nd I. F. and the APC I. F. transformers.

The object should be to make the two curves coincide with each other at the top and throughout their length with the maximum amplitude obtainable. This will require that all four I. F. trimmers be adjusted in the usual manner *excepting the AFC secondary (hexagonal nut) trimmer which must be adjusted for minimum amplitude* before the curves will coincide properly. Fig. 4 gives the appearance of the curve when the alignment adjustments have been completed satisfactorily thus far. Apply the same frequency modulated input to the grid of the converter (6A8) tube through a .05-mfd. capacitor as before. Adjust the primary and secondary of the 1st I. F. transformer until the curves coincide as before and have the appearance of Fig. 4.

A further adjustment of the AFC secondary (hexagonal nut) trimmer is necessary in order to complete the I. F. alignment satisfactorily. Apply the same signal to the grid of the second I. F. amplifier tube. Unsolder the ground end of C-31 and connect the visual deflecting plates of the oscilloscope between ground and the 6H6 cathode prong No. 8. Since the cathode prong is inaccessible this connection can be made at the AFC switch contact marked "Point A" on the rear barrier, Fig. 8.

Carefully adjust the AFC secondary trimmer until a curve as shown at A in Fig. 5 is obtained. It is necessary to make this adjustment so that when the two halves of the curve are symmetrical and balanced exactly as they are in the appearance of the other I. F. curves checked by visual alignment.

2. I. F. Wave Trap Alignment

Set the band switch to Band "B" and tune receiver to about 1000 kc.

With the test oscillator still set at 465 kc. apply this signal to the antenna terminal through a dummy antenna consisting of a 400-ohm resistor and 250-mmfd. capacitor in series. With the 465 kc. signal applied to the antenna terminal, adjust the I. F. Wave Trap Trimmer for minimum output indication.

3. R. F. Alignment

First check the position of the dial pointer by rotating the tuning condenser to maximum capacity position, i.e., plates fully meshed. At this position, the pointer should coincide with the end mark at the left-hand end of the scale. If it does not, it may be set by loosening the dial drum set screws and rotating the drum on the tuning condenser shaft. Hold the tuning condenser rotor while doing this, to prevent its rotating. Tighten the two set screws after the pointer is correctly set. During R. F. alignment the AFC switch must be set in its "Off" (counterclockwise) position.

Band "B" (540-1680 Kc.)

Set the test oscillator for operation at 1500 kc. and connect its output to the antenna terminal of the receiver through the dummy antenna described under I. F. Wave Trap Alignment. Tune the receiver until the pointer is at 1500 on the scale. Set the tone control for minimum high response and reduce the volume control setting so as to avoid excessive noise response. Adjust the Band "B" oscillator, R. F., and antenna trimmers respectively (C-13, C-7, and C-2, Fig. 8) to give maximum deflection on the output meter. Maintain the test oscillator output at the lowest level which will give an easily readable output indication.

Now set the test oscillator at 580 kc. and tune the receiver to resonance with this signal. Adjust the 580 kc. padding capacitor, C-13, rocking the tuning condenser back and forth through resonance as the padding capacitor is adjusted and note the deflection of the tuning meter each time the receiver is tuned through resonance. Leave the padding capacitor at the setting which gives greatest deflection.

Retune the receiver to 1500 kc. and set the test oscillator for this frequency. Check the alignment by again adjusting the Band "B" oscillator, R. F. and antenna trimmers for maximum deflection on the tuning meter.

Band "C" (1680-6000 Kc.)

No trimmers are provided for alignment of the R. F. and antenna transformers in Band "C" of these receivers. Correct tracking between R. F. and antenna transformers is obtained by the action of the capacity coil, L-3, and between oscillator and the other tuned circuits by means of the adjustable oscillator trimmer, C-14, and the fixed padding capacitor, C-54.

Turn the band switch to Band "C." Set the test oscillator at 3280 kc., and tune the receiver to resonance at this frequency. Adjust the Band "C" oscillator trimmer, C-14, for maximum output indication on the tuning meter, rocking the tuning condenser back and forth through resonance while making this adjustment.

Band "D" (6.0-18.0 Mc.)

Turn the band switch to Band "D." Set the test oscillator at 12,000 kc. (12.0 mc.) and tune the receiver until the pointer coincides with the 12.0 mark. Adjust the Band "D" oscillator trimmer, C-15, to give maximum output indication.

It will probably be found that there will be two settings of the oscillator trimmer that will give an output response. The lower capacity setting of the trimmer is the one that should be used. To be sure that correct adjustment has been obtained, tune for the image signal at 17.07 mc. with the Test Oscillator set at 16.0 mc. It may be necessary to increase the test oscillator output to obtain response at this point.

Retune the receiver to 12.0 mc. and adjust Band "D" antenna and R. F. trimmers, respectively (C-8 and C-10) for maximum output indication. When adjusting the R. F. trimmer, C-10, rock the tuning condenser back and forth through resonance as in the 580 kc. padding capacitor adjustment.

4. I. F. Alignment with Output Meter

Although the use of the cathode-ray oscillograph for alignment purposes is to be *preferred*, it is possible to make the I. F. adjustments with reasonable accuracy using a 465 kc. signal generator and output meter.

Place a modulated signal of 465 kc. on the grid of the last I. F. (6K7) tube with the volume control set at maximum and the AFC switch turned off. Place a low range A.C. voltmeter or other output indicator across the voice coil of the loud-speaker. Adjust the output of the signal generator so that an indication of not more than two or three volts is obtained on the output meter.

Adjust and readjust the primary trimmer for maximum output and *the secondary for minimum output.* This latter adjustment will be very broad. Apply the signal input to the grid of the 1st I. F. (6K7) tube and adjust both primary and secondary trimmers for maximum output, reducing the input as necessary to obtain approximately the same output indication as before. Apply the signal input to the grid of the converter (6A8) tube and adjust both primary and secondary trimmers for maximum output indication in the same manner as before.

It is now necessary to make a fine adjustment of the secondary trimmer of the last I. F. (AFC) transformer, which is as follows: Without changing the frequency of the signal generator, place the input lead on the rubber insulation of the converter (6A8) grid lead. This will provide a small signal input through the capacity between the leads. Increase the attenuator setting if necessary to make the output audible. If the signal generator is provided with a means of removing the modulation, this should be done. However, the adjustment may be carried out satisfactorily even with a modulated generator signal.

Now tune in any broadcast signal in the usual manner and tune carefully for zero beat between this carrier and the 465 kc. signal generator. It may be necessary to use a short antenna or to remove it entirely if the station is a strong local. Throw the AFC on and adjust the last I. F. secondary (AFC) trimmer by ear for zero beat. This adjustment is very critical and must be made with great care. When the adjustment is properly made, there will be no appreciable change from zero beat as the AFC switch is thrown off and on. This completes the alignment of the I. F. and AFC circuits.

The alignment of the oscillator and R. F. circuits may be carried out in the usual manner. However, the AFC switch must remain in the off position.

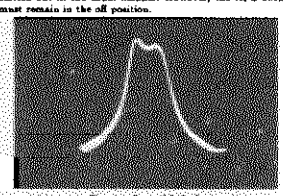

Fig. 4. Overall I. F. Curve

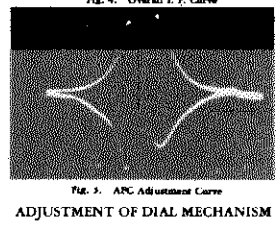

Fig. 5. AFC Adjustment Curve

ADJUSTMENT OF DIAL MECHANISM

The dial mechanism (Fig. 8) is rigidly mounted to the chassis by means of two brackets and four self-tapping screws. The dial pointer is operated by means of an "automatic vernier" reduction drive unit, mounted on the gang condenser, and connected to the gang rotor by a set of anti-backlash gears. Motion imparted to the gang condenser rotor is transmitted through a series of pulleys and an interconnecting cable to the dial pointer slider which is supported on a rail above the dial scale.

To Mount Escutcheon

Care should be taken to use a well-ground screw driver of proper size to fasten the screws in the escutcheon plate. Holes have been jigged in the cabinet front panel to insure the proper location of the escutcheon with respect to the scale housing.

To Replace Pointer and Drive Cable

Remove the defective pointer or drive cable to be replaced. Rotate the drive wheel (14) counterclockwise until the gang condenser plates are fully open. Place the end of the cable having an eyelet in slot [A]. Thread the cable as shown in Fig. 4, making certain that the cable passes *over* the pin [B] and runs along the *correct* grooves, the longest end looping over the tension spring (16). Check the position of the drive wheel (14) on the condenser shaft to make sure that the cable coming off the right-hand idler pulley lines up with the grooves in the drive pulley. Also, as the condenser plates become fully meshed, the drive wheel (14) should just meet the bushing [D] of the reduction drive unit (30). With the drive wheel in this position, place the pointer on the rail [E] and, with the tip of the pointer (11) on the extreme left-hand dial scale division, crimp the pointer tab on the drive cable.

To Insert "Personaliser Strip"

The "Personaliser Strip" designed for use in these receivers is marked R-10. To install the strip, remove the holder from its mounting clips and slide the paper slip and metallic frame out of the celluloid cover. Replace the paper slip with a "Personaliser Strip" suitable for the locality in which the receiver will be operated and reassemble. Care should be taken to avoid scratching the back of the "Personaliser Strip" when sliding the strip and metallic frame back into the celluloid cover.

©John F. Rider, Publisher

MODELS E-101, E-105
E-106

GENERAL ELECTRIC CO.

Socket, Trimmers
Voltage, Parts List
Colorama Tuning

REPLACEMENT PARTS

Stock No.	Description	List Price
	CHASSIS ASSEMBLY	
*RB-008	BOARD—Terminal Board Double-lug	$0.10
*RB-009	BOARD—Terminal Board Single-lug	.15
*RB-026	BOARD—Antenna Ground Terminal Board	.10
RB-043	BOARD—Terminal Board Four-lug	.15
RB-139	BRACKET—Gang Condenser Mounting Brackets	.15
*RC-034	CAPACITOR—.005 Mfd., 200 V. Paper (C-42)	.25
*RC-034	CAPACITOR—.01 Mfd., 200 V. Paper (C-26, C-42, C-48)	.25
RC-036	CAPACITOR—.008 Mfd., 200 V. Paper (C-39)	.25
RC-042	CAPACITOR—.01 Mfd., 1000 V. Paper (C-45)	.30
*RC-046	CAPACITOR—.02 Mfd., 200 V. Paper (C-34, C-38)	.25
*RC-072	CAPACITOR—.05 Mfd., 200 V. Paper (C-4, C-11, C-18, C-23, C-28, C-33, C-36, C-50)	.25
*RC-091	CAPACITOR—.05 Mfd., 400 V. Paper (C-25, C-41, C-62)	.30
*RC-123	CAPACITOR—.1 Mfd., 400 V. Paper (C-17)	.35
RC-153	CAPACITOR—.25 Mfd., 400 V. Paper (C-44, C-46)	.40
RC-155	CAPACITOR—.5 Mfd., 100 V. Paper (C-52)	.45
RC-300	CAPACITOR—1 Mfd., 100 V. Paper (C-31)	.60
RC-301	CAPACITOR—5 mmfd., Mica (C-59)	.35
*RC-306	CAPACITOR—30 mmfd., Mica (C-6)	.35
*RC-310	CAPACITOR—50 mmfd., Mica (C-21)	.35
RC-235	CAPACITOR—100 mmfd., Mica (C-22, C-35, C-58)	.25
RC-242	CAPACITOR—150 mmfd., Mica (C-37)	.35
RC-321	CAPACITOR—400 mmfd., Mica (C-40)	.30
*RC-344	CAPACITOR—1200 mmfd., Mica (C-54)	.35
*RC-349	CAPACITOR—2000 mmfd., Mica (C-61)	.40
RC-360	CAPACITOR—2850 mmfd., Mica (C-16)	.50
RC-414	CAPACITOR—15 Mfd., 350 V. Wet Electrolytic (C-46)	1.25
RC-423	CAPACITOR—30 Mfd., 100 V. Wet Electrolytic (C-13)	.90
RC-434	CAPACITOR—30 Mfd., 200 V. Wet Electrolytic (C-30)	1.10
RC-435	CAPACITOR—30 Mfd., 300 V. Wet Electrolytic (C-47)	1.25
RC-501	CAPACITOR—4 Mfd., 350 V., 10 Mfd., 50 V., 10 Mfd., 25 V. Dry Electrolytic (C-55, C-56, C-57)	1.75
RC-502	CAPACITOR—Twin Trimmers, Antenna & R. F., Bands B & D (C-2, C-3) (C-7, C-10)	.40
RC-503	CAPACITOR—Triple Trimmers: Oscillator Bands B, C & D (C-12, C-14, C-15)	.60
RC-522	CAPACITOR—Oscillator Padder Capacitor 250-350 mmfd. (C-13)	.40
RC-711	CONDENSER—Gang Tuning Condensers (Without trimmers, including drive) (C-5, C-8, C-9)	4.75
RC-755	CAPACITOR—Line Capacitor (C-50, C-51) .01 .01 Mfd., 250 V. A.C. Paper	.60
RC-815	CABLE—Speaker Cable (Complete)	.50
RC-860	CORD—Power Cord	.85
RC-902	CUSHION—Gang Condenser Mounting Cushion (Pkg. of 3)	.10
RE-012	ESCUTCHEON—Escutcheon Plate (with Mtg. Scws.)	1.25
*RP-002	FOOT—Chassis Mounting Foot	.30
*RG-001	GRID CAP—Control Grid Clip (Pkg. of 6)	.10
RG-102	GASKET—Escutcheon Rubber Gasket	.20
RG-103	GASKET—Escutcheon Felt Gasket	$0.10
*RK-004	KNOB—Control Knob (Push-on) (Pkg. of 5)	.40
RL-017	COIL—Antenna Coil, Band B & C (L-3, L-4, L-5)	1.15
RL-018	COIL—Antenna Coil, Band D (L-8, L-7)	.75
RL-122	COIL—R. F. Coil, Band B & C (L-8, L-9)	1.10
RL-124	COIL—R. F. Coil, Band D (L-10, L-11)	.75
RL-226	COIL—Oscillator Coil, Band C (L-14, L-15)	.85
RL-227	COIL—Oscillator Coil, Band D (L-16, L-17)	.85
RL-228	COIL—Oscillator Coil, Band B (L-12, L-13)	.85
RL-310	REACTOR—"Colorama Tuning" Saturable Reactor, 60 Cycles (L-27, L-28)	3.00
RL-311	REACTOR—"Colorama Tuning" Saturable Reactor, 25/50 Cycles (L-27, L-28)	3.00
RQ-042	RESISTOR—220 ohm, ½ Watt Carbon (R-12) (Pkg. of 5)	.60
RQ-051	RESISTOR—470 ohm, ½ Watt Carbon (R-7) (Pkg. of 5)	.60
*RQ-059 (RR-014)	RESISTOR—1000 ohm, ½ Watt Carbon (R-16) (Pkg. of 5)	.70
RQ-067	RESISTOR—2200 ohm, ½ Watt Carbon (R-4, R-5, R-37) (Pkg. of 5)	.60
RQ-069	RESISTOR—2700 ohm, ½ Watt Carbon (R-35) (Pkg. of 5)	.60
RQ-075	RESISTOR—4700 ohm, ½ Watt Carbon (R-6, R-36) (Pkg. of 5)	.60
RQ-081	RESISTOR—6800 ohm, ½ Watt Carbon (R-39) (Pkg. of 5)	.60
*RQ-083 (RR-021)	RESISTOR—10,000 ohm, ½ Watt Carbon (R-14) (Pkg. of 5)	.60
RQ-097	RESISTOR—39,000 ohm, ½ Watt Carbon (R-42) (Pkg. of 5)	.60
RQ-099	RESISTOR—47,000 ohm, ½ Watt Carbon (R-3, R-38) (Pkg. of 5)	.60
*RQ-107 (RR-060)	RESISTOR—100,000 ohm, ½ Watt Carbon (R-1, R-2, R-17, R-18, R-27) (Pkg. of 5)	.70
RQ-115	RESISTOR—220,000 ohm, ½ Watt Carbon (R-22) (Pkg. of 5)	.70
RQ-117	RESISTOR—330,000 ohm, ½ Watt Carbon (R-41) (Pkg. of 5)	.70
RQ-123	RESISTOR—470,000 ohm, ½ Watt Carbon (R-8, R-9, R-10) (Pkg. of 5)	.70
RQ-127	RESISTOR—1.0 Meg., ½ Watt Carbon (R-23, R-24) (Pkg. of 5)	.70
RQ-275	RESISTOR—4700 ohm, ½ Watt Carbon (R-26) (Pkg. of 5)	.70
RQ-455	RESISTOR—12,000 ohm, 1 Watt Carbon (R-10) (Pkg. of 5)	.75
RR-890	RESISTOR—15 ohm, 2 Watt Flexible (R-29) (Pkg. of 5)	.80
RR-331	RESISTOR—15 ohm, 1 Watt Flexible (R-30) (Pkg. of 6)	.75
RR-719	RESISTOR—Candohm Tapped Bleeder Resistor (R-5, 21, 22, 25, 26)	1.10
RS-188	SHIELD—1st and 2nd I. F. Coil Shield Can	.20
RS-189	SHIELD—3rd I. F. Coil Shield Can	.20
*RS-300	SOCKET—8 Pin Tube Socket (Pkg. of 5)	.75
*RS-304	SOCKET—5 Pin Tube Socket (Pkg. of 5)	.75
RS-324	SWITCH—Band Change Switch (S-1, S-2, S-3)	2.75
RS-325	SWITCH—"Colorama" Sensitivity Switch (S-4)	.50
RS-326	SWITCH—Automatic Frequency Control Switch (S-7)	.50
RS-423	SPRING—Knob Spring "Push-on" type (Pkg. of 10)	.25
RT-089	TRANSFORMER—Universal Power Transformer 105/130 200/250 V. 40/60 Cycles (T-2)	10.25
RT-091	TRANSFORMER—Power Transformer 115 V. 50/60 Cycles (T-2)	$8.95
RT-092	TRANSFORMER—Power Transformer 115 V. 50/60 Cycles (T-2)	10.95
RT-235	TRANSFORMER—1st I. F. Transformer (Complete) (L-18, 19) (C-23, 24)	2.10
RT-236	TRANSFORMER—2nd I. F. Transformer (Complete) (L-20, 21) (C-26, 27)	2.10
RT-237	TRANSFORMER—3rd I. F. Transformer (Complete) (L-22, 23) (C-29, 30)	4.15
RT-710	TONE CONTROL—Tone Control and Speech Clarifier Switch (R-18, S-5)	1.00
RV-015	VOLUME CONTROL—Volume Control and Power Switch (R-15, S-6)	1.35
RW-007	WINDOW—"Personaliser Strip" Window (Celluloid)	.10
RW-008	WINDOW—Escutcheon Window	.50
RW-401	WAVE TRAP—Wave Trap Coil Assembly (L-1, C-1)	.90
	8 IN. SPEAKER ASSEMBLY E-101	
RC-909	CONE—8-in. Type Cone and Voice Coil (Gasket Included) (L-25)	1.15
RC-990	CLAMP—8-in. Cone Spider Clamp and Screw	.05
*RP-012	PLUG—Female Speaker Plug	$0.20
RP-044	PLUG—Male Speaker Plug	.20
RP-053	PLUG—Female Speaker Plug (Late Prod.)	.20
RP-053	PLUG—Male Speaker Plug (Late Prod.)	.20
RS-084	SPEAKER—8-in. Type Speaker (Complete with Output Transformer) (L-24, 25, 26, T-1)	8.00
RS-416	SPRING—Voice Coil Leads Spring (Pkg. of 2)	.10
RT-415	TRANSFORMER—Output Transformer (T-1)	1.75
	12 IN. SPEAKER ASSEMBLY E-105, E-106	
RC-910	CONE—12-in. Type Cone and Voice Coil (Gasket Included) (L-25)	1.45
RC-991	CLAMP—12-in. Cone Spider Clamp and Screw	.05
*RP-012	PLUG—Female Speaker Plug	$0.20
RP-044	PLUG—Male Speaker Plug	.20
RP-053	PLUG—Female Speaker Plug (Late Prod.)	.20
RP-053	PLUG—Male Speaker Plug (Late Prod.)	.20
RS-085	SPEAKER—12-in. Type Speaker (Complete with Output Transformer) (L-24, 25, 26, T-1)	10.50
RS-416	SPRING—Voice Coil Leads Spring (Pkg. of 2)	.10
RT-415	TRANSFORMER—Output Transformer (T-1)	1.75
	DIAL MECHANISM	
RB-136	BRACKET—Band Switch Operating Shaft Bracket (35)	.10
RB-137	BRACKET—Dial Mask and Reflector Box Support Bracket (36)	.20
RB-140	BRACKET—"Colorama" Dial Lamp Bracket (Less Lamps) (30)	1.10
RB-513	BOX—Dial Mask and Reflector Box (31)	.25
RC-817	CABLE—Drive Cable (Pkg. of 5) (10)	.25
RC-818	CABLE—Band Change Cable (Pkg. of 5) (13)	.25
RC-963	CUSHION—Rubber Roller Cushion (Dial) (Pkg. of 2) (29)	.10
RC-964	CAP—Dial Cord Tension (Drive End) (17)	.10
RC-965	CAP—Dial Cord Tension (End) (33)	.10
RD-086	DRIVE—Tuning Condenser Reduction Drive (39)	1.10
RD-087	DIAL—"Slide-Rule" Dial Scale (6)	.25
RF-202	FRAME—"Perceslain Strip" Frame	.15
RG-006	GEAR—Band Switch Drive Gear (40)	.15
RG-007	GEAR—Band Switch and Dial Operating Gear (41)	.30
RL-908	LAMP—"Colorama Tuning" Green Lamp (Pkg. of 10) (43)	1.80
RL-909	LAMP—"Colorama Tuning" Red Lamp (Pkg. of 10) (43)	1.80
RP-047	POINTER—Dial Pointer (Pkg. of 5) (11)	.25
RP-048	PULLEY—Gang Drive Pulley (14)	.25
RP-049	PULLEY—Drive Cord Idler Pulley (4)	.15
RS-417	SPRING—Dial Scale Spring (7)	.25
RS-418	SPRING—Gang Drive Pulley Spring (16)	.25
RS-507	SUPPORT—Dial Scale Spring Support (8)	.10
RS-907	SHAFT—Band Switch Drive Gear Shaft	.15

PRICES SUBJECT TO CHANGE WITHOUT NOTICE

SOCKET VOLTAGES

Tube No.	Cathode to Ground Volts D.C.	Screen Grid to Ground Volts D.C.	Plate to Ground Volts D.C.	Cathode Current M.A.	Heater Volts A.C.
6E7 R. F. Amp.	1	90	250	6.3	6.3
6E7 Oscillator	....	....	250	6.3	6.3
6A8 Converter	1	90	250	....	....
6E7 1st I. F. Amp.	1	90	250	6.3	6.3
6E7 2nd I. F. Amp.	2.3	95	250	6.7	6.3
6B6 Detector & AVC.	....	....	....	....	6.3
6F8 Audio Amplifier	1.3	....	*180	0.6	6.3
6L6 Output	**	280	280	66.3	6.3
6C5 Coloramas Control	1	....	195	10.0	6.3
6J7 AVC Control	20	95	95	1.4	6.3
5Z4 Power Rectifier	284 D.C.	....	620/340 R.M.S.	120.0	5.0

Measured on 115 volts supply. No signal input. Volume control maximum. Values may vary ±20% due to manufacturing tolerances. Voltmeter resistance 1000 ohms per volt.
* Measured from plate to ground. The plate voltage will drop to approximately one-half this value when signal is applied.
** Supply voltage passes through a 30,000 ohm resistor before reaching this point.
† Grid bias at source—2.3 volts.

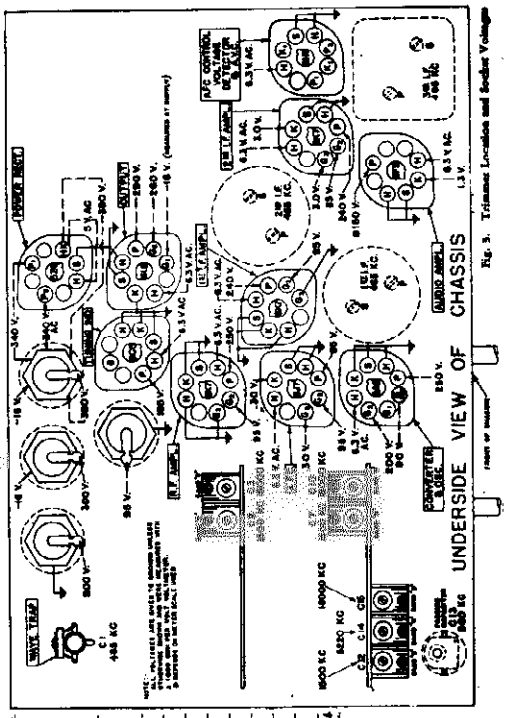

Fig. 3. Trimmer Location and Socket Voltage

Coloramo Tuning

These receivers are equipped with Color Tuning, a novel method which indicates the approach to resonance by means of a change in the color of the light illuminating the tuning scale.

The colored light is produced by a group of four red-stained pilot bulbs and a group of three green-stained bulbs behind the scale. At zero signal strength the red group is at full brilliance and the green invisibly dim. As the signal increases from zero, the red gets dimmer and the green brighter over a broad range until at extreme signal strength the green is fully bright and the red below visibility through the dial. Hence, as a station is tuned in the color changes smoothly, and the maximum change in the green direction is an indication of resonance.

Weak stations will produce a small color change and strong stations a larger change. The difference in signal strength between the weakest and the strongest station likely to be listened to, has been found to be so great in different localities that the receivers have been equipped with a two-position sensitivity range switch for "sensitive" and "insensitive" settings of the color tuning. The switch is located on the chassis near the power transformer and may be reached from the rear of the cabinet. In the sensitive position, the weakest station to which the user can listen comfortably above the general noise level, will shift the color to neutral while at resonance. Stronger stations give resonant points at bright green. In localities near a relatively large group of high-powered stations and having a high noise level, such as Chicago and New York, the range switch must be thrown to the insensitive position when standard one-door antennas are used, or else the color will be a fixed green over so wide a band that resonance cannot be accurately found. The difference in sensitivity is about twenty to one. On short-wave bands the band switch connects the color tuning to the sensitive setting and the switch on the chassis is inoperative. This is because practically all the short-wave signals are relatively weak. The insensitive setting is used only on the 540-1680 kc. band.

There is a group of four red and a group of three green pilot bulbs behind the scale. These are controlled by a Saturable Reactor, L-27 and L-28, in a circuit which is shown in the schematic diagram, Fig. 1. The saturable reactor is controlled by a D.C. coil which decreases its reactance smoothly from a high value at no D.C. to a very low value at maximum D.C. The saturable reactor acts very much like a dimming rheostat except that it is controlled by the D.C. plate current of a 6C5 tube used solely for that purpose. This tube receives for its bias a portion of the AVC voltage of the set so that at no signal the bias is nearly zero. At this point, the plate current is at maximum; therefore, the red is brightest and the green invisibly dim.

Some things which may affect the operation of color tuning are as follows:

Seven colored bulbs are used to give good diffusion of color over the scale; but if one of the seven fails it unbalances the color tuning mechanism when the assembly is replaced. The bulbs are all good, try removing the antenna. Next try replacing the 6C5 coloramo tube, or replace the rectifier. Sometimes the antenna noise level is so high that it dims the red color like a signal. If the tube is the set becomes weak, or the set is out of alignment, or for any other reason loses sensitivity the color tuning will appear insensitive.

NOTE: For other Dial Mechanism adjustment notes, see data on Model E-91.

©John F. Rider, Publisher

GENERAL ELECTRIC CO.

MODEL A-125
Schematic

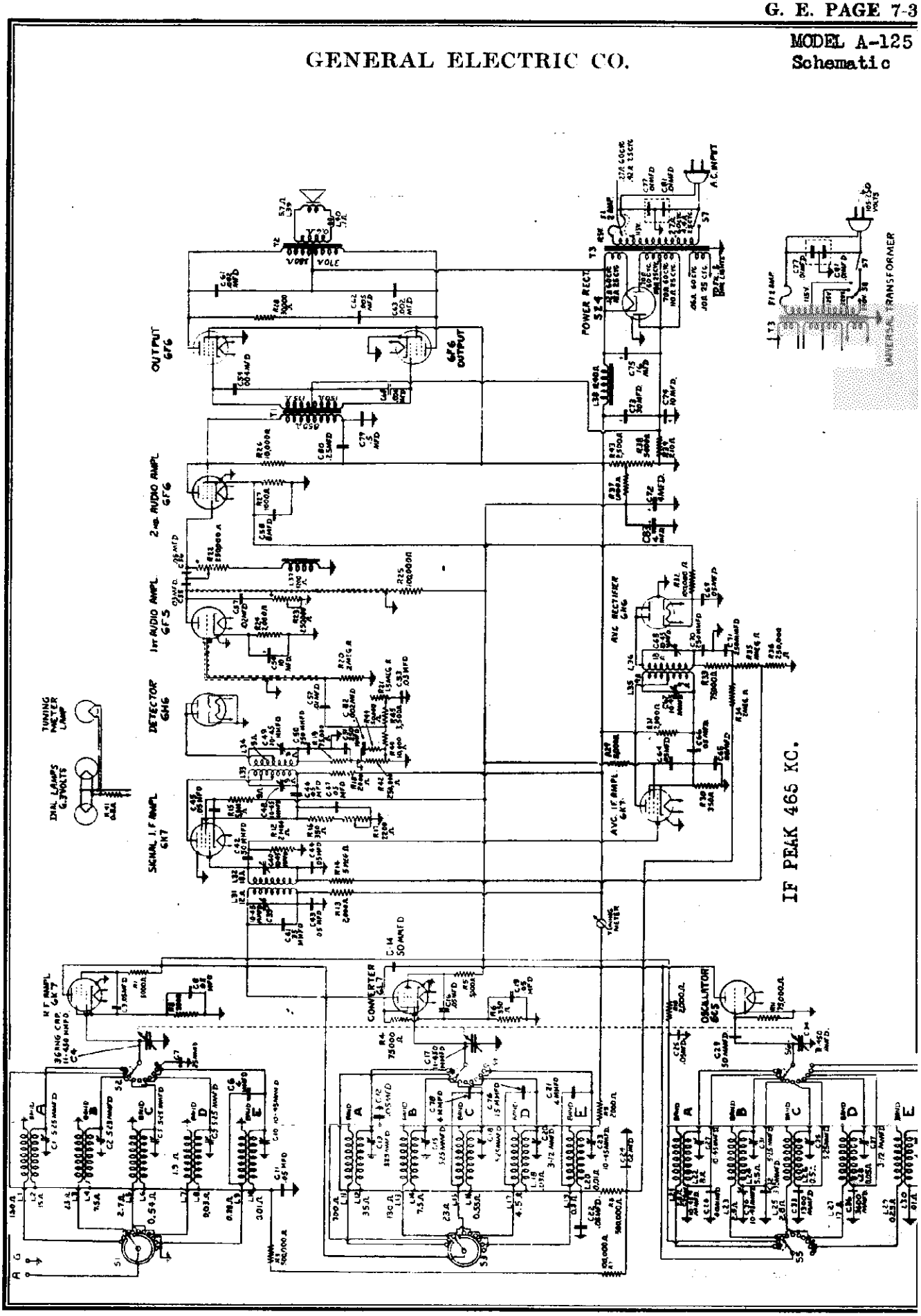

©John F. Rider. Publisher

MODEL A-125
Chassis Wiring
Transformer Data

GENERAL ELECTRIC CO.

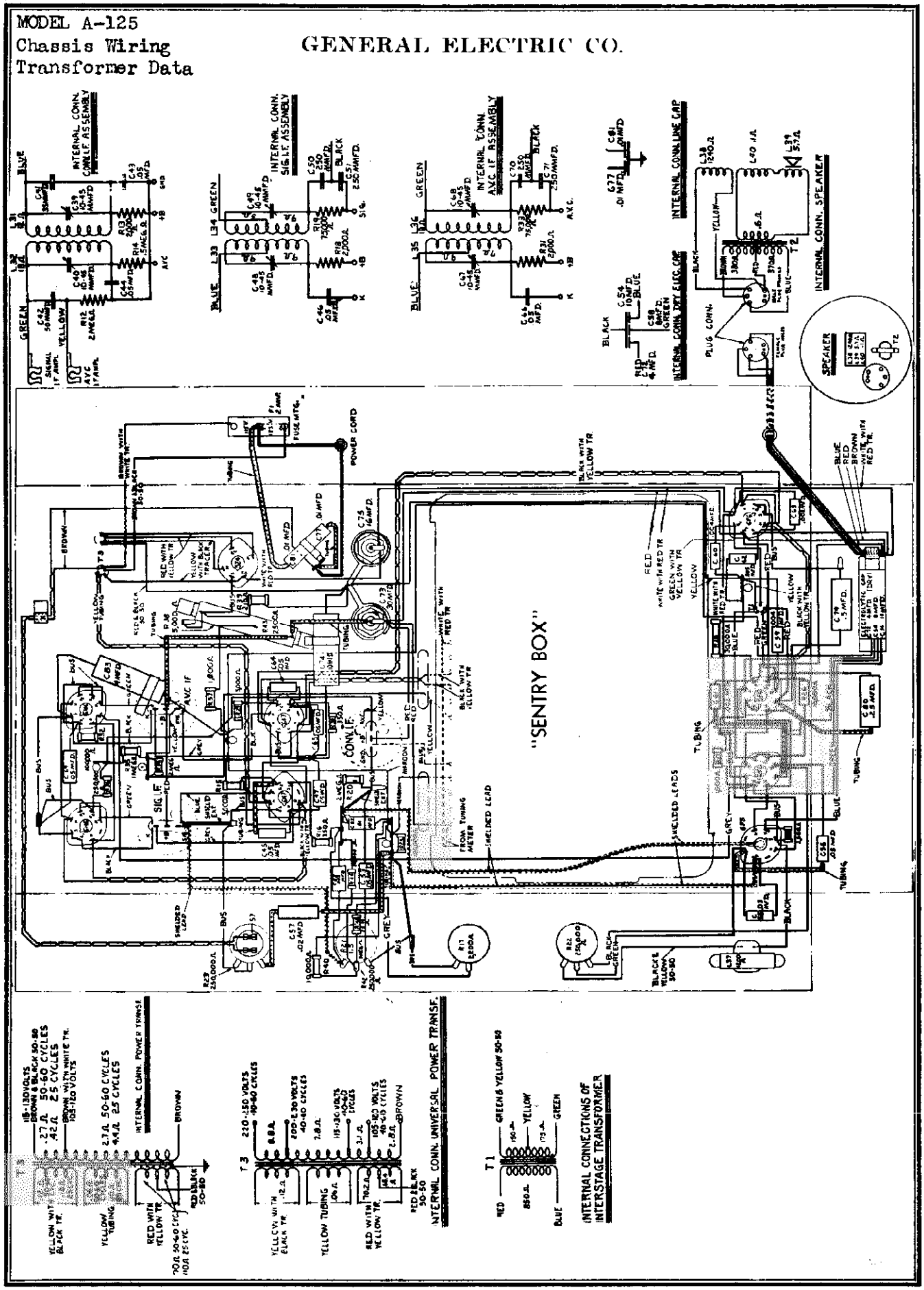

©John F. Rider, Publisher

MODEL A-125
"Sentry Box"
Chassis Wiring

GENERAL ELECTRIC CO.

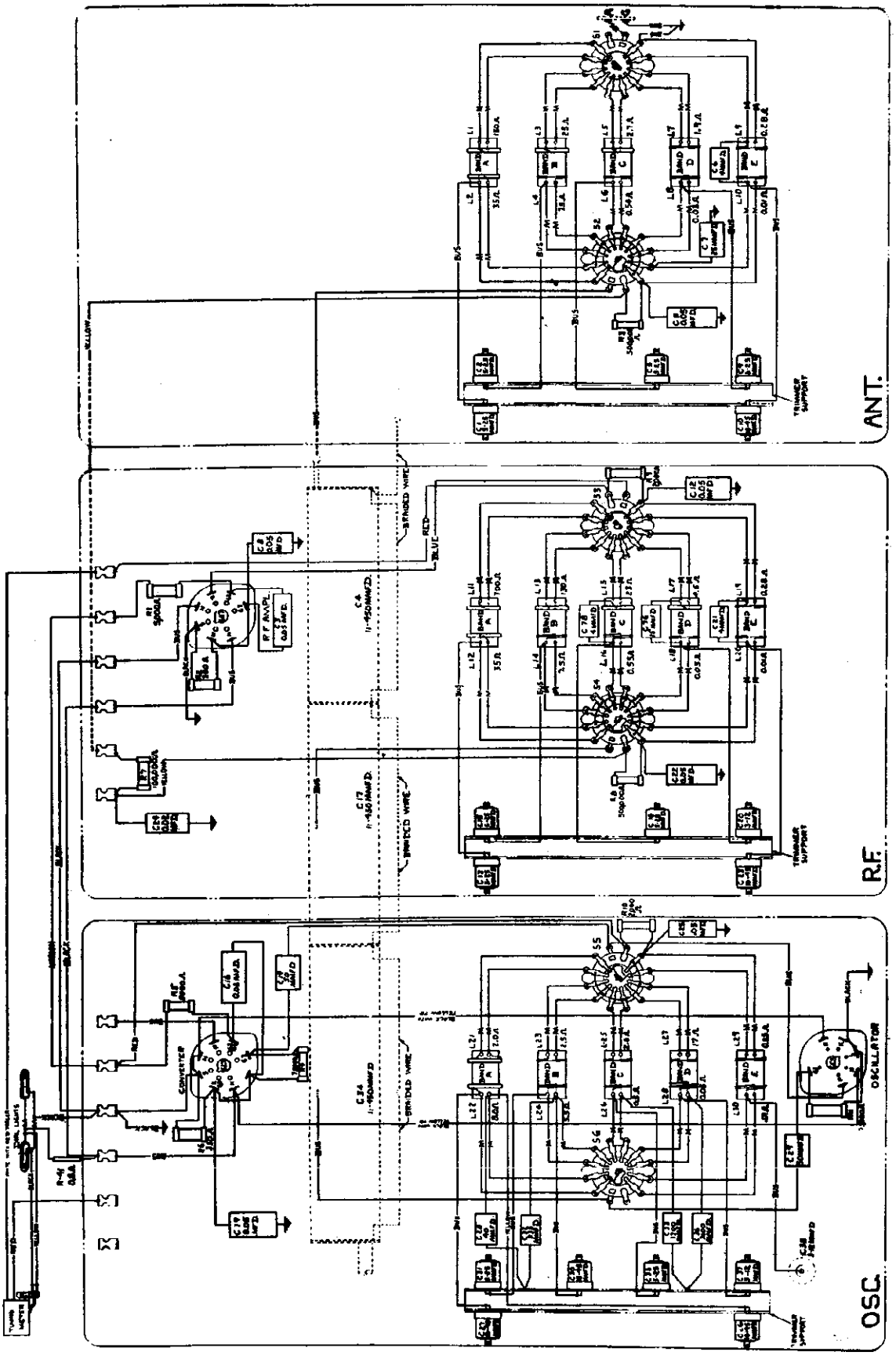

Fig. 4. "Sentry Box" Wiring Diagram

©John F. Rider, Publisher

MODEL A-125
Socket, Trimmers
Voltage
Dial Mechanism

GENERAL ELECTRIC CO.

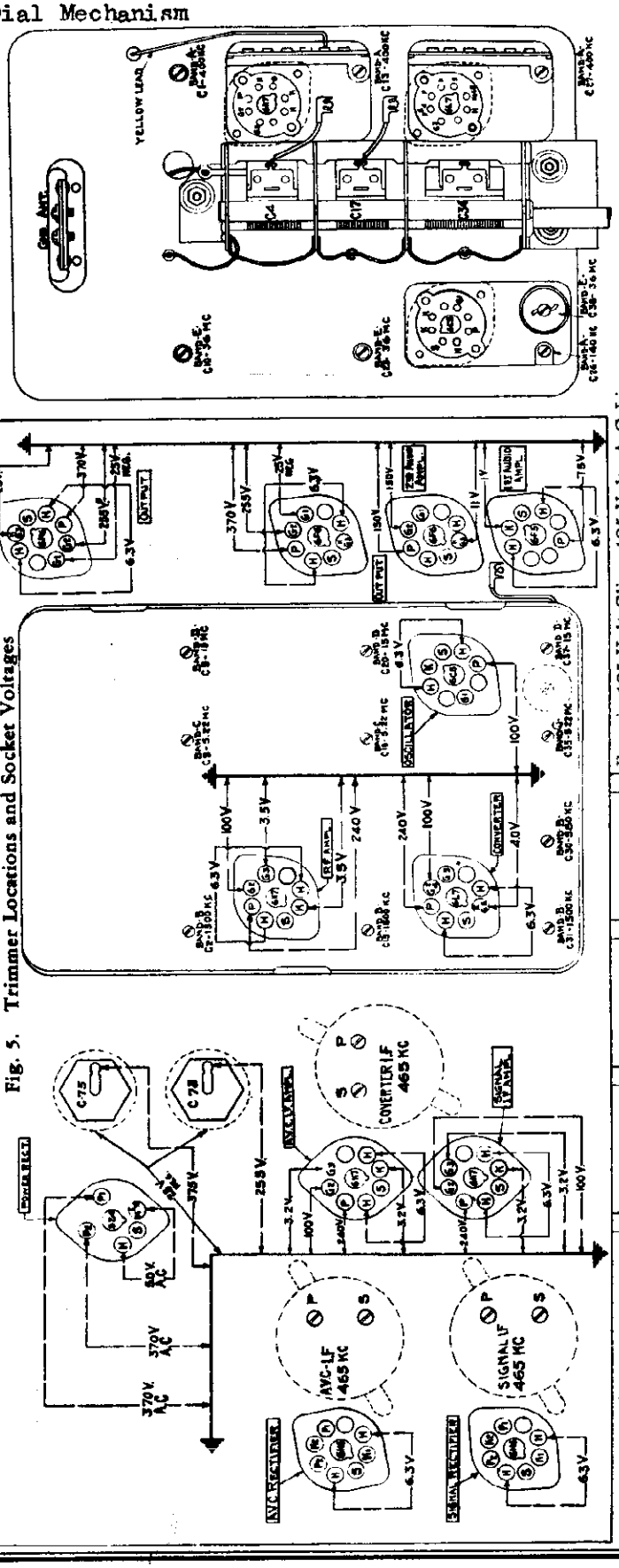

Fig. 5. Trimmer Locations and Socket Voltages

Fig. 8. Dial Mechanism

©John F. Rider, Publisher

©John F. Rider, Publisher

MODEL A-125
ALL-WAVE RADIO RECEIVER

WITH ULTRA HIGH-FREQUENCY AND EXTENDED LONG-WAVE BANDS

SERVICE DATA

Physical Specifications

Model	A-125
Height	41¼ in.
Width	26 in.
Depth	13⅜ in.
Weight Packed	122 lbs.

Electrical Specifications

Rating Label	Power Supply (Volts)	Frequency (Cycles)	Power Consumption (Watts)
A	105–130	50–60	125
C	105–130	25–60	135
V	105–130 and 200–250	40–60	135

NOTE: Taps on universal transformers (Rating "V") are accessible by removing the cap cover on the top of the transformer. Schematic and wiring diagrams of the universal transformer are shown in Figs. 2 and 3 respectively.

Tuning Frequency Range

Band A	140–410 kc
Band B	540–1740 kc
Band C	1.74–5.8 mc (1740–5800 kc)
Band D	5.8–18.0 mc (5800–18,000 kc)
Band E	18.0–40.0 mc (18,000–40,000 kc)

Tuning Control Drive Ratio

Fast Tuning Drive Ratio 5½ to 1
Slow Tuning Drive Ratio 55 to 1
Precision Tuning Indicator Ratio 12 to 1

Tuning Meter

Shadow Type D.C. milliammeter—indicates R.F. amplifier plate current

Electrical Power Output

Undistorted	8.0 watts
Maximum	15.0 watts

Loudspeaker—Electrodynamic

Cone: 10¾ in. overall, 9¼ in. effective diameter
Cone coil impedance: 5 ohms at 400 cycles

Tubes

R.F. Amplifier	6K7 Triple-grid Super-control Amplifier
Converter	6L7 Converter Amplifier Hexode
Oscillator	6C8 Detector Amplifier Triode
I.F. Signal Amplifier	6K7 Triple-grid Super-control Amplifier
I.F. AVC Amplifier	6K7 Triple-grid Super-control Amplifier
Detector	6H6 Twin Diode
AVC Rectifier	6H6 Twin Diode
First Audio Amplifier	6F5 High-mu Triode
Second Audio Amplifier	6F6 Power Amplifier Pentode (Triode Connected)
Output (Push-pull Class A)	Two 6F6 Power Amplifier Pentodes (Class A)
Power Rectifier	5Z4 Full-wave Rectifier
Dial Lamps (Three)	Mazda No. 46

DESCRIPTION OF ELECTRICAL CIRCUIT

Model A-125 employs twelve metal envelope tubes in a superheterodyne circuit, giving the excellent sensitivity and selectivity inherent in this type circuit. Separate groups of coils are used for each frequency band, all radio frequency coils being housed in the "Sentry Box" unit, together with their associated band switches, capacitors, resistors, and tube sockets. This type of construction permits using extremely short connecting leads and isolates each radio frequency circuit in its own shielded compartment. Permanence of alignment adjustments is assured through use of the new sealed, air-dielectric "Permaliner" trimmer capacitors in all tuned circuits. Sturdy chassis construction, including a removable base shield, insures rigidity of parts and freedom from microphonic vibration.

The signal from the antenna is applied to the control grid of the 6K7 R.F. amplifier tube through the antenna coil, the secondary of which is tuned to the incoming signal by the rear section of the main tuning condenser. The secondaries of the antenna, R.F. and oscillator coils for the band next lower in frequency to the one in use are short-circuited by the band switch to prevent absorption of energy at their resonant frequencies, which fall in the next higher band. The primaries of all antenna and R.F. coils not in use are short-circuited by the band switch.

The amplified radio frequency signal is impressed upon the signal control grid of the 6L7 hexode converter tube through the R.F. coil, the secondary of which is tuned to the signal frequency by the center section of the main tuning condenser. The 6L7 hexode is a new type tube designed for improved superheterodyne conversion efficiency in conjunction with a separate oscillator tube. In the 6L7, two separate control grids are shielded from each other and each acts independently upon the electron stream. Coupling effects between the signal and oscillator control grids are very small, making possible high gain and stable oscillator outputs at high frequencies and effectively reducing interaction between tuned circuits in the receiver.

The superheterodyne oscillator signal is generated by the 6C5 oscillator tube, its frequency being maintained 465 kc above the incoming signal frequency by the front section of the main tuning condenser in conjunction with the oscillator coil and padding capacitors. The oscillator section of the main tuning condenser, although of the same capacity as the other two sections, is larger physically to permit wider spacing of the plates, thereby reducing the possibility of microphonic feedback howl. The oscillator output is coupled to the oscillator grid of the 6L7 tube, where it is combined with the signal frequency to produce the intermediate frequency of 465 kilocycles. This particular intermediate frequency is chosen to reduce image response and improve short-wave performance.

The converter I.F. (intermediate frequency) transformer, consisting of two tuned circuits, transfers the I.F. output from the converter tube to the control grids of the 6K7 signal I.F. amplifier tube and the 6K7 AVC (automatic volume control) I.F. amplifier tube. Separate I.F. channels are used for signal amplification and automatic volume control. The sensitivity of the receiver is controlled by a variable resistor in the cathode circuit of the 6K7 signal I.F. amplifier which varies the amplification in that circuit upon manipulation of the sensitivity control. By controlling sensitivity in the I.F. circuit, better signal-to-noise ratio is obtained at reduced sensitivity, and changing the setting of the sensitivity control does not affect the tuning meter, which is in the R.F. amplifier plate circuit.

The output from the signal I.F. amplifier tube is coupled to the 6H6 diode detector through the signal I.F. transformer. Both primary and secondary coils of this transformer are tuned and each coil is tapped for connection to its respective tube to reduce the load imposed on the tuned circuit and thereby improve selectivity and sensitivity.

In the 6H6 tube the signal is rectified, the audio frequency component producing a corresponding voltage drop across the R-42 section of the manual volume control. This is a dual control, the second or lo-note compensation section (R-21) acting with capacitors C-53 and C-32 and resistors R-40, R-44 and R-45 to preserve proper balance between high and low audio frequencies as the volume is changed. The manual volume control selects the amount of audio signal applied through coupling capacitor C-52 to the grid of the 6F5 first audio amplifier tube and thus controls the output of the receiver. The treble tone control, consisting of variable resistor R-23 in series with capacitor C-57, is connected from the 6F5 plate to chassis ground. Load resistor R-25 and blocking capacitor C-55 couple the 6F5 plate to the grid of the 6F6 second audio amplifier tube, the plate and screen grid of which are connected together externally for triode operation. The bass tone control circuit, consisting of variable resistor R-22, capacitor C-56, and reactor L-37, is connected between the second audio grid and chassis ground.

The second audio amplifier is coupled to the grids of the 6F6 push-pull output pentodes through a special resistance-capacity network utilizing the bridge principle to reduce residual hum to a minimum, and working into the primary of the push-pull audio input transformer. This transformer has a step-down ratio from primary to each half of the secondary, giving good regulation on signal peaks when power is delivered to the push-pull output pentode grids. The plate circuits of the output pentodes are suitably matched to the loud-speaker by means of a step-down push-pull output transformer.

Signal for automatic volume control is amplified by the 6K7 AVC I.F. amplifier tube, the plate circuit of which is connected to a tap on the primary coil of the AVC I.F. transformer. Both primary and secondary of this transformer are tuned, the 6H6 AVC rectifier being connected across the entire secondary. The selectivity of the AVC I.F. channel is slightly less than that of the signal I.F. channel. This is desirable to avoid distortion and overloading as stations are being tuned in. An initial negative voltage of about 11 volts, obtained from the cathode bias resistor of the second audio amplifier, is maintained on the plates of the AVC rectifier tube. This gives delayed AVC action, which prevents attenuation of weak signals and gives a flat AVC characteristic on strong signals. Through the use of dual-channel, delayed AVC, the output of the receiver will not vary more than a few per cent over variations in signal input of 100,000 to 1. The d-c drop across R-35 and R-36 due to the rectified signal supplies full automatic bias to the R.F. amplifier and converter tubes, while partial automatic bias, from R-36 only, is applied to the signal I.F. amplifier. The tuning meter is in the plate circuit of the R.F. amplifier tube and indicates the plate current of this tube, which reaches a minimum as a signal is tuned in when the automatic bias applied to the tube is maximum.

Plate and grid voltages for all tubes are supplied by the power supply system employing a 5Z4 full-wave rectifier, which with a suitable network of resistors and capacitors, supplies the required voltages and filtering action.

ALIGNMENT PROCEDURE

Alignment Frequencies

I.F.	Band "A"	Band "B"	Band "C"	Band "D"	Band "E
465 kc	400 kc 145 kc	1500 kc 580 kc	5230 kc	15,000 kc	36,000 kc

In order to align this receiver properly, it is necessary to have available the following test equipment:

1. A modulated test oscillator with the above alignment frequencies available. In case 36,000 kc (36 mc) is not directly available, the second harmonic of 18,000 kc usually will be found strong enough for alignment purposes. The test oscillator calibration points for all alignment frequencies should be checked at the time of using. A reliable check by the zero beat method may be obtained against known controlled frequencies such as broadcast station frequencies and their harmonics.
2. An output indicator, such as a high resistance a-c voltmeter with a maximum scale reading of 3 to 5 volts, or a neon lamp indicator.
3. An alignment tool consisting of an insulating shaft with a small screw-driver blade.
4. A tuning wand.

The location of all trimmer capacitors is shown in Fig. 5. *It should be noted that on "Permaliner" trimmer capacitors, used throughout this receiver, clockwise rotation of the adjusting screw decreases capacity, while counterclockwise rotation increases capacity.*

1. I.F. Alignment Adjustments

First, turn on the test oscillator and let it run at approximately 465 kc for a short time in order to reach a state of equilibrium and to reduce frequency drift to a minimum. The I.F. alignment adjustment is not easily made without oscillograph equipment. Moreover, the AVC channel alignment requires removal of the chassis from the cabinet and removal of the base shield. (Removal of the base shield does not, however, affect any of the circuits.) There is also the danger that the frequency of the test oscillator will be much farther from 465 kc than the receiver's I.F. peak, even after long service. Unless the test oscillator frequency can be given a precision check at the time of using, it is better not to shift the I.F. peak frequency of the receiver at all, unless bad alignment is definitely indicated.

Each of the three I.F. transformers has two air-dielectric "Permaliner" trimmer capacitors. The secondary of the converter I.F. transformer delivers signal to two separate I.F. channels, the signal channel and the AVC channel, which must be aligned independently.

Signal I.F. Channel

Set the frequency band switch of the receiver to Band "B." Short-circuit the antenna and ground terminals, tune the receiver to some point above 1500 kc so that no signal is heard, and ground the chassis.

Connect the test oscillator output between the connected grid clip of the 6L7 converter tube and the receiver chassis. Connect the output indicator across the cone coil of the loud-speaker. Turn on the receiver and set the volume and sensitivity controls to maximum (extreme clockwise position). Place the test oscillator in operation and adjust the test oscillator dial near 465 kc to give a response. Reduce the input from the test oscillator until only a slight output registers on the output indicator across the speaker cone coil. The input should be kept at such a low level that temporary removal of the 6H6 AVC rectifier tube makes no appreciable difference in output.

Before touching the receiver trimmers, adjust the *test oscillator* for maximum response. Then after an interval of a few minutes, check for oscillator drift and be sure of equilibrium. Note the exact final setting of the test oscillator dial so it may be duplicated if necessary. This setting is likely to be very close to 465 kc and should be used without touching the oscillator dial again for the I.F. adjustment following, unless bad misalignment is definitely evident; in this case the most accurate known test oscillator setting may be used.

Alignment adjustments should be made in the following sequence:

1. Signal I.F. Transformer.

Remove the test oscillator connection from the grid of the 6L7 tube and attach it to the connected grid clip of the 6K7 signal I.F. amplifier tube. Adjust each of the two signal I.F. trimmers in turn. There is some interaction between two trimmers of the same transformer, so that these alternate adjustments should be repeated several times until a maximum output is obtained. Do not touch these trimmers again.

2. AVC I.F. Transformer.

After alignment of the signal I.F. transformer is finished, remove the 6H6 detector tube, thereby rendering the signal channel inoperative. The AVC channel may temporarily be substituted for alignment purposes in the following way:

Remove the base pan shield. With a .02 mfd capacitor (Stock No. RC-046), connect the yellow wire from the AVC I.F. transformer to the corresponding signal I.F. transformer terminal from which a shielded lead goes to the volume control, where connection is most readily made. The AVC rectifier tube has delay bias voltage which should be temporarily removed by connecting its cathode to ground. Then adjust each of the two AVC I.F. trimmers alternately several times until a maximum output is obtained, which should be somewhat greater than that of the signal channel. The peak, however, being rather broad when properly trimmed, may be somewhat difficult to obtain. Do not touch the AVC I.F. trimmers again.

3. Converter I.F. Transformer.

After alignment of the signal I.F. transformer *and* the AVC I.F. transformer is finished, restore the test oscillator connection to the grid clip of the 6L7 converter tube and replace the 6H6 detector tube. Adjust each of the two converter I.F. trimmers alternately several times until a maximum output is obtained. Do not touch these trimmers again.

Restore all original connections and replace the base pan shield; this complete the I.F. alignment.

2. *R.F. "Sentry Box" Alignment Adjustments*

Bands "A" and "B" each require four trimmer adjustments, while Bands "C," "D," and "E" each require only three. Take care to adjust only the trimmers under test. Connect the test oscillator to the antenna and ground terminals and place the receiver in operation with the output indicator across the speaker cone coil. A standard "dummy antenna," for connection between the test oscillator and the receiver antenna terminal, is a capacitor of 250 mmfd. (Stock No. RC-258) in series with a resistor of 200 ohms; a condenser at least *must* be used, having some such small value of capacitance. Before any alignment the position of the pointer should be checked. This position should just be to the left of the extreme left-hand scale mark on the Band "B" scale for maximum capacitance position of the main tuning condenser (plates fully engaged). In cases where the pointer is seriously off calibration at 1000 kc after alignment, the pointer should be reset with a soldering iron to be accurate at that point. The entire "Sentry Box" alignment procedure should then be repeated.

The Oscillator, Converter Input, and Antenna Compartments of the Sentry Box are conveniently referred to as "OSC," "R.F." and "ANT," respectively, thereafter. Fig. 6 shows Sentry Box Coil Locations and Compartment Assemblies. Before making any adjustments, it is wise to determine the correctness of the existing alignment. This may be done by supplying a signal from the test oscillator to the receiver, *at the alignment frequencies only*, and inserting a "Tuning Wand" into the coil involved. The "Tuning Wand" consists of a rod of insulating material having a ring of non-magnetic metal attached to one end, and a small core of finely divided iron compacted into the opposite end. By inserting the metal ring into the center of a particular coil through the openings provided in the "Sentry Box" compartment shields, the inductance of that coil is lowered, increasing its resonant frequency. If the circuits are in exact alignment, inserting either end of the tuning wand in any coil will result in a decrease in output. When an increase in signal is obtained with the iron-filled end of the wand, a decrease in resonant frequency of that circuit by increasing its trimmer capacity is indicated. When an increase in signal is obtained with the metal ring, a decrease in trimmer capacity is indicated.

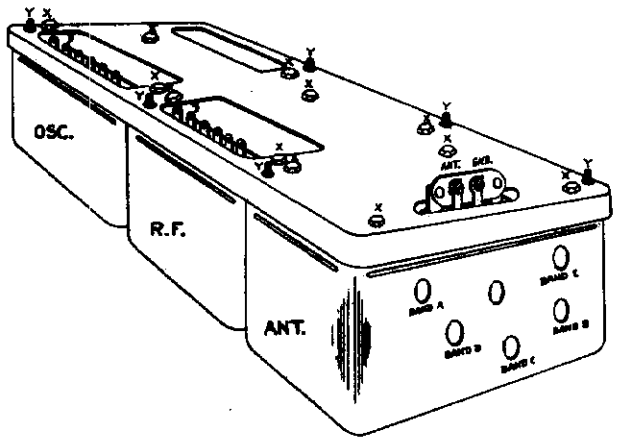

REAR VIEW OF SENTRY BOX

Fig. 6. "Sentry Box" Coil Locations and Assembly

Changes Indicated by Wand

Wand	Signal	Trimmer adjustment required
Metal Ring	Decrease	None
Iron Filings	Decrease	
Metal Ring	Increase	Decrease Capacity
Iron Filings	Decrease	
Metal Ring	Decrease	Increase Capacity
Iron Filings	Increase	

Band "A" (140-410 KC)

Set the band change switch to the position where the scale indicates the above range. This will be at the extreme counterclockwise position of the band change switch knob.

Tune the test oscillator to 400 kc, set the pointer at 400 kc on the receiver, and adjust the Band "A" OSC, R.F. and ANT trimmers for maximum output. If necessary, reduce input from the test oscillator so that the signal reaching the speaker is kept at a low or moderate level.

Next tune the oscillator to 145 kc. Keep slowly rocking the tuning knob through the point of resonance, at the same time adjusting the 145-kc padding trimmer, until the highest peak of output is secured.

"Noise" alignment may be substituted when the preceding adjustment is nearly finished, in cases where there is a steady output of very loud pickup noise at the lower end of the scale. With the pointer at 145 kc on the receiver and the test oscillator removed, simply adjust the 145-kc padding trimmer only until a peak in the noise output is obtained. This should result in the same trimmer setting as in the preceding paragraph.

The interaction between the trimmer adjustments at each end of the scale makes it necessary to repeat the adjustments alternately until both are correct. This may require two or three adjustments each. *The last adjustment* must always be made at the high frequency end of the scale. This completes the adjustment of this Band; do not touch these trimmers again.

Band "B" (540-1740 KC)

Set the band change switch to the position where the scale indicates the above range.

Tune the test oscillator to 1500 kc, set the pointer at 1500 kc on the receiver, and adjust the Band "B" OSC, R.F. and ANT trimmers for maximum output, reducing input to maintain a low or moderate signal.

Next tune the oscillator to 580 kc. Keep slowly rocking the tuning knob through the point of resonance, at the same time adjusting the Band "B" padding trimmer, until the highest peak of output is secured.

The interaction between the trimmer adjustments at each end of the scale makes it necessary to repeat the adjustments alternately until both are correct. This may require two or three adjustments each. *The last adjustments must always be made at the high frequency end of the scale.* This completes the adjustment of this Band; do not touch these trimmers again.

Band "C" (1.74-5.6 MC)

Set the band change switch to the position where the scale indicates the above range.

Tune the test oscillator to 5.22 mc, set the pointer at 5.22 mc on the receiver, and adjust the Band "C" OSC trimmer for maximum output, reducing input to maintain a low or moderate signal.

Check for the image signal which should be received at about 4.3 mc on the receiver dial. It may be necessary to increase the input to the receiver from the test oscillator for this check.

Retune the receiver to the correct scale reading (5.22 mc) to secure the previous response. Adjust the RF and ANT trimmers now also for maximum output. This completes the alignment of Band "C"; do not touch these trimmers again.

Band "D" (5.6-18 MC)

Set the band change switch to the position where the scale indicates the above range. This position should occasionally be readjusted during subsequent trimmer adjustment, since it is possible to get some signals through on the higher frequencies when the switch is not exactly in position.

Tune the test oscillator to 15 mc, set the pointer at 15 mc on the receiver, and adjust the OSC trimmer for maximum output, leaving it at the *first* peak obtained when increasing it from minimum capacitance by counterclockwise rotation.

Check for the image signal which should be received at about 14.1 mc on the receiver dial. It may be necessary to increase the input to the receiver from the test oscillator for this check.

Reduce the capacitance of the RF trimmer to minimum. Reset the main tuning knob to secure the previous response at 15 mc and, while slowly rocking the knob through this resonance point, increase the R.F. trimmer capacitance until a maximum response is obtained.

Carefully holding the main tuning knob on the peak of resonance at 15 mc, adjust the ANT trimmer for maximum output. This completes the alignment of Band "D"; do not touch these trimmers again.

Band "E" (18-40 MC)

Set the band change switch to the position where the scale indicates the above range. This position should occasionally be readjusted during subsequent trimmer adjustment, since it is possible to get some signals through on the higher frequencies when the switch is not exactly in position.

Tune the test oscillator to 36 mc, set the pointer at 36 mc on the receiver, and adjust the OSC trimmer for maximum output, leaving it at the *first* peak obtained when increasing it from minimum capacitance by counterclockwise rotation.

Check for the image signal which should be received at about 35.1 mc on the receiver dial. It may be necessary to increase the input to the receiver from the test oscillator for this check.

Reduce the capacitance of the R.F. trimmer to minimum. Reset the main tuning knob to secure the previous response at 36 mc and while slowly rocking the knob through this resonance point, increase the R.F. trimmer capacitance until a maximum response is obtained.

Carefully holding the main tuning knob on the peak of resonance at 36 mc, adjust the ANT trimmer for maximum output. This completes the alignment of Band "E"; do not touch these trimmers again.

©John F. Rider, Publisher

GENERAL ELECTRIC CO.

MODEL A-125
Visual Alignment
Dial Data
"Sentry Box" Test

VISUAL ALIGNMENT OF I.F.

In order to realize to full advantage the performance built into a receiver of this class at the factory, circuit alignment using cathode ray oscilloscope equipment is much to be preferred. The oscilloscopic method is particularly advantageous in aligning the I.F. tuned circuits.

For visual alignment it is necessary to vary the frequency of an unmodulated test oscillator signal over a range extending on both sides of the peak frequency. This variation must take place in synchronism with the horizontal traverse of the cathode ray beam on its screen. The frequency modulator must, therefore, provide means for synchronising the periodic test frequency variation with the cathode ray horizontal deflection circuit. The test oscillator may advantageously have facilities for audio frequency amplitude modulation of a fixed radio frequency test signal, as well as for frequency modulation, but audio modulation is not required for visual I.F. alignment.

Instead of an output meter across the speaker cone coil, the vertical plates of the cathode ray tube are connected across the load resistor of one of the diode rectifiers of the receiver. With the frequency modulator in operation in conjunction with the test oscillator, the resonance curve of the circuit under test will then be shown on the screen.

Preliminary Procedure

For visual alignment, adjust the receiver controls and connect the test oscillator as outlined in the section entitled "I.F. Alignment Adjustments" under "ALIGNMENT PROCEDURE." Connect the vertical deflecting plates of the cathode ray tube across the volume control (R-42) of the receiver. Place the oscilloscope in operation as an output indicator and proceed as outlined in the section entitled, "Signal I.F. Channel."

Alignment Adjustments

Adjust the oscilloscope so that the luminescent spot on the cathode ray screen traces a horizontal line across the screen. Now place the frequency modulator and test oscillator in operation to give an unmodulated radio frequency signal varying from one side to the other of 465 kc. Adjust the oscilloscope and test oscillator controls to show a single overall resonance curve of the signal I.F. channel on the cathode ray tube screen (Fig. 7A). Do not change the test oscillator setting thereafter.

To align the signal I.F. transformer, follow in sequence the same procedure outlined in the sections under "ALIGNMENT PROCEDURE" describing this operation. Instead of aligning for maximum output on an output indicator, the object should be to make the curve symmetrical. If the sweep circuit is so arranged that two symmetrically reversed curves appear on the screen, the curves should be made to coincide by adjusting the I.F. trimmer capacitors.

After alignment of the signal I.F. transformer is completed, remove the base pan shield. Remove the delay voltage temporarily from the AVC rectifier tube by connecting its cathode to ground. Disconnect the cathode ray vertical deflection plates from R-42 and connect between ground and the terminal to which the yellow lead from the AVC I.F. transformer is connected. Adjust each of the two AVC I.F. trimmers until a symmetrical, flat-topped curve similar to Fig. 7C is obtained.

Restore delay bias to the AVC rectifier by removing the connection from its cathode to ground, and again connect the cathode ray vertical deflection plates across R-42. Connect the test oscillator to the grid clip of the 6L7 converter tube. Adjust the converter I.F. trimmers for symmetrical, overlying curves as shown in Fig. 7A, with maximum height (sensitivity), and minimum width (selectivity). This completes the I.F. alignment.

Visual R.F. alignment may be carried out in the same general manner as above by applying a suitable frequency-modulated signal between the antenna and ground terminals of the receiver and connecting the cathode ray vertical deflecting plates across the receiver volume control.

ADJUSTMENT OF DIAL MECHANISM

The dial mechanism is rigidly mounted at one end to the tuning condenser frame by two removable screws, and anchored to the chassis deck at the other end by a rubber-cushioned nut. The dial pointer, station selector knob, and tuning condenser drive drum are interconnected by means of the drive cord and drive cable; the frequency band switch and cylindrical scale by the switch shaft and the scale gears. The precision tuning indicator assembly is mounted independently by two screws to the tuning condenser frame. The tuning meter is fastened to the dial mechanism mounting plate with two other screws.

1. *Position of Drum on Condenser Shaft*

With set screws (8) loosened and tuning condenser plates fully engaged, place the drum in the position shown in Fig. 8. The drum should be located on the tuning condenser shaft so as to be in line with the drive cord pulleys (1/16 in. from the dial mechanism mounting bracket) and so that, with condenser plates fully engaged, guide (60) occupies the position shown in Fig. 8.

2. *Removing and Replacing Scale*

Pry out fastener (40) and remove the scale by lowering the fastener end below the mounting ear. Take the scale out of cap assembly (29). Replace by placing tabs of caps (29) and (30) in slots of scale. Replace fastener (40).

3. *Removing and Replacing Band Switch Shaft*

To remove the band switch shaft with the "Sentry Box" assembled in place, the dial scale cap and gear must be removed. This is done by removing the cylindrical scale as in paragraph 2. Then loosen set screws (9) and remove cap (29), spring (7), and gear (8).

When replacing the switch shaft, note that the shaft will fit the switch gang slots in only one position; turn the shaft before inserting so that the locating button will pass through the keyed side of the slots. Note also that the brass bearing just behind the switch shaft gear determines the forward position of the gear. Insert the bushing just far enough into the index plate hub so that the shaft gear meshes snugly with the scale gear, then tighten the set screw.

4. *Locating Scale*

Loosen the two gear set screws (9). Rotate the scale backward until there is slight tension on spring (7) with the pointer indicating on the Band "A" scale. With the frequency band switch in the Band "A" position, place gear (8) in mesh with the gear on part (6) and tighten the two set screws (9).

5. *Replacing Drive Cord and Drive Cable*

The position of the dial scale pointer with respect to the tuning condenser drum is held fixed by a special metal braid cable (12) connecting the drum with guide (60). Tension is maintained on the cable through the drum spring (13) and drive cord (11). To replace either the drive cable or the drive cord, remove the dial scale for convenient access to guide (60). Unhook spring (13) from its drum tab to release tension. Unhook the cable or cord from guide (60) and unwind from the pulleys and drum. To replace the cable or cord, retrieve to agree with Fig. 8, and rehook drum spring (13) as shown.

6. *Replacing Reduction Drive*

To replace the reduction drive, unhook spring (18), loosening the drive cord. Unscrew nut (47) and remove drive. Replace with new drive and rehook drive cord.

7. *Setting Scale Pointer*

The scale pointer is soldered to the slider (50). To set the pointer mechanically, turn the tuning condenser rotor so that the plates are fully engaged, and solder the pointer to indicate a point 3/32 in. to the left of the extreme left-hand mark on the Band "B" scale.

8. *Replacing Dial Lamps*

The dial lamp sockets are easily accessible by lifting them clear of the dial mechanism. Lamps may then be replaced in their sockets. After replacing lamps, slide the socket clip back onto the mounting bracket. Be sure the sockets are quite clear of other metal parts. The tuning meter lamp is easily replaced by merely unscrewing it from its socket at the rear of the meter.

9. *Replacing Tuning Meter*

In case of damage to or defect within the tuning meter (24), the meter should be replaced rather than an attempt made to repair it. The meter is replaceable as a unit by removing its two mounting screws and unsoldering the meter leads and meter lamp leads.

10. *Precision Tuning Indicator*

The precision tuning indicator dial and gear assembly is illustrated at the left of Fig. 8. This assembly is removable as a unit by removing the two mounting screws which fasten its bracket (14) to the tuning condenser frame. The dial and pinion assembly (30) is held on its shaft by a small horseshoe spring washer which should be pried off to replace this assembly. The drive gear (17) and backlash gear (36) may be removed by loosening the set screws on collars (44) and (45), which hold them in place.

When replacing the complete precision tuning assembly, the tuning condenser plates should be fully disengaged. Refasten the assembly to the tuning condenser frame, but before tightening the mounting screws, and before meshing the drum gear sector with the precision dial drive gear, place an initial tension on the backlash spring (16) by rotating the precision dial about two revolutions clockwise from the position in which the spring holds it when unwound. Maintaining this tension on the backlash spring, mesh the gears and tighten the mounting bolts with the precision dial indicating zero when the horizontal dial pointer indicates the extreme right-hand scale mark on the Band "D" scale.

11. *Electrical Connection of Tuning Mechanism to Chassis*

This is effected by a short length of tinned copper braid with two washer connection lugs. These should be securely screwed down.

METHOD OF SERVICE PROCEDURE—SENTRY BOX

The "Sentry Box" assembly includes the tuning condenser and dial mechanism as well as the coil and switch compartments. The complete unit may be dismounted from the chassis by removing the side-fastening bolts, unscrewing the dial mechanism anchoring nut and unsoldering the leads to the chassis from the terminal strips.

In order to remove the compartment shield cans it is necessary to take out the frequency band switch shaft. With the "Sentry Box" dismounted from the chassis the dial gears may be disengaged and the switch shaft removed merely by lifting the reduction drive end of the dial assembly, allowing the switch shaft gear to pass the dial scale cap shaft. With the "Sentry Box" mounted in place, removal of the switch shaft requires removing the dial scale gear and cap shaft as outlined in the section covering "Adjustment of Dial Mechanism."

Each compartment shield can houses a bracket assembly comprising the coils, band switch and other component parts associated with that particular circuit. With the band switch shaft out, any shield may be easily removed by unscrewing the two mounting stud nuts ("Y", Fig. 6).

In most cases, coils or Permaliner trimmer capacitors may be replaced merely by removing their particular shield can. It is an easy matter, however, to remove each complete bracket assembly by taking out the mounting screws ("X", Fig. 6) and unsoldering the bus or braid connections to the tuning condenser. In the case of the R.F. or oscillator units it will also be necessary to unsolder the external leads to the respective terminal boards of these units.

Permaliner trimmers are replaced by unsoldering the bus lead from the trimmer terminal, and then unsoldering the Permaliner case from its mounting cup. The latter operation may require the use of two soldering irons.

Coils are replaceable by merely unsoldering the coil lugs from the switch lugs. If it is necessary to replace a section of the band switch, however, it will be found expedient to remove the complete bracket and coil assembly for easy access to the switch lugs.

Fig. 7A
(Overall Signal I.F.)

Fig. 7B
(Signal I.F.)

Fig. 7C
(AVC I.F.)

Curves taken with RCA Oscillograph Type TMV-122-B

©John F. Rider, Publisher

©John F. Rider, Publisher

PRICES SUBJECT TO CHANGE WITHOUT NOTICE

MODEL A-125

REPLACEMENT PARTS

RECEIVER CHASSIS ASSEMBLY

Stock No.	Description	List Price
RB-007	BOARD—Fuse Board, Rating "V" Receivers	$0.40
RB-008	BOARD—Terminal Board (Double Terminal)	.10
RB-011	BOARD—Fuse Board, Rating "A" or "C" Receivers	.30
RB-013	BOARD—Terminal Board (Ground and Free Terminal)	.10
RB-018	BOARD—Terminal Board (Single Twin Terminal)	.10
RB-019	BOARD—Terminal Board (Three Terminals)	.10
RB-120	BRACKET—Dial Mechanism Mounting Bracket	.15
RC-011	CAPACITOR—.002 Mfd. 600 Volt (C-51, C-53) Paper Dielectric	.25
RC-013	CAPACITOR—.002 Mfd. 200 Volt (C-82) Paper Dielectric	.25
RC-021	CAPACITOR—.004 Mfd. 400 Volt (C-59, C-60) Paper Dielectric	.25
RC-022	CAPACITOR—.005 Mfd. 600 Volt (C-52) Paper Dielectric	.25
RC-034	CAPACITOR—.01 Mfd. 200 Volt (C-59) Paper Dielectric	.25
RC-072	CAPACITOR—.05 Mfd. 200 Volt (C-45, C-47, C-53, C-56, C-64, C-65, C-69) Paper Dielectric	.25
RC-080	CAPACITOR—.02 Mfd. 400 Volt (C-57) Paper Dielectric	.25
RC-083	CAPACITOR—.03 Mfd. 400 Volt (C-55) Paper Dielectric	.25
RC-136	CAPACITOR—.25 Mfd. 200 Volt (C-80) Paper Dielectric	.30
RC-158	CAPACITOR—.5 Mfd. 200 Volt (C-79) Paper Dielectric	.40
RC-406	CAPACITOR—16 Mfd. 480 Volt (C-75) Wet Electrolytic	1.25
RC-412	CAPACITOR—30 Mfd. 390 Volt (C-73) Wet Electrolytic	1.20
RC-509	CAPACITOR—One 4 Mfd. 250 Volt (C-72); one 4 Mfd. 50 Volt (C-58); one 10 Mfd. 25 Volt (C-54) Dry Electrolytic Pack	1.55
RC-510	CAPACITOR—10 Mfd. 50 Volt (C-74) Dry Electrolytic	.85
RC-518	CAPACITOR—4 Mfd. 250 Volt (C-63) Dry Electrolytic	.90
RC-750	CAPACITOR—Line Capacitor, Two .01 Mfd. (C-77, C-81)	.50
RC-803	CABLE—Speaker Cable	.55
RC-851	CORD—Power Cord with Plug	.60
RC-960	CLAMP—Speaker Cable Clamp	.10
RC-964	CLIP—6F6 Grid Lead Anchoring Clip, Pkg. of 10	$0.20
RE-004	ESCUTCHEON—Dial Escutcheon	1.25
RG-001	GRID CAP—Grid Connection Cap, Pkg. of 5	.10
RI-003	INSULATOR—Escutcheon Shaft Insulator Bushing, Pkg. of 10	.40
RK-002	KNOB—Tuning, Volume, Tone, Sensitivity or Band Switch Knob, Pkg. of 5	.5[illegible]
RL-300	COIL—Bass Tone Control Choke Coil (L-37)	1.15
RL-900	LEAD—6F6 Shielded Grid Lead	.20
RN-001	NUT—Escutcheon Mounting Nut, Pkg. of 10	.45
RP-002	PLATE—Fuse Cover Plate	.15
RP-014	PLATE—Escutcheon Mounting Plate, Pkg. of 2	.25
RR-007	RESISTOR—350 ohms, ¼ watt (R-16, R-30) Carbon Resistor, Pkg. of 5	.70
RR-013	RESISTOR—2000 ohms, ¼ watt (R-24) Carbon Resistor, Pkg. of 5	.70
RR-015	RESISTOR—5000 ohms, ¼ watt (R-15, R-29) Carbon Resistor, Pkg. of 5	.70
RR-021	RESISTOR—10,000 ohms, ¼ watt (R-40) Carbon Resistor, Pkg. of 5	.70
RR-023	RESISTOR—3500 ohms, ¼ watt (R-45) Carbon Resistor, Pkg. of 5	.70
RR-035	RESISTOR—50,000 ohms, ¼ watt (R-44) Carbon Resistor, Pkg. of 5	.70
RR-049	RESISTOR—100,000 ohms, ¼ watt (R-25, R-32) Carbon Resistor, Pkg. of 5	.70
RR-063	RESISTOR—250,000 ohms, ¼ watt (R-26) Carbon Resistor, Pkg. of 5	.70
RR-068	RESISTOR—2 megohms, ¼ watt (R-20, R-34) Carbon Resistor, Pkg. of 5	.6[illegible]
RR-138	RESISTOR—1 megohm, ¼ watt (R-35) Carbon Resistor, Pkg. of 5	.70
RR-157	RESISTOR—1000 ohms, ½ watt (R-27, R-37) Carbon Resistor, Pkg. of 5	.70
RR-242	RESISTOR—30,000 ohms, 1 watt (R-28) Carbon Resistor, Pkg. of 5	.85
RR-606	RESISTOR—300 ohms, 5 watts (R-39) Vitreous Enamel Wire-wound Resistor	.30
RR-630	RESISTOR—10,000 ohms, 5 watts (R-26) Vitreous Enamel Wire-wound Resistor	.45
RR-702	RESISTOR—Tapped Resistor (R-38, R-42)	1.25
RR-900	REFLECTOR—Dial Lamp Reflector	.15
RS-109	SHIELD—Converter I.F. Transformer Coil Shield	.20
RS-110	SHIELD—Signal or AVC I.F. Transformer Coil Shield	.2[illegible]
RS-158	SHIELD—Base Shield with Mounting Feet	1.5[illegible]
RS-200	SOCKET—Eight-pin Tube Socket, Pkg. of 5	$0.75
RS-204	SOCKET—Five-pin Tube Socket, Pkg. of 5	.75
RS-801	SENSITIVITY CONTROL—Rheostat 2200 ohms (R-17)	.75
RT-131	TRANSFORMER—Power Transformer (T-8) 50-60 cycles, 105-120 Volts (Rating "A")	7.50
RT-132	TRANSFORMER—Power Transformer (T-3) 25-60 cycles, 105-120 Volts (Rating "C")	10.50
RT-133	TRANSFORMER—Universal Power Transformer (T-5) 40-60 cycles, 105-120, 200-250 Volts (Rating "V")	9.00
RT-206	TRANSFORMER—AVC I.F. Transformer (C-66, C-67, C-68, C-70, C-71, L-35, L-36, R-31, R-33)	2.95
RT-207	TRANSFORMER—Signal I.F. Transformer (C-46, C-48, C-49, C-50, C-51, L-33, L-34, R-18, R-19)	3.10
RT-208	TRANSFORMER—Converter I.F. Transformer (C-39, C-40, C-41, C-42, C-43, C-44, L-31, L-32, R-12, R-13, R-14)	3.30
RT-501	TRANSFORMER—Interstage Audio Transformer (T-1)	2.95
RT-702	TONE CONTROL—Bass Tone Control, Potentiometer 250,000 ohms (R-22)	.95
RT-703	TONE CONTROL—Treble Tone Control, Potentiometer 250,000 ohms (R-23) and Power Switch (S-7)	1.10
RV-004	VOLUME CONTROL—Potentiometer, 250,000 ohms (R-42) and Rheostat 1,500,000 ohms (R-21)	1.20
RW-002	WINDOW—Dial Window	.15
RX-004	SCREW ASSEMBLY—Chassis Mounting Screws and Washers	.10

"SENTRY BOX" ASSEMBLY

RA-002	ASSEMBLY—Antenna Compartment Assembly Complete	10.25
RA-102	ASSEMBLY—R.F. Compartment Assembly Complete	13.75
RA-202	ASSEMBLY—Oscillator Compartment Assembly Complete	16.80
RB-010	BOARD—R.F. or Oscillator Compartment Terminal Board	.10
RB-012	BOARD—Antenna Terminal Board	.15
RB-102	BRACKET—Antenna Bracket Assembly	.75
RB-105	BRACKET—R.F. Bracket Assembly	.95
RB-112	BRACKET—Oscillator Bracket Assembly	1.25
RC-046	CAPACITOR—.02 Mfd. 200 Volt (C-24) Paper Dielectric	.25
RC-072	CAPACITOR—.05 Mfd. 200 Volt (C-8, C-8, C-11, C-16, C-19, C-22, C-25) Paper Dielectric	.25
RC-091	CAPACITOR—.06 Mfd. 400 Volt (C-12) Paper Dielectric	.30
RC-202	CAPACITOR—4 mmfd. (C-5, C-21, C-76, C-78) Mica Dielectric Moulded Case	.25
RC-204	CAPACITOR—15 mmfd. (C-76) Mica Dielectric Moulded Case	.25
RC-207	CAPACITOR—25 mmfd. (C-7) Mica Dielectric Moulded Case	.25
RC-209	CAPACITOR—40 mmfd. (C-28) Mica Dielectric Moulded Case	.25
RC-210	CAPACITOR—50 mmfd. (C-14, C-20) Mica Dielectric Moulded Case	.25
RC-275	CAPACITOR—335 mmfd. (C-32) Mica Dielectric Moulded Case	.30
RC-344	CAPACITOR—1300 mmfd. (C-33) Mica Dielectric Moulded Case	.35
RC-356	CAPACITOR—2500 mmfd. (C-36) Mica Dielectric Moulded Case	.50
RC-502	CAPACITOR—Permaliner Trimmer Capacitor 10-45 mmfd. (C-10, C-23, C-26, C-27, C-30)	.50
RC-503	CAPACITOR—Permaliner Trimmer Capacitor 5-25 mmfd. (C-1, C-2, C-6, C-9, C-13, C-15, C-18, C-31, C-35)	.50
RC-506	CAPACITOR—Permaliner Trimmer Capacitor 3-12 mmfd. (C-20, C-37, C-38)	.50
RC-702	CONDENSER—Three-gang Tuning Condenser (C-4, C-17, C-24)	4.25
RC-953	CUP—Permaliner Trimmer Capacitor Mounting Cup	.10
RG-001	GRID CAP—Grid Connection Cap, Pkg. of 5	.10
RG-100	GUARD—Terminal Strip Guard	.15
RI-002	INDEXING PLATE—Frequency Band Switch Indexing Plate	.80
RL-003	COIL—Antenna Coil, Band A (L-1, L-2)	$1.00
RL-004	COIL—Antenna Coil, Band B (L-3, L-4)	.70
RL-007	COIL—Antenna or R.F. Coil, Band E (L-9, L-10, L-19, L-20)	.55
RL-009	COIL—Antenna Coil, Band C (L-5, L-6)	.70
RL-011	COIL—Antenna Coil, Band D (L-7, L-8)	.85
RL-103	COIL—R.F. Coil, Band A (L-11, L-12)	1.60
RL-104	COIL—R.F. Coil, Band B (L-13, L-14)	.85
RL-110	COIL—R.F. Coil, Band C (L-15, L-16)	.75
RL-112	COIL—R.F. Coil, Band D (L-17, L-18)	.70
RL-203	COIL—Oscillator Coil, Band E (L-29, L-30)	.55
RL-206	COIL—Oscillator Coil, Band B (L-23, L-24)	.85
RL-207	COIL—Oscillator Coil, Band A (L-21, L-22)	.70
RL-212	COIL—Oscillator Coil, Band D (L-27, L-28)	.70
RL-211	COIL—Oscillator Coil, Band C (L-25, L-26)	.75
RR-007	RESISTOR—350 ohms, ¼ watt (R-2, R-6) Carbon Resistor, Pkg. of 5	.70
RR-015	RESISTOR—5000 ohms, ¼ watt (R-1, R-5) Carbon Resistor, Pkg. of 5	.70
RR-041	RESISTOR—75,000 ohms, ¼ watt (R-4, R-11) Carbon Resistor, Pkg. of 5	.70
RR-049	RESISTOR—100,000 ohms, ¼ watt (R-7) Carbon Resistor, Pkg. of 5	.70
RR-064	RESISTOR—500,000 ohms, ¼ watt (R-3, R-8) Carbon Resistor, Pkg. of 5	.60
RR-163	RESISTOR—2000 ohms, ½ watt (R-9, R-10) Carbon Resistor, Pkg. of 5	.70
RR-304	RESISTOR—0.8 ohm, ¼ watt (R-41) Flexible Resistor, Pkg. of 5	.70
RS-106	SHIELD—Oscillator Compartment Shield Can	.90
RS-107	SHIELD—R.F. Compartment Shield Can	.90
RS-108	SHIELD—Antenna Compartment Shield Can	.90
RS-200	SOCKET—Eight-pin Tube Socket, Pkg. of 5	.75
RS-303	SWITCH—Antenna or R.F. Band Switch (S-1, S-2, S-3, S-4)	1.20
RS-306	SWITCH—Oscillator Band Switch (S-5, S-6)	1.20
RX-002	CUSHION ASSEMBLY—Tuning Condenser Mounting Cushions, Nuts and Washers	.10

DIAL MECHANISM ASSEMBLY (See Fig. 8)

RB-108	BRACKET—Dial Lamp Bracket	.55
RB-114	BRACKET—Precision Tuning Indicator Bracket (14)	.15
RB-115	BRACKET—Mounting Bracket Assembly	.50
RC-802	CABLE—Metal Braid Dial Cable (12), Pkg. of 5	.55
RC-856	CORD—Dial Cord (11), Pkg. of 5	.65
RC-954	CAP—Scale Cap Assembly, Gear End (39)	.10
RC-955	CAP—Scale Cap Drive End (30)	.10
RC-961	CLAMP—Dial Pointer Stop Clamp	.20
RC-962	COLLAR—Precision Dial Shaft Collar, External (44)	.15
RC-963	COLLAR—Precision Dial Shaft Collar, Internal (45)	.15
RD-004	DIAL MECHANISM—Dial Mechanism complete	8.75
RD-006	DRIVE—Differential Reduction Drive	1.00
RD-009	DRUM—Tuning Condenser Drive Drum and Gear Assembly	.45
RD-010	DIAL—Precision Dial Assembly (20)	.60
RD-017	DIAL—Cylindrical Dial Scale	.75
RF-200	FASTENER—Dial Fastener (40), Pkg. of 10	.10
RG-002	GEAR—Dial Gear and Set Screws (29)	.15
RG-003	GEAR—Precision Dial Drive Gear (17)	.15
RG-004	GEAR—Precision Dial Backlash Gear (26)	.15
RG-200	GUIDE—Dial Pointer Guide (50), Pkg. of 5	.15
RM-001	METER—Tuning Meter (24)	3.50
RP-003	POINTER—Dial Pointer, Pkg. of 2	.15
RS-401	SPRING—Drum Spring (13), Pkg. of 2	.20
RS-402	SPRING—Precision Dial Backlash Spring (16)	.15
RS-403	SPRING—Dial Scale Spring (7), Pkg. of 2	.10
RS-500	STUD—Precision Dial Gear Stud	.20

SPEAKER ASSEMBLY

RB-008	BOARD—Cone Coil Lead Anchoring Terminal Board	.10
RC-903	CONE—Speaker Cone and Cone Coil (L-39)	1.50
RP-012	PLUG—Speaker Female Plug Connector	.20
RP-015	PLUG—Speaker Male Plug Connector	.20
RR-800	RING—Speaker Cone Clamping Ring, Pkg. of 4 segments	.30
RS-005	SPEAKER—10 ¼-in. Loud-speaker Complete with Output Transformer (L-38, L-39, L-40)	13.50
RT-407	TRANSFORMER—Output Transformer (T-2)	2.75

©John F. Rider, Publisher

"Double-Doublet" Antenna System (No. 9500-A)

for

"All-Wave" Radio Receivers

Description of System

With the advent of "all-wave" radio receivers, the antenna installation became a fundamental rather than incidental problem. Short waves are used primarily because of their ability to travel great distances with relatively low transmitting power. Upon reaching the receiver, therefore, these waves are in general far weaker and fade much more severely than those from stations in the standard broadcast band (540 to 1500 kilocycles). Obviously, the antenna must perform very efficiently in the short-wave spectrum; it must be able to transfer signals to the receiver with negligible loss or *reliable* results will be practically impossible.

Short-wave broadcasting covers a very wide frequency range, being segregated by international agreement into four principal narrow bands located approximately at 19, 25, 31 and 49 meters. For any given length, an antenna will favor certain frequencies and tend to reject others. Antennas of the conventional single-wire type, therefore, are quite unsatisfactory for there is no one length which would operate with any degree of uniformity over the required range. The *double-doublet* antenna system, however, serves the purpose admirably.

As its name implies, this system incorporates two distinct *doublet-type* antennas. The doublets are of different lengths, being tuned to opposite ends of the short-wave broadcast range, and cross-connected so that each compensates for weak points of the other at various intervening frequencies. Signals intercepted by the doublets are fed to the receiver through a balanced, twisted-pair lead-in (hereinafter called the transmission line) and a specially-constructed receiver-coupling transformer. The length of the transmission line and coupling ratio of the transformer are correct to afford proper *electrical matching* for greatest energy transfer.

While natural static is almost negligible in the short-wave spectrum, "man-made" interference is often very severe. Such interference usually is of local origin radiated by the house-wiring or by external electrical apparatus including even the ignition systems of passing automobiles. It is "picked up" mainly by the antenna lead-in and so little or nothing can be done with ordinary types of antennas to prevent annoyance from that source. Doublet antennas, however, are particularly advantageous from a standpoint of noise reduction since the transmission line does not form an active part of the system but serves merely to transfer signals from the doublets to the receiver. In this *double-doublet* system, complete rejection of signals "picked up" along that length is achieved by means of a special shield in the receiver-coupling transformer.

There is yet another consideration involved. With an all-wave receiver, the antenna must not sacrifice performance in the standard broadcast and other low-frequency bands in order to obtain good short-wave reception. At frequencies below 6000 kilocycles, therefore, this antenna system is converted from its *double-doublet* form to one approximating the conventional "T-type" arrangement so that the transmission line acts as part of the effective length. This change-over is performed automatically by an electrical filter circuit built integral with the receiver-coupling transformer.

Installation

Although the design of this *double-doublet* antenna system may appear complicated, the installation is actually very simple. As shown by the main illustration (Figure 1), two fundamental arrangements are possible—that is, either horizontal or vertical suspension. The former is most common and perhaps preferable in that when so arranged, the system exhibits a better signal-to-noise ratio and is highly directional to local pickup. Because of this directional property, the doublets will intercept less and less interference as they are rotated toward a position where the span points toward the source of that interference. The vertical arrangement exhibits no directional effect, but often is advantageous when installation space is restricted.

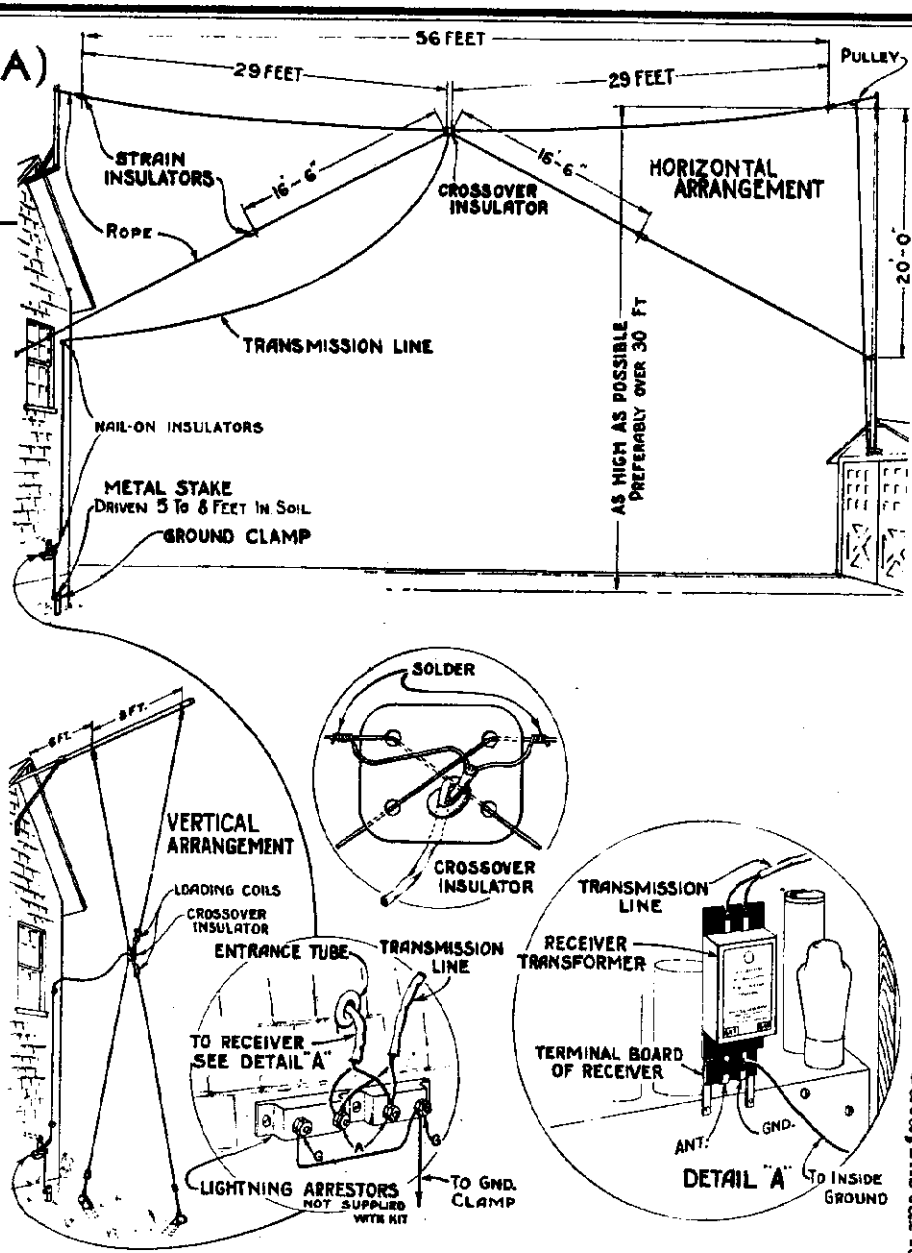

Figure 1—Plan of Installation

Space Requirements

In its horizontal arrangement, the entire antenna system preferably should lie in one vertical plane as illustrated. This of course requires a straightaway span of approximately 56 feet since the halves of that doublet suspended between the uppermost points of support are each 29 feet long. If sufficient ground space for this purpose is not available, the overall span can be shortened to approximately 30 feet through the use of *loading coils*, as shown in Figure 2. By inserting one coil in each half of the higher doublet, its lengths can be made equal to those of the angular doublet (16½ feet), but the original tuning characteristics of the system will be retained. Loading coils are standard accessories procurable through your dealer.

Obviously, ground space also can be conserved by erecting the antenna so that the halves constitute the sides of a "V." Although this arrangement may eliminate the use of loading coils, it is not as satisfactory in performance and necessitates a third support for the system—that is, at the center. With loading coils, the system suffers a slight loss in efficiency only in the region of 31 meters, whereas the "V"-arrangement exhibits a uniform loss throughout the entire short-wave spectrum. This loss becomes larger as the internal angle of the "V" is decreased, reaching approximately 30 per cent at an angle of 90 degrees. An angle of less than 90 degrees should be avoided.

If ground space is very limited, the vertical form of suspension may be desirable. From a practical standpoint, it is improbable that the full antenna span of 56 feet could be employed except in rare cases. By using loading coils, however, the installation should be fairly simple.

Interference Considerations

Short-wave reception is believed by many to be inherently noisy. This assumption is incorrect since static from natural or atmospheric disturbances is much less severe on the short waves than in the standard broadcast band. Noise on these wavelengths is practically always of local origin and can be eliminated or at least greatly reduced with this *double-doublet* antenna system. To obtain the most benefit from its noise-reducing properties, however, the system should be installed with some forethought.

Interference "picked up" by the transmission line cannot affect the receiver. The doublets, therefore, should be erected well remote from sources of interference such as automobile highways, street-railway lines or motor-driven electrical appliances. In some cases, it may be necessary to locate the antenna proper as much as 500 feet distant from the receiver, adding one or more lengths of transmission line as required to the original length. To maintain the correct *electrical matching*, any excess length of transmission line should not be removed unless two or more full lengths have been added. If the required length is less than one or two full lengths, the excess amount should be coiled up neatly at the end nearest the receiver. As this line has a definite known impedance, do not use any random twisted-pair lamp cord for additional length; use only the genuine transmission line sold by your dealer.

Advantage also should be taken of the directional effect of the horizontal arrangement wherever possible. Least interference will be intercepted by the doublets when the span points toward the source of disturbance. This resource will be particularly helpful when the antenna cannot be removed from the field of influence, as in cases where a radio transmitter (such as an amateur station) is operating in the neighborhood.

Set-Up Procedure

Before attempting to set up this *double-doublet* antenna system, the intended plan of assembly should be well understood. First, examine the contents of the kit, referring to the following tabulation and to Figure 1.

Equipment—The following parts are supplied with the kit:

2 Rolls stranded antenna wire (each 46½ feet long).
1 Roll transmission line (80 feet long).
1 Receiver-coupling transformer.
2 Links (for coupling transformer).
1 Crossover insulator.
4 Strain insulators.
2 Nail-on insulators.
1 Entrance-tube insulator.
1 Ground clamp.

Assembly—The two doublet antennas which comprise this system are formed by the two rolls of stranded antenna wire. At the central (crossover) insulator, these wires are crossed to obtain four sections, two for one doublet each 29 feet long and two for the other doublet each 16½ feet long. An extra length of six inches is allowed at each end of the continuous wires for connection to the strain insulator, both (as noted in the preceding paragraph) being 46½ feet long. In threading these wires through the crossover insulator, be careful to have the cross occur on opposite sides of the insulator.

The transmission line is connected to the antenna wires at the junctions of the 29-foot and 16½-foot sections as shown by the enlarged view of the crossover insulator in Figure 1. A tinned spot has been placed on each roll of wire to denote the intended points of connection. When loading coils are employed, connect those coils and the transmission line in accordance with Figure 2. Use only rosin core solder for joints. Finally, attach the strain insulators and suspension ropes, then hang the system as a unit between the masts or intended points of support.

In the horizontal arrangement, it is important to avoid excessive tension in the wires of the higher doublet as breakage may occur. These wires *must not be stretched tightly* but should be allowed to sag so that the crossover insulator is from six to seven feet below the level of the strain insulators. The amount of sag obviously will be governed by the horizontal distance between the strain insulators and will be correct when the latter distance is adjusted to approximately 56 feet (30 feet if loading coils are employed). As an additional safeguard, some slack also should be left in the wires of the lower or angular doublet.

Connection to Receiver—The opposite end of the transmission line is brought to the receiver, using the nail-on insulators and entrance-tube insulator at points best suited to the installation. If lightning arrestors are desirable or required by local ordinance, two (low-capacity) units should be installed as shown in Figure 1. Simply remove a small strip of insulation from the transmission line conductors at the lightning arrestors, connect the bared portions one to each "antenna" terminal and continue on without cutting the transmission line. The ground terminals of the lightning arrestors are made common and connected (by means of the ground clamp furnished) to a metal stake or pipe driven five to eight feet into the soil.

Fasten the receiver-coupling transformer to the "ANT-GND" terminal board on the receiver chassis, using the two links supplied with the kit. Make certain to install the transformer correctly; the links should be attached to those terminals identified as "ANT" and "GND" at bottom of label on metal cover and the label should face outward from rear of receiver. Connect the end of the transmission line to the two terminals at top of transformer, leaving any additional length coiled up behind receiver. Finally, attach a wire from the "GND" link to a water-pipe in the basement or to the external metal stake if employed. The latter connection should be as short as possible and preferably made with No. 14 or larger, rubber-covered, stranded copper wire.

In receivers having no "ANT-GND" terminal board, fasten the coupling transformer to the cabinet as near as possible to the chassis. To insure most noise elimination, the connection from the "GND" terminal of the transformer should be made directly to the chassis metal with a wire no longer than one inch. The connection from the "ANT" terminal to the radio-frequency input circuit of the receiver also should be no longer than necessary, but it is more important to avoid close proximity of this wire to dome (grid) clips of the radio tubes.

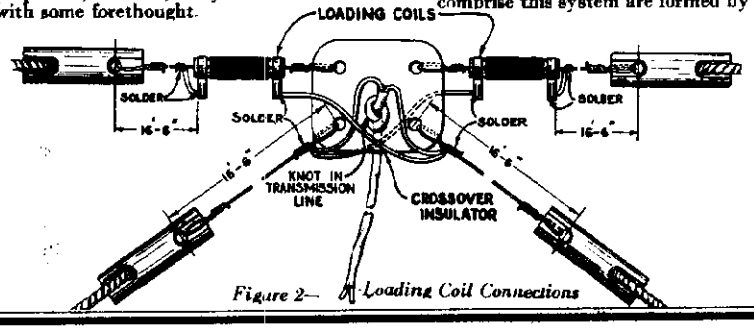

Figure 2— Loading Coil Connections

Replacement Parts

Stock No.	DESCRIPTION	List Price	Stock No.	DESCRIPTION	List Price
4326	Wire (antenna wire consisting of two rolls, each roll 46½ feet long)	$1.16	4759	Transmission line (special lead-in cable—240 feet long)	$10.44
4327	Insulator (antenna crossover insulator)—For replacement purposes only; item to be replaced must be returned with order.	.10	4743	Transformer (receiver-coupling transformer)—For replacement purposes only; item to be replaced must be returned with order	2.95
4738	Transmission line (special lead-in cable—80 feet long)	3.48	4753	Link—Connection link—Connects receiver coupling transformer to "Ant-Gnd" terminal board on receiver chassis—Package of 10	.10
4744	Transmission line (special lead-in cable—160 feet long)	6.94	6958	Coils—Doublet loading coils—One pair	.60

Installation Service

Although this *double-doublet* antenna system is not difficult to install, many persons nevertheless prefer to have it erected by an experienced radio serviceman. Such a procedure often is necessary because of physical infirmities, lack of time and various other reasons. Upon request, your dealer or service engineer will make the complete installation at a nominal charge.

GENERAL HOUSEHOLD UTILITIES CO.

MODELS 450,451
Chassis 4A, Revised
Schematic, Socket
Trimmers, Voltage
Resistance, Parts

MODELS 460,461,460X,461X
Chassis 4B,4BX,Revised
Schematic,Socket,Trimmers
Chassis,Voltage,Resistance
Parts List

GENERAL HOUSEHOLD UTILITIES CO.

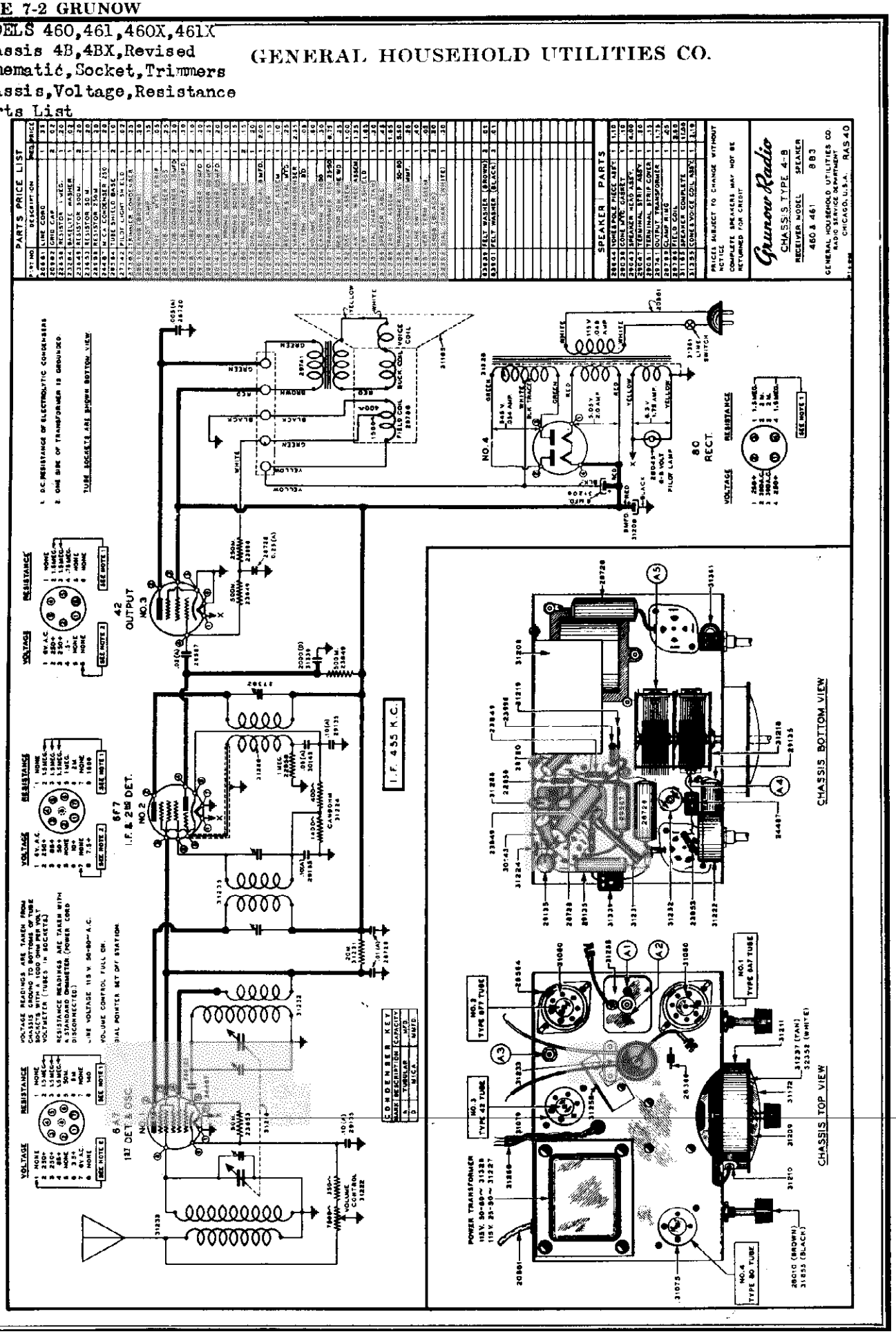

MODEL 470

GENERAL HOUSEHOLD UTILITIES CO. Chassis 40, Revised Schematic, Socket Trimmers, Chassis, Parts

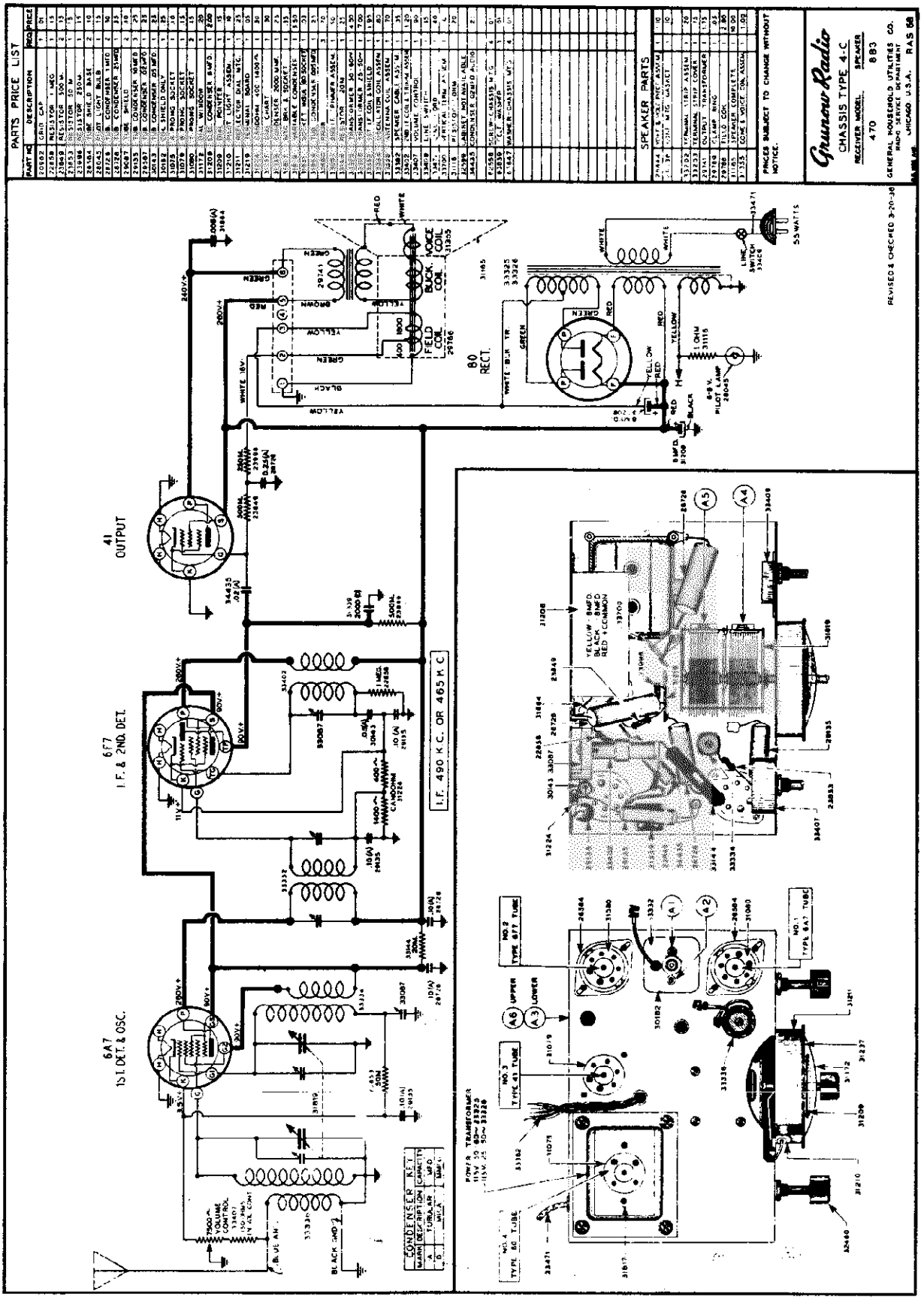

MODELS 580,581
Chassis 5G,Revised
Socket,Trimmers
Parts List,Notes

GENERAL HOUSEHOLD UTILITIES CO.

PARTS AND PRICE LIST

MODELS 580—581
CHASSIS 5G—56X—56Z

Part No.	Description	No. Used	Price $
20962	Grid Cap	3	.01
23167	20 M Ohms ½ Watt Resistor	1	.20
23538	Resistor 200 M Ohm ½ Watt	2	.15
23649	Resistor 500 M Ohm ½ Watt	1	.15
23850	Resistor 16 M Ohm 1 Watt	2	.20
23853	Resistor 50 M Ohm ½ Watt	2	.15
24487	250 MMF Condenser	1	.20
27422	Insulating Washer	2	.02
27784	Resistor 400 Ohm ½ Watt	2	.15
27831	Pilot Light Socket	2	.10
28045	Pilot Lamp	2	.15
28438	Pointer Screw	2	.02
28717	Condenser .002 Mfd. 700 V Tubular	1	.25
28723	Condenser .05 Mfd. 400 V Tubular	1	.30
28726	Condenser .1 Mfd. 400 Tubular	1	.30
28728	Condenser .25 Mfd. 200 V Tubular	1	.30
28793	Junction Box Connection Assem. 5902-3812 Only	1	.35
29066	Electrolytic Condenser Strap	1	1.00
29074	Dual Condenser 100-250 Mmf.	2	.03
29083	Condenser 50 Mmf. 200 V Tubular	1	.20
29134	Dual Condenser .1 Mfd. 200 V Tubular	1	.30
29135	Resistor 50 M Ohm ½ Watt	3	.25
29136	Tube Shield Base	3	.15
29396	Drive Sleeve	5	.05
29476	Ball Race	5	.05
29485	Drive Shaft Thrust Spring	1	.10
29521	3/16 Ball	2	.05
29522	11/32 Ball	4	.02
29524	Spring for Drive String	1	.10
29561	Antenna Binding Post Assembly	1	.10
29582	Window	1	.15
29583	Window Retaining Ring	1	.10
29584	Cabinet Escutcheon	1	.60
29667	Escutcheon Retaining Ring	2	.25
29832	Tube Shield Body	3	.20
29893	Reflector Riveted Assembly	1	.15
30053	Reflector Mounting Bracket	1	.80
30054	Dial Light Bracket	1	.15
30092	Terminal Board	2	.10
30099	Drive String & Eyelet Assembly	1	.10
30143	Condenser .05 Mfd. 200 V Tubular	1	.25
30152	Terminal Board (4 Lug)	1	.10
30172	Outer Drive Shaft	1	.25
30173	Inner Drive Shaft	1	.10
30182	Coil Shield & Eyelet Assem.	2	.25
31075	4-Prong Socket	1	.15
31079	6-Prong Socket	3	.15
31080	7-Prong Socket	1	.15
31193	Drive Shaft Mounting Bracket Assem.	1	.30
31218	Tube Shield Cap	3	.10
31360	Window Gasket	1	.05
31424	Condenser Insulating Shield	1	.10
31710	Drive Drum, Hub and Gear Assem.	1	.110
31714	Gear Spring	1	.05
31726	Pinion, Gear & Adjusting Plate Assem.	1	.55
31775	Pointer (Hour Hand)	1	.10
31777	Terminal Board	1	.10
31860	Resistor 2 M ¼ Watt	2	.15
31864	Condenser .006 Mfd. 700 V Tubular	1	.25
31868	Condenser .003 Mfd. 700 V Tubular	1	.25

Part No.	Description	No. Used	Price $
32444	Knob (For Model 580)	3	.20
32445	Knob (For Model 580 Range Switch)	1	.20
32493	Resistor 1 Meg. 1/3 Watt	2	.15
32888	Mounting Foot Assem.	4	.25
32966	Electrolytic Condenser Strap	1	.04
32967	12 Mfd. 25 V Dry Electrolytic Cond.	1	.75
33022	Power Transf. 25-50 Cycle, 115 V.	1	7.00
33025	Power Transf. 110-130-220-250 V. 50-60 Cycle	1	7.00
33039	Power Transf. 50-60 Cycle, 115 V	1	5.00
33049	2nd I.F. Coil & Shield Assem.	1	1.75
33065	1st I.F. Coil & Shield Assem.	1	1.35
33066	Oscillator Padder Condenser	1	1.40
33070	Knob for Model 581	3	.20
33071	Knob for Model 581 (Range Switch)	1	.20
33092	Transformer Mounting Spacer	4	.03
33138	Resistor 4 M Ohm 1 Watt	1	.20
33233	Condenser 1068 Mmf.	1	.20
33278	Wave Filter & Condenser Assem.	1	.80
33288	Antenna Coil & Shield Assem.	1	1.45
33292	Oscillator Coil & Shield Assem.	1	1.35
33294	Oscillator Coil & Shield Assem.	2	1.70
33296	Trimmer Assem. (Ant.)	1	.40
33297	Trimmer Assem. (Osc.)	1	.40
33298	Spacer for Trimmers	4	.04
33299	Range Switch	1	1.35
33300	Volume Control	1	1.05
33301	Tone control switch	1	.45
33317	Variable Condenser	1	3.00
33367	Decalcomania—Range Letters	1	.10
33368	Electrolytic Condenser Cathode Terminal	1	.02
33369	Electrolytic Condenser 12 Mfd 450 V	1	1.20
33371	Electrolytic Condenser 10 Mfd. 250 V	1	.85
33372	Condenser .0098 Mfd. 700 V. Tubular	2	.25
33469	18 Mfd.—100 V. Wet Electrolytic Cond.	1	.90
33471	Attach. Cord	1	.25
33853	Speaker Cable	1	.90
34435	Condenser .02 Mfd. 400V Tubular	1	.20
34436	Condenser .05 Mfd. 400 V Tubular (Audio)	1	.20
34449	Dial Chart	1	.20
34461	Pointer & Pinion Assem.	1	.60
61207	Set Screw (Chassis Mtg.)	4	.01
63011	Set Screw (Drive Sheave)	2	.02
63014	Felt Washer for Model 581	4	.02
63838	Felt Washer for Model 580	4	.01
63863	Flat Washer (Chassis Mtg.)	4	.01

884 SPEAKER PARTS

28844	Yoke & Pole Piece Assem.	1	1.20
28849	Gasket	1	.02
29038	Speaker	2	.10
29041	Basket & Front Plate Assem.	1	1.00
29047	Terminal Strip Assem.	1	.20
29051	Terminal Strip Cover	1	.10
29052	Terminal Strip Cover Insul.	1	.05
29741	Output Transformer	1	1.75
29769	Clamp Ring	1	.25
31355	Cone & Voice Coil Assem.	1	1.80
31447	884 Speaker Complete	1	10.50
31448	Field Coil Assem.	1	3.50

Prices subject to change without notice.

SERVICE DATA

CONTINUITY AND VOLTAGE

Continuity and voltage readings should be taken from the underside of the chassis. The values given on the schematic diagram are average and allow the service man to make a quick check of the chassis constants. The socket layouts given on the schematic diagram show each socket from the underside.

THE RANGE SWITCH

The Range switch is a simple four pole triple throw switch with its contacts in a convenient position over the coil forms allowing operation with very short wire leads.

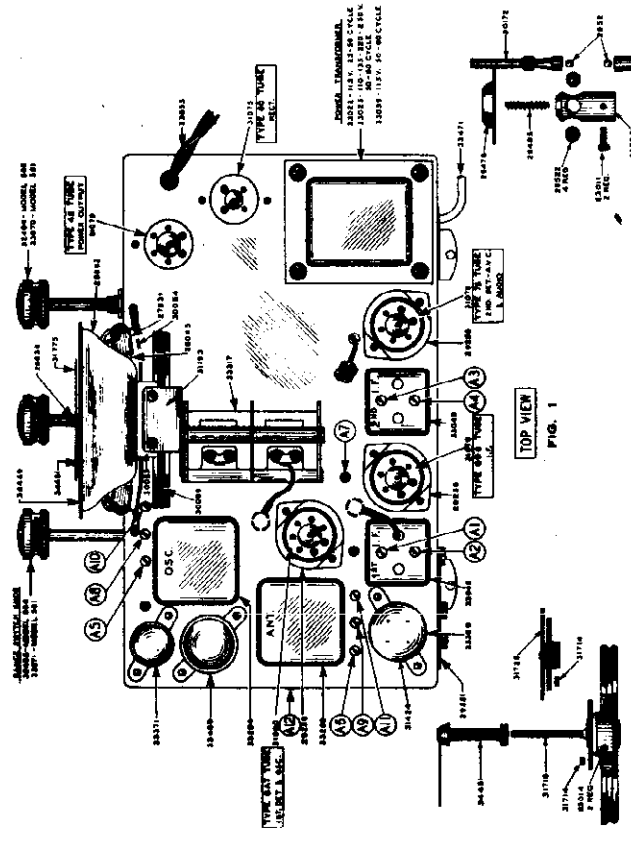

FIG. 1

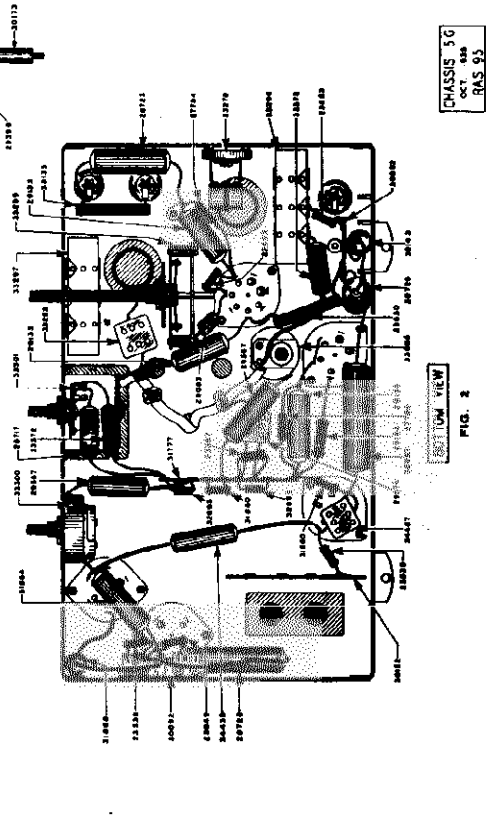

FIG. 2

CHASSIS 5G
OCT. 656
RAS 95

©John F. Rider, Publisher

GENERAL HOUSEHOLD UTILITIES CO.

MODELS 580,581
Chassis 5G,Revised
Schematic,Voltage
Notes

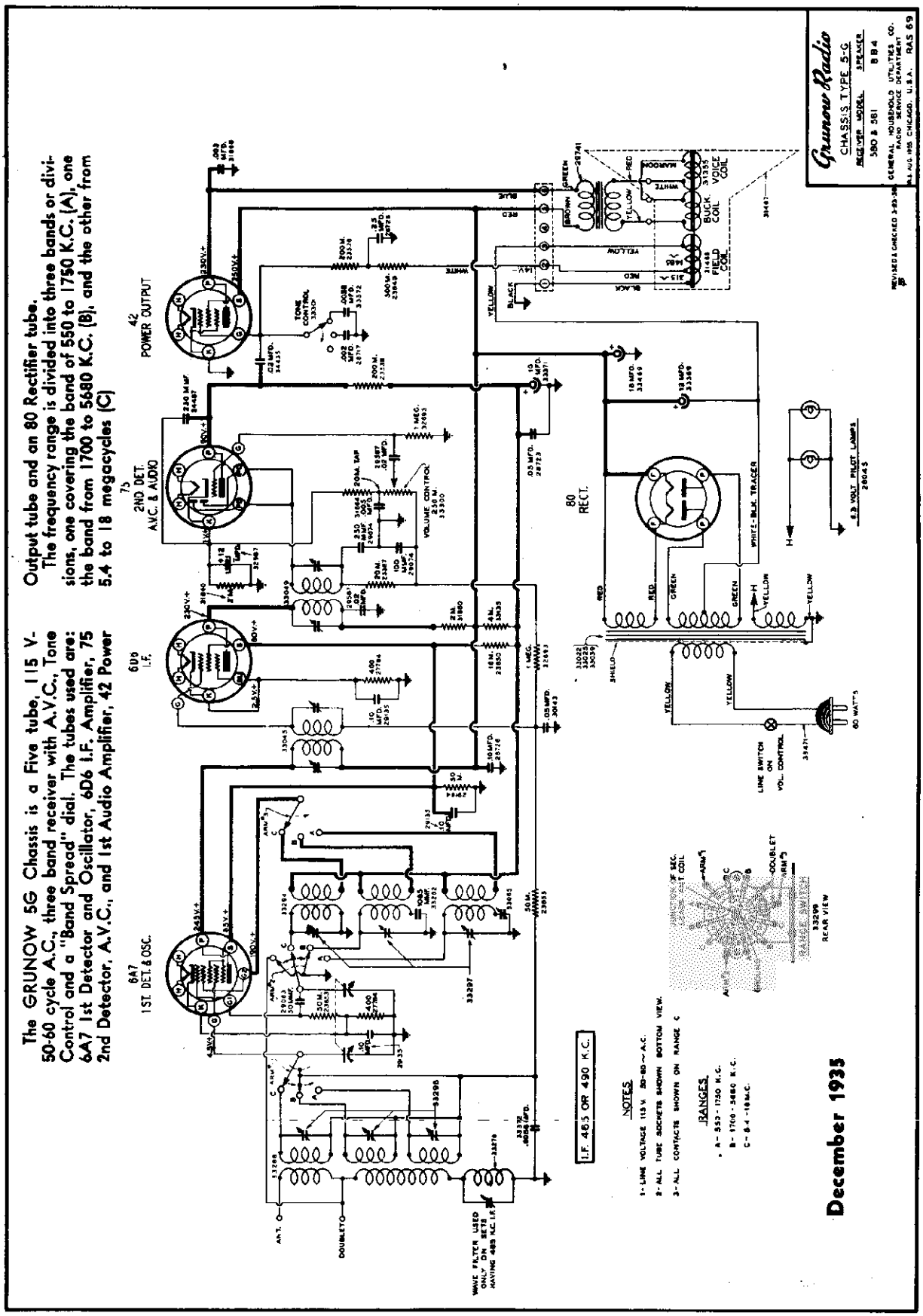

MODELS 620,621
Chassis 6HB
Socket,Trimmers
Chassis

GENERAL HOUSEHOLD UTILITIES CO.

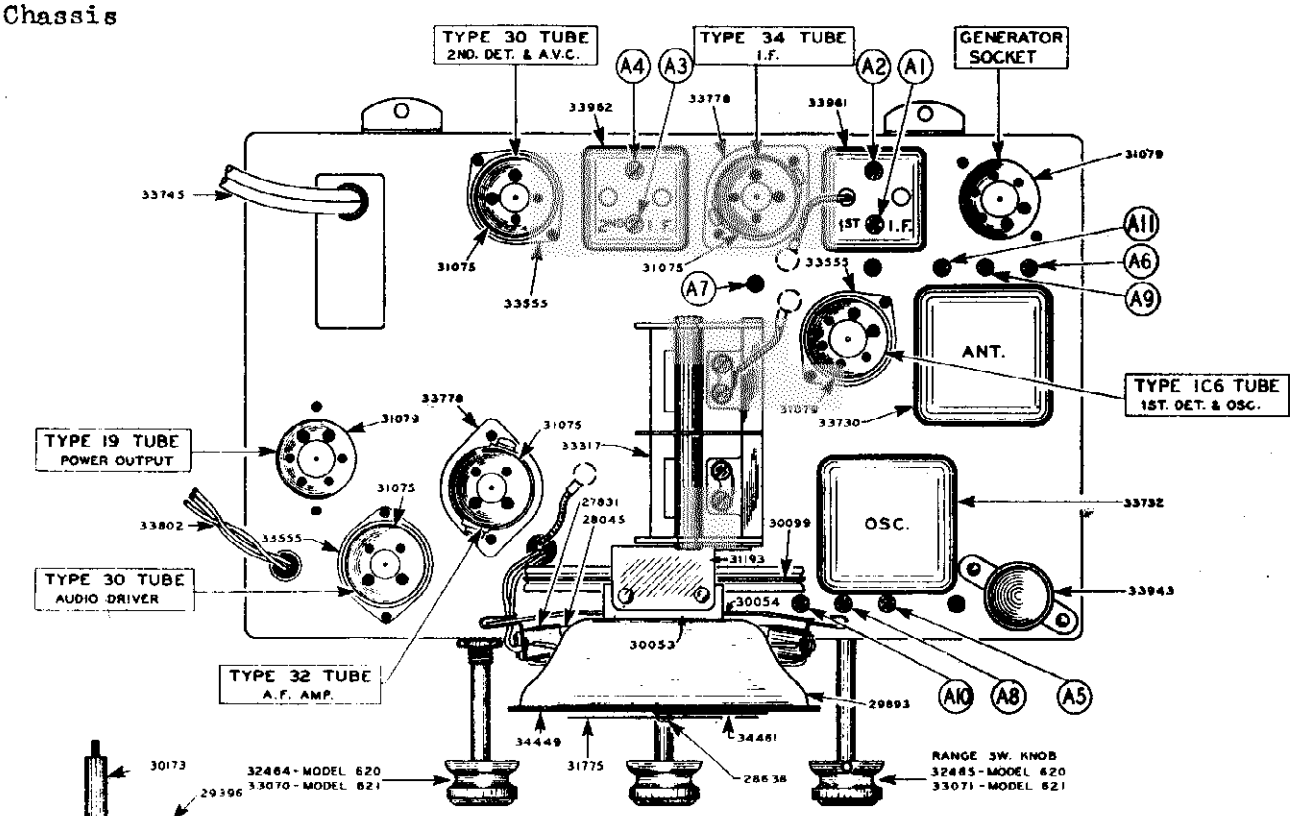

TOP VIEW

FIG. 1

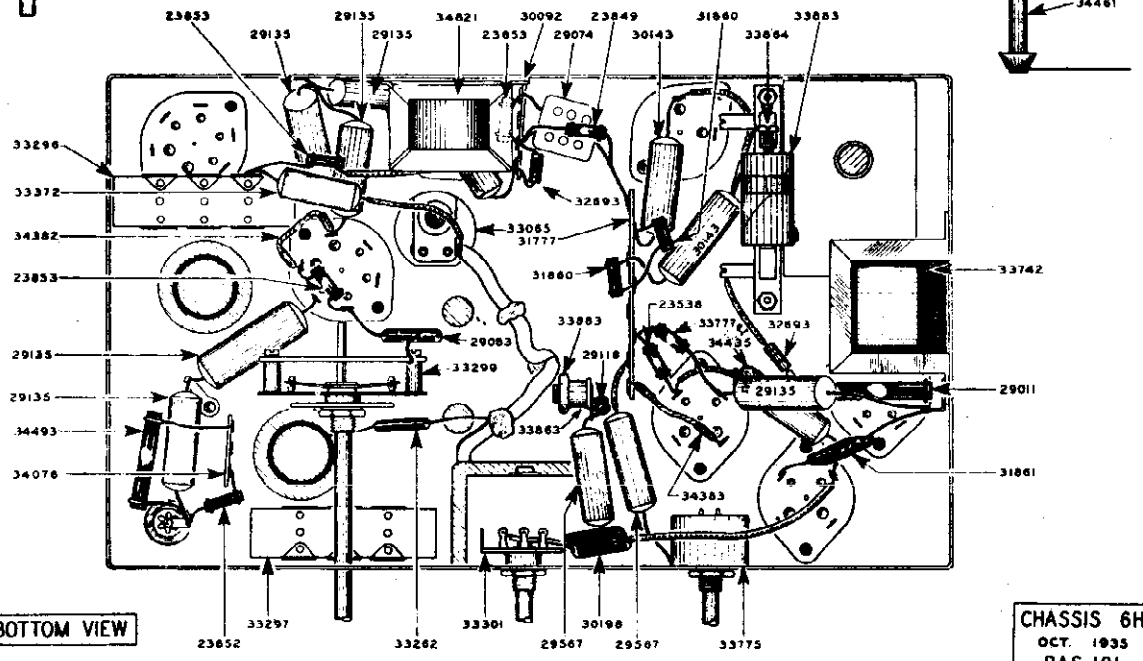

BOTTOM VIEW

FIG. 2

CHASSIS 6HB
OCT. 1935
RAS 101

©John F. Rider, Publisher

MODELS 620, 621
Chassis 6HB
Schematic
Voltage

GENERAL HOUSEHOLD UTILITIES CO.

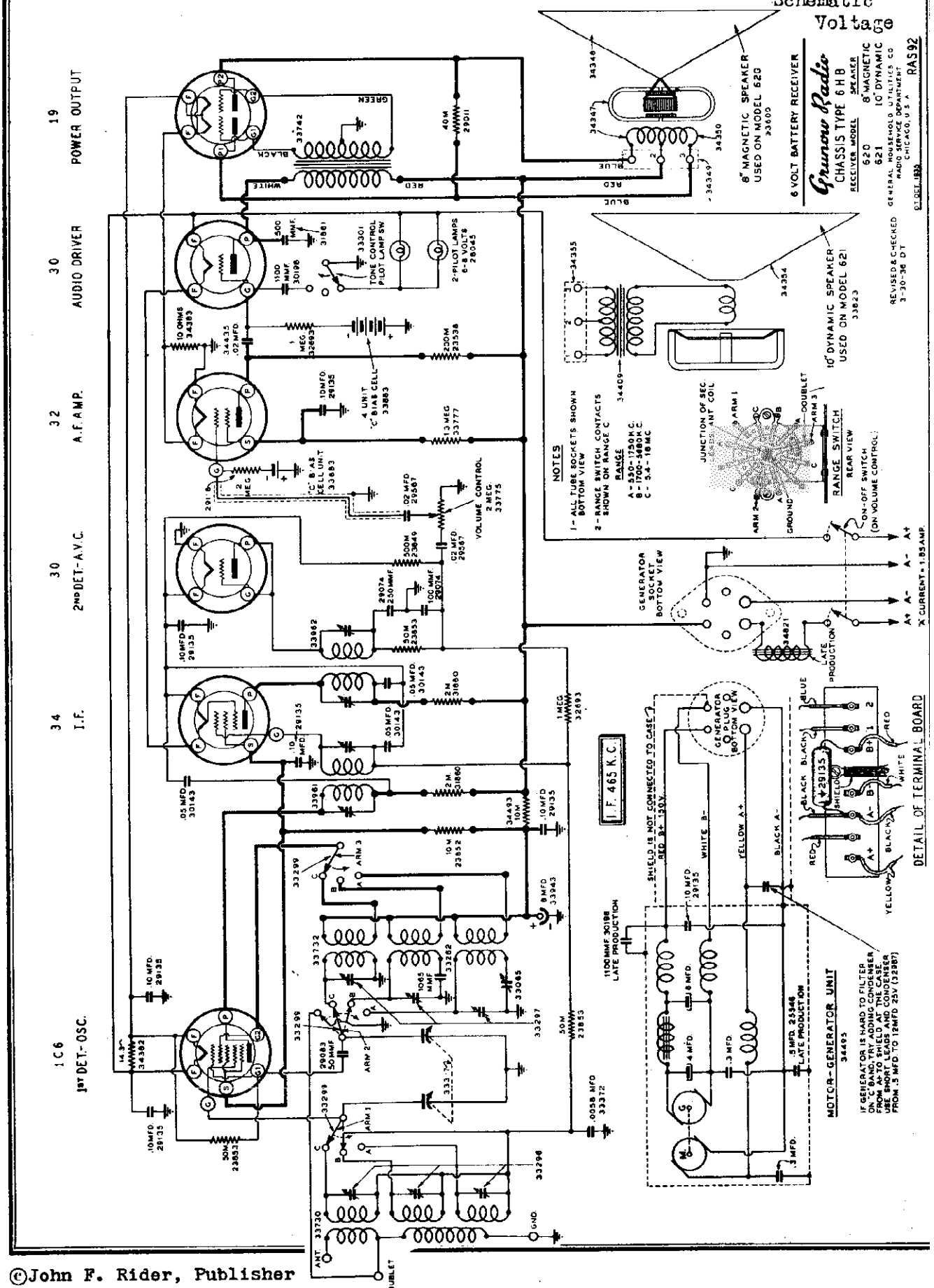

©John F. Rider, Publisher

MODELS 620, 621
Chassis 6HB
Alignment, Parts

GENERAL HOUSEHOLD UTILITIES CO.

PARTS AND PRICE LIST

PRICES SUBJECT TO CHANGE WITHOUT NOTICE

MODEL 620—621
CHASSIS 6HB

Part No.	Description	No. Used	Price
20962	Grid Cap	3	$ .01
23838	Resistor 200M Ohm 1/4 Watt	1	.15
23849	Resistor 500M Ohm 1/4 Watt	1	.15
23852	Resistor 10M Ohm 1/4 Watt	1	.15
23857	Resistor 60M Ohm 1/4 Watt	3	.15
25546	Condenser .5 Mfd. Tubular	1	.50
27831	Socket Assembly, Pilot Light	2	.10
27839	Plug (Motor Generator)	1	.36
28045	Lamp, Pilot 6.8 V	2	.15
28638	Pointer Screw (Dial)	1	.02
29011	Resistor 40M Ohm 1-Watt	1	.20
29074	Condenser 100-250 MMF (Mica) (Dual)	1	.30
29083	Condenser 50 MMF (Mica)	1	.20
29118	Resistor 2 Meg. 1/4 Watt	1	.20
29135	Condenser .1 Mfd. 200 V Tubular	6	.25
29396	Drive Sleeve	1	.35
29476	Ball Race	1	.10
29485	Thrust Spring, Drive Shaft	1	.05
29521	Balls, 3/16	2	.02
29522	Balls, 11/32	4	.02
29524	Spring (Drive String)	1	.10
29551	Binding Post, Antenna	1	.10
29552	Window, Dial	1	.15
29553	Ring, Window Retaining	1	.10
29554	Escutcheon	1	.60
29567	Condenser .02 Mfd. 400 V. Tubular	2	.25
29612	Ring, Escutcheon Retaining	1	.20
29893	Reflector Riveted Assem.	1	.50
30053	Mounting Bracket, Reflector	1	.15
30054	Bracket, Dial Light	1	.10
30092	Terminal Board, Junction (4 Lug)	1	.10
30099	Drive String & Eyelet Assem.	1	.10
30143	Condenser .05 Mfd. 200 V Tubular	3	.25
30172	Drive Shaft Outer	1	.35
30173	Drive Shaft, Inner	1	.10
30182	Shield & Eyebolt Assem. (1st & 2nd I.F.)	2	.25
30198	Condenser 1100 MMF (Mica)	1	.25
31075	Socket, 4 Prong	4	.10
31079	Socket, 6 Prong	1	.15
31193	Drive Shaft Bearing Bracket	1	.30
33070	Knob (Model 621)	3	.20
33071	Knob (Range Switch) (Model 621)	1	.20
33262	Condenser 1065 MMF (Mica)	1	.20
33292	Shield & Eyebolt Assem. (Ant. & Osc.)	2	.35
33296	Trimmer Assem. (Red Dot) Ant.	1	.40
33297	Trimmer Assem. Osc.	1	.40
33299	Range Switch	1	1.35
33301	Tone Control & Pilot Light Switch	1	.45
33317	Condenser, Variable	1	3.00
33367	Decalcomania, Range Letters	1	.10
33372	Condenser .0058 Mfd. 700 V Tubular	1	.25
33553	Tube Shield Body	3	.10
33554	Tube Shield Cap	3	.02
33555	Tube Shield Base	3	.02
33585	Tube Shield Body (Short)	2	.10
33730	Antenna Coil & Shield Assembly	1	1.65
33732	Oscillator Coil & Shield Assembly	1	1.70
33742	Transformer, Audio Input	1	1.80
33745	Cable, Assem. Battery, Filament	1	.75
33746	Cable & Plug Assem. (Motor Generator)	1	1.00
33775	Volume Control	1	1.10
33777	Resistor 1.3 Megohm 1/4 Watt	1	.15
33778	Tube Shield Base	2	.02
33779	Tube Shield Body	2	.10
33802	Cable, Speaker	1	1.15
33830	Clip Battery Connection	2	.20
33863	Mounting Strip (Grid Coil) (1)	1	.15
33864	Mounting Strip (Grid Coil) (4)	1	.35
33883	Coil, (Grid Bias)	5	.25
33943	Condenser 8 Mfd. 150 V. Wet. Elect.	1	.80
33957	Cable Only (Motor-Generator)	1	.65
33961	1st I.F. Coil & Shield Assem.	1	1.75
33962	2nd I.F. Coil & Shield Assem.	1	1.35
34076	Term. Board Junction (3 Lug)	1	.10
34382	Resistor 14.3 Ohms 1 Watt	1	.20
34383	Resistor 10M Ohms 1/2 Watt	1	.15
34435	Condenser .02 Mfd.—400 V Tubular (Audio)	1	.25
34449	Dial Chart	1	.50
34461	Pointer & Pinion Assem. (Minute Hand)	1	.40
34493	Resistor 10 Ohm 1/2 Watt (Flex.)	1	.20

34495	Motor Generator & Cable Assem.	1	25.00
34821	"A" Choke (Iron Core)	1	1.15
61207	1" x 8-32 Screws (Chassis Mtg.)	4	.01
53839	Washer, Felt-Knobs	4	.02
63863	Flat Washer—Chassis Mtg.	4	.01

SPEAKER PARTS

33600	Speaker 8" Magnetic (Model 620)	1	7.75
34347	Motor Drive Assy. with Coil Comp.	1	6.00
34348	Cone & Apex Assy. (620)	1	1.50
34349	Terminal Strip Assy. (620)	1	.15
34350	Motor Coil Only (620)	1	1.50
33823	Speaker 10" P.M. (Mod. 621)	1	12.00
34409	Speaker Transformer (621)	1	2.35
34354	Cone & Voice Coil Assy. (621)	1	3.50
34355	Transformer Terminal Strip	1	.15

31360	Gasket, Window	1	.05
31710	Drive Drum, Hub & Gear Assem.	1	1.10
31714	Spring (Gear)	2	.05
31726	Pinion Gear & Adjusting Plate Assem.	1	.55
31775	Pointer (Hour Hand)	1	.10
31777	Terminal Board, Junction (8 Lug)	1	.10
31860	Resistor 2M Ohm 1/4 Watt	2	.15
31861	Condenser 500 MMF (Mica)	1	.20
32464	Knob (Mod. 620)	3	.20
32465	Knob (Range Sw.) (Mod. 620)	1	.20
32518	Cabinet (Model 620)	1	
32598	Cabinet (Model 621)	1	
32693	Resistor 1 Meg. Ohm 1/3 Watt (Insul)	2	.15
32858	Mtg. Foot Assy. (Rubber)	4	.25
32865	Clamp, Electrolytic Mtg. (1")	1	.05
33065	Condenser, Osc. Padder 375 MMF	1	.40

SERVICE DATA

CONTINUITY AND VOLTAGE

Continuity and voltage readings should be taken from the underside of the chassis. The values given on the schematic diagram are average and allow the service man to make a quick check of the chassis constants. The socket layouts given on the schematic diagram show each socket from the underside.

THE RANGE SWITCH

The Range switch is a simple four pole triple throw switch with its contacts in a convenient position over the coil forms allowing operation with very short wire leads. The 6H8 Chassis uses a 4 unit "C" Bias cell in the grid lead of the 30 Audio Driver tube, and a single unit Bias cell in the grid of the 32 A.F. Amplifier tube.

These cells will, in time, have to be replaced, and in so doing, be sure that the carbon (—) side of the cell is connected to the ground side of the cell terminal clip.

An indication of a faulty cell will be distorted tone quality and the quickest check is a substitution of the old cells with new ones. For testing purposes a "C" battery may be used — using a 1½ volt battery in place of the single cell, and a 4½ volt battery in place of the 4 unit cell.

The bias cell has a voltage of about 1.2 volts, but due to their low current output they cannot be measured by any ordinary volt meter.

CIRCUIT ALIGNMENT PROCEDURE

Do not attempt to align the 6H8 Chassis without proper equipment. Alignment condensers are shown in the accompanying illustrations, and are numbered in order of procedure.

1. EQUIPMENT:

(A) Test Oscillator.
A modulated Oscillator capable of producing signals at the I.F., Broadcast and Short-Wave frequencies is necessary for alignment of the 6H8 Chassis.

(B) Insulated Screw Driver—(All bakelite or fibre) about 6" long.

(C) Output Meter.
This may be any of the standard Output Meters, but should be sufficiently sensitive to provide a good deflection at low signal strength.

(D) Coupling Means.
Coupling Condensers of 200 mmf., .25 mfd., and a 400 Ohm resistor should be used when coupling oscillator to receiver during alignment as specified in the procedure.

(E) The receiver should be aligned in a location free from local interference (interference caused by motors, Neons, automobile ignition, etc.) as high frequency disturbances will cause difficulties when the short wave section is being adjusted. (A screen room is to be recommended.)

2. DIAL SETTING:

Turn dial knob until condensers are fully meshed. The dial pointer (Hour Hand) should be on the horizontal line of the dial, pointing to 9 and 3 o'clock. The minute hand should be at 12 o'clock or in a vertical position.

3. I. F. ALIGNMENT:

(A) Connect signal lead of test oscillator to grid of 1C6 (1st Detector tube) through .25 mfd., condenser. Connect the ground lead to the chassis.

(B) Set Dial Pointer to 1400 K.C. and range switch on position "A".

(C) Place test Oscillator in operation at 465 K.C. Turn receiver volume control and tone control to maximum.

(D) Attenuate test Oscillator output to lowest value, consistent with obtaining a readable indication on output meter.

(E) Adjust four I.F. Trimmers, A1, A2, A3, A4 located on the I. F. Transformers on top of Chassis. Fig. (1), until maximum output is obtained. During alignment, maintain as low a value of signals as will allow obtaining of accurate adjustment.

4. 1400 K.C. ALIGNMENT:

(A) Connect signal lead of test oscillator through 200 mmf. condenser to Antenna binding post.

(B) Connect the test oscillator ground lead to the ground connection of chassis.

(C) Place test oscillator in operation at 1400 K.C.

(D) Turn dial pointer to 1400 K.C.

(E) Turn range switch to range "A".

(F) Adjust broadcast oscillator trimmer A5, Fig. (1), to maximum output.

(G) Adjust 1st Det. Trimmer (A6), Fig. (1), to maximum output.

5. 600 K.C. ALIGNMENT:

(A) Place test oscillator in operation at 600 K.C.

(B) Tune in signal to maximum (this point does not have to be exactly at 600 K.C. dial setting).

(C) Adjust the 600 K.C. Padding Condenser (A7), Fig. (1), (which is on top of Chassis to the rear of variable condenser) in direction of signal increase. At some time rock the tuning condenser back and forth through resonance while adjusting padding condenser until maximum output is obtained.

6. RECHECK 1400 K.C. ALIGNMENT.

7. 5000 K.C. ALIGNMENT:

(A) Set range switch at "B".

(B) Place test Oscillators in operation at 5000 K.C.

(C) Turn Dial Pointer to 5000 K.C.

(D) Adjust Set Oscillator Trimmer (A8), Fig. (1), to maximum output.

(E) Adjust Detector Trimmer (A9) Fig. (1) to maximum output.

8. 18 M.C. ALIGNMENT:

(A) Connect signal lead of test oscillator through 400 Ohm resistor to Antenna binding post of Chassis.

(B) Connect the ground lead to ground connection of Chassis.

(C) Set range switch to range "C" and turn dial pointer to 18 M.C.

(D) Place test oscillator in operation at 18 M.C.

(E) Adjust set Oscillator Trimmer (A10), Fig. (1), to maximum output.

(F) Adjust Detector Trimmer (A11), Fig. (1), to maximum output.

(G) On the 18 M.C. Oscillator Alignment it will be noted that there are two settings at which the signal will be received. Use the lower of the images for alignment point, that is, the setting giving most capacity or the point at which the trimmer screw is farthest in.

©John F. Rider, Publisher

GENERAL HOUSEHOLD UTILITIES CO.

MODELS 640,641
Chassis 6J,Revised
Schematic,Voltage

The GRUNOW 6J Chassis is a six tube, 115 V-50-60 cycle A.C., three band receiver with A.V.C., Tone Control and a "Band Spread" dial. The tubes used are: 6A7 1st Detector and Oscillator, 6D6 1st I.F. Amplifier, 6D6 2nd I.F. Amplifier, 75 2nd Detector, A.V.C., and 1st Audio

Amplifier, 42 Power Output tube and an 80 Rectifier tube. The frequency range is divided into three bands or divisions, one covering the band of 550 to 1750 K.C. (A), one the band from 1700 to 5680 K.C. (B), and the other from 5.4 to 18 megacycles (C).

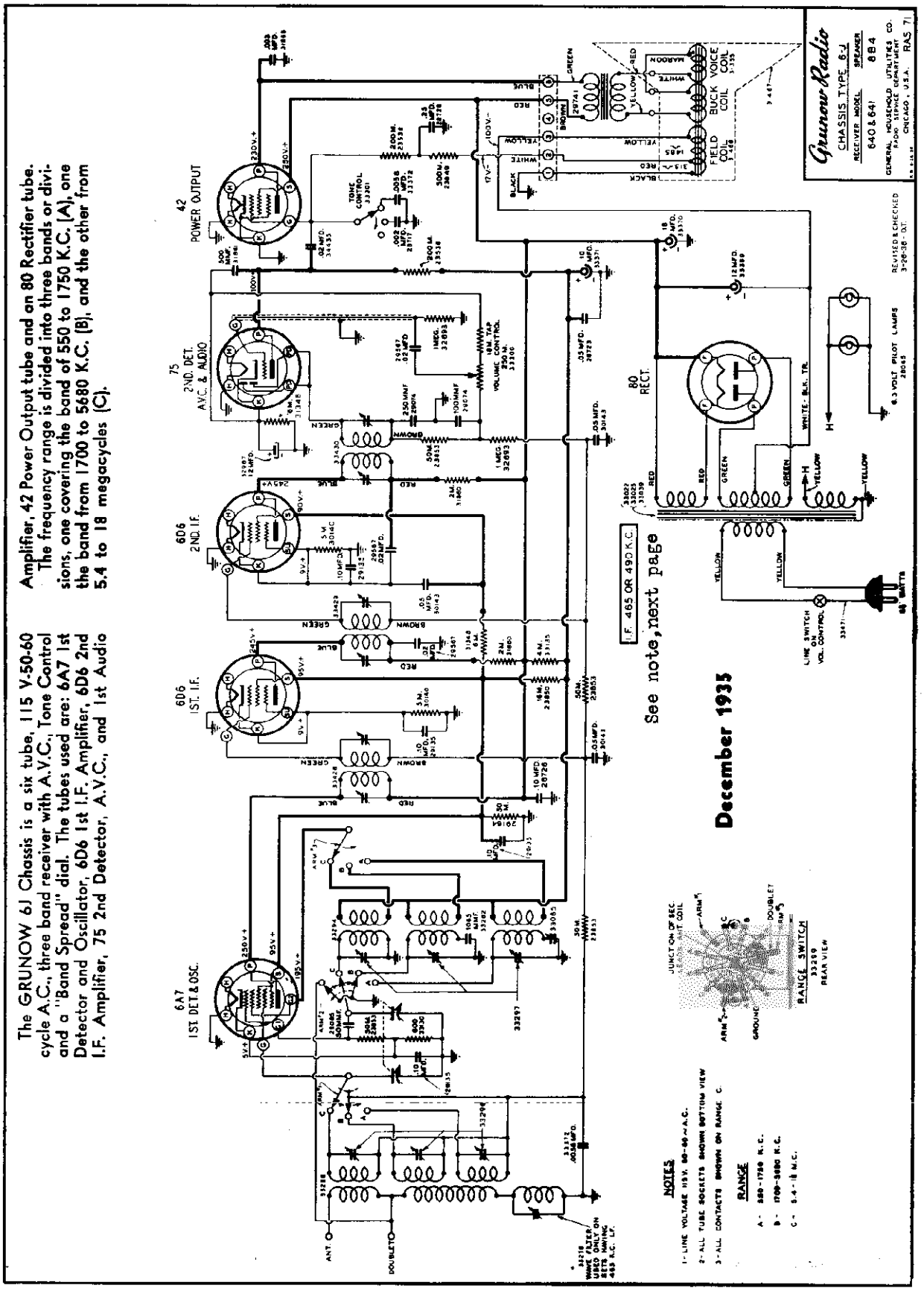

© John F. Rider, Publisher

MODELS 640,641
Chassis 6J,Revised
Socket,Trimmers
Chassis,Notes,Parts

GENERAL HOUSEHOLD UTILITIES CO.

NOTE:—

Due to interference caused by commercial code stations in some locations, it has been necessary to use two different I. F. frequencies on this Receiver, one of 490 K.C. where code interference is in the neighborhood of 455 K.C. and the other where the interfering stations are operating in the 500 K.C. band, an I. F. of 465 K.C. is used.

The I. F. Frequencies of the Receiver is stamped on the rear of the Chassis, and if there is any doubt as to I. F. peaking, it is only necessary to apply a variable I. F. signal to the I. F. Amplifier, and maximum output will indicate resonance or frequency at which the I. F.'s are peaked.

To further overcome this form of interference, sets peaked at 465, also incorporate a wave filter in the Antenna circuit. This filter should be tuned to the same frequency as the I. F. Transformers. Tuning is accomplished after the set has been completely aligned by applying the I. F. frequency signal through a 200 mmf. condenser to the Antenna binding post of the Receiver, and tuning the wave-filter condenser, (A14) Fig. 1 (located on the right hand side of the Chassis) to that the incoming signal is at MINIMUM output.

In other words, apply a strong 465 K.C. signal to the Receiver Antenna Post through the 200 mmf. Condenser, and tune wave filter so that the output meter indicates minimum.

PARTS AND PRICE LIST

MODELS 640—641
CHASSIS 6J—6JX—6JZ

Part No.	Description	No. Used	Price
20678	Terminal Clip	1	$ .02
20962	Grid Cap	4	.01
23358	Vertical Terminal (1 Lug)	1	.1[illegible]
23358	200 M Ohm ½ Watt Resistor	2	.15
23449	500 M Ohm ½ Watt Resistor	1	.15
23850	16 M Ohm 1 Watt Resistor	1	.20
23853	60 M Ohm ½ Watt Resistor	1	.15
24256	Tube Shield Clip	4	.05
24432	Electrolytic Condenser Step Washer	1	.02
27831	Pilot Light Socket	2	.10
28046	Pilot Lens	2	.15
28638	Pointer Screw	2	.02
28717	.002 700 V. Tubular Condenser	1	.25
28723	.05 Mfd. 400 Volt Tubular Condenser	1	.30
28726	.1 Mfd. 400 Volt Tubular Condenser	1	.30
28728	.25 Mfd. 200 Volt Tubular Condenser	1	.35
28793	Junction Box Connection Assem. (640Z-6417 Only)	1	1.00
29065	Electrolytic Condenser Strap	2	.03
29074	100-250 Mmf. Dual Condenser	1	.30
29085	50 Mmf. Condenser	1	.20
29135	.1 Mfd. 200 Volt Tubular Condenser	4	.25
29164	50 M Ohm ½ Watt Resistor	1	.15
29209	Speaker Cable Clamp	1	.02
29396	Drive Sleeve	1	.35
29476	Ball Race	1	.10
29485	Drive Shaft Thrust Spring	1	.05
29521	3/16 Ball	2	.02
29522	1/32 Ball	1	.02
29524	Spring (Drive String)	1	.10
29551	Dial Window Binding Post Assem.	1	.10
29552	Dial Window Retaining Ring	1	.10
29554	Cabinet Escutcheon	1	.40
29567	.02 Mfd. 400 Volt Tubular Condenser	3	.25
29612	Escutcheon Retaining Spring	1	.20
29628	Vertical Terminal (4 Lug)	1	.10
29832	Tube Shield Body	4	.15
29893	Reflector Riveted Assem.	1	.50
30053	Reflector Mounting Bracket	1	.15
30054	Dial Light Bracket	2	.10
30072	Terminal Board	1	.10
30099	Drive String & Eyelet Assem.	2	.10
30140	5 M Ohm ¼ Watt Resistor	1	.15
30143	Tube Shield Cap	4	.05
30152	.05 Mfd. 200 V Tubular Condenser	3	.25
30172	Terminal Board	1	.10
30173	Outer Drive Shaft	1	.35
30182	Coil Shield & Eyebolt Assem.	3	.25
31075	4 Prong Socket	1	.10
31079	6 Prong Socket	4	.15
31080	7 Prong Socket	1	.15
31193	Drive Shaft & Bearing Assem.	1	.30
31215	Tube Shield Cap	4	.10
31248	1 M Ohm ¼ Watt Resistor	2	.10
31340	Condenser Insulating Shield	1	.05
31424	Drive Dial & Gear Assem.	1	.10
31710	Spring—Inside Gear Assem.	2	.10
31714	Pinion, Gear & Adjustable Plate Assem.	1	.05
31726	Rubber Washer (For Variable Cond. Mtg.)	6	.05
31739	Pointer (Hour Hand)	1	.10
31775	Terminal Board	1	.10
31777	2 M Ohm ¼ Watt Resistor	2	.15
31860	500 Mmf. Condenser	1	.20
31861	.003 Mfd. 700 Volt Tubular Condenser	1	.25
31868	Knob (For 640)	3	.20
32464	Knob (For 640) (Range Switch)	1	.20
32465	1 Meg. 1/3 Watt Resistor	2	.15
32893	Electrolytic Condenser Strap	1	.25
32895	12 Mfd. 25 V Dry Electrolytic Condenser	4	.24
32927	Power Transformer 115 V. 25-50 Cycles	1	.75
33025	Power Transformer 110-115-220-250 V. 50-60 Cycle	1	7.00
33039	Power Transformer 115 V. 50-60 Cycles.	1	7.00
33065	Osc. Padder Condenser (375 Mmf.)	1	5.00
33070	Knob (For 641)	1	.40
33071	Knob (For 641) (Range Switch)	3	.20
33082	Transformer Mounting Spacer	1	.20
33130	600 Ohm ¼ Watt Resistor	4	.03
33135	4 M Ohm 1 Watt Resistor	1	.15
33262	1965 Mmf. Condenser	1	.20
33278	Wave Filter & Condenser Assem.	1	.20
33288	Antenna Coil and Shield Assem.	1	.80
33292	Shield & Eyebolt Assem.	1	1.65
33294	Oscillator Coil & Shield Assem.	2	.35
33296	Antenna Trimmer Assem. (Red Dot)	1	1.70
33297	Oscillator Trimmer Assem.	1	.40
33298	Spacer for Trimmer Assem.	1	.40
33299	Range Switch	4	.04
33300	Volume Control	1	1.35
33301	Tone control switch	1	1.05
33316	Var-able Condenser	1	.45
33317	Decalcomania (Range Letters)	2	3.00
33318	Electrolytic Condenser Lug Terminal	1	.10
33319	12 Mfd. 450 Volt—Wet Elec. Condenser	1	1.20
33370	18 Mfd. 300 Volt—Wet Elec. Condenser	1	1.00
33371	10 Mfd. 250 Volt—Wet Elec. Condenser	1	.85
33372	.0058 Mfd. 700 V Tubular Condenser	1	.15
33428	1st I.F. Coil & Shield Assem.	2	2.40
33429	2nd I.F. Coil & Shield Assem.	1	2.15
33430	3rd I.F. Coil & Shield Assem.	1	2.00
33469	18 Mfd. 300 Volt—Wet Elec. Condenser.	1	.90
33471	Attachment Cord	1	.40
33853	Speaker Cable	1	.55
34435	Condenser .02 Mfd. 400 V Tubular (Audio)	1	.25
34449	Dial Chart	1	.50
34461	Pointer & Pinion Assem. (Minute Hand)	1	.40
61207	1" x 8-32 Screw (Chassis Mtg.)	4	.01
63011	5/16 x 8-32 H. H. Set Screw	2	.01
63014	5/16 x 10-32 Set Screw	2	.02
63819	Felt Washers for Knobs	4	.01
63863	Flat Washers (Chassis Mtg.)	4	.01

884 SPEAKER

28844	Yoke & Pole Piece Assem.	1	1.20
28849	Spacer	2	.02
29038	Gasket	1	.10
29041	Basket & Front Plate Assem.	1	1.00
29047	Terminal Strip Assem.	1	.30
29051	Terminal Strip Cover	1	.10
29054	Terminal Strip Cover Insul.	1	.05
29141	Output Transformer	1	1.75
29169	Cone & Voice Coil Assem.	1	1.25
31135	Cone Ring	1	.50
31448	884 Speaker Complete	1	10.00
31468	Field Coil Assem.	1	3.00

Prices subject to change without notice.

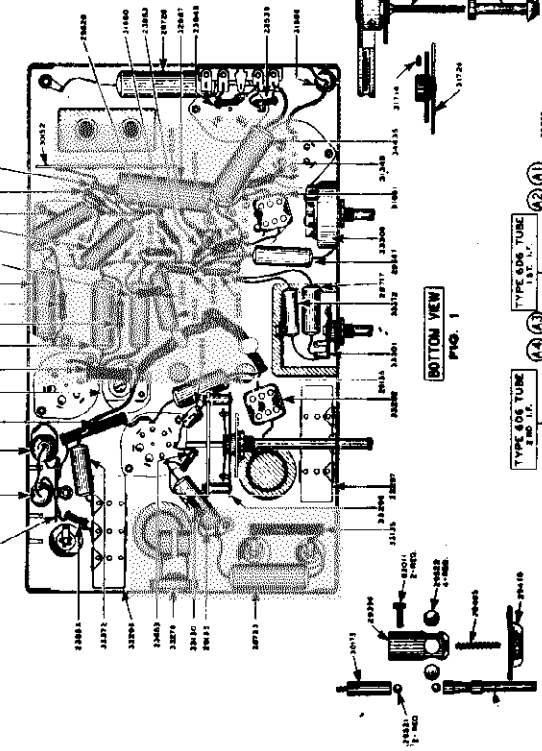

MODELS 650,651
Chassis 6A,Revised
Schematic,Voltage
Resistance

GENERAL HOUSEHOLD UTILITIES CO

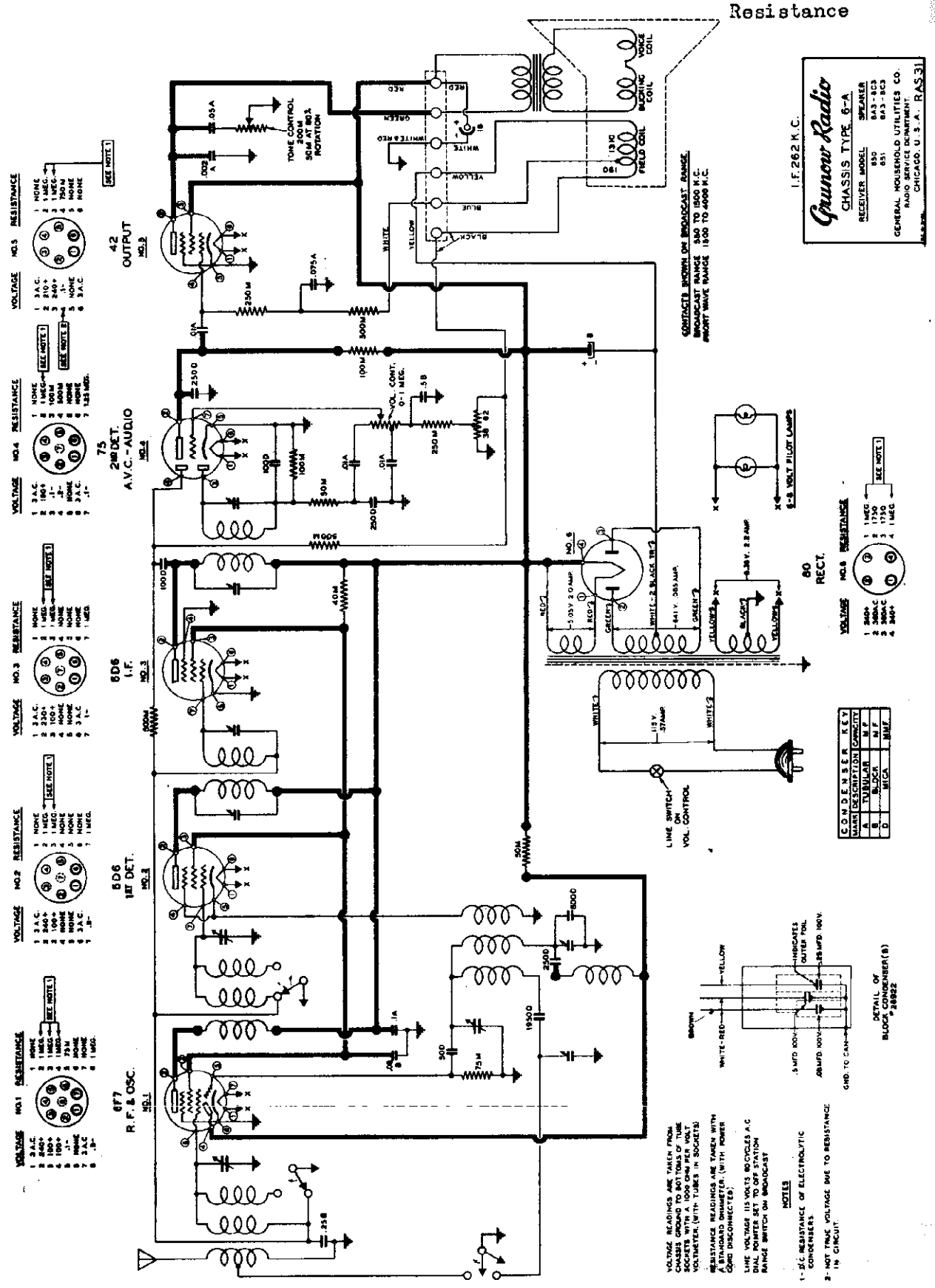

©John F. Rider. Publisher

MODELS 650,651
Chassis 6A,Revised GENERAL HOUSEHOLD UTILITIES CO.
Socket,Trimmers
Chassis,Alignment

FIGURE 1

CHASSIS 6-A TOP VIEW

The following characteristics apply to the GRUNOW Radio—Chassis 6A:

This model is a 6 tube Super-Heterodyne Dual Wave (540 to 1500 KC and 1500 to 4200 KC) Receiver using 1-6F7 tube as an R.F. Amplifier and Oscillator, 1-6D6 tube as a 1st Detector, 1-6D6 tube as an I.F. Amplifier, 1-75 tube as a Diode Detector, delayed Automatic Volume Control (AVC) and high gain audio Amplifier. The 42 output tube is a power amplifier pentode and is capable of producing large power output with a relatively small signal input. This tube receives its bias through the voltage drop produced in the tapped speaker field. The rectifier tube is an 80, the output of which is well filtered through the action of the speaker field and the 8 and 18 mfd. electrolytic condensers.

FIGURE 2

ALIGNMENT PROCEDURE

Do not attempt to align the 6A Chassis without the proper equipment. Alignment condensers are shown in the accompanying illustrations and are numbered in order of procedure.

1. EQUIPMENT.

a. Test Oscillator.
A modulated oscillator capable of producing signals at 262 K.C. —600 K.C.—1400 K.C., and 3700 K.C. is necessary for alignment of the 6A Chassis.

b. Output Meter.
This may be any of the standard output meters on the market, but should be sufficiently sensitive to provide a good deflection at low signal strength, and should also incorporate an adjustable shunt so that extremely strong signals may be read.

c. Coupling Means.
Coupling condensers of 200 Mmf., and .25 Mfd. should be used when coupling oscillator to receiver during alignment as specified in the following paragraphs.

2. DIAL SETTING.
Turn dial knob until condensers are fully meshed. The dial pointer should be on the horizontal line of the dial.

3. I. F. ALIGNMENT.

a. Connect signal lead of test oscillator to grid of the 6D6 (first detector tube) through a .25 Mfd. condenser. Connect the ground lead to the Chassis.

b. Set dial pointer to 1400 K.C. and range switch on counter-clockwise (broadcast) position.

c. Place test oscillator in operation at 262 K.C. Turn receiver volume control and tone control to maximum.

d. Attenuate test oscillator output to lowest value consistent with obtaining a readable indication on output meter.

e. Adjust the four I. F. trimmers, (A1-A2-A3-A4) Fig. 2, located on the underside of chassis, until maximum output is obtained. During alignment maintain as low a value of signal as will allow obtaining of accurate adjustment.

4. 3700 K.C. ALIGNMENT.

a. Connect signal lead of test oscillator through 200 mmf. condenser to antenna binding post of chassis.

b. Connect the ground lead to ground terminal of chassis.

c. Set range switch to S.W. range (clockwise position).

d. Place test oscillator in operation at 3700 K.C. and set dial pointer on 3700 K.C.

e. Adjust oscillator trimmer (A8) (front trimmer located on top of variable condenser).

5. 1400 K.C. ALIGNMENT.

a. Turn range switch counter-clockwise to broadcast position.

b. Place test oscillator in operation at 1400 K.C. and set dial pointer at 1400 K.C.

c. Adjust the 1400 K.C. trimmer (A6) located on the front left face of the chassis, the lower of the two at this location.

d. Adjust the second and third trimmers (A7 and A8) on the top of the variable condenser.

e. Repeat the 1400 K.C. alignment at least twice.

©John F. Rider, Publisher

GENERAL HOUSEHOLD UTILITIES CO.

MODELS 660, 661, 662
Chassis 6C, Revised
Schematic, Voltage
Resistance, Notes

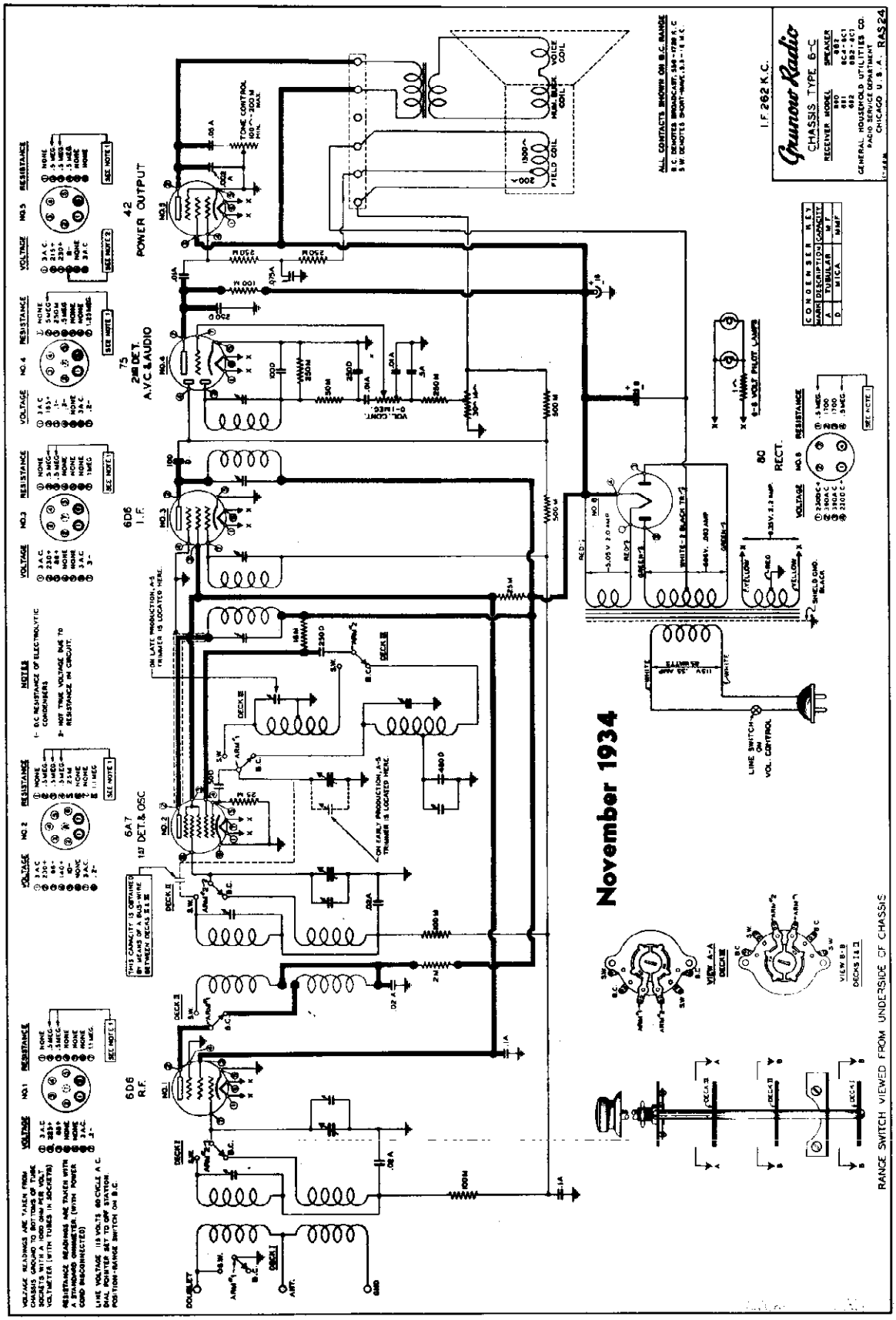

This model is a 6 tube Super Hetrodyne Short Wave (550 to 1740 K.C. and 5.5 to 16.0 M.C.) Receiver using 1-6D6 (Triple-Grid super-control) tube as an R.F. Amplifier, 1-6A7 (Pentagrid converter) tube as a 1st Detector and Oscillator. 1-6D6 (Triple-grid super-control) tube as an I. F. Amplifier. 1-75 (Duplex-diode high mu triode) tube is used as a Diode Detector or Signal Rectifier, delayed Automatic Volume Control (AVC) and high gain audio amplifier. The 42 output tube is a power amplifier pentode and is capable of producing large power output with a relatively small signal input. This tube receives its bias through the voltage drop produced in the tapped speaker field. The rectifier tube is an 80, the output of which is well filtered through the action of the speaker field and the 8 and 18 mfd. electrolytic condensers.

© John F. Rider, Publisher

MODELS 660,661,662
Chassis 6C,Revised
Socket,Trimmers
Chassis

GENERAL HOUSEHOLD UTILITIES CO.

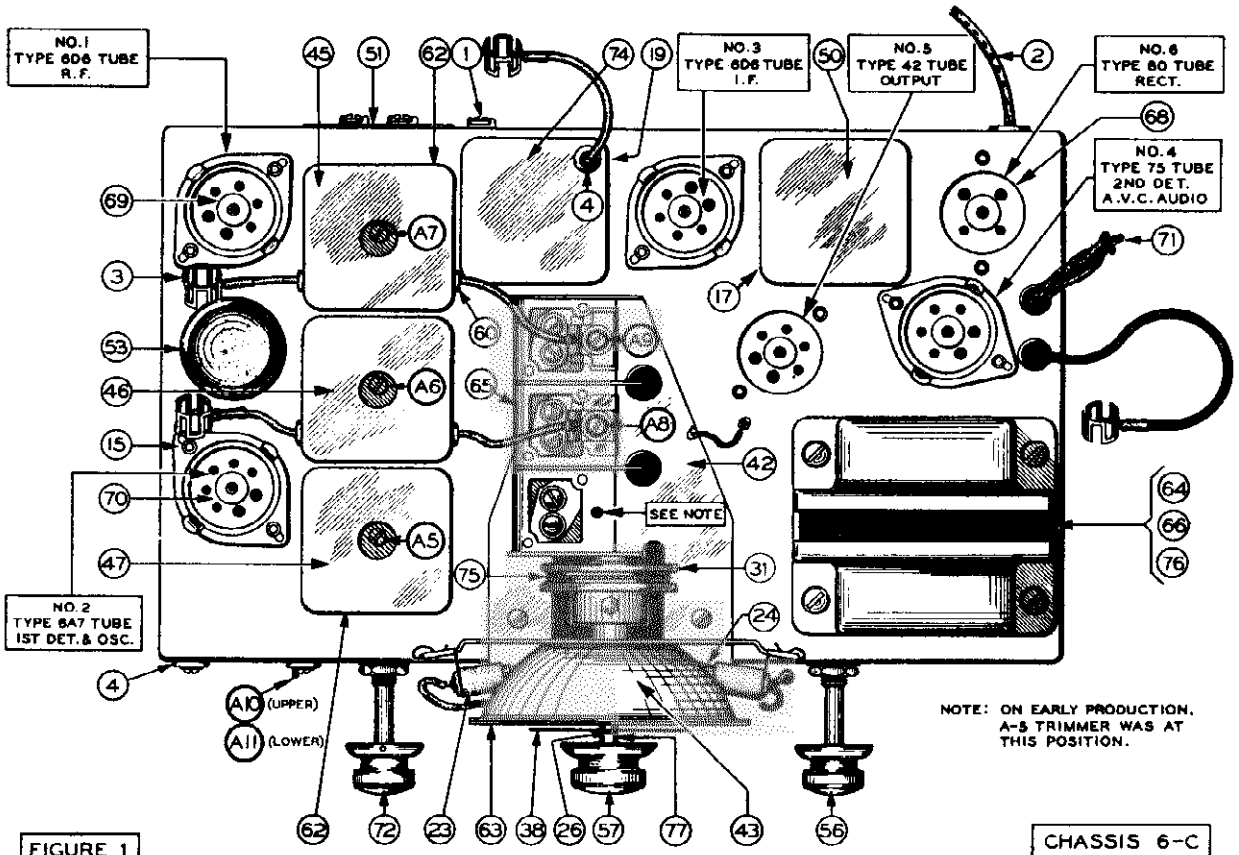

FIGURE 1

CHASSIS 6-C TOP VIEW

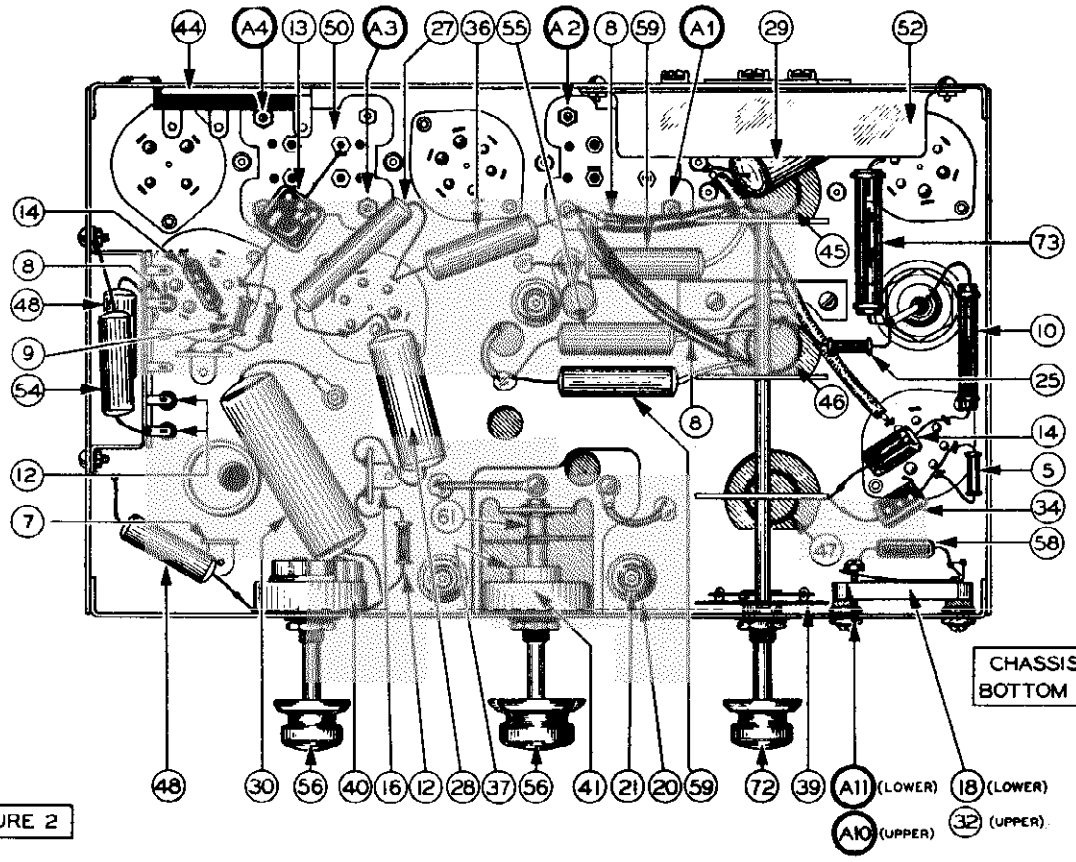

FIGURE 2

CHASSIS 6-C BOTTOM VIEW

©John F. Rider, Publisher

GENERAL HOUSEHOLD UTILITIES CO.

MODELS 680, 681
Chassis 6G, Revised
Schematic, Voltage

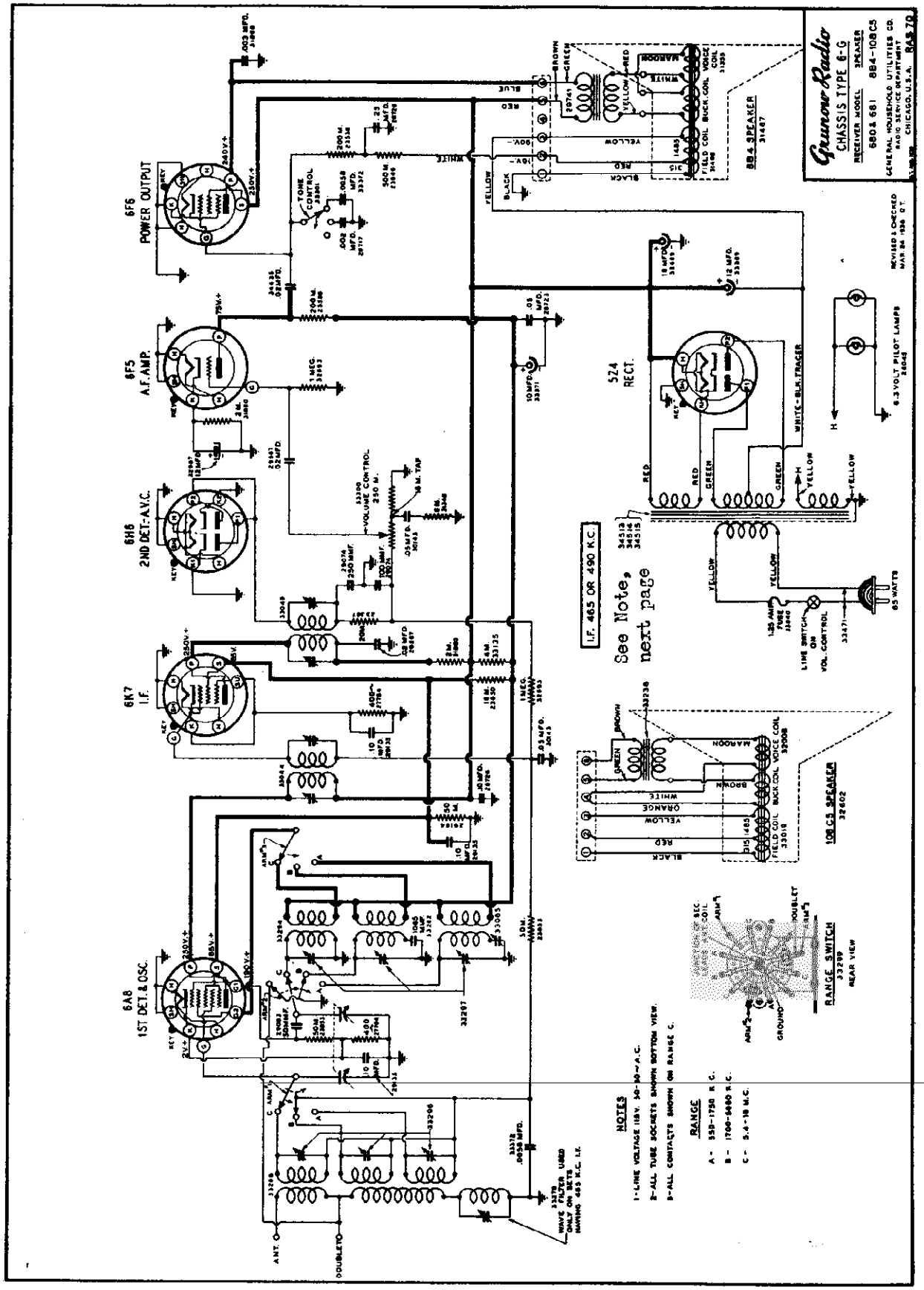

MODELS 680,681 — Chassis,Alignment

Chassis 6G,Revised — GENERAL HOUSEHOLD UTILITIES CO. — Parts List

Socket,Trimmers

PARTS AND PRICE LIST

MODELS 680—681
CHASSIS 6G—6GX—6GZ

Part No.	Description	No. Used	Price
20478	Terminal Clip	1	$ .02
23347	Resistor 20 M Ohm ½ Watt	4	.20
23531	Resistor 200 M Ohm ¼ Watt	2	.15
23849	Resistor 500 M Ohm ¼ Watt	1	.15
23850	Resistor 1 M Ohm 1 Watt	1	.20
23853	Resistor 50 M Ohm ¼ Watt	2	.15
27422	Insulating washer	2	.02
27784	Resistor 400 Ohm ½ Watt	2	.15
27831	Pilot Light socket	2	.10
28045	Pilot lamp	2	.15
28638	Pointer screw	1	.02
28717	.002-700 V Tubular Condenser	2	.25
28723	Condenser .05 Mfd. 400 V Tubular	1	.30
28726	Condenser .1 Mfd. 400 V Tubular	1	.30
28728	Condenser .25 Mfd. 200 V Tubular	1	.35
28793	Junction box connection assem. (681Z & 682Z)	1	1.00
29048	Electrolytic Condenser Strap	1	.03
29074	Dual Condenser 100-150 Mmf.	1	.30
29083	Dual Condenser 50 Mmf. 400 V Tubular	1	.30
29135	Condenser 50 Mfd. 200 V Tubular	3	.25
29204	Resistor 50 M Ohm ½ Watt	1	.15
29208	Speaker cable clamp	1	.02
29376	Drive sleeve	1	.35
29476	Ball race	1	.10
29486	Drive shaft thrust spring	1	.05
29521	3/16 Ball	1	.02
29522	11/32 Ball	2	.02
29524	Spring for Drive String	4	.02
29581	Antenna Binding post assembly	1	.10
29582	Window	1	.10
29583	Window Retaining Ring	1	.15
29584	Cabinet escutcheon	1	.10
29567	Condenser .02 Mfd. 400 V Tubular	2	.60
29612	Escutcheon retaining spring	2	.25
29893	Reflector riveted assembly	1	.20
30083	Reflector mounting bracket	2	.50
30084	Dial Light bracket	1	.15
30092	Terminal board	2	.10
30099	Drive String & Eyelet Assem.	1	.10
30143	Condenser 200 Mfd. 200 V Tubular	2	.35
30152	Oscillator coil board	1	.25
30172	Outer drive shaft	1	.10
30173	Inner drive shaft	1	.10
30182	Coil shield & eyebolt assem.	2	.35
31191	Drive shaft & Bearing assem.	1	.30
31348	Resistor 6 M Ohm ¼ Watt	1	.15
31360	Window gasket	1	.05
31424	Condenser insulating shield	1	.10
31710	Drive drum, hub and gear assem.	1	1.10
31714	Gear spring	2	.05
31726	Pinion, Gear, & Adjusting Plate assem.	1	.55
31739	Rubber Washer for Variable Cond. Mtg.	6	.02
31775	Pointer	1	.10
31777	Terminal Board	1	.10
31860	Resistor 2 M Ohm ½ Watt; 700 V Tubular	2	.15
31868	Condenser .003 Mfd. 700 V Tubular	1	.25
32464	Knob for Control Model 680	3	.20
32465	Knob for Range Switch Model 680	3	.20
32693	Resistor Mtg. 1/3 W	2	.15
32838	Electrolytic Condenser Assem. Strap	4	.25
32987	12 Mfd. 25 V—Dry Electrolytic Cond.	1	.04
33044	1st I. F. Coil & Shield Assem.	1	.75
33049	2nd I. F. Coil & Shield Assem.	1	1.80
33054	Grid Cap	1	1.35
33055	Osc. Padder Condenser (375 Mmf.)	1	.01
33070	Knob for 681 Receiver	3	.40
33071	Knob for 681 Receiver (For Range Switch)	1	.20

Prices subject to change without notice.

Part No.	Description	No. Used	Price
33082	Transformer mounting spacer	4	.03
33135	Resistor 4 M Ohm 1 Watt	1	.20
33282	Condenser 1065 Mmf.	1	.20
33278	Wave Filter & Condenser Assem.	1	.85
33287	Range Switch Mounting Bracket	1	.05
33288	Antenna Coil & Shield Assem.	1	1.45
33292	Shield & Eyebolt Assem.	2	.35
33294	Oscillator Coil & Shield Assem.	1	1.70
33296	Trimmer assem. (Ant.) (Red Dot)	1	.40
33297	Trimmer Assem. (Osc.)	1	.40
33298	Spacer for trimmers	4	.04
33299	Range Switch	1	1.35
33300	Volume control	1	1.05
33301	Tone control switch	1	.45
33303	5 Prong socket (5Z4)	1	.15
33306	9 Prong socket	5	.15
33317	Variable condenser	1	3.00
33367	Decibenomite—Range letters	1	.01
33368	Electrolytic condenser cathode terminal	1	.02
33369	Electrolytic condenser 16 Mfd. 450 V	1	1.20
33371	Condenser .0058 Mfd. 700 V Tubular	1	.25
33469	Electrolytic condenser 16 Mfd. 300 V	2	.25
33471	Attachment Cord	1	1.00
33837	Fuse Clip	1	.40
33839	Armite Insulator	1	.10
33840	Fuse (1¼ amp. blue)	1	.02
33853	Speaker Cable	1	.10
34449	Dial chart	1	.55
34461	Pointer & Pinion assem.	1	.50
34613	Power Transformer 115 V .50-60 cycle	1	.40
34614	Power Transformer 115 V .25-50 cycle	1	5.00
34615	Power Transformer (10-135-220-250 V-50-60 cy.	1	7.00
34438	Condenser .02 Mfd. 400 V Tubular (Audio)	1	7.00
61207	1 x 8-32 Screw Chassis Mtg.	2	.18
61227	1¼ x 8-32 Screw Chassis Mtg.	1	.05
61011	5/16 x 8-32 R.H. Set Screw	2	.01
63014	5/16 x 10-32 Set Screw	2	.02
63839	Felt Washer	4	.02
63863	Flat Washer (Chassis Mtg.)	4	.01

884 SPEAKER

28844	Yoke & Pole Piece Assem.	1	1.20
28849	Spacer	2	.02
29038	Gasket	1	.10
29041	Basket & Front Plate Assem.	1	1.00
29047	Terminal Strip Assem.	1	.20
29051	Terminal Strip Cover	1	.10
29052	Terminal Strip Cover Insulation	1	.05
29741	Output Transformer	1	1.75
29769	Clamp Ring	1	.05
31356	Cone & Voice Coil Assem.	1	1.00
31447	884 Speaker	1	10.00
31448	Field Coil Assem.	1	3.00

108-C-5 SPEAKER

20045	Terminal Strip Cover	1	.15
20046	Terminal Strip Cover Insulation	1	.05
27240	Gasket (Cone)	1	.10
32008	Cone & Voice Coil Assem.	1	1.35
32227	Speaker Pot & Pole Piece Assem.	1	1.50
32228	Speaker Clamp	1	.10
32233	Basket & Front Plate Assem.	1	4.00
32602	108 C 5 Speaker Complete	1	12.50
33019	Field Coil Assem.	1	3.50
33238	Output Transformer Assem.	1	2.25

The following is substituted for the 16-mc. alignment in early models.

16 M.C. ALIGNMENT:

(A) Connect signal lead of test oscillator through 400 Ohm resistor to Antenna binding post of Chassis.

(B) Connect the ground lead to ground terminal of Chassis.

(C) Set range switch to range "C" and turn dial pointer to 16 M.C.

(D) Place test oscillator in operation at 16 M.C.

(E) Adjust set Oscillator Trimmer (A16), Fig. (1), to maximum output.

(F) Adjust Detector Trimmer (A11), Fig. (1), to maximum output.

(G) On the 16 M.C. Oscillator Alignment it will be noted that there are two settings at which the signal will be received. Use the lower of the images for alignment point, that is, the setting giving most capacity or the point at which the trimmer screw is farthest in.

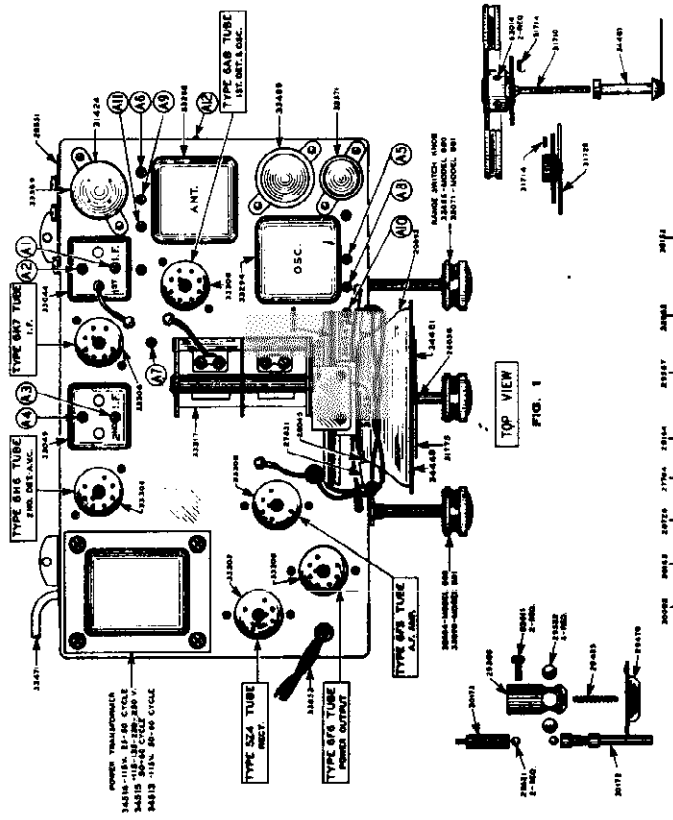

FIG. 1

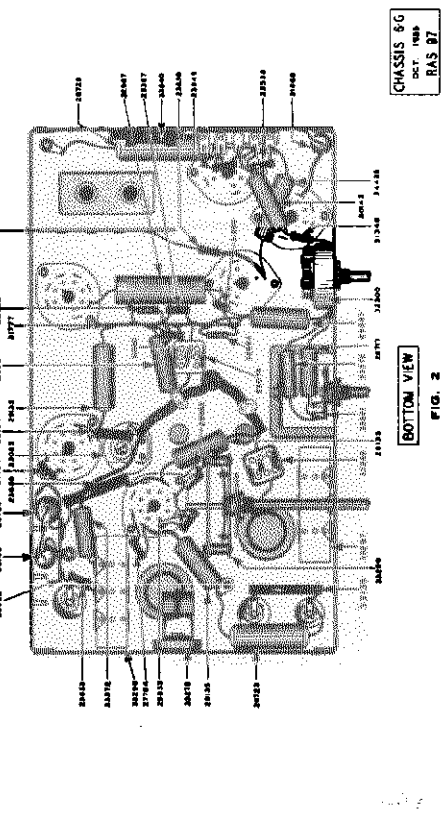

FIG. 2

NOTE—

Due to interference caused by commercial code stations in some locations, it has been necessary to use two different I. F. Frequencies on this Receiver, one of 490 K.C. where code interference is in the neighborhood of 455 K.C. and the other where the interfering stations are operating in the 500 K.C. band, on I. F. of 465 K.C. is used.

©John F. Rider, Publisher

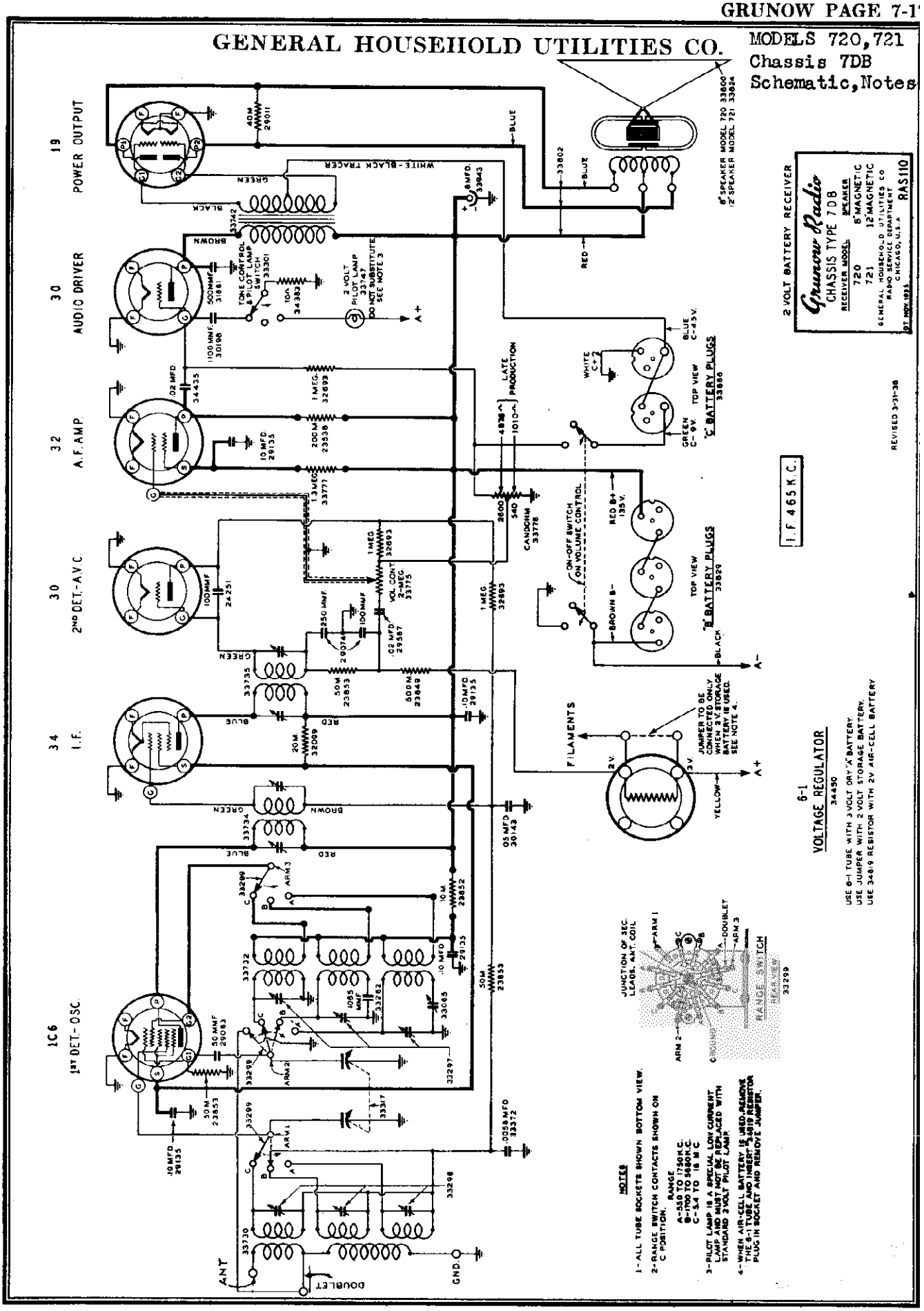

©John F. Rider, Publisher

MODELS 720,721
Chassis 7DB
Socket,Trimmers
Chassis

GENERAL HOUSEHOLD UTILITIES CO.

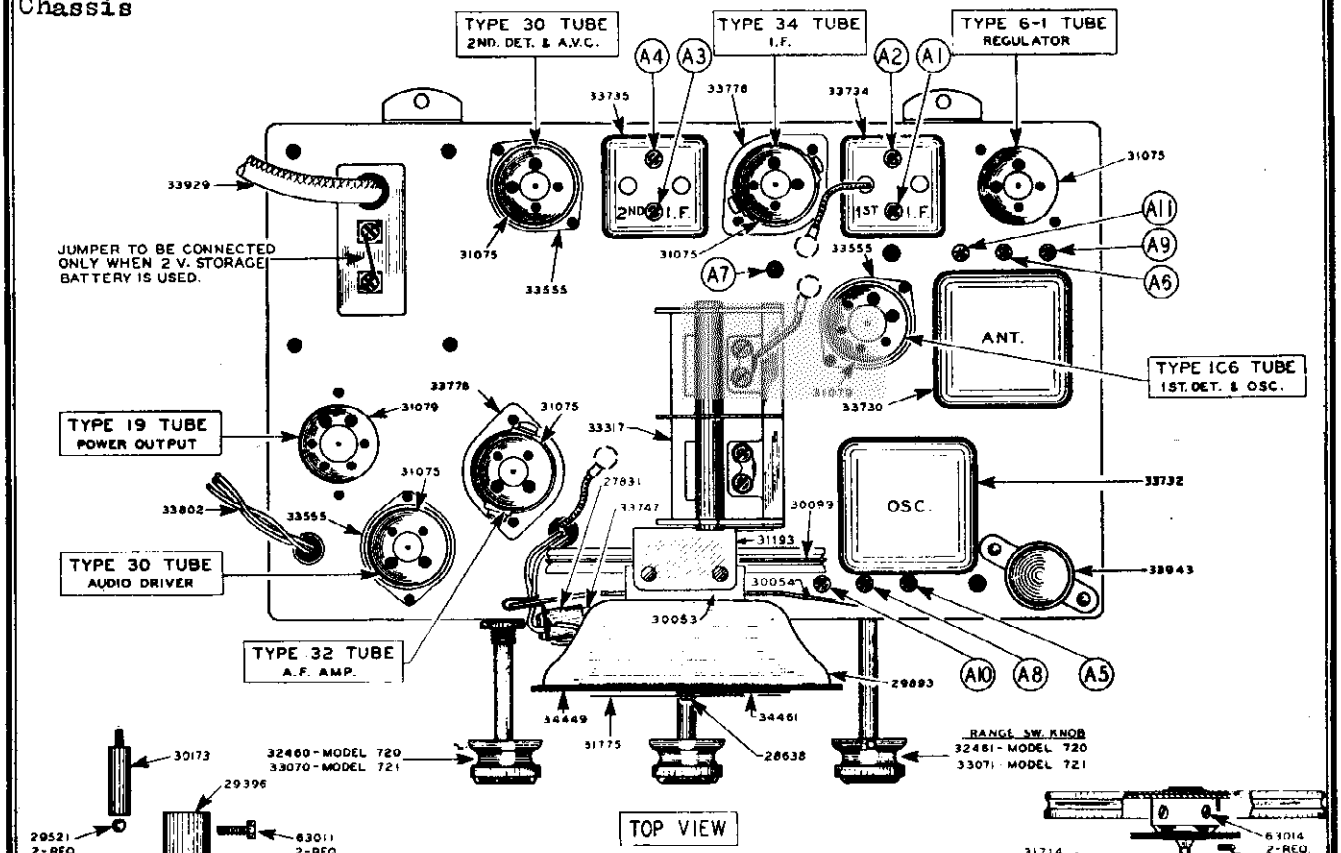

TOP VIEW

FIG. 1

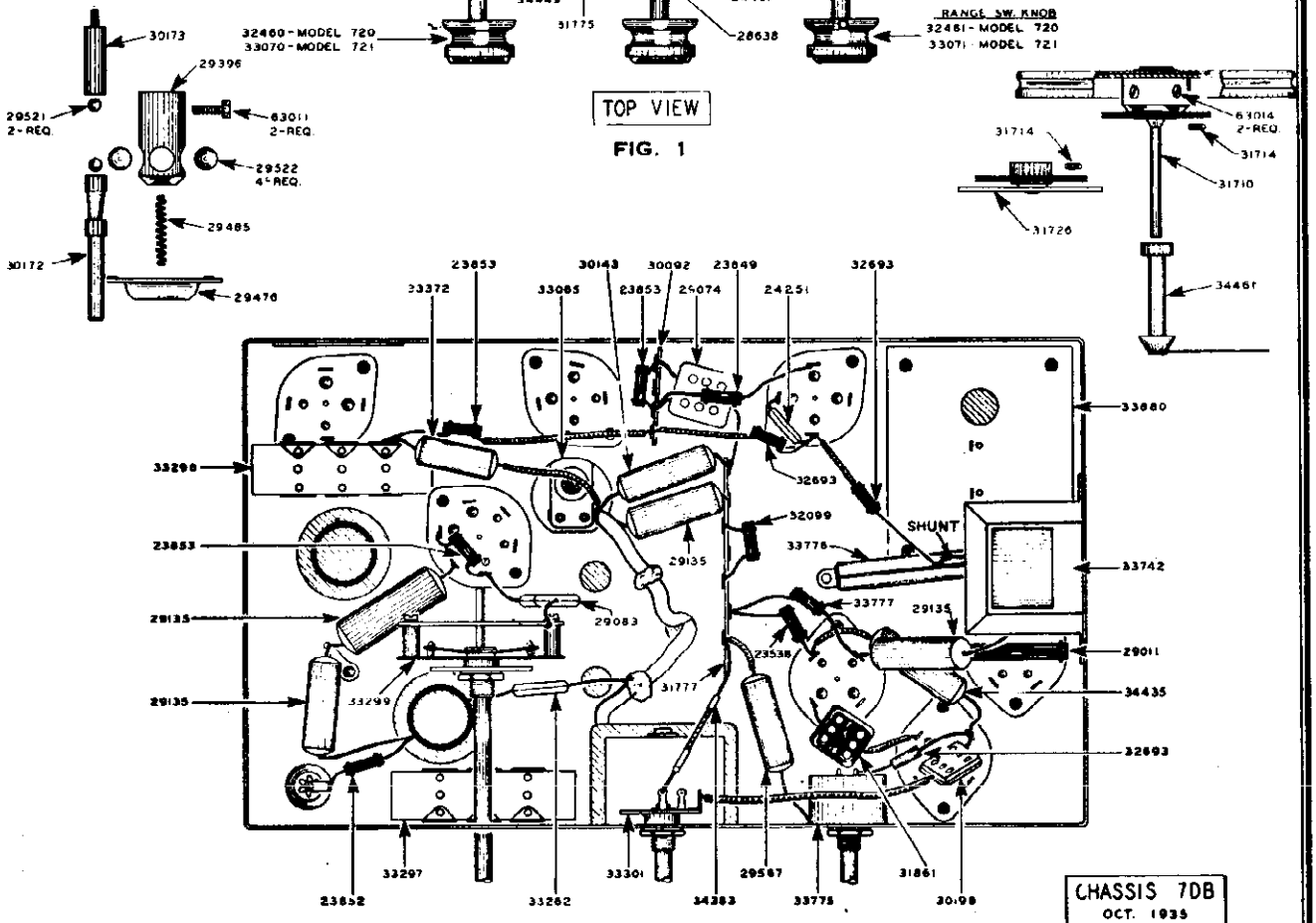

BOTTOM VIEW

FIG. 2

©John F. Rider, Publisher

GENERAL HOUSEHOLD UTILITIES CO.

PARTS AND PRICE LIST

MODELS 720-721
CHASSIS 7DB

Part No.	Description	No. Used	Price
20962	Grid Cap	4	$ .01
23538	Resistor 200M Ohm ¼ Watt	1	.15
23849	Resistor 500M Ohm ¼ Watt	1	.15
23852	Resistor 10M Ohm ¼ Watt	1	.15
23853	Resistor 50M Ohm ¼ Watt	3	.15
24251	Condenser 100 MMF (Mica)	1	.15
27831	Socket, Pilot Light Assem.	1	.10
28638	Screw, Dial Pointer	1	.02
29011	Resistor, 40M Ohm 1 Watt	1	.20
29074	Condenser, 100-250 MMF (Mica) (Dual)	1	.30
29083	Condenser, 50 MMF (Mica)	1	.20
29135	Condenser .1 MFD. 200 V. Tubular	4	.25
29209	Clamp, Speaker Cable (Model 721)	1	.02
29396	Sleeve, Drive	1	.35
29476	Ball Race	1	.10
29486	Spring, Drive Shaft Thrust	1	.05
29521	Balls, 3/16"	2	.02
29522	Balls, 11/32"	4	.02
29524	Spring, Drive String	1	.10
29551	Binding Post, Antenna	1	.10
29552	Window, Dial	1	.15
29553	Ring, Window Retaining	1	.10
29554	Escutcheon	1	.60
29567	Condenser .02 Mfd. 400 V. Tubular	1	.25
29612	Ring Escutcheon, Retaining	1	.20
29893	Reflector Riveted Assembly	1	.80
30053	Bracket, Reflector Mounting	1	.15
30054	Bracket, Pilot Light Mounting	1	.10
30092	Terminal Board, Junction (4 Lug)	1	.10
30099	Drive String & Eyelet Assem.	1	.10
30143	Condenser .05 Mfd. 200 V. Tubular	1	.25
30172	Drive Shaft Outer	1	.35
30173	Drive Shaft, Inner	1	.10
30182	Shield & Eyebolt Assem. (1st & 2nd I. F.)	2	.25
30198	Condenser 1100 MMF (Mica)	1	.25
31075	Socket, 4 Prong	2	.10
31079	Socket, 6 Prong	1	.15
31193	Drive Shaft Bearing Bracket	1	.20
31360	Gasket, Window	1	.05
31710	Drive Drum, Hub & Gear Assem.	1	1.10

Part No.	Description	No. Used	Price
33070	Knob (Model 721)	3	.20
33071	Knob (Range Switch) (Model 721)	1	.20
33262	Condenser 1065 MMF (Mica)	1	.20
33292	Shield Eyebolt Assem. (Ant. & Osc.)	2	.35
33296	Trimmer Assem. (Ant.) Red Dot	1	.40
33297	Trimmer Assem. (Osc.)	1	.40
33299	Range Switch	1	1.35
33301	Tone Control Pilot Light Sw.	1	.45
33317	Condenser (Variable)	1	3.00
33367	Decalcomania, Range Letters	1	.10
33372	Condenser .0058 Mfd. 700 V. Tubular	1	.25
33554	Tube Shield Cap	3	.02
33555	Tube Shield Base	3	.02
33585	Tube Shield Body (Short) (1C6 & 30 tubes)	3	.10
33730	Antenna Coil & Shield Assem.	1	1.65
33732	Oscillator Coil & Shield Assembly	1	1.70
33734	1st I.F. Coil & Shield Assem.	1	1.75
33735	2nd I. F. Coil & Shield Assem.	1	1.35
33742	Transformer, Audio Input	1	1.80
33747	Lamp, Pilot (2V—.06 Amp.)	1	.15
33775	Volume Control	1	1.10
33776	Candohm	1	.50
33777	Resistor 1.3 Megohm ½ Watt	1	.15
33778	Tube Shield Base	2	.02
33779	Tube Shield Body (32 & 34 Types)	2	.10
33802	Cable, Speaker	1	.15
33829	Plug Connector "B"	1	.10
33886	Plug Connector "C"	2	.10
33880	Jumper Term. Board Assy.	1	.25
33929	Cable, Battery	1	1.25
33943	Condenser 8 MFD. 150 V. Wet. Elect.	1	.80
34383	Resistor 10 Ohm ½ Watt. (Flex.)	1	.15
34435	Condenser .02 MFD—400 V. Tubular (Audio)	1	.25
34449	Dial Chart	1	1.50
34450	6-1 Amperite Tube	1	.80
34461	Pointer & Pinion Assembly (Minute Hand)	1	.20
34869	Resistor Plug (for Air Cell)	1	1.00
61207	1 x 8-32 Screw (Chassis Mtg.)	4	.02
63839	Washer, Felt (Under Knobs)	4	.02
63863	Flat Washer (Chassis Mtg.)	4	.01

SPEAKER PARTS

33600	Speaker 8" Magnetic (720)	1	7.75
34347	Motor Drive Assy. with Coil Comp.	1	6.00
34348	Cone and Apex Assy. (720)	1	1.50
34349	Terminal Strip Assy. (720)	1	.15
34350	Coil Assy. (Motor)	1	1.50
33824	Speaker 12" Magnetic (721)	1	9.50
34351	Motor Drive Assy. with Coil Comp. (721)	1	7.50
34352	Cone and Apex Assy. (721)	1	3.00
34353	Terminal Cover Assy. (721)	1	.15
34350	Coil Assy. (Motor)	1	1.50

31714	Spring	2	.05
31726	Pinion Gear & Adjusting Plate Assembly	1	.55
31775	Pointer, Hour Hand	1	.10
31777	Terminal Board Junction (9 Lug)	1	.10
31861	Condenser 500 MMF (Mica)	1	.20
32099	Resistor 20M Ohm ¼ Watt	1	.15
32460	Knob (Model 720)	3	.20
32461	Knob (Range Switch) (Model 720)	1	.20
32597	Cabinet (Model 720)	1	
32598	Cabinet (Model 721)	1	
32693	Resistor 1 Meg. Ohm 1/3 W. Insul.	3	.15
32858	Mtg. Foot Assy. Rubber	4	.25
32865	Clamp, Elect. Mtg. (1")	1	.05
33065	Condenser, Osc. Padder 375 MMF	1	.40

Prices subject to change without notice.

SERVICE DATA

CONTINUITY AND VOLTAGE

Continuity and voltage readings should be taken from the underside of the chassis. The values given on the schematic diagram are average and allow the service man to make a quick check of the chassis constants. The socket layouts given on the schematic diagram show each socket from the underside.

THE RANGE SWITCH

The Range switch is a simple four pole triple throw switch with its contacts in a convenient position over the coil forms allowing operation with very short wire leads.

CIRCUIT ALIGNMENT PROCEDURE

Do not attempt to align the 7DB Chassis without proper equipment. Alignment condensers are shown in the accompanying illustrations, and are numbered in order of procedure.

1. EQUIPMENT:

(A) Test Oscillator.

A modulated Oscillator capable of producing signals at the I.F., Broadcast and Short-Wave frequencies is necessary for alignment of the 7DB Chassis.

(B) Insulated Screw Driver—(All bakelite or fibre) about 6" long.

(C) Output Meter.

This may be any of the standard Output Meters, but should be sufficiently sensitive to provide a good deflection at low signal strength.

(D) Coupling Means.

Couplings Condensers of 200 mmf., .25 mfd., and a 400 Ohm resistor should be used when coupling oscillator to receiver during alignment as specified in the procedure.

(E) The receiver should be aligned in a location free from local interference (interference caused by motors, flashers, automobile ignition, etc.) as high frequency disturbances will cause difficulties when the short wave section is being adjusted. (A screen room is to be recommended.)

2. DIAL SETTING:

Turn dial knob until condensers are fully meshed. The dial pointer (Hour Hand) should be on the horizontal line of the dial, pointing to 9 and 3 o'clock. The minute hand should be at 12 o'clock or in a vertical position.

3. I. F. ALIGNMENT:

(A) Connect signal lead of test oscillator to grid of 1C6 (1st Detector tube) through .25 mfd., condenser. Connect the ground lead to the chassis.

(B) Set Dial Pointer to 1400 K.C. and range switch on position "A".

(C) Place test Oscillator in operation at 465 K.C. Turn receiver volume control and tone control to maximum.

(D) Attenuate test Oscillator output to lowest value, consistent with obtaining a readable indication on output meter.

(E) Adjust four I.F. Trimmers, A1, A2, A3, A4 located on the I. F. Transformers on top of Chassis. Fig. (1), until maximum output is obtained. During alignment, maintain as low a value of signals as will allow obtaining of accurate adjustment.

4. 1400 K.C. ALIGNMENT:

(A) Connect signal lead of test oscillator through 200 mmf. condenser to Antenna Connection.

(B) Connect the test oscillator ground lead to the ground connection of chassis.

(C) Place test oscillator in operation at 1400 K.C.

(D) Turn dial pointer to 1400 K.C.

(E) Turn range switch to range "A".

(F) Adjust broadcast oscillator trimmer A5, Fig. (1), to maximum output.

(G) Adjust 1st Det. Trimmer (A6), Fig. (1), to maximum output.

5. 600 K.C. ALIGNMENT.

(A) Place test oscillator in operation at 600 K.C.

(B) Tune in signal to maximum (this point does not have to be exactly at 600 K.C. dial setting).

(C) Adjust the 600 K.C. Padding Condenser (A7), Fig. (1), (which is on top of Chassis to the rear of variable condenser) in direction of signal increase. At same time rock the tuning condenser back and forth through resonance while adjusting padding condenser until maximum output is obtained.

6. RECHECK 1400 K.C. ALIGNMENT.

7. 5000 K.C. ALIGNMENT:

(A) Set range switch at "B".

(B) Place test Oscillators in operation at 5000 K.C.

(C) Turn Dial Pointer to 5000 K.C.

(D) Adjust Set Oscillator Trimmer (A8), Fig. (1), to maximum output.

(E) Adjust Detector Trimmer (A9) Fig. (1) to maximum output.

8. 18 M.C. ALIGNMENT:

(A) Connect signal lead of test oscillator through 400 Ohm resistor to Antenna connection of Chassis.

(B) Connect the ground lead to ground terminal of Chassis.

(C) Set range switch to range "C" and turn dial pointer to 18 M.C.

(D) Place test oscillator in operation at 18 M.C.

(E) Adjust set Oscillator Trimmer (A10), Fig. (1), to maximum output.

(F) Adjust Detector Trimmer (A11), Fig. (1), to maximum output.

(G) On the 18 M.C. Oscillator Alignment it will be noted that there are two settings at which the signal will be received. Use the lower of the images for alignment point, that is, the setting giving most capacity or the point at which the trimmer screw is farthest in.

©John F. Rider, Publisher

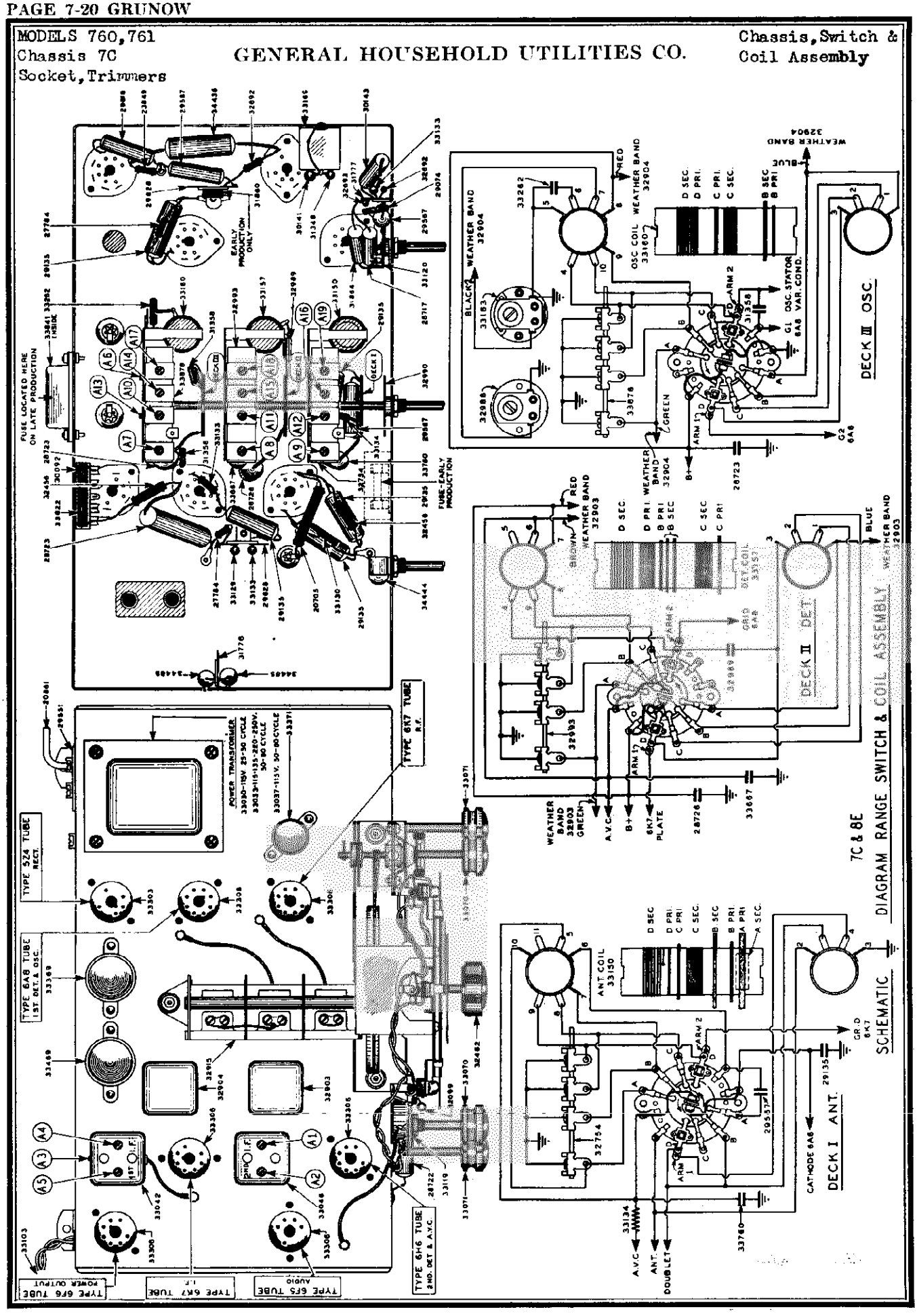
MODELS 760,761
Chassis 7C
Socket, Trimmers
GENERAL HOUSEHOLD UTILITIES CO.
Chassis, Switch & Coil Assembly
DECK III OSC.
DECK II DET.
DECK I ANT.
7C & 8E
DIAGRAM RANGE SWITCH & COIL ASSEMBLY
SCHEMATIC
TYPE 5Z4 TUBE RECT.
TYPE 6A8 TUBE 1ST DET. & OSC.
TYPE 6K7 TUBE I.F.
TYPE 6Q6 TUBE 2ND. DET. & A.V.C.
TYPE 6K7 TUBE R.F.
TYPE 6F6 TUBE POWER OUTPUT
TYPE 6F5 TUBE AUDIO
POWER TRANSFORMER
FUSE LOCATED HERE ON LATE PRODUCTION
FUSE-EARLY PRODUCTION
EARLY PRODUCTION ONLY
OSC. COIL WEATHER BAND 32904
ANT. COIL 33150
WEATHER BAND 32903
WEATHER BAND 32904
OSC. STATOR VAR. COND.
CATHODE 6A8
A.V.C.
ANT.
DOUBLET
B+
6K7 PLATE
G1 6A8
G2 6A8
GR. D 6K7

GENERAL HOUSEHOLD UTILITIES CO.

MODELS 760,761
Chassis 7C
Schematic, Voltage

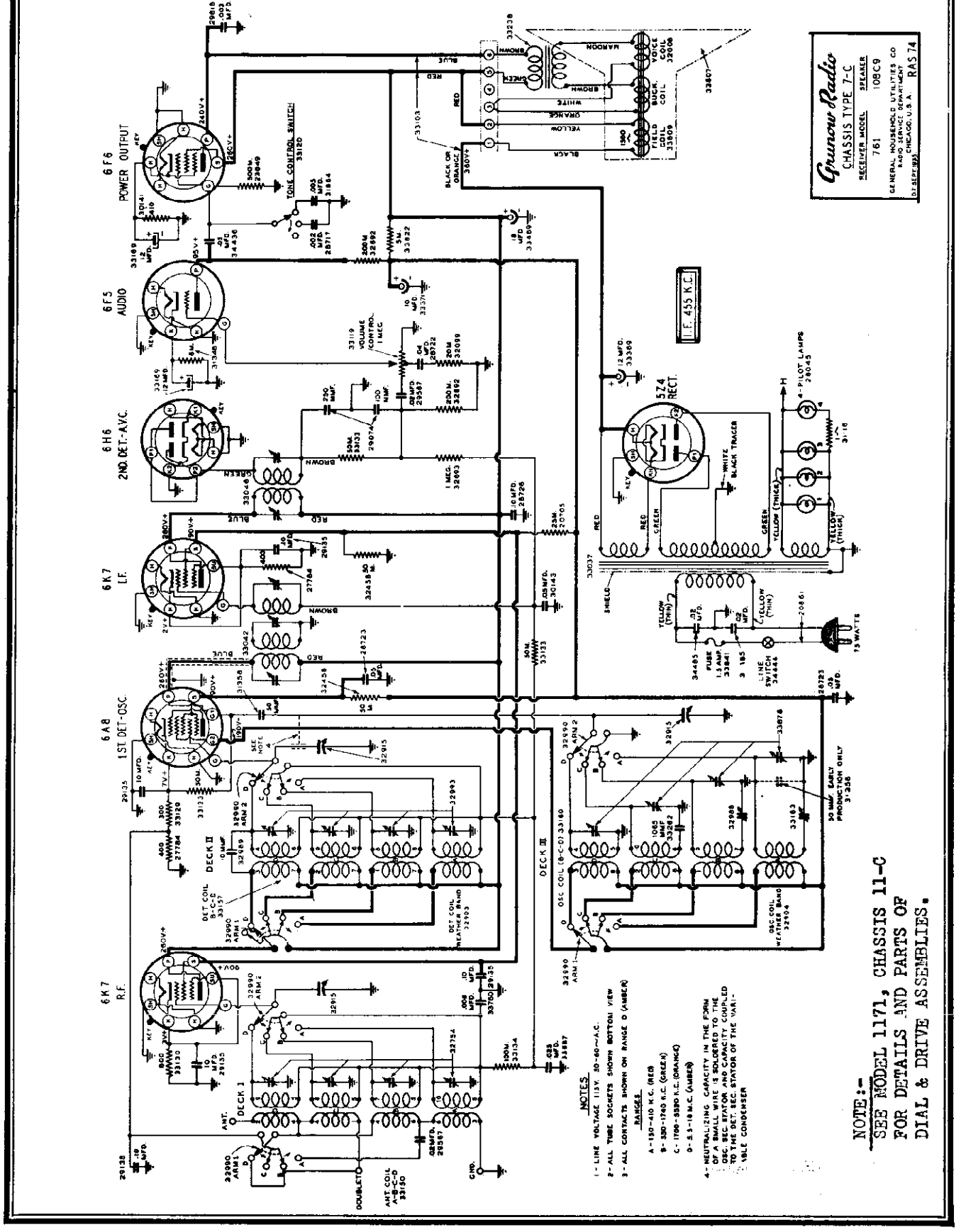

NOTE:-
SEE MODEL 1171, CHASSIS 11-C
FOR DETAILS AND PARTS OF
DIAL & DRIVE ASSEMBLIES.

MODELS 760,761
Chassis 7C
Alignment,Parts

GENERAL HOUSEHOLD UTILITIES CO.

PARTS AND PRICE LIST

Models 760-761 Chassis 7C

PART NUMBERS ARE GIVEN ON THE ILLUSTRATIONS AND THE NUMBERS ARE BROUGHT DOWN IN NUMERICAL ORDER FOR CONVENIENCE

Part No.	Description	No. Used	Price
20705	Resistor, 25 M Ohms 1 Watt	1	$ .20
20861	Line Cord and Plug	1	.40
23638	Resistor, 200 M Ohms ½ Watt	2	.15
23849	Resistor, 500 M Ohms ½ Watt	1	.15
23853	Resistor, 50 M Ohms ½ Watt	2	.15
27784	Resistor, 400 Ohms ½ Watt	2	.15
27831	Pilot Light Socket Assembly	3	.10
28046	Pilot Lamp—6-8 Volt	4	.15
28638	Dial Pointer Screw	1	.02
28717	Condenser, .002 Mfd., 700 V. Tubular	1	.25
28722	Condenser, .04 Mfd., 400 V. Tubular	1	.25
28723	Condenser, .05 Mfd., 400 V. Tubular	2	.25
28726	Condenser, .1 Mfd., 400 Y. Tubular	1	.30
29074	Condenser, 250-100 Mmf. Mica	1	.30
29126	Condenser, .1 Mfd., 200 Volt Tubular	5	.25
29209	Speaker Cable Clamp	1	.02
29522	Bell 11/32 (Drive Mechanism)	4	.02
29551	Antenna & Doublet Binding Post	1	.10
29567	Condenser .02 Mfd., 400 Volt Tubular	3	.25
29628	Vertical Terminal Assem.	2	.10
29818	Condenser, .003 Mfd., 700 V. Tubular	1	.25
30092	Terminal Board (4 Terminals)	1	.10
30141	Resistor, 410 Ohms 1 Watt	1	.20
30143	Condenser, .05 Mfd. 200 Volt Tubular	1	.25
30182	Shield—2nd I.F.	1	.25
31116	Resistor, 1 Ohm (Chunkie)	1	.20
31348	Resistor, 6M Ohms ½ Watt	1	.15
31358	Condenser, 50 Mmf. Mica	1	.20
31714	Gear Tension Spring	2	.05
31739	Rubber Mtg. Washer (Var. Cond.)	6	.02
31777	Terminal Board	1	.10
31778	Terminal Board	1	.10
31860	Resistor, 2M Ohms ½ Watt	1	.15
31864	Condenser, .005 Mfd., 700 V. Tubular	1	.25
32099	Resistor, 20M Ohms ½ Watt	2	.15
32464	Resistor, 80M Ohms ½ Watt	2	.15
32462	Knob (Range Switch)	1	.30
32592	Cabinet (761)	1	
32624	Baffle (Ravometer)	1	2.50
32692	Resistor, 200M Ohms 1/3 Watt (Inc.)	2	.15
32693	Resistor, 1 Megohm 1/3 Watt (Inc.)	1	.15
32754	Trimmer Assem., 4 Gang (Ant. Coil)	1	.50
32968	Mounting Foot Assem. (Rubber)	4	.25
32985	Electrolytic Condenser Strap	3	.05
32879	Cam for Dial Indicator	1	.05
33070	Knob, Vol. Cont. & Sta. Selector	2	.20
33071	Knob, Tone Cont. & Line Switch	2	.20
33072	Cabinet Escutcheon	1	.20
33073	Escutcheon Retaining Spring	1	.20
33074	Dial Window	1	.20
33075	Window Retaining Ring	1	.10
33076	Window Gasket	1	.10
33103	Speaker Cable Assem.	1	.20
33109	Coil Shield [Weather Band]	2	.30
33120	Tone Control Switch	1	.50
33119	Volume Control	1	.90
33129	Resistor, 300 Ohms ½ Watt	1	.15
33130	Resistor, 600 Ohms ½ Watt	1	.15
33133	Resistor, 50M Ohms, ½ Watt	3	.15
33134	Resistor, 100M Ohms, 1/3 Watt	1	.15
33150	Antenna Coil	1	3.60
33157	Detector Coil	1	2.75
33160	Oscillator Coil	1	1.75
33163	W. B. Padder Condenser	1	.35
33169	Condenser, 12 Mfd. Dual 25 V. Dry Electrolytic	1	1.00
33179	Band Indicator—Amber	1	.10
33180	Band Indicator—Orange	1	.10
33181	Band Indicator—Red	1	.10
33182	Band Indicator—Green	1	.10
33262	Condenser, 1066 Mmf. Mica	1	.20
33303	6 Prong Socket 6Z4	1	.15
33306	8 Prong Socket	6	.15
33369	Condenser, 12 Mfd., 450 Volt Wet Electrolytic	1	1.30
33371	Condenser, 10 Mfd., 250 Volt Wet Electrolytic	1	.85
33419	Pilot Light Socket Assem.	1	.15
33469	Condenser, 18 Mfd., 300 Volt Wet Electrolytic	1	.90
33618	Tone Control Switch Only	1	1.20
33647	Decalcomania—Gold Det.	2	.10
33659	Light Shield Cover	1	.10
32880	Shield for Range Switch Coil	1	.75
32903	Det. Coil & Shield [Weather Band]	1	1.35
32904	Osc. Coil & Shield [Weather Band]	1	1.25
32915	Variable Condenser	1	3.70
32917	Condenser Mtg. Foot [Rear]	1	.06
32918	Reflector Bracket Support	1	.10
32919	Drive Drum, Hub & Gear Assem.	1	.75
32924	Sleeve & Gear Assem.	1	.50
32927	Drive Shaft	1	.40
32928	Clutch Pin	1	.10
32930	Drive Mtg. Frame	1	.08
32931	½" Ball [Drive Mechanism]	15	.01
32933	Toggle Arm [Drive]	1	.05
32934	Toggle Spring	2	.05
32935	Drive String & Eyelet Assy.	1	.10
32936	Reflector Bracket	1	.08
32937	Pinion, Gear and Adjustable Plate Assem.	1	.70
32940	Pointer Pinion	1	.20
32950	Reflector Mask	1	.25
32962	Dial Frame Welded Assem.	1	.30
32957	Shutter Spring	2	.02
32959	Glass Clock Dial	1	1.40
32963	Dial Chart	1	.40
32966	Shutter	1	.10
32968	Shutter Tension Spring	1	.05
32969	Spring Connecting Link	1	.01
32970	Spacer for Dial Assem.	2	.03
32972	Minute Hand Pointer	1	.10
32978	Drive Spring	1	.10
32982	"Hour" Hand Pointer	1	.10
32986	Light Shield	1	.10
32988	Padder Condenser [Broadcast]	1	.35
32989	Condenser, 10 Mmf. [Mica]	1	.20
32990	Range Switch	1	4.25
32993	Trimmer Assem., 4 Gang [Det. Coil]	1	.50
33030	Power Transformer, 115 Volt, 25-50 Cycle	1	12.00
33033	Power Transformer, 110-120-220-250 Volt, 50-60 Cycle	1	17.00
33037	Power Transformer, 115 Volt, 50-60 Cycle	1	8.00
33042	1st I.F. Coil & Shield Assem.	1	2.50
33046	2nd I.F. Coil & Shield Assem.	1	2.00
33053	Shield 1st I.F.	1	.30
33084	Grid Cap	4	.01
33650	Dial Assembly [Etched]	1	2.15
33667	Condenser, .025 Mfd. 400 V. Tubular	1	.25
33822	Resistor, 5M Ohms 1 Watt	1	.20
33831	Fuse Clip [Early Production]	1	.10
33834	Terminal Mounting Strip [Single Lug]	1	.10
33837	Fuse Clip Assembly	1	.10
33841	Fuse (1½ Amp.)	1	.10
33878	Trimmer Assem., 4 Gang [Osc. Coil]	1	.50
34401	Drive Mechanism	1	1.00
34436	.05 Mfd., 400 Volt Tubular Cond.	1	.35
34444	Line Switch	1	.45
34469	Fuse Cover	1	.10
34478	Fuse Cover Liner	1	.05
34471	Fuse Clip (Late production)	1	.20
34485	.02 Mfd. 400 V. Moulded Paper Cond.	2	.35
63928	Felt Washer [Knobs]	5	.02
63001	13/32 x No. 10-32 H. H. Set Screw	1	.05
63006	¼ x 10-32 H. H. Set Screw	2	.01
63928	Felt Washer [Drive Shaft]	1	.02
63963	Flat Washer [Chassis Mtg.]	4	.01
63207	1" x 8-32 Screw [Chassis Mtg.]	4	.01
65337	Eyelet [Dial Assy.]	1	.02

PRICES SUBJECT TO CHANGE WITHOUT NOTICE

SPEAKER PARTS

TYPE 108C9

Part No.	Description	No. Used	Price
20095	Terminal Strip Cover	1	.15
20047	Terminal Strip	1	.10
27216	Transformer Bracket	1	.20
27240	Cone Mtg. Gasket	1	.10
33008	Cone & Voice Coil Assem.	1	1.95
32227	Pot & Pole Piece Assem.	1	1.50
32228	Speaker Clamp	1	.10
33238	Output Trans.	1	2.25
33232	Basket & Front Plate Assem.	1	2.85
33807	108C9 Speaker Complete	1	16.00
33809	Field Coil	1	2.60

SERVICE DATA

CONTINUITY AND VOLTAGE

Continuity and voltage readings should be taken from the underside of the chassis. The values given on the schematic diagram are average and allow the service man to make a quick check of the chassis contents. The socket layouts given on the schematic diagram show each socket from the underside.

THE RANGE SWITCH

The Range Switch is a simple three deck multiple pole, positive acting switch, used to connect the various coils into their proper circuits, and is designed in such a way that the coils being used are isolated from coils of the two succeeding bands of a lower frequency. In the case of the detector circuit both the higher and lower frequency bands, above and below the circuit selected, are shorted out. This switching arrangement not only selects the proper coils for each band, but grounds the unused section, allowing the receiver to work at maximum sensitivity and selectivity on all four ranges.

The Range Switch and Coil Assembly is shown schematically in figure (3) and it will be noted that deck I (Antenna) is the one toward the front of the chassis, deck II (Detector) in the center position and deck III (Oscillator) toward the rear of the chassis. The diagram shows the exact position of the coil and switch lugs, and little difficulty should be experienced in making any necessary repairs or inspection.

CIRCUIT ALIGNMENT PROCEDURE

Do not attempt to align the 7C Chassis without proper equipment. Alignment condensers are shown in the accompanying illustrations, and are numbered in order of procedure — I.F. Condensers on top and side of the I.F. Transformers.

1. EQUIPMENT:

(A) Test Oscillator.

A modulated Oscillator capable of producing signals at the I.F., Broadcast, Short Wave, and weather Band frequencies is necessary for alignment of the 7C Chassis.

(B) Insulated Screw Driver — (all bakelite or fibre) about 6" long.

(C) Output Meter.

This may be any of the standard Output Meters, but should be sufficiently sensitive to provide a good deflection at low signal strength.

(D) Coupling Means.

Coupling Condensers of 200 mmf., .25 mfd., and a 400 Ohm resistor should be used when coupling oscillator to receiver during alignment as specified in the procedure.

(E) The receiver should be aligned in a location free from local interference [interference caused by motors — flashers — automobile ignition, etc.] as high frequency disturbances will cause difficulties when the short wave section is being adjusted. [A screen room is to be recommended.]

2. DIAL SETTING:

Turn dial knob until condensers are fully meshed. The dial pointer [Hour hand] should be on the horizontal line of the dial, pointing to 9 and 3 o'clock.

The minute hand should be at 12 o'clock or in a vertical position.

3. I.F. ALIGNMENT:

(A) Connect signal lead of test oscillator to grid of 6A8 [1st detector tube] through .25 mfd. condenser. Connect the ground lead to the chassis.

(B) Before any adjustment of circuit constants is attempted, allow the chassis to "heat up" to normal operating temperature. This heating period should take from 20 to 30 minutes and is necessary to allow all coils and condensers to reach their normal temperatures so that when alignment is completed, there will be no inductance or capacity changes due to thermal expansion or contraction.

It is good to remember this heating condition when logging stations — that is, do not attempt to log or tune in a station previously logged on a "cold" chassis, as the station being tuned in would "drift" and the calibration on the previously logged station would be incorrect.

(C) Set Dial pointer to 1400 K.C. and range switch on "Green" [No. 2] position.

(D) Place test Oscillator in operation at 455 K.C. Turn receiver volume control and tone control to maximum.

(E) Attenuate test Oscillator output to lowest value, consistent with obtaining a readable indication on output meter.

(F) Adjust the five I.F. Trimmers, A1, A2, A3, A4, A5, located on the I.F. Transformers on top of chassis Fig. (1), until maximum output is obtained. During alignment, maintain as low a value of signal as will allow obtaining of accurate adjustment.

4. 175 K.C. ALIGNMENT:

(A) Connect signal lead of test oscillator through 200 mmf. Condenser to Antenna binding post on Chassis.

(B) Connect the test oscillator ground lead to the ground post of chassis.

(C) Place test oscillator in operation at 175 K.C.

(D) Tune in signal to maximum [this point does not have to be exactly at 175 K.C. dial setting] range switch on "Red" [No. 1] position.

(E) Adjust the 175 K.C. Padding Condenser [A6] Fig. 2 [which is on rear of Chassis] in direction of signal increase. At the same time rock the tuning condenser back and forth through resonance while adjusting padding condenser, until maximum output is obtained.

5. 250 K.C. ALIGNMENT:

(A) Place test oscillator in operation at 250 K.C.

(B) Turn dial pointer to 250 K.C.

(C) Turn range switch to "Red" [No. 1] position.

(D) Adjust "weather Band" oscillator trimmer [A7] Fig. 2, to maximum output.

(E) Adjust Detector Trimmer [A8] Fig. 2, to maximum output.

(F) Adjust Antenna Trimmer [A9] Fig. 2, to maximum output.

6. RECHECK 175 K.C. PADDER CONDENSER — See 4 — above.

7. 1400 K.C. ALIGNMENT:

(A) Place test oscillator in operation at 1400 K.C.

(B) Turn dial pointer to 1400 K.C.

(C) Turn range switch to range "Green" [No. 2] position.

(D) Adjust broadcast oscillator trimmer [A10] Fig. 2, to maximum output.

(E) Adjust 1st Det. Trimmer [A11] Fig. 2, to maximum output.

(F) Adjust Antenna Trimmer [A12] Fig. 2, to maximum output.

8. 600 K.C. ALIGNMENT:

(A) Place test Oscillator in operation at 600 K.C.

(B) Tune in signal to maximum [this point does not have to be exactly at 600 K.C. dial setting.]

(C) Adjust the 600 K.C. Padding Condenser [A13], Fig. 2, which is on rear of Chassis, in direction of signal increase. At same time rock the tuning condenser back and forth through resonance while adjusting padding condenser until maximum output is obtained.

9. RECHECK 1400 K.C. ALIGNMENT: See 7 above.

10. 6000 K.C. ALIGNMENT:

(A) Set range switch to "Orange" [No. 3] position.

(B) Place test Oscillators in operation at 6000 K.C.

(C) Turn dial pointer to 6000 K.C.

(D) Adjust Set Oscillator Trimmer [A14], Fig. 2, to maximum output.

(E) Adjust Detector Trimmer [A15] Fig. 2, to maximum output.

(F) Adjust Antenna Trimmer [A16], Fig. 2, to maximum output.

11. 18 M. C. ALIGNMENT:

(A) Connect signal lead of test oscillator through 400 Ohm resistor to Antenna binding post of Chassis.

(B) Connect the ground lead to ground terminal of Chassis.

(C) Set Range Switch to "Amber" [No. 4] position and turn dial pointer to 18 M.C.

(D) Place Test Oscillator in operation at 18 M.C.

(E) Adjust set oscillator Trimmer [A17] Fig. 2, to maximum output.

(F) Adjust Detector Trimmer [A18] Fig. 2, to maximum output.

(G) Adjust Antenna Trimmer [A19] Fig. 2, to maximum output.

(H) On the 18 M.C. Oscillator Alignment it will be noted that there are two settings at which the signal will be received. Use the lower of the images for alignment point, that is, the setting giving most capacity or the point at which the trimmer screw is farthest in.

©John F. Rider, Publisher

NOTE:-
SEE MODEL 760, CHASSIS 7-C FOR SCHEMATIC OF RANGE SWITCH ASSEMBLY.

SEE MODEL 1171, CHASSIS 11-C FOR DETAILS AND PARTS OF DIAL & DRIVE ASSEMBLIES.

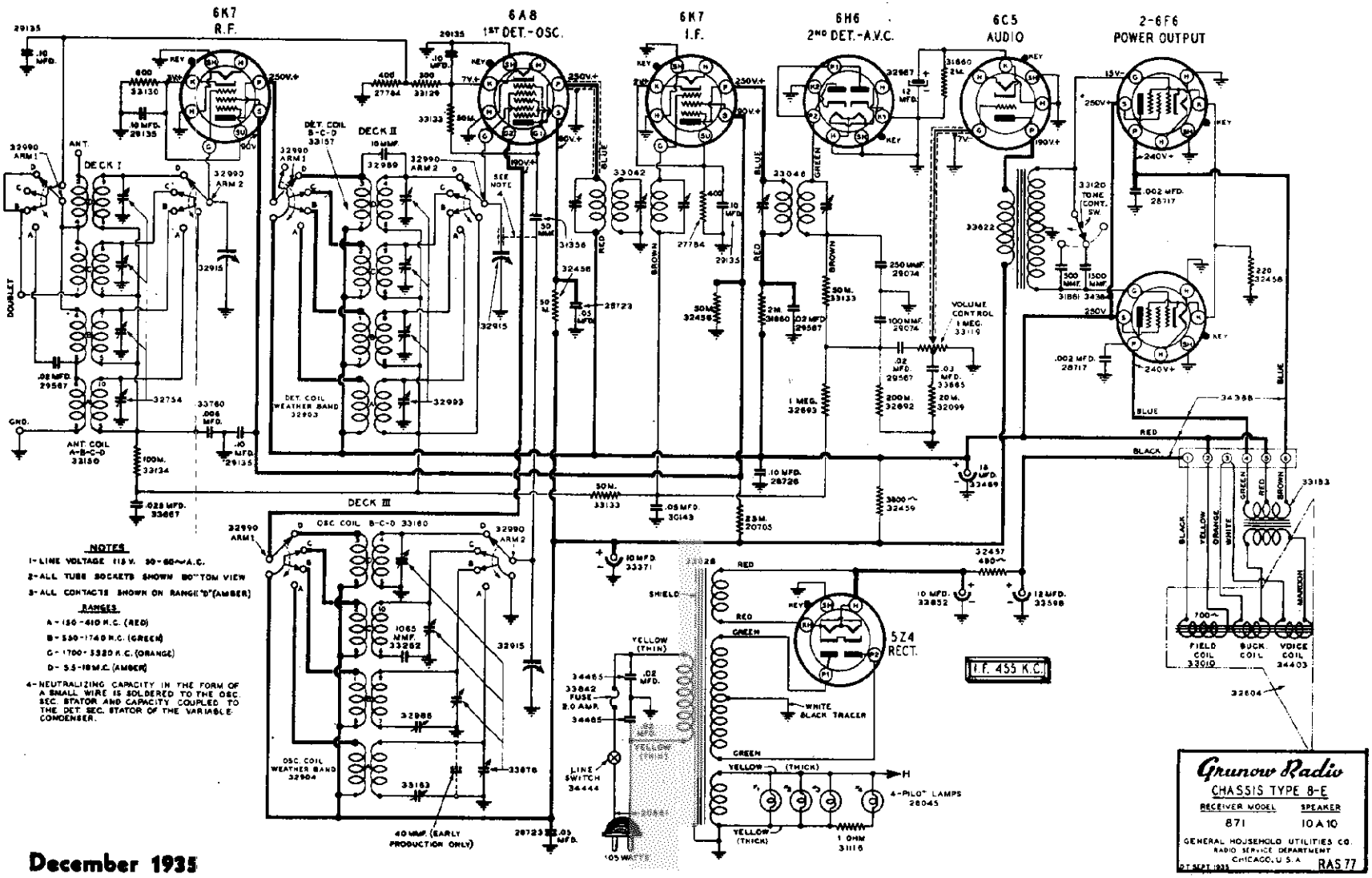

Grunow Radio
CHASSIS TYPE 8-E

RECEIVER MODEL	SPEAKER
871	10A10

GENERAL HOUSEHOLD UTILITIES CO.
RADIO SERVICE DEPARTMENT
CHICAGO, U.S.A.
RAS 77
DT SEPT 1935

December 1935

GENERAL HOUSEHOLD UTILITIES CO.

MODEL 871
Chassis 8E
Schematic
Voltage

GRUNOW PAGE 7-2

MODEL 871
Chassis 8E
Socket, Trimmers
Chassis

GENERAL HOUSEHOLD UTILITIES CO.

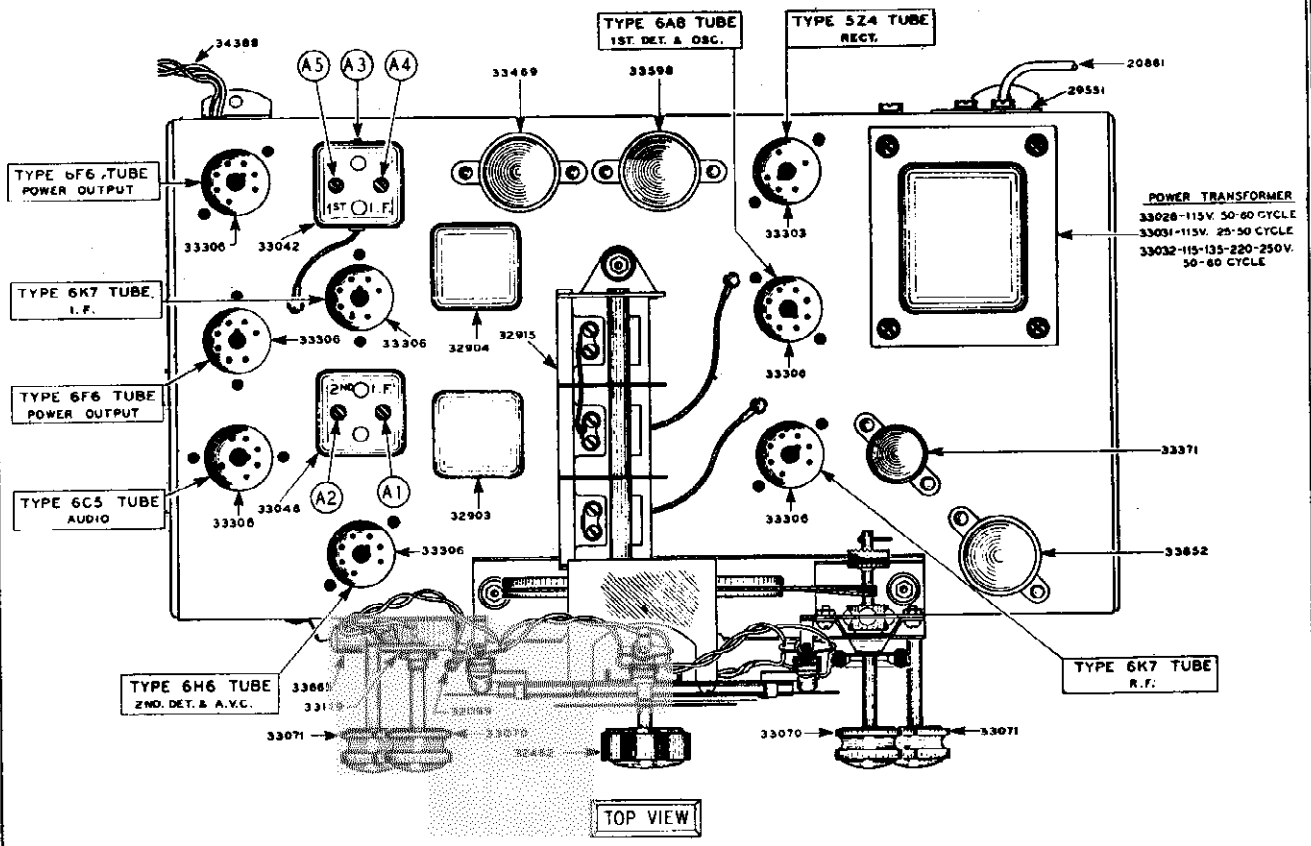

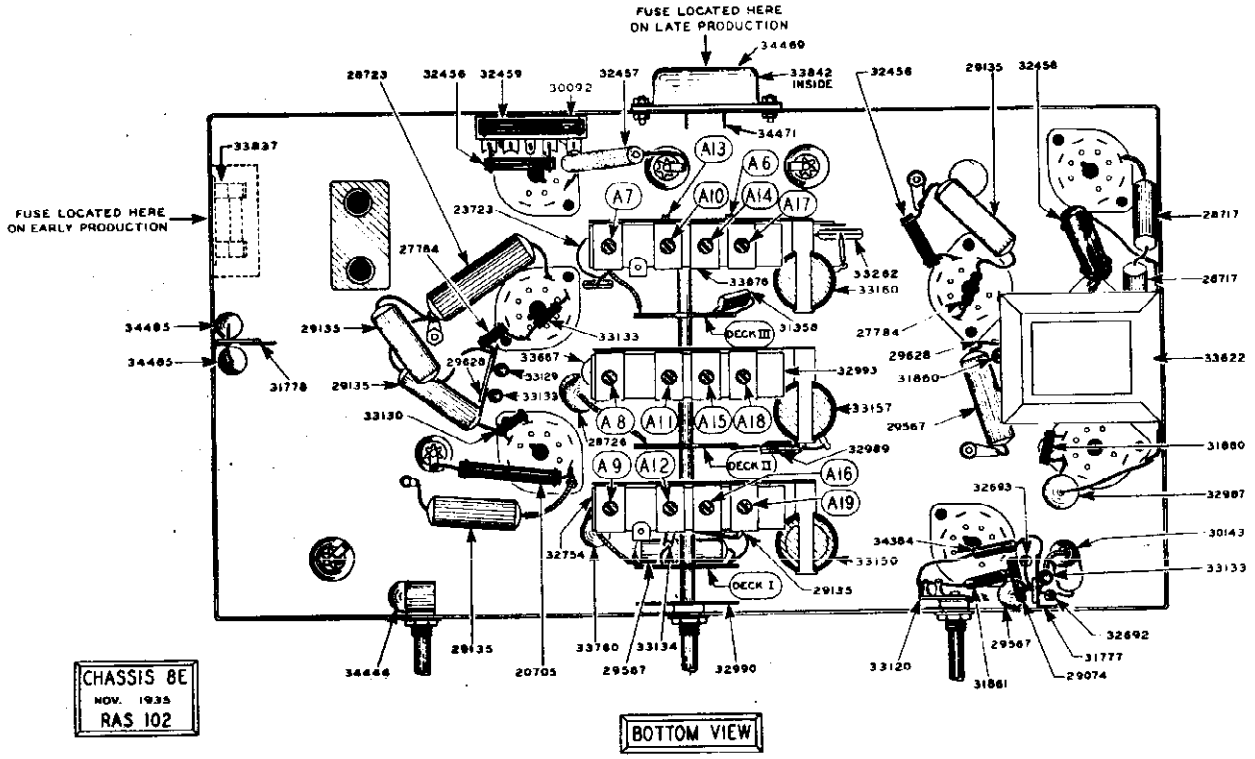

©John F. Rider, Publisher

GENERAL HOUSEHOLD UTILITIES-CO.

MODEL 871
Chassis 8E
Alignment
Parts List

SERVICE DATA

CONTINUITY AND VOLTAGE

Continuity and voltage readings should be taken from the underside of the chassis. The values given on the schematic diagram are average and allow the service man to make a quick check of the chassis constants. The socket layouts given on the schematic diagrams show each socket from the underside.

THE RANGE SWITCH

The Range Switch is a simple three deck multiple pole, positive acting switch, used to connect the various coils into their proper circuits and is designed in such a way that the coils being used are isolated from coils of the two succeeding bands of a lower frequency. In the case of the detector circuit both the higher and lower frequency bands, above and below the circuit selected, are shorted out. This switching arrangement not only selects the proper coils for each band, but grounds the unused sections, allowing the receiver to work at maximum sensitivity and selectivity on all four ranges.

The Range Switch and Coil Assembly is shown schematically in figure [3] and it will be noted that deck I (Antenna) is the one toward the front of the chassis, deck II (Detector) in the center position and deck III (Oscillator) toward the rear of the chassis. The diagram shows the exact position of the coil and switch lugs and little difficulty should be experienced in making any necessary repairs or inspection.

CIRCUIT ALIGNMENT PROCEDURE

Do not attempt to align the 8-E Chassis without proper equipment. Alignment condensers are shown in the accompanying illustration, and are numbered in order of procedure — I.F. Condensers on top and side of the I.F. Transformers.

1. EQUIPMENT:

(A) Test Oscillator.

A modulated Oscillator capable of producing signals at the I.F., Broadcast, Short-Wave, and weather Band frequencies is necessary for alignment of the 8-E Chassis.

(B) Insulated Screw Driver — (all bakelite or fibre) about 6" long.

(C) Output Meter.

This may be any of the standard Output Meters, but should be sufficiently sensitive to provide a good deflection at low signal strength.

(D) Coupling Means.

Coupling Condensers of 200 mmf., .25 mfd., and a 400 Ohm resistor should be used when coupling oscillator to receiver during alignment as specified in the procedure.

(E) The receiver should be aligned in a location free from local interference (interference caused by motors — flashers — automobile ignition, etc.) as high frequency disturbances will cause difficulties when the short wave section is being adjusted. (A screen room it to be recommended.)

2. DIAL SETTING:

Turn knob until condensers are fully meshed. The dial pointer (Hour hand) should be on the horizontal line of the dial, pointing to 9 and 3 o'clock.

The minute hand should be at 12 o'clock or in a vertical position.

3. I.F. ALIGNMENT:

(A) Connect signal lead of test oscillator to grid of 6A8 (1st detector tube) through .25 mfd. condenser. Connect the ground lead to the chassis.

(B) Before any adjustment of circuit constants is attempted, allow the chassis to "heat up" to normal operating temperature. This heating period should take from 20 to 30 minutes and is necessary to allow all coils and condensers to reach their normal temperatures so that when alignment is completed, there will be no inductance or capacity changes due to thermal expansion or contraction.

It is good to remember this heating condition when logging station — that is, do not attempt to log or tune in a station previously logged on a "cold" chassis, as the station being tuned in would "drift" and the calibration on the previously logged station would be incorrect.

(C) Set Dial pointer to 1400 K.C. and range switch on "Green" (No. 2) position.

(D) Place test Oscillator in operation at 455 K.C. Turn receiver volume control and tone control to maximum.

(E) Attenuate test Oscillator output to lowest value, consistent with obtaining a readable indication on output meter.

(F) Adjust the five I.F. Trimmers, A1, A2, A3, A4, A5, located on the I.F. Transformers on top of chassis Fig. (1), until maximum output is obtained. During alignment, maintain as low a value of signal as will allow obtaining of accurate adjustment.

4. 175 K.C. ALIGNMENT:

(A) Connect signal lead of test oscillator through 200 mmf. Condenser to Antenna binding post on Chassis.

(B) Connect the test oscillator ground lead to the ground post of chassis.

(C) Place test oscillator in operation at 175 K.C.

(D) Tune in signal to maximum (this point does not have to be exactly at 175 K.C. dial setting) range switch on "Red" (No. 1) position.

(E) Adjust the 175 K.C. Padding Condenser (A6) Fig. 2 (which is on rear of Chassis) in direction of signal increase. At the same time rock the tuning condenser back and forth through resonance while adjusting padding condenser, until maximum output is obtained.

5. 350 K.C. ALIGNMENT:

(A) Place test oscillator in operation at 350 K.C.

(B) Turn dial pointer to 350 K.C.

(C) Turn range switch to "Red" (No. 1) position.

(D) Adjust "weather Band" oscillator trimmer (A7) Fig. 2, to maximum output.

(E) Adjust Detector Trimmer (A8) Fig. 2, to maximum output.

(F) Adjust Antenna Trimmer (A9) Fig. 2, to maximum output.

6. RECHECK 175 K.C. PADDER CONDENSER — See 4 — above.

7. 1400 K.C. ALIGNMENT:

(A) Place test oscillator in operation at 1400 K.C.

(B) Turn dial pointer to 1400 K.C.

(C) Turn range switch to range "Green" (No. 2) position.

(D) Adjust broadcast oscillator trimmer (A10) Fig. 2, to maximum output.

(E) Adjust 1st Det. Trimmer (A11) Fig. 2, to maximum output.

(F) Adjust Antenna Trimmer (A12) Fig. 2, to maximum output.

8. 600 K.C. ALIGNMENT:

(A) Place test Oscillator in operation at 600 K.C.

(B) Tune in signal to maximum (this point does not have to be exactly at 600 K.C. dial setting.)

(C) Adjust the 600 K.C. Padding Condenser (A13), Fig. 2, which is on rear of Chassis, in direction of signal increases. At same time rock the tuning condenser back and forth through resonance while adjusting padding condenser until maximum output is obtained.

9. RECHECK 1400 K.C. ALIGNMENT: See 7 above.

10. 5000 K.C. ALIGNMENT:

(A) Set range switch to "Orange" (No. 3) position.

(B) Place test Oscillators in operation at 5000 K.C.

(C) Turn dial pointer to 5000 K.C.

(D) Adjust Set Oscillator Trimmer (A14), Fig. 2, to maximum output.

(E) Adjust Detector Trimmer (A15) Fig. 2, to maximum output.

(F) Adjust Antenna Trimmer (A16), Fig. 2, to maximum output.

11. 18 M. C. ALIGNMENT:

(A) Connect signal lead of test oscillator through 400 Ohm resistor to Antenna binding post of Chassis.

(B) Connect the ground lead to ground terminal of Chassis.

(C) Set Range Switch to "Amber" (No. 4) position and turn dial pointer to 18 M.C.

(D) Place Test Oscillator in operation at 18 M.C.

(E) Adjust set oscillator Trimmer (A17) Fig. 2, to maximum output.

(F) Adjust Detector Trimmer (A18) Fig. 2, to maximum output.

(G) Adjust Antenna Trimmer (A19) Fig. 2, to maximum output.

(H) On the 18 M.C. Oscillator Alignment it will be noted that there are two settings at which the signal will be received. Use the lower of the images for alignment point, that is, the setting giving most capacity or the point at which the trimmer is farthest in.

SPEAKER PARTS

TYPE 10A10

Part No.	Description	No. Used	Price
20010	Speaker Pot & Pole Piece	1	1.15
20061	Speaker Clamp	1	.10
27240	Speaker Gasket	1	.10
32604	10A10 Speaker Complete	1	11.50
33010	Field Coil	1	3.80
33103	Output Trans.	1	2.25
33202	Terminal Strip Assem.	1	.20
33203	Terminal Strip Cover	1	.10
33204	Terminal Strip Cover Insul.	1	.05
33731	Transformer Bracket	1	.10
34403	Cone & V. C. Assem.	1	1.60
33464	Basket & Front Plate Assem.	1	2.85

PARTS AND PRICE LIST

Model 871 Chassis 8E

PART NUMBERS ARE GIVEN ON THE ILLUSTRATIONS AND THE NUMBERS ARE BROUGHT DOWN IN NUMERICAL ORDER FOR CONVENIENCE

Part No.	Description	No. Used	Price
20705	25 M Ohm 1 Watt Resistor	1	$ .20
20861	Line Cord and Plug	1	.40
23883	50 M Ohm ½ Watt Resistor	2	.15
27784	400 Ohm ½ Watt Resistor	2	.15
27831	Pilot Light Socket Assem.	3	.10
28045	Pilot Lamp 6.8 Volt	4	.15
28638	Pointer Screw	1	.02
28717	.002 Mfd. 700 V. Tubular Condenser	2	.25
28723	.05 Mfd. 400 V. Tubular Condenser	2	.25
28726	.10 Mfd. 400 V. Tubular Condenser	1	.30
29065	Electrolytic Condenser Clamp	3	.05
29074	100 - 250 Mmf. Condenser (Mica)	1	.30
29135	.10 Mfd. 200 V. Tubular Condenser	5	.25
29209	Speaker Cable Clamp	1	.02
29522	11/32 Ball (Drive Mechanism)	4	.02
29851	Antenna Binding Post Assem.	1	.10
29567	.02 Mfd. 400 V. Tubular Condenser	3	.25
29628	Vertical Terminal Assem. (4 Lugs)	2	.10
30092	Terminal Strip (4 Lugs)	1	.06
30143	.05 Mfd. 200 V. Tubular Condenser	1	.25
30182	2nd I.F. Shield	1	.25
31116	Resistor 1 Ohm (Ohmite)	1	.20
31358	90 Mmf. Condenser (Mica)	1	.20
31637	Condenser Mounting Stud	2	.02
31714	Spring (gear tension)	2	.05
31739	Rubber Mtg. Washer Ver. Cond.	6	.02
31777	Terminal Strip (8 Lugs)	1	.10
31778	Junction Terminal Board (4 Lugs)	1	.10
31860	2 M Ohm ¼ Watt Resistor	2	.15
31861	500 Mmf. Condenser (Mica)	1	.20
32099	20 M Ohm ½ Watt Resistor	1	.15
32456	50 M Ohm ½ Watt Resistor	2	.15
32457	490 Ohm 6 Watt Resistor	1	.35
32458	220 Ohm 2 Watt Resistor	1	.30
32469	2800 Ohm 1 Watt Resistor	1	.20
32662	Knob (Range Switch)	1	.30
32692	Resistor 200 M Ohms 1/3 Watt Insul.	1	.15
32693	1 Megohm 1/3 Watt Resistor	1	.15
32764	4-Gang Trimmer Assem. (Antenna)	1	.50
32958	Mounting Foot Assem. (Rubber)	4	.25
33031	Power Transformer 115 V—25-50 Cycle (8EX)	1	9.00
33032	Power Transformer 110 V 135-220-250V—50-60 Cycle (8EZ)	1	9.00
33042	1st I.F. Coil & Shield Assem.	1	3.50
33046	2nd I.F. Coil & Shield Assem.	1	2.00
33052	1st I.F. Shield	1	.30
33054	Grid Cap	3	.01
33070	Knob Vol. Control & Station Selec.	2	.20
33071	Knob Tone Control & On-Off Switch	2	.20
33072	Cabinet Escutcheon	1	.20
33073	Escutcheon Retaining Spring	1	.20
33074	Dial Window	1	.20
33075	Window Retaining Ring	1	.10
33076	Window Gasket	1	.10
33109	Coil Shield (W. B.)	2	.30
33119	Volume Control	1	.90
33120	Tone Control Switch	1	.50
33129	300 Ohm ½ Watt Resistor	1	.15
33130	600 Ohm ½ Watt Resistor	1	.15
33133	50 M Ohm ¼ Watt Resistor	3	.15
33134	100 M Ohm 1/3 Watt Resistor	1	.15
33150	Antenna Coil	1	3.60
33157	Detector Coil	1	2.75
33160	Oscillator Coil Assem.	1	1.75
33163	Weather Band Padder Condenser	1	.35
33179	Amber Band Indicator	1	.10
33180	Orange Band Indicator	1	.10
33181	Red Band Indicator	1	.10
33182	Green Band Indicator	1	.10
33262	1065 Mmf. Condenser (Mica)	1	.30
33303	5 Prong Socket	1	.15
33306	6 Prong Socket	7	.15
33371	10 Mfd. 250 V Wet Electrolytic Cond.	1	.85
33419	Pilot Light Socket Assem.	1	.15
33467	Decalcomania (Gold Dot)	2	.10
33469	18 Mfd. 300 V Wet Electrolytic Cond.	1	.90
33598	12 Mfd. 450 V Wet Electrolytic Cond.	1	1.10
33622	Audio Input Transformer	1	2.75
33626	Baffle (Resonator)	1	2.50
33646	Electrolytic Clamp	1	.05
33879	Cone (Shutter)	1	.05
33880	Range Switch and Coil Cover Assem.	1	.75
33903	Detector Coil & Shield Assem.	1	1.35
33904	Oscillator Coil & Shield Assem.	1	1.25
33915	Variable Condenser	1	3.70
33917	Condenser Mtg. Foot (Rear)	1	.05
33918	Reflector Bracket Support	1	.10
33919	Drive Drum, Hub & Gear Assem.	1	.75
33924	Sleeve & Gear Assem.	1	.50
33927	Drive Shaft	1	.40
33928	Clutch Pin	1	.05
33930	Drive Mtg. Frame	1	.05
33931	½ Ball (Drive Mechanism)	15	.01
33933	Toggle Arm (Drive)	1	.05
33934	Toggle Spring	2	.05
33935	Drive String	1	.10
33936	Reflector Bracket	1	.05
33937	Pinion Gear & Adjusting Plate Assem.	1	.70
33940	Pointer Pinion	1	.20
33950	Reflector Mask	1	.25
33952	Dial Frame Welded Assem.	1	.30
33957	Shutter Spring	2	.02
33959	Glass Check Dial	1	1.40
33963	Dial Chart	1	.60
33966	Shutter	1	.10
33968	Shutter Tension Spring	1	.05
33969	Spring Connecting Link	1	.01
33970	Spacer (Dial Mtg.)	2	.03
33972	Minute Hand Pointer	1	.10
33978	Drive Spring	1	.10
33982	Hour Pointer	1	.10
33986	Light Shield	1	.10
33987	Dry Electrolytic Cond. 12 Mfd. 25 V.	1	.75
33988	Broadcast Padder Condenser	1	.35
33989	10 Mmf. Condenser (Mica)	1	.20
33990	Range Switch	1	4.25
33993	4-Gang Trimmer Assem. (Detector)	1	.50
33028	Power Transformer— 115 V—50-60 Cycle	1	7.50
33669	Light Shield Cover	1	.10
33660	Dial Assembly (Riveted)	1	2.15
33666	.03 Mfd. 200 Volt Tub. Condenser	1	.25
33667	.025 Mfd. 400 Volt Tub. Condenser	1	.25
33760	.006 Mfd. 700 Volt Tub. Condenser	1	.25
33837	Fuse Clip Assem. (Early Production)	1	.10
33842	Fuse (2 Amp)	1	.10
33852	10 Mfd. 475 Wet Electrolytic Cond.	1	.95
33878	4 Gang Trimmer Assem. (Osc.)	1	.50
34384	1500 Mmf. Condenser (Mica)	1	.20
34388	Speaker Cable Assem.	1	.20
34401	Drive Mechanism	1	1.00
34444	Line Switch	1	.45
34469	Fuse Cover	1	.10
34470	Fuse Cover Liner	1	.05
34471	Fuse Clip (Late Production)	1	.10
34485	.02 Mfd. 400 V Moulded Paper Condenser	2	.25
61207	1" x 8-32 H. H. M. Screw (Chassis Mtg.)	4	.01
63838	Felt Washers for Control Knob	5	.02
63863	Flat Washer (Chassis Mtg.)	4	.01
63928	Black Felt Washer (Drive)	1	.02
66337	Eyelet for Dial Assembly	1	.02

Prices subject to change without notice.

©John F. Rider, Publisher

MODEL 921
Chassis 90
Schematic, Parts
Alignment

GENERAL HOUSEHOLD UTILITIES CO.

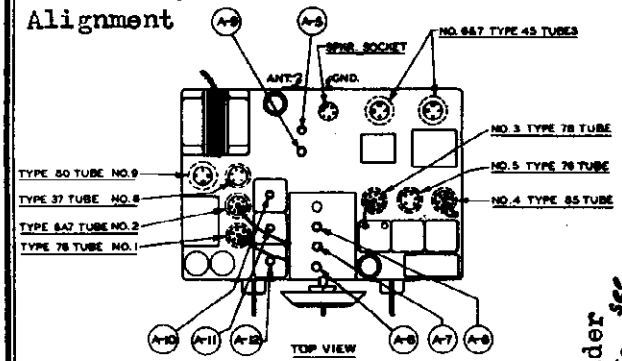

Rec'er. Dial to	Rec'ier. Wave Switch to	Padder No. See Note
1400	Broadcast	A1, A2, A3, A4
1400	Broadcast	A5, A6, A7, A8
600	Broadcast	A9
12 Mc.	Shortwave	A10, A11, A12

*Use .25-mf dummy antenna.
#Use 400-Ω dummy antenna.
NOTE—Adjust in order given

Connect Sig. Generator to	Sig. Gen. Freq.	Rec'er. Dial to
6A7 Grid*	262 Kc.	1400
Ant. post	1400 Kc.	1400
"	600 Kc.	600
" **	12 Mc.	12 Mc.

I.F. 262 K.C.

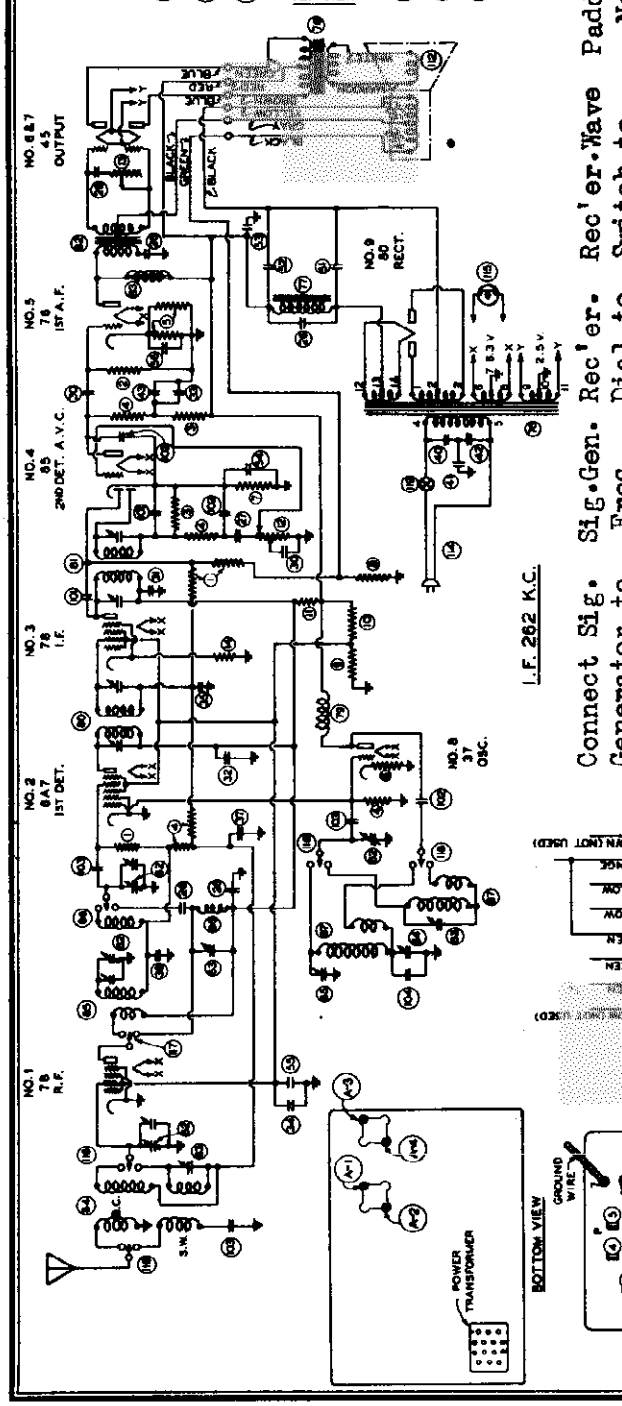

POWER TRANSFORMER CONNECTIONS

RESISTORS

ITEM	PART NO.	DESCRIPTION	NO. REQ'D	PRICE
1	28889	500 M. Ohms	1	.20
2	27998	750 M. Ohms	1	.20
3	28870	1.0 M. Ohms	1	.20
4	27443	1.5 M. Ohms	1	.20
5	30166	2.0 M. Ohms	1	.20
6	27996	2.25 M. Ohms	1	.20
7	27441	3 M. Ohms	Combination	1	.50
8	27442	5 M. Ohms			
9	27440	7.5 M. Ohms	Combination	1	.65
10	27439	10 M. Ohms			
11	28902	1.1 M. Ohm Resistor		1	.90
12	27997	Volume Control		1	1.15
13	28318	Tone Control		1	.75
14	27998	1 M. Ohms		1	.80
				.40

PAPER CONDENSERS

ITEM	PART NO.	DESCRIPTION	NO. REQ'D	PRICE
51	28726	.01 MFD. 400 V.	2	.15
52	29453	.02 MFD. 400 V.	1	.25
53	28867	.05 MFD. 400 V.	1	.25
54	28877	.025 MFD. 700 V.	1	.25
55	28870	.0045 MFD. 700 V.	2	.10
56		.01 MFD. 400 V.	1	
		.02 MFD. 400 V.		
		.05 MFD. 400 V.	1	2.00
		.1 MFD. 400 V.		
		.2 MFD. 400 V.	1	
		.1 MFD. 600 V.		
		.01 MFD. 600 V.	1	.60
		.02 MFD. 600 V.		
		.05 MFD. 600 V.	1	.80
		.1 MFD. 600 V.		
		.01 MFD. 600 V.		
	28725	.05 MFD. 400 V.	1	

ELECTROLYTIC CONDENSERS

ITEM	PART NO.	DESCRIPTION	NO. REQ'D	PRICE
61	27710	8 MFD. 475 V.	1	1.15
62	27711	8 MFD. 475 V.	1	.25
63	29562	8 MFD. 350 V.	1	.25
64	27670	8 MFD. 25 V.	1	.25
65		8 MFD. 475 V.	1	1.20
66	28789	4 MFD. 25 V.	1	.60
67				
68				
69				
70				
71				
72				
73				
74				
75				
76				

TRANSFORMERS & CHOKES

ITEM	PART NO.	DESCRIPTION	NO. REQ'D	PRICE
76	27767	Power Transformer	1	10.50
77	28855	Filter Choke	1	2.65
78	29559	R.F. Choke	1	.60
79	31606	1st I.F. Transformer	1	3.50
80	31607	2nd I.F. Transformer	1	3.50
81	31608	Input Transformer	1	4.00
82	28052	Audio Choke	1	1.75
83	28053	Ant. Coil	1	.275
84	31594	Det. Coil	1	1.75
85	31592	Osc. Coil	1	1.75
86	31596	Bf. Selector	1	1.50
87	31598	Osc. Coil	1	2.00

ADJUSTABLE CONDENSERS

ITEM	PART NO.	DESCRIPTION	NO. REQ'D	PRICE
62	31605	Variable Cond.	1	1.50
63	30131	5 M. Trimmer	3	.85
64	27548	Osc. Trimmer (600)	1	.60
65	27549	Osc. Trimmer (1400)	1	.60
66	27548	Osc. Trimmer (1400)	1	.60
	31606	Mer. Cond. Center Assem.	1	.275

MICA CONDENSERS

ITEM	PART NO.	DESCRIPTION	NO. REQ'D	PRICE
101	28851	100 Mmf.	2	.15
102	28849	250 Mmf.	3	.20
103	29048	50 Mmf.	3	.20
104	28074	250 Mmf. & 100 Mmf.	1	.90

SPEAKER PARTS.

ITEM	PART NO.	DESCRIPTION	NO. REQ'D	PRICE
111	31611	Output Trans. Assem.	1	1.60
112	31612	Output Trans. Assem.	1	1.60
113	31613	Output Trans. Assem.	1	1.60
114	31614	Field Coil Assem.	1	3.50
115	27116	Transformer Bracket	1	.20
116				
117				
118				
119				
120				
121				
122				
123				
124				
125				
126				
127				
128				
129				
130				
131				
132				
133				
134				
135				
136				
137				
138				
139				
140				
141				
142				
143				
144				
145				
146				
147				
148				
149				
150				

MISCELLANEOUS

ITEM	PART NO.	DESCRIPTION	NO. REQ'D	PRICE
151	31619	6-Prong Socket	1	.15
152	31620	5-Prong Socket	1	.10
153	31621	4-Prong Socket	1	.10
154	28835	Tube Shield Base	2	.15
155	28836	7-Prong Socket	1	.15
156	27689	6-Prong Socket (Sub)	1	.15
157	28313	Ant. Binding Post Assem.	1	.10
158	27554	Vert. Tumunel Assem.	1	.06
159	28838	Electro. Resi. Shield	1	.02
160	28839	Bracket Term.	1	.02
161	31705	Electrolytic Input	1	.05
162	31590	Triple Cord Con	1	.75
163	27560	Drive Shaft	1	.05
164	27617	Drive Pulley Assembly	1	.60
165	27556	Drive Dyn. Spring	1	.06
166	27707	String & Pulley Assem.	1	.10
167	27709	Dial Pointer & Brkt.	1	.14
168	21313	Term. Assem.	1	.15
169	31589	" " Dec. B	1	1.50
170	31588	" " Dec. A	1	
171	28865	Line Cord	1	.15
172	28005	6.3V Pilot Light	1	
173	28004	Line Switch on Vol. Cont.	1	.15
174	27554	Vert. Term. Assem.	1	.05
175	27558	Shield & Socket Assem.	1	.20
176	27703	" "	1	.20
177	28878	Thumb Screw	1	.05
178	31611	Dial Cord Assem.	1	
179	28941	Dial Cord	4	.05

Note:—
Prices subject to change without notice.
Complete speakers may not be returned for credit.

27442	Pilot Marker	R.D.O.	3	.01
27443	Pilot Knob		2	.15
27687	Set Screw Knob		2	.20

Grunow Radio
CHASSIS TYPE 9-C
RECEIVER MODEL 921 SPEAKER 10DC-4

GENERAL HOUSEHOLD UTILITIES CO.
RADIO SERVICE DEPARTMENT.
RA546 CHICAGO, U.S.A.

©John F. Rider, Publisher

GENERAL HOUSEHOLD UTILITIES CO.

MODEL 1171
Chassis 11C
Schematic
Voltage

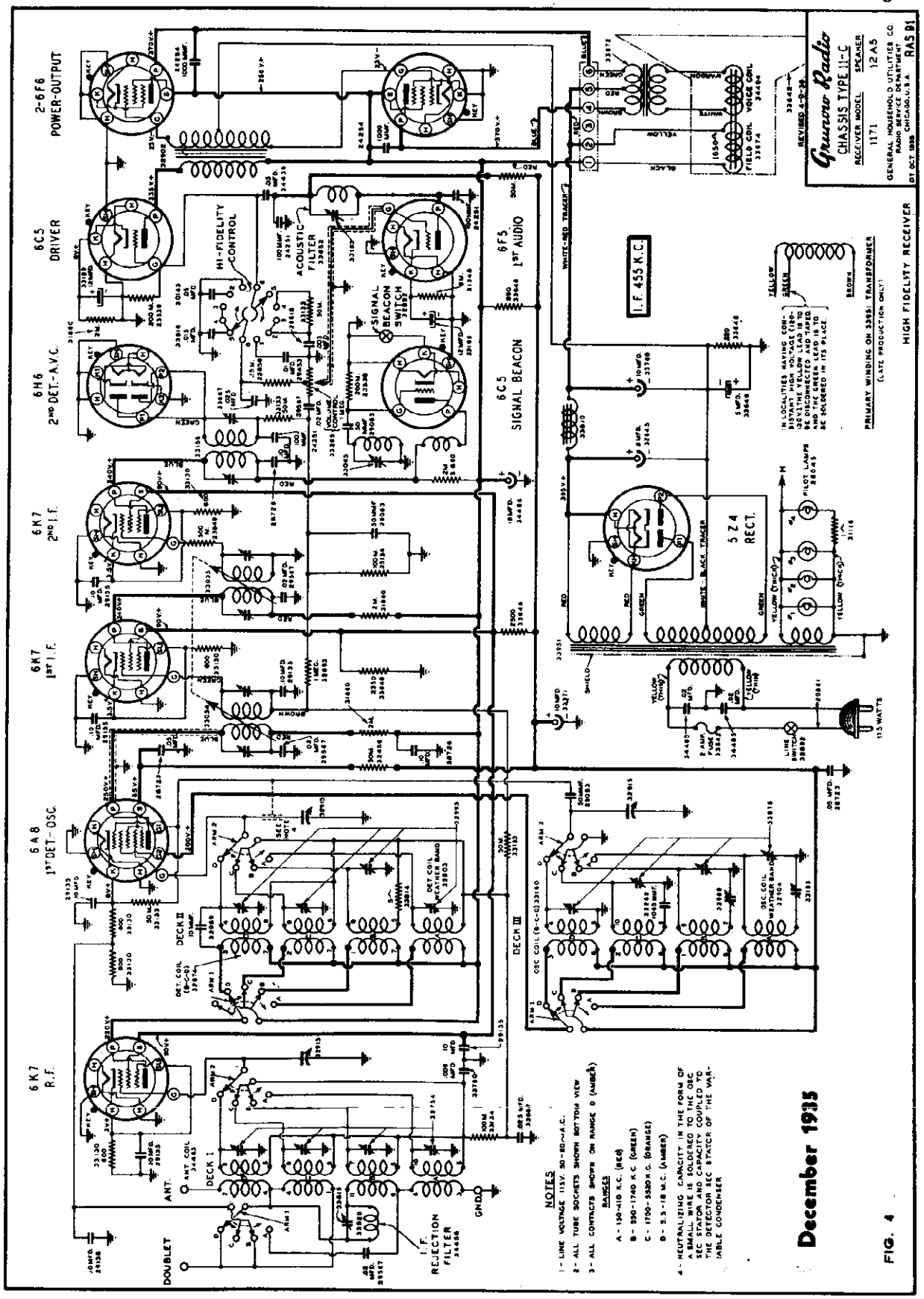

FIG. 4

MODEL 1171
Chassis 11C
Socket, Trimmers
Chassis, Switch &
Coil Assembly

GENERAL HOUSEHOLD UTILITIES CO.

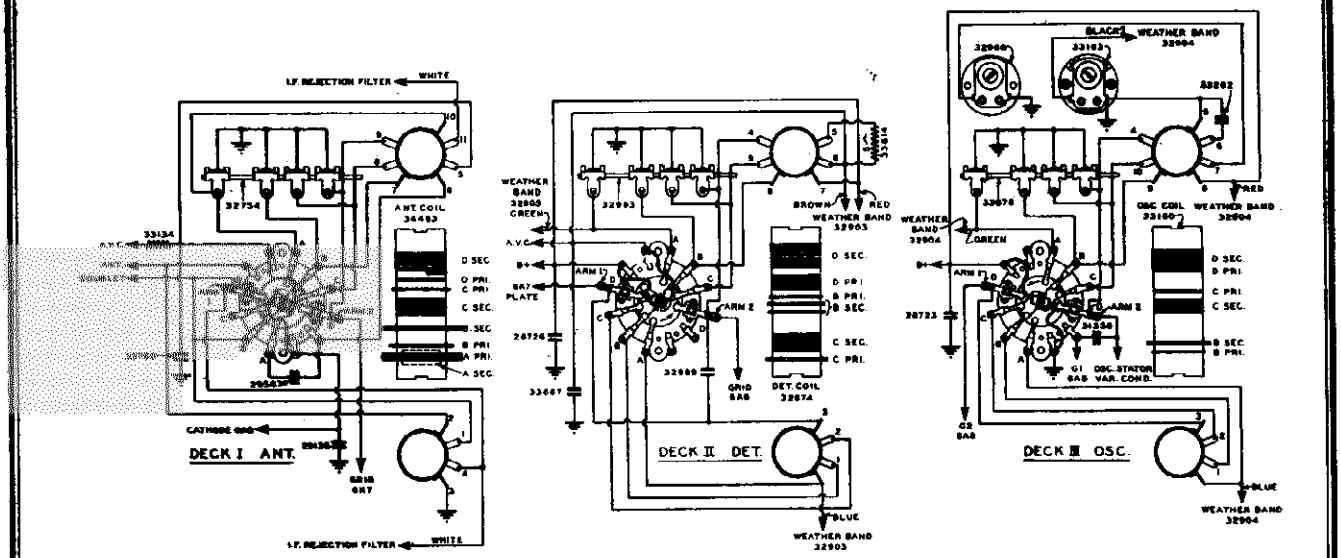

SCHEMATIC DIAGRAM RANGE SWITCH & COIL ASSEMBLY
11C & 12A

FIG. 3

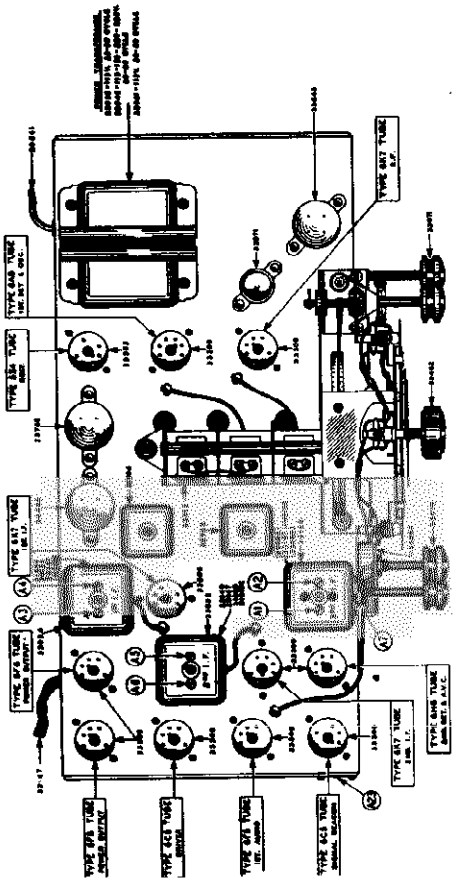

TOP VIEW
FIG. 5

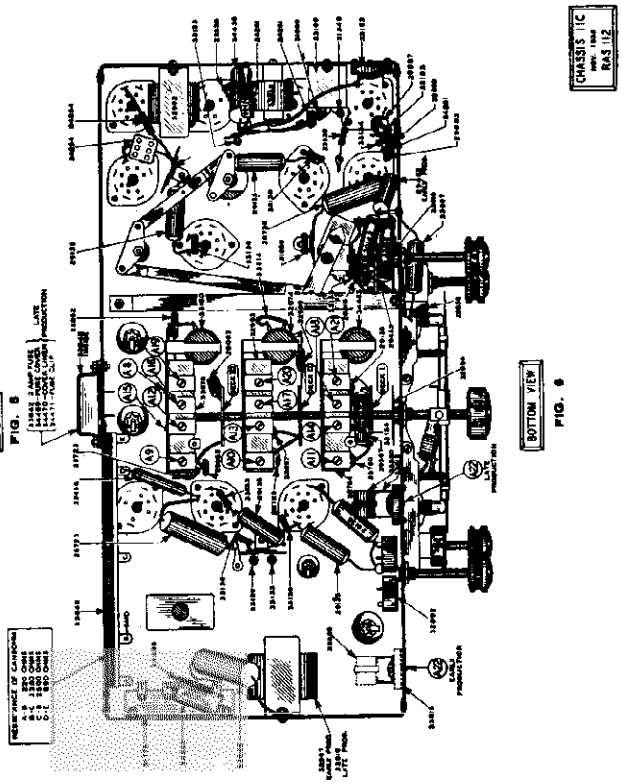

BOTTOM VIEW
FIG. 6

©John F. Rider, Publisher

Mechanical Alignment
Parts Details

GENERAL HOUSEHOLD UTILITIES CO.

MODEL 117
Chassis 11C

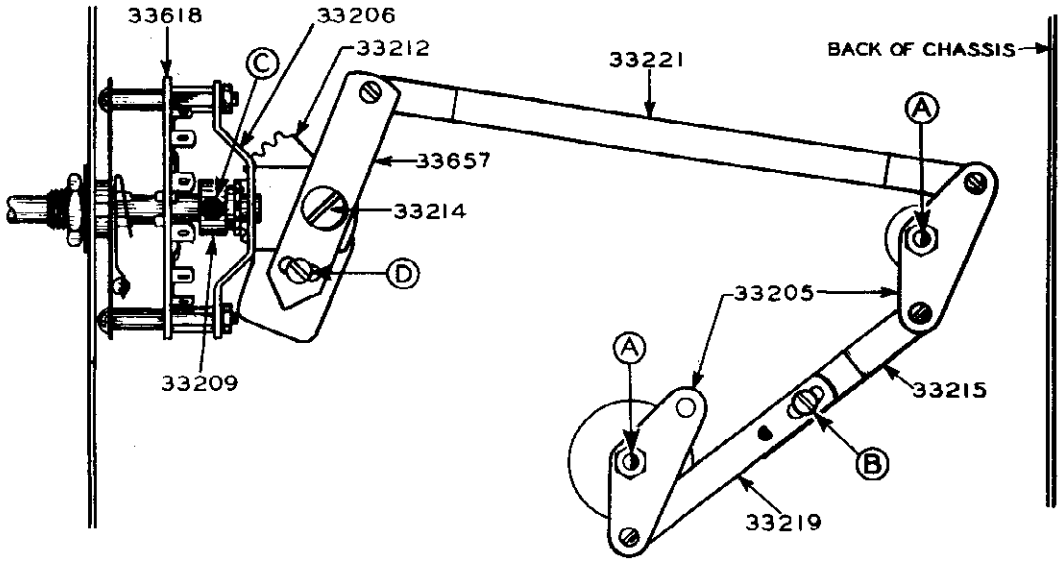

DIRECTIONS FOR MECHANICAL ALIGNMENT OF I.F. TRANSFORMERS

FLATS (A) ON THE VERTICAL SHAFTS SHOULD BE MADE PARALLEL WITH EACH OTHER BY ADJUSTING CONNECTING ARM AT (B). TURN THE HIGH-FIDELITY SWITCH CLOCK-WISE AS FAR AS IT WILL GO, (NO. 6 POSITION). IF THE SWITCH DOES NOT TURN TO NO. 6 POSITION, LOOSEN SET SCREW (C) AND TURN SWITCH WITH GEAR LOOSE. WITH SWITCH IN THIS POSITION, MOVE THE LEVER ARMS SO THAT THE FLATS (A) ARE PARALLEL TO THE BACK OF THE CHASSIS BY ADJUSTING LEVER AT (D). TIGHTEN ALL SCREWS AND BE SURE THE SWITCH COVERS ALL SIX POSITIONS EASILY WITHOUT BINDING. NOW PROCEED WITH ELECTRICAL ALIGNMENT.

DT

FIG. 2

RAS118

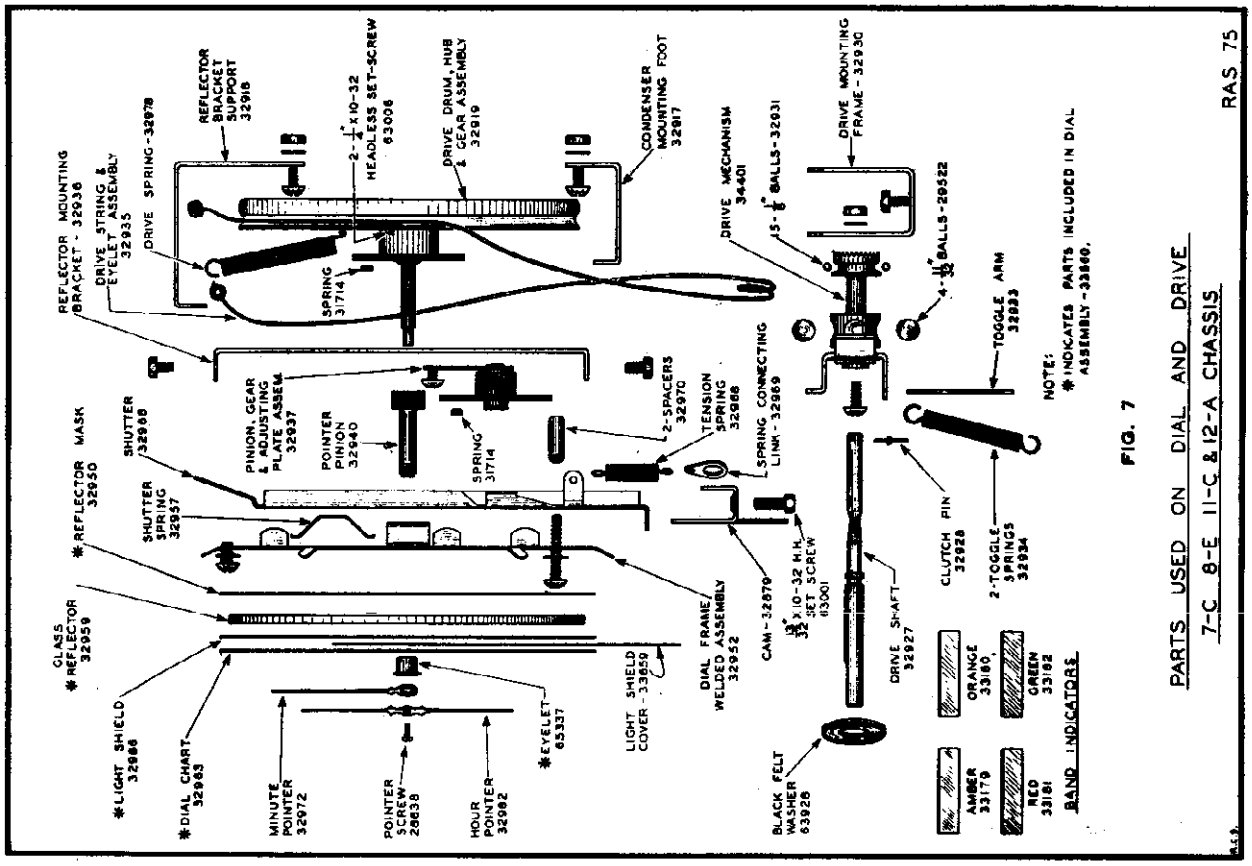

FIG. 7

PARTS USED ON DIAL AND DRIVE
7-C, 8-E, 11-C & 12-A CHASSIS

RAS 75

CIRCUIT ALIGNMENT PROCEDURE

Do not attempt to align the 11C Chassis without the proper equipment. Alignment condensers are shown in the accompanying illustrations and are numbered in order of procedure—I.F. Condensers on top of the I.F. Transformers.

1. EQUIPMENT:

(A) Test Oscillator.

A modulated Oscillator capable of producing signals at the I.F. Broadcast, Short-Wave, and Weather Band frequencies is necessary for alignment of the 11C Chassis.

(B) Insulated Screw Drivers—(all bakelite or fibre) about 6" long.

(C) Output Meter.

This may be any of the standard Output Meters, but should be sufficiently sensitive to provide a good deflection at low signal strength.

(D) Coupling Means.

Coupling Condensers of 200 mmf., .25 mfd., and a 400 Ohm resistor should be used when coupling oscillator to receiver during alignment as specified in the procedure.

(E) The Receiver should be aligned in a location free from local interference (interference caused by motors—doctors—automobile ignitions, etc.) as high frequency disturbances will cause difficulties when the short wave section is being adjusted. (A screen room is to be recommended.)

2. DIAL SETTING:

Turn dial knob until condensers are fully meshed. The dial pointer (Hour Hand) should be on the horizontal line of the dial, pointing to 9 and 3 o'clock. The minute hand should be at 12 o'clock or in a vertical position.

3. I.F. ALIGNMENT:

EXPLANATION

The GRUNOW High-Fidelity system is incorporated in the Chassis and the following procedure must be strictly adhered to:

The I.F. circuit of this chassis is known as an "expanded I.F. system." In order to reproduce practically all of a "High-Fidelity nature" it is not only necessary to build an audio system capable of reproducing all the notes of the audio-spectrum at a mean output level, but it is also necessary to build a radio-frequency system that will pass signals without cutting off the side-bands. In other words, the selectivity of the receiver must be broad enough to pass all high-fidelity signals when desired—and be so designed that the selectivity may be increased at will, so that nearby powerful transmitting stations will not interfere with other local or distant stations. This variable selectivity is accomplished by changing the mutual inductance in two of the I.F. Transformers—the coupling being changed by means of a control knob on the front of the receiver, which also acts as a tone control.

This control varies the transformer coupling, giving maximum selectivity in position No. 1, and broadest selectivity and highest fidelity in position No. 6.

When aligning the I.F. transformers see that this control is in position (No. 1) of greatest selectivity.

Fig. No. 1 shows a graphical picture of the results obtained, first with the control on No. 1 position, or maximum selectivity, second, at No. 6 position, showing the selectivity of the receiver broadened to its greatest extent, permitting the higher frequency sidebands to be passed through the selective circuit with the result that tone quality is greatly improved.

It will be noted that both peaks (No. 4) are practically the same height, and that both slopes are symmetrical.

The third curve represents a condition wherein the I.F. transformers are NOT properly peaked, and it will be noted that one peak is proportionately too high and the other has been proportionately lost. This illustration is shown merely as an example of what to expect when the receiver is not properly aligned.

Before any adjustment of circuit constants is attempted, allow the Chassis to "heat up" to normal operating temperatures. This heating period should take from 20 to 30 minutes and is necessary to allow all coils and condensers to reach their normal temperatures so that when alignment is completed, there will be no inductance or capacity changes due to thermal expansion or contraction.

It is good to remember this heating condition when logging stations—that is, do not attempt to log or tune in a station previously logged on a "cold" chassis, as the station being tuned in would "drift" and the calibration on the previously logged station would be incorrect.

(A) Connect signal lead of test oscillator to grid of 6A8 (1st detector tube) through .25 mfd. condenser. Connect the ground lead to the chassis.

(B) Set dial pointer to 1400 K.C. and range switch on "Green" (No. 2) position.

(C) Place test Oscillator in operation at 456 K.C. Turn receiver volume control to maximum and HI-FIDELITY CONTROL to POSITION No. 1, which is the maximum selectivity position.

(D) Attenuate test Oscillator output to lowest value, consistent with obtaining a readable indication on output meter.

(E) Adjust six I.F. Trimmers, A1, A2, A3, A4, A5, A6, located on the I.F. Transformers on top of Chassis, Fig. (5) until maximum output is obtained. During adjustments, maintain as low a value of signal as will allow obtaining of accurate adjustment.

(F) Turn the on and off switch clockwise to the Signal Beacon position.

(G) Adjust Signal Beacon trimmer (A7) Fig. 5, which is located on side of I.F. transformer (near dial) to Zero beat with the 456 K.C. incoming signal.

4. 175 K.C. ALIGNMENT:

(A) Connect signal lead of test Oscillator through 200 mmf. Condenser to Antenna binding post on Chassis.

(B) Connect the test Oscillator ground lead to the ground post of Chassis.

(C) Place test Oscillator in operation at 175 K.C.

(D) PLACE HI-FIDELITY CONTROL IN POSITION NO. 2.

(E) Turn range switch to "Red" (No. 1) position.

(F) Tune in signal to maximum (this point does not have to be exactly at 175 K.C. dial setting.)

(G) Adjust the 175 K.C. Padding Condenser (A8) Fig. 6 (which is on rear of Chassis) in direction of signal increase. At same time rock the tuning condenser back and forth through resonance while adjusting padding condenser until maximum output is obtained.

5. 550 K.C. ALIGNMENT:

(A) Place test Oscillator in operation at 550 K.C.

(C) Turn dial pointer to 550 K.C.

(C) Turn range switch to "Red" (No. 1) position.

(D) Place Hi-Fidelity Control in position No. 2.

(E) Adjust "weather band" oscillator trimmer (A9), Fig. 5, to maximum output.

(F) Adjust Detector Trimmer (A10) Fig. 6 to maximum output.

(G) Adjust Antenna Trimmer (A11), Fig. 6 to maximum output.

6. RECHECK 175 K.C. PADDER CONDENSER—See 4—Above.

7. 1400 K.C. ALIGNMENT:

(A) Place test oscillator in operation at 1400 K.C.

(B) Turn dial pointer to 1400 K.C.

(C) Turn range-switch to range "Green" (No. 2) position.

(D) Hi-Fidelity Control remains in No. 2 position.

(E) Adjust broadcast oscillator trimmer (A12) Fig. 6 to maximum output.

(F) Adjust 1st Det. Trimmer (A13) Fig. 6 to maximum output.

(G) Adjust Antenna Trimmer (A14) Fig. 6 to maximum output.

8. 600 K.C. ALIGNMENT:

(A) Place test oscillator in operation at 600 K.C.

(B) Tune in signal to maximum (this point does not have to be exactly at 600 K.C. dial setting).

(C) Adjust the 600 K.C. Padding Condenser (A15), Fig. 6, which is on rear of Chassis, in direction of signal increase. At same time rock the tuning condenser back and forth through resonance while adjusting padding condenser until maximum output is obtained.

9. RECHECK 1400 K.C. ALIGNMENT—See 7—Above.

10. 5000 K.C. ALIGNMENT:

(A) Set Range Switch to "Orange" (No. 3) position.

(B) Place test Oscillator in operation at 5000 K.C.

(C) Turn Dial Pointer to 5000 K.C.

(D) Adjust Set Oscillator Trimmer (A16) Fig. 6 to maximum output.

(E) Adjust Detector Trimmer (A17) Fig. 6 to maximum output.

(F) Adjust Antenna Trimmer (A18) Fig. 6 to maximum output.

11. 18 M.C. ALIGNMENT:

(A) Connect signal lead of test oscillator through 400 Ohm Resistor to Antenna binding post of Chassis.

(B) Connect the ground lead to ground terminal of Chassis.

(C) Set Range Switch to "Amber" (No. 4) position and turn dial pointer to 18 M.C.

(D) Place test Oscillator in operation at 18 M.C.

(E) Adjust set oscillator Trimmer (A19) Fig. 6 to maximum output.

(F) Adjust Detector Trimmer (A20) Fig. 6 to maximum output.

(G) Adjust Antenna Trimmer (A21) Fig. 6 to maximum output.

(H) On the 18 M.C. Oscillator Alignment it will be noted that there are two settings at which the signal will be received. Use the lower of the images for alignment point, that is, the setting giving most capacity or the point at which the trimmer screw is farthest in.

12. ALIGNMENT OF "I.F. REJECTOR FILTER" CIRCUIT:

Due to interference caused by commercial code stations operating on wave lengths near the frequency at which the I.F. amplifiers of this receiver are aligned, an I.F. filter has been incorporated in the antenna circuit to act as a rejector system, thereby lessening the possibility of this form of interference entering the receiver.

The filter should be tuned to the same frequency as the I.F. Transformers, and this operation should be performed after the set has been completely aligned.

(A) Connect signal lead of test oscillator to antenna binding post through a 200 mmf. condenser.

(B) Connect ground lead to ground terminal of chassis.

(C) Set dial pointer to 1400 K.C. and range switch on Green (No. 2) position.

(D) Place test oscillator in operation at 456 K.C.—turn receiver volume control to maximum and Hi-Fidelity control to No. 2 position.

(E) Attenuate test oscillator output so that a fairly strong signal is applied, and tune filter condenser (A22) Fig. (6) so that the output meter indicates a minimum reading.

13. TUNING ACOUSTIC FILTER:

The I.F. system of a Hi-Fidelity receiver is expanded or broadened so that audio frequencies of the higher musical range will be passed through the selective circuits. It is desirous to pass audio frequencies only up to a value of 10,000 cycles, so that the extra musical range may be reproduced, at the same time frequencies above this value must be cut off—so that station noises and atmospheric disturbances are not admitted to the speaker system.

An acoustic filter is incorporated in this chassis, that may be tuned so that frequencies above 10,000 cycles are excluded. This filter is tuned as follows:

(A) After all other adjustments are completed, apply a 10,000 cycle note, produced by an audio oscillator or phonograph frequency record, connecting one of the signal leads to the grids of the 6F6 (1st A.F. tube) and the ground lead to the chassis.

(B) Set Hi-Fidelity control to maximum (No. 6) position.

(C) Attenuate audio signal so as to obtain a good reading on the output meter.

(D) Tune acoustic filter condenser (A23) Fig. (5) until a MINIMUM output is indicated on the output meter.

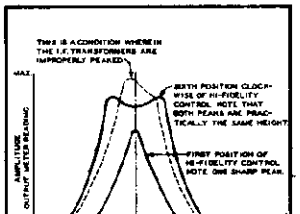

THE RANGE SWITCH

The Range Switch is a simple three deck multiple pole, positive acting switch, used to connect the various coils into their proper circuits, and is designed in such a way that the coils being used are isolated from coils of the two succeeding bands of a lower frequency. In the case of the detector circuit both the higher and lower frequency bands, above and below the circuit selected, are shorted out. This switching arrangement not only selects the proper coils for each band, but grounds the unused section, allowing the receiver to work at maximum sensitivity and selectivity on all four ranges.

The Range Switch and Coil Assembly is shown schematically in figure (3) and it will be noted that deck I (Antenna) is the one toward the front of the chassis, deck II (Detector) in the center position and deck III (Oscillator) toward the rear of the chassis. The diagram shows the exact position of the coil and switch legs, and little difficulty should be experienced in making any necessary repairs or inspection.

PARTS AND PRICE LIST

Model 1171 — Chassis 11C

PART NUMBERS ARE GIVEN ON THE ILLUSTRATIONS AND THE NUMBERS ARE BROUGHT DOWN IN NUMERICAL ORDER FOR CONVENIENCE

Part No.	Description	No. Used	Price
20041	Line Cord & Plug	1	.40
23006	Resistor 25M Ohm ½ Watt	1	.15
23526	Resistor 200M Ohm ½ Watt	2	.15
23609	Resistor 100M Ohm ½ Watt	1	.15
24251	Condenser 100 Mmf. Mica	3	.15
24284	Condenser 1000 Mmf. Mica	2	.20
26933	Spring Washer	1	.01
27422	Electrolytic Step Washer	2	.02
27931	Pilot Lamp Socket Assem.	3	.10
28045	Pilot Lamp (6.8 Volt)	4	.15
28438	Dial Pointer Screw	1	.02
29723	Condenser .05 Mfd. 400 Volt Tubular	2	.25
29726	Condenser .1 Mfd. 400 Volt Tubular	2	.30
29085	Electrolytic Condenser Clamp	3	.08
29083	Condenser—50 Mmf. Mica	3	.30
29136	Condenser .1 Mfd. 200 Volt Tubular	7	.25
29209	Fuse Cable Clamp	1	.02
29463	Condenser .01 Mfd. 400 Volt Tubular	2	.30
29522	Ball 11/32	4	.02
29651	Antenna & Double Binding Post Assem.	1	.15
29657	Condenser .02 Mfd. 400 Volt Tubular	4	.25
29818	Condenser .001 Mfd. 700 Volt Tubular	1	.25
30143	Condenser .05 Mfd. 200 Volt Tubular	1	.25
30197	Condenser 1500 Mmf. (Mica)	1	.25
30612	Spring Washer (Var. I.F.)	8	.01
31116	Resistor—1 Ohm (Ohmite)	1	.20
31368	Resistor 6M Ohm ½ Watt	1	.15
31424	Condenser Insulating Shield	2	.10
31716	Gear Tension Spring	2	.05
31762	Coil Shield (3rd I.F.)	1	.35
31777	Terminal Board (6 Leg)	1	.10
31778	Terminal Board (4 Leg)	1	.10
31866	Resistor 2M Ohm ½ Watt	4	.15
31886	Resistor 50M Ohm ½ Watt	1	.15
32162	Knob (Range Switch)	1	.30
32693	Resistor 1 Meg. 1/3 Watt (Insul.)	1	.15
32754	4 Gang Trimmer Assem. (Ant. Coil)	1	.80
32886	Mounting Post Assem. (Bakelite)	4	.25
32968	Electrolytic Condenser Strap	1	.08
32974	Detector Coil	1	2.00
32979	Cam (Slotted)	1	.05
32980	Range Switch Cover	1	.75
32992	Line & Signal Beacon Switch	1	1.20
32997	Filter Choke Assem. (Early Production—Use only with Power Trans. No. 33036)	1	2.60
32903	Input Audio Interformer	1	5.00
32983	Detector Coil & Shield Assem. (Weather Band)	1	1.35
32994	Oscillator Coil & Shield Assem. (Weather Band)	1	1.25
32918	Variable Condenser	1	3.70
32917	Condenser Mtg. Post (Rear)	1	.08
32918	Reflector Bracket Support	1	.10
32919	Drive Drum, Hub & Gear Assem.	1	.75
32921	Drive Shaft	1	.40
32928	Clutch Pin	1	.08
32929	Pulcrum Bracket	1	.15
32930	Drive Mtg. Frame	1	.85
32931	½" Ball	15	.05
32933	Toggle Arm (Drive)	1	.08
32934	Toggle Spring	2	.05
32935	Drive String & Eyelet Assem.	1	.10
32936	Rotator Bracket	1	.10
32937	Pinion, Gear & Adj. Plate Assem.	1	.70
32940	Pointer Pinion	1	.50
32980	Reflector Mask	1	.25
32982	Dial Frame Welded Assem.	1	.30
32987	Starter Spring	2	.02
32989	Glass Clock Dial	1	1.40
32943	Pyralin Dial	1	.40
32966	Shutter	1	.10
32968	Shutter Tension Spring	1	.05
32969	Spring Connecting Link	1	.02
32970	Dial Assem. Spacer	2	.01
32972	Minute Hand Pointer	1	.10
32978	Drive Spring	1	.10
32982	Hour Hand Pointer	1	.10
32986	Light Shield	1	.10
32988	Broadcast Padder Condenser	1	.35
32989	Condenser 18 Mmf. Mica	1	.20
32990	Range Switch	1	4.25
32993	4 Gang Trimmer Assem. (Det. Coil)	1	.80
33034	1st I.F. Variable Transf. & Shield	1	2.75
33035	2nd I.F. Variable Transf. & Shield	1	4.25
33036	Power Transf. 115 Volt 60-40 Cycle (Early Production. Use only with Filter Choke No. 32997)	1	8.85
33038	Power Transformer 118 V.—25-50 cycle (11CX)	1	11.80
33040	Power Transformer Universal 110-138-220-250 —50-60 cycle	1	11.80
33084	Grid Cap	6	.01
33066	Signal Beacon Padder Condenser	1	.40
33070	Knob Vol. Cont. & Station Selector	2	.20
33071	Knob Tone Cont. & Line Switch	2	.20
33072	Cabinet Escutcheon	1	.30
33073	Sweetheart Retaining Spring	1	.02
33074	Dial Window	1	.10
33075	Window Retaining Ring	1	.10
33076	Window Gasket	1	.10
33109	Coil Shield & Bracket Assem. (Weather Band)	1	.25
33130	Resistor 440 Ohm ½ Watt	1	.15
33133	Resistor 86M Ohm ½ Watt	1	.15
33134	Resistor 100M Ohm 1/3 Watt	1	.15
33167	Speaker Cable Assem.	1	1.40
33186	3rd I.F. Trans. & Signal Beacon Assembly	1	3.80
33160	Oscillator Coil	1	1.25
33160	Padder Condenser	1	.25
33169	Condenser 10 Mmf. (Var. I.F.)	1	1.00
33179	Bond Indicator—Amber	1	.10
33180	Bond Indicator—Orange	1	.10
33181	Bond Indicator—Red	1	.10
33182	Bond Indicator—Green	1	.10
33206	Dial Lens (Var. I.F.)	1	.25
33206	Band Strip Escutcheon (Var. I.F.)	1	.25
33209	Plate & Pilot Assem. (Var. I.F.)	1	.30
33212	Condenser 10 Mmf. (Var. I.F.)	1	1.00
33216	Shielded Screw (Var. I.F.)	1	.01
33215	Connecting Rod (Var. I.F.)	1	.25
33219	Connecting Rod (Var. I.F.)	1	.25
33221	Connecting Rod (Var. I.F.)	1	.25
33262	Condenser .005 Mmf. Mica	1	.25
33268	Volume Control	1	.75
33303	6 Prong Socket (6A8)	1	.15
33306	6 Prong Socket	1	.15
33368	Elec. Condenser Chassis Terminal	2	.02
33371	Condenser 2-25 Mfd. 450 Volt Wet Electrolytic	1	1.85
33419	Dial Light Socket Assem.	1	.15
33437	Coil Shield (Var. I.F.)	2	.25
33488	Colored Cap	1	.10
33618	Switch (Six Position)	1	.75
33636	Bottle (Varnish)	1	2.50
33645	Condenser 8 Mfd. 450 Volt Wet Electrolytic	1	1.90
33646	Condenser 8 Mfd. 50 Volt Dry Electrolytic	1	.45
33647	Resistance Unit Set	2	.10
33648	Condenser 2000 Mmf.	1	.40
33652	Acoustic Filter Choke	1	1.00
33657	Adjusting Lever (Var. I.F.)	1	.25
33659	Light Shield Cover	1	.10
33660	Light Shield (Inverted)	1	2.15
33667	Condenser .005 Mfd. 400 Volt Tubular	2	.25
33760	Condenser .005 Mfd. 700 Volt Tubular	1	.25
33798	Condenser 16 Mfd. 475 Volt Wet Electrolytic	1	1.75
33810	Filter Choke Assem. (Late Production—Use only with Power Trans. No. 33981)	1	2.60
33814	Resistor 8 Ohm 1/3 Watt (Fine)	1	.15
33815	I.F. Rejector Filter Condenser Only	1	.40
33816	Condenser .015 Mfd. 400 Volt Tubular	1	.25
33820	I.F. Rejector Filter Coil Only	1	.75
33834	Terminal Mtg. Strip (Single Leg)	1	.10
33837	Fuse Clip Assem. (Early Prod.)	1	.10
33843	Fuse (2 Amp.) (Yellow)	1	.25
33878	4 Gang Trimmer Cond. (Osc. Coil)	1	.80
33919	Resistor 1OM Ohm 2 Watts	1	.25
33981	Power Trans. (Late Production—Use only with Filter Choke No. 33810)	1	5.50
34401	Drive Mechanism	1	1.50
34436	.05 Mfd. 400 Volt Tubular Condenser	1	.30
34458	I.F. Rejector Filter Coil & Cond. Assem.	1	.80
34463	Ant. Coil Assem.	1	.75
34464	Condenser 10 Mfd. 275 Volt Wet Electrolytic	1	1.75
34469	Fuse Cover (Late Production)	1	.15
34470	Fuse Cover Liner (Late Prod.)	1	.05
34471	Fuse Clip, (Late Prod.)	1	.10
34488	.02—400 Volt Moulded Paper Cond.	2	.25
61207	1" x 8-32 Screw (Chassis Mtg.)	4	.01
63038	Shake Proof (Bronze)	5	.02
63863	Flat Washer (Chassis Mtg.)	4	.01
63928	Felt Washer (Mesh)	1	.02
66327	Eyelet for Dial Assy.	1	.02

12AS SPEAKER PARTS

20042	Speaker Clamp	1	.05
20045	Terminal Strip Cover	1	.10
20046	Terminal Strip Cover Insul.	1	.05
20047	Terminal Strip	1	.10
27209	Pot & Pole Piece Assem.	1	1.50
27242	Cone Mounting Gasket	1	.10
33642	12AS Speaker Complete	1	14.50
33672	Output Transformer	1	2.25
33674	Field Coil Assem.	1	2.25
34404	Cone & Voice Coil Assem.	1	2.25

PRICES SUBJECT TO CHANGE WITHOUT NOTICE

©John F. Rider, Publisher

GENERAL HOUSEHOLD UTILITIES CO.

MODEL 1241
Chassis 12A
Schematic, Voltage

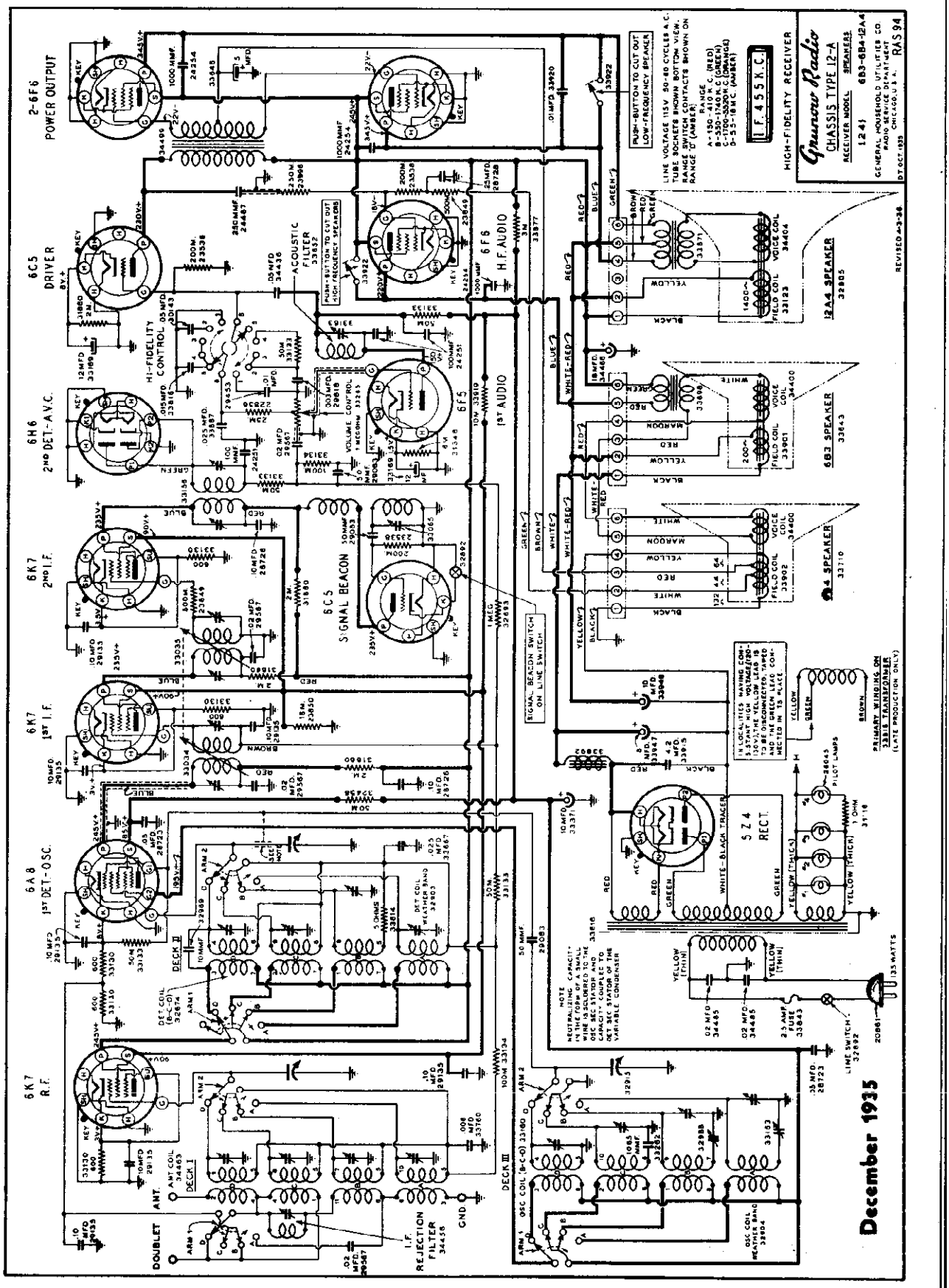

MODEL 1241
Chassis 12A
Socket, Trimmers
Chassis

GENERAL HOUSEHOLD UTILITIES CO.

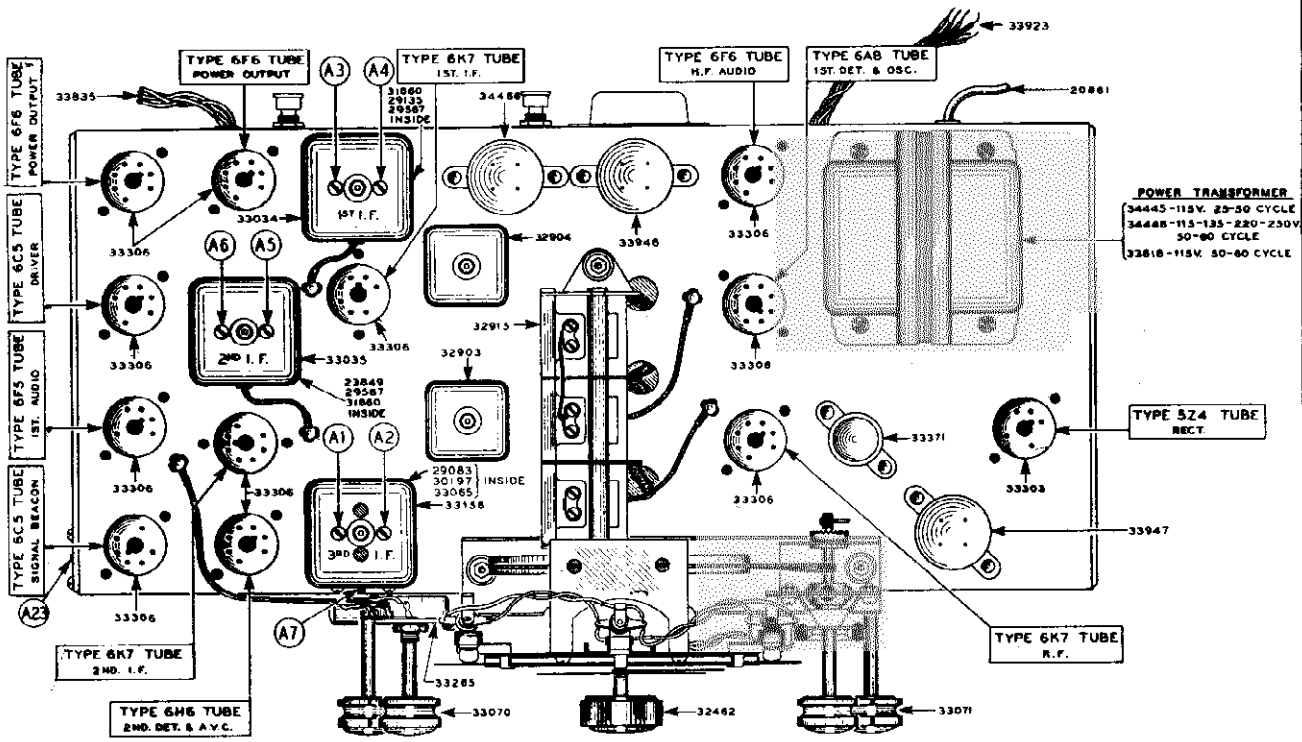

FIG. 5

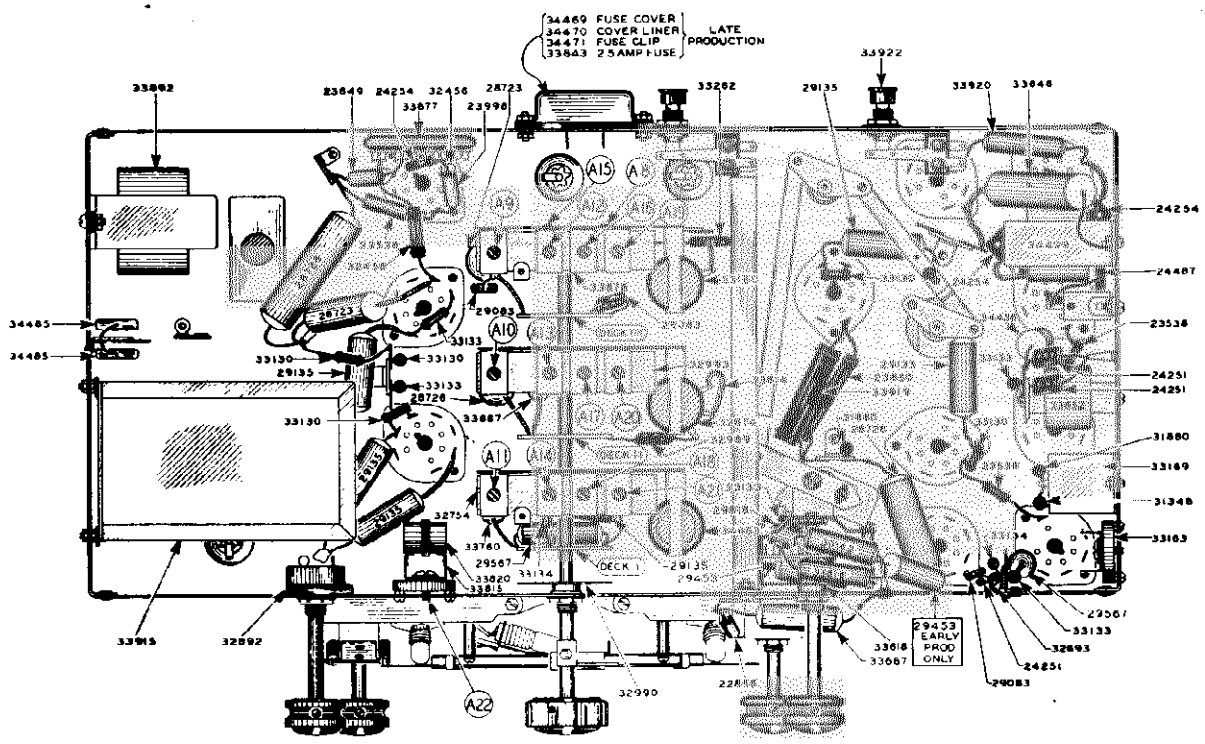

FIG. 6

©John F. Rider, Publisher

GENERAL HOUSEHOLD UTILITIES CO.

MODEL 1241
Chassis 12A
Alignment, Notes
Parts List

CIRCUIT ALIGNMENT PROCEDURE

Do not attempt to align the 12A Chassis without the proper equipment. Alignment condensers are shown in the accompanying illustrations and are numbered in order of procedure—I.F. Condensers on top of the I.F. Transformers.

1. EQUIPMENT:

(A) Test Oscillator.

A modulated Oscillator capable of producing signals at the I.F. Broadcast, Short-Wave, and Weather Band frequencies is necessary for alignment of the 12A Chassis.

(B) Insulated Screw Driver—(all bakelite or fibre) about 6" long.

(C) Output Meter.

This may be any of the standard Output Meters, but should be sufficiently sensitive to provide a good deflection at low signal strength.

(D) Coupling Means.

Coupling Condensers of 200 mmf., .25 mfd., and a 400 Ohm resistor should be used when coupling oscillator to receiver during alignment as specified in the procedure.

(E) The Receiver should be aligned in a location free from local interference (interference caused by motors—flashers—automobile ignition, etc.) as high frequency disturbances will cause difficulties when the short wave section is being adjusted. (A screen room is to be recommended.)

2. DIAL SETTING:

Turn dial knob until condensers are fully meshed. The dial pointer (Hour Hand) should be on the horizontal line of the dial, pointing to 9 and 3 o'clock. The minute hand should be at 12 o'clock or in a vertical position.

3. I.F. ALIGNMENT:

EXPLANATION

The GRUNOW High-Fidelity system is incorporated in this Chassis and the following procedure must be strictly adhered to.

The I.F. circuit of this chassis is known as an "expanded I.F. system." In order to reproduce programs of a "High-Fidelity nature" it is not only necessary to build an audio system capable of reproducing all the notes of the audio-spectrum at a mean output level, but it is also necessary to build a radio-frequency system that will pass signals without cutting off the sidebands. In other words, the selectivity of the receiver must be broad enough to pass all high-fidelity signals when desired—and so designed that the selectivity may be increased at will, so that nearby powerful transmitting stations will not interfere with other local or distant stations. This variable selectivity is accomplished by changing the mutual inductance in two of the I.F. Transformers—the coupling being changed by means of a control knob on the front of the receiver, which also acts as a tone control.

This control varies the transformer coupling, giving maximum selectivity on position No. 1, and broadest selectivity and highest fidelity on position No. 6.

When aligning the I.F. transformers see that the control is in position (No. 1) of greatest selectivity.

Fig. No. 1 shows a graphical picture of the results obtained, first with the control on No. 1 position, or maximum selectivity, second, on No. 6 position, showing the selectivity of the receiver broadened to its greatest extent, permitting the higher frequency sidebands to be passed through the selective circuit with the result that tone quality is greatly improved.

It will be noted that both peaks (Fig. 1) are practically the same height, and that both slopes are symmetrical.

The third graph represents a condition wherein the I.F. transformers are NOT properly peaked, and it will be noted that one peak is proportionately too high and the other has been practically lost. This illustration is shown merely as an example of what to expect when the receiver is not properly aligned.

Before any adjustment of circuit constants is attempted, allow the Chassis to "heat up" to normal operating temperature. The heating period should take from 20 to 30 minutes and is necessary to allow all coils and condensers to reach their normal temperature so that when alignment is completed, there will be no inductance or capacity changes due to thermal expansion or contraction.

It is good to remember this heating condition when logging stations—that is, do not attempt to log or tune in a station previously logged on a "cold" chassis as the station being tuned in would "drift" and the calibration on the previously logged station would be incorrect.

(A) Connect signal lead of test oscillator to grid of 6A8 (1st Detector tube) through .25 mfd. condenser. Connect the ground lead to the chassis.

(B) Set dial pointer to 1400 K.C. and range switch on "Green" (No. 2) position.

(C) Place test Oscillator in operation at 460 K.C. Turn receiver volume control to maximum and HI-FIDELITY CONTROL to POSITION No. 1, which is the maximum selectivity position.

(D) Attenuate test Oscillator output to lowest value consistent with obtaining a readable indication on output meter.

(E) Adjust six I.F. Trimmers, A1, A2, A3, A4, A5, A6, located on the I.F. Transformers on top of Chassis, Fig. (4) until maximum output is obtained. During alignment, maintain as low a value of signal as will allow obtaining of accurate adjustment.

(F) Turn the on and off switch clockwise to the Signal Beacon position.

(G) Adjust Signal Beacon trimmer (A7) Fig. 4, which is located on side of I.F. transformer (near dial) to Zero beat with the 460 K.C. incoming signal.

4. 175 K.C. ALIGNMENT:

(A) Connect signal lead of test Oscillator through 200 mmf. Condenser to Antenna binding post on Chassis.

(B) Connect the test Oscillator ground lead to the ground post of Chassis.

(C) Place test Oscillator in operation at 175 K.C.

(D) PLACE HI-FIDELITY CONTROL IN POSITION NO. 2.

(E) Turn range switch to "Red" (No. 1) position.

(F) Tune in signal to maximum (this point does not have to be exactly at 175 K.C. dial setting.)

(G) Adjust the 175 K.C. Padding Condenser (A8) Fig. 5 (which is on rear of Chassis) in direction of signal increase. At same time rock the tuning condenser back and forth through resonance while adjusting padding condenser until maximum output is obtained.

5. 350 K.C. ALIGNMENT

(A) Place test Oscillator in operation at 350 K.C.
(B) Turn dial pointer to 350 K.C.
(C) Turn range switch to "Red" (No. 1) position.
(D) Place Hi-Fidelity Control in position No. 2.
(E) Adjust "weather band" oscillator trimmer (A9), Fig. 5, to maximum output.
(F) Adjust Detector Trimmer (A10) Fig. 5 to maximum output.
(G) Adjust Antenna Trimmer (A11), Fig. 5 to maximum output.

6. RECHECK 175 K.C. PADDER CONDENSER—See 4—Above.

7. 1400 K.C. ALIGNMENT:

(A) Place test oscillator in operation at 1400 K.C.
(B) Turn dial pointer to 1400 K.C.
(C) Turn range switch to range "Green" (No. 2) position.
(D) Hi-Fidelity Control remains in No. 2 position.
(E) Adjust broadcast oscillator trimmer (A12) Fig. 5 to maximum output.
(F) Adjust 1st Det. Trimmer (A13) Fig. 5 to maximum output.
(G) Adjust Antenna Trimmer (A14) Fig. 5 to maximum output.

8. 600 K.C. ALIGNMENT:

(A) Place test oscillator in operation at 600 K.C.
(B) Tune in signal to maximum (this point does not have to be exactly at 600 K.C. dial setting).
(C) Adjust the 600 K.C. Padding Condenser (A15), Fig. 5, which is on rear of Chassis, in direction of signal increase. At same time rock the tuning condenser back and forth through resonance while adjusting padding condenser until maximum output is obtained.

9. RECHECK 1400 K.C. ALIGNMENT—See 7—Above.

10. 5000 ALIGNMENT:

(A) Set Range Switch to "Orange" (No. 3) position.
(B) Place test Oscillators in operation at 5000 K.C.
(C) Turn Dial Pointer to 5000 K.C.
(D) Adjust Set Oscillator Trimmer (A16) Fig. 5 to maximum output.
(E) Adjust Detector Trimmer (A17) Fig. 5 to maximum output.
(F) Adjust Antenna Trimmer (A18) Fig. 5 to maximum output.

11. 18 M.C. ALIGNMENT

(A) Connect signal lead of test oscillator through 400 Ohm Resistor to Antenna binding post of Chassis.
(B) Connect the ground lead to ground terminal of Chassis.
(C) Set Range Switch to "Amber" (No. 4) position and turn dial pointer to 18 M.C.
(D) Place test Oscillator in operation at 18 M.C.
(E) Adjust set oscillator Trimmer (A19) Fig. 5 to maximum output.
(F) Adjust Detector Trimmer (A20) Fig. 5 to maximum output.
(G) Adjust Antenna Trimmer (A21) Fig. 5 to maximum output.
(H) On the 18 M.C. Oscillator Alignment will be noted that there are two settings at which the signal will be received. Use the lower of the images for alignment point, that is, the setting giving most capacity or the point at which the trimmer screw is farthest in.

12. ALIGNMENT OF "I.F. REJECTOR FILTER" CIRCUIT:

Due to interference caused by commercial code stations operating on wave lengths near the frequency at which the I.F. amplifiers of this receiver are aligned, an I.F. filter has been incorporated in the antenna circuit to act as a rejector system, thereby lessening the possibility of this form of interference entering the receiver.

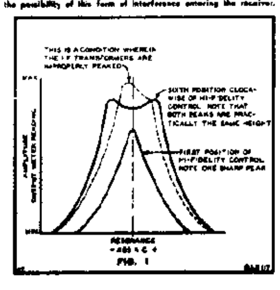

FIG. 1

The filter should be tuned to the same frequency as the I.F. Transformers, and this operation should be performed after the set has been completely aligned.

(A) Connect signal lead of test oscillator to antenna binding post through a 200 mmf. condenser.

(B) Connect ground lead to ground terminal of chassis.

(C) Set dial pointer to 1400 K.C. and range switch on Green (No. 2) position.

(D) Place test oscillator in operation at 460 K.C.—turn receiver volume control to maximum and Hi-Fidelity control to No. 2 position.

(E) Attenuate test oscillator output so that a fairly strong signal is applied, and tune filter condenser (A22) Fig. (4) so that the output meter indicates a minimum reading.

13. TUNING ACOUSTIC FILTER:

The I.F. system of a Hi-Fidelity receiver is expanded or broadened so that audio frequencies of the higher musical range will be passed through the selective circuits. It is desirous to pass audio frequencies only up to a value of 10,000 cycles, so that the entire musical range may be reproduced, at the same time frequencies above this value must be cut off—so that station noises and atmospheric disturbances are not admitted to the speaker system.

An acoustic filter is incorporated in this chassis, that may be tuned so that frequencies above 10,000 cycles are excluded. This filter is tuned as follows:

(A) After all other adjustments are completed, apply a 10,000 cycle note, produced by an audio oscillator or phonograph frequency record, connecting one of the signal leads to the grid of the 6F5 (1st A.F. tube) and the ground lead to the chassis.

(B) Set Hi-Fidelity control to maximum (No. 6) position.

(C) Attenuate audio signal so as to obtain a good reading on the output meter.

(D) Tune acoustic filter condenser (A23) Fig. (4) until a MINIMUM output is indicated on the output meter.

SPEAKER SYSTEM

The 12A Chassis is designed to work into the Grunow triple speaker system. This complete system consists of a dual audio arrangement wherein a two channel audio amplifier is used—one channel comprising a 6F6 tube coupled to two small speakers reproduces the high notes of the musical range and the other channel comprising two types 6F6 tubes in push-pull coupled to a large speaker reproduces the low and middle register of the musical range. If it becomes necessary to replace or change any part of the speaker system, care should be taken to see that the polarity of all transformers, voice coils and tube connections remain as originally connected, otherwise there is a possibility of the speakers working out of "phase," causing one of the speakers to cancel out certain frequency response of the other.

To determine whether the speakers are in phase—short out the voice coil on the large speaker and reverse the voice coil leads on one of the small speakers, connecting the lead on the small speaker in the position of strongest and best response. Then with the large speaker working with the two small speakers, change the polarity of the large speaker voice coil, connecting it in the position of strongest and best response.

When making this test it is a good idea to have the receiver tuned to a good musical broadcast program.

CONTINUITY AND VOLTAGE

Continuity and voltage readings should be taken from the underside of the chassis. The values given on the schematic diagram are average and allow the service man to make a quick check of the chassis constants. The socket layouts given on the schematic diagram show each socket from the underside.

THE RANGE SWITCH

The Range Switch is a simple three deck multiple pole, positive acting switch, used to connect the various coils into their proper circuits, and is designed in such a way that the coils being used are isolated from coils of the two succeeding bands of a lower frequency. In the case of the detector circuit both the higher and lower frequency bands, above and below the circuit selected, are shorted out. This switching arrangement not only selects the proper coils for each band, but grounds the unused section, allowing the receiver to work at maximum sensitivity and selectivity on all four ranges.

The Range Switch and Coil Assembly is shown schematically in figure (2) of **Model 1171, Chassis 11-C** and it will be noted that deck I (Antenna) is the one toward the front of the chassis, deck II (Detector) in the center position and deck III (Oscillator) toward the rear of the chassis. The diagram shows the exact position of the coil and switch lugs, and little difficulty should be experienced in making any necessary repairs or inspection.

PARTS AND PRICE LIST

PRICES SUBJECT TO CHANGE WITHOUT NOTICE

Model 1241 Chassis 12A

PART NUMBERS ARE GIVEN ON THE ILLUSTRATIONS AND THE NUMBERS ARE BROUGHT DOWN IN NUMERICAL ORDER FOR CONVENIENCE

Part No.	Description	No. Used	Price
20861	Line Cord and Plug	1	$ .40
22886	Resistor 25M Ohm ½ Watt	1	.15
23530	Resistor 200M Ohm ¼ Watt	1	.15
23840	Resistor 500M Ohm ¼ Watt	2	.15
23850	Resistor 16M Ohm 1 Watt	1	.20
23858	Vertical Terminal Assy. (1 Lug)	1	.10
23998	Resistor 250M Ohm ¼ Watt	1	.15
24251	Condenser 100 Mmf. Mica	1	.15
24254	Condenser 1000 Mmf. Mica	1	.20
24487	Condenser 250 Mmf. Mica	1	.20
26933	Spring Washer (Var. I.F.)	1	.01
27422	Electrolytic Stop Insul. Washer	1	.02
27811	Pilot Lamp Socket Assem.	1	.10
28046	Pilot Lamp	1	.15
28658	Dial Pointer Screw	1	.02
28723	Condenser .05 Mfd. 400 Volt Tubular	2	.25
28726	Condenser .1 Mfd. 400 Volt Tubular	2	.30
28728	Condenser .25 Mfd. 200 Volt Tubular	1	.35
29068	Electrolytic Condenser Clamp (1⅜")	1	.06
29083	Condenser 60 Mmf. (Mica)	1	.20
29135	Condenser .1 Mfd. 200 Volt Tubular	2	.25
29209	Speaker Cable Clamp	1	.02
29463	Condenser .01 Mfd. 100 Volt Tubular	2	.20
29522	Ball 11/32" (Drive)	4	.02
29551	Antenna & Doublet Binding Post Assem.	1	.10
29567	Condenser .02 Mfd. 400 Volt Tubular	4	.25
29818	Condenser .003 Mfd. 700 Volt Tubular	1	.25
30143	Condenser .05 Mfd. 200 Volt Tubular	1	.25
30197	Condenser 1320 Mmf. Mica	1	.25
30612	Spring Washer (Var. I.F.)	1	.01
31116	Resistor 1 Ohm (Ohmite)	1	.20
31148	Resistor 5M Ohm ¼ Watt	1	.15
31424	Insulating Shield (Elec. Condenser)	2	.10
31714	Gear Tension Spring	2	.05
31739	Rubber Mtg. Washer (Var. Cond.)	6	.02
31762	Coil Shield & Eyebolt Assem. (3rd I.F.)	1	.30
31777	Terminal Board (8 Lug)	1	.10
31860	Resistor 2M Ohm ½ Watt	4	.15
32466	Resistor 50M Ohm ½ Watt	1	.15
32662	Knob (Range Switch)	1	.30
32893	1241 Cabinet Only	1	
32693	Resistor 1 Meg. 1/3 Watt (Insul.)	1	.15
32754	4 Gang Trimmer Assem. (Antenna)	1	.80
32868	Mounting Foot Assem. (Chassis Rubber)	4	.25
32865	Electrolytic Condenser Strap (1")	1	.05
32874	Detector Coil	1	2.00
32879	Cam (Shutter)	1	.05
32880	Range Switch Cover	1	.75
32892	Line & Signal Beacon Switch	1	1.30
32903	Detector Coil & Shield Assem. (W.B.)	1	1.35
32904	Oscillator Coil & Shield Assem. (W.B.)	1	1.35
32918	Variable Condenser	1	2.70
32918	Reflector Bracket Support	1	.10
32919	Drive Drum, Hub & Gear Assem.	1	.75
32924	Sleeve & Gear Assem.	1	.40
32927	Drive Shaft	1	.40
32928	Clutch Pin	1	.05
32929	Fulcrum Bracket (Va. I.F.)	1	.05
32930	Drive Mtg. Frame	1	.05
32931	⅛" Ball (Drive)	10	.01
32932	"C" Washer (Drive)	1	.05
32933	Toggle Arm (Drive)	1	.05
32934	Toggle Spring	2	.05
32935	Drive String and Eyelet Assy.	1	.10
32936	Reflector Bracket	1	.05
32937	Pinion, Gear & Adj. Plate Assem.	1	.70
32940	Pointer Pinion	1	.20
32950	Reflector Mask	1	.35
32952	Dial Frame—Welded Assy.	1	.30
32957	Shutter Spring	2	.02
32963	Pyralin Dial	1	.40
32959	Glass Clock Dial	1	1.00
32966	Shutter	1	.10
32968	Shutter Tension Spring	1	.05
32969	Spring Connecting Link	1	.01
32970	Dial Assem. Spacer	2	.03
32972	Minute Hand Pointer	1	.10
32978	Drive Spring	1	.10
32982	Hour Hand Pointer	1	.10
32986	Light Shield	1	.10
32988	Broadcast Padder Condenser	1	.35
32989	Condenser 10 Mmf. Mica	1	.20
32990	Range Switch	1	4.20
32991	4 Gang Trimmer Assem. (Detector)	1	.50
33034	1st I.F. Variable Transf. and Shield Assem.	1	3.75
33035	2nd I.F. Variable Transf. & Shield Assem.	1	4.25
33064	Grid Cap	5	.01
33065	Signal Beacon Padder Condenser	1	.40
33070	Knob (Volume & Station Selector)	2	.20
33071	Knob (Tone & Line Switch)	2	.20
33072	Cabinet Escutcheon	1	.20
33073	Escutcheon Retaining Spring	1	.20
33074	Dial Window	1	.20
33075	Window Retaining Ring	1	.10
33076	Window Gasket	1	.10
33109	Coil Shield & Bracket Assem. (Det. & Osc. Coil)	2	.30
33130	Resistor 600 Ohm ¼ Watt	5	.15
33131	Resistor 80M Ohm ¼ Watt	6	.15
33134	Resistor 100M Ohm 1/3 Watt	2	.15
33156	3rd I.F. and Signal Beacon Trans. Assy.	1	3.50
33160	Oscillator Coil	1	1.70
33163	Padder Condenser	2	.35
33169	Cond. 12 Mfd. Dual 25 V. Dry Electrolytic	1	1.00
33179	Band Indicator—Amber	1	.10
33180	Band Indicator—Orange	1	.10
33181	Band Indicator—Red	1	.10
33182	Band Indicator—Green	1	.10
33205	Crank Arm (Var. I.F.)	2	.05
33206	Gear Mtg. Bracket (Var. I.F.)	1	.05
33209	Pinion & Hub Assem. (Va. I.F.)	1	.30
33212	Drive Gear (Var. I.F.)	1	.15
33214	Shoulder Screw (Var. I.F.)	1	.01
33218	Connecting Rod (Var. I.F.)	1	.25
33219	Connecting Rod (Var. I.F.)	1	.25
33221	Connecting Rod (Var. I.F.)	1	.25
33261	Condenser 1061 Mmf. (Mica)	1	.30
33266	Volume Control	1	.90
33279	Terminal Assy (1 Lug)	1	.10
33301	6 Prong Socket (6Z4)	1	.10
33306	8 Prong Socket	11	.10
33340	Mtg. Condenser Cathode Terminal	2	.02
33371	Mtg. Condenser 10 Mfd. 250 V.	1	.05
33419	Pilot Light Socket Assem. (Bottom)	1	.10
33427	Coil Shield & Eyebolt Assem. (I.F. Variable)	1	.15
33488	Terminal Strip Assem. [illegible]	1	.10
33618	Switch [illegible]	1	1.30
[illegible]	[illegible]	1	1.50
[illegible]	[illegible] Electrolytic	1	.60
[illegible]	[illegible]	2	.10
[illegible]	[illegible]	1	1.00
[illegible]	[illegible]	1	.10
[illegible]	[illegible]	1	.10
[illegible]	[illegible] Volt Tubular	2	.25
[illegible]	[illegible], 700 Volt Tubular	1	.25
33814	[illegible] (Mica)	1	.10
33815	[illegible] Condenser	1	.45
33816	[illegible] Mfd. 400 Volt Tubular	1	.25
33818	[illegible] (115V-50-60 Cycle)	1	9.00
33820	[illegible] Coil Assy.	1	.40
33835	[illegible] (4 Wire)	1	.35
33837	[illegible] (Early)	1	.60
33843	[illegible]	1	.10
33877	[illegible] 1 Watt	1	.30
33878	[illegible] Condenser (Osc.)	1	.30
33892	[illegible]	1	2.60
33916	[illegible] Assy. 4.2 Mfd.	1	2.75
33917	[illegible]	1	.35
33919	[illegible] 2 Watt	1	.35
33920	[illegible] Mfd. 500 V. Tubular	1	.25
33922	[illegible]	2	1.20
33923	[illegible] Wire)	1	.35
33946	[illegible] Mfd. 500 V. Wet Elec.	1	1.15
33967	[illegible] 525 V. Wet Elec.	1	1.25
33968	[illegible] (1 Lug)	2	.10
33954	[illegible]	1	.05
34401	[illegible]	1	1.00
34436	[illegible] Mfd. 400 V. Tubular	1	.35
34445	[illegible], 115-V.-25-60 Cycle	1	16.00
34446	[illegible], 110-135-220-250 Volt [illegible]		16.00
34458	[illegible] Coil & Condenser Assy.	1	.80
34459	[illegible] Cable Assembly	1	.25
34463	[illegible]	1	3.60
34466	[illegible] Mfd. 375 V. Wet Elec.	1	1.10
34469	[illegible] Production)	1	.10
34470	[illegible] (Late Production)	1	.05
34471	[illegible] Production)	1	.10
34485	[illegible] Mfd. 400 V. (Molded Paper)	2	.35
34499	[illegible]	1	5.00
61838	[illegible] (Knob)	5	.02
61928	[illegible] (Drive)	1	.02
66337	[illegible] Assem.	1	.02

TYPE 6B3 SPEAKER

Part No.	Description	No. Used	Price
28844	[illegible] Assem.	1	1.20
28854	[illegible]	1	.10
28878	[illegible] Assem.	1	1.00
31202	[illegible]	1	.30
31643	[illegible] Complete	1	8.00
31898	[illegible]	1	1.75
31901	[illegible]	1	2.00
34400	[illegible] Assem.	1	1.00

TYPE 6B4 SPEAKER

Part No.	Description	No. Used	Price
28844	[illegible] Assembly	1	.10
28884	[illegible]	1	1.00
28878	[illegible] Assem.	1	1.00
31202	[illegible] Assem.	1	.30
31710	[illegible] Complete	1	8.00
31718	[illegible]	1	.30
31898	[illegible]	1	1.75
31902	[illegible]	1	2.10
34400	[illegible] Assem.	1	1.00

TYPE 12A4 SPEAKER

Part No.	Description	No. Used	Price
28047	[illegible] Assem.	1	.10
28048	Terminal Strip Shield	1	.05
27280	Speaker Pot & Pole Piece Assem.	1	1.60
27242	Cone Mtg. Gasket	1	.10
33606	12A4 Speaker Complete	1	14.80
33123	Field Coil Assem.	1	4.25
33671	Output Trans.	1	2.00
34404	Cone & Voice Coil Assem.	1	3.00

SEE MODEL 1171, CHASSIS 11-C FOR MECHANICAL ALIGNMENT DIRECTIONS OF I.F. TRANSFORMERS; SCHEMATIC DIAGRAM OF RANGE AND SWITCH & COIL ASSEMBLY; AND DETAIL DRAWING OF DIAL & DRIVE PARTS.

©John F. Rider, Publisher

MODELS 1291,1297
Chassis 12B, 12W
Socket,Trimmers
Chassis

GENERAL HOUSEHOLD UTILITIES CO.

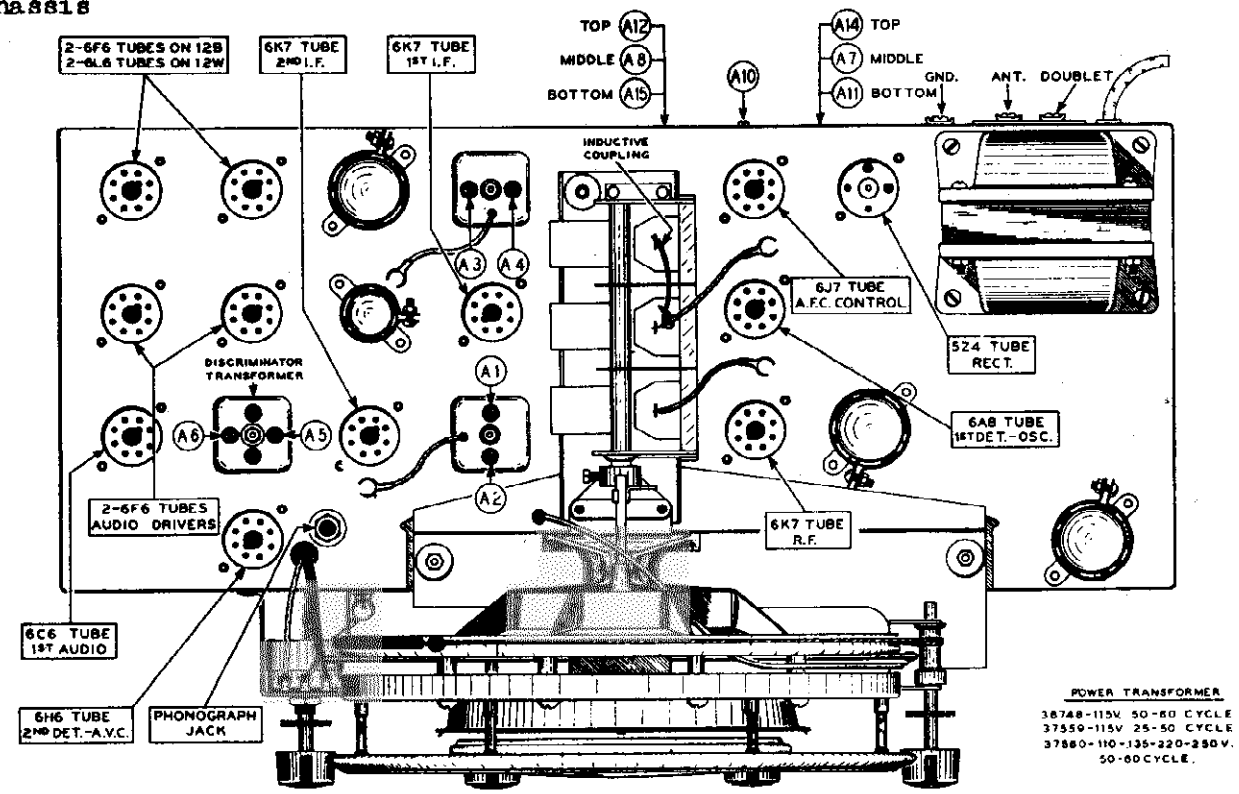

NOTE:
ALL TUBE SOCKETS ARE #33306 - EXCEPT RECT. TUBE.

CHASSIS TOP VIEW

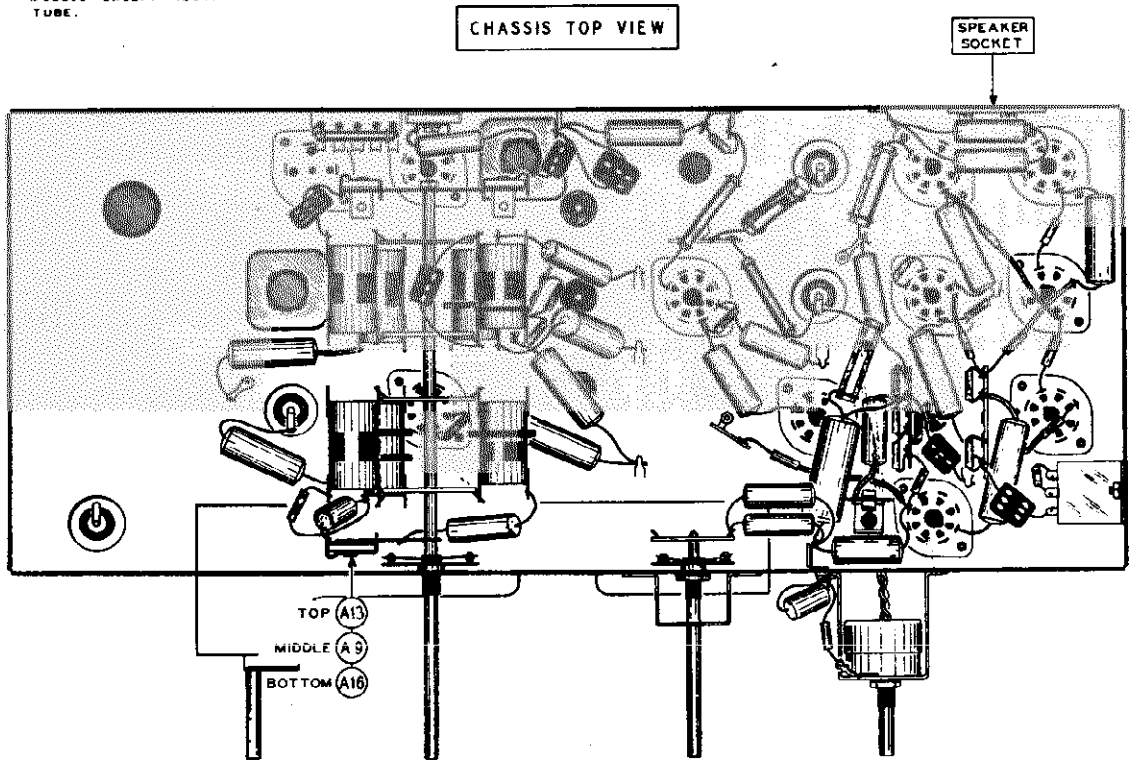

CHASSIS BOTTOM VIEW

CHASSIS 12B & 12W
AUGUST - 1936
RAS 187

©John F. Rider, Publisher

GENERAL HOUSEHOLD UTILITIES CO.

MODELS 1291,1297
Chassis 12B, 12W
Schematic,Parts

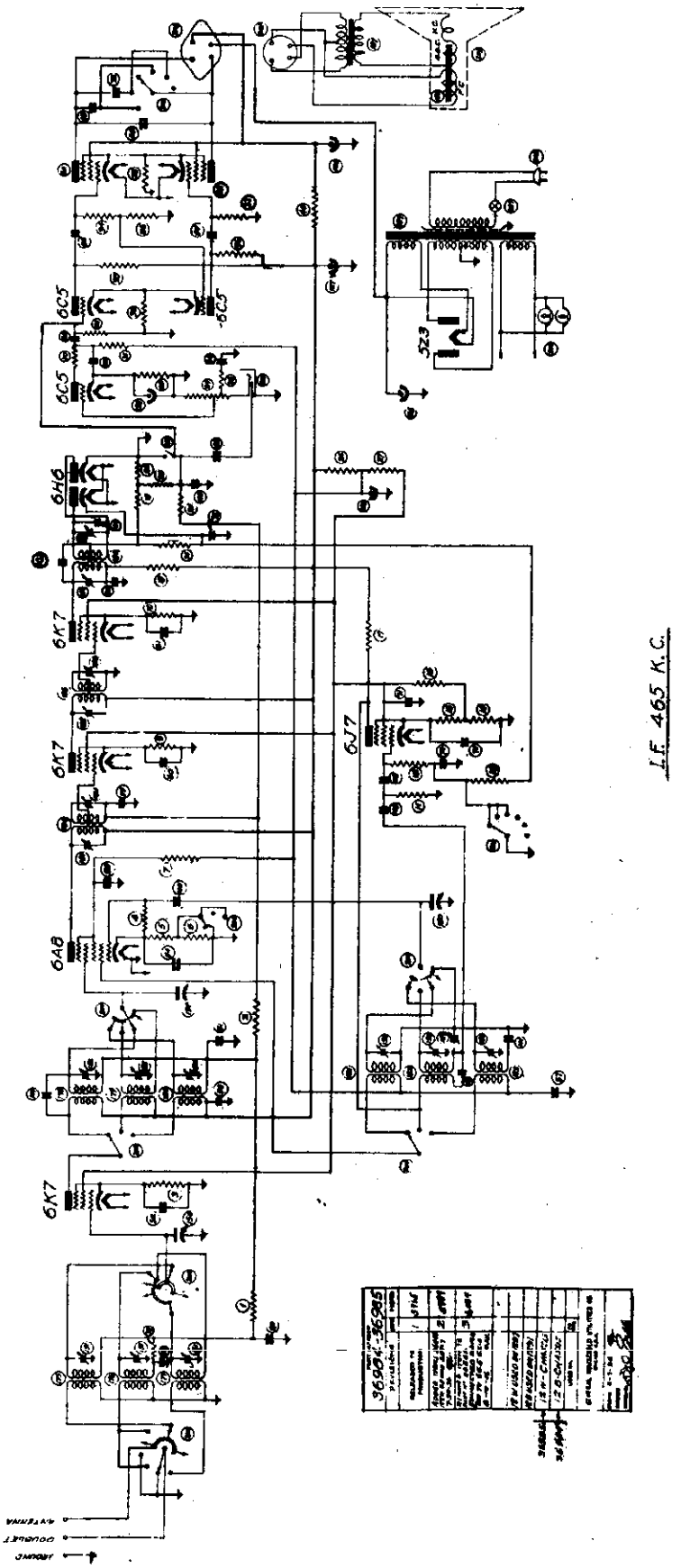

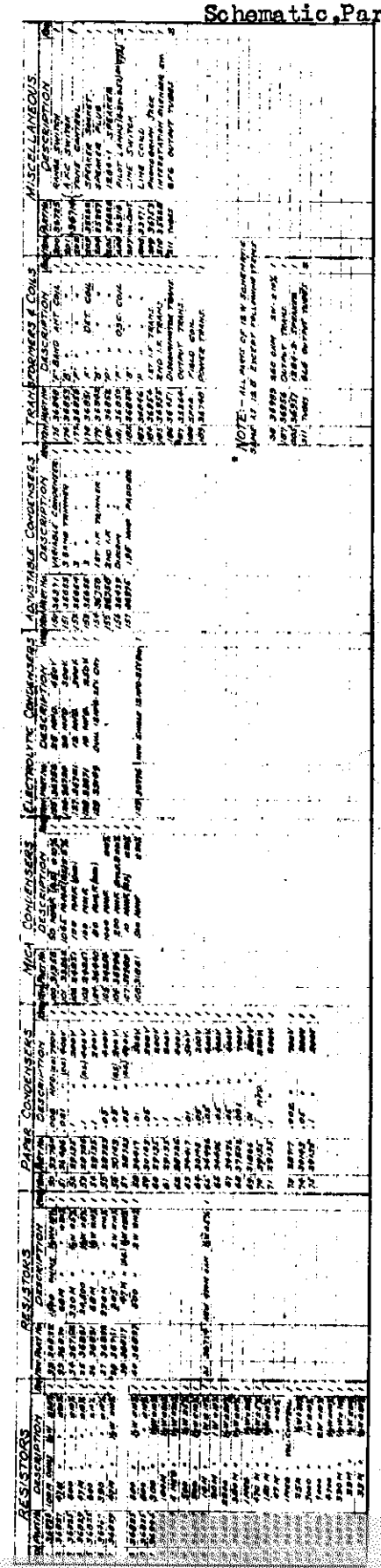

©John F. Rider, Publisher

GRUNOW RADIO

Model 1291--1297

Chassis 12B--12W

Chassis 12-B and 12W are Teledial Receivers and are identical in mechanical and electrical construction except for the audio system. The 12B has two 6F6 tubes in the output and 12W- 2 6L6 tubes. (See note on schematic diagram) Standard practice should be followed for alignment, Trimmer Condenser locations are covered on the diagram and are numbered in order of their procedure.

Alignment

The same standard equipment required in the alignment of other Grunow short wave receivers should be used with these Chassis, in addition to a Galvanometer, such as the the Weston type 699 with a 200 ohm variable wire wound shunt (200 ohm rheostat) to be used in balancing the discriminator circuit.

1. I. F. Alignment - Set signal generator at 465 K. C., connect signal lead to grid of 6A8 oscillator tube thru .05 mfd. condenser. Connect ground lead to chassis. Align I. F. Trimmers, (A1-A2-A3-A4-A5-A6) to maximum output.

NOTE: When adjusting I. F. Trimmers A5-A6 (Discriminator Transformer) very little response will be indicated on output meter, due to the broad tuning of this transformer.

2. Discriminator Alignment - (A) With signal generator connected as above, connect the 30-0-30 (60-0-60 micro amp.) Galvanometer to the two Cathodes of the 6H6 Discriminator tube. (one side of the meter may go to the chassis ground and the other side to the unground cathode.) (B) Turn Power switch to "Dial" position. (C) Attenuate signal Generator to maximum output being sure the frequency remains at exactly 465 K. C. (D) With an insulated screw driver (no metal) back off trimmer screw of Discriminator Secondary (A5 or A6) (see note) until trimmer is wide open.

NOTE: The Primary and Secondary of the discriminator Transformer may be in the reverse to that shown on the drawing - check this polarity by touching the trimmer screws with a metal screw driver - when the metal comes in contact with the screw on the secondary trimmer the Galvanometer pointer will fluctuate. Use only a NON-METALLIC screw driver for alignment.

(E) Adjust Discriminator primary (A5 or A6) to maximum swing of Galvanometer (either positive or negative) (F) Re-align secondary trimmer to position of zero current. Be sure that signal generator has not changed frequency. Do not readjust Primary trimmer unless the entire operation as above is repeated. (G) Vary the I. F. Frequency (Signal Generator) and make sure that discriminator current falls to zero at exact I. F. resonance. Also check to determine the maximum current either side of resonance, that is, one side of resonance will read maximum positive current and the other side will read maximum negative current. Both sides of resonance should read about the same.

3. 1500 K. C. Alignment - (A) Connect signal lead of signal Generator to thru .002 mfd. condenser to the Antenna Binding post. (B) Place Generator signal at 1500 K. C. (C) Turn Dial pointer to 1500 K. C. (D) Range switch to Broadcast position. (E) Adjust B. C. Oscillator trimmer (A7) to maximum output. (F) Adjust B. C. Interstage Trimmer (A8) to maximum output. (G) Adjust B. C. Antenna Trimmer (A9) to maximum output.

4. 600 K. C. Alignment - (A) Place Generator signal to 600 K. C. (B) Dial pointer to 600 K. C. (C) Adjust Padding Condenser (A10) in direction of signal increase and at same time rock tuning condenser thru resonance to maximum output. Dial setting does not have to be exactly 600 K. C.

5. Recheck 1500 K. C. Alignment. See (3) above.

6. 5000 K. C. Alignment - (A) Connect signal lead to Antenna Binding post thru 400 ohm resistor. (B) Set range switch to Police-Amateur position. (C) Place signal in operation at 5000 K. C. (D) Turn dial pointer to 5000 K. C. (E) Adjust Oscillator trimmer (A11) to maximum output. (F) Adjust Interstage Trimmer (A12) to maximum output. (G) Adjust Antenna Trimmer (A13) to maximum output.

7. 18 Megacycle Alignment - (A) Connect signal lead to Antenna Binding post thru 400 ohm resistor. (B) Set range switch to Foreign Short Wave position. (C) Place signal Generator in operation at 18 M. C. (D) Adjust Oscillator Trimmer (A14) to maximum output. (E) Adjust Interstage Trimmer (A15) to maximum output, while rocking tuning condenser thru resonance. (F) Adjust Antenna Trimmer (A16) to maximum output. On the 18 M. C. Oscillator adjustment, use the lower image for alignment, that is the point where the trimmer screw is farthest in.

MODEL 1541
Chassis 15
Schematic

GENERAL HOUSEHOLD UTILITIES CO.

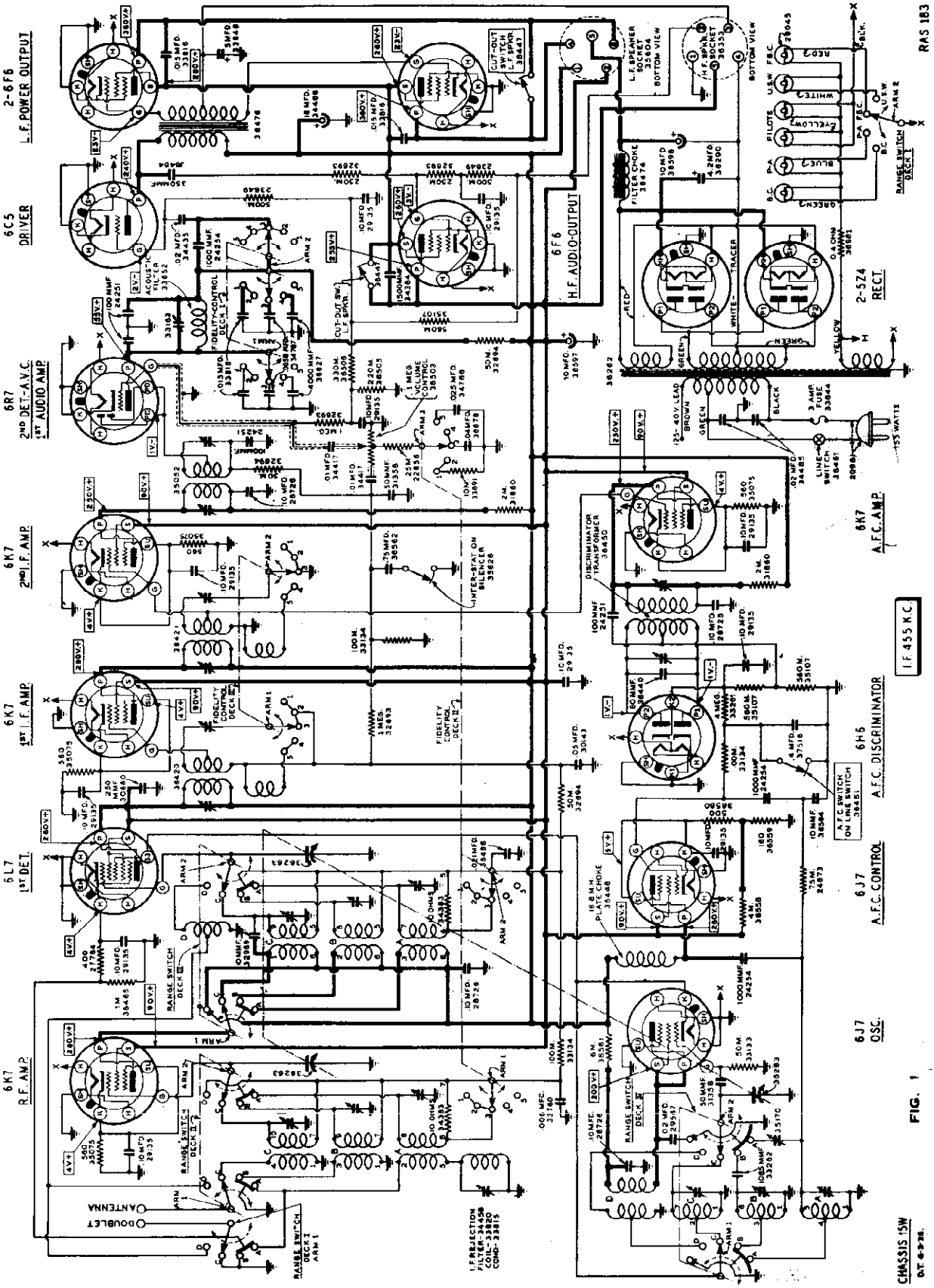

FIG. 1

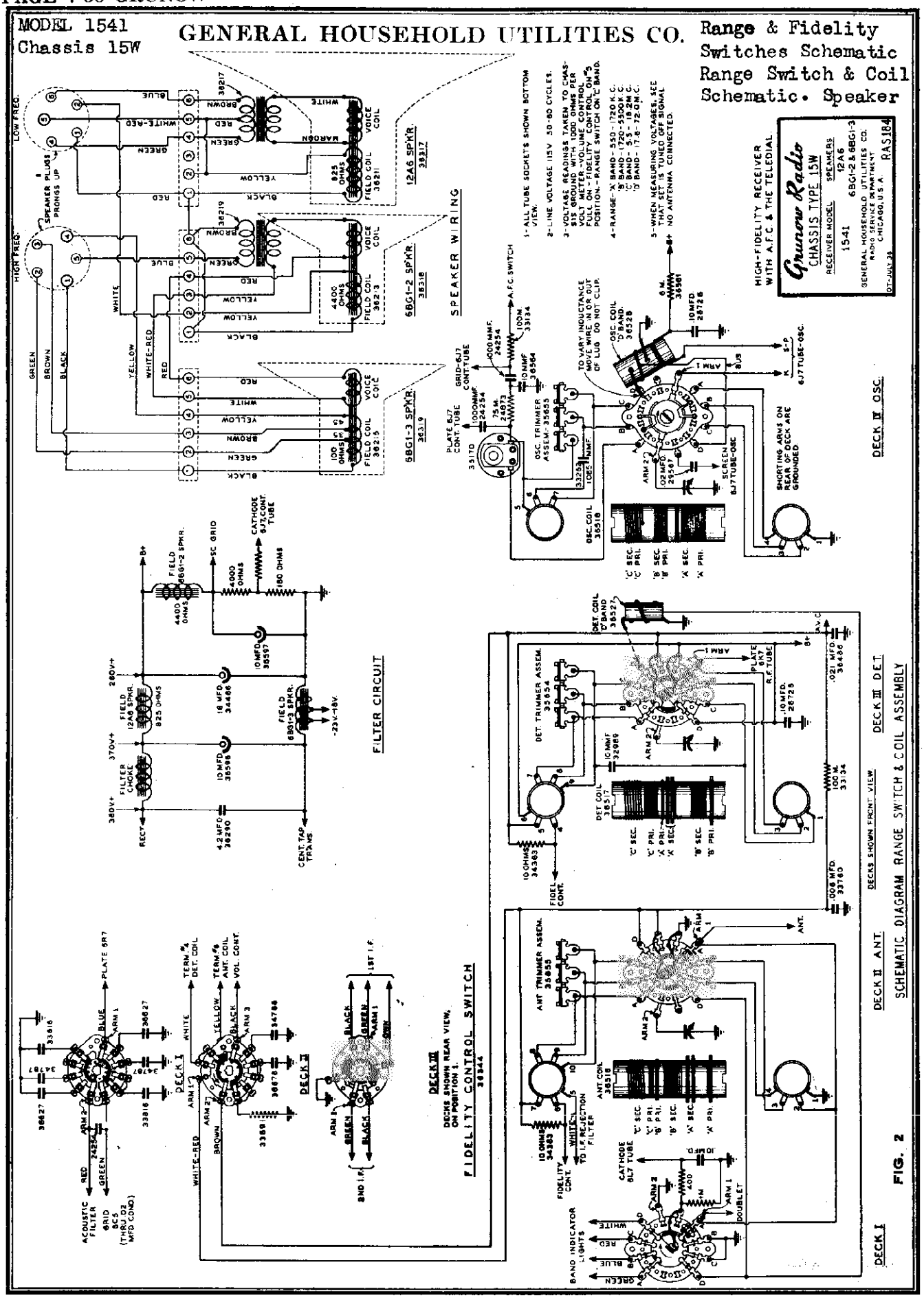

©John F. Rider, Publisher

GENERAL HOUSEHOLD UTILITIES CO.

MODEL 1541
Chassis 15W
Socket, Trimmers
Parts Details

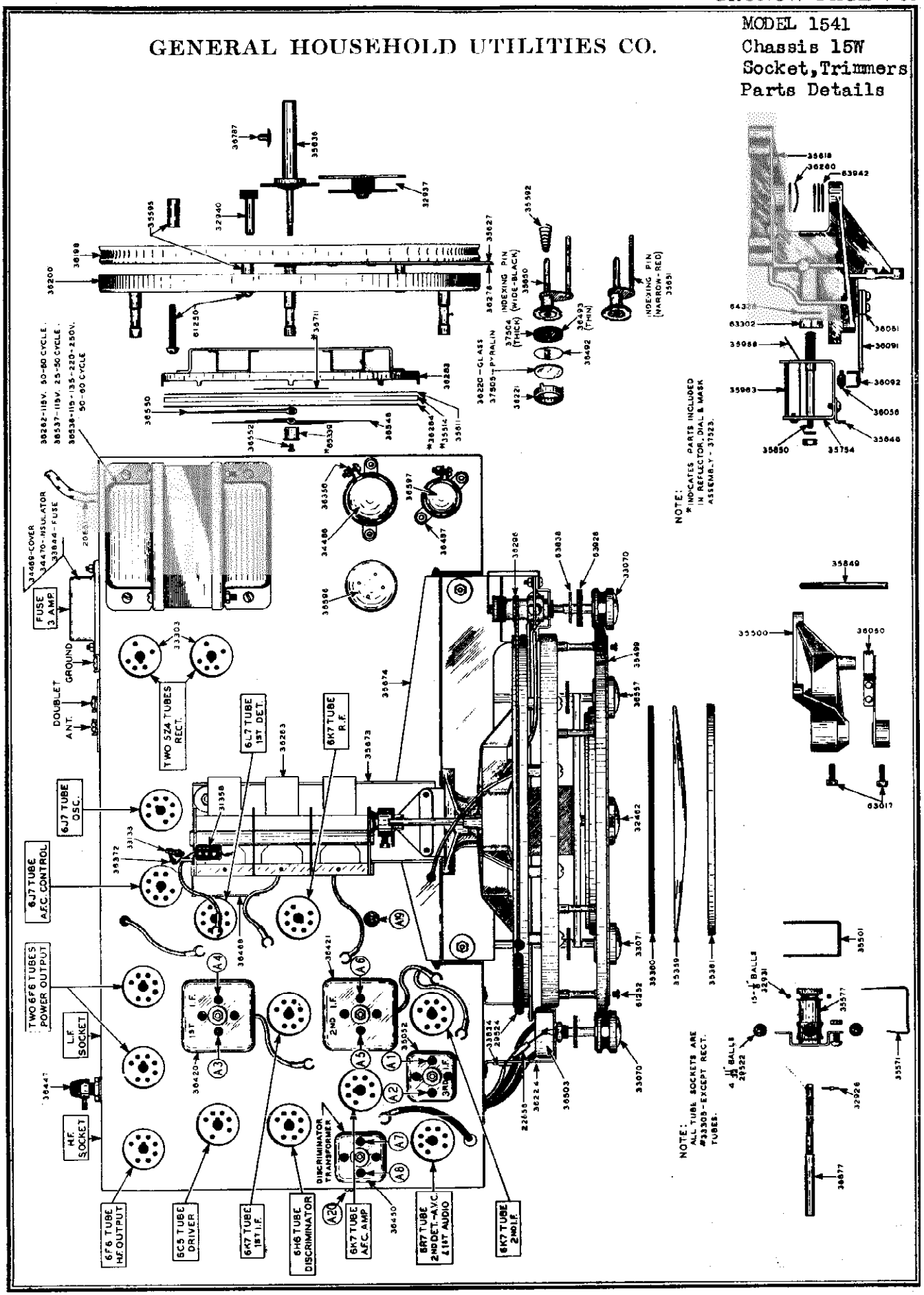

©John F. Rider, Publisher

MODEL 1541
Chassis 15W
Chassis
Alignment Curves

GENERAL HOUSEHOLD UTILITIES CO.

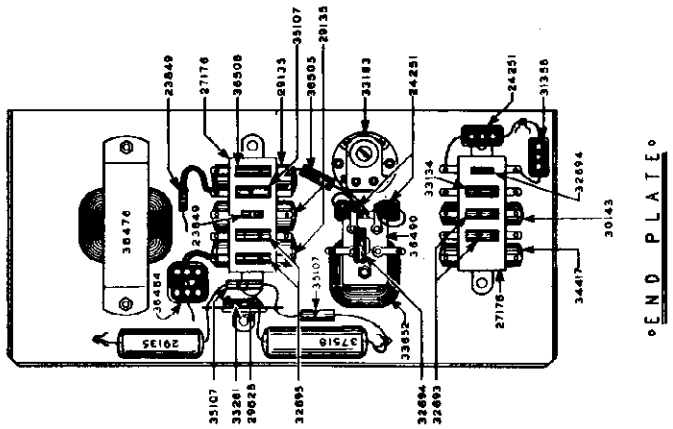

END PLATE

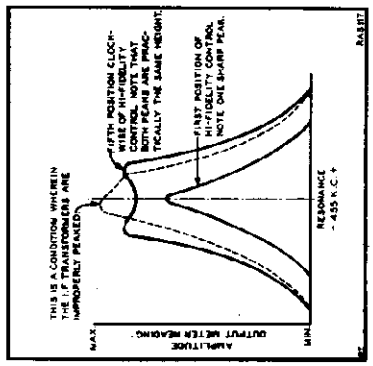

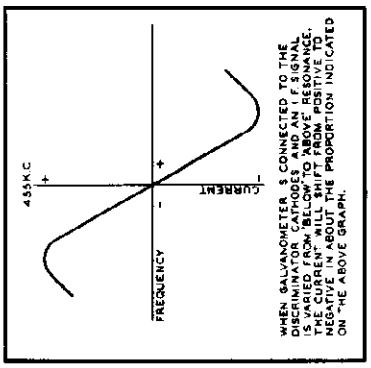

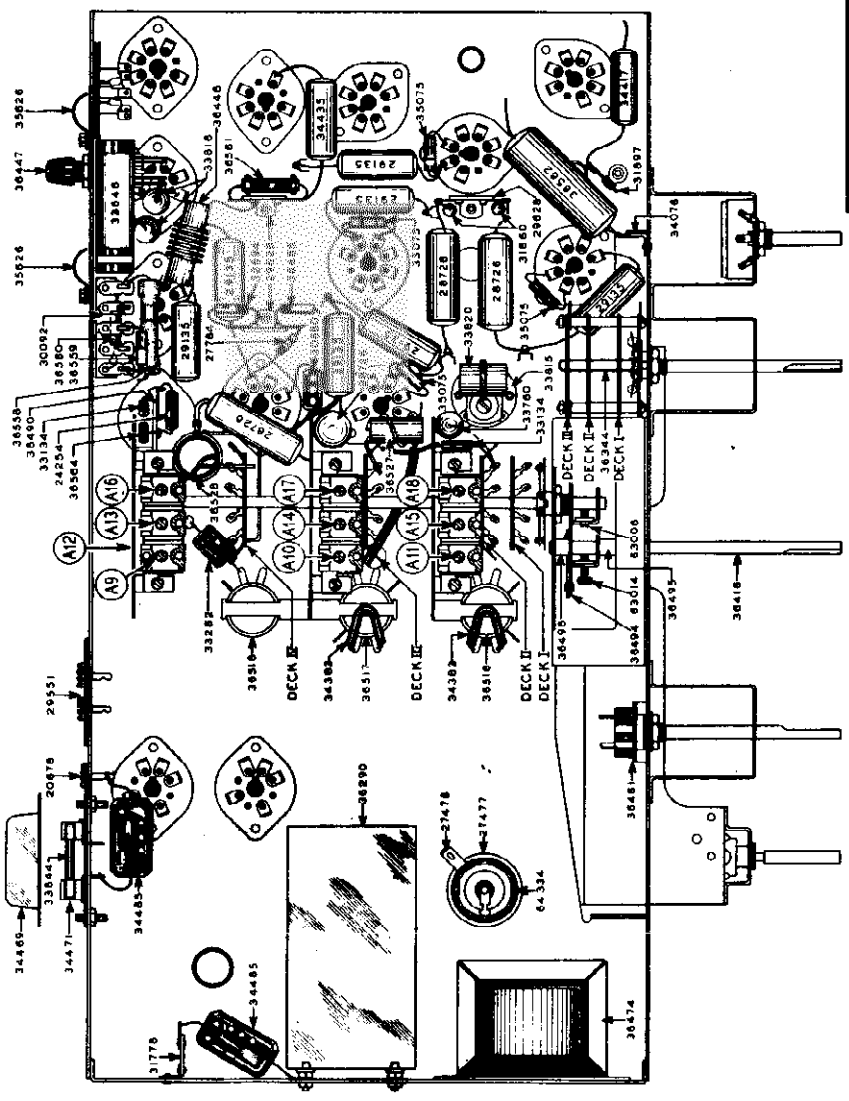

CHASSIS BOTTOM VIEW

Chassis 15-W

Receiver Model #1541

Speakers 12A6 - 6GB1-2 - 6-GB1-3

©John F. Rider, Publisher

GENERAL HOUSEHOLD UTILITIES CO.

MODEL 1541
Chassis 15W
Alignment,Part 1

INTRODUCTION

The Grunow 15-W Chassis is a fifteen Metal tube, 115 Volt, 50-60 cycle A. C., four band receiver with Automatic Volume Control, Variable I. F. system, of Hi-fidelity control, Tone Control, "Band Spread" dial and Automatic Frequency Control with the Teledial. The tubes and their functions are as follows: 1-6K7 R. F. Amplifier, 1-6L7 1st, Detector, 1-6J7 Oscillator, 1-6K7 1st. I. F. Amplifier, 1-6K7 2nd. I. F. Amplifier, 1-6R7 2nd. Detector, A.V.C. and 1st. A. F. Amplifier, 1-6C5 Driver Stage, 1-6F6 H. P. Audio Output, 2-6F6 L. F. Power Output, 1-6K7 Automatic Frequency Control Amplifier, 1-6H6 A. F. C. Discriminator, 1-6J7 A. F. C. Control and 2-5Z4 Rectifiers.

The frequency range is divided into four bands or divisions, one covering the "Standard Broadcast" Band (Green) 550 to 1720 K.C., one the "Police-Amateur" Band (Amber) 1720 to 5500 K.C., one the "Foreign Broadcast" Band (Yellow) 5.5 to 18.20 Megocycles and one the Ultra Short Wave Band (Blue) 17.6 to 72.0 Megocycles.

Continuity and Voltage.

Continuity and voltage readings should be taken from the underside of the chassis. The values given on the schematic diagram are average and allow the service man to make a quick check of the chassis constants. The socket layouts given on the schematic diagram show each socket from the underside.

SERVICE DATA

Speaker System

The 15-W Chassis is designed to work into the Grunow triple speaker system. This complete system consists of a dual audio arrangement wherein a two channel audio amplifier is used- one channel comprising a 6F6 tube coupled to two small speakers reproduces the high notes of the musical range and the other channel comprising two type 6F6 tubes in push-pull coupled to a large speaker reproduces the low and middle register of the musical range. If it becomes necessary to replace or change any part of the speaker system, care should be taken to see that the polarity of all transformers, voice coils and tube connections remain as originally connected, otherwise there is a possibility of the speakers working out of "phase" causing one of the speakers to cancel out certain frequency responses of the other.

To determine whether the speakers are in phase- short out the voice coil on the large speaker and reverse the voice coil leads on one of the small speakers, connecting the lead on the small speaker in the position of strongest and best response. Then with the large speaker working with the two small speakers, change the polarity of the large speaker voice coil, connecting it in the position of strongest and best response.

When making this test it is a good idea to have the receiver tuned to a good musical broadcast program.

CIRCUIT ALIGNMENT PROCEDURE

Do not attempt to align the 15-W Chassis without the proper equipment. Alignment condensers are shown in the accompanying illustrations and are numbered in order of procedure- I. F. Condensers on top of the I. F. Transformers.

1. EQUIPMENT

(A) Test Oscillator.

A modulated Oscillator capable of producing signals at the I.F., Broadcast and Short-Wave Band frequencies is necessary for alignment of the 15-W.

(B) Insulated Screw Driver-(all bakelite of fibre) about 5" long.

(C) Output Meter.

This may be any of the standard Output Meters, but should be sufficiently sensitive to provide a good deflection at low signal strength.

(D) Coupling Means.

Coupling Condensers of 200 mmf., .05 mfd., and a 400 Ohm resistor should be used when coupling oscillator to receiver during alignment as specified in the procedure.

(E) Discriminator meter.

This may be any Galvanometer with sufficient sensitivity to read the current swing of the Discriminator Circuit. A Type #699 Weston Galvanometer or equivalent is recommended. It is further suggested that a variable shunt of approximately 200 ohms (Wire Wound Rheostat) be connected across the Galvanometer until approximate balance is reached. The shunt will also act as a safety device and a "keeper" when the meter is not in actual use.

(F) The Receiver should be aligned in a location free from local interference (interference caused by motors-flashers-automobile ignition, etc.) as high frequency disturbances will cause difficulties when the short wave section is being adjusted. (A screen room is to be recommended.)

2. DIAL SETTING

Turn dial knob until condensers are fully meshed. The dial pointer (Hour Hand) should be on the horizontal line of the dial, pointing to 9 and 3 o'clock. The minute hand should be at 12 o'clock or in a vertical position.

3. I. F. ALIGNMENT:

Explanation

The GRUNOW High-Fidelity system is incorporated in this Chassis and the following procedure must be strictly adhered to:

The I. F. circuit of this chassis is known as an "expanded I. F. system". In order to reproduce programs of a "High-Fidelity nature" it is not only necessary to build an audio system capable of reproducing all the notes of the audio-spectrum at a mean output level, but it is also necessary to build a radio-frequency system that will pass signals without cutting off the sidebands. In other words, the selectivity of the receiver must be broad enough to pass all high-fidelity signals when desired- and be so designed that the selectivity may be increased at will, so that nearby powerful transmitting stations will not interfere with other local or distant stations. This variable selectivity is accomplished electrically in the 15-W chassis by a switch in the I. F. transformer circuit, coupling in two of the I. F. Transformers - the coupling being changed by means of a control knob on the front of the receiver which also acts as a tone control. When aligning the I. F. transformers see that the control is in position (No. 3) of greatest selectivity. Fig. No. 3 shows a graphical picture of the results obtained, first with the control on No. 2 position, or maximum selectivity, second on No. 5 position, showing the selectivity of the receiver broadened to its greatest extent, permitting the higher frequency sidebands to be passed through the selective circuit with the result that tone quality is greatly improved. It will be noted that both peaks (No. 5) are practically the same height and that both slopes are symmetrical. The third graph represents a condition wherein the I. F. transformers are NOT properly peaked, and it will be noted that one peak is proportionately too high and the other has been practically lost. This illustration is shown merely as an example of what to expect when receiver is not properly aligned. Before any adjustment of circuit constants is attempted, allow the Chassis to "heat up" to normal operating temperature. This heating period should take from 20 to thirty minutes and is necessary to allow all coils and condensers to reach their normal temperatures so that when alignment is completed, there will be no inductance or capacity changes due to thermal expansion or contraction. It is good to remember this heating condition when logging station- that is, do not attempt to log or tune in a station previously logged on a "Cold" chassis as the station being tuned in would "drift" and the calibration on the previously logged station would be incorrect.

(A) Connect signal lead of test oscillator to grid of 6J7 (1st Detector tube) through .05 mfd., condenser. Connect the ground lead to the chassis.

(B) See that both loud speaker plugs are firmly in their sockets. Turn Power Switch to "ST."

(No. 5) position.

(C) Set dial pointer to 1500 K. C. and range switch on Broadcast position.

(D) Place test Oscillator in operation at 456 K. C. Turn receiver volume control to maximum and HI-FIDELITY CONTROL to POSITION No. 3 which is maximum selectivity position.

(E) Attenuate test Oscillator output to lowest value, consistent with obtaining a readable indication on output meter.

(F) Adjust six I. F. Trimmers, A1, A2, A3, A4, A5, A6, located on the I. F. Transformers on top of Chassis until maximum output is obtained. During alignment, maintain as low a value of signal as will allow obtaining of accurate adjustment.

4. Discriminator Alignment

(A) With the Test Oscillator connected as above connect to the 50-0-50 (50-0-50 Micro-Amp.) Galvanometer to the two Cathodes of the 6H6 Discriminator Tube. (one side of the meter may go to the chassis ground and the other side to the Cathode marked K2 on the schematic drawing.)

(B) Turn Power switch to Dial (No. 2) position.

(C) Attenuate Test Oscillator to maximum output being sure that the frequency remains at exactly 455 K. C.

(D) With an insulated screw driver (No Metal) back off trimmer screw of Discriminator Secondary (A7) until trimmer is wide open.

(E) Adjust trimmer (A8)-Discriminator primary to maximum swing of Galvanometer (either positive or negative).

(F) Re-align secondary trimmer (A7) to position of no current (0). Be sure that test oscillator has not been changed and that signal is 455 K. C. Do not readjust Primary trimmer (A8) unless the entire operation as outlined above is repeated.

(G) Vary the I. F. frequency (Test Oscillator) and make sure that discriminator current falls to "0" at exact I. F. resonance. Also check to determine the maximum current either side of resonance, that is, one side of resonance will read maximum positive current and the other will read maximum negative current. Both sides of resonance should read about the same.

Note - The Primary and secondary of the Discriminator Transformer may be in the reverse to that shown on the drawing - check this polarity by touching the trimmer screws with a metal screw driver. When the metal comes in contact with the

©John F. Rider, Publisher

MODEL 1541
Chassis 15W
Alignment,Part 2

GENERAL HOUSEHOLD UTILITIES CO.

screw on the secondary trimmer the Galvanometer pointer will fluctuate. (use only a non-metallic screw driver for alignment.)

5. 1500 K. C. Alignment:

(A) Connect signal lead of test Oscillator through 200 Mmf. Condenser to antenna binding post of chassis, and ground lead to chassis ground.
(B) Place test oscillator in operation at 1500 K. C.
(C) Turn dial pointer to 1500 K. C.
(D) Turn range switch to Broadcast position.
(E) Turn Hi-Fidelity Control to No. 3 position.
(F) Adjust Broadcast oscillator trimmer (A19) to maximum output.
(G) Adjust Detector Trimmer (A10) to maximum output.
(H) Adjust antenna Trimmer (A11) to maximum output.

6. 600 K. C. Alignment:

(A) Place test oscillator in operation at 600 K. C.
(B) Tune in signal to maximum (this point does not have to be exactly at 600 K. C. dial setting).
(C) Adjust the 600 K. C. Padding Condenser (A12) which is on rear of Chassis, in direction of signal increases. At same time rock the tuning condenser back and forth through resonance while adjusting padding condenser until maximum output is obtained.

7. Recheck 1500 K. C. Alignment - see 5 - Above

8. 5000 K. C. Alignment:

(A) Set Range Switch to Police - Amateur position.
(B) Place test Oscillator in operation at 5000 K. C.
(C) Turn Dial Pointer to 5000 K. C.
(D) Adjust Set Oscillator Trimmer (A13) to maximum output.
(E) Adjust Detector Trimmer (A14) to maximum output.
(F) Adjust Antenna Trimmer (A15) to maximum output.

8. 18 M. C. Alignment:

(A) Connect signal lead of test oscillator through 400 Ohm Resistor to Antenna binding post of Chassis.
(B) Connect the ground lead to ground terminal of Chassis.
(C) Set Range Switch to "Foreign Broadcast" position and turn dial pointer to 18 M. C.
(D) Place test Oscillator in operation at 18 M. C.
(E) Adjust set oscillator Trimmer (A16) to maximum output.
(F) Adjust Detector Trimmer (A17) to maximum output.
(G) Adjust Antenna Trimmer (A18) to maximum output.
(H) On the 18 M. C. Oscillator Alignment will be noted that there are two settings at which the signal will be received. Use the lower of the images for alignment point that is, the setting giving most capacity or the point at which the trimmer screw is farthest in.

10. Ultra Short Wave Alignment:

(A) With the Test Oscillator connected as above apply a 30 megocycle signal to the receiver. If Test Oscillator will not reach 30 megocycles use harmonic of 15 megocycles.
(B) Turn dial pointer to 30 M. C.
(C) Turn Range switch to Ultra short Wave position.
(D) The U. S. W. oscillator coil is adjusted by moving the length of the coil winding, sticking thru the lug on the range switch. (See Note Fig. 2, Deck IV OSC.)
(E) The U. S. W. Detector coil is adjusted by moving the turns of wire in and out on the coil form and at the same time rocking the tuning condenser back and forth until maximum output is obtained. The Ultra Short Wave Band should never be adjusted unless tubes are changed or other constants in the circuit have been changed.

11. Alignment of "I.F. Rejector Filter" Circuit:

Due to interference caused by commercial code stations operating on wave lengths near the frequency at which the I. F. amplifiers of this receiver are aligned an I. F. filter has been incorporated in the antenna circuit to act as a rejector system thereby lessening the possibility of this form of interference entering the receiver. The filter should be turned to the same frequency as the I. F. Transformers, and this operation should be performed after the set has been completely aligned.

(A) Connect signal lead of test oscillator to antenna binding post thru a 200 mmf. condenser.
(B) Connect ground lead to ground terminal of chassis.
(C) Set dial pointer to 1500 K. C. and range switch on "Broadcast" position.
(D) Place test oscillator in operation at 455 K. C. - turn receiver volume control to maximum and Hi-Fidelity control to No. 3 position.
(E) Attenuate test oscillator output so that a fairly strong signal is applied, and tune filter condenser (A19) so that the output meter indicates a minimum reading.

12. Tuning Acoustic Filter:

The I. F. system of a Hi-Fidelity receiver is expanded or broadened so that audio frequencies of the higher musical range will be passed through the selective circuits. It is desirous to pass audio frequencies only up to a value of 10,000 cycles, so that the entire musical range may be reproduced at the same time frequencies above this value must be cut off - so that that station noises and atmospheric disturbances are not admitted to the speaker system.

An accoustic filter is incorporated in this chassis, that may be tuned so that frequencies above 10,000 cycles are excluded. This filter is tuned as follows:

(A) After all other adjustments are completed apply a 10,000 cycle note, produced by an audio oscillator or phonograph frequency record, connecting one of the signal leads to the grid of the 6R7 (1st. A.F. tube) and the ground lead to the chassis.
(B) Set Hi-Fidelity control to maximum (No. 5) position.
(C) Attenuate audio signal so as to obtain a good reading on the output meter.
(D) Tune accoustic filter condenser (A20) until a MINIMUM-output is indicated on the output meter.

The Range Switch

The Range Switch is a simple four deck multiple pole, positive acting switch, used to connect the various coils into their proper circuits, and is designed in such a way that the coils being used are isolated from coils of the two succeeding bands of a lower frequency. In the case of the detector circuit both the higher and lower frequency bands, above and below the circuit selected, are shorted out. This switching arrangement not only selects the proper coils for each band, but grounds the unused section, allowing the receiver to work at maximum sensitivity and selectivity on all four ranges. The Range Switch and Coil Assembly is shown schematically in fig. (2) and it will be noted that deck I (Lights) is the one toward the front of the chassis Deck II (Antenna) is the second position, Deck III (Detector) in the center and followed by Deck IV (Oscellator). The diagram shows the exact position of the coil and switch lugs, and little difficulty should be experienced in making any necessary repairs or inspection.

©John F. Rider, Publisher

GILFILLAN BROS., INC.

MODEL 8X
Schematic
Socket

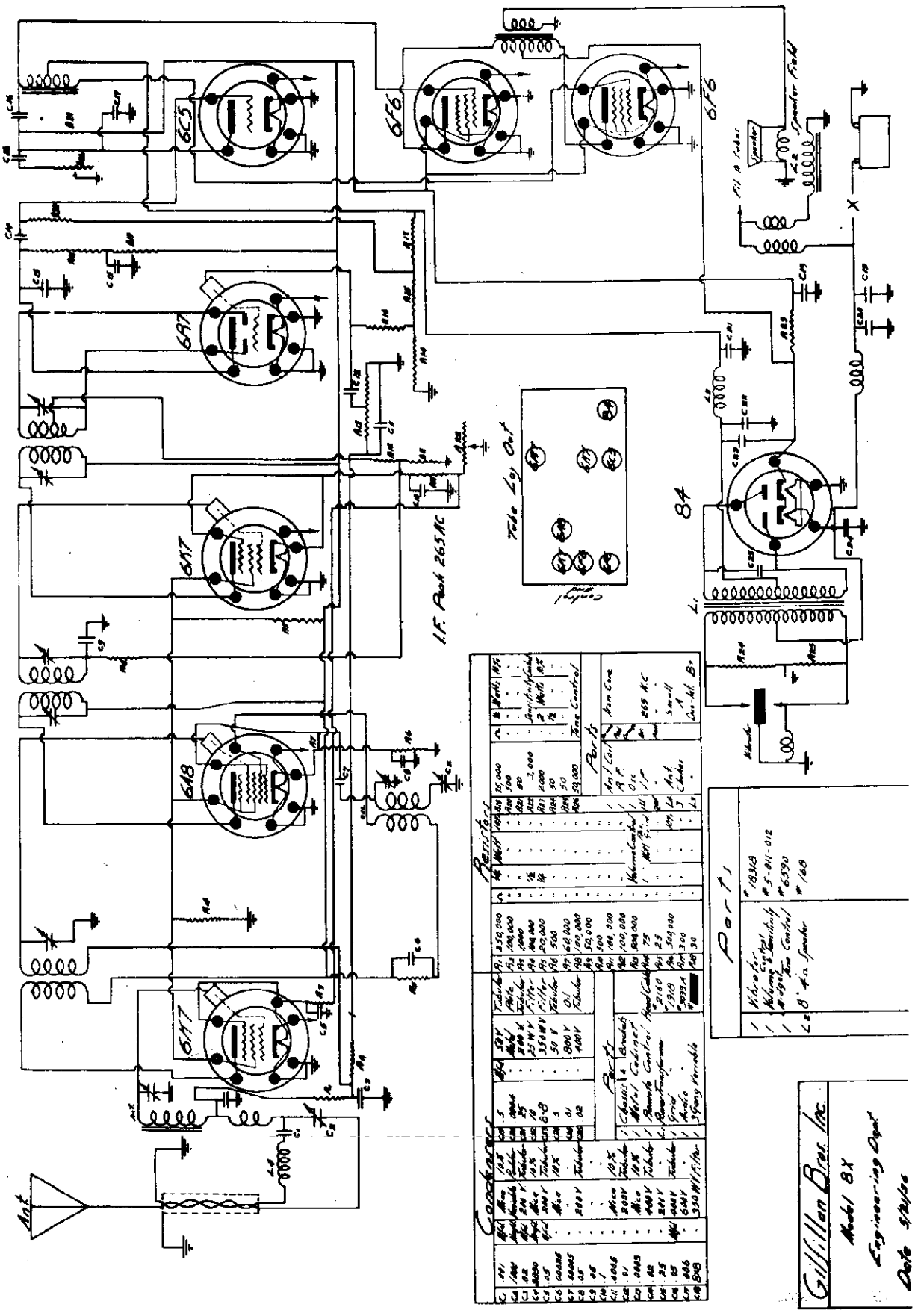

©John F. Rider. Publisher

MODEL 402T

GILFILLAN BROS., INC.

MODEL 412T
MODEL 723T-C
Schematics
Socket

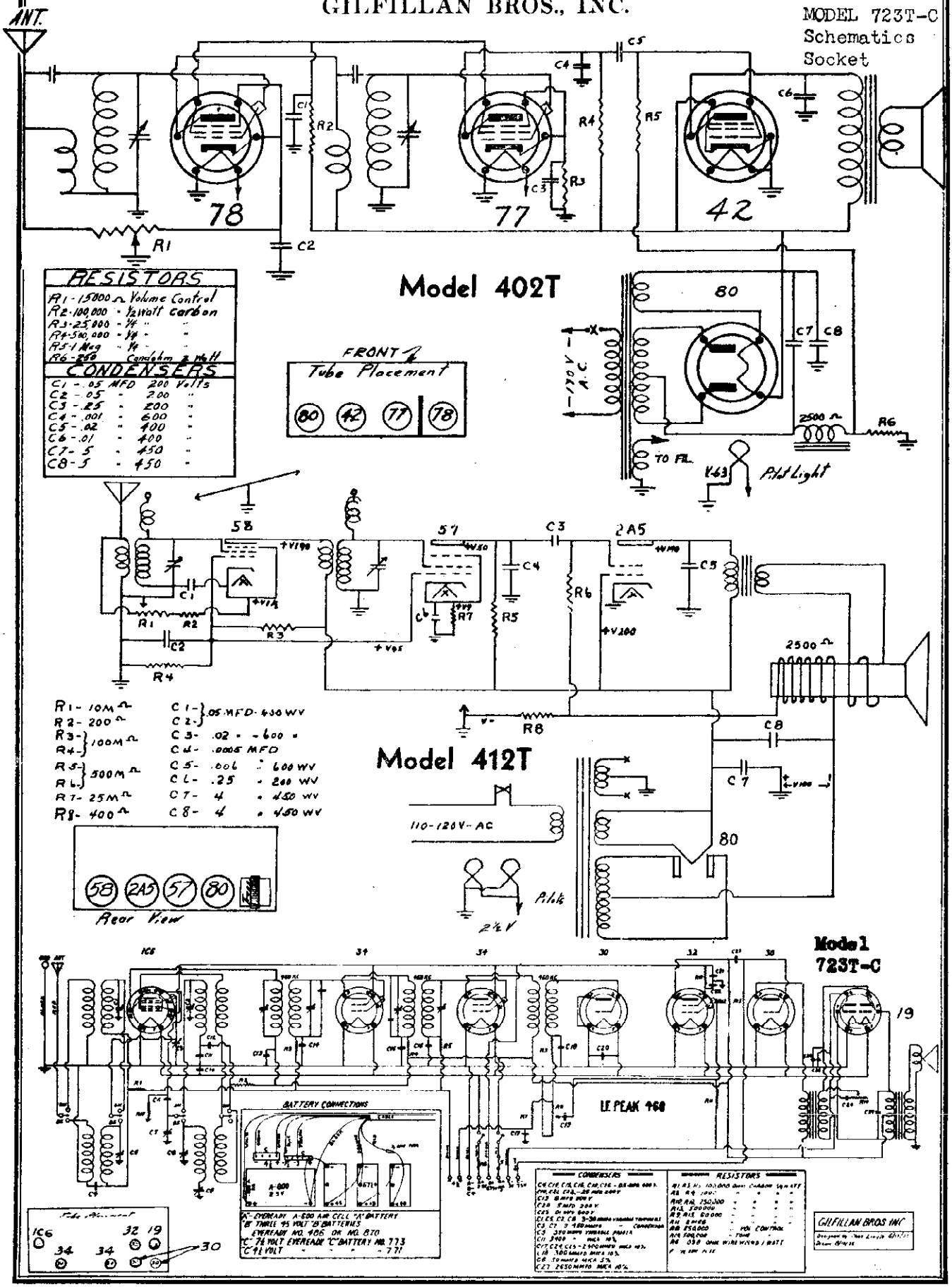

©John F. Rider, Publisher

GILFILLAN BROS., INC.

MODEL 831T-C
Schematic
Socket

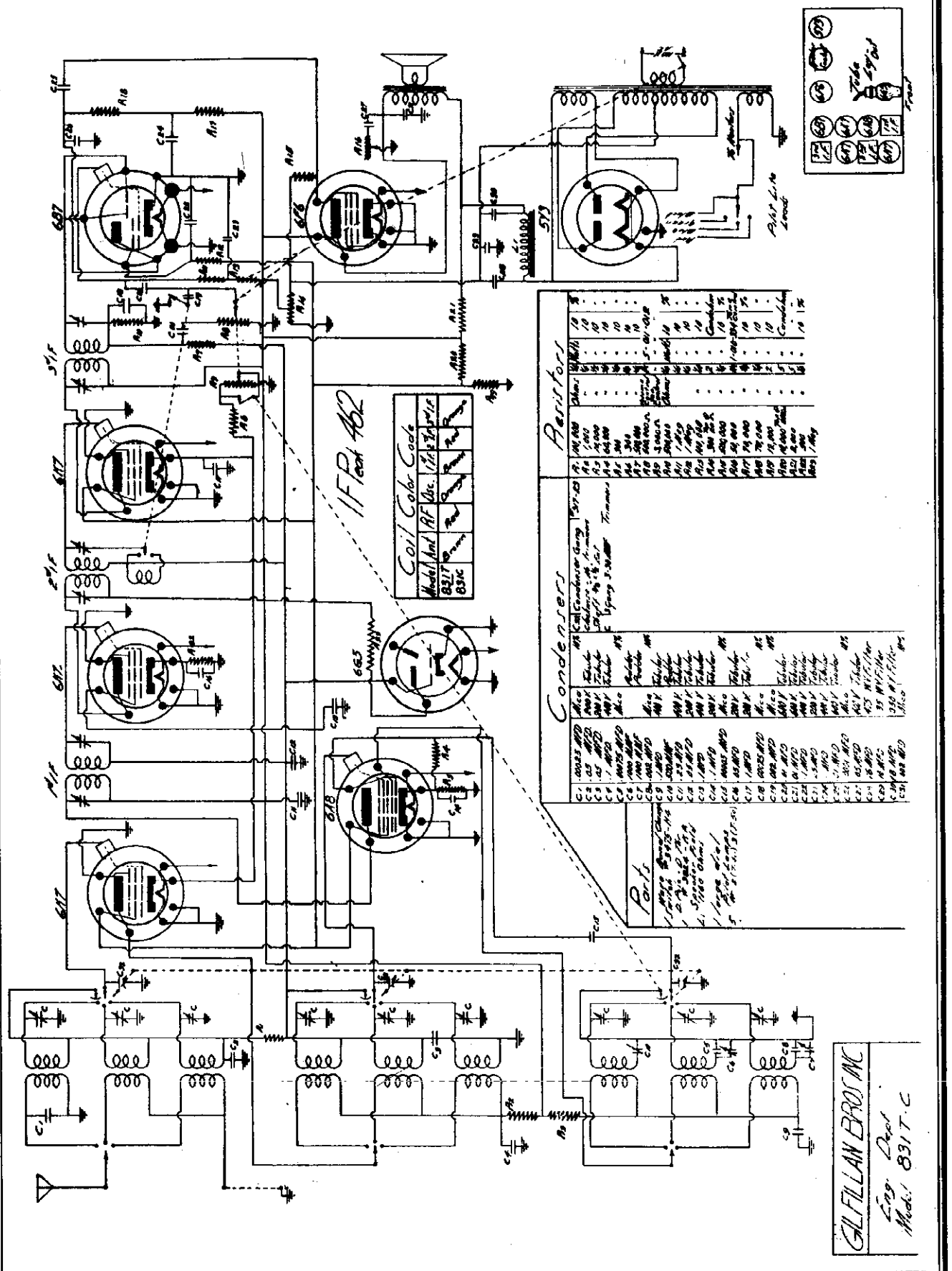

© John F. Rider Publisher

MODEL 1131C
Schematic
Socket

GILFILLAN BROS., INC.

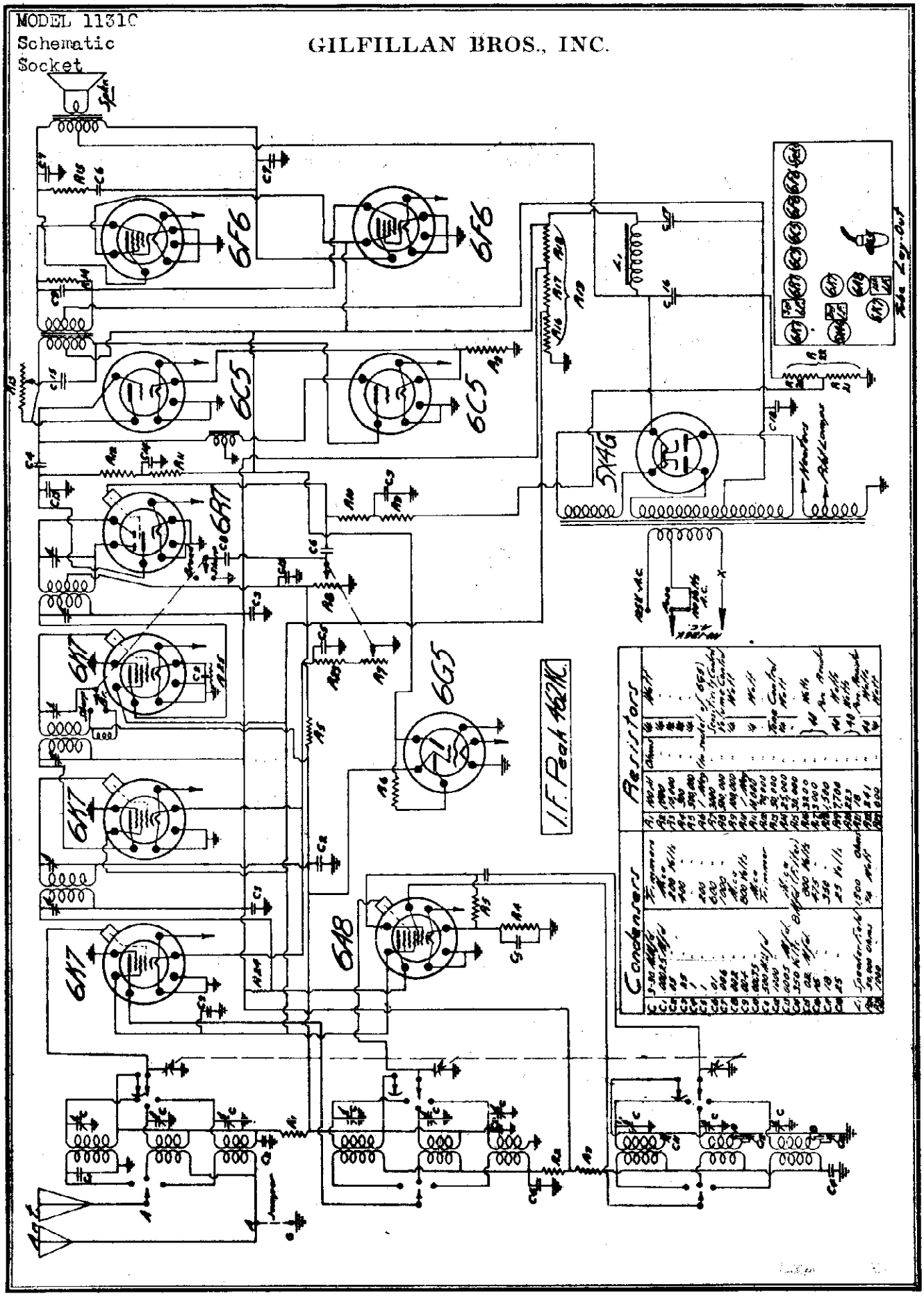

©John F. Rider, Publisher

GOODYEAR SERVICE

MODEL 777
Series A & B
Schematics
Voltage

SERIES A

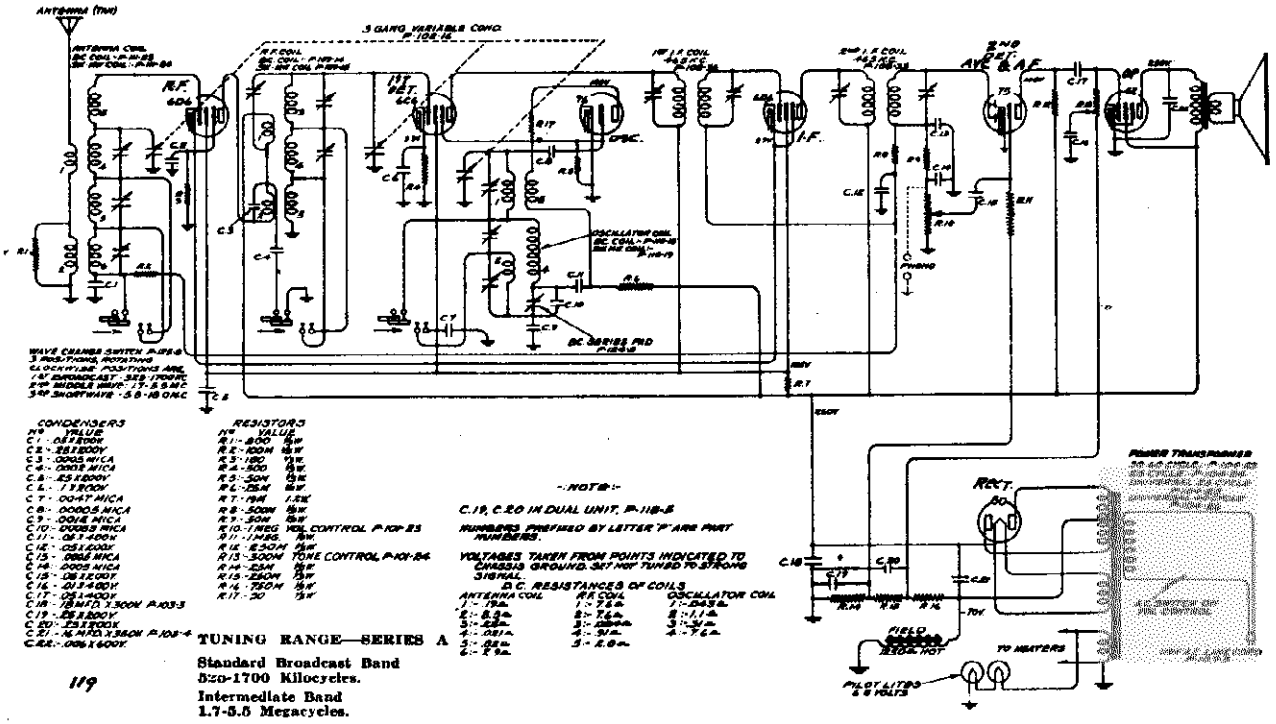

CONDENSERS

No.	VALUE
C.1	.05 1500V
C.2	.05 1500V
C.3	.0005 MICA
C.4	.0003 MICA
C.5	.05 1500V
C.6	.1 1500V
C.7	.0047 MICA
C.8	.00005 MICA
C.9	.0014 MICA
C.10	.00035 MICA
C.11	.05 1400V
C.12	.05 1400V
C.13	.0005 MICA
C.14	.05 1400V
C.15	.05 1400V
C.16	.05 1400V
C.17	.05 1400V
C.18	18 MFD. 1 300V P.103-5
C.19	.05 1500V
C.20	.25 1500V
C.21	.16 MFD. 1 350V P.103-4
C.22	.006 1 600V

RESISTORS

No.	VALUE
R.1	400 1W
R.2	100M 1W
R.3	150 1W
R.4	500 1W
R.5	50M 1W
R.6	25M 1W
R.7	19M 1.5W
R.8	50M 1W
R.9	50M 1W
R.10	1 MEG VOL CONTROL P-101-25
R.11	1 MEG 1W
R.12	250M 1W
R.13	500M TONE CONTROL P-101-24
R.14	25M 1W
R.15	25M 1W
R.16	750M 1W
R.17	20 1W

NOTE:
C.19, C.20 IN DUAL UNIT, P-118-8
NUMBERS PREFIXED BY LETTER "P" ARE PART NUMBERS.
VOLTAGES TAKEN FROM POINTS INDICATED TO CHASSIS GROUND. SET NOT TUNED TO STRONG SIGNAL.

D.C. RESISTANCES OF COILS

ANTENNA COIL	R.F. COIL	OSCILLATOR COIL
1 - 12Ω	1 - 7 Ω	1 - 0.4 Ω
2 - 8.5Ω	2 - 7 Ω	2 - 1.1 Ω
3 - 42Ω	3 - 220Ω	3 - 34 Ω
4 - .08 Ω	4 - 9 Ω	4 - 7 Ω
5 - .02 Ω	5 - 2.0 Ω	
6 - 7 Ω		

TUNING RANGE—SERIES A

Standard Broadcast Band
520-1700 Kilocycles.
Intermediate Band
1.7-5.5 Megacycles.
Short Wave Band
5.5-18.0 Megacycles.

I. F. Frequency — 465 Kilocycles

SERIES B

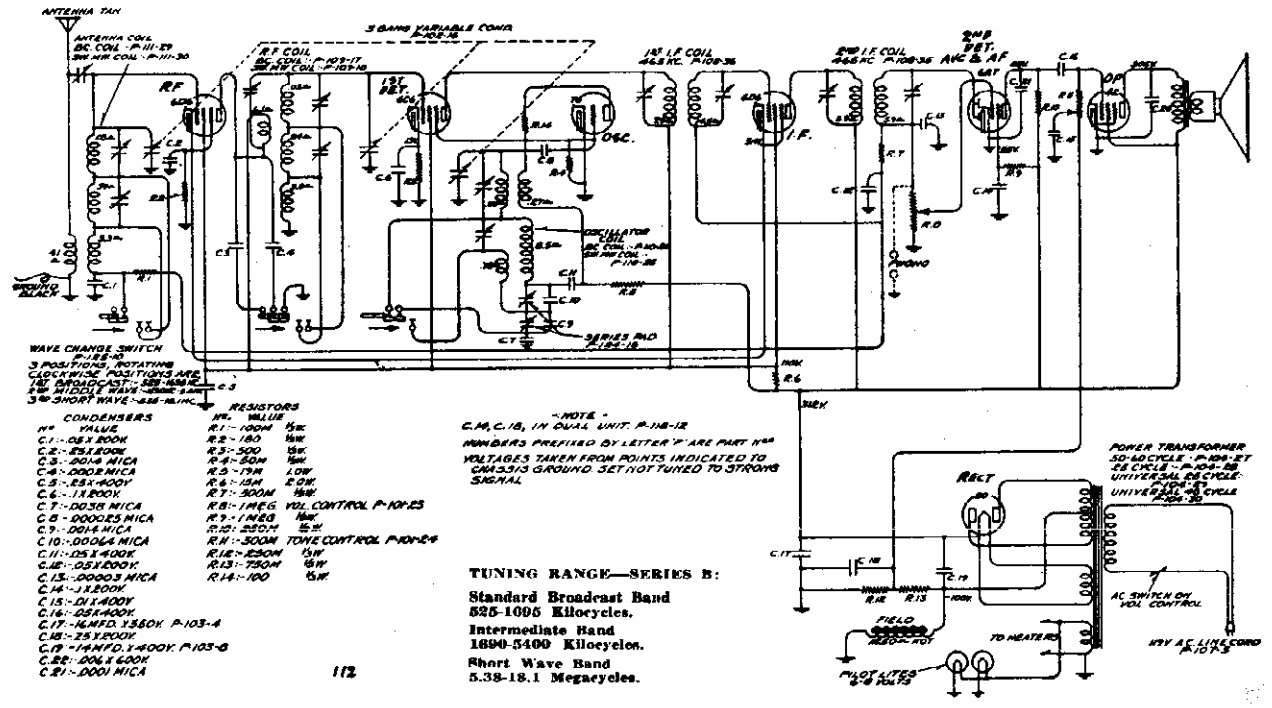

CONDENSERS

No.	VALUE
C.1	.05 1 200V
C.2	.05 1 200V
C.3	.001 MICA
C.4	.0002 MICA
C.5	.25 1 400V
C.6	.1 1 200V
C.7	.0035 MICA
C.8	.00025 MICA
C.9	.0014 MICA
C.10	.0004 MICA
C.11	.05 1 400V
C.12	.05 1 400V
C.13	.00025 MICA
C.14	.1 1 200V
C.15	.01 1 400V
C.16	.05 1 400V
C.17	.16 MFD. 1 350V. P-103-4
C.18	.25 1 200V
C.19	1 MFD. 1 400V. P-103-6
C.20	.006 1 600V
C.21	.001 MICA

RESISTORS

No.	VALUE
R.1	100M 1W
R.2	150 1W
R.3	500 1W
R.4	50M 1W
R.5	19M 1.0W
R.6	10M 2.0W
R.7	500M 1W
R.8	1 MEG VOL CONTROL P-101-25
R.9	1 MEG 1W
R.10	250M 1W
R.11	500M TONE CONTROL P-101-24
R.12	25M 1W
R.13	750M 1W
R.14	100 1W

NOTE
C.19, C.18, IN DUAL UNIT, P-118-12
NUMBERS PREFIXED BY LETTER "P" ARE PART NOS.
VOLTAGES TAKEN FROM POINTS INDICATED TO CHASSIS GROUND. SET NOT TUNED TO STRONG SIGNAL

TUNING RANGE—SERIES B:

Standard Broadcast Band
525-1095 Kilocycles.
Intermediate Band
1690-5400 Kilocycles.
Short Wave Band
5.38-18.1 Megacycles.

©John F. Rider, Publisher

MODEL 777
Series A & B
Trimmers, Socket
Parts, Layouts

GOODYEAR SERVICE

TOP VIEW - SERIES A

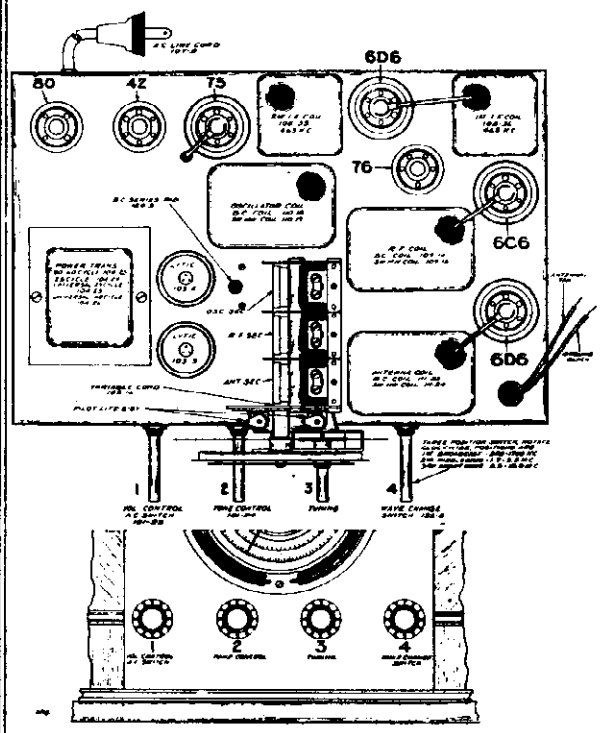

TOP VIEW - SERIES B

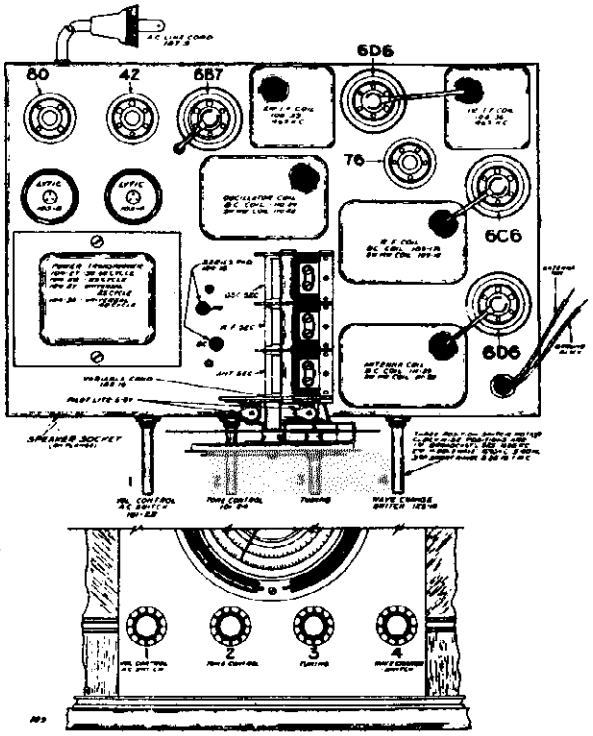

REPAIR PARTS LIST - MODEL 777
SERIES "A" & "B"

Parts Used In Ser. A Only	Parts Used In Ser. B Only	DESCRIPTION	List Price Each
		CONDENSERS	
		Unless Otherwise Listed—All Molded Mica	$0.25
		Unless Otherwise Listed—All Single Section Tubular Paper By-Pass	.25
		Unless Otherwise Listed—All Dual Section Tubular Paper By-Pass	.50
103-3	Not Used.	18 Mfd. x 300 V. Electrolytic	1.35
103-4	103-4	16 Mfd. x 350 V. Electrolytic	1.35
Not Used.	103-8	14 Mfd. x 400 V. Electrolytic	1.35
120-20	Not Used.	.0047 Mica—Type MH + or — 5%	.50
Not Used.	120-29	.0038 Mica—Type MW + or — 2½%	.50
		RESISTORS	
		Unless Otherwise Listed—All Resistors	.20
Not Used.	130-61	15M Ohm—2 Watt + or — 20%—180 V.	.40
		COILS	
108-35	108-35	Output I.F. Coil Assembly Complete—Less Can	1.50
108-36	108-36	Input I.F. Coil Assembly Complete—Less Can	1.50
109-14	Not Used.	Broadcast R.F. Coil Assembly Complete—Less Can	1.00
109-15	Not Used.	Mid-Wave & Short Wave R.F. Coil Assembly Complete—Less Can	1.50
Not Used.	109-17	Broadcast R.F. Coil Assembly Complete—Less Can	.70
Not Used.	109-18	Mid-Wave & Short Wave R.F. Coil Assembly Complete—Less Can	1.50
110-18	Not Used.	Broadcast Oscillator Coil Assembly Complete—Less Can	.50
110-19	Not Used.	Mid-Wave & Short Wave Oscillator Coil Assembly Complete—Less Can	1.25
Not Used.	110-24	Broadcast Oscillator Coil Assembly Com.—Less Can	.75
Not Used.	110-25	Mid-Wave & Short Wave Oscillator Coil Assembly Complete—Less Can	1.50
111-23	Not Used.	Broadcast Antenna Coil Assembly Com.—Less Can	1.00
111-24	Not Used.	Mid-Wave & Short Wave Antenna Coil Assembly Complete—Less Can	1.50
Not Used.	111-29	Broadcast Antenna Coil Assembly Com.—Less Can	1.00
Not Used.	111-30	Mid-Wave & Short Wave Antenna Coil Assembly Complete—Less Can	1.50
		TRANSFORMERS	
104-23	Not Used.	50/60 Cycle Power Transformer	3.50
104-24	Not Used.	25 Cycle Power Transformer	5.00
104-25	Not Used.	Universal—25 Cycle Primary	7.50
104-26	Not Used.	Universal—40 Cycle Primary	6.00
Not Used.	104-27	50/60 Cycle Power Transformer	4.50
Not Used.	104-28	25 Cycle Power Transformer	7.00
Not Used.	104-29	Universal—25 Cycle Primary	7.50
Not Used.	104-30	Universal—40 Cycle Primary	7.00
		SPEAKERS	
114-13	114-13	Six Inch Speaker	6.00
114-17	114-17	Eight Inch Speaker	6.50
114-18	114-18	Ten Inch Speaker	8.00

		MISCELLANEOUS	
101-23	101-23	Volume Control and Switch	
101-24	101-24	Tone Control	
102-16	102-16	Three Gang Variable Condenser	
107-5	107-5	Line Cord and Plug	

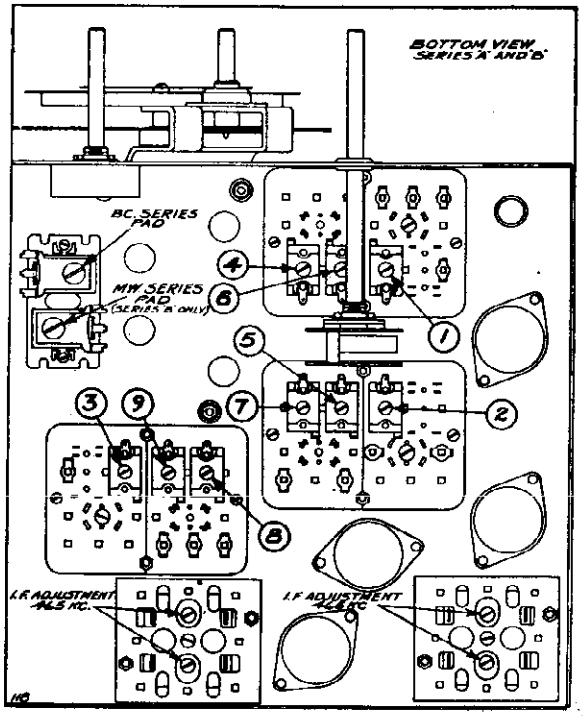

MODEL 777
Series A &
Alignment

GOODYEAR SERVICE

NOTE: IN SERIES B THE TYPE 75 WAS REPLACED BY TYPE 6B7, DUPLEX DIODE PENTODE AS A SECOND DETECTOR, A.V.C. AND AUDIO.

Series A and B chassis are serially numbered on the back flange of the chassis, series A beginning with number "5B104021A" and up, series B chassis beginning with number "5D114175B" and up. Series A and B may be identified by the letter "A" and "B" at the end of the serial numbers.

Transformers are available and chassis are sometimes equipped with universal transformers for operation on 40 and 60 cycles and with primary taps for 108, 125, 150, 220 and 250 volts (see instructions) and also sometimes equipped with 25 cycle transformers with 105-115 volt or 220 volt primaries, not universals.

SERVICE NOTES

Voltages taken from different points of circuit to chassis are measured with volume control full on, all tubes in their sockets and speaker connected, with a volt meter having a resistance of 1000 ohms per volt. These voltages are clearly indicated on the circuit diagrams of series A and B.

IN ORDER TO PREVENT SIGNAL FROM ACTING UPON AVC AND AFFECTING ACCURACY OF VOLTAGE MEASUREMENTS, AERIAL AND GROUND LEADS SHOULD BE SHORT CIRCUITED WHILE MAKING MEASUREMENTS.

All voltages are to be measured with 119 volts on the primary of the power transformer.

ALIGNING INSTRUCTIONS

Dummy Antennas

The following dummy antennas are used in aligning both series A and B and are referred to in the following alignment instructions as "Dummy 1", "Dummy 2", and "Dummy 3"

Dummy 1: (I.F.)—Consists of a .1 mfd. condenser connected in series with the external oscillator.

Dummy 2: (Broadcast)—Consists of a 200 mmfd. condenser and a 20 ohm resistor connected in series with each other and in series with the external oscillator.

Dummy 3: (Intermediate and Short Wave)—Consists of a .1 mfd. condenser and a 400 ohm resistor connected in series with each other and in series with the external oscillator.

Resonance Indicator:

Use as a resonance indicator an output meter connected across the primary of the speaker input transformer, or by means of an adapter between the plate and screen terminals of the type 42 output tube. Maximum deflection of the meter indicates resonance. Use only enough signal to get a readily readable output. A low range output meter or the low scale of a multi-range meter should be used.

ALIGNMENT PROCEDURE SERIES A ONLY

The following adjustments to be made after the I.F.'s have been aligned as explained above.

BROADCAST BAND ALIGNMENT:

1. With wave changing switch in the broadcast position, extreme left of its rotation, and with external oscillator set at 550 kilocycles and connected in series with "Dummy 2" to the tan antenna and black ground lead, make the following adjustments:
   (a) Adjust broadcast series pad to resonance with oscillator. Keep set in tune with oscillator by slowly rocking to and fro the variable condenser until maximum output is obtained. Note: This adjustment is accessible from the top of the chassis and is located between the variable condenser and the electrolytic condenser. See top view.
   (b) Re-set external oscillator to 1500 K.C., move dial pointer to 1500 K.C. and adjust oscillator (adjustment number 3), R.F. (adjustment number 2) and antenna (adjustment number 1) to resonance. See bottom view for location of these adjustments.
   (c) Repeat adjustments "a" and "b" until sensitivity is at its maximum.

NOTE: IT IS EXTREMELY NECESSARY IN MAKING ALL OF THESE ADJUSTMENTS THAT THE FUNDAMENTAL OSCILLATOR SIGNAL BE TUNED IN AND NOT THE IMAGE FREQUENCY WHICH WILL FALL BELOW THE FUNDAMENTAL.

SHORT WAVE BAND ALIGNMENT:

1. With wave changing switch in the short wave position, extreme right of its rotation, and with external oscillator set at 17 megacycles and connected in series with "Dummy 3" to the tan antenna and black ground lead, make the following adjustments:
   (a) Move dial pointer to 17 megacycles and adjust short wave oscillator (adjustment number 8), short wave R.F. (adjustment number 7) and short wave antenna (adjustment number 6) to resonance.
   (b) Re-set external oscillator to 6 megacycles and pick up signal by rotating variable condenser and check for sensitivity.

INTERMEDIATE BAND ALIGNMENT:

1. With wave changing switch in the intermediate position center of its rotation, and with external oscillator set at 5 megacycles and connected in series with "Dummy 3" to the tan antenna and black ground lead, make the following adjustments:
   (a) Move dial pointer to 5 megacycles and adjust intermediate wave oscillator (adjustment number 9), intermediate wave R.F. (adjustment number 5) and intermediate antenna (adjustment number 4) to resonance.
   (b) Re-set external oscillator to 1500 K.C. and pick up signal by rotating variable condenser and check for sensitivity.
   (c) Re-check broadcast sensitivity as outlined under "Broadcast Band Alignment".

Series "A" chassis have no intermediate band series oscillator pad adjustment.

ALIGNMENT PROCEDURE SERIES B ONLY

The following adjustments to be made after the I.F.'s have been aligned as explained above.

BROADCAST BAND ALIGNMENT:

1. With wave changing switch in the broadcast position, extreme left of its rotation, and with external oscillator set at 600 kilocycles and connected in series with "Dummy 2" to the tan antenna and black ground lead, make the following adjustments:
   (a) Adjust broadcast series pad to resonance with oscillator. Keep set in tune with oscillator by slowly rocking to and fro the variable condenser until maximum output is obtained. Note: This adjustment is accessible from the top of the chassis and is located between the variable condenser and the electrolytic condenser. See top view.
   (b) Re-set external oscillator to 1400 K.C., move dial pointer to 1400 K.C. and adjust oscillator (adjustment number 3), R.F. (adjustment number 2) and antenna (adjustment number 1) to resonance. See bottom view for location of these adjustments.
   (c) Repeat adjustments "a" and "b" until sensitivity is at its maximum.

NOTE: IT IS EXTREMELY NECESSARY IN MAKING ALL OF THESE ADJUSTMENTS THAT THE FUNDAMENTAL OSCILLATOR SIGNAL BE TUNED IN AND NOT THE IMAGE FREQUENCY WHICH WILL FALL BELOW THE FUNDAMENTAL.

SHORT WAVE BAND ALIGNMENT:

1. With wave changing switch in the short wave position, extreme right of its rotation, and with external oscillator set at 17 megacycles and connected in series with "Dummy 3" to the tan antenna and black ground lead, make the following adjustments:
   (a) Move dial pointer to 17 megacycles and adjust short wave oscillator (adjustment number 8), short wave R.F. (adjustment number 7) and short wave antenna (adjustment number 6) to resonance.
   (b) Re-set external oscillator to 6 megacycles and pick up signal by rotating variable condenser and check for sensitivity.

INTERMEDIATE BAND ALIGNMENT:

1. With wave changing switch in the intermediate wave position, center of its rotation, and with external oscillator set at 1500 K.C. and connected in series with "Dummy 3" to the tan antenna and black ground lead, make the following adjustments:
   (a) Rotate variable condenser to approximately 1500 K.C., tune in oscillator signal and adjust M.W. series pad (see top view) to resonance. Slowly rock condenser to and fro while making this adjustment to be sure maximum output is obtained.
   (b) Set external oscillator at 5 M.C., rotate condenser, pick up signal and adjust intermediate wave R.F. (adjustment number 5), intermediate wave antenna (adjustment number 4) and intermediate wave oscillator (adjustment number 9) to resonance.
   (c) Re-check broadcast alignment and if it is found necessary to re-adjust either R.F. or antenna trimmers, repeat the 17 M.C. short wave and 5 M.C. intermediate wave adjustments.

ALIGNING I.F. TRANSFORMERS (465 K.C.)

Series A and B.

Series A—Part No. 108-35 Output I.F. Transformer
Series A—Part No. 108-36 Input I.F. Transformer
Series B—Part No. 108-35 Output I.F. Transformer
Series B—Part No. 108-36 Input I.F. Transformer

These I.F. transformers have two adjustments, both of which are accessible from the underside of chassis (see bottom view).

1. With volume control full on, the extreme right of its rotation, and with wave changing switch in the broadcast position, extreme left of its rotation, and with variable condenser set to approximately 1400 kilocycles, make the following adjustments:
   (a) Connect external oscillator set at 465 kilocycles, in series with "Dummy 1", to the control grid cap of the type 6D6 tube, located between the two I.F. transformers, and adjust the output I.F. transformer to resonance.
   (b) With "Dummy 1" still connected, move oscillator output clip from grid of 6D6 to grid cap to 6C6 and adjust input I.F. transformer to resonance.
   (c) With oscillator still connected to 6C6, re-adjust output I.F. transformer.

©John F. Rider, Publisher

MODEL 580
Schematic
Parts List.

GOODYEAR SERVICE

Model 580

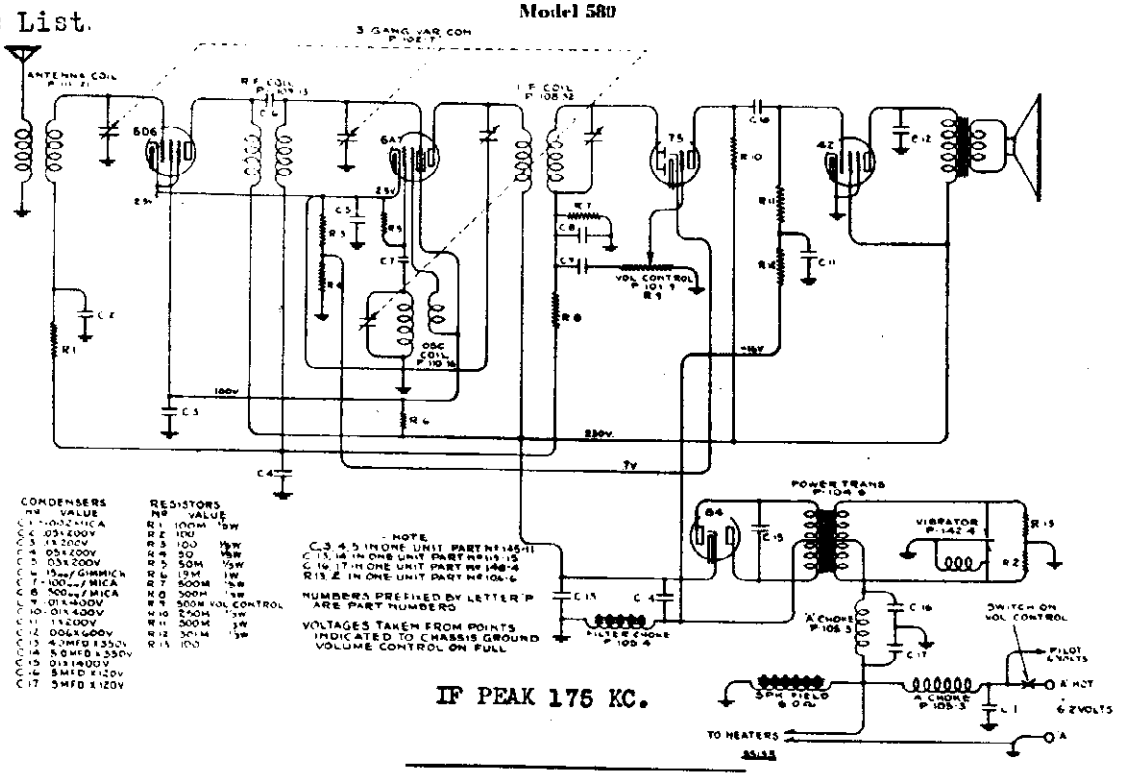

IF PEAK 175 KC.

REPAIR PARTS—MODEL 580

Serial No. 11501 and up

When ordering parts, always specify part and model number as well as serial number of chassis.

Part No.	Description	List Price Each
101-9	Volume Control with Switch	$1.35
102-7	Three Gang Geared Variable Condenser	4.00
104-6	Vibrator Transformer	3.00
105-3	"A" Choke—40T—No. 16E—½" Dia.	.10
105-4	380 Ohm Filter Choke	.85
106-6	200 Ohm Center Tapped Resistor	.25
108-32	Output I. F. Transformer Complete, less can and resistor and Condenser Assembly (175 K. C.)	1.75
109-13	R. F. Coil	1.00
110-16	Osc. Coil & bracket	.75
111-21	Antenna Coil	1.00
115-18	Special partition shield	.20
116-5	6-8 Volt T-50 pilot lamp, screw base	.10
116-11	6-8 volt T-51 frosted glass bayonet base lamp	.13
116-6	Pilot light assembly, complete, less bulb	.40
119-15	5-4 Mfd. 300 Volt Electrolytic Filter Condenser	2.50
135-5	⅜x3" carriage bolt	.05
140-4	Container complete with top and bottom	2.50
142-4	Plug-In Vibrator	4.50
145-11	By-Pass Block	.75
146-1	Special bracket including battery, antenna, pilot light cable fittings, but less antenna coil volume control	.40
146-2	Bushing and bracket complete	.20
147-1	Selector Control Coupling	.10
147-11	Volume control coupling	.10
148-1	.5 Mfd. Generator Condenser	.50
148-3	.5 Mfd. Ammeter Condenser	.40
148-4	Dual .5 Mfd. x 120 Volt Condenser	.75
148-6	Special Ford ignition condenser	.60
152-1	Antenna cable	.40
152-2	Battery cable	.35
152-3	Fuse Insulating Sleeve	.05
167-1	Dynamic Speaker	5.00
168-1	Spark-plug type suppressor Universal)	.30
168-2	Distributor plug-type suppressor	.40
168-3	Cable type suppressor	.40
169-1	15 Ampere Fuse (3AG-15)	.05
	Unless otherwise listed, all Carbon Resistors	.20
	Unless otherwise listed, all Single Section Tubular Paper By-Pass Condensers	.25
	Unless otherwise listed, all Dual Section Tubular Paper By-Pass Condensers	.50
	Unless otherwise listed, all Molded Mica Condensers	.25
	All Sockets	10
	Plate antenna	3.50

REMOTE CONTROL PARTS

Part No.	Description	List Price Ea
112-39	Selector Control Shaft	.20
112-41	Idler Gear	.15
112-42	Pointer Shaft	.05
112-43	Volume Control Shaft, Key type less knob	.10
112-85	Volume control shaft less knob	.05
112-44	Pointer (Specify White or Black)	.05
112-45	Bezel (Crystal Retainer)	.15
112-46	Celluloid Dial Crystal	.15
112-48	Pointer Shaft Gear	.05
112-89	Dial	.25
131-5	Black bakelite remote control knobs	.15
146-8	Die Cast Remote Control Mounting Bracket	.30
146-12	Steering Column Strap	.15
146-25	Dash Mounting Bracket	.15
147-3	Selector Control Bushing for 112-39 shaft	.10
147-4	Volume Control Bushing for 112-43-112-85 shaft	.10
149-18	Flexible Volume Control Cable—18"	1.25
149-24	Flexible Volume Control Cable—24"	1.50
150-18	Flexible Selector Cable—18"	1.25
150-24	Flexible Selector Cable—24"	1.50
151-7	Remote Control Head, less flexible shafts, with pilot assemblies and with knobs and mounting hardware	4.90

PILOT LIGHT:

Pilot light assembly, part number 116-9, plugs into the set and to the rear of the remote control unit (see illustrations).

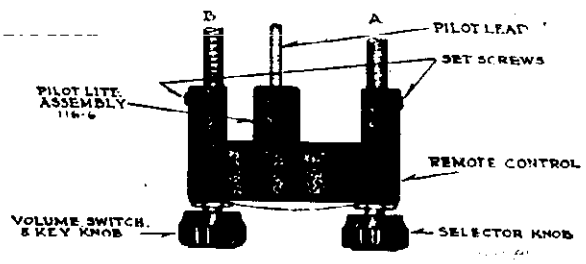

©John F. Rider Publisher

HALLICRAFTERS, INC.

MODEL Super Skyrider
Schematic

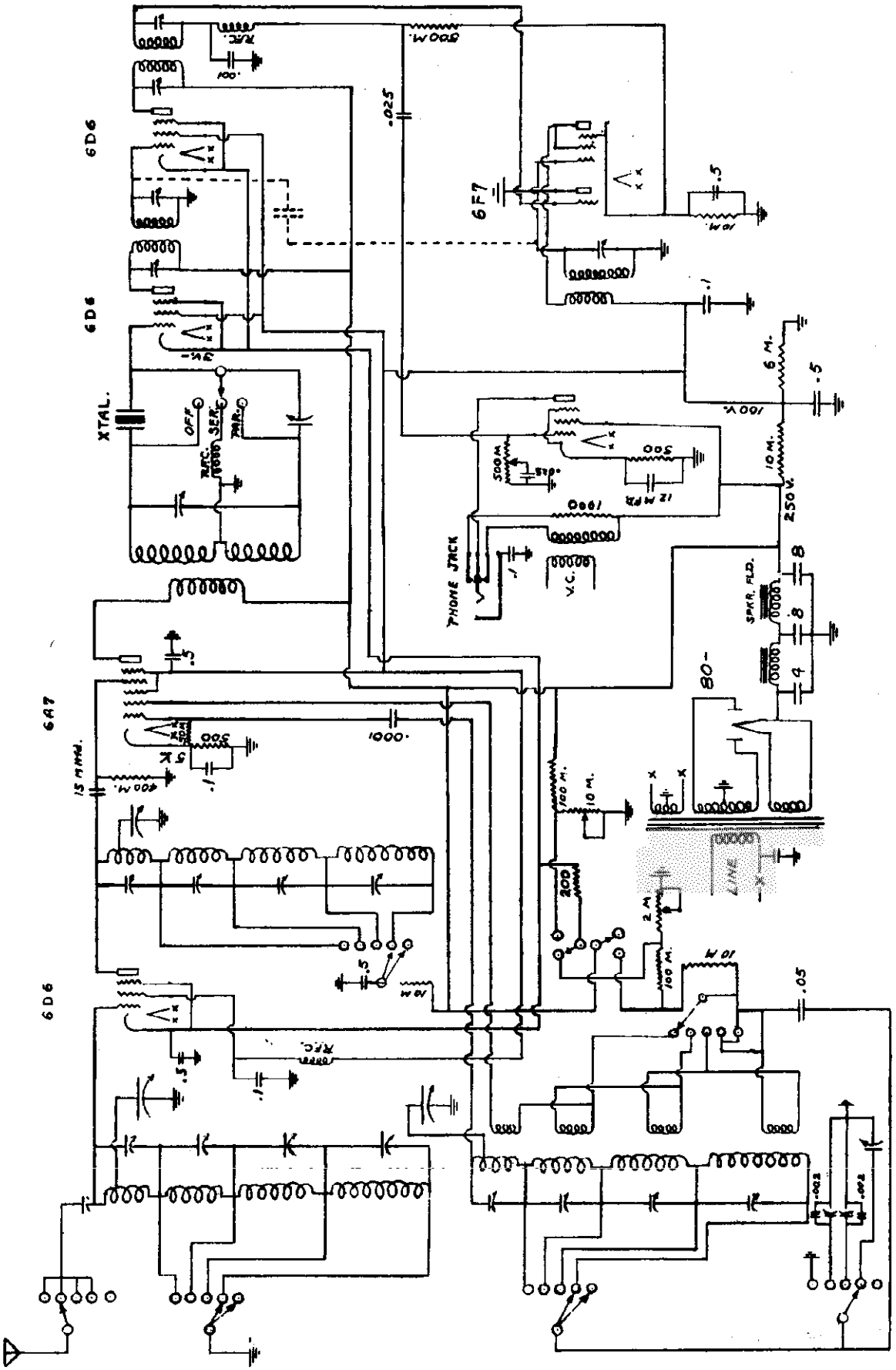

©John F. Rider, Publisher

ALIGNMENT OF THE SUPER SKYRIDER

Alignment instructions on the Super SKYRIDER are as follows:-

Peak the intermediate frequency transformer at 465 k.c. If a crystal filter is to be used with the receiver, that will have to be aligned with the crystal used to insure maximum results from the filter unit, for although our crystals are held to a very close tolerance, 2 k.c. variation will make considerable difference in the efficiency of the receiver. THEREFORE, THE INTERMEDIATES MUST BE ALIGNED WITH THE CRYSTAL TO BE USED.

This will necessitate a crystal oscillator on the indicating device in the diode circuit of the second detector, preferably a 200 micro ampre meter, so the input I.F. signal can be held as low as possible, to insure the I.F.'s being peaked exactly at resonance. If a 200 micro ampre is not available, a 0 to 1 mil meter can be used with a somewhat higher input signal.

After the I.F.'s have been aligned and rechecked, connect the antenna and ground to the output of the good test oscillator. Set the oscillator for 18 megacycles, then turn the wave band switch to the No. 1 position. Align the oscillator and RF circuit to this point to maximum output. Reset test oscillator and tuning condenser to 12 megacycles and if the receiver does not peak at 12, increase or decrease the length of lead from the low end to the high frequency oscillator coil. This lead is on the last switch head toward the rear of the chassis.

Follow the above instructions for the other three bands, with this exception. Adjust the oscillator pad to the low frequency end of each range to maximum response, rather than to the length of lead. The frequency used in these bands are:

No. 2 range 1100 k.c. to 6000 k.c.
No. 3 range 6000 k.c. to 18,000 k.c.
No. 4 range 2750 k.c. to 1400 k.c.

The alignment procedure will have to follow in this sequence to insure maximum results, that is range No. 1 first, No. 2 second and so forth, since due to the shortening action of the switch, the small trimmer condensers across each coil are cut into the circuit in the rotation.

After the receiver has been aligned for maximum results on all ranges, the next step is to adjust the crystal filter circuit, still using a test oscillator to tune in the signal around 3500 k.c. with the crystal filter switch still in the "off" position.

If the test oscillator is modulated, switch the modulation off or place near the carrier signal being received. Turn on the C.W. beat oscillator switch, which is located on the front panel, just below the main tuning condenser. Adjust the trimmer in the rear of the receiver, mounted on the beat oscillator can to the zero beat. Then signal the beat signal to about a 1000 cycle pitch, by tuning the beat oscillator control to the right.

Now, set the crystal filter switch to the center position, which is the series circuit, that is the one used for maximum selectivity and single signal reception. Retune the receiver, preferably using the band spread control through both peaks. One should be strong and the other somewhat lower in volume. On the weaker side, which should be the one to the left of the dial, adjust the crystal phasing condenser, which is mounted above the switch, until the signal disappears, or if a very strong signal is being used, adjust to minimum. Retuning to the opposite side, you will find this hasn't been effected at all. By now you can only receive the one side of the signal. Then tune to the maximum point, which should be very sharp and probably a little hard to set, until one has become accustomed to tuning to the crystal notch, which can only come with some practice. Then switch to the series to "off" position. If the crystal has been properly aligned there will be no decrease in sensitivity between these two positions. If there is, recheck your alignment procedure, to make certain that all adjustments have been made properly.

CONNECT TO 110 V 60 CYCLE - UNLESS OTHERWISE SPECIFIED

TUBE AND PARTS PLACEMENT

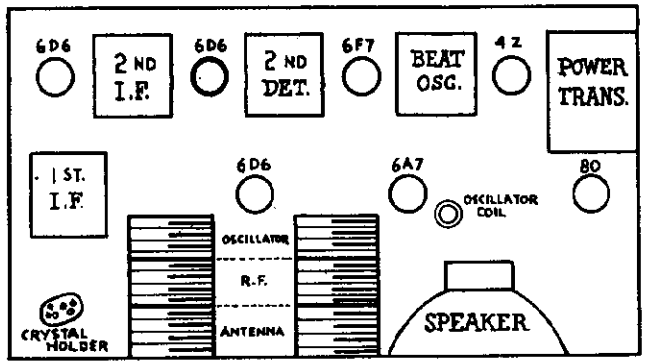

If by any chance there is a difference in sensitivity between the "off" and series position, adjust the beat oscillator, tuning control slightly until you can find one side which seems to be considerably better in volume than any other. This is the ideal place to set this control.

After all these adjustments have been made, the Super SKYRIDER should be completely aligned and ready to put into operation.

THIS RECEIVER IS SOLD WITH OR LESS CRYSTAL. Since all receivers are sold with the Crystal filter circuit complete with the exception of the crystal, it is a comparatively simple process for any one to incorporate a crystal in the receiver anytime he so desires.

Of course if the crystal is added later the intermediate frequency transformers of the receiver must be aligned to the frequency of the crystal used. This is quite important for maximum results on the series crystal position. The intermediate frequency used is 465 K.C. The receiver may be returned to the factory and we will make the proper adjustments at a nominal cost.

Tubes used are:-

6D6 - PRE SELECTOR
6A7 - 1st DETECTOR - O SC
6D6 - IF
6D6 - IF
6F7 - 2nd DETECTOR - BEAT OSC.
42 - OUTPUT
80 - RECTIFIER

MODEL S8A
Schematic

HALLICRAFTERS, INC.

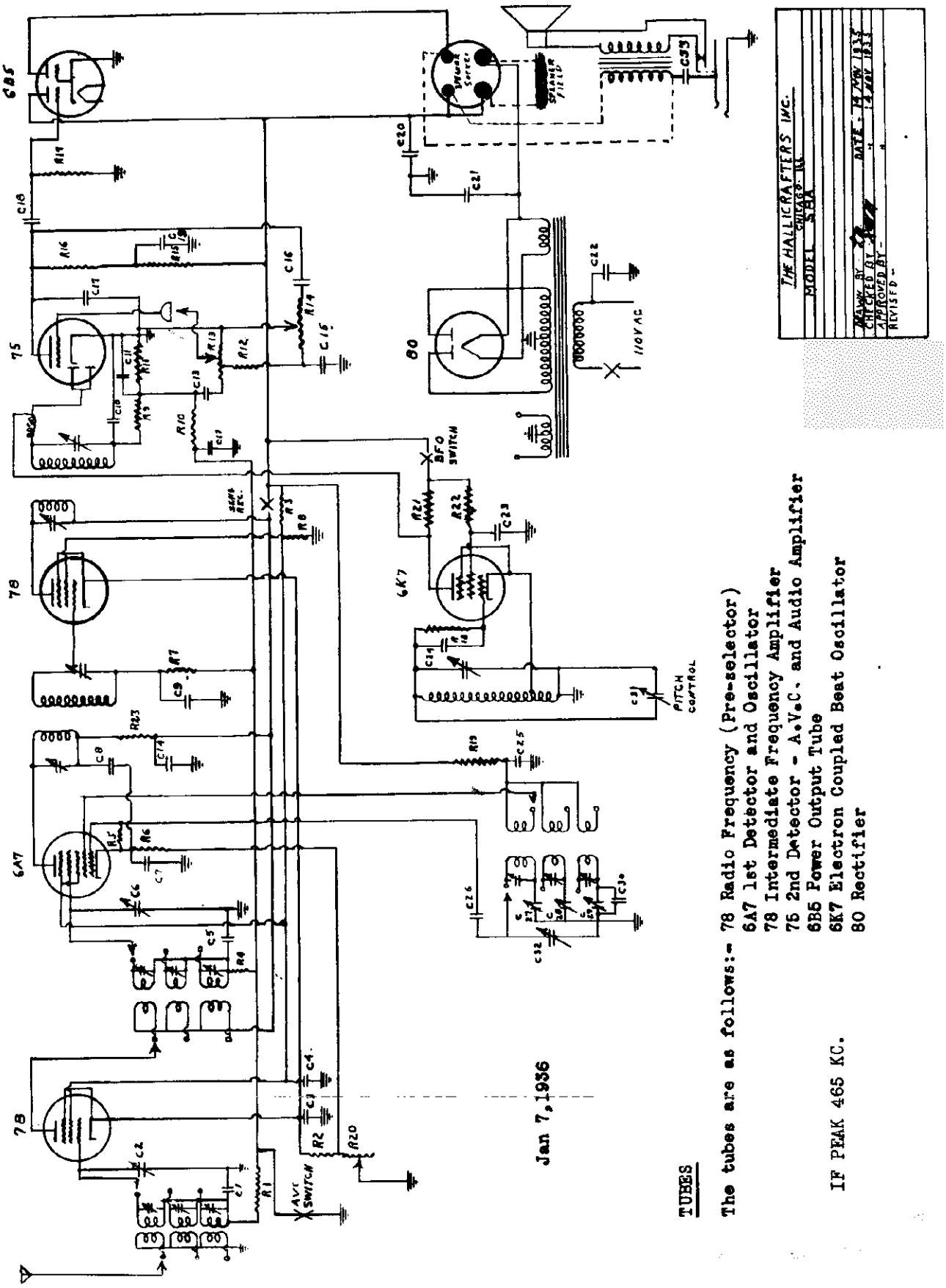

TUBES

The tubes are as follows:- 78 Radio Frequency (Pre-selector)
6A7 1st Detector and Oscillator
78 Intermediate Frequency Amplifier
75 2nd Detector - A.V.C. and Audio Amplifier
6B5 Power Output Tube
6K7 Electron Coupled Beat Oscillator
80 Rectifier

IF PEAK 465 KC.

© John F. Rider, Publisher

To properly align this receiver proceed as follows:- With the input signal from the beat oscillator connected to the grid of the 6A7 tube and set at 465 kc, adjust the I.F. trimmers mounted in the top of the two I.F. transformer cans, to a maximum output reading. Then, with the 465 signal still connected with the modulator off, switch on the beat oscillator and adjust the oscillator pitch control, mounted on the top of the I.F. can and controlled by a black knob to zero beat.

Connect the output of the generator into the antenna and grid terminal with a 400 ohm resistor in series with the antenna lead. Turn the wave change switch to Band No. 1 and set the dial to 15 megacycles. Set the oscillator frequency at 15 megacycles also and adjust the oscillator trimmer mounted in the coil shield under the place - choose the one with the trimmer at the least capacity position, then shift the dial off the frequency and align the RF and antenna trimmers to maximum noise level. This completes the alignment for this point.

Next - tune the receiver to 6000 kc and adjust the low frequency pad, which is located next to the wave change switch to maximum noise level - this trimmer is the one nearest the end switch head.

Follow this procedure for the other ranges, except that in range 3 use a .0001 condenser in place of the resistor, choosing as the alignment frequencies for No. 2 range, 4000 and 1800 kc and for No. 3 Range 1600 and 800 kc. After this is finished the receiver is completely aligned. Never align the No. 3 and No. 2 band first, for when the No. 1 band is aligned the other two will be out.

TUBE VOLTAGES

Sensitivity control at maximum - voltages check to ground.

		PLATE	SCREEN	CATHODE
78	1st R.F.	275	110	3
6A7	Osc. / Det. Osc.	275 / Plate 250	110	5
78	I.F.	275	110	3
75	Diode Det. / A.V.C. AF Amplifier	150		2½
6A7	Beat Osc.	10	80	0
6A6	Output Tube	270	275	20
80		375		

Weak all bands - check antenna leadin - tubes - voltages I.F. alignment

One Band - Check Switch Points - Leads to Coils - Coils for Continuity.

Hum - Check for Filament Grounded
Filter Condensers
Defective Tubes
Proper Polarization of AC Plug

Set Dead - Check Tubes - Coils - I. F. transformers for voltages and

grounds on all circuits.

Weak Audio - Check A.V.C. circuit -6B6 tube - speaker, Output trans. and Phone Jack.

Overload - Check A.V.C. tube and circuits - Oxide return circuits for grids - alignment.

When service of a highly technical nature is required, get in touch with a competent service man.

To put this receiver into operation on the broadcast range, turn your wave change switch, located under the main tuning control, until the pointer is at Band No. 3 - this is at the extreme left. Next turn your sensitivity to a maximum - your volume up approximately half way and your A.V.C. switch to the "on" position and from any log on broadcast station list, select some frequency which you know is received in your location. Turn the control knob until the black hand corresponds with the number on the dial scale, which is shown on the log.

The dial scale is marked plainly in kc and most station logs are also marked in kc, so this is comparatively simple. Then, with this station being received vary your different controls and familiarize yourself with their action, such as by switching the A.V.C. control on and off and you will notice with extreme volume that the set will overload considerably. However, this can be controlled by reducing the sensitivity control, but on the other hand it cannot be controlled by reducing the volume control, since the volume control is in the audio circuit only and the R.F. circuits in this condition will still overload.

This receiver is equipped with mechanical band spread, which is a dual ratio planetary drive mounted on the main tuning control. This gives a tuning ratio of approximately 65 to 1, which makes it possible by the use of this very high ratio control and the red point to locate and also to separate stations or signals very close together, which you will find is the case in all of the amateur bands and some of the broadcast bands. This type of band spread has an advantage, in that it allows a very good ratio between the main tuning control and the band spread control near the minimum portion of the tuning condenser.

The tuning range of this receiver is as follows:

Band No.1 - Domestic & Foreign S.W. Broadcast
Amateur 40 & 20 Meter Bands
17 to 5.5 megacycles
17000 to 55000 kilocycles

Band No.2 - Amateur 160 & 80 Meter Band -
Police - Aviation
5.4 to 1.65 megacycles
5400 to 1650 kilocycles
55 to 180 meters.

Band No.3 Standard Broadcast Band
1.7 to .64 megacycles
1700 to 540 kilocycles
176 to 555 meters

Each of the above bands are in megacycles, kilocycles and meters. The two shortwave bands are calibrated in megacycles - the broadcast band is calibrated in kilocycles.

OPERATION OF THE RECEIVER

The receiver comes to you in a completely tested condition, with all tubes in their respective sockets, so all that is necessary to plug the A.C. cord into a receptacle and the receiver is ready for operation.

All controls are mounted conveniently on the front panel and identified by their individual markers. The controls mounted on the front panel from right to left are as follows:

STAND-BY-SWITCH

This switch is used to make the receiver inoperative when transmitting and cuts out the plate voltage on the plates of the RF and IF amplifier tubes.

POWER SWITCH AND TONE CONTROL

The power switch is combined with the tone control and operates in a clockwise rotation - that is maximum bass is at extreme right. This control also can be used conveniently to reduce atmospheric interference by reducing the audio frequency range of the receiver. It consisted of a tapered variable resistor, connected from the grid of the power tube to ground with a fixed condenser connected from the variable arm to ground.

BAND CHANGE SWITCH

This switch mounted directly under the tuning control allows any one of the three ranges to be covered by the variable condenser and are marked to correspond with the band marking on the main tuning dial, which are shown at the left center of the dial - for instance if the 40 meter or 7000 kc range is desired, the number on the dial shows this to be band No.1 - then turn the band switch until the pointer is on No. 1.

VOLUME CONTROL

The volume control on this receiver differs somewhat from that on the ordinary broadcast receiver in that it does not affect the sensitivity of the set, but it does control the audio output of the set.

SENSITIVITY CONTROL

The sensitivity control is a special adjustment which controls the sensitivity of

You will find in receiving a straight CW or carrier frequency, which is transmitting code signals, that with the A.V.C. on these signals will have a tendency to run together. This can be eliminated by switching the A.V.C. to the "off" position, which cuts the A.V.C. out of the receiver. By properly adjusting the manual volume control and the sensitivity control, various combinations can be found, which gives the ideal signal to noise ratio for this particular signal being received, where if one alone were used, this would not be possible. This often proves true when listening to foreign broadcast reception. You will find by increasing your manual control to maximum and controlling the output by the sensitivity control only, that it will be possible to reduce the noise to such an extent that the signal will come through very good, where with the A.V.C. on and controlling the output by the volume control only, with the sensitivity in the maximum position, there still will be considerable noise coming through the receiver. This condition of course can only come about by constant use of the receiver and varying controls until one can learn just which position is best for this condition.

The purpose of the "transmit" and "receive" switch is to make the set inoperative when using radio transmitters and need only be used by those operating transmitting stations. The switch does not turn off the radio set entirely. The tubes remain lighted, thereby eliminating the necessity of waiting for the tubes to become hot again when the receiver is to be used. At all other times this switch should always be left in the "on" position.

Resistors

No.	Value Ohms	Rating Watts	Part No
R1	100,000	1/2	2093
R2	300	1/2	2021
R3	25,000	1	2075
R4	100,000	1/2	2093
R5	50,000	1/2	2084
R6	300	1/2	2021
R7	100,000	1/2	2093
R8	30,000	1	2076
R9	20,000	1/2	2072
R10	1 Meg	1/2	2108
R11	250,000	1/2	2099
R12	50,000	1/2	2084
R13	1/2 Meg	Vol.Control	2504
R14	1 Meg	Tone Control	2505
R15	100,000	1/2	2093
R16	250,000	1/2	2099
R17	500,000	1/2	2102
R18	100,000	1/2	2093
R19	10,000	1	2061
R20	10,000	Sen.Control	2508
R21	100,000	1/2	2092
R22	60,000	1/2	2088
R23	1,500	1/2	2039

Condensers

No.	Value Mfd.	Type	Rating Volts	Part No
C1	.02	Paper	200	4102
C2	.00045	Var.Cond.		4807
C3	.05	Paper	200	4104
C4	.05	Paper	400	4105
C5	.02	Paper	200	4102
C6	.00045	Var.Cond.		4807
C7	.05	Paper	200	4104
C8	.02	Paper	400	4103
C9	.02	Paper	200	4102
C10	.0001	Mica	500	4003
C11	.0001	Mica	500	4003
C12	.02	Paper	200	4102
C13	.05	Paper	200	4104
C14	.1	Paper	400	4107
C15	.01	Paper	200	4100
C16	.002	Mica	500	4013
C17	.00025	Mica	500	4007
C18	.05	Paper	400	4105
C19	.1	Paper	400	4107
C20	8.	Elect.	450	4208
C21	8.	Elect.	450	4208
C22	.01	Paper	400	4101
C23	.01	Paper	400	4101
C24	.00025	Mica	500	4007
C25	.25	Paper	400	4109
C26	.0001	Mica	500	4003
C27	.00039	Var.		
C28	.0012	Pads	(One Unit)	4401
C29	.001			
C30	.002	Mica	500	4312
C31	.00005	Var.Cond.		4808
C32	.00045	Var.Cond.		4807
C33	.005	Mica	1000	4301

Jan 7, 1936

HALLICRAFTERS, INC.

MODELS S9, SK9
Schematic, Socket
Trimmers

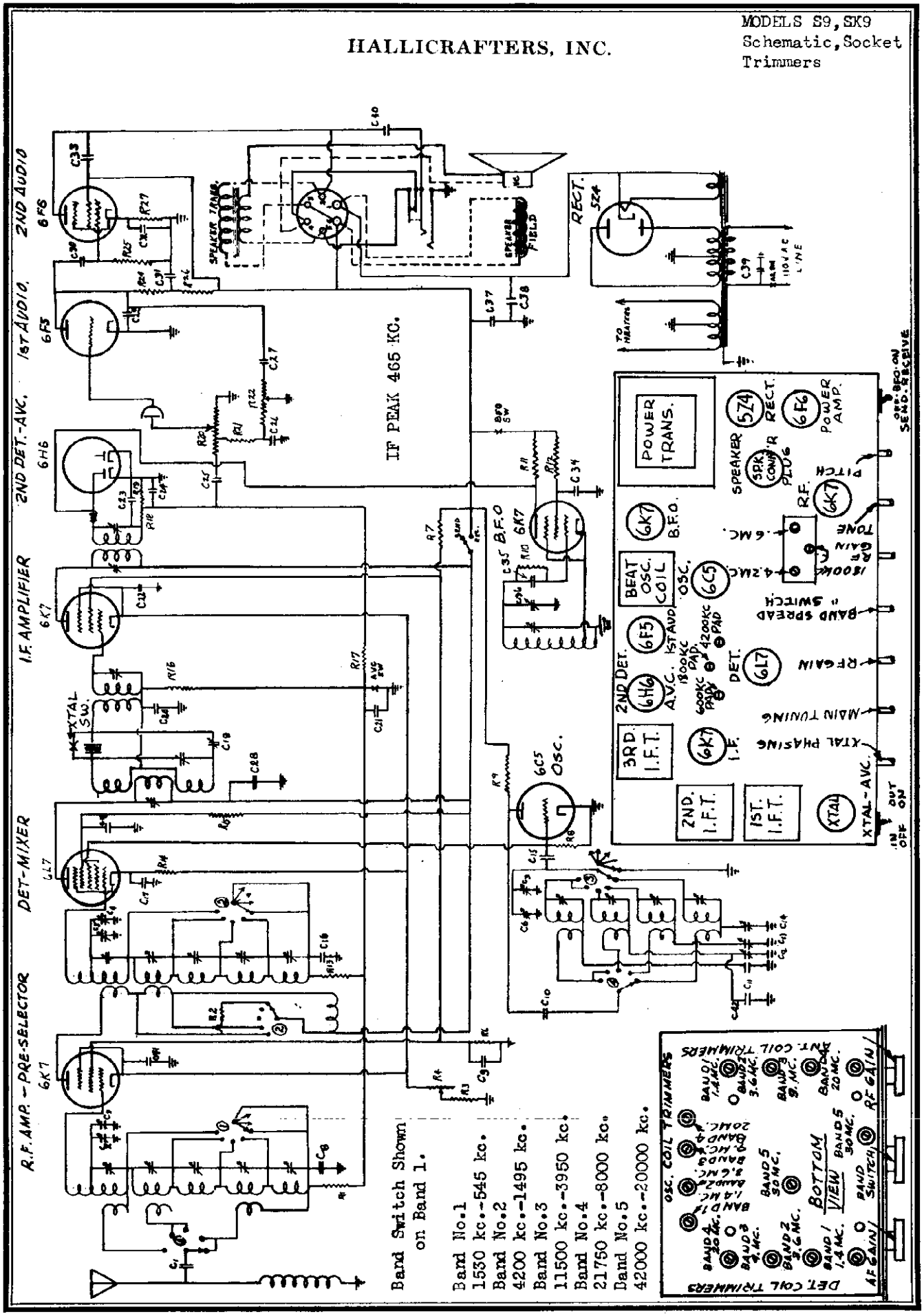

© John F. Rider, Publisher

MODELS S9, SX9
Circuit Data
Alignment, Parts

HALLICRAFTERS, INC.

CIRCUIT

The plate circuit of 6K7 R.F. amplifier has a high inductance plate load which gives maximum transfer by use of capacity coupling at low frequency end of the bands. By use of coupling in this manner, the gain varies about 3 to 1 from one end to the other, being least at high frequency end. The capacity coupling combines with this to help get uniformity throughout.

The 6J7 used here as detector-mixer has no parallel in glass tubes. The combination of the oscillator circuit is coupled to this tube by use of an extra grid. Due to not having oscillator plate current flowing in the first detector, the ratio of transition to cois is considerably better than in composite tubes or in circuits where the oscillator and 8 tubes are connected together.

The 6D6 OSCILLATOR - covers only four bands. The harmonic of No. 4 band is used to supply the oscillator voltage for the conversion of signals to I.F. frequency, when using Band 5. The oscillator circuit is a combination of the Hartley and the Colpitts having the inherent features of both - the Hartley with the good oscillation at the high frequency ends of bands and the Colpitts where oscillation is better at low frequency ends of bands.

By this method the oscillator generates a fairly constant voltage for impression on grid 8 of 6J7 over the full tuning ranges of the set.

1st I.F. - this transformer is made up of 3 coils phased in such a relation that maximum signal is impressed upon the low inductance primary of 2nd I.F. transformer. The crystal and crystal phasing circuit is inserted between these transformers in such a manner that when the crystal switch is at "in" position, the crystal and crystal phasing condenser cause single signal action to take place - this action varies by the setting of crystal condenser - when switch is at "out" position the signal is impressed directly on the second transformer.

The 2ND I.F. TRANSFORMER has a step up ratio so that the voltage impressed on grid of 6K7 I.F. amplifier, is increased over the normal I.F. transformer connections. By the use of a transformer the grid circuit of this tube is tuned to the I.F. frequency, so that greater selectivity is achieved. Then, if a choke coil is used to supply this tube.

Transformers used at Intermediate Frequencies are of iron core combination - greater selectivity and gain, due to better Q of the coils is achievable than by the use of air core coils.

The signal to noise ratio if iron core coils, due to a better Q, shows a marked improvement over other types of transformers.

The 6H6 (I.F. Amplifier) is coupled through an iron core transformer to single diode plate of 6H6. The single plate being used in order to lessen the load on the secondary of this transformer, making for greater selectivity in this circuit.

The ratios of 10 & DC diode load are proportionate so that 100% modulation can be handled without distortion.

As will be noted from the circuit diagram (Fig. 2), the AVC voltage and the audio voltage are taken off slightly below ground potential. This was done to reduce stray R.F. in the circuit and to give better AVC action on the R.F. 1st detector and I.F. stages.

6H6 BEAT FREQUENCY OSCILLATOR - this is electron coupled oscillator - coupled to the diode plate by the "wing" of 6H6 tube and is tuned by the use of the pitch control. Changes in the voltage will cause the frequency to vary, but will not affect the frequency of beat oscillator. The frequency can be controlled by the use of the pitch control in order that a zero beat can be had on other side of signal giving further selectivity on code reception by choice of audio frequencies.

AUDIO - FIRST STAGE AUDIO 6H6 - is a high MU triode. It is coupled to the diode circuit through the volume control (22Z) and condenser (22B). As will be noted from the circuit no DC flows through this control, making for quiet operation.

TONE CONTROL - it will be noted that tone control (22Z) is connected on plate circuit side of the grid circuit, when the control is full counter clockwise (treble position). The tone is normal. As the control is moved to the right up to the half rotation the base response is increased without cutting of high notes. Moved through the other half of the rotation the high notes are removed by use of condenser (22T) without further increasing low note response.

In order to avoid frequency discrimination found in cathode - resistor - condenser bias circuits, the Mallory bias cell is used on the grid of 6P6. This proves a boon for those operators in that it insures greater intelligibility in all voice, short wave broadcasts, etc.

OUTPUT 2Amb - a 6Z6 pentode, giving 3.6 watts output is connected to the speaker and headphone jack. This jack is arranged in circuit in such way that when phones are inserted the voice coil of speaker is opened. A separate magnetic or permanent magnetic speaker can be plugged into phone jack if external speaker is desired. There an electro dynamic speaker has its own field supply, this too may be plugged in. Speaker impedance in these cases should be 7000 ohm, although other types can be used at a sacrifice in tone quality. No DC current flows through headphone circuit.

ALIGNMENT INSTRUCTIONS OF SIX SUPER SKYRIDER

Correct alignment of any receiver is extremely important. The receiver when it leaves the factory is properly aligned with precision instruments and realignment should not be attempted until all other possible causes of faulty operation have been investigated and even then not unless the service technician has the proper equipment. A signal generator that will provide an accurately calibrated signal at .465 m.c. - .6 m.c. - 1.4 m.c. - 3.8 m.c. - 4.2 m.c. - 9. m.c. - 20. m.c. and 30. m.c. and an output indicating meter are required.

It is practically impossible to align the s.s. unless a satisfactory oscillator and output meter are used. Use a non-magnetic screw driver for adjustments. The complete procedure is as follows:

I.F. Adjustment - in a receiver which has a crystal filter, a crystal controlled oscillator must be used in which the crystal from the radio is used to control the frequency. Connect the output of this through a .1 mfd condenser to the grid of the 6J7. Connect the ground lead of the radio to the ground side of oscillator. (On a receiver without crystal filter, set the signal generator at 465). Turn the band selector switch to Band No. 1. Turn the AVC crystal switch to off position, the audio gain and R.F. gain controls to maximum position (full right). Beat frequency oscillator switch off, set the crystal phasing condenser to one-half capacity that is,plates intermeshed about one-half way. Use this procedure for the signal generator to prevent overloading the receiver. Use this type of the I.F. core until maximum output, as indicated by the output meter is observed. The adjustment screws for these trimmers are located on the top of the I.F. transformer cans and may be reached from the top of the chassis. The location of these cans is shown in Fig. 3.

ADJUSTMENT BEAT FREQUENCY OSCILLATOR

Leave signal generator crystal oscillator on as in alignment I.F.'s, except turn off the modulation. Set the pitch control condenser at one-half capacity. Turn Beat Frequency Oscillator switch to "on" position and adjust the trimmer in the top of the Beat Frequency Oscillator coil can to "zero" beat.

ALIGNMENT OF R.F. STAGES - ADJUSTMENT OF BAND 5

Turn the band spread dial to 2000, minimum position in this and all subsequent adjustments. Connect the antenna lead of the receiver through a 400 ohm resistor to the output meter. Use this 400 ohm dummy antenna on all bands except band 1. Where 200 mmfd condenser is used, turn the signal generator to 20. m.c. Set the main tuning dial at 20 m.c., the band switch at No. 4 position, 20. m.c. Set trimmer marked bands 4 and 5 - 20 m.c. until maximum output is obtained. The location of this trimmer is shown in Fig. 4. Reset the signal generator to 30 m.c., switch to band No. 5 and tune in the signal with the main tuning condenser. Adjust the antenna and detector coil, trimmers marked band 5 for maximum output.

ADJUSTMENT OF BAND 4

Set the signal generator at 18 m.c., tune in this signal, adjust the antenna and detector coil trimmer until maximum output is obtained. The location of this trimmer is shown in Fig. 4. Leave oscillator trimmer set as in Band 5.

ADJUSTMENT OF BAND 3

Set the signal generator at 9 m.c.,set the main tuning dial at 9 m.c., switch on Band 3, adjust oscillator trimmer marked Band 3, 9 m.c. to maximum output, adjust trimmers on the antenna and detector coils until maximum output is obtained. Reset signal generator at 4.2 m.c., tune this signal in with the main tuning condenser and adjust 4.2 m.c. padder for maximum output, while gradually rotating the main tuning condenser back and forth. Location of this padder is shown in Fig. 3 and Fig. 4.

ADJUSTMENT OF BAND 2

Set the signal generator to 3.8 m.c. with the band crystal on band No. 2 - turn the main tuning condenser to 3.8 m.c., adjust the band 2 oscillator trimmers until maximum output is obtained, then set band switch to No. 2 position and adjust the antenna and detector coils to maximum output. Reset the signal generator to 1.8 m.c., tune this signal in with the main tuning condenser and adjust 1.8 m.c. padder for maximum output, while gradually rotating the main tuning condenser back and forth. Location of this padder is shown in Fig. 3 and Fig. 4.

ADJUSTMENT OF BAND 1

Change the dummy antenna from 400 ohm to 200 mmf condenser. Set the signal generator at 1.4 m.c. with the band switch on band No. 1 - turn the main tuning condenser to 1.4 m.c. Adjust the band 1 oscillator trimmer until maximum output is obtained. Then adjust Band #1 trimmers on the antenna and detector coils to maximum output. Reset the signal generator to .6 m.c. - tune this signal in with the main tuning condenser and adjust .6 m.c. padder for maximum output while gradually rotating the main tuning condenser back and forth. Location of this padder is shown in Fig. 3 and Fig. 4.

The location of the tubes and I. F. transformers and the purpose of each are shown in Fig. 3. The location of all trimmers and padders is shown in Fig. 4. The adjustment of trimmers and padders in another rotation will not give correct alignment of the receiver. Phase adjustments are accessible from the bottom of the chassis. The location and purpose of all controls are shown in Fig. 1. Schematic diagram of receiver is given in Fig. 2.

Jan. 27, 1936.

No.	Resistors: Value Ohms	Watts Rating	Tol.	Part No.
11	100,000	1/2	10%	2098
12	2,500	1/2	10%	2042
13	?	1/2	10%	2052
14	10,000	Resisting Coil		2050
15				
16	25,000			2073
17	25,000			2073
18	50,000			2084
19	25,000			2073
110	100,000			2085
111	100,000			2085
112	50,000			2084
113	100,000			2085
114	?			2814
115	50,000			2075
116	100,000			2085
117	1 Meg			2106
118	30,000			2075
119	500,000			2102
120	1/4 Meg			2803
121	50,000			2084
122	1 Meg			2803
123				
124	250,000			2090
125	250,000			2090
126	100,000			2085

No.	Condensers: Value Mfd.	Volts Rating	Tol.	Type		Part No.
01	.00025	600V	20%	Mica		4007
02	.0000018			Hand Spread Con-		4008
03	.0000018			" "		
04	.0000018			" "		
05	.0000462			Main Tuning	"	4021
06	.0000462			" "	"	
07	.0000462			" "	"	
08	.006	600V	5%	Mica		4317
09	.1	400V	20%	Paper		4107
010	.006	600V	5%	Mica		4013
011	.004	600V	5%	Mica		4313
012	.0017-Appr.			Padders	One Strip-4400	
013	.001			"		
014	.0004			"		
015	.00006	600V	10%	Mica		4021
016	.006	600V	5%	Mica		4317
017	.05	400V	20%	Paper		4104
018	.25	400V	20%	Paper		4109
019	.000025			Crystal Phas.		4804
020	.02	200V	20%	Paper		4105
021	.05	200V	20%	Paper		4104
022	.1	200V	20%	Paper		4108
023	.00025	600V	10%	Mica		4007
024	.00025	600V	10%	Mica		4007
025	.05	200V	20%	Paper		4104
026	.006	600V	5%	Mica		4313
027	.006	600V	5%	Mica		4313
028	.1	400V	20%	Paper		4109
029	.25	400V	20%	Paper		4109
030	.05	200V	20%	Paper		4009
031	.1	400V	20%	Paper		4105
032	.05	200V	20%	Paper		4107
033	.004	1000V	20%	Mica		4800
034	.05	400V	20%	Paper		4105
035	.00025	600V	10%	Mica		4106
036	.000025			Var. Cond.		4805
037	8 mfd	450V		Elec.		4810
038	8 mfd	450V		Elec.		4810
039	.05	400V	20%	Paper		4106
040	.006	1000V	20%	Mica		4801
041	.05	200V	20%	Paper		4104
042	.0005	600V	5%	Mica		4306

©John F. Rider, Publisher

MODEL MG-5
MODEL 5LE
Schematics
Socket

HALSON RADIO MFG. CORP.

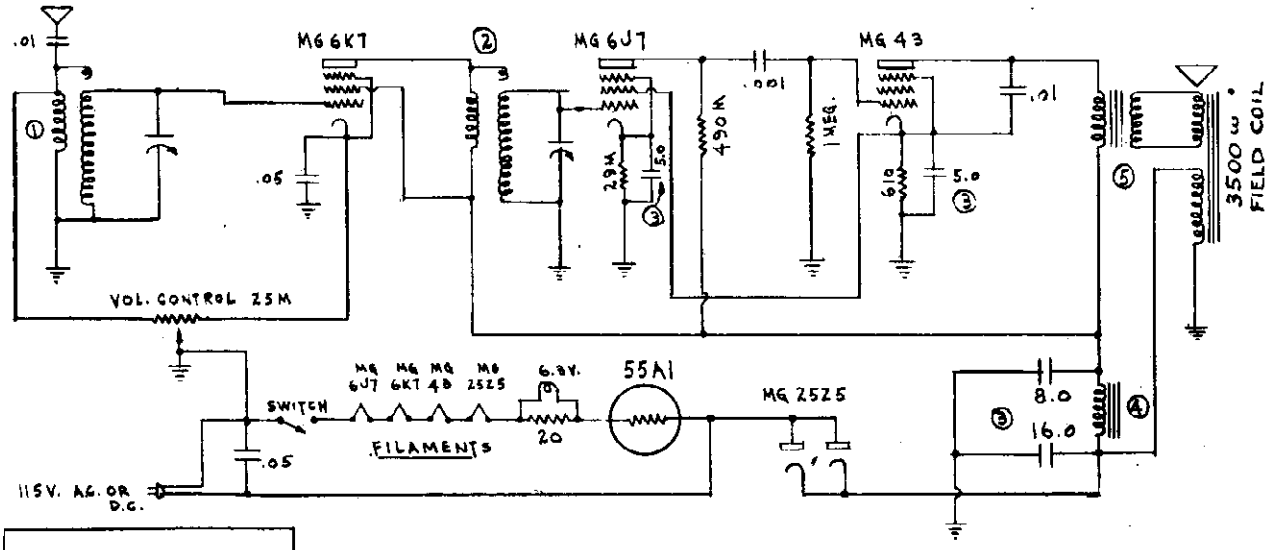

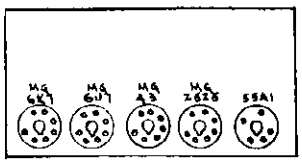

REAR OF CHASSIS

1 = 1406 ANTENNA COIL
2 = 1407 R. F. COIL
3 = MG5 ELECTROLYTIC COND. 16-8-5-5 MFD.
4 = 1281 FILTER CHOKE 400W
5 = 1418 SPEAKER ASS'Y

HALSON NUMBER
MG 5

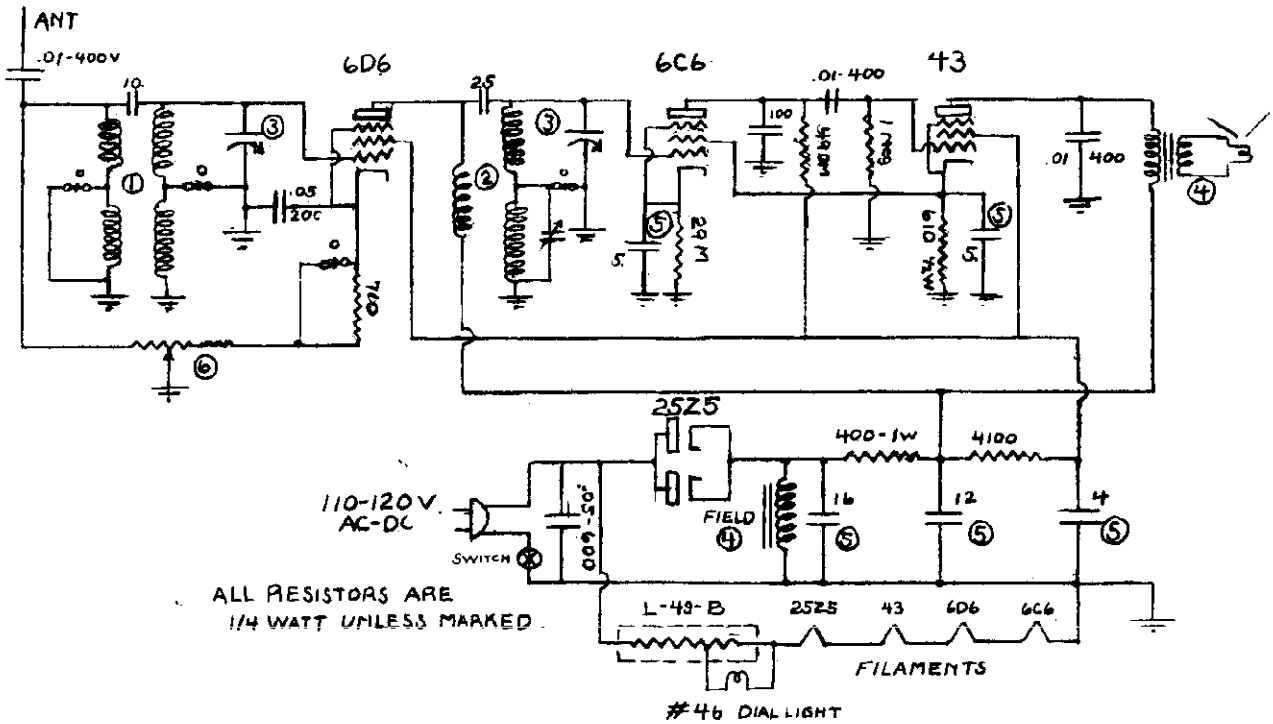

1- 1800 ANT. COIL
2- 1801 R.F. COIL
3- 1745 VARIABLE COND.
4- 1768 SPEAKER ASSEMBLY
5- 1751-1 ELECTROLYTIC COND.
6- 1748 VOL. CONTROL

MODEL 5L-E

MODEL AW6
Schematic
Socket

HALSON RADIO MFG. CORP.

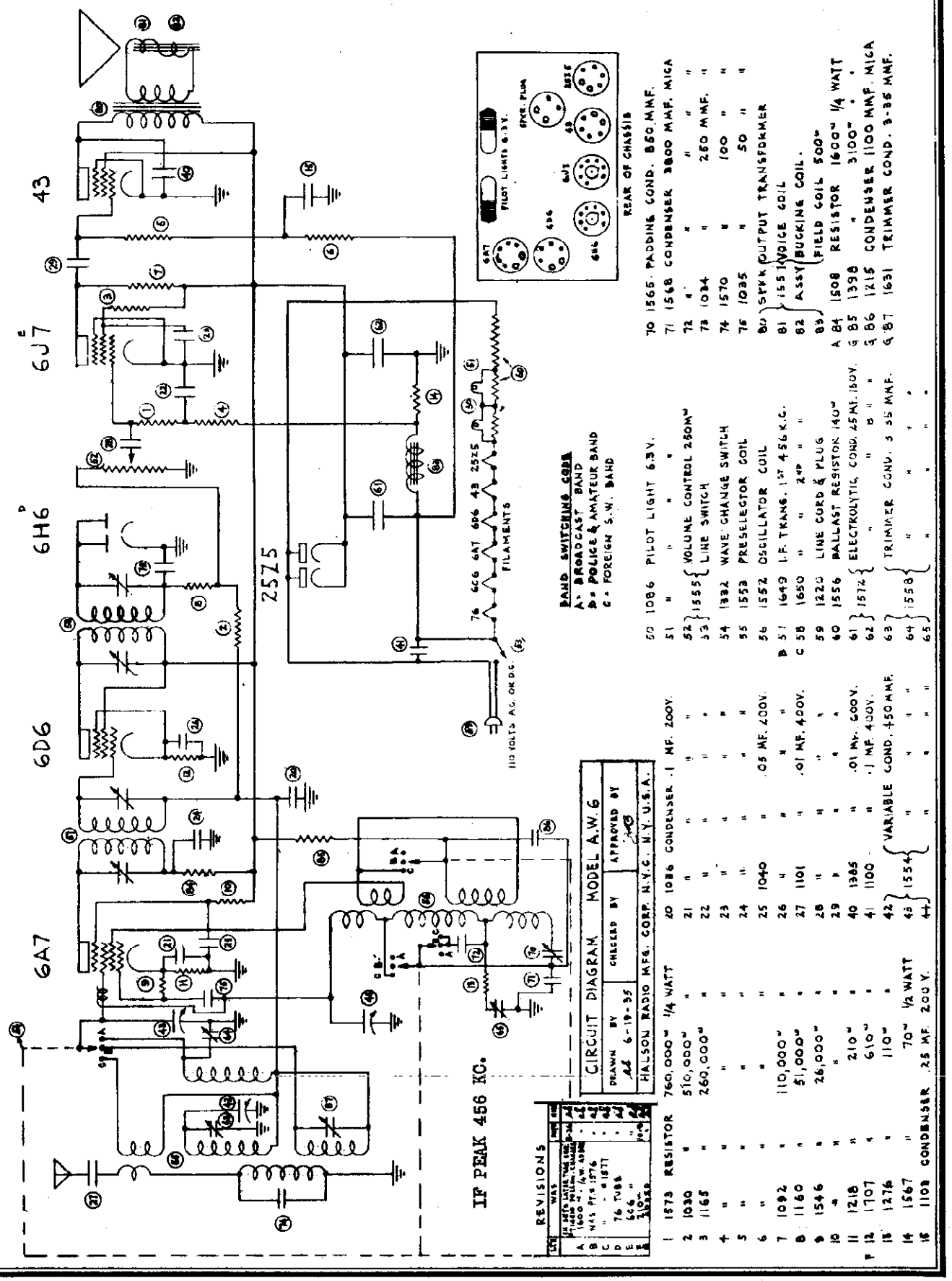

1	1573	RESISTOR	760,000Ω	1/4 WATT	20	1036	CONDENSER	.1 MF. 200V.
2	1030	"	510,000Ω	"	21	"	"	" "
3	1165	"	260,000Ω	"	22	"	"	" "
4	"	"	"	"	23	"	"	" "
5	"	"	"	"	24	"	"	.05 MF. 400V.
6	"	"	"	"	25	1040	"	" "
7	1092	"	110,000Ω	"	26	"	"	" "
8	1160	"	51,000Ω	"	27	1101	"	.01 MF. 400V.
9	1546	"	26,000Ω	"	28	"	"	" "
10	"	"	"	"	29	"	"	" "
11	1218	"	210Ω	"	40	1385	"	.01 MF. 600V.
F 12	1707	"	610Ω	"	41	1100	"	.1 MF. 400V.
13	1276	"	110Ω	"	42	1554	VARIABLE COND. 450 MMF.
14	1567	"	70Ω	1/2 WATT	43			
15	1109	CONDENSER	.25 MF.	200 V.	44			

50	1086	PILOT LIGHT	6.3 V.						
51	"	"	"	"					
52	1555	VOLUME CONTROL	250MΩ						
53		LINE SWITCH							
54	1382	WAVE CHANGE SWITCH							
55	1553	PRESELECTOR COIL							
56	1552	OSCILLATOR COIL							
B 57	1649	I.F. TRANS. 1ST	456 K.C.						
C 58	1650	" " 2ND	" "						
59	1223	LINE CORD & PLUG							
60	1556	BALLAST RESISTOR	140Ω						
61	1574	ELECTROLYTIC COND.	45 MF. 150V.						
62		" "	" "						
63	1558	TRIMMER COND.	5-35 MMF.						
64		" "	" "						
65		" "	" "						

70	1565	PADDING COND.	850 MMF.						
71	1568	CONDENSER	3800 MMF.	MICA					
72	"	"	"	"	"				
73	1034	"	250 MMF.	"					
74	1570	"	100 "	"					
75	1035	"	50 "	"					
80		SPKR. OUTPUT TRANSFORMER							
81	1551	VOICE COIL							
82		ASSY. BUCKING COIL.							
83		FIELD COIL 500Ω							
A 84	1508	RESISTOR	1600Ω	1/4 WATT					
S 85	1398	"	3100Ω	"					
S 86	1215	CONDENSER	1100 MMF.	MICA					
S 87	1631	TRIMMER COND.	3-35 MMF.						

© John F. Rider, Publisher

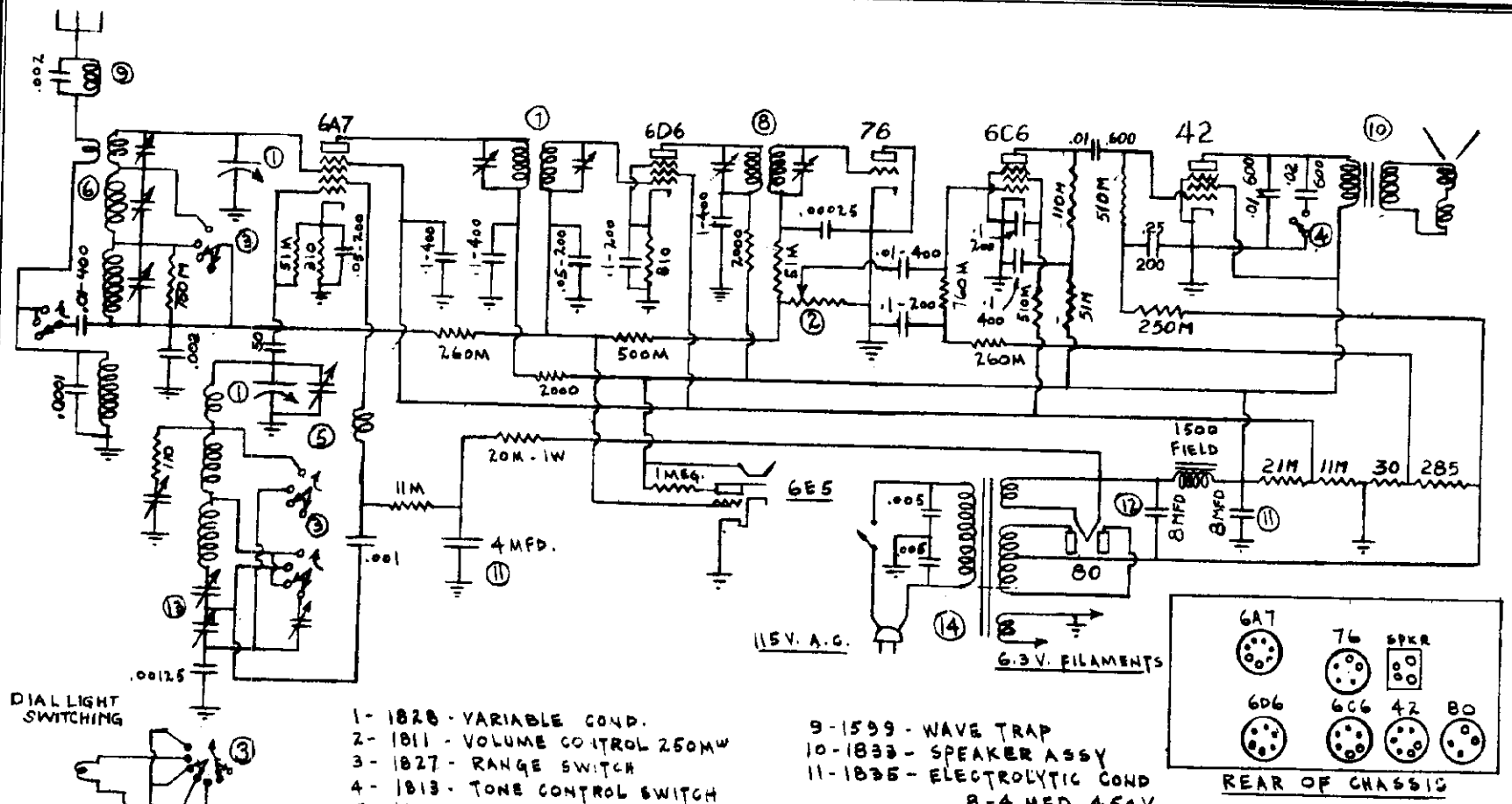

1- 1828 - VARIABLE COND.
2- 1811 - VOLUME CONTROL 250MW
3- 1827 - RANGE SWITCH
4- 1813 - TONE CONTROL SWITCH
5- 1660-2 - OSCILLATOR COIL
6- 1661-2 - ANTENNA COIL
7- 1879 B - 1ST I.F. TRANS. 456 K.C.
8- 1899 D 2ND " " " "

9- 1599 - WAVE TRAP
10- 1833 - SPEAKER ASSY
11- 1835 - ELECTROLYTIC COND 8-4 MFD. 450 V.
12- 1652 - ELECTROLYTIC (WET) COND. 8 MFD - 450 V.
13- 1902 - DUAL PADDER - 90-425, 200-750 MMF.
14- 1597 - POWER TRANSFORMER

IF PEAK 456 KC.

PURCHASED OR MADE	NAME: CIRCUIT DIAGRAM - MODEL 6L6		
FINISH	VENDOR	DATE ISSUED: 3-20-36	HALSON NUMBER 6L6
MATERIAL	DRAWN BY: C.L.H.	CHECKED BY	APPROVED BY: JB

HALSON RADIO MANUFACTURING CORPORATION, NEW YORK, U.S.A.

HALSON RADIO MFG. CORP.

HALSON PAGE
MODEL 6L
Schemati
Socket

MODEL 50S
Schematic
Socket

HALSON RADIO MFG. CORP.

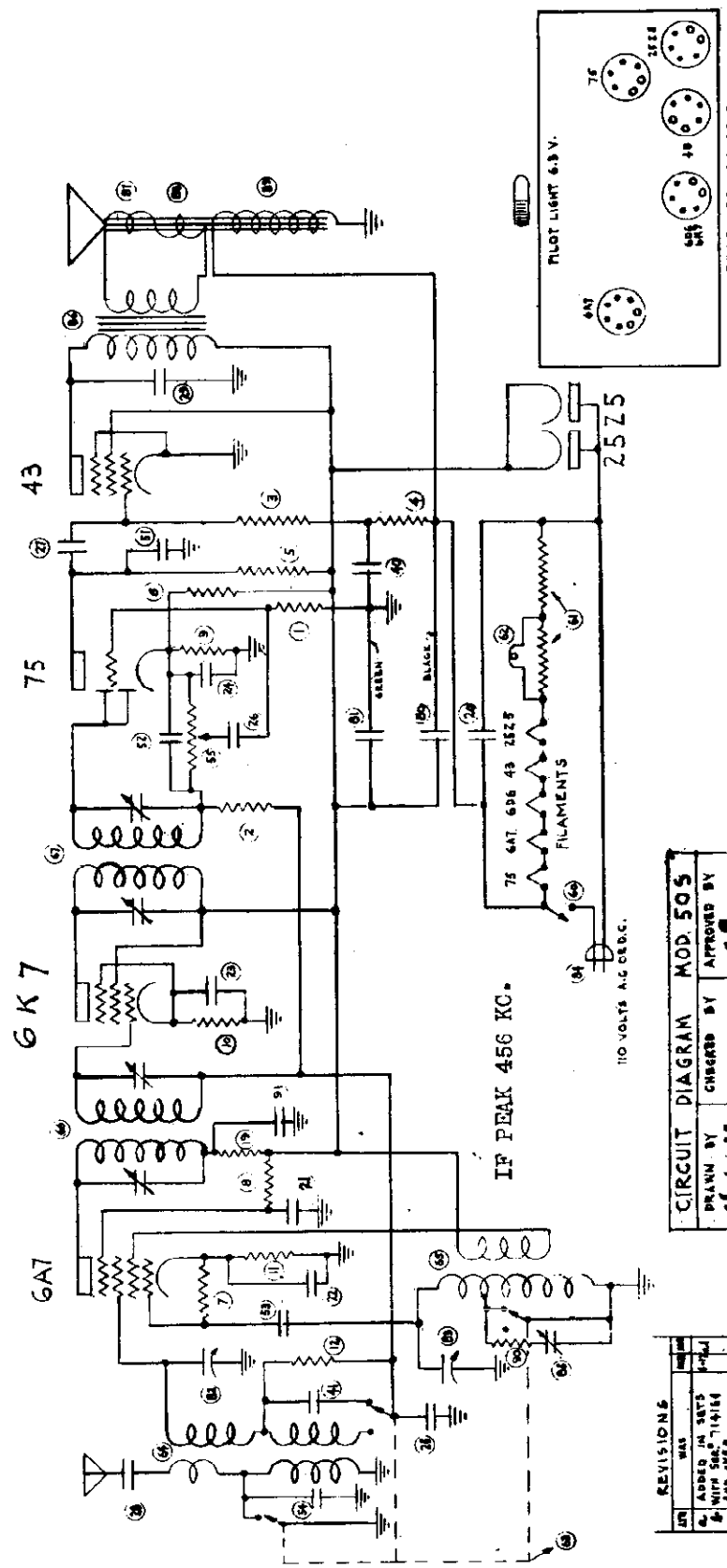

CIRCUIT DIAGRAM MOD. 50S		
DRAWN BY AS 6-1-38	CHECKED BY	APPROVED BY
HALSON RADIO MFG. CORP. N.Y.C. U.S.A.		

REVISIONS		
LTR	WAS	
A	ADDED IN SETS WITH SER. # 11414 AND OVER	
B	1100 RESISTOR ADDED	

1	1094	RESISTOR	1.1 MEG	¼ WATT	20	1038	CONDENSER	.05 MF. 400V.	81	1034	CONDENSER 250 MMF. MICA
2	"	"	"	"	21	1040	"	.05 MF. 200V.	82	"	" " "
3	1165	"	260,000	"	22	"	"	" "	83	1549	" 25 MMF. "
4	"	"	"	"	23	"	"	" "	84	1542	VOL CONTROL 250,000
5	1092	"	110,000	"	24	"	"	" "	85		LINE SWITCH
6	1160	"	51,000	"	25	"	"	" "	86	1545	BALLAST RESISTOR
7	1546	"	26,000	"	26	1101	"	.01 MF. 400V.	87	1086	PILOT LIGHT 6.3V.
8	"	"	"	"	27	"	"	" "	88	1543	RANGE SWITCH
9	1159	"	510	"	28	"	"	" "	89	1837	ANTENNA COIL
10	1243	"	260	"	29	"	"	" "	90	1538	OSCILLATOR COIL
11	"	"	310	"	40	1103	"	.25 MF. 400V.	91	1535	I.F. TRANSFORMER 456 K.C.
12	1080	"	510,000	"	41	1540	"	900 MMF. MICA	67	1536	" " "

80	1533	ELECT. COND.	.25 MF.	150 V.	84	1220	LINE CORD & PLUG				
81		" "	8 MF.	150 V.	85	1847	TRIMMER COND.	5-70 MMF.			
82	1539	VARIABLE COND.	370 MMF.		86	1545	OUTPUT TRANSFORMER				
83		" "	250	"	87	SPEAK.	VOICE COIL	3"			
					88	ASSY	BUCKING COIL				
					89		FIELD COIL	500"			
					90	1276	RESISTOR	110"	¼ WATT		
					91	1036	CONDENSER	.1 MF.	200V.		

MODEL 50X
Schematic
Socket

HALSON RADIO MFG. CORP.

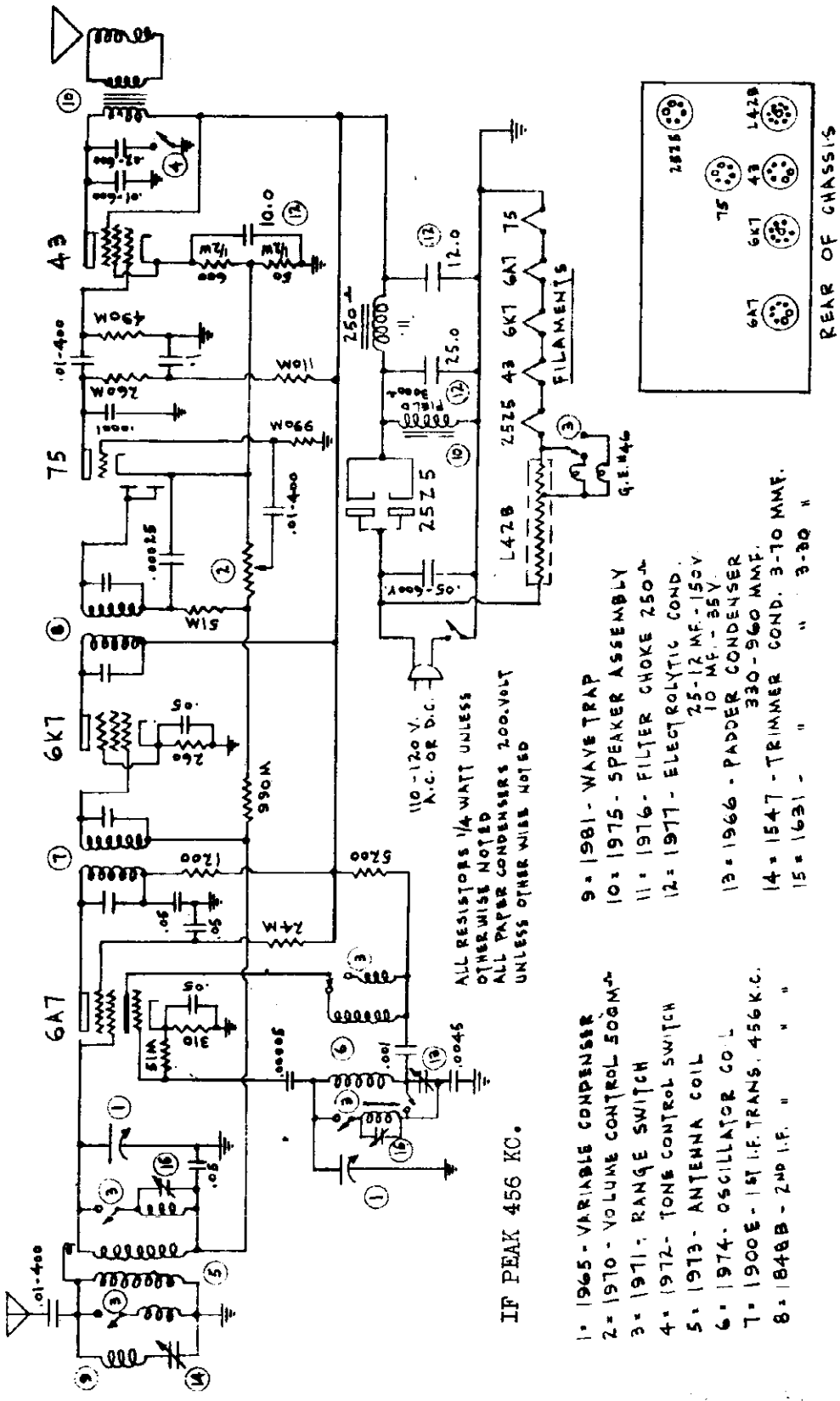

©John F. Rider, Publisher

MODEL 60M
Schematic

HALSON RADIO MFG. CORP.

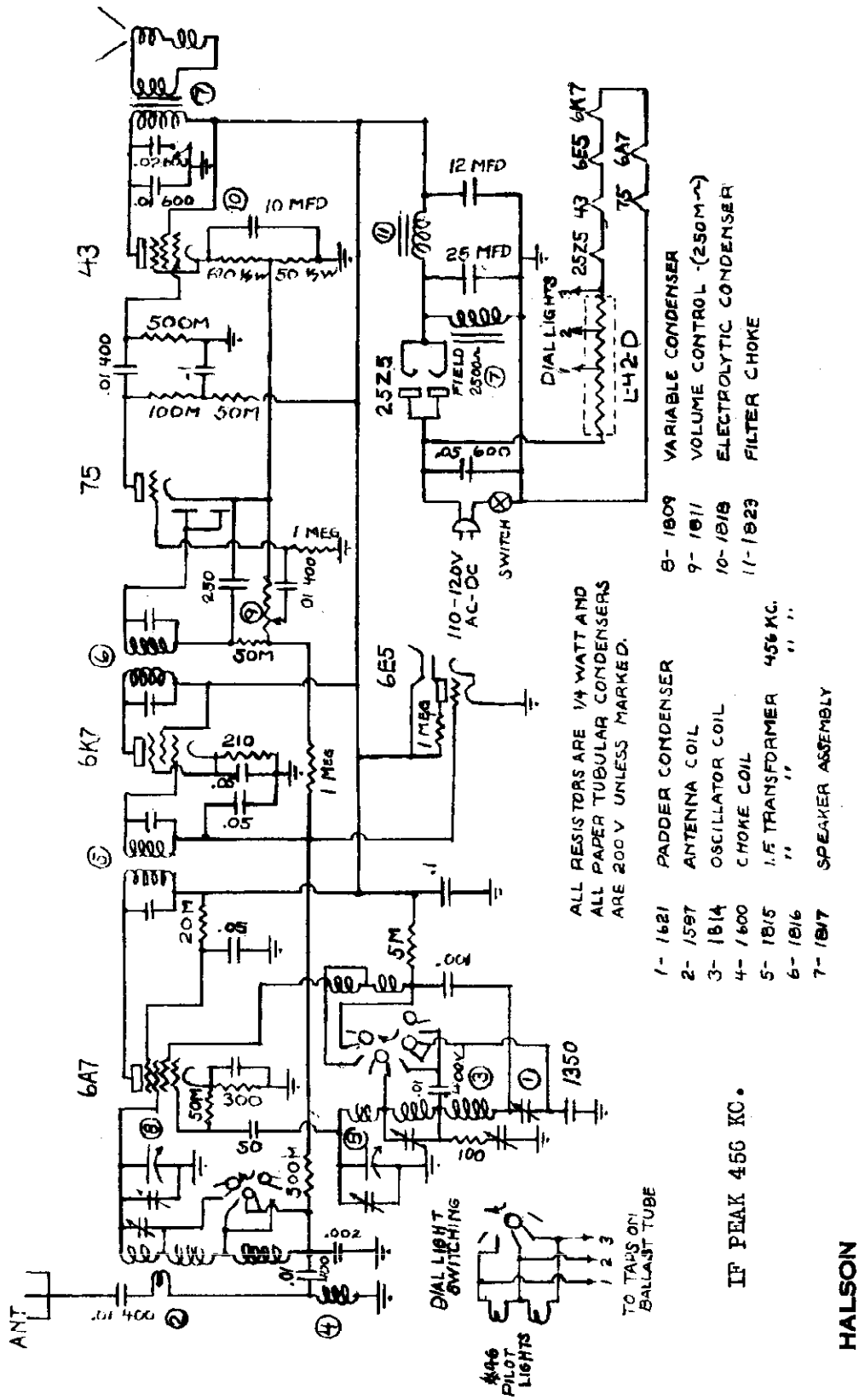

©John F. Rider, Publisher

MODEL 6
Schemat

HALSON RADIO MFG. CORP.

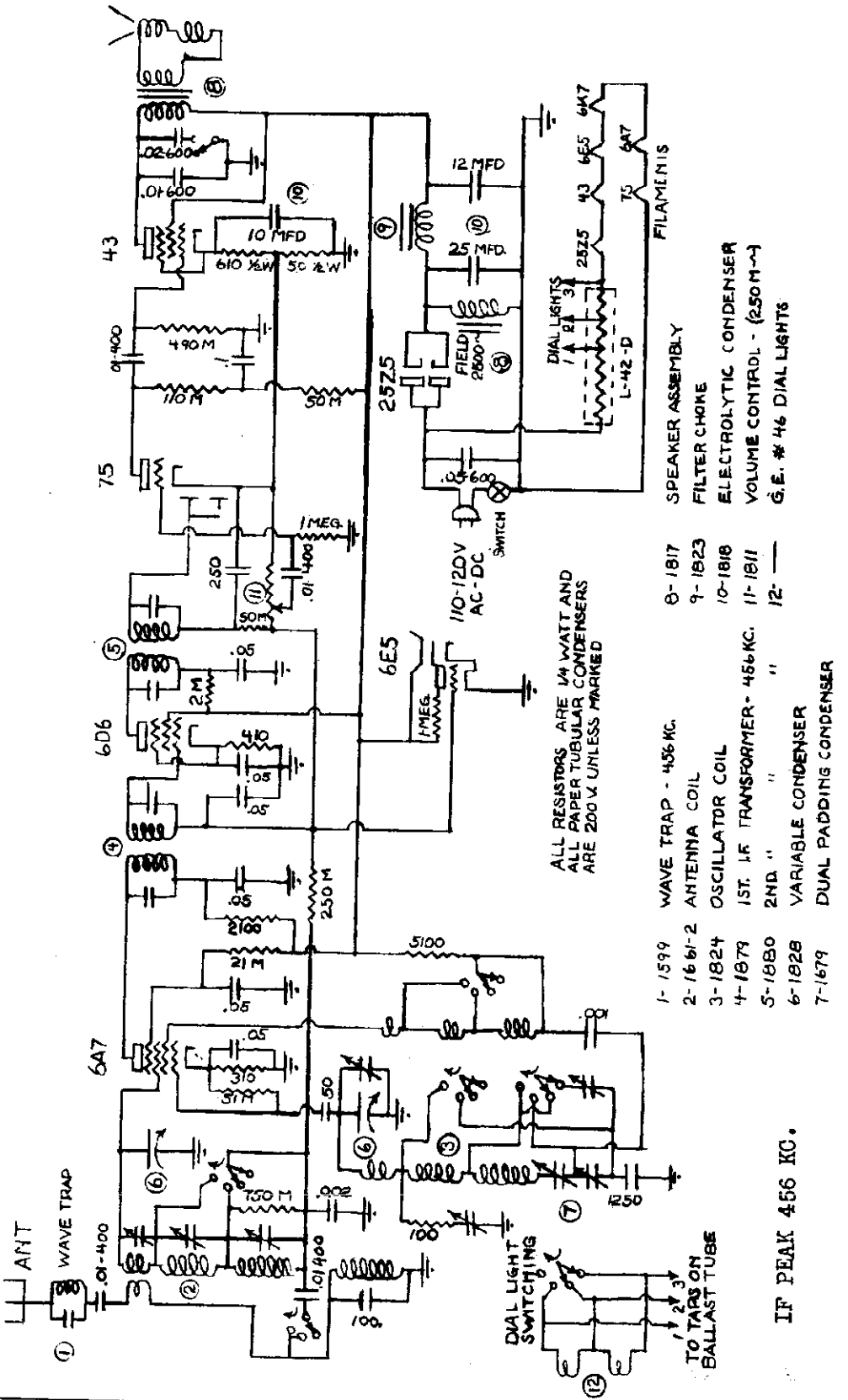

©John F. Rider, Publisher

MODEL MA63
Schematic
Socket

HALSON RADIO MFG. CORP.

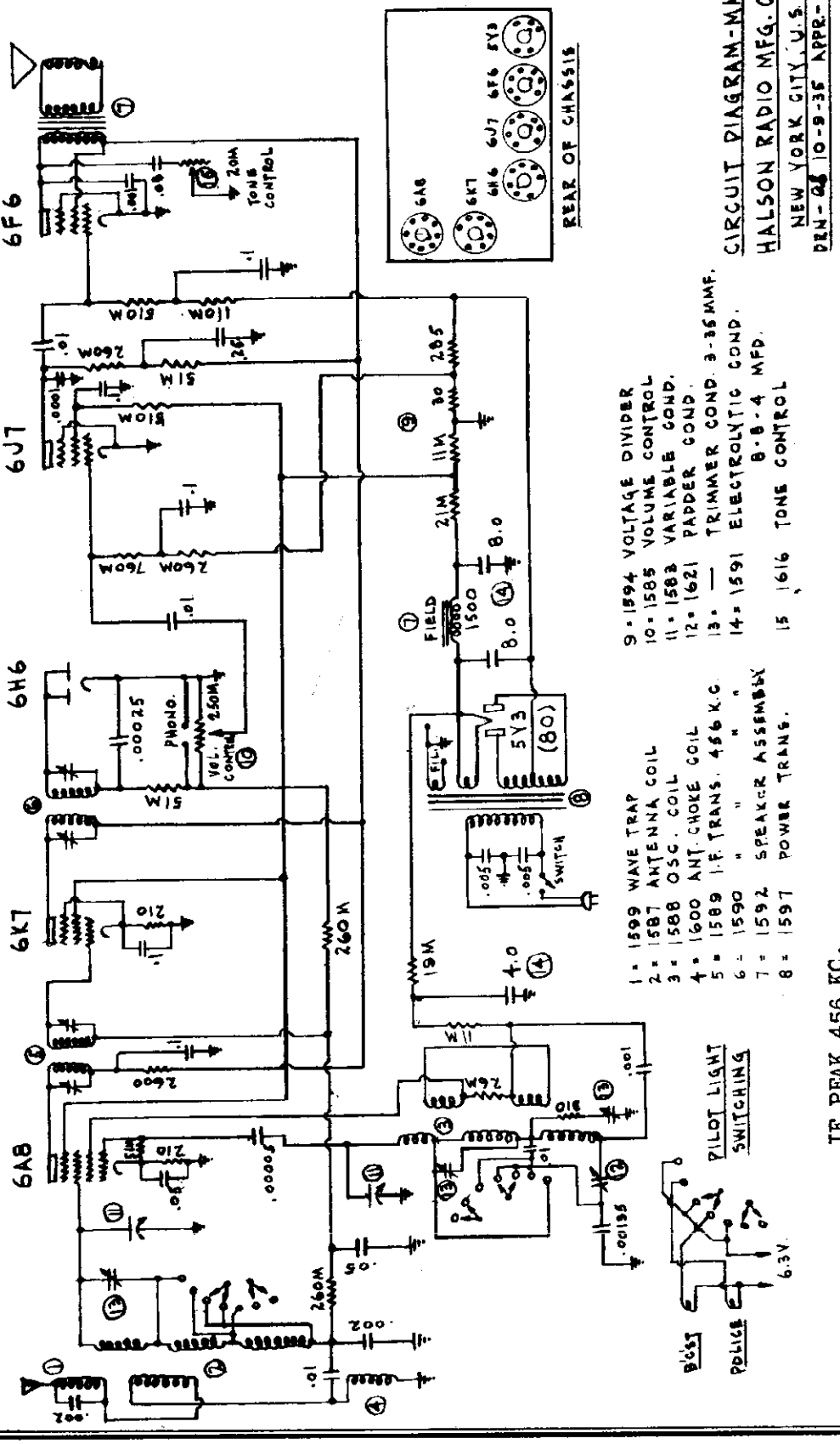

©John F. Rider, Publisher

MODELS 100,100M
Schematic
Socket

HALSON RADIO MFG. CORP.

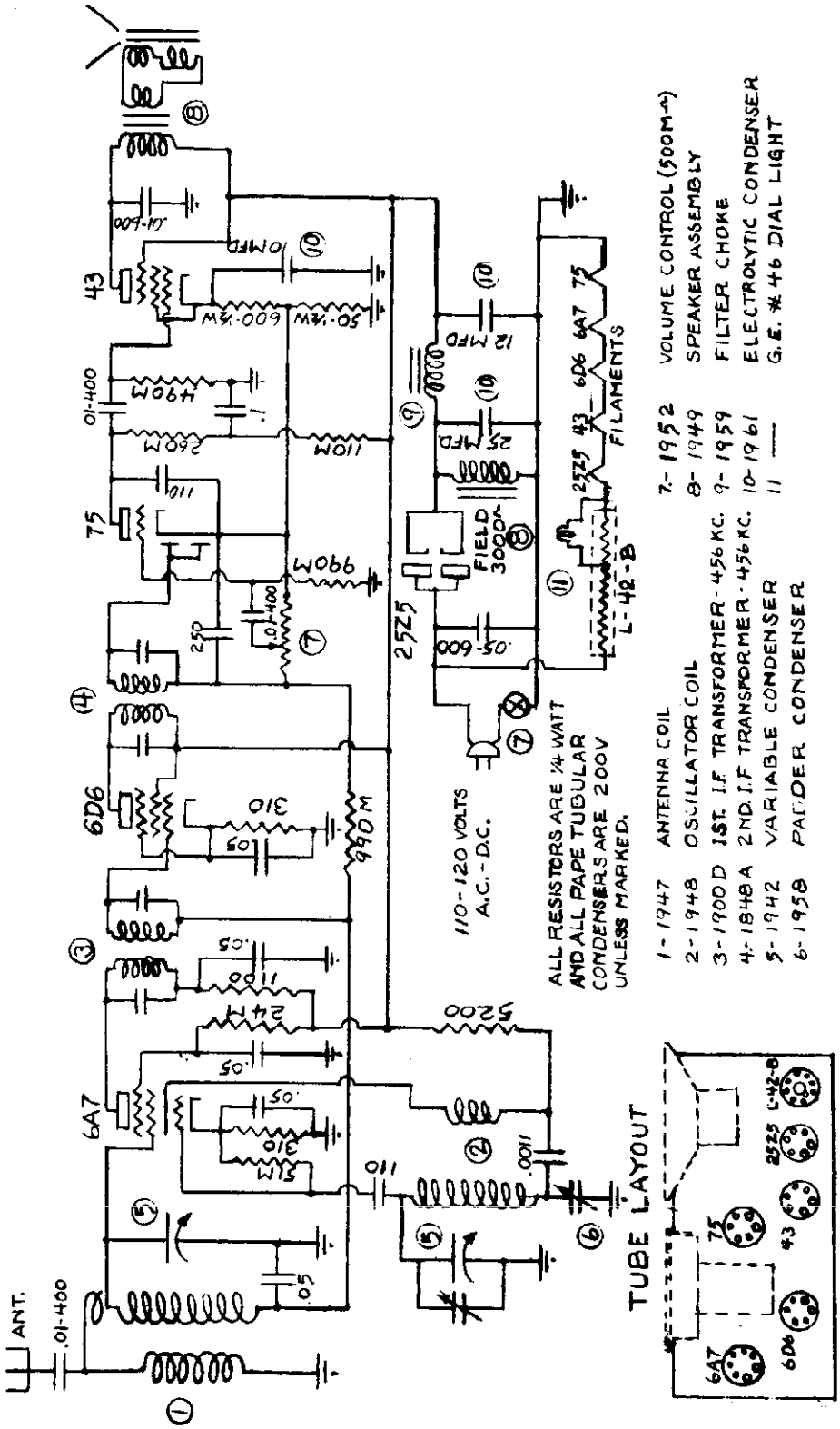

©John F. Rider, Publisher

MODEL 536
Schematic
Socket

HALSON RADIO MFG. CORP.

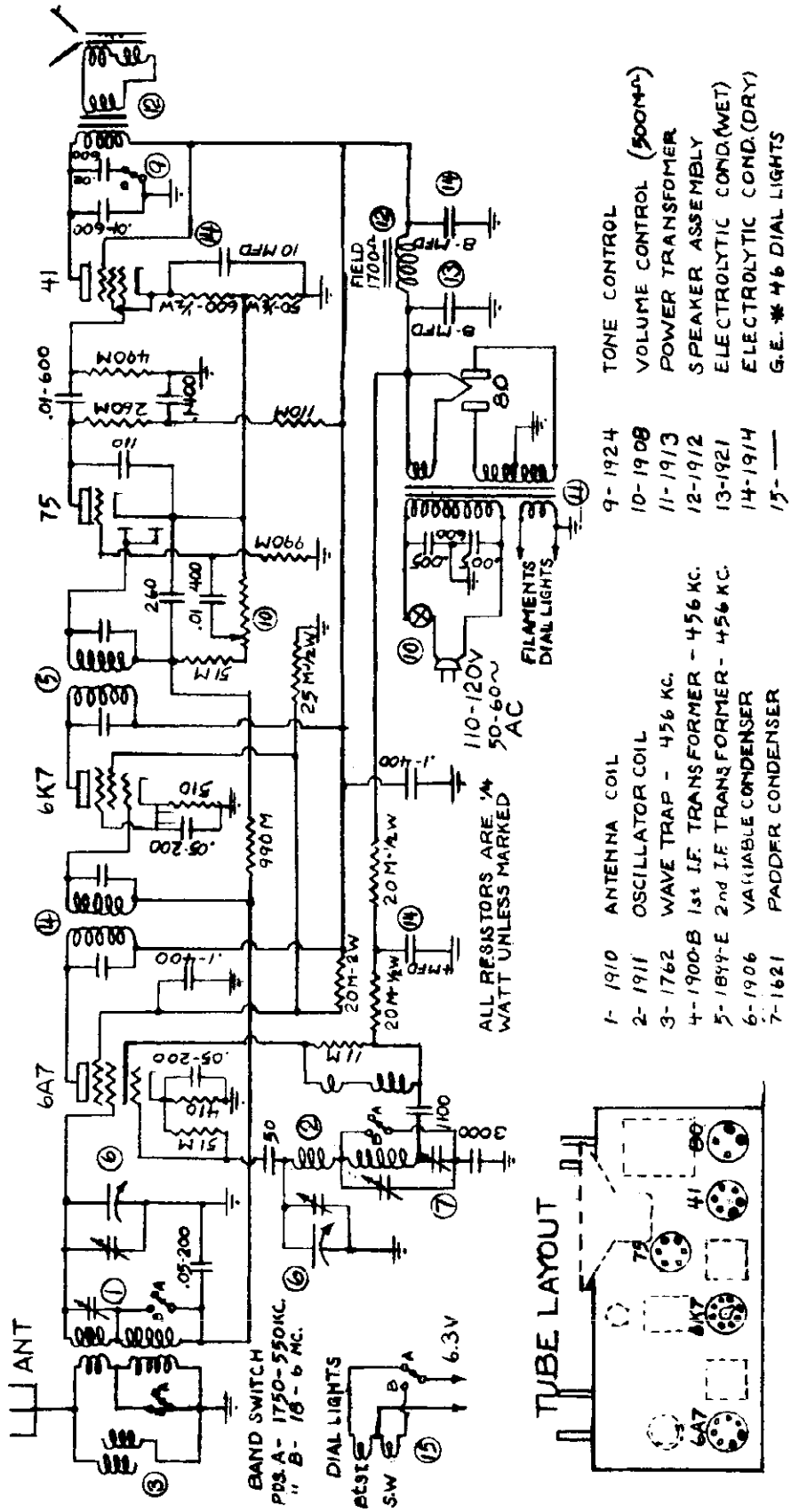

1- 1910	ANTENNA COIL	9- 1924	TONE CONTROL
2- 1911	OSCILLATOR COIL	10- 1908	VOLUME CONTROL (500M Ω)
3- 1762	WAVE TRAP - 456 KC.	11- 1913	POWER TRANSFOMER
4- 1900-B	1st I.F. TRANSFORMER - 456 KC.	12- 1912	SPEAKER ASSEMBLY
5- 1899-E	2nd I.F. TRANSFORMER - 456 KC.	13- 1921	ELECTROLYTIC COND.(WET)
6- 1906	VARIABLE CONDENSER	14- 1914	ELECTROLYTIC COND.(DRY)
7- 1621	PADDER CONDENSER	15- ——	G.E. #46 DIAL LIGHTS
8- 1909	WAVE CHANGE SWITCH		

HALSON
NUMBER
536

©John F. Rider, Publisher

SCHEMATIC DESIGNATION	DESCRIPTION - RECEIVER PARTS	PART NUMBER
A1	Antenna Input Coil Assembly 2.5 to 5.0 M.C.	SA 46
A2	Antenna Output Coil Assembly 2.5 to 5.0 M.C.	SA 46 A1
B1	Antenna Input Coil Assembly 5.0 to 10.0 M.C.	SA 47
B2	Antenna Output Coil Assembly 5.0 to 10.0 M.C.	SA 47 B1
C1	Antenna Input Coil Assembly 10.0 to 20.0 M.C.	SA 48
C2	Antenna Output Coil Assembly 10.0 to 20.0 M.C.	SA 48 C1
D1	Antenna Input Coil Assembly 1160 to 2500 K.C.	SA 49
D2	Antenna Output Coil Assembly 1160 to 2500 K.C.	SA 49 D1
E1	Antenna Input Coil Assembly 540 to 1160 K.C.	SA 50
E2	Antenna Output Coil Assembly 540 to 1160 K.C.	SA 50 E1
F	1st. R.F. Coil Assembly 2.5 to 5.0 M.C.	SA 46 A2
G	1st. R.F. Coil Assembly 5.0 to 10.0 M.C.	SA 47 B2
H	1st. R.F. Coil Assembly 10.0 to 20.0 M.C.	SA 48 C2
J	1st. R.F. Coil Assembly 1160 to 2500 K.C.	SA 49 D2
K	1st. R.F. Coil Assembly 540 to 1160 K.C.	SA 50 E2
L	2nd. R.F. Coil Assembly 2.5 to 5.0 M.C.	SA 46 A3
M	2nd. R.F. Coil Assembly 5.0 to 10.0 M.C.	SA 47 B3
N	2nd. R.F. Coil Assembly 10.0 to 20.0 M.C.	SA 48 C3
P	2nd. R.F. Coil Assembly 1160 to 2500 K.C.	SA 49 D3
R	2nd. R.F. Coil Assembly 540 to 1160 K.C.	SA 50 E3
S	High Frequency Osc. Coil Assembly 2.5 to 5.0 M.C.	SA 46 A4
T	High Frequency Osc. Coil Assembly 5.0 to 10.0 M.C.	SA 47 B4
W	High Frequency Osc. Coil Assembly 10.0 to 20.0 M.C.	SA 48 C4
X	High Frequency Osc. Coil Assembly 1160 to 2500 K.C.	SA 49 D4
Y	High Frequency Osc. Coil Assembly 540 to 1160 K.C.	SA 50 E4
AA	1st. I.F. Transformer Coil Assembly	SA 38
BB	2nd. I.F. Transformer Coil Assembly	SA 39
CC	3rd. I.F. Transformer Coil Assembly	SA 39
DD	2nd. Detector Input Coil Assembly	SA 40
EE	2nd. Detector Output Coil Assembly	SA 41

SCHEMATIC DESIGNATION	DESCRIPTION - RECEIVER PARTS	PART NUMBER
93	Int. Frequency Gain Control 50,000 Ohms	3891
94	Audio Frequency Gain Control 250,000 Ohms	3889
95	Tone Control 50,000 Ohms	3888
96	Send-Receive Switch	2988
97	A.V.C. Manual Switch	2990
98	Off-On Switch	2983
99	Speaker - Phone Switch	3890
100	C W - Mod Switch	2983
101	Tuning Meter	3894
*102	Output Jack	3892
103-104-107 108-109	Tube Socket 6D6	3821
105	Tube Socket 6A7	3822
106-116	Tube Socket 6C6	3823
110-115	Tube Socket 6B7	3824
111	Tube Socket 76	3825
112-113-114	Tube Socket 42	3826
117	Connecting Terminal Strip	3958
118	Phones Terminal Strip	3950
119	Speaker or Output Terminal Strip	3943
120	Phonograph Terminal Strip	3949
121-122	Pilot Light Mazda #40 6.3 Volts	3920
123	Antenna Terminal Strip	3942
MT4 MT1 MT2 MT3	Main Tuning Condensers	SA 6
BS 1-2-3-4	Band Spread Condensers	SA 7
SW 1-2-3-4-5	Band Change Switch	SA 2
* ———	Signal Corps Name Plate	3893

SCHEMATIC DESIGNATION	DESCRIPTION - MISCELLANEOUS PARTS	PART NUMBER
———	Speaker Voice Coil Connecting Cable	SA 65
———	Speaker Field Coil Connecting Cable	SA 66

©John F. Rider, Publisher

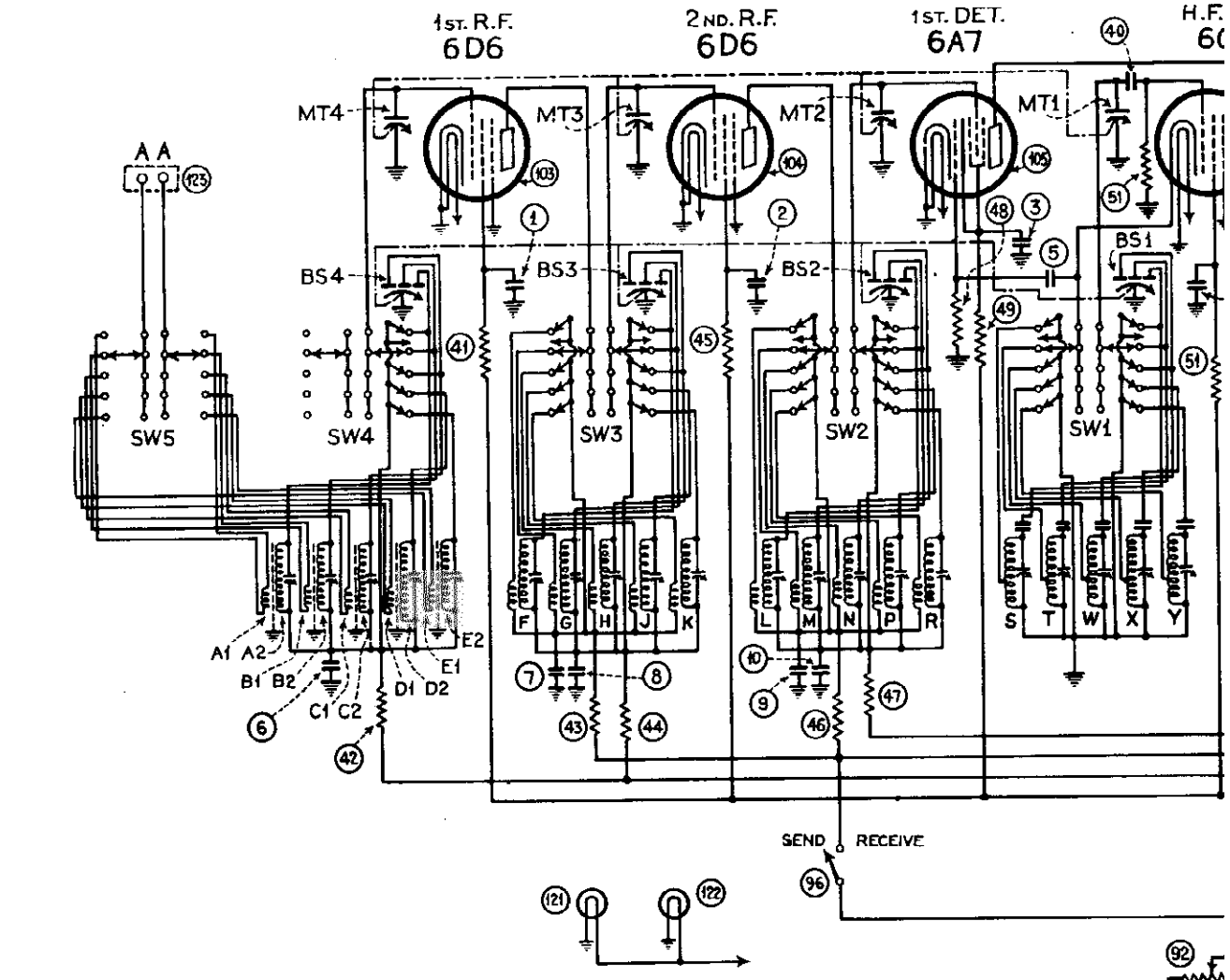

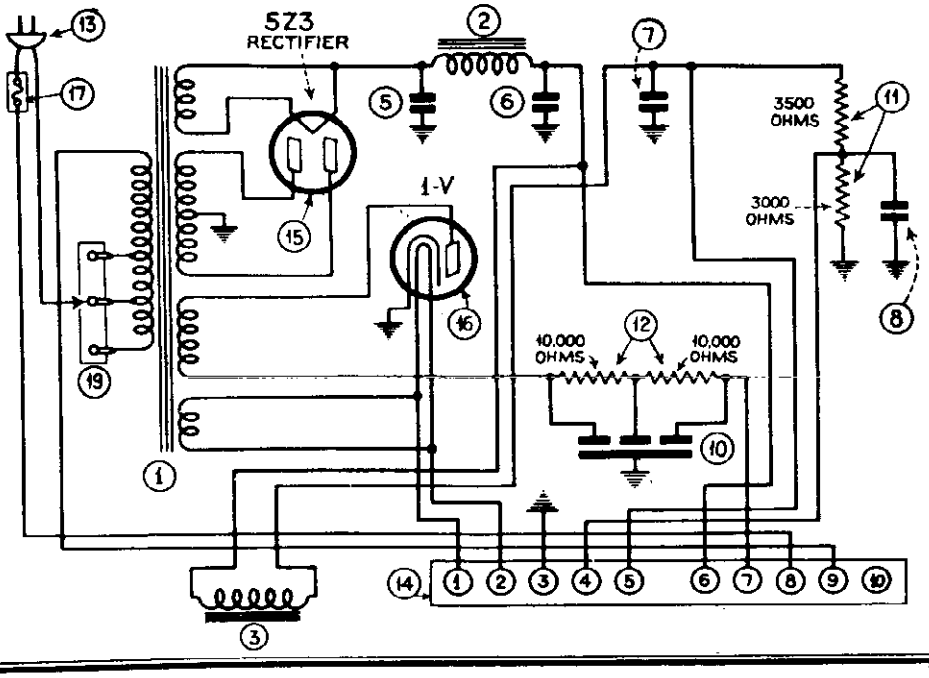

TABULATION OF VOL

TUBE	FUNCTION IN RECE
6-A-7	1ST DETECTOR
6-C-6	HIGH FREQ OSCILLA
6-B-6	1ST RADIO FREQ
6-D-6	2ND " "
6-D-6	1ST INTERMEDIATE
6-D-6	2ND "
6-D-6	3RD "
6-B-7	2ND DETECTOR
6-B-7	AUTOMATIC VOLUME C
6-C-6	BEAT OSCILLATOR
76	1ST AUDIO
42	DRIVER
42	CLASS A.B. AUDIO
42	" " "

VOLTAGES AT TERMINAL

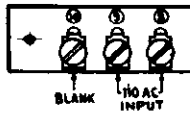

MFG. CO., INC.

MODEL Super Pro
Schematic, Voltage
Trimmers

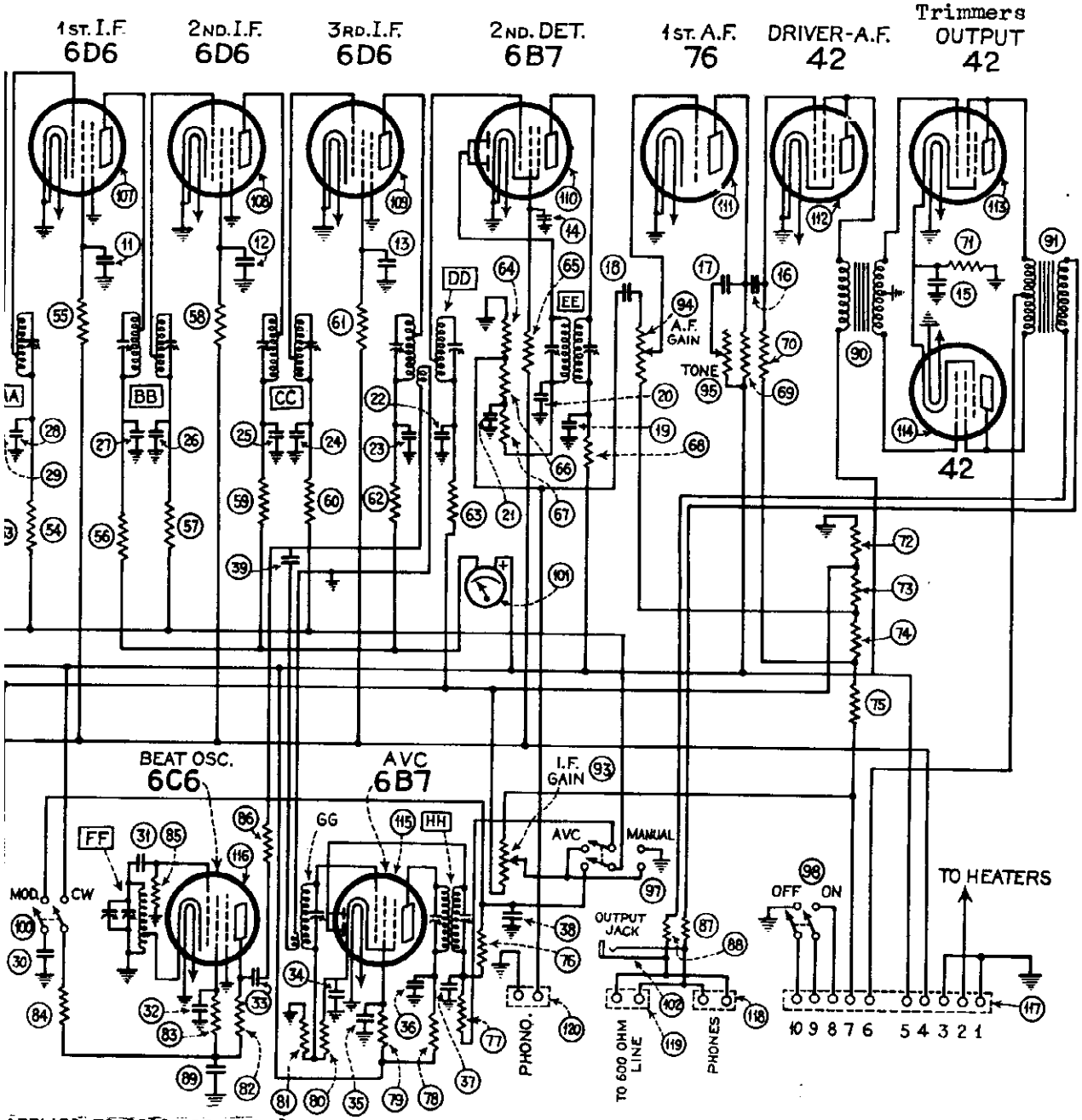

APPLIED TO RECEIVER TUBES

ATE TAGE	SCREEN VOLTAGE	CATHODE VOLTAGE	PLATE CURRENT MILLIAMPS
60	80	0	3.
75	110	0	2.5
75	110	0	1.5
75	110	0	1.5
75	110	0	2.
75	110	0	2.
75	110	0	2.
60	100	0	3.
30	145	45	7.
80	30	0	.4
75	0	0	2.5
60	260	0	23.
60	360	35	21.
60	360	35	21.

RECEIVER (LOOKING AT REAR OF CHASSIS)

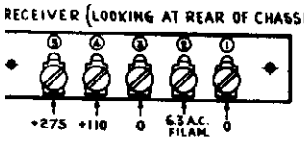

BOTTOM VIEW, MAIN TUNING UNIT, COVER PLATE IN PLACE, INDICATING H.F. OSCILLATOR AND R.F. COIL ADJUSTMENTS

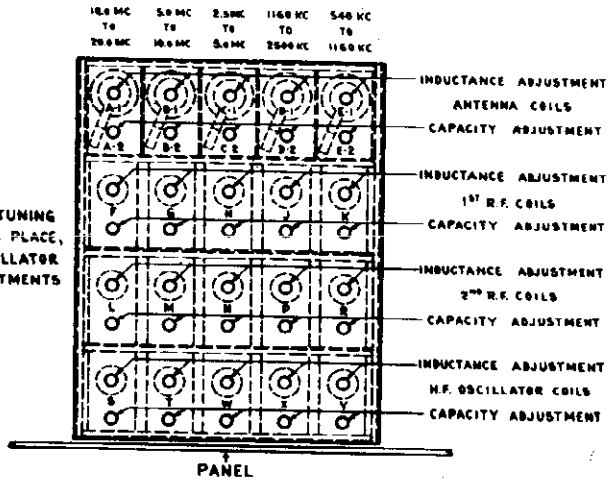

SCHEMATIC DESIGNATION	DESCRIPTION - RECEIVER PARTS	PART NUMBER
A1	Antenna Input Coil Assembly 2.5 to 5.0 M.C.	SA 46
A2	Antenna Output Coil Assembly 2.5 to 5.0 M.C.	SA 46 A1
B1	Antenna Input Coil Assembly 5.0 to 10.0 M.C.	SA 47
B2	Antenna Output Coil Assembly 5.0 to 10.0 M.C.	SA 47 B1
C1	Antenna Input Coil Assembly 10.0 to 20.0 M.C.	SA 48
C2	Antenna Output Coil Assembly 10.0 to 20.0 M.C.	SA 48 C1
D1	Antenna Input Coil Assembly 1160 to 2500 K.C.	SA 49
D2	Antenna Output Coil Assembly 1160 to 2500 K.C.	SA 49 D1
E1	Antenna Input Coil Assembly 540 to 1160 K.C.	SA 50
E2	Antenna Output Coil Assembly 540 to 1160 K.C.	SA 50 E1
F	1st. R.F. Coil Assembly 2.5 to 5.0 M.C.	SA 46 A2
G	1st. R.F. Coil Assembly 5.0 to 10.0 M.C.	SA 47 B2
H	1st. R.F. Coil Assembly 10.0 to 20.0 M.C.	SA 48 C2
J	1st. R.F. Coil Assembly 1160 to 2500 K.C.	SA 49 D2
K	1st. R.F. Coil Assembly 540 to 1160 K.C.	SA 50 E2
L	2nd. R.F. Coil Assembly 2.5 to 5.0 M.C.	SA 46 A3
M	2nd. R.F. Coil Assembly 5.0 to 10.0 M.C.	SA 47 B3
N	2nd. R.F. Coil Assembly 10.0 to 20.0 M.C.	SA 48 C3
P	2nd. R.F. Coil Assembly 1160 to 2500 K.C.	SA 49 D3
R	2nd. R.F. Coil Assembly 540 to 1160 K.C.	SA 50 E3
S	High Frequency Osc. Coil Assembly 2.5 to 5.0 M.C.	SA 46 A4
T	High Frequency Osc. Coil Assembly 5.0 to 10.0 M.C.	SA 47 B4
W	High Frequency Osc. Coil Assembly 10.0 to 20.0 M.C.	SA 48 C4
X	High Frequency Osc. Coil Assembly 1160 to 2500 K.C.	SA 49 D4
Y	High Frequency Osc. Coil Assembly 540 to 1160 K.C.	SA 50 E4
AA	1st. I.F. Transformer Coil Assembly	SA 38
BB	2nd. I.F. Transformer Coil Assembly	SA 39
CC	3rd. I.F. Transformer Coil Assembly	SA 39
DD	2nd. Detector Input Coil Assembly	SA 40

SCHEMATIC DESIGNATION	DESCRIPTION - RECEIVER PARTS	PART NUMBER
93	Int. Frequency Gain Control 50,000 Ohms	3891
94	Audio Frequency Gain Control 250,000 Ohms	3889
95	Tone Control 50,000 Ohms	3888
96	Send-Receive Switch	2988
97	A.V.C. Manual Switch	2990
98	Off-On Switch	2983
99	Speaker - Phone Switch	2990
100	C W - Mod Switch	2983
101	Tuning Meter	3894
*102	Output Jack	3892
103-104-107 108-109	Tube Socket 6D6	3821
105	Tube Socket 6A7	3822
106-116	Tube Socket 6C6	3823
110-115	Tube Socket 6B7	3824
111	Tube Socket 76	3825
112-113-114	Tube Socket 42	3826
117	Connecting Terminal Strip	3838
118	Phones Terminal Strip	3850
119	Speaker or Output Terminal Strip	3843
120	Phonograph Terminal Strip	3849
121-122	Pilot Light Mazda #40 6.3. Volts	3920
123	Antenna Terminal Strip	3842
MT4 MT1 MT2 MT3	Main Tuning Condensers	SA 6
BS 1-2-3-4	Band Spread Condensers	SA 7
SW 1-2-3-4-5	Band Change Switch	SA 2
* ———	Signal Corps Name Plate	3893

SCHEMATIC DESIGNATION	DESCRIPTION - MISCELLANEOUS PARTS	PART NUMBER
———	Speaker Voice Coil Connecting Cable	SA 65
———	Speaker Field Coil Connecting Cable	SA 66

© John F. Rider, Publisher

HAMMARLUND MFG. CO., INC.

MODEL Super Pro
Alignment, Part 1

VOLTAGES :-

ALL MEASUREMENTS WERE MADE ON A 120 VOLT A.C. POWER SUPPLY LINE WITH LINE VOLTAGE ADJUSTMENT SET AT THE 125 VOLT TAP. R.F.-I.F. AND AUDIO GAIN CONTROLS SHOULD BE SET AT MINIMUM. THE A.V.C. MANUAL SWITCH SHOULD BE IN THE MANUAL POSITION, THE CW-MOD SWITCH IN THE C.W. POSITION, AND THE "SEND-RECEIVE" SWITCH IN THE RECEIVE POSITION. D.C. VOLTAGE READINGS WERE OBTAINED WITH A VOLTMETER HAVING A RESISTANCE OF 1000 OHMS PER VOLT USING THE CHASSIS AS A COMMON TERMINAL. VOLTAGES WITHIN ±10% OF THE VALUES GIVEN SHOULD BE CONSIDERED SATISFACTORY. THE 6.3 VOLT A.C. FILAMENT READING IS OBTAINED BETWEEN CHASSIS AND TERMINAL Nº 2 ON STRIP. TERMINAL Nº 10 ON STRIP IS BLANK EXCEPT WHEN USED FOR BATTERY OPERATION IN WHICH CASE IT PROVIDES A SHORT TO CHASSIS WITH POWER SWITCH IN "ON" POSITION AND OPEN WHEN POWER SWITCH IS IN THE "OFF" POSITION.

1 – TEST OSCILLATOR – An accurately calibrated instrument producing modulated signals covering a range of 465 K.C. to 20 M.C. This test oscillator should have an output of the order of 100 micro-volts and an output impedance of 100 Ohms for best results when aligning the R.F. and H.F. Oscillator circuits. For I.F. alignment these values are not critical. The frequency calibration of the test oscillator is extremely important, if the receiver alignment is to be correct.

2 – OUTPUT METER – This meter should respond to the modulation frequency of the test oscillator and should provide at least half-scale deflection for one volt.

3 – INSULATED SCREW DRIVER (9/64" wide – .025" thick at bit)

PRELIMINARY PROCEDURE

Place the "ON-OFF" switch in the "ON" position and allow the receiver to warm up approximately one hour before beginning adjustments. Turn the knurled thumb nuts located on the tops of coil assemblies D.D.-E.E. and H.H. until the tops of the thumb nuts are flush with the tops of the threaded rods. Connect the output meter to the "PHONES" terminals located at the rear of the receiver chassis.

I.F. - A.V.C. - BEAT OSC. ALIGNMENT

Adjust the test oscillator to 465 K.C. and connect the output to the control grid of the 1st Detector tube (6A7) through a fixed condenser. Front panel controls should be set as follows:

R.F. Gain Control MINIMUM (turn full left)
I.F. Gain Control MINIMUM (turn full left)
A.V.C. – MANUAL switch on "MANUAL"
C.W. – M.O.D. – switch on "MOD"
PHONES – SPEAKER Switch on "PHONES"
SEND-RECEIVE Switch on "RECEIVE"
BAND SWITCH on 540-1160 K.C.
AUDIO GAIN CONTROL MAXIMUM (turn full right)
TONE CONTROL (turn full left)
SELECTIVITY (turn full left)
BAND SPREAD DIAL set on 100

MAIN TUNING DIAL set near low frequency end of scale, being careful not to conflict with a powerful local signal. Adjust the I.F. gain control so that a reading of approximately one volt is obtained on the output meter. As the various circuits are adjusted for resonance reduce the I.F. gain control to prevent overloading. Adjust the two trimmer capacitors in each of the following coil assemblies for peak voltage readings on the output meter – A.A. – B.B. – C.C. – D.D. – E.E. Then adjust the trimmer capacitor on coil assembly G.G. to minimum (dip) reading on the output meter. Now reduce the A.F. gain to nearly zero and throw the A.V.C. switch to A.V.C. Then adjust the I.F. gain Control until the panel meter reads between 2 and 3. Then adjust the capacitors on H.H. for minimum panel meter reading. There should be a pronounced dip of the panel meter as each of these adjustments is made. It is advisable to switch over to "SPEAKER" at frequent intervals during alignment to make sure there is no overloading. If everything is operating properly the output meter reading will also dip to minimum as the capacitors on coil assembly H.H. are adjusted.

Set the A.V.C.-MANUAL Switch on MANUAL, the C.W.-MOD-switch on C.W. and adjust the trimmer capacitors on coil assembly F.F. for zero beat. For this adjustment the Beat oscillator control knob, on the front panel should be adjusted half-way, or with the stop pin on shaft vertical or pointing upwards. This completes the alignment of the I.F. – A.V.C. and Beat Oscillator circuits all of which are accessible on top of the receiver chassis. After these adjustments have been made, the entire procedure should be repeated to insure accuracy. The knurled thumb nuts on coil assemblies D.D. – E.E. and H.H. should now be returned to their original settings by turning them to the right until the tops of the thumb nuts are 7/16" below the tops of the threaded rods.

CRYSTAL FILTER I.F. ALIGNMENT

The above procedure for aligning the I.F. circuit also applies to receivers with crystal filters, except that the test oscillator must be accurately set to the frequency of the crystal. This can be accomplished by setting the frequency of the test oscillator (when connected to the grid of the first detector) for maximum response with the crystal in circuit and the crystal selectivity control set at maximum. When the frequency of the test oscillator has been correctly adjusted to that of the crystal the I.F. circuits can be tuned as described above with the crystal cut out of circuit. Unless this procedure is carefully carried out, maximum crystal efficiency will not be obtained, since the peak of the I.F. selectivity curve must coincide exactly with the resonant peak of the crystal.

H.F. OSCILLATOR AND R.F. ALIGNMENT

Connect the output of the test oscillator to the "A.A." terminal strip. Keep the output meter in the same position as previous test. The controls on the front panel should be set as follows:

Band Change Switch on 540 – 1160 K.C.
Main Tuning Dial on 1100 K.C.
Band spread Dial on 100
R.F. Gain Control "Full On"
I.F. Gain Control "To Produce appropriate output meter reading"
Audio Gain Control "Full On"
Tone Control "Turn Full left"
C.W. – MOD switch on "MOD"
A.V.C.-MANUAL Switch on "MANUAL"
SEND – RECEIVE Switch on "RECEIVE"
PHONES-SPEAKER Switch on "PHONES"

Turn the receiver over, bottom side up, placing a small block of wood under the rear of the switch section to protect the shield cans and tubes. The main tuning unit bottom plate should remain in place while H.F. oscillator and R.F. adjustments are being made. In order to facilitate the alignment of these stages, we have indicated in dotted lines, the coil positions beneath the bottom cover plate, together with all capacity and inductance adjusters. Capacity adjusting condensers are located on the coil bases and inductance adjusters extend through the top of each coil. The coil markings correspond to the designations on the schematic wiring diagram. Set the test oscillator to produce a 1100 K.C. signal. Adjust the trimmer capacitor "Y" until a peak reading is obtained in the output meter. Now set the main tuning condenser dial to 600 K.C. and adjust the test oscillator for a 600 K.C. signal. Turn the inductance adjustment on coil "Y" for a peak reading on the output meter. As these two adjustments react on each other it will be necessary to repeat them until no further change in either capacity or inductance is necessary. This realignment should only be done after making sure that the calibration of main dial is incorrect.

Turn the main tuning dial to 1100 K.C. and set the test oscillator for 1100 K.C. signal. Adjust each capacitor on coil "R" – "K" – "Z2" in

©John F. Rider, Publisher

the order named, for peak reading on the output meter. The I.F. gain control should be adjusted so that no overloading occurs and an appropriate reading on the output meter is maintained. Now set the main tuning dial at 600 K.C. and the test oscillator on the same frequency and turn the "inductance adjustments" on coil "R" - "K" - "E1" for peak reading on the output meter. These adjustments are also interlocking and should be repeated until no further improvement can be noticed. This completes the H.F. Oscillator and R.F. coil alignment for the frequency range of 540 to 1160 K.C.

The alignment procedure of the H.F. Oscillator and R.F. coils in the remaining frequency ranges is exactly the same as outlined for the 540-1160 K.C. band, test oscillator frequencies and main tuning dial settings vary as follows:

RANGE	CAPACITY ADJUSTING FREQUENCY	COILS	INDUCTANCE ADJUSTING FREQUENCY	COILS
1160 to 2500 K.C.	2500 K.C.	X-P-J-D2	1200 K.C.	X-P-J-D1
2.5 to 5.0 MC	5.0 MC	W-N-H-C2	2.5 MC	W-N-H-C1
5.0 to 10.0 MC	10.0 MC	T-M-G-B2	5.0 MC	T-M-G-B1
10.0 to 20.0 MC	20.0 MC	S-L-F-A2	10.0 MC	S-L-F-A1

The capacity and inductance adjustments in each band should be rechecked until no further peak changes are noted. The receiver will then be completely aligned. On the three highest frequency bands, care should be exercised to avoid adjusting the H.F. oscillator coils to an image frequency.

The check on the alignment of the receiver on all bands is now complete and if instructions have been carefully carried out optimum performance should be obtained.

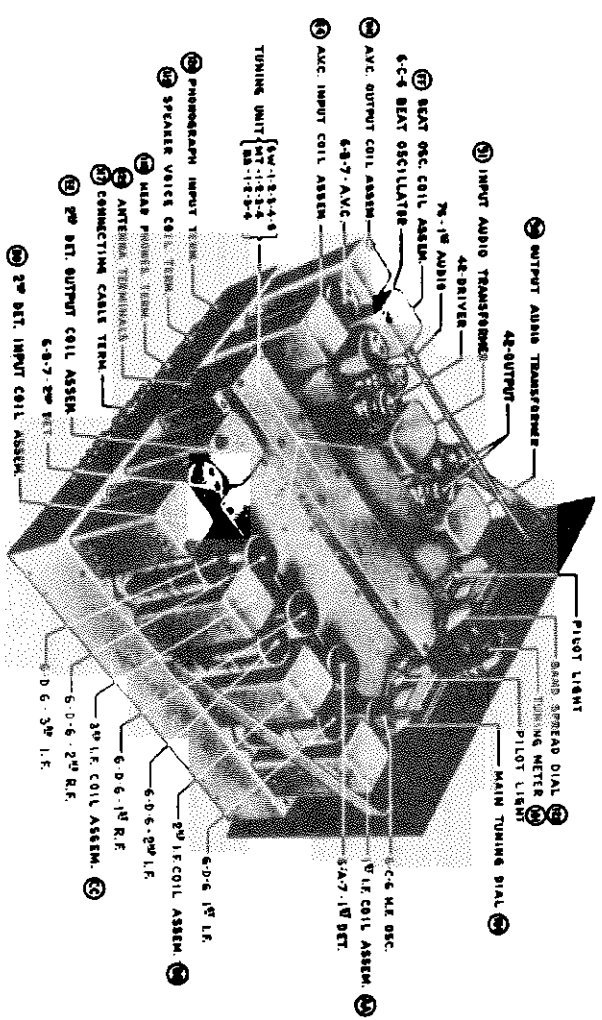

HAMMARLUND MFG. CO., INC.

MODEL Super Pr
Circuit Data
Operating Note

OPERATING THE RECEIVER

The receiver may now be operated by tuning the OFF-ON SWITCH.

The receiver is equipped with every conceivable control to permit the operator to obtain maximum performance under a wide variety of receiving conditions. The numerous control knobs and switches appearing on the panel, may, at first glance, seem confusing, but in reality their actual manipulation is quite simple and after the receiver has been used for a very short time, no difficulty will be experienced in obtaining the most efficient results.

An AVC-MANUAL switch is provided to enable the operator to use either AVC or MANUAL volume control. For stations transmitting a continuous carrier such as a telephone station, the AVC position is generally the best. In this case, the manual I.F. gain control serves to limit the maximum sensitivity and prevents the high noise level present when the receiver is adjusted to maximum gain with no incoming signal. When the switch is set on MANUAL, the I.F. GAIN control adjusts the gain of the receiver to a given point, which remains fixed regardless of the intensity of the signal being received. When AVC is used a minimum reading on the TUNING METER indicates the signal has been tuned in properly.

The BEAT OSCILLATOR adjustment is brought out on the panel and may be adjusted to give any beat note frequency desired. For C.W. reception, be sure that the signal is tuned to its maximum strength, and then adjust the beat oscillator to the desired frequency.

DO NOT CHANGE THE TUNING TO PRODUCE THE DESIRED BEAT FREQUENCY. The only time the tuning is adjusted to change the beat frequency is after the station is properly tuned in, and has drifted in frequency so as to change the tuning as well as the beat note.

The BEAT OSCILLATOR may also be used for locating the carrier of distant broadcast or phone signals by tuning to the lowest pitch beat note (Zero Beat) with the CW-MOD. switch in the CW position. For this purpose the BEAT OSCILLATOR control should be adjusted in the centre.

A SEND RECEIVE switch is placed on the panel and is used when transmitting on approximately the same frequency as that to which the receiver is tuned. This switch disconnects the plate supply to the R.F. amplifiers and first detector. With this switch in the send position, it is usually possible to use the receiver to monitor the transmissions, although in low powered transmitters it may be necessary to keep this switch in the receive position and reduce the R.F. GAIN, as the shielding and filtering in the receiver is sufficient to keep out any except extremely strong signals from a transmitter located a few feet away.

The frequency band desired for operation may be selected by means of the BAND CHANGE SWITCH located directly beneath the tuning meter. The main tuning dial shutter will at the same time automatically indicate the frequency band in use. The calibration of the MAIN DIAL is correct only when the BAND SPREAD DIAL is set at 100, except in the two low-frequency ranges from 540 to 2500 K.C. In these two ranges the BAND SPREAD CONDENSER is automatically disconnected by the BAND CHANGE SWITCH. Therefore, with the BAND SPREAD DIAL set at 100, the receiver is a fully calibrated SINGLE DIAL instrument.

In the three high frequency bands tuning is sufficiently smooth on the main dial to permit its use almost entirely for selecting the desired signal and perhaps it would be more simple to disregard the band spread dial until the desired signal is picked up, and then use the band spread dial for the purpose of obtaining a very fine vernier adjustment.

If band spread operation is desired in any of the three high frequency bands, the MAIN TUNING DIAL should be adjusted to the HIGH FREQUENCY limit of the band desired. It will then be possible to tune down over the band by means of the band spread dial only, thereby permitting extremely fine tuning. Lower BAND SPREAD DIAL settings indicate lower frequencies.

THE BAND SPREAD DIAL is not used on the two lowest frequency bands, as the tuning is sufficiently fine on the main tuning dial.

GAIN ADJUSTMENTS:

The R.F. GAIN CONTROL will generally be at maximum, unless the signal being received is very strong, and causes overloading of the first detector. This overloading will be made apparent by a considerable amount of distortion. In this case, reduce the R.F. GAIN. This overloading will rarely be present on the high frequency bands, where the maximum R.F. gain is generally desired.

The AUDIO GAIN should be operated at or near its maximum setting, except when using A.V.C. The AUDIO GAIN should be full on at all times when the receiver is being used for C.W. reception except when using A.V.C. and the proper signal level obtained by the manipulation of the I.F. gain.

In C.W. reception, it will sometimes be found advantageous to reduce the R.F. GAIN when there is interference from a strong station operating very close to the desired signal.

The SELECTIVITY adjustment may be set at any desired point, depending upon conditions. For C.W. reception, it is usually desirable to adjust for maximum selectivity. It should be borne in mind at all times that the atmospheric disturbances and other noises of that character will vary in direct proportion to the width of the response curve of the receiver.

If the receiver becomes completely inoperative, it may be due to a shorted filter or by-pass condenser or an open resistor. By measuring voltages and comparing them with the tabulations in the chart, the defective parts can be easily determined. We do not believe that detailed continuity tests should be described since most operators are familiar with the ordinary procedure for determining defective component parts. In both receiver and power supply units, the bottom cover plates may be removed so that all parts are accessible. Values of any resistor or capacitor may be obtained by locating the number on the schematic wiring diagram, and referring to the parts list.

GENERAL DESCRIPTION

The receiver consists of two major units — the receiver proper and the power supply unit. Both units are supplied with dust covers and suitable for rack or table mounting.

The main tuning unit houses the MAIN TUNING and BAND SPREAD condensers and their respective dial assemblies — the BAND CHANGE SWITCH — and all ANTENNA COUPLING — R.F. and H.F. OSCILLATOR coil assemblies. The BAND CHANGE switch, an exclusive Hammarlund development, embodies the well known knife switch principle and is located in the center of the unit. In the development of this switch, which presents a radical departure from switches commonly used for band changing, considerable thought was given to efficient operation over long periods of active use, and the elimination of faulty switch contacts, which would affect the sensitivity and selectivity of the receiver. All contacts are silver plated phosphor bronze so constructed that a six point contact is provided at each connection. This switch covers the range of 20 mc. to 540 kc. in 5 bands, and also connects the proper band spread condensers into each of the 3 high frequency circuits, and short circuits all coils not actually in use. When the switch is turned the next contact is made before the previous one is broken, thereby eliminating sparking. The switch dial may be turned in either direction, a very convenient feature.

The MAIN TUNING and BAND SPREAD condenser assemblies are located on the left and right hand side respectively of the BAND CHANGE SWITCH when facing the panel. Each tuning gang is controlled by a single control and dial located on the front panel. They are rigidly constructed and so designed that they will not get out of alignment during normal operation.

The MAIN TUNING and BAND SPREAD DIALS are plainly readable through well illuminated escutcheons. Both dials have an easy vernier tuning action without backlash. The main tuning dial is directly calibrated in megacycles in ranges of 2.5 to 5.0; 5.0 to 10.0; 10.0 to 20.0; and in kilocycles from 1160 to 2500 and 540 to 1160. The MAIN TUNING DIAL is equipped with an ingenious mechanical shutter which operates in synchrony with the BAND CHANGE SWITCH, so that only the frequency band in actual use is visible to the operator.

The POWER SUPPLY unit contains a properly filtered rectifier for furnishing D.C. plate voltages and A.C. filament voltage for operating the receiver. A separate rectifier is incorporated for supplying grid bias. All component parts are designed to have a high safety factor. A three terminal strip is located beneath the chassis to permit operation on power supply lines of 105 - 115 - 125 volts, 50-60 cycle alternating current. A cord and plug is provided for connecting the power unit to a wall outlet or receptacle. A connecting cable is furnished for connecting the receiver and power supply units. A special cable for emergency battery operation is also provided.

CONNECTING RECEIVER

The receiver is so designed that it may be located in any convenient position, as a table model or in a standard 19" telephone relay rack. Dust covers may be removed for the insertion of tubes by removing the thumb nuts on both receiver and power supply units.

Tubes:- The receiver has been designed and tested for the following R.C.A. tubes or their equivalent:-

5 - 6D6		
2 - 6C6		
1 - 6A7		Receiver
2 - 6B7		
1 - 76		
3 - 42		
1 - 5Z3		
1 - 1-V		Power supply

Care should be taken that the proper tube is inserted in each socket. The type numbers on the tubes should correspond with the markings on the sockets. After the tubes have been correctly inserted the dust covers may be replaced.

The receiver may now be placed in the location previously decided upon and the antenna connections made. The antenna input has been designed to couple either to a balanced transmission line having an impedance of approximately 300 ohms, or to a conventional single wire antenna and ground. In the former case both feeders should be connected to the two antenna terminals located at the rear of the receiver marked "A-A". If a single wire type of antenna is used the lead-in should be connected to one of the terminals marked "A" and the other "A" terminal connected to a good ground. It is not essential to ground the receiver chassis, but it may readily be accomplished by inserting a ground lead under one of the thumb screws holding the dust cover in place at the rear of the receiver.

The RECEIVER and POWER SUPPLY units are connected by a cable. The spade lugs on the terminal strips at each end of the cable should be inserted in the corresponding terminals of the receiver and power supply, with the spade lugs pointing downward.

The output connections to the receiver may be made to the terminals marked "SPEAKER" on the rear of the receiver chassis, or to the pin jacks marked "PHONES". The output of the receiver has been designed to match a load impedence of approximately 600 ohms. A PHONE JACK is provided on the front panel of the receiver connected in parallel to the 600 ohm output terminals.

With the OFF-ON SWITCH in the OFF position, plug the power supply cord in the 60 cycle alternating current supply line. DO NOT ATTEMPT TO OPERATE ON DIRECT CURRENT — OR ALTERNATING CURRENT OTHER THAN 50-60 CYCLES OF THE PROPER VOLTAGE, unless the power supply unit is marked for 25-40 cycle A.C. operation.

An extra connecting cord is supplied with each receiver for emergency battery operation. One end of this cord has a terminal strip that connects to the receiver and the other end has color co wires for battery connections. The following batteries are requi for emergency operation:-

5 - 45 volt "B" batteries
1 - 45 volt "C" battery
1 - 6 volt "A" storage battery.

©John F. Rider, Publisher

HETRO ELECTRICAL INDUSTRIES

MODELS F-9 to F-21 incl.
Series FA
Schematic

CONDENSERS

C1 = 100 mmf mica
C2 = .05 mfd 200 volt
C3 = .02 mfd 400 volt
C4 = .05 mfd 200 volt
C5 = .05 mfd 200 volt
C6 = .05 mfd 200 volt
C7 = 250 mmf mica
C8 = .02 mfd 400 volt
C9 = .25 mfd 200 volt
C10 = 250 mmf mica
C11 = .02 mfd 400 volt
C12 = .05 mfd 200 volt
C13 = .01 mfd 400 volt
C14 = .01 mfd 400 volt
C15 = .16 mfd 150 volt electrolytic
C16 = .24 mfd 150 volt electrolytic
C17 = .1 mfd 400 volt

RESISTANCES

R1 = 50,000 ohm 1/3 Watt
R2 = 300 ohm 1/3 Watt
R3 = 10,000 ohm 1/3 Watt
R4 = 300 ohm 1/3 Watt
R5 = 25,000 ohm 1/3 Watt
R6 = 1 megohm 1/3 Watt
R9 = 500,000 ohm volume control
R10 = 500,000 ohm 1/3 Watt
R11 = 15,000 ohm 1/3 Watt
R12 = 250,000 ohm 1/3 Watt
R13 = 250,000 ohm 1/3 Watt
R14 = 250,000 ohm 1/3 Watt

1 - 140-410 KC Ant. Coil
2 - 550-1700 KC Ant. Coil
3 - 5.5-18 MC Ant. Coil
4 - 140-410 KC Osc. Coil
5 - 550-1700 KC Osc. Coil
6 - 5.5-18 MC Osc. Coil

L1 and L4 used only on models covering long wave band.

MODELS F-13 to F-20 incl.

HETRO ELECTRICAL INDUSTRIES

Series FA
Schematic

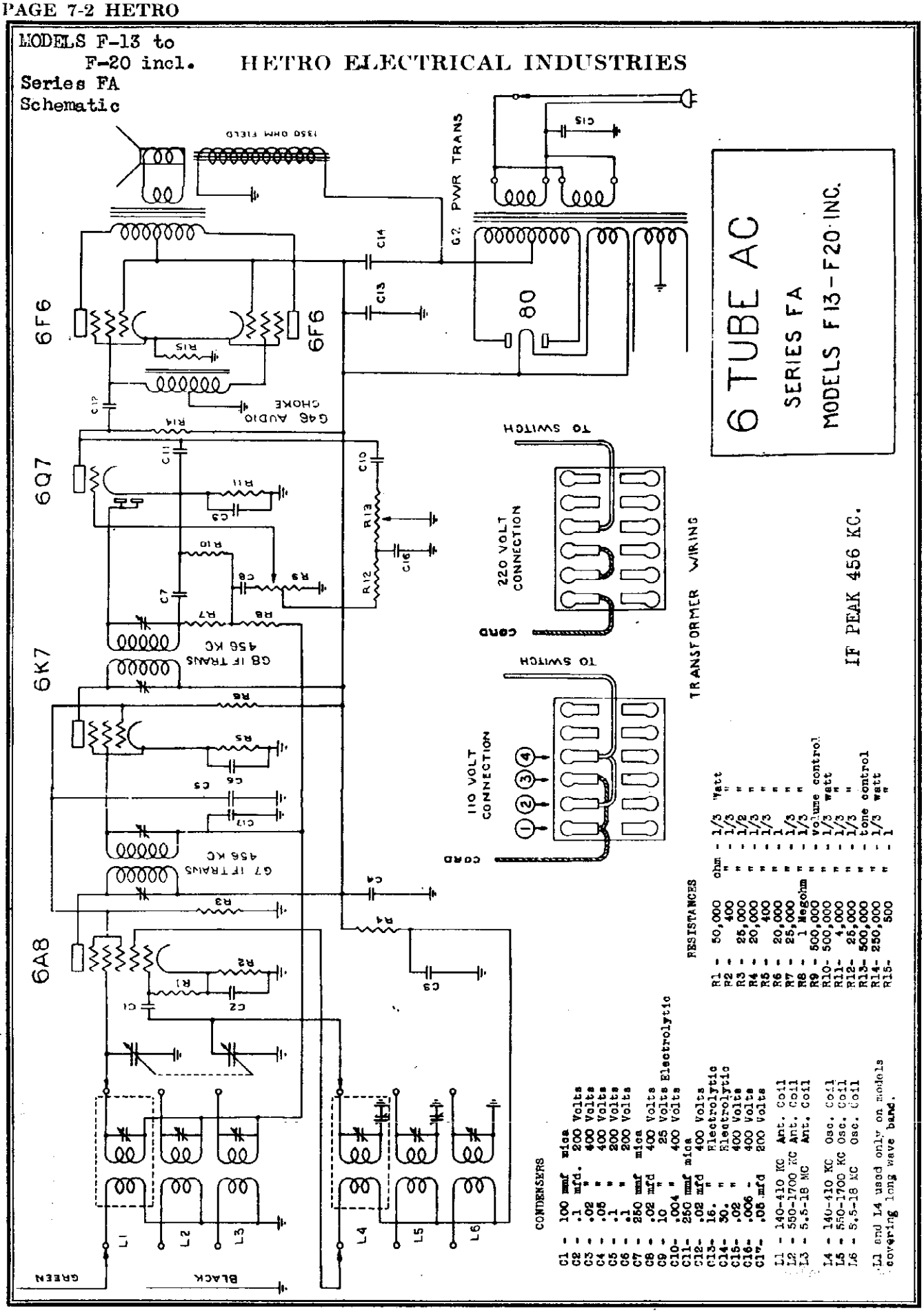

CONDENSERS

C1 - 100 mmf mica
C2 - .1 mfd. 200 Volts
C3 - .02 " 400 Volts
C4 - .05 " 400 Volts
C5 - .1 " 200 Volts
C6 - .1 " 200 Volts
C7 - 250 mmf mica
C8 - .02 mfd 400 Volts
C9 - 10 " " 25 Volts Electrolytic
C10- .004 " 400 Volts
C11- 250 mmf mica
C12- .02 mfd 400 Volts
C13- 16. " Electrolytic
C14- 30. " Electrolytic
C15- .02 " 400 Volts
C16- .006 " 400 Volts
C17- .05 mfd 200 Volts

L1 - 140-410 KC Ant. Coil
L2 - 550-1700 KC Ant. Coil
L3 - 5.5-18 MC Ant. Coil

L4 - 140-410 KC Osc. Coil
L5 - 550-1700 KC Osc. Coil
L6 - 5.5-18 MC Osc. Coil

L1 and L4 used only on models covering long wave band.

RESISTANCES

R1 - 50,000 ohm - 1/3 Watt
R2 - 400 " - 1/3 "
R3 - 25,000 " - 1/2 "
R4 - 20,000 " - 1/3 "
R5 - 400 " - 1/3 "
R6 - 20,000 " - 1 "
R7 - 25,000 " - 1/3 "
R8 - 1 Megohm " - 1/3 "
R9 - 500,000 " - volume control
R10- 500,000 " - 1/3 watt
R11- 4,000 " - 1/3 "
R12- 25,000 " - 1/3 "
R13- 500,000 " - tone control
R14- 250,000 " - 1/3 watt
R15- 500 " - 1 "

©John F. Rider, Publisher

HETRO ELECTRICAL INDUSTRIES

MODELS F-21 to F-28 incl
Series FA
Schematic

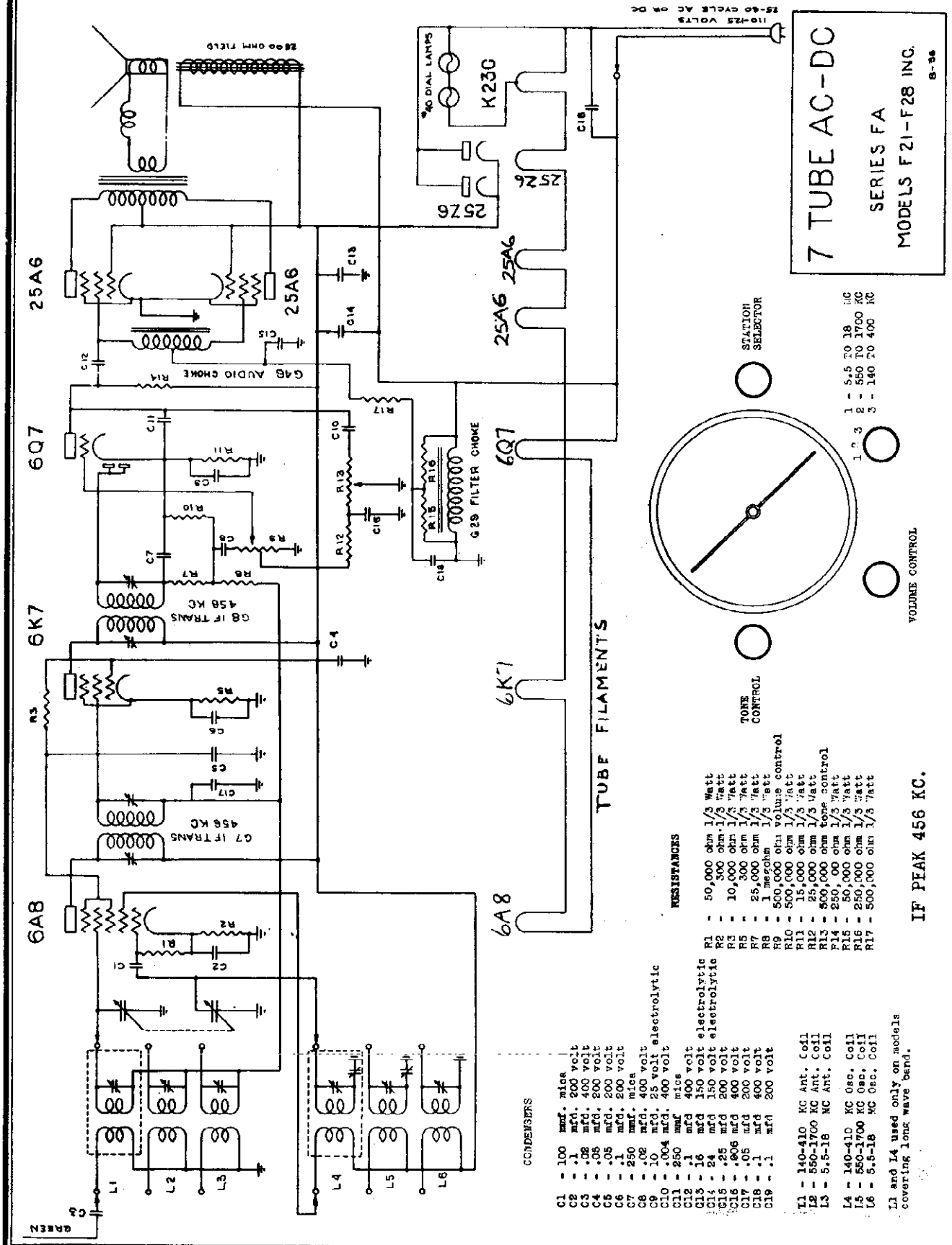

CONDENSERS

C1 - 100 mmf. mica
C2 - .1 mfd. 200 volt
C3 - .02 mfd. 400 volt
C4 - .05 mfd. 200 volt
C5 - .05 mfd. 200 volt
C6 - .1 mfd. 200 volt
C7 - 250 mmf. mica
C8 - .02 mfd. 400 volt
C9 - .10 mfd. 25 volt electrolytic
C10 - .004 mfd. 400 volt
C11 - 250 mmf mica
C12 - .1 mfd 400 volt
C13 - 16 mfd 150 volt electrolytic
C14 - 24 mfd 150 volt electrolytic
C15 - .25 mfd 200 volt
C16 - .006 mfd 400 volt
C17 - .05 mfd 200 volt
C18 - .1 mfd 400 volt
C19 - .1 mfd 200 volt

L1 - 140-410 KC Ant. Coil
L2 - 550-1700 KC Ant. Coil
L3 - 5.5-18 MC Ant. Coil

L4 - 140-410 KC Osc. Coil
L5 - 550-1700 KC Osc. Coil
L6 - 5.5-18 MC Osc. Coil

L1 and L4 used only on models covering long wave band.

RESISTANCES

R1 - 50,000 ohm 1/3 Watt
R2 - 300 ohm 1/3 Watt
R3 - 10,000 ohm 1/3 Watt
R5 - 300 ohm 1/3 Watt
R7 - 25,000 ohm 1/3 Watt
R8 - 1 megohm 1/3 Watt
R9 - 500,000 ohm volume control
R10 - 500,000 ohm 1/3 Watt
R11 - 15,000 ohm 1/3 Watt
R12 - 25,000 ohm 1/3 Watt
R13 - 500,000 ohm tone control
R14 - 250,000 ohm 1/3 Watt
R15 - 50,000 ohm 1/3 Watt
R16 - 250,000 ohm 1/3 Watt
R17 - 500,000 ohm 1/3 Watt

©John F. Rider Publisher

MODEL 293
Series V
Schematic
MODEL Air-Ace
Series M
Changes

HETRO ELECTRICAL INDUSTRIES

4 TUBE T.R.F.
Compact
A. C. - D. C.
200 to 550 Meters

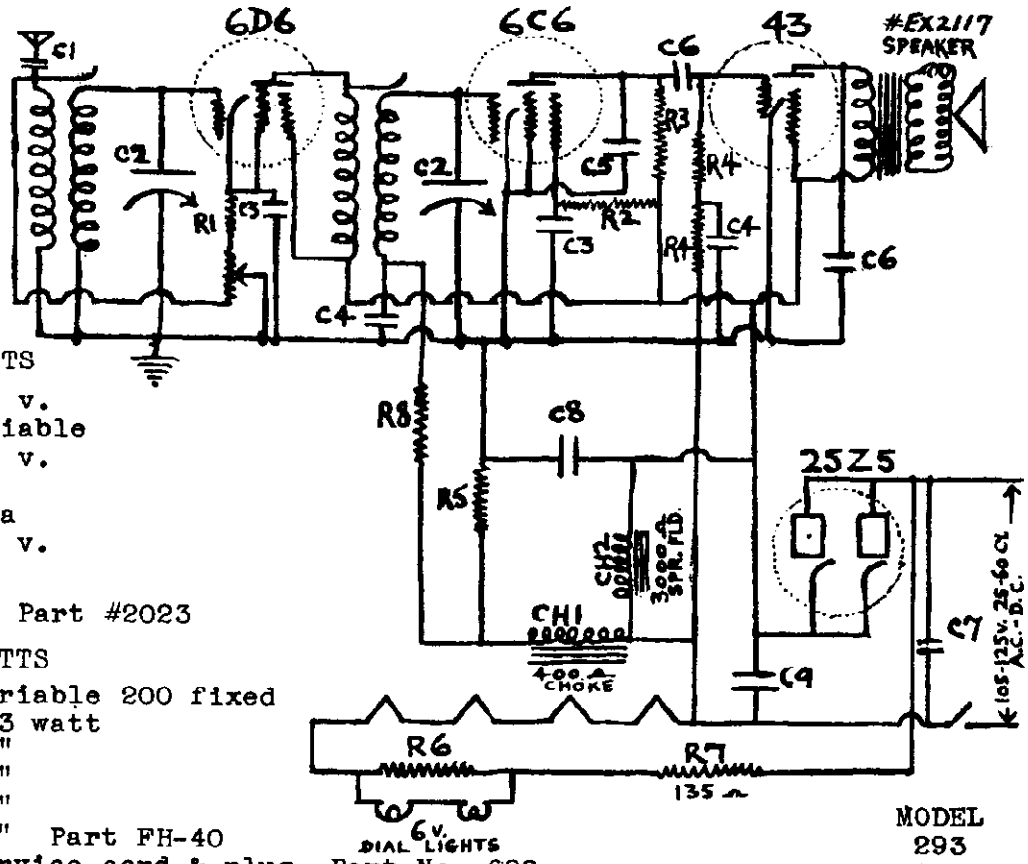

MODEL
293
Series V

CONDENSERS		VOLTS
C1	.01	400 v.
C2	.00037	Variable
C3	.05	200 v.
C4	.25	"
C5	.00025	mica
C6	.01	400 v.
C7	.05	"
C8	12.0	200
C9	16.0	" Part #2023

RESISTANCES		WATTS
R1	25000 ohm variable	200 fixed
R2	2.000,000	1/3 watt
R3	500.000	"
R4	250.000	"
R5	100	"
R6	40	" Part FH-40
R7	135	Service cord & plug, Part No. 682
R8	1.000,000	1/3 watt

REPLACEMENT PARTS

Speaker Part #EX2117 Filter Choke Part #T341 Dial bulb Part #13
Antena Coil Part A1015 R.F. Coil Part #B1049 Vol cont & switch #329
Tubes; 2575, 6D6, 6C6, 43. Adaptor for 220-240 volts operation #319.

Hetro Air-Ace, Series M

Several changes have been made in the 9-tube receiver, whose schematic is shown on *Hetro page 6-15 of Rider's Volume VI*. The tube complement has been changed and is now as follows:

New Tube	Old Tube	Position
6K7	6D6	R.F.
6A8	6A7	Mixer-Osc.
6K7	6D6	1st-2nd I.F.
6R7	85	2nd Det.
6C5	76	A.F.
6B5	42	O.P.
5Z3	80	Rect.

Note. On models using glass tubes only, the 6A7 is used instead of the 6A8.

A new power transformer is used, Part No. P-836, instead of No. T-789. The connections for this are shown in the accompanying sketch.

The resistor, R-7, in the cathode circuit of the output tubes, has been changed from 600 ohms to 250 ohms and is now known as R-17. The resistor, R-8, 700 ohms, in the cathode circuits of the i-f. tubes, has been changed to 250 ohms and is the same as R-1. Also the second i-f. tube cathode is no longer connected to the condenser C-2 and R-1, which was connected to the cathode of the first i-f. tube, but a condenser and resistor similar to C-2 and R-1, connects it to ground. The condenser, C-2, in the secondary circuit of the second i-f. transformer, has been eliminated and the secondary is now directly connected to ground, instead of R-2.

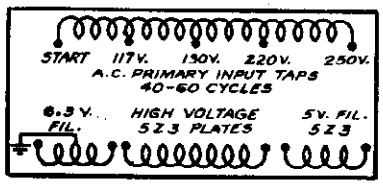

Terminals for power transformer used in Hetro Air Ace, Series M.

The input transformer to the output stage has been removed and a tapped a-f. choke substituted for it. The center tap is grounded, as was the secondary of the transformer formerly used, and each end goes to the grid of the 6B5 tubes. A 0.05-mf. condenser, C-4, replaces C-14, 0.1 mf., in the plate circuit of the 6C5.

The two condensers, C-15, 0.004 mf., have been removed from across the primary of the output transformer and one of them has been connected from the plate of the 6R7 to ground. The tone control, C-4 and R-15, has been moved from across the plates of the output tubes to the plate circuit of the 6R7. One side of C-4 is connected to the plate and the other side to one end of R-15. The arm of this resistor is connected to the junction of C-11 and R-11, which is grounded. R-15 has been changed to 500,000 ohms instead of 40,000 ohms and R-11 has been changed to 1500 ohms from 5000 ohms. R-14 in the cathode circuit of the 6C5 has been changed to 3000 ohms from 6000.

©John F. Rider, Publisher

HERBERT H. HORN

MODEL 5A
MODEL 66MT
Schematics

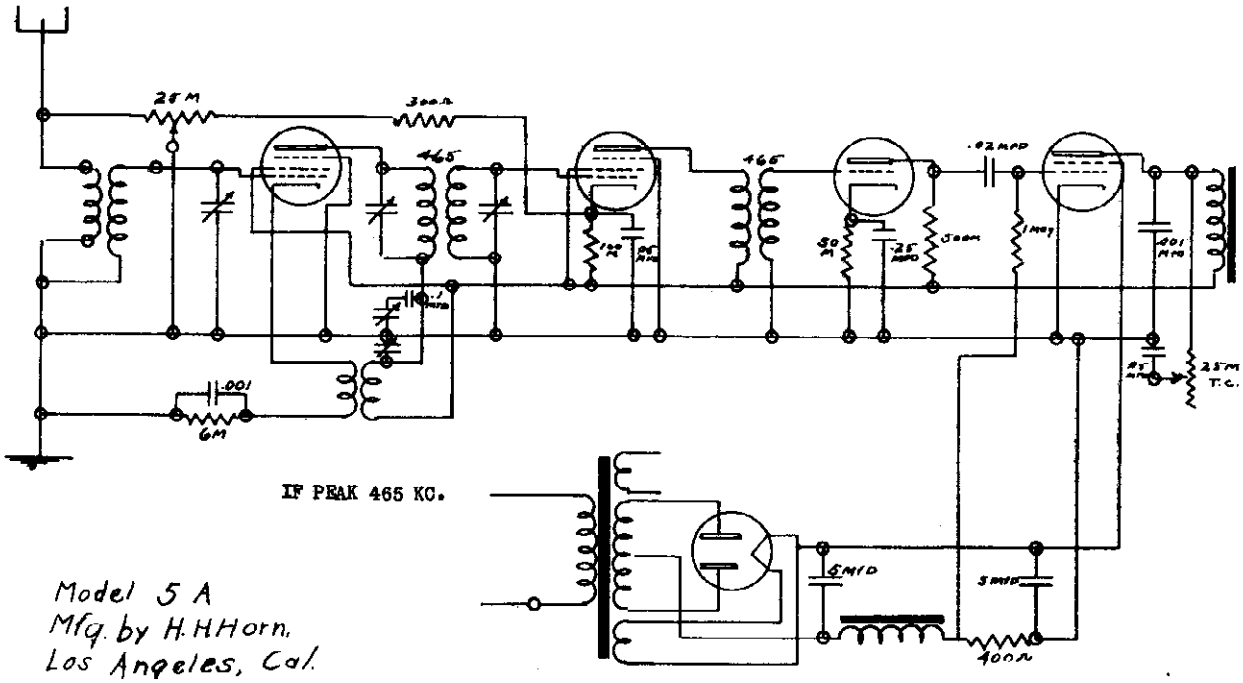

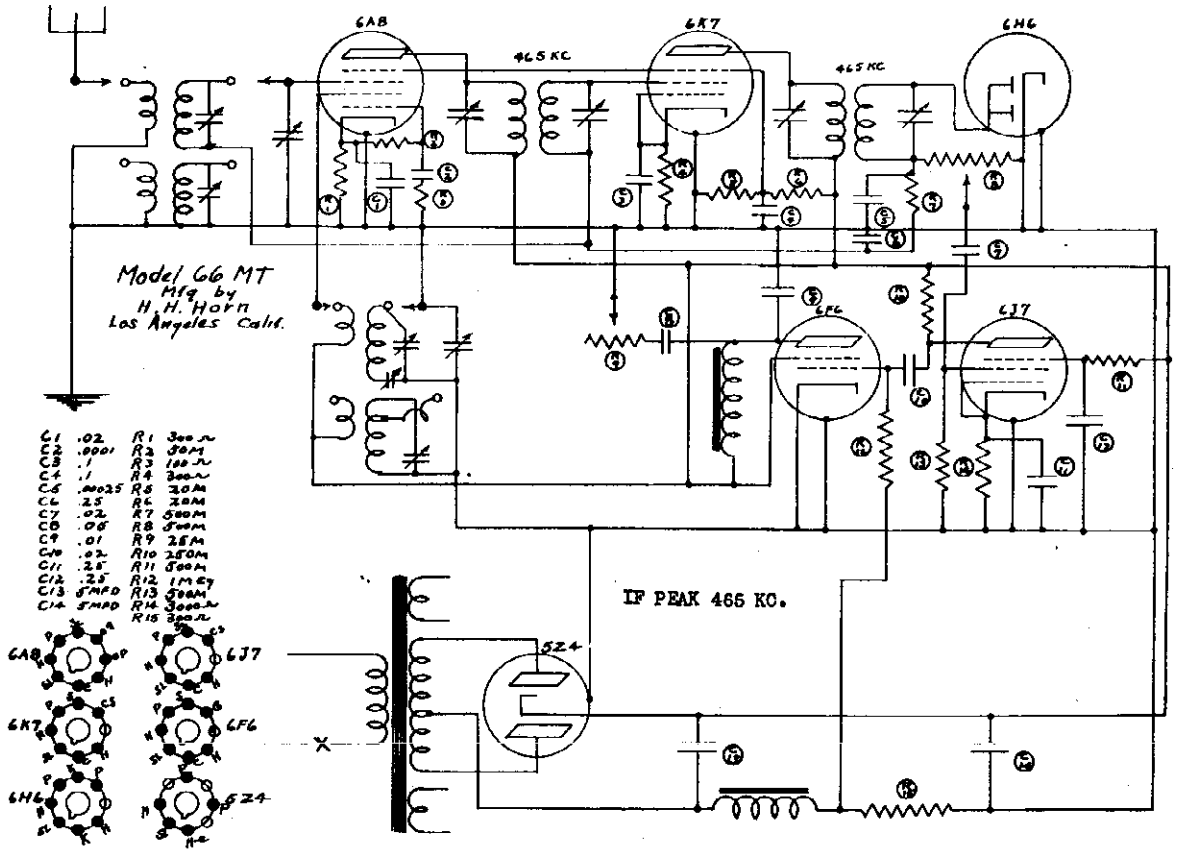

©John F. Rider, Publisher

MODEL 5MTD
MODEL 7MT
Schematics

HERBERT H. HORN

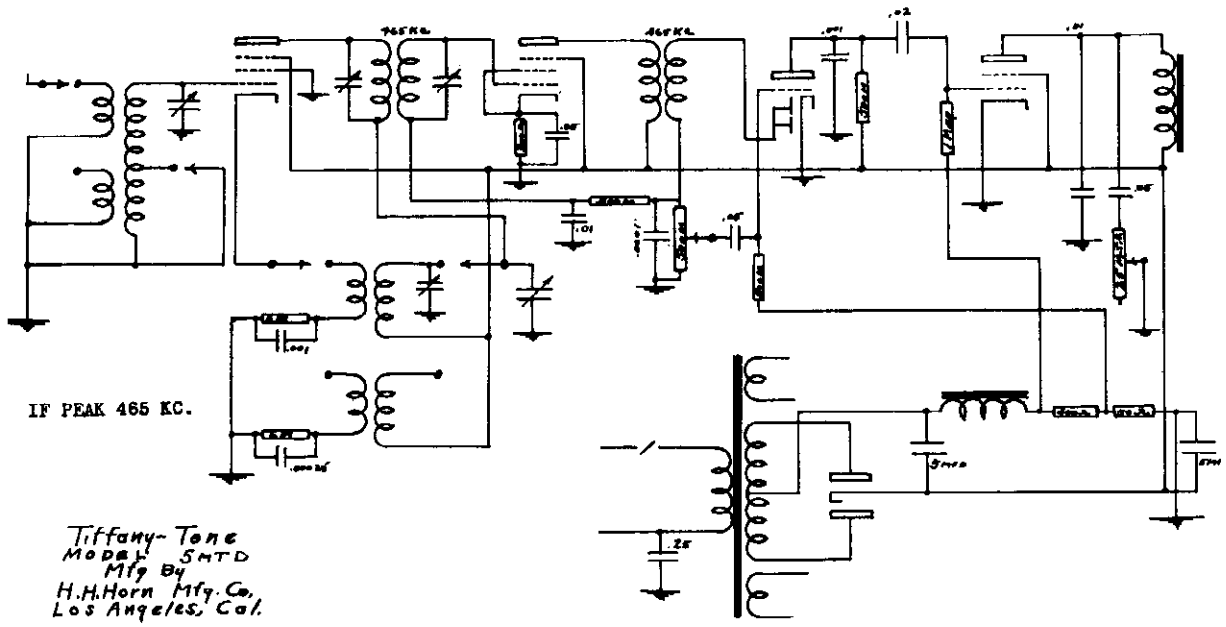

Tiffany-Tone
Model 5MTD
Mfg By
H.H.Horn Mfg. Co.
Los Angeles, Cal.

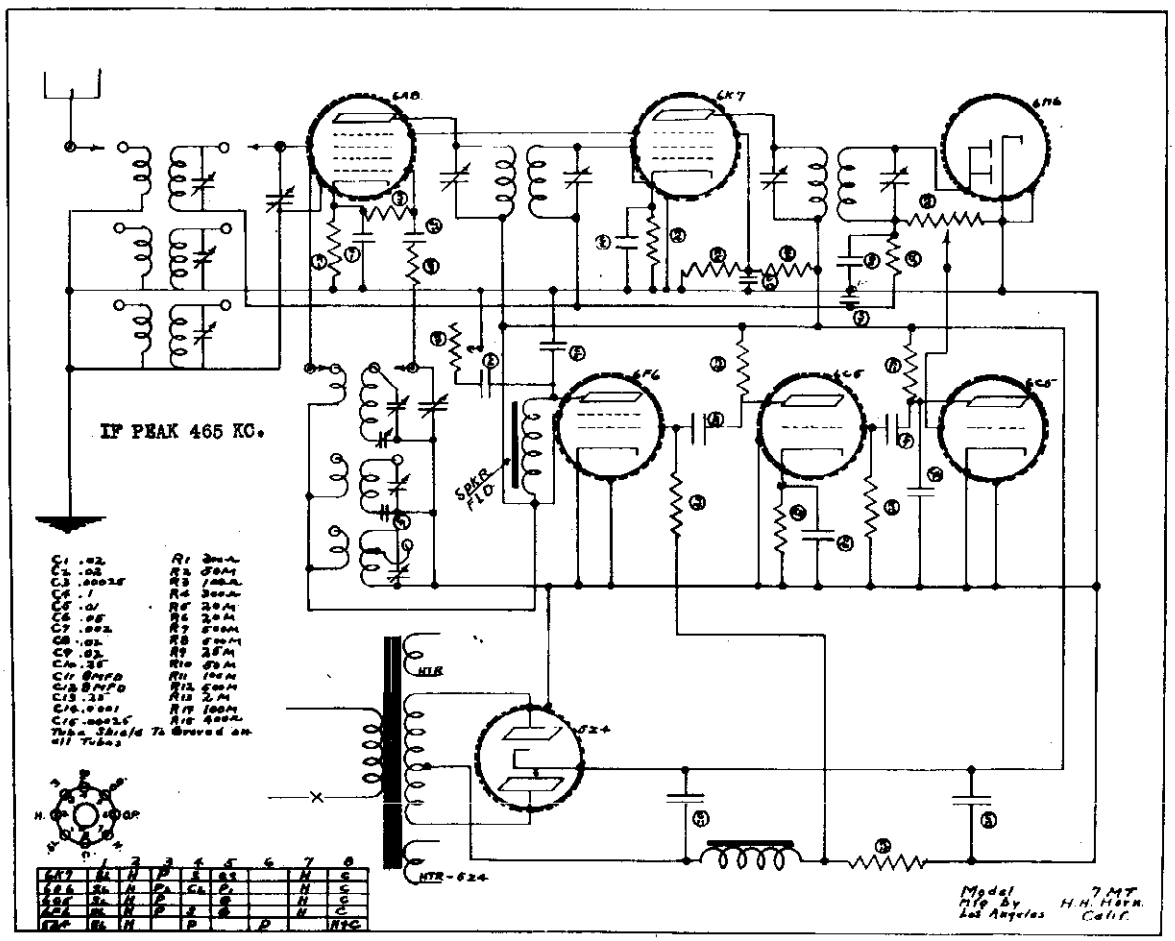

©John F. Rider, Publisher

HERBERT H. HORN

MODELS 9MT, 9MTC
Schematic

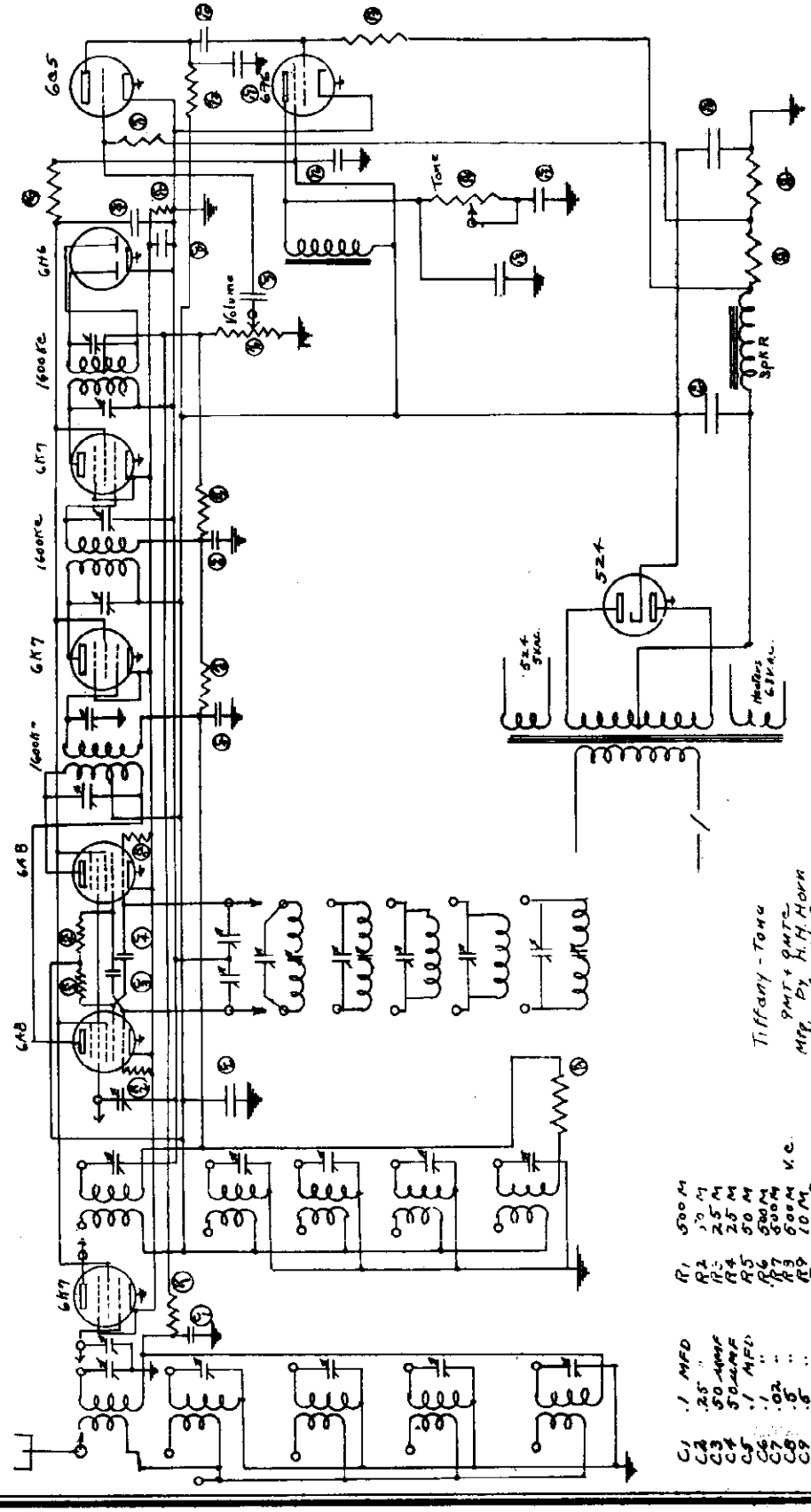

MODEL 10MT
MODEL 76
Schematics

HERBERT H. HORN

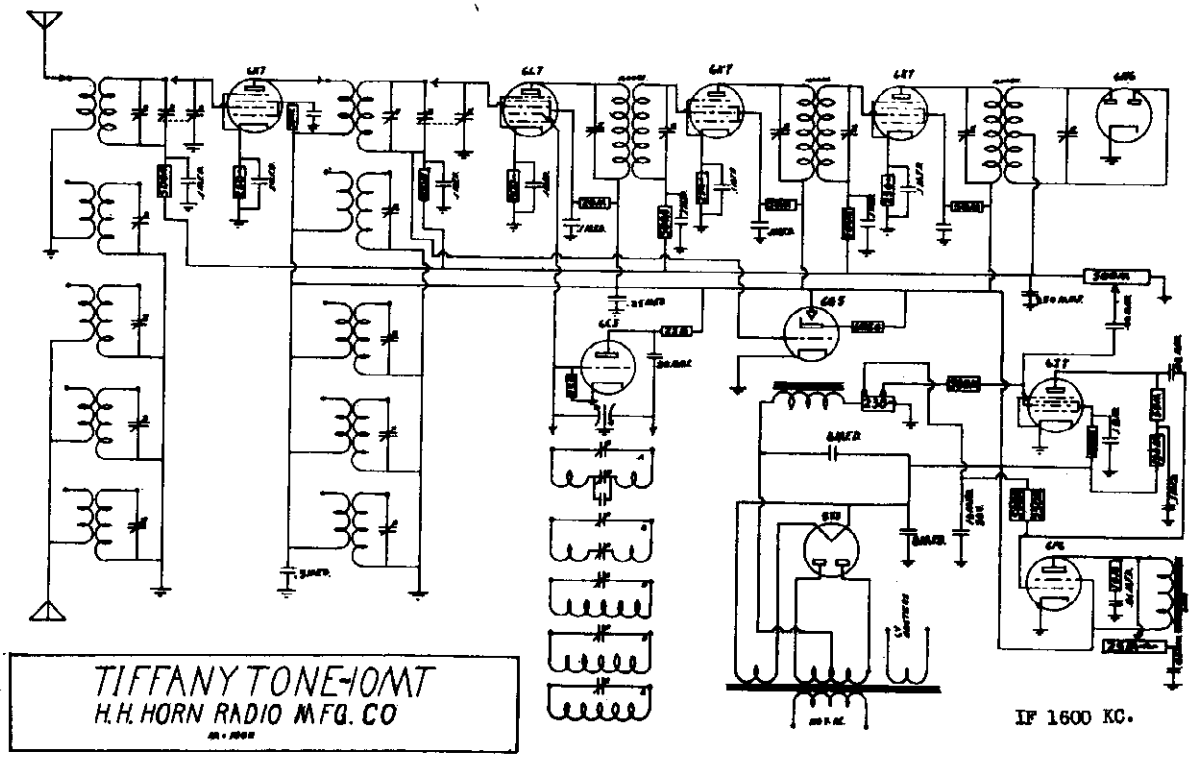

TIFFANY TONE-10MT
H.H. HORN RADIO MFG. CO

IF 1600 KC.

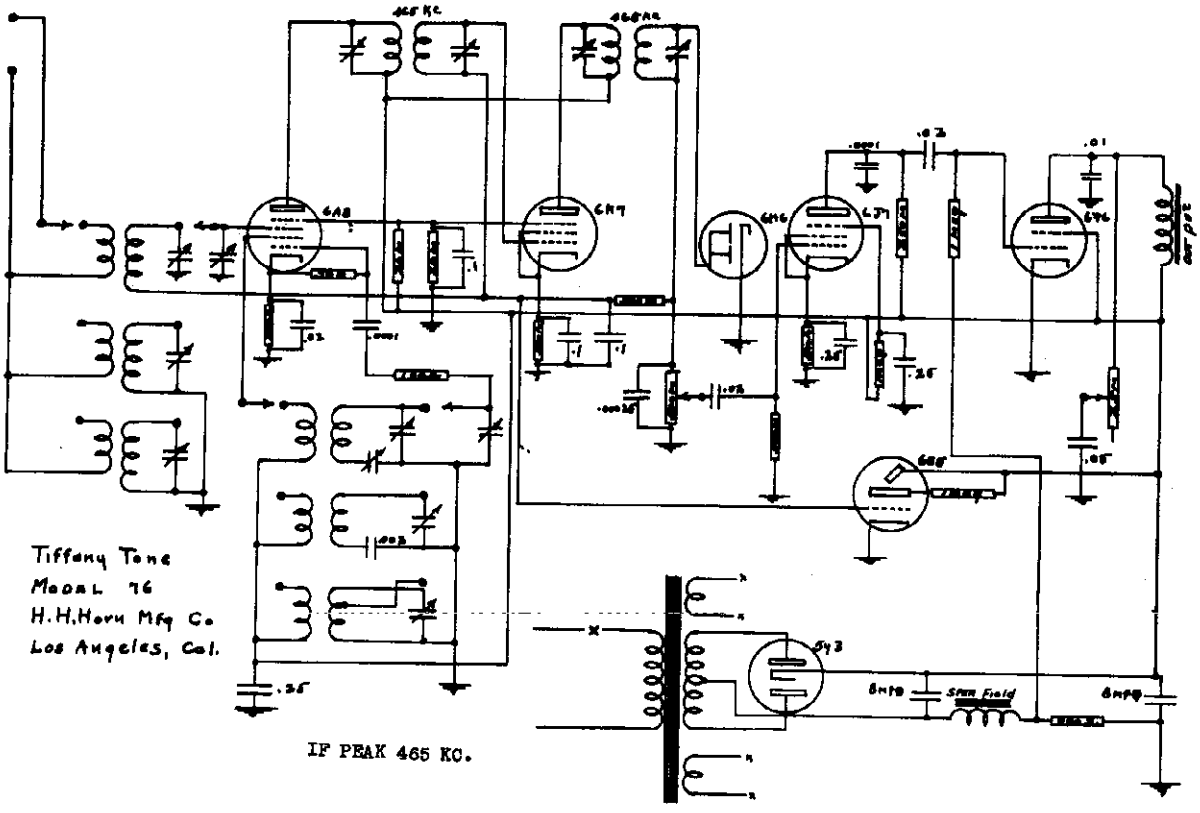

Tiffany Tone
Model 76
H.H.Horn Mfg Co.
Los Angeles, Cal.

IF PEAK 465 KC.

©John F. Rider Publisher

HERBERT H. HORN

MODEL 17 MT
Schematic

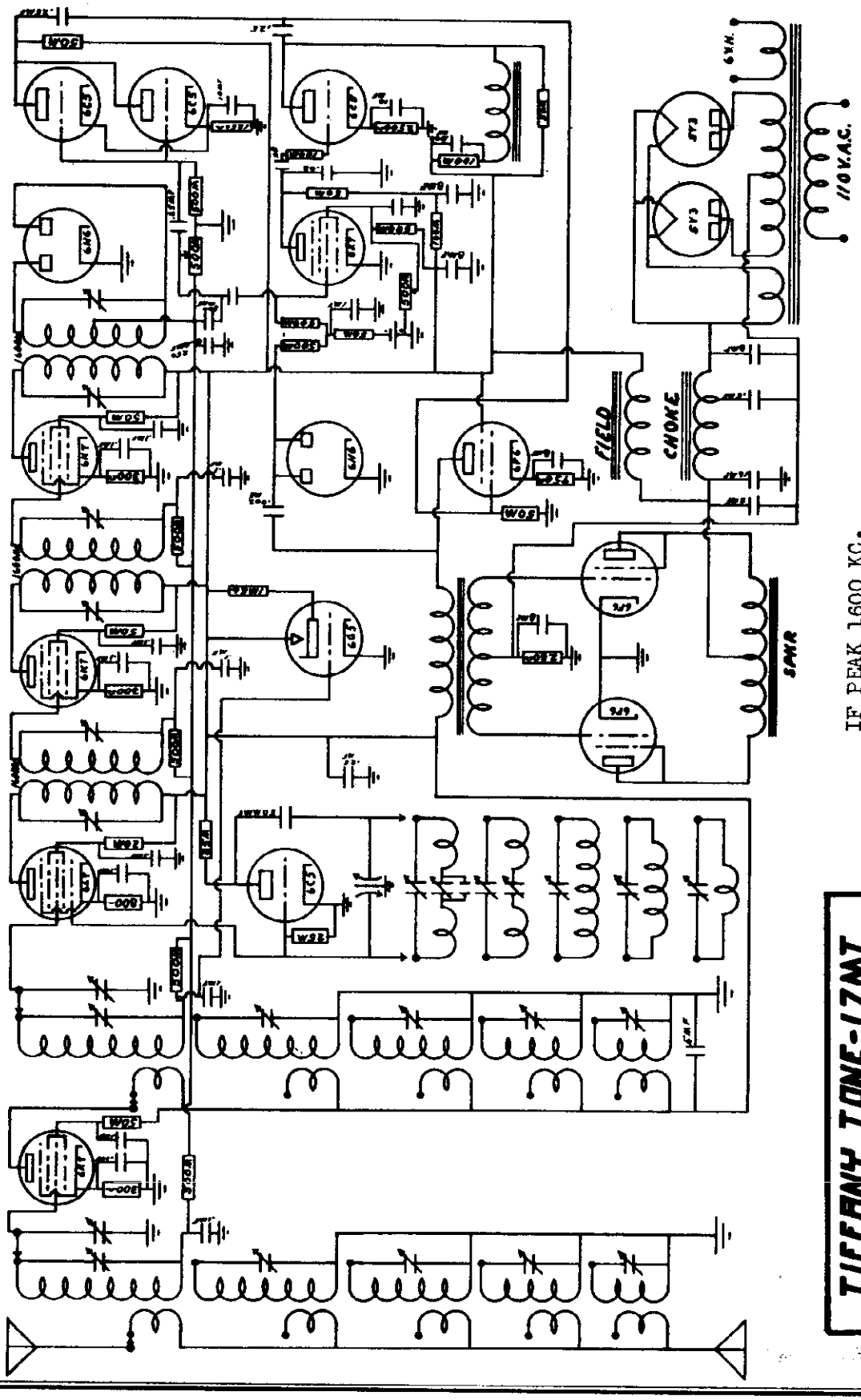

©John F. Rider, Publisher

MODEL 51
MODEL 62
Schematics

HERBERT H. HORN

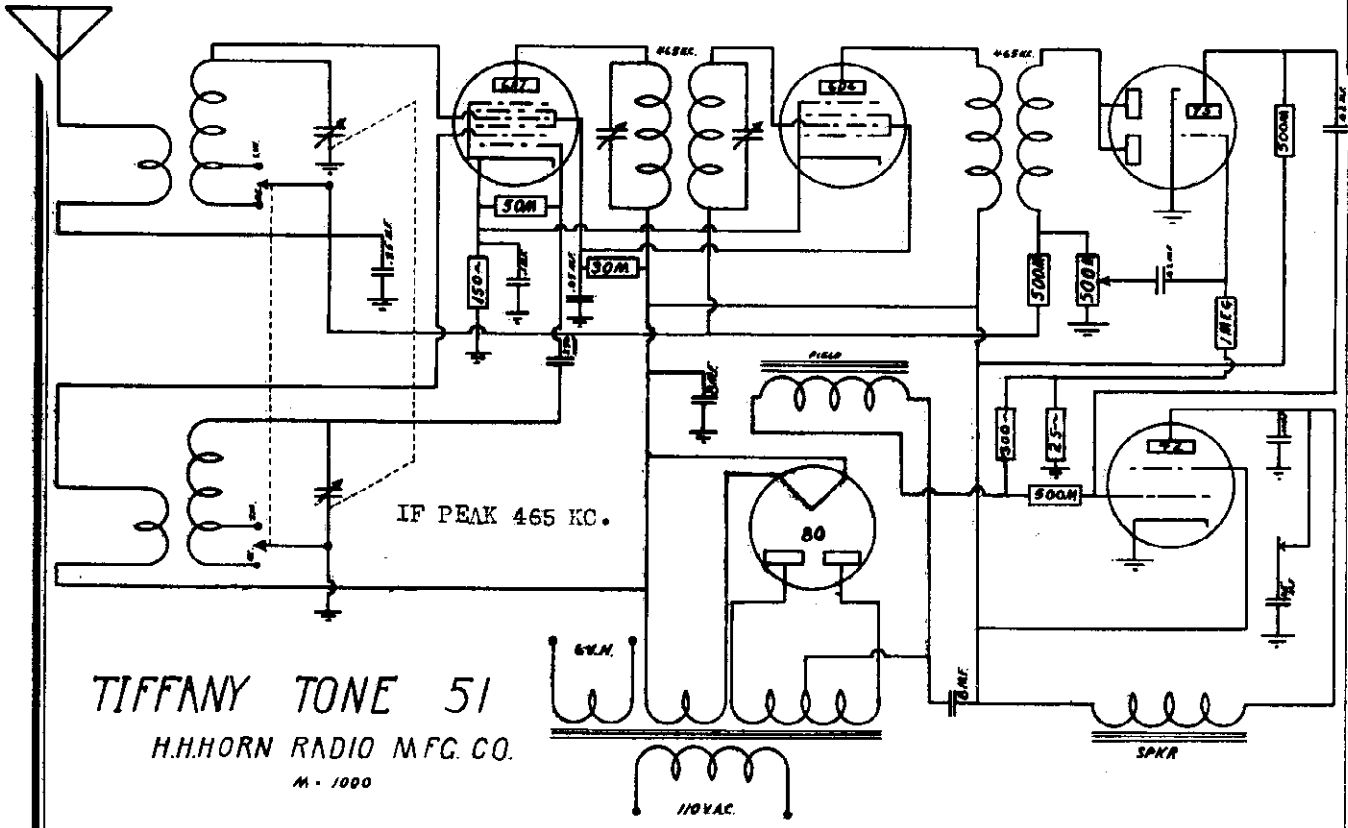

TIFFANY TONE 51
H.H.HORN RADIO MFG. CO.
M-1000

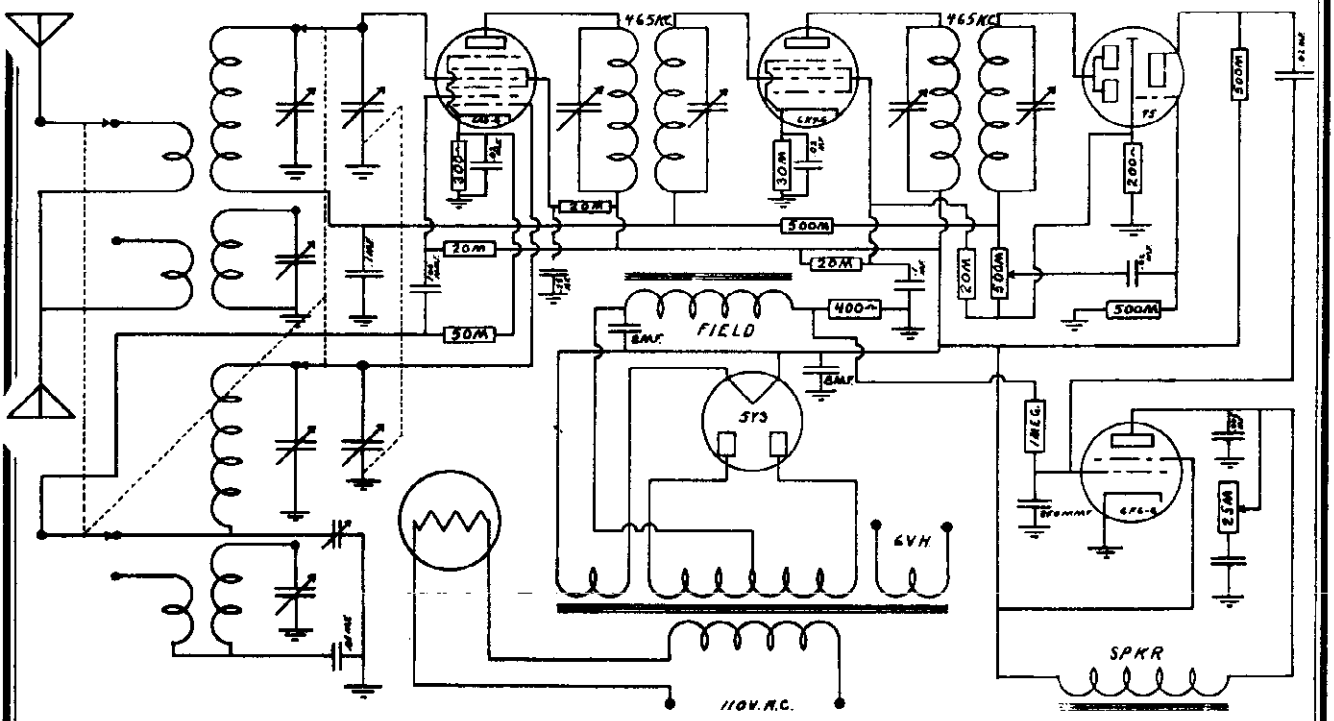

IF PEAK 465 KC.

TIFFANY TONE 62
H.H. HORN RADIO MFG. CO.
M-1000

HERBERT H. HORN

MODEL 535
MODEL 52
Schematics

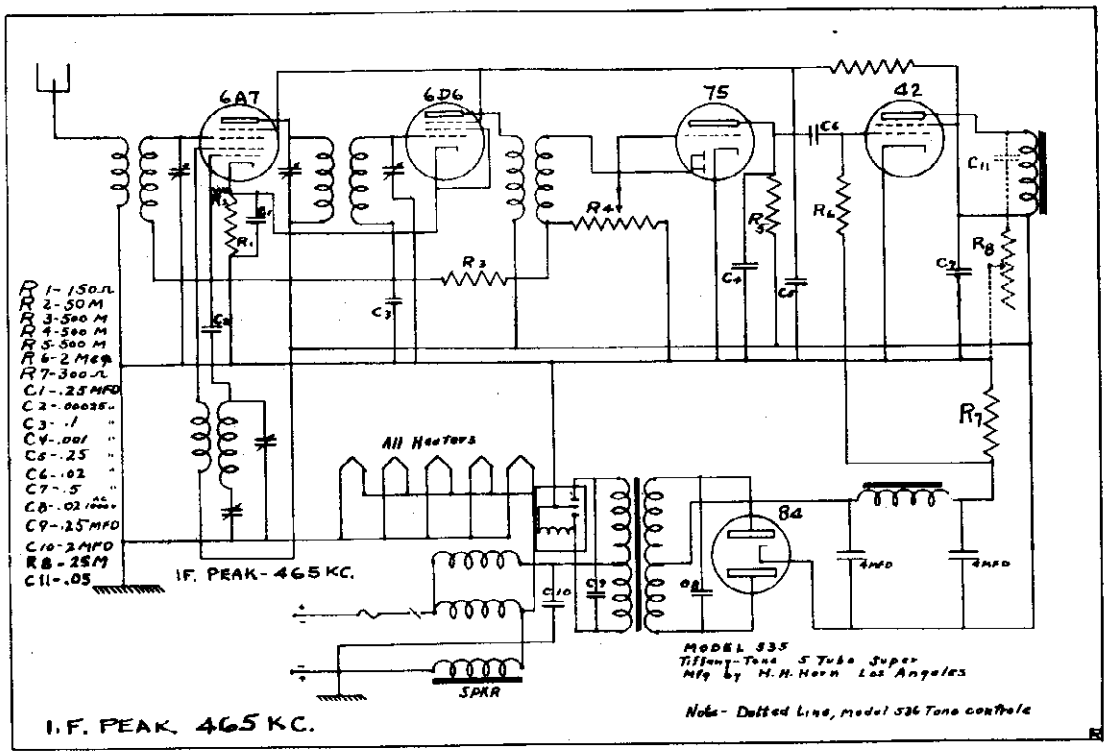

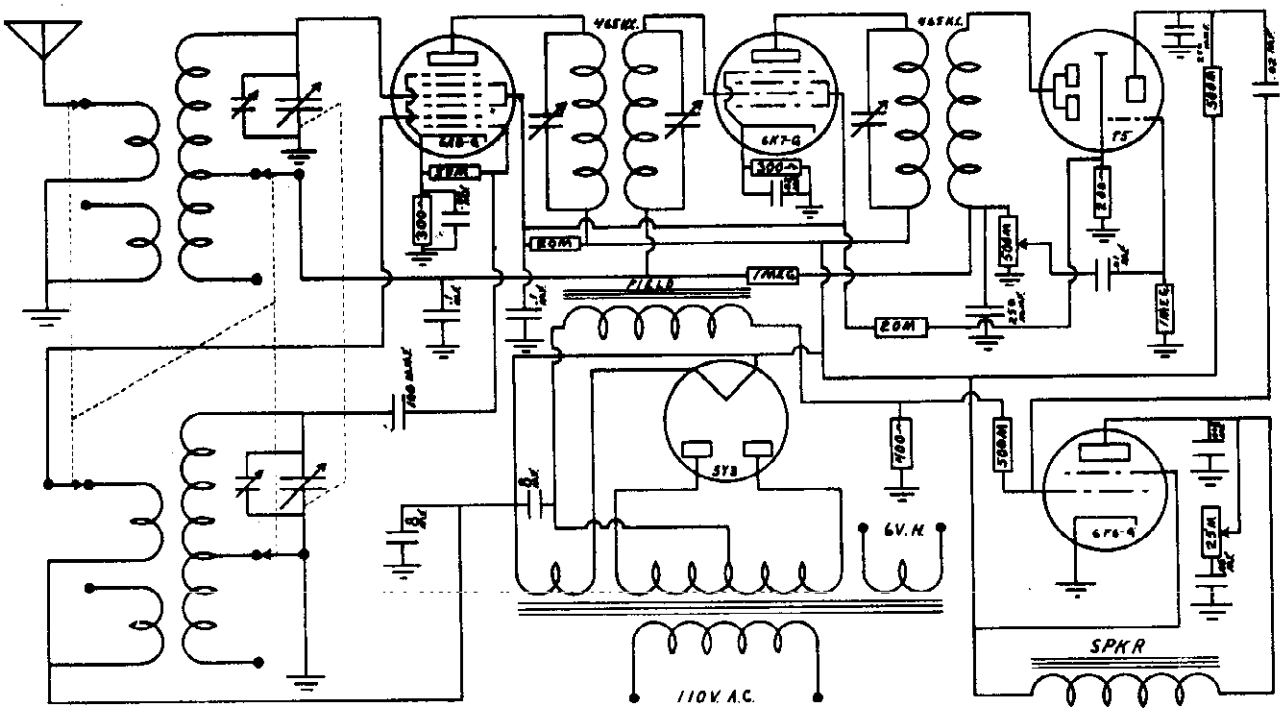

IF PEAK 465 KC.

TIFFANY TONE 52
H.H. HORN RADIO MFG. CO.
M-1000

© John F. Rider Publisher

MODEL 63
MODEL 83
Schematics

HERBERT H. HORN

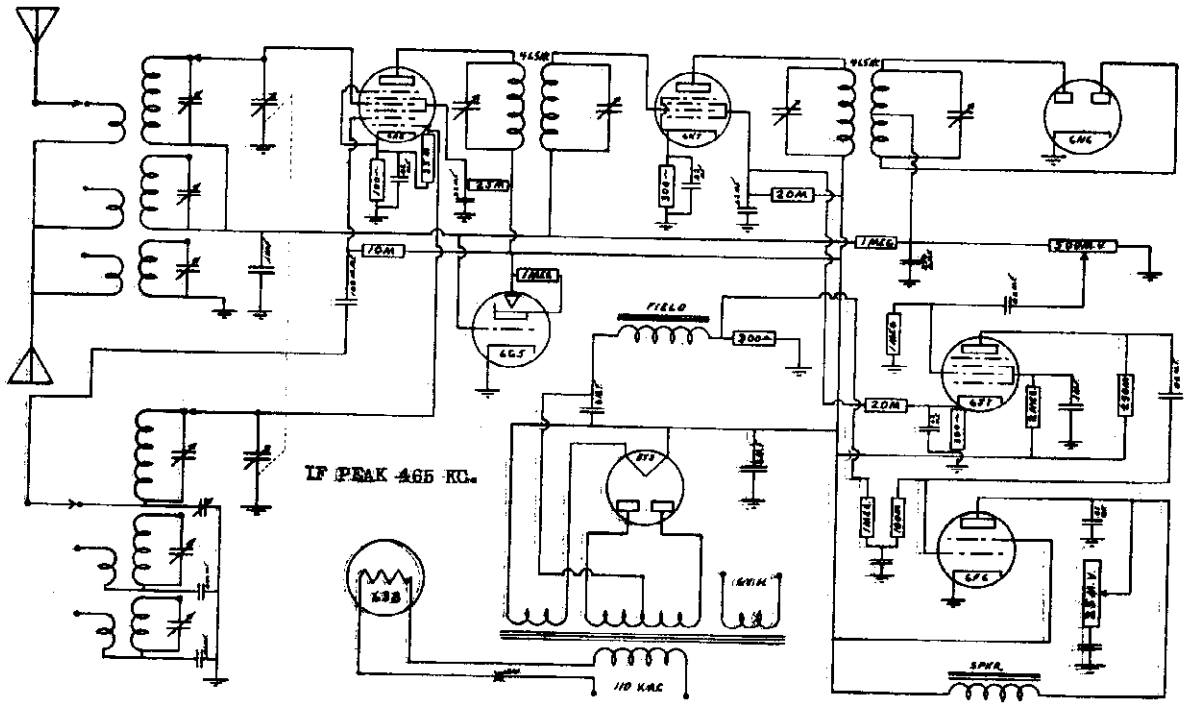

TIFFANY TONE - 83
H H HORN RADIO MFG CO
M - 1008

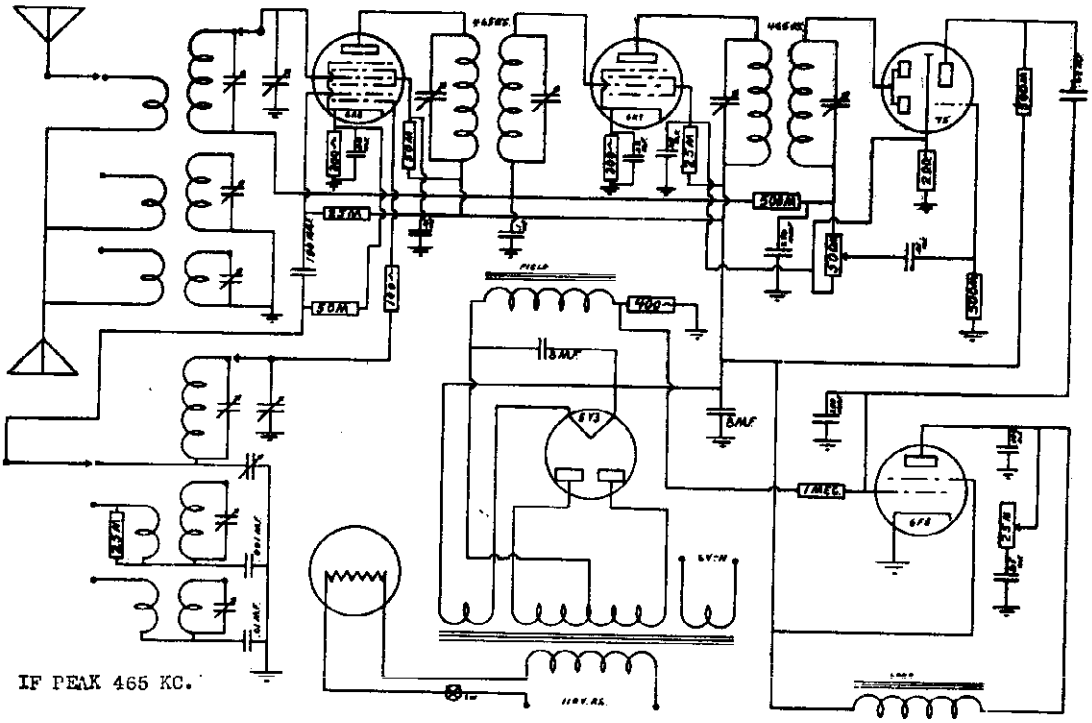

TIFFANY TONE-63
H.H. HORN RADIO MFG. CO.
M - 1008

©John F. Rider, Publisher

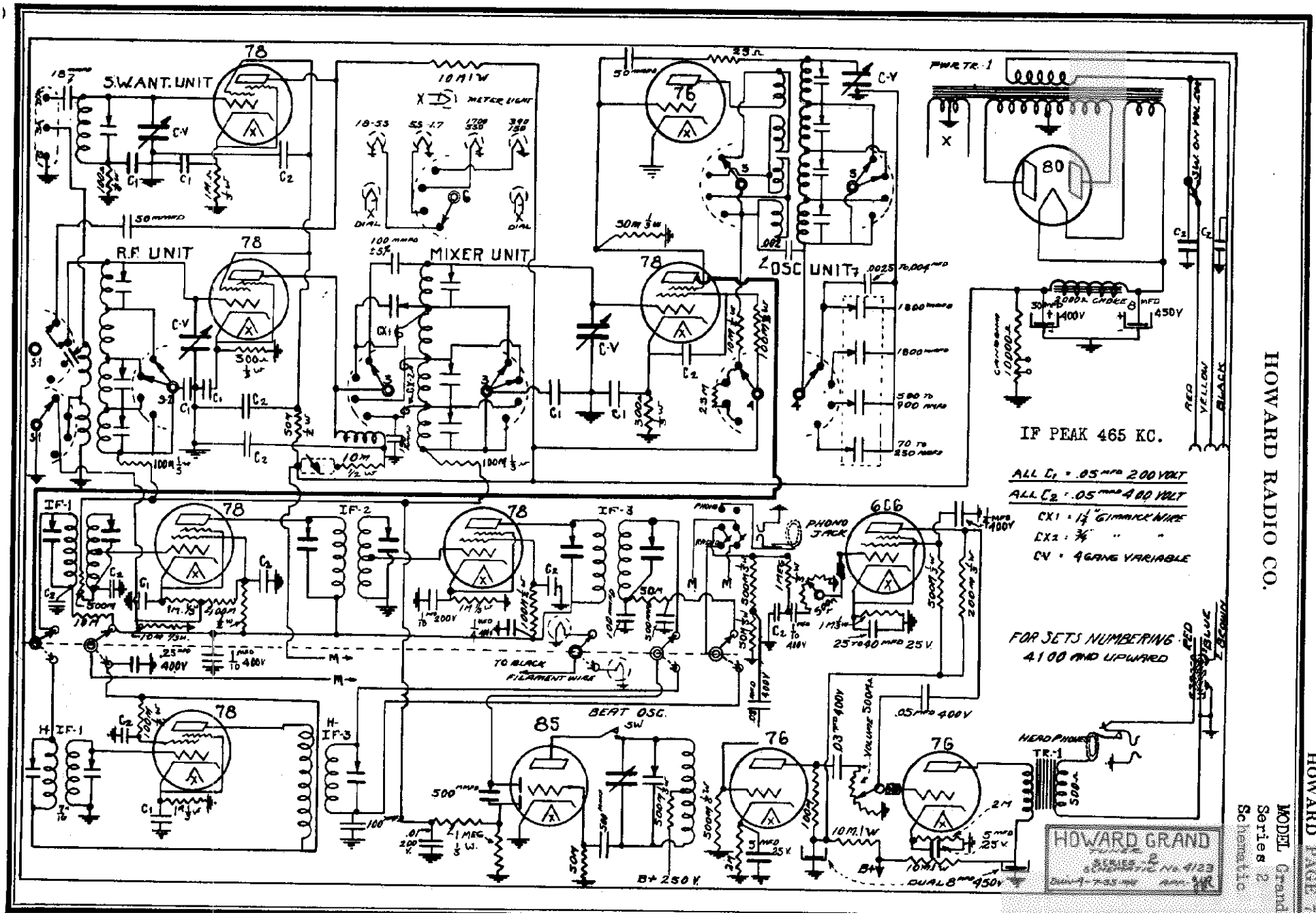
HOWARD RADIO CO.
MODEL Grand
Series 2
Schematic
S.W.ANT. UNIT
R.F. UNIT
MIXER UNIT
OSC UNIT
PWR TR-1
IF PEAK 465 KC.
ALL C1 = .05 mfd 200 VOLT
ALL C2 = .05 mfd 400 VOLT
CX1 = 1¼" GIMMICK WIRE
CX2 = ¾" " "
CV = 4 GANG VARIABLE
FOR SETS NUMBERING 4100 AND UPWARD
PHONO JACK
BEAT OSC.
TO BLACK FILAMENT WIRE
HEAD PHONES
TR-1
B+ 250 V.
DUAL 8 mfd 450V
IF-1
IF-2
IF-3
H-IF-1
H-IF-3
RED
YELLOW
BLACK
BLUE
BROWN

MODEL Grand
Series 2
Socket, Trimmers
Alignment

HOWARD RADIO CO.

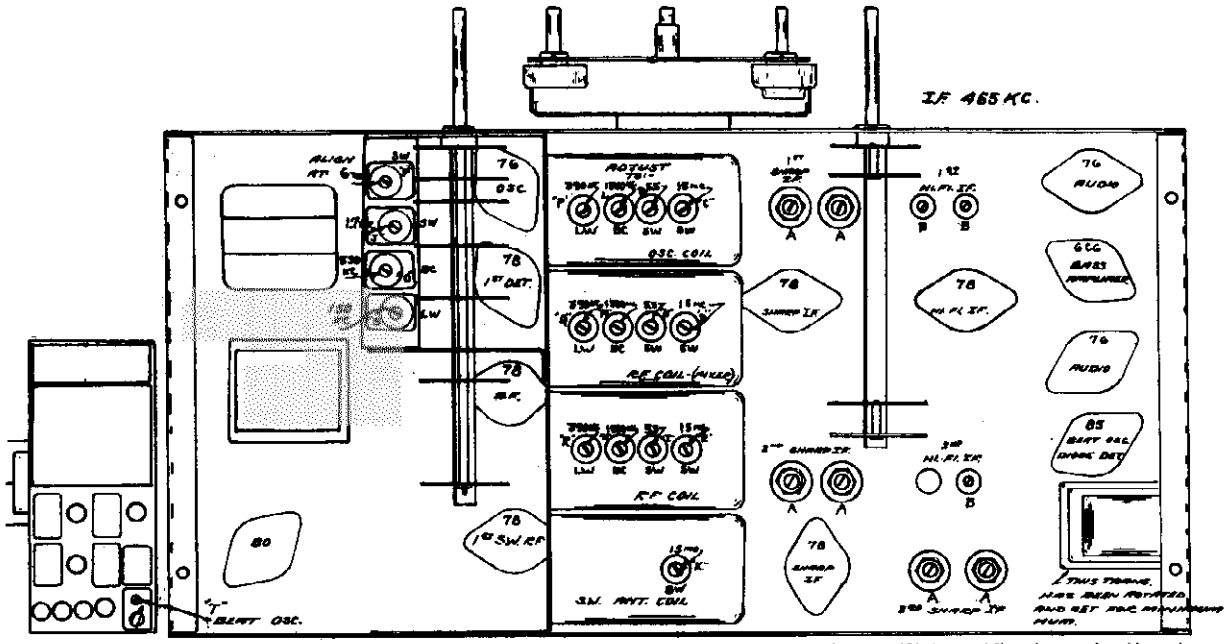

ALIGNMENT OF THE OSCILLATOR AND R.F. CIRCUITS

SERVICING EQUIPMENT NECESSARY

The following alignment instructions are given with the assumption that the service station has a signal generator capable of accurately covering the range of the receiver.

A vacuum tube volt meter is preferred to indicate resonance, though an 0 to 3 AC voltmeter can be connected across the voice coil for this purpose.

The two High Fidelity Broad I.F. Stages can not be correctly aligned by the usual methods as a Cathode-Ray oscillograph is required to visually show the resonance curve. Since these stages are broad, they are not liable to get out of adjustment easily after they have once been set, so they should not require any attention unless a replacement has been made of one of the coil units.

Refer to diagram for location of various trimmers.

ALIGNING THE I.F. STAGES

The alignment of the Broad I.F. Channel has been mentioned above. On some sets the trimmers extend through top of can. Also the last stage has a tuned primary.

The regular selective I.F. stages are coded "A" on the diagram and are aligned in the usual manner of feeding the 465 K.C. signal into the grid of the 78 Mixer Tube.

The trimmers should be very carefully tuned to resonance as they are very critical and will greatly affect the performance of the receiver.

The sensitivity of the I.F. stages should be between 25 and 50 Microvolts.

NOTE BEFORE ALIGNING OSCILLATOR AND RF CIRCUITS

(a) Align the I.F. Stages first.
(b) Always adjust oscillator stage before the R.F. in any particular band.
(c) Before aligning be sure dial pointer is set exactly on the 180 degree line which is the line straight across the middle of the dial with tuning condenser in full maximum position.
(d) Bend the plates on the oscillator section only and only on the broadcast band if necessary.
(e) Seal trimmers with wax.
(f) After the high frequency adjustments have been made on short wave bands, a check may be made by advancing the signal generator to 930 K.C. higher in frequency, which is the image of the receiver oscillator. After increasing the output of the signal generator a signal should be heard which will be an indication that the original adjustment has been made on the correct frequency.

1. Set band switch to 2nd (or highest frequency) band.

Set dial hand to 15 M.C. and adjust trimmer "C" to 15 M.C. fed into antenna.

Align R.F. Circuit trimmers "D", "E" and "K" same frequency.

Now set dial hand to 6 M.C. on same band and adjust padding condenser "F" to resonance.

2. Set band switch to next short wave band -- 5.5 to 1.7 M.C.

Rotate dial hand to 5.5 M.C. and adjust trimmer "G" to 5.6 M.C. signal.

Align R.F. circuit trimmers "H" and "I" to same frequency.

Rotate dial to 1.7 M.C. on same band and adjust padding condenser "J" to resonance.

3. Set band switch to Broadcast position.

With dial hand at 1500 K.C. peak trimmer "L" to resonance.

Peak R.F. Trimmers "M" and "N" to 1500 K.C.

Rotate dial hand to 550 and adjust padding condenser "O" to 550 K.C.

Check dial at 950 to K.C. and bend oscillator plates if necessary at any point to align with calibration of dial.

4. The long wave band is aligned with the band switch set on that band and trimmer "P" adjusted to 390 K.C. will dial hand at 390 K.C.

Adjust R.F. circuits with trimmers "Q" and "R".

Rotate dial to 150 K.C. and align padding condenser "S" to resonance.

5. Beat Oscillator Adjustment

Set dial to some frequency, for example --- 7 M.C. and adjust trimmer "T" until note is heard.

6. The Whistle Trap

Located in the amplifier is the high frequency choke with its trimmer, which has been peaked to 10,000 K.C. at factory.

©John F. Rider, Publisher

HOWARD RADIO CO.

MODEL HA-6
Early
Schematic
Parts List

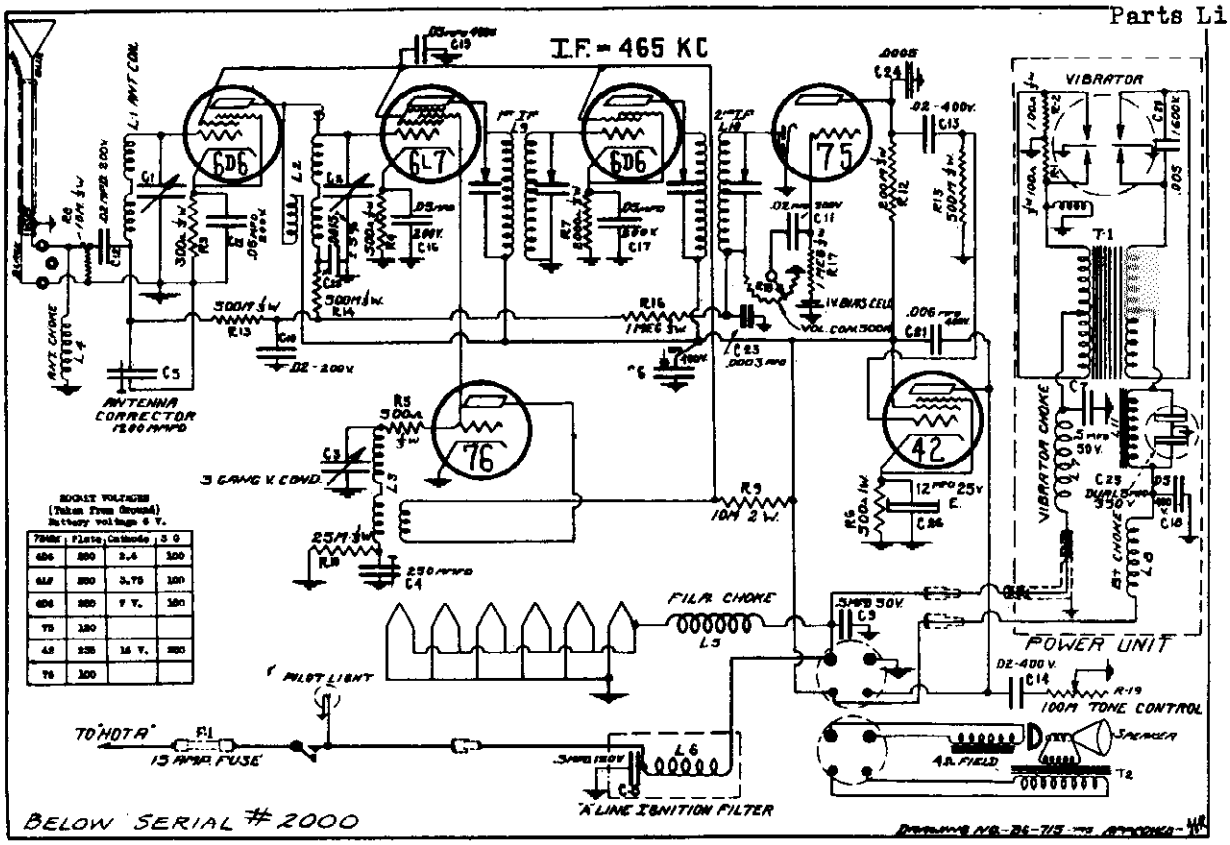

SOCKET VOLTAGES
(Taken from Ground)
Battery voltage 6 V.

Tube	Plate	Cathode	S G
6D6	250	2.4	100
6L7	250	3.75	100
6D6	250	7 V.	100
75	180		
42	235	16 V.	235
76	100		

REPLACEMENT PARTS LIST

WHEN ORDERING, USE PART NO. AND DESCRIPTION SHOWN ON THIS LIST REGARDLESS OF NUMBER PRINTED ON PART ITSELF. FOR ALL ORDERS OR COMMUNICATIONS REGARDING THIS RECEIVER ALSO MENTION CHASSIS HA6. PRICES SUBJECT TO CHANGE WITHOUT NOTICE

Part No.	Schematic Location	Description	List Price
7601		Bias Cell - 1 Volt	.20
5600		Cable - Flexible drive with fittings	.85
5552		Cable - Antenna	.50
5530A		Cable - "A" Battery with fuse holder	.50
5533		Cable - Battery and B + lead (inside set)	.32
5531		Short "A" lead (extending from set)	.25
5534		Long "A" lead (extending from drive head)	.80
4302	L11	Choke - filter (power unit)	.92
9525	L1	Coil - Antenna, complete assembly	.85
9524	L2	Coil - Mixer, complete assembly	.85
9526	L3	Coil - Oscillator, complete assembly	.85
9528	L4	Coil - Antenna input choke	.85
9527	L5	Coil - Filament choke	.85
9528	L6	Coil - Ignition choke	.85
9529	L7	Coil - Vibrator primary choke	.85
9530	L8	Coil - B + Choke	.85
9531	L9	Coil - 1st. I.F. Assembly	1.30
9532	L10	Coil - 2nd. I.F. Assembly	1.30
9121	C1 C2 C3	Condenser - variable tuning	3.50
9223	C4	Condenser - Padding 2 stud mounting	.28
9224	C5	Condenser - Padding, single mounting	.28
	C6	Condenser - .1 Mfd - 400 volt	.20
	C7	Condenser - .5 Mfd - 50 volt (power unit)	.40
	C8	Condenser - .5 Mfd - 120 volt	.40
	C9	Condenser - .5 Mfd - 50 volt	.36
	C10 C11 C12	Condenser - .02 Mfd - 200 volt	.16
	C13 C14	Condenser - .02 Mfd - 400 volt	.20
	C15 C16 C17	Condenser - .05 Mfd - 200 volt	.16
	C18 C19	Condenser - .05 Mfd - 400 volt	.20
	C20	Condenser - .005 Mfd - 1600 volt	.36
	C21	Condenser - .006 Mfd - 400 volt	.20
	C22	Condenser - .0015 Mica	.16
	C23	Condenser - .0003 Mica	.16
	C24	Condenser - .0005 Mica	.12
9225	C25	Condenser - Dual 8 Mfd. - 350 volt	1.80
9223	C26	Condenser - 12 Mfd. - 25 volt	.60
		Condenser - .5 Mfd. - 200 volt (can Type for Generator)	.40
9226	R18	Control - volume	.90
9225	R19	Control - tone	.75
4558		Coupling - insacup on vari. cond.	.12
5103		Coupling - male for wire leads	.20
6102		Coupling - female for wire leads	.20
		Dial Card - calibrated	.28
5717		Dial Plate	1.15
3415	F1	Fuse - 15 ampere	.30
7904		Fuse - insulating tube	.04
480		Grid cap - large	.04
6012		Grid cap - metal tube	.04
7809		Grommet - Large rubber - 1/2" ID	.04
7109		Knob - volume control & switch	.80
7110		Knob - large control	.80
4106		Lamp - 6 volt pilot - bayonet type	.12
6420		Mounting Studs for Mtg. plate	.12
9006		Nuts for above	.12
758		Nut - thumb, round, knurled (power unit)	.04
6521		#8 P.K. Screw - hex head 1/4" long	.04
742		#8 P.K. Screw - hex head 3/8" long	.04
882		#6 P.K. Screw - hex head 1/4" long	.04
855		8-32 Headless set screw 1/8" long (couplings)	.04
6415		Cover Screw (Power Unit)	.12
4666		Cable anchor bushing (var. condenser)	.08
4669		Cable anchor bushing (volume control)	.08
820		#8 Washer 1/2" OD	.04
6421		Wing screw - 5/16 - 18 x 3/8" long	.08
7064		Wing screw Washer	.05
	R1 R2	Resistor - 100 ohm 1/3 Watt - Moulded bakelite	.12
	R3	Resistor - 300 ohm 1/3 Watt - Moulded bakelite	.12
	R4 R5	Resistor - 500 ohm 1/3 Watt - Moulded bakelite	.12
3565	R6	Resistor - 500 ohm 1/2 Watt - Wirewound	.15
	R7	Resistor - 2000 ohm 1/3 Watt - Moulded bakelite	.12
	R8	Resistor - 10M ohm 1/3 Watt - Moulded bakelite	.12
	R9	Resistor - 10M ohm 1 Watt - Moulded bakelite	.18
	R10	Resistor - 25M ohm 1/3 Watt - Moulded bakelite	.12
	R12	Resistor - 200M ohm 1/3 Watt - Moulded bakelite	.12
	R13 R14 R15	Resistor - 500M ohm 1/3 Watt - Moulded bakelite	.12
	R16 R17	Resistor - 1 megohm 1/3 Watt - Moulded bakelite	.12
		Resistor - 15M ohm (Distributor suppressor)	.25
4182		Remote control head (for under-dash mounting)	6.50
4018		Worm drive - replacement unit (var. cond.)	1.40
2746		Socket - 6 prong	.14
6006		Socket - 8 prong	.16
2745		Socket - 5 prong	.14
2744A		Socket - 4 prong - phenolic	.25
6005		Socket - 3 prong - antenna	.06
6014		Socket - vibrator	.12
8917		Speaker - 6 inch.	4.50
4521	T2	Speaker transformer - Specify if Jensen or Rola	1.80
4208	T1	Transformer - power	2.50
6551		Tube Shield assembly	.25
6552		Tube Shield ground clip	.15
9600		Vibrator - (synchronous)	3.30
3960		Main Mounting Plate	2.50

©John F. Rider. Publisher

MODEL HA-6
Early
Alignment, Notes
Socket, Trimmers

HOWARD RADIO CO.

ALIGNMENT PROCEDURE

PRELIMINARY

Output Meter Connections (Copper Oxide Type Meter) . . Across voice coil
Output Meter reading to indicate 1 Watt output . . . . . 1.73 Volts
Average sensitivity in microvolts for 1 Watt output . . See chart below

Generator ground lead connection . . . . . Receiver Chassis
Dummy antenna value in series with generator output lead See chart below
Connection of generator output lead . . . . . See chart below

Position of volume control . . . . . Full on
Position of tone control . . . . . OFF (or treble position)
Position of dial card at Maximum Capacity . . . . . Max. Setting line

BAND RANGE	POSITION OF DIAL POINTER	GENERATOR FREQUENCY	DUMMY ANTENNA	GENERATOR CONNECTION	TRIMMERS ADJUSTED (in order shown)	MICRO-VOLTS
I.F.Stages	540 KC	465 KC	.1 Mfd.	Trans Grid	C31 C32 C33 C34	1000
Regular	1400 KC	1400 KC	.0002	Ant. Lead	C35 C36 C37	2
Regular	600 KC	600 KC	.0002	Ant. Lead	C4 C5	2

IMPORTANT ALIGNMENT NOTES

1. After adjusting the C4 oscillator padding condenser at 600 KC rotate dial back to 1400 KC and recheck the settings made on C35, C36, C37.

2. It will not be necessary to bend the plates of the variable condenser for alignment on other points on the dial.

3. It should be noted that after the receiver is installed in a car that it is not necessary, when preparing to align the set, to remove the control head and cables from the dash. There is a dial card on the variable condenser that will indicate the alignment frequencies and settings.

GENERAL INFORMATION

To examine this receiver for any reason first remove the two screws holding the cover. The speaker which is mounted on this cover will be removed at the same time allowing further inspection of the tubes and radio. The radio, being designed in two parts, having a pair of wire connectors from the chassis itself to the self contained power unit, can be removed from the case by first taking out the power unit.

The power unit has been very carefully designed to avoid any vibrator "Hash" from being picked up. Due to the exceptional sensitivity of the radio this interference must be kept at a minimum and it is advisable that the cover on the power unit be making good contact to the box. Tighten the cover by bending the flanges inward slightly. Also be sure that the .006 Mfd. 1600 Volt condenser across the vibrator is not open.

It is important that the chassis and power unit make contact to the inside of the receiver case. In addition it is advisable that the paint be removed from under the various bolt heads on the outside of the case that are holding power unit.

Harmonics of the I.F. may be noticed when the chassis is being serviced outside its case. This is a normal condition and will not be present when the set is in actual use.

NOTES ON THE ELIMINATION OF UNUSUAL NOISE CONDITIONS OCCURRING IN THE INSTALLATION IN CERTAIN CARS ARE GIVEN IN SECTION IX OF THE INSTRUCTIONS THAT WERE SENT WITH THE RECEIVER.

Car interference can be fed into the receiver through the flexible control cables, and it is suggested that these cables be bonded. Also see page 6 to this instruction book regarding the use of a shield bracket mounted over the tuning shaft coupling on the set.

In some types of installations (Usually inverted mountings) some receivers may experience extreme loss of sensitivity. If the 2nd I.F. transformer (#8532 as shown on can) does not respond to alignment, it should be replaced with a new type. This condition in the I.F. transformer is caused by the position of the iron core being affected by heat generated within the chassis, and is usually indicated by the softening of the wax within the transformer. The new type I.F. transformer (Part #8542) eliminates this difficulty.

WHEN REPLACING THE 2ND.I.F. UNIT FOR THE REASON AS DESCRIBED ABOVE, IT IS OF COURSE NECESSARY TO READJUST THE TRIMMERS TO 465 KC. WHEN MAKING THE ADJUSTMENT ON THIS UNIT AND LIKEWISE WHEN RE-TRIMMING THE 1ST. I.F. STAGE BE SURE NOT TO PULL THE PLATES TOGETHER TOO TIGHT AS THIS MAY BEND THE PLATES PERMANENTLY OUT OF SHAPE AND THEY WILL NOT SPRING BACK WHEN THE SCREW IS TURNED IN THE OTHER DIRECTION. IN THIS EVENT PEAKING OF THE TRIMMERS WOULD NOT BE OBTAINED, AND THE UNIT WOULD HAVE TO BE REPLACED.

ADDITION OF NEW SPECIAL TUNING CABLE SHIELD (3132) TO ELIMINATE EXCESSIVE IGNITION INTERFERENCE. IN MODEL HA6 SERIES 1.

In Ford 1936 V-8 and other automobiles where an excessive amount of ignition noise is present, the bracket described should be used in conjunction with a new type of shield (No. 3132). Both the bracket described and the new type shield described here are necessary for best noise elimination. The bracket and shield need not be ordered for models number above 5000 (series 2).

The new tuning cable shield (3132) will be supplied "No Charge" together with a screw used to fasten it over the tuning cable opening.

SERVICE FIRST AID
EVERY GOOD SERVICEMAN CHECKS TUBES AND THE ANTENNA SYSTEM FIRST.

DEFECT	GENERALLY CAUSED BY	REMEDY
QUALITY POOR	After Checking Voltage, Tubes and Vibrator; Check .02 Condenser in the plate circuit of the 75 tube which may be open	Change if necessary
	Speaker Cone off center	Adjust or change speaker
DEAD RECEIVER	Blown Fuse, Defective Off-On Switch, Open Voice Coil or Speaker Transformer	Check
	Defective Vibrator, Blown Condenser, Open Coil Winding	Check "B" Voltage
LOW VOLUME INSENSITIVE	Poor Antenna System, Receiver not aligned, Speaker Field Coil shorted	Check
	Bad. I.F. Transformer having lost its gain due to the softening of the wax and the shifting of the iron core coupling	Change to new type I.F. (# 8542 on can)
AUDIO OSCILLATION OR HOWL	Possible open .006 in plate circuit or 4M	Change if necessary
	Variable Condenser not floating freely in its rubber mountings	Free Condenser
RADIO FREQUENCY OSCILLATION	Open C6 bypass condenser .1 Mfd. 400 volt in B - Circuit	Change
	The grid lead between the mixer tube 6L7 and the variable condenser may be too close to the Antenna Stage of the variable condenser (Top Section)	Push lead away
OFF CALIBRATION	Set not properly aligned	Check
	Dial hand not set to maximum line when condenser is at full capacity	Reset screw on bank or drive head
SET NOT SELECTIVE	Check Alignment, especially the I.F. stages.	
SLIPPING OF THE VOLUME CONTROL SHAFT	Cable may not be meshed with slot in control shaft due to cable not being far enough in the coupling, or volume control bracket may be bending back at an angle which does not allow the control to meet the shaft slot.	Correct as described

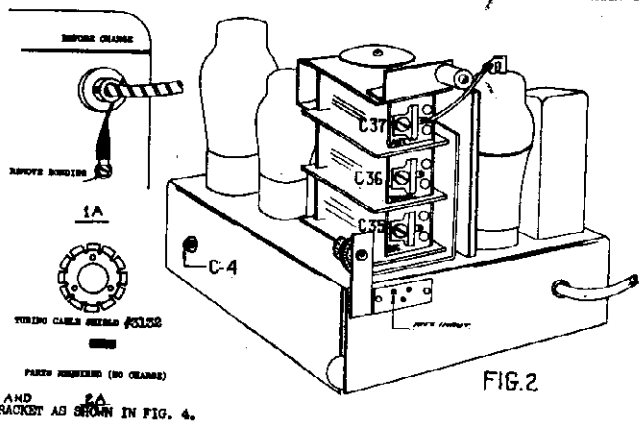

FIG.2

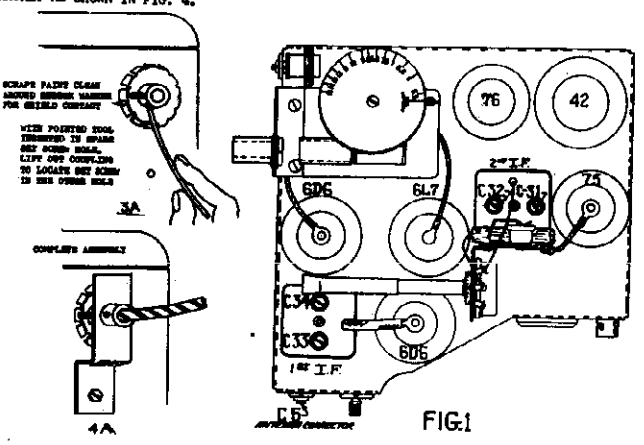

FIG.1

©John F. Rider, Publisher

HOWARD RADIO CO.

MODEL HA-6
Early
Installation Dat
Noise Notes

ATTENTION FORD OWNERS

No distributor suppressor can be used on the Ford V8. These Models require a special type of distributor condenser which can be secured from your local Ford Dealer. This special distributor condenser bolts to the frame of the distributor and the wire lead connect to the red wire from the distributor.

VII — HOW TO OPERATE THE RADIO CONTROLS

1. ON-OFF SWITCH & VOLUME CONTROL

Turning the small control knob to the right will cause a faint click and the dial will become illuminated. Wait about a minute for tubes to become heated before tuning in stations. When absent from car, operation may be prevented by pulling this knob out. Further rotation to the right increases the volume and to the left decreases it. Before making the final desired adjustment, the station should be tuned in as outlined in the following paragraph.

2. STATION SELECTOR DIAL & CONTROL

This receiver will tune in stations operating on frequencies from 540 to 1500 kilocycles. The dial figures with the ZERO omitted, indicate these frequencies. As the station selector control is rotated to the left or right, the red pointer on the dial will indicate the frequency of the station tuned in. (Refer to Figure 9) The correct "tuned in" spot for any station on the dial is the point of clearest reception where no swish is heard on either side.

3. TONE CONTROL

This knurled thumb wheel is in position to give the most brilliant reproduction when turned completely to the right. When turned toward the left the reproduction is less brilliant and more mellow. This should be adjusted to the taste of the person using the radio. Less interference will be experienced when in the mellow position.

VIII — FINAL ADJUSTMENTS

(REFER TO FIGURES 9 AND 9A)

DIAL POINTER ADJUSTMENT

1. Rotate the station selector knob completely to the right. When this is done, the red pointer may or may not be completely around. This is normal. Do not force the selector knob.
2. Locate the red pointer adjustment screw as shown in Fig. 9A and turn it with a small screw driver until the red pointer is opposite the black line shown in Fig. 9. When this is done, the red pointer will indicate station frequency accurately.

ANTENNA BALANCER

First, tune in a weak station at or very near to 600 KC on the dial. Second, without changing any other control, insert a small screw driver into the antenna balancer screw shown in Figure 10 and turn it either to the left or right until the volume of the station is at its maximum point.

If a signal generator is used do not attempt to connect to the antenna of car but instead allow some means for signal to radiate (wild) by attaching a small piece of wire to signal generator output terminals. Attention is again called to the fact that a VERY weak signal must be used for this adjustment.

IX — CAUSES AND REMEDIES FOR UNUSUAL NOISE CONDITIONS

Any ignition noise that might remain will always be more noticeable when no station is tuned in. This is due to the fact that the automatic volume control feature of this receiver is exceptionally good. Sensitivity automatically becomes greater when no station is heard.

IF THE INSTALLATION OF THE STANDARD SUPPRESSOR EQUIPMENT AS GIVEN IN SECTION 6 DOES NOT REMOVE OBJECTIONABLE NOISE THE FOLLOWING ITEMS MAY BE OF ASSISTANCE:

1. Spark plug suppressors as illustrated in Figure 1. may be necessary. These suppressors are rated at 15,000 ohms and are available from the retail stores, or may be ordered from the factory.

CONTINUED ON NEXT PAGE

2. On the motor side of the partition scrape clean all rust, dirt, and paint around those holes until bright metal shows.
3. The bolt heads shown in Figure 4) used to mount the plate in the driver's compartment are of a type that fit into the sides of the mounting plate. Insert these bolts in their proper holes, fit them into their slots, and then tap them lightly with a hammer to force the bolts through the partition holes. The nuts may then be attached on the motor side and drawn up tightly.
4. To fasten the receiver to the mounting plate, locate the two holes that are the furthest from the head of the receiver and fit them into the pointed ears on the mounting plate. Swing the receiver into this position by tightening the wing screws on the opposite side of the mounting plate. The complete mounting details are shown in Figure 4A.

SPECIAL NOTE ON MOUNTING RECEIVER

Late model General Motors and Chrysler Corp. automobiles may not require drilling of the partition. These cars usually have knock-out slugs provided in the partition to correspond with certain holes in the mounting plate. It is only necessary to locate these slugs and punch them out from the motor side.

To mount the receiver right side up in General Motor cars, use holes numbered 6 and 7 as shown in Figure 4, or holes numbered 6 and 7 for inverted mounting.

To mount the receiver right side up in Chrysler Corp. automobiles, use holes numbered 1 and 4 as shown in Figure 4, or holes numbered 5 and 8 for inverted mounting.

SPECIAL NOTE ON MOUNTING CONTROL HEAD

The beauty of the installation may be increased and drilling avoided by using a special plate to mount the Control Head on the dashboard of late model cars. These plates are provided in the dashboard of late model cars. These plates are provided in the dashboard kit, if available for your car, will fit. Information regarding special plates is available in the retail stores. Complete instructions are included.

V — ELECTRICAL CONNECTIONS

Refer to Figure #6. Wire lead #1 is a two section wire with the fuse located between the two sections. Connect this wire to a terminal on the ammeter having only one lead already attached. Make this connection short, direct, clean, and tight, using only the required amount of wire and cutting off any not required.

Connect lead #2 as shown by inserting the plug attached to the black wire from the receiver into the socket of the wire from the control head. Press the two sections together firmly and twist to the right.

Cable #3 has a metal braid covering with a three prong plug at one end, to be inserted in the receiver as in Figure 6. The other end has a blue and black wire together with an extension of the shield (Pigtail). Connect these wires to the car's antenna system as follows:

1. If an antenna was located coming from the corner post of the car, it will probably have an inner wire covered with metal braid. (If it has a plug at its end, cut the plug off). Scrape clean and solder the blue wire of the receiver's antenna lead to the inner wire of the antenna lead in from the car. Be certain these inner wires do not at any time touch the outer shield. See Figure 6
2. After the connection has been soldered clean and connected, cover the joint carefully with tape. See figure 7 below.
3. Connect the pigtail of the receiver's antenna wire to the braid of the antenna lead-in from the car. Wrap the pigtail as shown in figure 8 below and solder it with resin core solder. Do not hold the hot soldering iron long enough to melt the wire when making the connection. Connect the black wire to the dash compartment spot on the car's frame or dash board by use of solder or a bolt. This connection must be clean and tight.

VI — HOW TO ELIMINATE CAR NOISE

IMPORTANT:- IT MUST BE UNDERSTOOD THAT IT IS NOT NECESSARY TO ATTACH A FILTER CONDENSER FROM ONE SIDE OF THE AMMETER TO GROUND, AS IS NECESSARY IN MOST RECEIVER INSTALLATIONS, THIS FILTER IS A PART OF THIS SET ITSELF.

THE GENERATOR

Clamp and connect the generator by-pass condenser to the generator frame and the cut-out as shown in Figure 11, below. Be sure that all paint and dirt are scraped away from the spot where the condenser is mounted so that it makes perfect connection to the metal. Use any of the available screws on the generator to mount the condenser.

In some cases, interference will be reduced by connecting the condenser lead to the opposite side of the cut-out. The most suitable position for this lead must be determined by trial.

THE DISTRIBUTOR

Connect the distributor suppressor resistor in the center wire of the distributor by cutting the lead and screwing each free end into the ends of the suppressor. See Figure 12, below.

I — LOCATING AND INSTALLING THE ANTENNA SYSTEM

II — HOW TO CHECK POLARITY

When the receiver leaves the factory it has been adjusted for use on cars that have the Positive (+) terminal of the storage battery connected to the frame of the car as shown in Figure 5, below. Observe your battery connections. If they are connected as shown in Figure 5, no polarity change is necessary.

BEFORE THE STORAGE BATTERY BE CONNECTED IN THE CAR AS SHOWN IN FIGURE 5A, THE POLARITY OF THE RADIO SET BE CHANGED AS FOLLOWS:

1. Remove the four screws around the cover of the radio housing. These screws are on the four sides of the speaker opening.
2. Carefully remove cover.
3. Looking into the radio interior, a copper plated bar will be seen on the right. This bar has a thumb screw in the center, which should be removed. Remove the cover of this box.
4. At the top of the box a round unit will be seen marked (+) Pull this unit out of its socket.
5. Rotate this unit until the markings are reversed opposite to their position when found. The correct position of the positive and negative markings are shown in Figure 5A.
6. After complete reassembling the receiver is ready to be installed.

III — HOW TO MOUNT THE RECEIVER

Select a position on the partition (between the motor and driver's compartment) that will not interfere with any of the car's controls. The position where the control head is to be mounted on the dash board must also be considered (read Section IV on Mounting Control Head) due to the need of having the control head cables run to and reach the radio with as few bends as possible. The receiver may be mounted right side up or inverted in order to secure the best position. (See receiver and control cables in figure 11.

When the position of the receiver is ready to be installed.

IV — HOW TO MOUNT THE CONTROL HEAD

Inspect the flexible cable shown as "b" in Fig. 5 into the coupling of the receiver having a rubber collar around it. To do this remove one of the tuning controls on the control head until the flat metal section on the end of cable "b" revolves and seats itself firmly into the coupling. Then tighten the set screws on the collar securely.

When the position for the receiver mounting is selected, proceed as follows.

1. Hold the mounting plate (shown in Figure 4) in the exact position desired and mark the two of the nine holes shown that will be convenient to drill with a 3/8" drill. (a small drill should first be used to start the drilling). IF YOU HAVE A LATE MODEL GENERAL MOTORS CAR, SEE SPECIAL NOTES ON MOUNTING THE RECEIVER BEFORE DRILLING.
2. BEFORE ATTACHING CABLE "c", FIRST:- REACH THROUGH COUPLING (TEE ONE WITHOUT THE RUBBER COLLAR AROUND IT) WITH A NARROW SCREW DRIVER AND ROTATE THE VOLUME CONTROL SHAFT AS FAR TO THE LEFT AS IT WILL ROTATE. (SECOND):- TURN THE KNOB OF THE CONTROL HEAD AS FAR TO THE RIGHT AS IT WILL ROTATE.

   THIRD:- INSERT THE FLEXIBLE SHAFT INTO THE COUPLING, TURNING IT VERY SLIGHTLY IF NECESSARY TO LOCATE THE FLAT PORTION INTO ITS SLOT.

   FOURTH:- AFTER TIGHTENING THE SET SCREW IN THE COUPLING, ROTATE THE KNOB ON THE HEAD TO THE LEFT UNTIL THE SWITCH SNAPS. THIS SHAFT ASSEMBLY IS THEN COMPLETE.
3. Slide the control head to a position on the edge of the dashboard. Holding the control head, shift its location slightly to the left or right until you find a position where the cables will not interfere with other car controls.
4. When this position is determined, mark the locations for the two mounting holes as shown by "g" in Fig.6. Drill these two holes with a 3/16" drill and bolt the control head into its permanent position.

©John F. Rider, Publisher

2. More motor noise will be noticed when the "A" lead is connected in such a way that the receiver current flows through the ammeter.

In many stubborn cases of motor noise trouble it may be advantageous to connect wire #1 shown in Figure 5. to the hot terminal of the starter switch rather than the ammeter terminal. In this case it will be necessary to splice a piece of wire to the end of one furnished. Use a wire no smaller than #12 with good insulation and solder well at splice, also make as short as possible. Should it be necessary to run wire through bulk-head or metal floor boards use a heavy piece of loom insulation to prevent cutting through insulating battery wire.

3. If the low tension wire between the ignition coil and the distributor runs parallel and near to the high tension leads, it must be changed. Run a new wire in its place keeping it as far removed from the high tension leads as possible. It is desirable to run it along the car chassis channels.

4. Check the high tension leads in the distributor and be sure there is no sparking between the ends of the wires and their contacts in the cap. This means that the wires must be pushed all the way down in the cap and leave no gap. Sparking from any of the high voltage leads to ground at any point means noise in the radio.

5. It is sometimes helpful to shield the center high tension lead from the distributor to the bulk-head but if this is done a piece of sleeving or tubing at least 1/2" in diameter must be placed over the wire below the shield is put on as the high voltage otherwise will spark through if the shielding is too close to the wire.

6. In certain cases, interference will be reduced still further by connecting an additional filter condenser ½ Mfd. 200V between the battery side of the ignition coils and the car frame.

7. Excessive gap between the distributor and high tension contacts, also fouled plugs with improperly adjusted gaps are sources of trouble. In other words the whole ignition system should be kept in good condition.

8. Any metal tubes or rods, such as windshield tubing, gas and oil lines, throttle and spark control cables, free wheeling cables, etc., that pass through the dash or bulk-head, should have a piece of heavy copper braid soldered to them and the other end of this braid fastened to the motor side of the bulk-head by means of self threading screws. These pieces of copper braid should be made as short as possible.

9. In some cars the ignition coil or leads come very close to the motor side of the toe board. As a result, interference is picked up by the occupants' body and transferred to the antenna in the roof of the car. Trouble of this sort can often be detected through the fact that the noise increases if the person sitting along side of the driver reaches his hand up to the roof of the car. It can be remedied by tacking a metal plate or screen to the motor side of the toe board or by placing the screen between the floor matting and the toe board. Then connect a piece of wire from this screen to an adjacent metal part of the car or else pass one of the screws that hold the toe board down, through the screen so that it makes an electrical connection to the cap-frame or body.

10. Very often interference may be fed into the antenna through the dome light wiring. This can be determined by disconnecting the dome light lead from the ammeter or lighting switch. If improvement results connect a condenser, of the same type as was used on the generator, to the dome light lead as near as possible to the point where the lead enters the corner post. Cut the insulation from the lead at this point and solder the wire from the condenser, tape the joint and ground the lug of the condenser can to the nearest point where a good connection to the car frame can be obtained. A small R.F. Choke connected in series with the dome light lead is preferred along with the use of the above mentioned condenser.

11. Make certain that the instrument panel has a good ground connection to the frame of the car. Also the motor block itself, especially in cars with floating power, should have 1/2" wide copper braid bonded from the engine block to the bulk-head, also bond engine to frame. Do not use ordinary wire. Make the leads as short as possible. In extreme cases the steering column has had to be bonded. Clamp down hood when testing for noise.

12. In stubborn cases a good grade mica .002 to .008 condenser connected across the breaker points will reduce interference. Whether or not the noise is being picked up by the antenna or through the chassis can be determined by grounding the antenna lead. If the noise continues it would be due to the interference being fed back through the frame of the car or through the storage battery to the receiver.

13. Wheel or brake noise is probably the most peculiar type of interference and is due to the accumulated static charge. This type of interference is very noticeable while the car is in motion and could very easily be confused with ignition interference. Check for this with the car running at a good speed, turn the ignition switch off and if the noise continues it is due to either this wheel static or a loose electrical connection. To overcome the wheel static condition use graphite grease in the wheel bearings or insert grounding springs in the hub caps. In the case of external brakes, it is necessary to ground the brake bands to the frame of the car.

14. Loose connections are a frequent cause of interference. Make certain that light bulb contacts are clean and that they fit tight in their sockets, and that all battery cable connections are tight and well grounded.

15. In cases, such as the V-8 Fords, it is necessary to pull battery and primary leads out of the special tube which houses high tension leads, shield and ground the shielding of these leads.

16. Accessories such as lighters, electric motor heaters, etc., are often sources of interference. Try a condenser from ground to these various accessories until the interference is located and eliminated.

17. Ignition noise should, if possible, be checked in a location that is free from electrical disturbances such as power lines, electrical equipment, neon signs, street car and elevated lines. This receiver is a very sensitive instrument and will pick up over its antenna system electrical disturbances in its immediate vicinity.

X — HOW TO KEEP RADIO IN GOOD OPERATING CONDITION

1. GENERATOR CHARGING RATE

If the receiver is used very much, and the car has other electrical accessories, such as cigar lighter, spot light, electric windshield wiper, heater, etc., it may be advisable to compensate for the additional drain of the battery by advancing the generator charging rate. This is especially advisable, if the car is driven more at night, when the lights are used, than during the day. If you are not familiar with the method of adjusting the charging rate of the generator, have it done by a competent service station. It is important that the charging rate never be advanced beyond the value specified by the car manufacturer as safe. Failure to observe this precaution may result in a burnt out generator.

2. TO CHANGE THE DIAL LIGHT pull straight out on the dial bulb holder from the back side of the control unit. Replace with a bulb of the same type, 6 volt bayonet socket type.

3. TO CHANGE THE FUSE grasp both ends of the metal container, pushing inward and twisting at the same time. The short end may then be pulled out to remove the 15 ampere fuse. When replacing be sure that the fibre lining is in place around the fuse itself.

4. Inspect all installation connections at frequent intervals to assure yourself that they are tight and clean. This is important.

XI — SERVICE NOTES

THE WIRING DIAGRAM AND REPLACEMENT PARTS LIST will be found inside the set on the side of the power unit case, likewise on the back page of these instruction sheets.

TUBE REPLACEMENT. Remove the front cover to get to the tubes. Also when the cover is removed, a layout diagram will be visable on top of the chassis showing the position of the tubes. (Pull out the speaker plug to avoid damaging the speaker).

For convenience in removing tubes it is suggested that a screw driver be used to pry up on the edge of the tube bases and also that the tubes be removed in the order hereby given:

1st. remove - 6D6 - I.F.
2nd. " - 6L7 - Mixer
3rd. " - 6D6 - Antenna
4th. " - 76 - 1st. Audio
5th. " - 42 - Output
6th. " - 76 - Oscillator

THE TUBES THEREFORE SHOULD BE REPLACED IN THE OPPOSITE ORDER IN WHICH THEY WERE REMOVED.

TO REMOVE THE CHASSIS for any reason, after removing the cover, the power unit (the rectangle box) must be removed first by taking out the three screws holding the unit to the end of the case. Next unfasten the two bayonet connections leading to the chassis. Next remove the two screws from the bottom of the case holding the chassis. Disconnect the two flexible cables, pull out the antenna plug, unhook the "A" wire connector (running between the set and the control head) then the set can be removed.

XII — REPLACEMENT PARTS LIST

THESE AUTHORIZED REPLACEMENT PARTS MAY BE ORDERED THROUGH THE RETAIL STORES. LIST PRICES SHOWN ARE SUBJECT TO CHANGE WITHOUT NOTICE.

WHEN ORDERING, USE PART NO. AND DESCRIPTION SHOWN ON THIS LIST REGARDLESS OF NUMBER PRINTED ON PART ITSELF. FOR ALL ORDERS OR COMMUNICATIONS REGARDING THIS RECEIVER ALSO MENTION CHASSIS NO.

WHEN NO PART NUMBER IS ASSIGNED ORDER BY DESCRIPTION AND RATING

Part No.	Schematic Location	Description	List Price
7801		Bias Cell - 1 Volt	.20
5600		Cable - Flexible drive with fittings	.35
5552		Cable - Antenna	.50
5530A		Cable - "A" Battery with fuse holder	.50
5553		Cable - Battery and B + lead (inside set)	.52
5531		Short "A" lead (extending from set)	.35
5554		Long "A" lead (extending from drive head)	.50
4302	L11	Choke - filter (power unit)	.28
8521	L1	Coil - Antenna, complete assembly	.85
8524	L2	Coil - Mixer, complete assembly	.85
8525	L3	Coil - Oscillator, complete assembly	.85
8526	L4	Coil - Antenna input choke	.85
8527	L5	Coil - Filament choke	.85
8528	L6	Coil - Ignition choke	.85
8529	L7	Coil - Vibrator primary choke	.85
8530	L8	Coil - B + Choke	.85
8531	L9	Coil - 1st. I.F. Assembly	1.50
8532	L10	Coil - 2nd. I.F. Assembly	1.50
8181	C1 C2 C5	Condenser - variable tuning	3.50
8235	C4	Condenser - Padding 2 stud mounting	.28
8224	C5	Condenser - Padding, single mounting	.28
	C6	Condenser - .1 Mfd - 400 volt	.20
	C7	Condenser - .5 Mfd - 50 volt (power unit)	.40
	C8	Condenser - .5 Mfd - 120 volt	.40
	C9	Condenser - .5 Mfd - 50 volt	.36
	C10 C11 C12	Condenser - .02 Mfd - 200 volt	.18
	C13 C14	Condenser - .02 Mfd - 400 volt	.20
	C15 C16 C17	Condenser - .05 Mfd - 200 volt	.18
	C18 C19	Condenser - .05 Mfd - 400 volt	.20
	C20	Condenser - .005 Mfd - 1600 volt	.36
	C21	Condenser - .006 Mfd - 400 volt	.20
	C22	Condenser - .0015 Mica	.16
	C23	Condenser - .0003 Mica	.16
	C24	Condenser - .0005 Mica	.12
8225	C25	Condenser - Dual 8 Mfd. - 350 volt	1.80
8225	C26	Condenser - 12 Mfd. - 25 volt	.60
		Condenser - .5 Mfd. - 200 volt (can Type for Generator)	.40
8226	R18	Control - volume	.20
8225	R19	Control - tone	.75
4668		Coupling - insecup on vari. cond.	.12
6103		Coupling - male for wire leads	.20
6102		Coupling - female for wire leads	.20
		Dial Card - calibrated	.28
5717		Dial Plate	1.15
3435	F1	Fuse - 15 ampere	.30
7904		Fuse - insulating tube	.04
460		Grid cap - large	.04
9012		Grid cap - metal tube	.04
7808		Grommet - Large rubber - 1/8" ID	.04
7108		Knob - volume control & switch	.20
7110		Knob - large control	.20
4108		Lamp - 6 volt pilot - bayonet type	.12
6480		Mounting Studs for Mtg. plate	.12
9004		Nuts for above	.12
756		Nut - thumb, round, knurled (power unit)	.04
8681		#8 P.K. Screw - hex head 1/4" long	.04
742		#8 P.K. Screw - hex head 3/8" long	.04
888		#6 P.K. Screw - hex head 1/4" long	.04
855		8-32 Headless set screw 1/8" long (couplings)	.04
8418		Cover Screw (Power Unit)	.12
4668		Cable anchor bushing (var. condenser)	.08
4669		Cable anchor bushing (volume control)	.08
880		#8 washer 1/2" OD	.04
8421		Wing screw - 8/16 - 18 x 3/8" long	.06
7064		Wing screw Washer	.06
	R1 R2	Resistor - 100 ohm 1/3 Watt - Moulded bakelite	.12
	R3	Resistor - 300 ohm 1/3 Watt - Moulded bakelite	.12
	R4 R5	Resistor - 500 ohm 1/3 Watt - Moulded bakelite	.12
8565	R6	Resistor - 600 ohm 1/2 Watt - Wirewound	.15
	R7	Resistor - 2000 ohm 1/3 Watt - Moulded bakelite	.12
	R8	Resistor - 10M ohm 1/3 Watt - Moulded bakelite	.12
	R9	Resistor - 10M ohm 1 Watt - Moulded bakelite	.16
	R10	Resistor - 25M ohm 1/3 Watt - Moulded bakelite	.12
	R11	Resistor - 300M ohm 1/3 Watt - Moulded bakelite	.12
	R13 R14 R15	Resistor - 500M ohm 1/3 Watt - Moulded bakelite	.12
	R16 R17	Resistor - 1 megohm 1/3 Watt - Moulded bakelite	.12
		Resistor - 1SM ohm (Distributor suppressor)	.25
4188		Remote control head (for under-dash mounting)	6.50
4018		Worm drive - replacement unit (var. cond.)	1.40
8746		Socket - 9 prong	.14
8008		Socket - 9 prong	.16
8745		Socket - 5 prong	.14
87444		Socket - 4 prong - phenolic	.26
8005		Socket - 3 prong - antenna	.08
8014		Socket - vibrator	.12
8917		Speaker - 6 inch.	4.80
4281	T2	Speaker transformer - Specify if Jensen or Rola	1.80
4206	T1	Transformer - power	8.80
6551		Tube Shield assembly	.26
5632		Tube Shield ground clip	.12
9600		Vibrator - (synchronous)	5.20
5060		Main Mounting Plate	2.50

©John F. Rider, Publisher

HOWARD RADIO CO.

MODEL HA-6
Early
Installation
Data

©John F. Rider, Publisher

MODEL HA-6
Early
Installation Data

HOWARD RADIO CO.

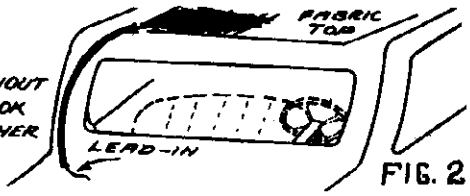

WITH CARS WITHOUT ALL METAL TOP, LOOK FOR LEAD-IN AT EITHER CORNER POST.

FIG. 2

FIGURE-3

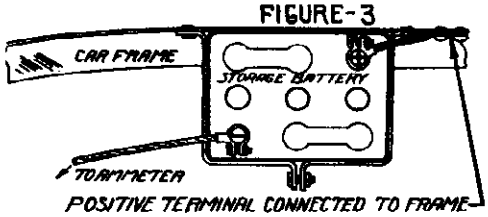

POSITIVE TERMINAL CONNECTED TO FRAME

NO POLARITY ADJUSTMENT NECESSARY WHEN STORAGE BATTERY CONNECTIONS ARE MADE TO CAR AS SHOWN HERE.

FIGURE-3A

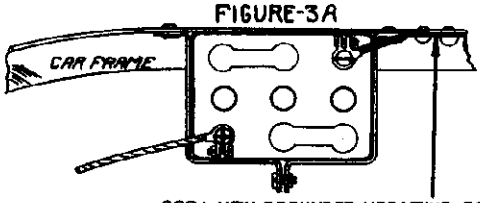

CAR WITH GROUNDED NEGATIVE AS SHOWN REQUIRES POLARITY CHANGE IN RADIO:-

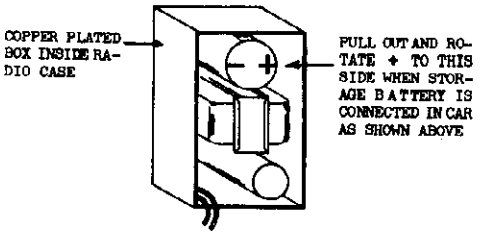

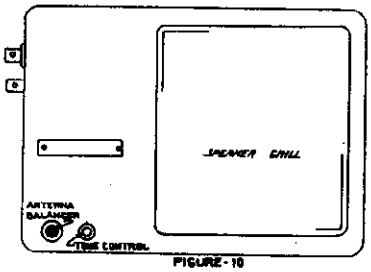

FIGURE-10

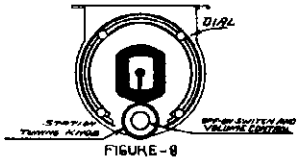

FIGURE-9

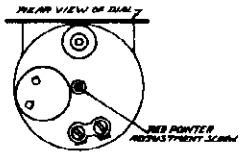

FIGURE-9A

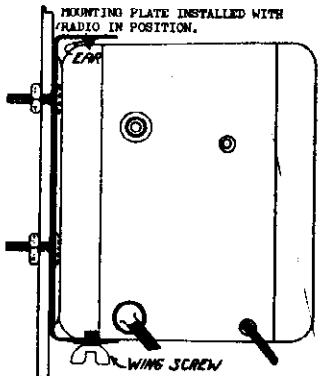

FIGURE-4A

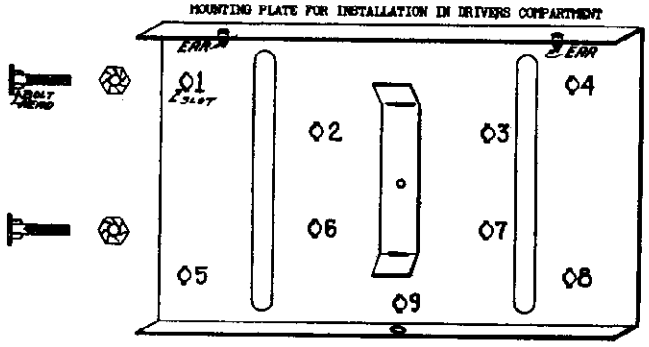

FIGURE-4

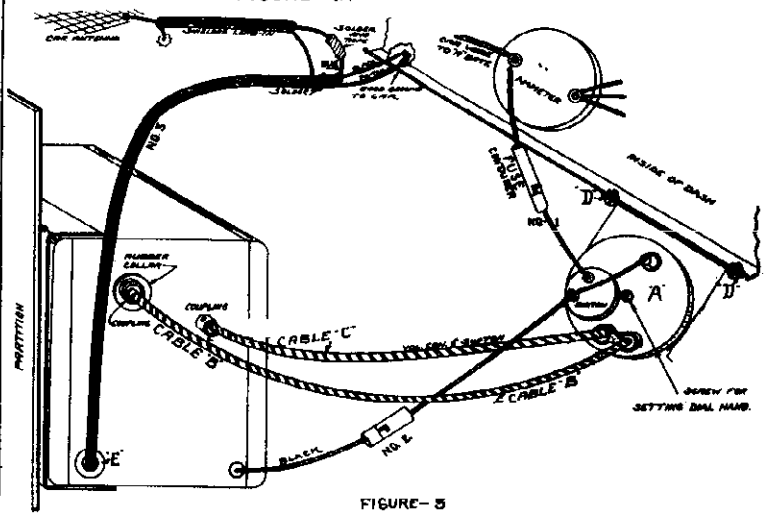

FIGURE-5

Insert Supressor very close to distributor cap.
FIG. 12

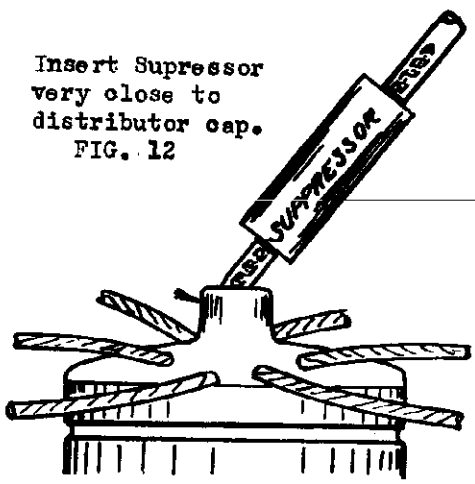

HOWARD RADIO CO.

MODEL HA-6
Late
Schematic, Voltage
Parts List

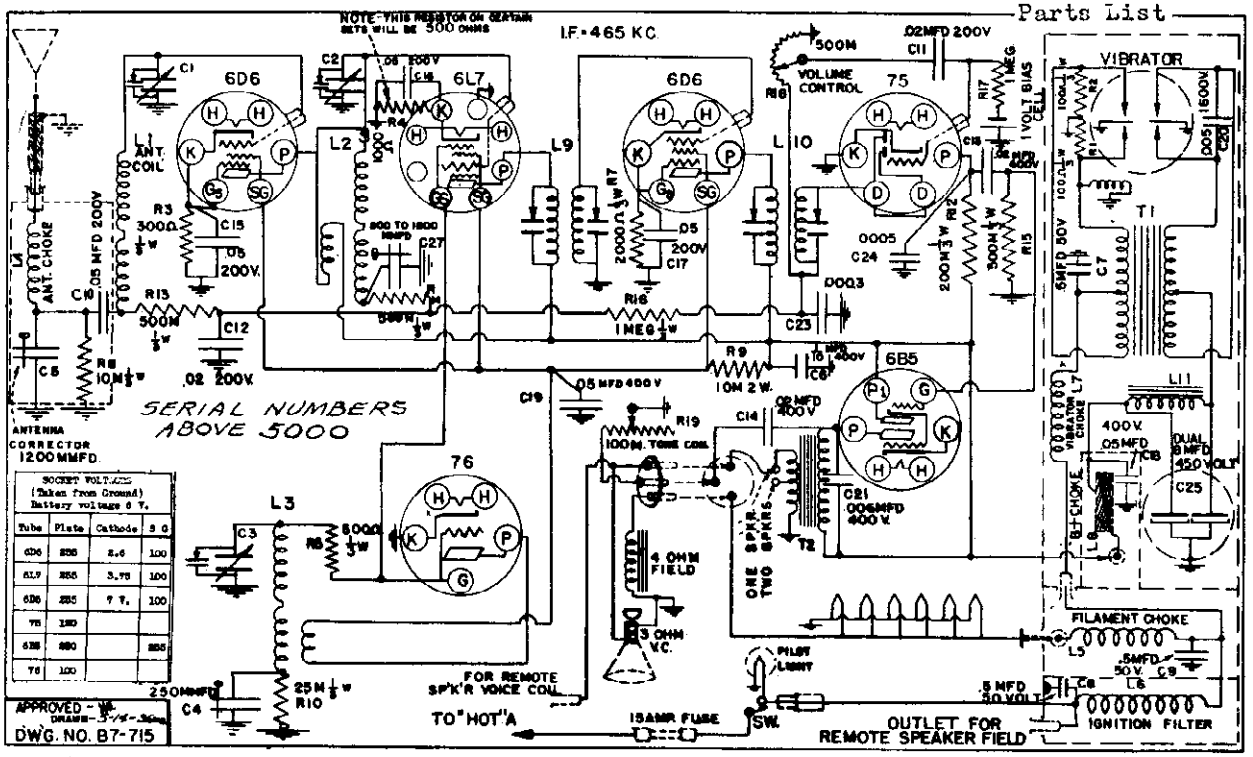

PRICES SUBJECT TO CHANGE WITHOUT NOTICE

REPLACEMENT PARTS LIST

WHEN ORDERING, USE PART NO. AND DESCRIPTION SHOWN ON THIS LIST REGARDLESS OF NUMBER PRINTED ON PART ITSELF. FOR ALL ORDERS OR COMMUNICATIONS REGARDING THIS RECEIVER ALSO MENTION CHASSIS NO. HA62.

Part No.	Schematic Location	Description	List Price
4302	L11	Choke - filter (power unit)	.92
8533	L1	Coil - Antenna, complete assembly	.85
8534	L2	Coil - Mixer, complete assembly	.85
8535	L3	Coil - Oscillator, complete assembly	.85
8536	L4	Coil - Antenna filter choke	.85
8527	L5	Coil - Filament choke	.85
8528	L6	Coil - Ignition choke	.85
8529	L7	Coil - Vibrator primary choke	.85
8537	L8	Coil - B + Choke	.85
8541	L9	Coil - 1st. I.F. Assembly	1.30
8542	L10	Coil - 2nd. I.F. Assembly	1.30
8122	C1 C2 C3	Condenser - variable tuning	3.50
6223	C4	Condenser - Padding 2 stud mounting	.28
8224	C5	Condenser - Padding, single mounting	.28
8225	C27	Condenser - Padding, single mounting	.28
	C6	Condenser - .1 Mfd.-400 volt	.20
	C7	Condenser - .5 Mfd.- 50 volt (power unit)	.40
	C8	Condenser - .5 Mfd.-120 volt	.40
	C9	Condenser - .5 Mfd.- 50 volt	.36
	C11 C12	Condenser - .02 Mfd.-200 volt	.16
	C13 C14	Condenser - .02 Mfd.-400 volt	.20
	C10 C15 C16 C17	Condenser - .05 Mfd.-200 volt	.16
	C18 C19	Condenser - .05 Mfd.-400 volt	.20
	C20	Condenser - .005 Mfd.-1600volt	.36
	C21	Condenser - .006 Mfd.-400 volt	.20
	C23	Condenser - .0003 Mica	.16
	C24	Condenser - .0005 Mica	.12
8826	C25	Condenser - Dual 8 Mfd. 450 volt	1.80
		Condenser - .5 Mfd. - 200 volt (can type for Generator)	.40
6227	R18	Control - volume (with coupling)	.90
6225	R19	Control - tone	.75
4668		Coupling - insacup on variable condenser	.12
6103		Coupling - male for wire leads	.20
6102		Coupling - female for wire leads	.20
1		Dial Card - calibrated	.28
5717		Dial Plate	1.15
3415	F1	Fuse - 15 ampere	.30
7904		Fuse - insulating tube	.04
460		Grid cap - large	.04
6012		Grid cap - metal tube	.04
7809		Grommet - Large rubber - 1/2" ID	.04
7109		Knob - volume control	.60
7110		Knob - tuning	.60
4106		Lamp - 6 volt pilot - bayonet type	.12
6420		Mounting Studs for Mtg. plate	.12
9006		Nuts for above	.12
6521		#6 P.K. Screw - hex head 1/4" long	.04
742		#8 P.K. Screw - hex head 3/8" long	.04
882		#6 P.K. Screw - hex head 1/4" long	.04
	R1 R2	Resistor - 100 ohm 1/3 Watt - Moulded bakelite	.12
	R3	Resistor - 300 ohm 1/3 Watt - Moulded bakelite	.12
	R5	Resistor - 500 ohm 1/3 Watt - Moulded bakelite	.12
	R4	Resistor - 1000 ohm1/3 Watt - Moulded bakelite	.12
	R7	Resistor - 2000 ohm 1/3 Watt - Moulded bakelite	.12
	R8	Resistor - 10M ohm 1/3 Watt - Moulded bakelite	.12
	R9	Resistor - 10M ohm 2 Watt - Moulded bakelite	.16
	R10	Resistor - 25M ohm 1/3 Watt - Moulded bakelite	.12
	R12	Resistor - 200M ohm 1/3 Watt - Moulded bakelite	.12
	R13 R14 R15	Resistor - 500M ohm 1/3 Watt - Moulded bakelite	.12
	R16 R17	Resistor - 1 megohm 1/3 Watt - Moulded bakelite	.12
		Resistor - 15M ohm (Distributor suppressor)	.25
6017		Plug and clutch assembly (used on connectors)	.25
6018		Plug - 3 prong male - (used on speaker wires)	.25
6016		Plug - (Tipjack with fibre head)	.25
4180		Remote control head (for under-dash mounting)	6.50
6018		worm drive - replacement unit (var. cond.)	1.40
6015		Socket - Female, single prong	.12
6020		Socket - 2 prong	.12
6019		Socket - 3 prong (speaker)	.12
2745		Socket - 5 prong	.14
2746		Socket - 6 prong	.14
6008		Socket - 8 prong	.16
6014		Socket - vibrator	.12
6918		Speaker - 6 inch.	4.50
4322	T2	Speaker transformer	1.80
4803	T1	Transformer - power	2.50
6331		Tube Shield assembly	.25
6632		Tube Shield ground clip	.16
9800		Vibrator - (synchronous)	3.30
3960		Main Mounting Plate	2.50

© John F. Rider, Publisher

MODEL HA-6
Late
Alignment, Socket
Trimmers, Speaker

HOWARD RADIO CO.

FIG. 10

FIG. 10-A

INSTRUCTIONS FOR USING ADDITIONAL REMOTE SPEAKER

If desired, this auto receiver may be also used with an additional remote loud-speaker. This speaker may be mounted in the area directly over the windshield or in any other locality convenient for mounting. Speaker Jack Holes used for connecting an additional speaker are shown in Fig. 10A. THESE JACK HOLES ARE USED ONLY WHEN AN ADDITIONAL SPEAKER IS INSTALLED.

For overhead mounting order Speaker #8822 with cable #5522.

For remote mounting elsewhere order Speaker #8825 with cable #5523.

When an additional remote speaker is used, observe the following instructions:

1. Remove the front cover and observe the position of the plug A as shown in Fig. 13. To use an additional speaker this plug must be removed from the socket it is in, and reinserted into the adjacent socket as indicated by the arrow in Fig. 13A.
2. Replace the cover. Insert the Red coated tip of the speaker cable into the Red coated Jack Hole as shown in Fig. 10A. Insert the other Plain tip of the speaker cable into the Jack Hole on the front of the receiver.
3. The entire length of speaker cable should be well anchored as it runs from speaker to receiver.

TO USE THE REMOTE SPEAKER ONLY

If it is preferred to have only the additional remote speaker operating it will be necessary to disconnect wires on the speaker within the set. This is done after removing the cover by unsoldering the copper braid lead running from the voice coil to ground and likewise the field wire which is at the same point. Tape these wires so they will not touch any metal part and become grounded. With this arrangement the Plug "A" (See Fig. 13-A) will remain as is in position for using one speaker.

FIG 13-A

FIG. 3

FIG. 4

FOR INSTALLATION AND OPERATING NOTES SEE MODEL HA-6(Early)

ALIGNMENT PROCEDURE

PRELIMINARY

Output Meter Connections (Copper Oxide Type Meter) . . . Across voice coil
Output Meter reading to indicate 1 Watt output . . . . . 1.73 Volts
Average Sensitivity in microvolts for 1 Watt output . . See chart below

Generator ground lead connection . . . . . Receiver Chassis
Dummy antenna value in series with generator output lead See chart below
Connection of generator output lead . . . . . See chart below

Position of volume control . . . . . Full on
Position of tone control . . . . . OFF (or treble position)
Position of dial card at Maximum Capacity . . . . . Max. Setting line

BAND NAME	POSITION OF DIAL POINTER	GENERATOR FREQUENCY	DUMMY ANTENNA	GENERATOR CONNECTION	TRIMMERS ADJUSTED (in order shown)	MICRO-VOLTS
I.F.Stage	540 KC	465 KC	.1 Mfd.	Trans Grid	C31 C32 C33 C34	1000
Regular	1400 KC	1400 KC	.0002	Ant. Lead	C35 C36 C37	2
Regular	600 KC	600 KC	.0002	Ant. Lead	C4 C5 C27	2

IMPORTANT ALIGNMENT NOTES

1. After adjusting the C4 oscillator padding condenser at 600 KC rotate dial back to 1400 KC and recheck the settings made on C35, C36, C37.

2. It will not be necessary to bend the plates of the variable condenser for alignment on other points on the dial.

3. The output meter mentioned above is connected across the voice coil and the voice coil is not opened.

4. It should be noted that after the receiver is installed in a car that it is not necessary, when preparing to align the set, to remove the control head and cables from the dash. There is a dial card on the variable condenser that will indicate the alignment frequencies and settings. Also it is possible to align the set without removing the chassis from the case. There are small holes in the case to reach all trimmers in the R.F. circuits. Likewise there is a spring button on the front cover that can be pulled out to allow examination and setting of the dial position.

5. INABILITY TO PEAK I.F. TRANSFORMER MAY BE DUE TO ABSENCE OF TRIMMER CAPACITY VARIATION, EVEN THOUGH TRIMMER SCREW TURNS. THIS OCCURS WHEN THE I.F. TRIMMER IS TURNED TOO TIGHT, CAUSING THE PLATE TO BECOME PERMANENTLY SPRUNG.

The performance of any radio depends on the careful installation of the antenna. Never attempt to take an aerial to the inside roof of a car having an all metal top or a car that has woven wire between the inside lining and the roof.

In the event the car does not have any antenna or if the car is of the all metal roof type (in which a roof antenna will not work), we suggest the use of one of the standard undermount types for mounting under the car. For best results the antenna such as the rod type should be covered with moulded rubber which will eliminate the possibilities of short circuits. Two point suspension and adjustable bracket simplify installation.

NOTE: WHEN INSTALLING THE UNDERSLUNG TYPES OF ANTENNAS ON SOME CARS IT MAY BE FOUND NECESSARY TO REDUCE INTERFERENCE NOISE BY SHIELDING THE LEAD-IN ALL THE WAY FROM THE ANTENNA TO THE RADIO. THIS IS DONE BY USE OF A SPECIAL SHIELDED SLEEVING OBTAINABLE AT ANY RADIO SUPPLY STORE. THIS SHIELDED SLEEVING MUST BE OF THE LOW CAPACITY TYPE AT LEAST OF 5/8" DIAMETER. See Fig. 1A.

ANTENNA BALANCER

First, tune in a weak station at or very near to 600 KC on the dial. Second, without changing any other control, insert a small screw driver into the antenna balancer screw shown in Figure 10 and turn it either to the left or right until the volume of the station is at its maximum point.

©John F. Rider, Publisher

MODEL 47-A
MODEL 50
MODEL 50-S
Schematics
Voltage

HOWARD RADIO CO.

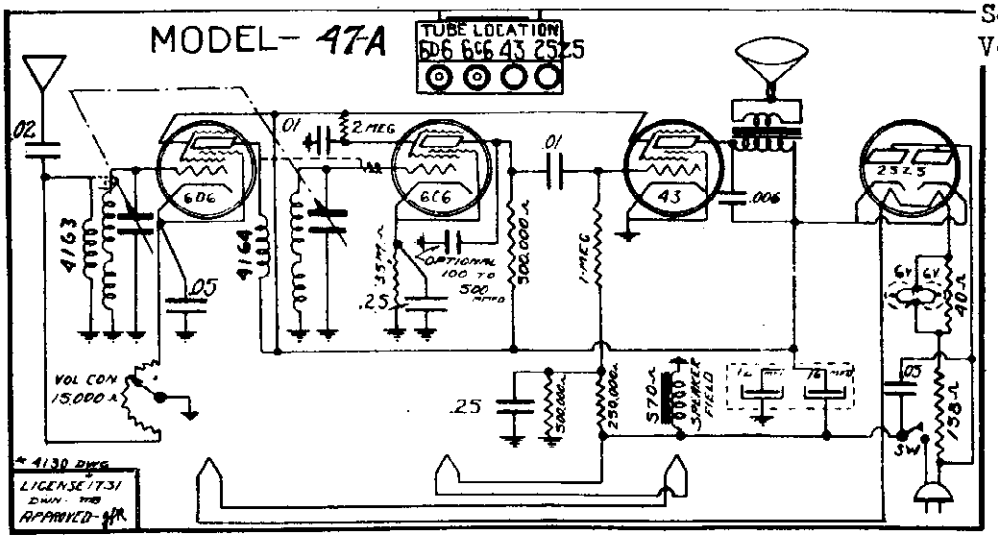

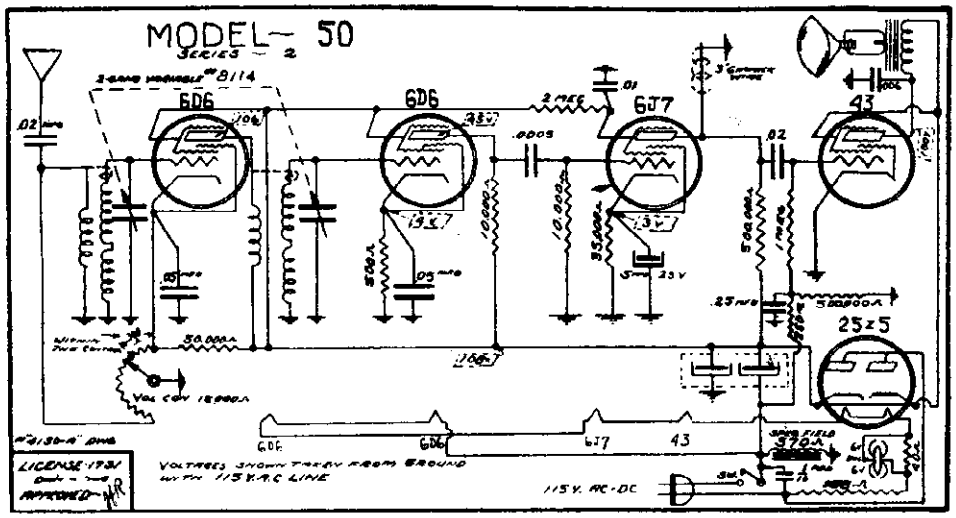

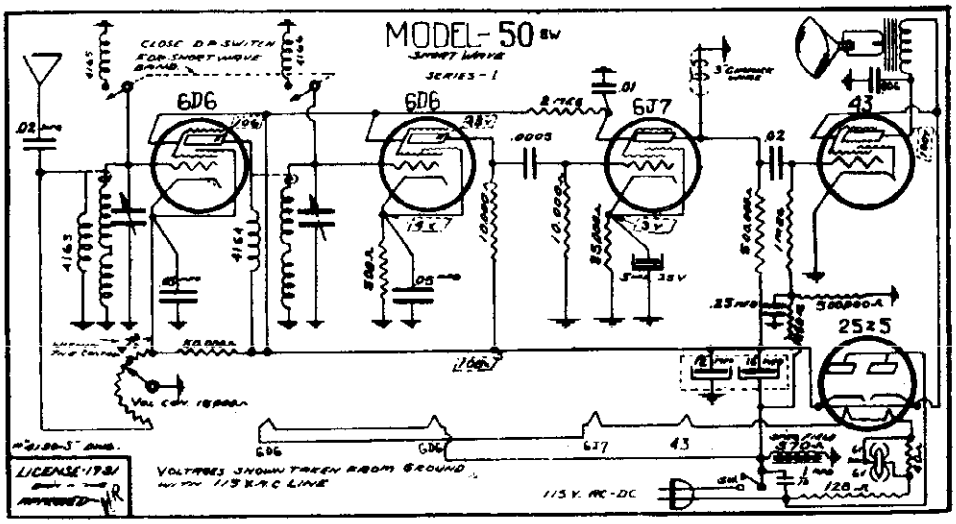

©John F. Rider, Publisher

SERVICE NOTES

1. The various voltages at the sockets are shown on the schematics. These are taken from ground with a high resistance voltmeter with line voltage at 115 volts. For Model 47-A the voltages will average as follows.

	Plate	S.G.	Cathode	
6-D-6	110V	112V	15V with Volume at Minimum	Cont.
			3V with Volume at Maximum	Cont.
6-C-6	30V		3V	
43	105	112V		

2. The two trimmers on the variable condenser are aligned at 1400 KC on Models 47A, 50 and 50SW.

3. When the variable is at full maximum capacity (all the way to the right) the dial hand should be set above the horizontal dividing line about 1/8" or so that the opposite end of the pointer is on 1700 KC. The hand is adjusted by the set screw and collar on the variable condenser shaft.

4. Should the chassis be serviced at any time it is important to check the position of the pilot light socket brackets and be sure they do not touch the speaker cone on the edges or at any point. They should be in such a position so as to not be forced against the cone by the cabinet panel when installed back in cabinet.

5. The pilot light leads running from the sockets to the resistor should be kept high and away from all nearby wires to avoid pick-up hum.

6. On Model 50SW the short wave range is attained by use of shunt coils with the regular R.F. secondaries.

REPLACEMENT LIST -- Models 47A-50-50SW

Part No.	Description PRICES SUBJECT TO CHANGE WITHOUT NOTICE	Price
4163	Coil - Antenna	1.18
4164	Coil - R.F.	1.18
8106	Condenser - Two Gang for Model 47A only	2.00
8114	Condenser - Two Gang for Models 50 & 50SW only	2.00
8812	Condenser - 16-12 Mfd. Electrolytic	1.00
3003	Condenser - 5 Mfd. 25 Volt Electrolytic	.40
2756	Condenser - .1 Mfd. 400 Volt	.20
3512	Condenser - .01 Mfd. 400 Volt	.20
3517	Condenser - .02 Mfd. 400 Volt	.16
2183	Condenser - .05 Mfd. 200 Volt	.18
2475	Condenser - .25 Mfd. 200 Volt	.18
3515	Condenser - .006 Mfd. 400 Volt	.24
2280	Condenser - .0005 Mfd.	.12
3410	Condenser - .00005 Mfd.	.11
3336	Resistor - 1 Megohm 1/4 Watt	.11
3359	Resistor - 2 Megohm 1/4 Watt	.11
2763	Resistor - 500M ohms, 1/4 Watt	.11
1824	Resistor - 250M ohms, 1/2 Watt	.12
1843	Resistor - 50M ohms, 1/4 Watt	.11
3349	Resistor - 10M ohms, 1/4 Watt	.11
3356	Resistor - 35M ohms, 1/4 Watt	.11
1890	Resistor - 500 ohms, 1/2 Watt	.12
3361	Resistor - 42 ohms, Candohm	.20

REPLACEMENT PARTS LIST — MODELS 57A-60-Short Wave Models

Part No.	Description	Price
8107	Two Gang Condensers Cut Plate 456	2.00
4150	Antenna Coil for Models 57-A & 60 only	1.18
4151	Oscillator Coil for Models 57-A & 60 only	1.18
4152	Antenna Coil for SW Models only	1.18
4153	Oscillator Coil for SW Models only	1.18
3361	Candohm - 40 Ohm	.20
8213	Three Section Trimmer	.75
3681	Antenna Coil Complete	3.50
3682	Mixer Coil Complete	3.50
8210	Adjustable Condenser	.40
2366	Condenser .0001 Mica	.12
2280	" .0005 "	.12
8815	" Dual Electrolytic 16-8 Mfd. 200 Volt	1.00
8816	" 8 Mfd. Electrolytic 200 Volt	.50
3513	" .02 Tubular 200 Volt	.20
2183	" .05 " 200 Volt	.20
2519	" .1 Tubular 200 Volt	.20
2756	" .1 Tubular 400 Volt	.20
3512	" .01 Tubular 400 Volt	.20
3512	" .006 Tubular 400 Volt	.20
2475	" .25 Tubular 200 Volt	.20
1843	Resistors 50,000 ohm 1/5 Watt	.12
3349	" 10,000 " 1/5 "	.12
2761	" 300 " 1/5 "	.12
2763	" 500,000 " 1/5 "	.12
3352	" 1 meg " 1/5 "	.12
1844-A	" 100,000 " 1/5 "	.12
1747	" 50,000 " 1/5 "	.12

PARTS FOR E57 LONG WAVE MODEL ONLY

8106	Variable Condenser	2.00
3644	Long Wave Oscillator Coil Complete	1.00
3645	Long Wave R.F. Coil Complete	1.00
3646	Broadcast Oscillator Coil Complete	1.00
3647	Broadcast R.F. Coil Complete	1.00
4038	Dial Complete	.88
5807	Band Switch	.38
8215	Trimmer Condenser 50-150 MMFD	.20
8216	Trimmer Condenser 250-550 MMFD	.20
8127	Trimmer 0-30 MMFD.	.18

NOTES ON E-57 LONG WAVE

1. The service notes given on previous page on standard 57 models apply to the E-57 long wave model generally.

2. The proceedure in aligning the set is the same except that the regular Broadcast band 540 to 1500 KC must be aligned before the long wave band.

   The Broadcast band oscillator padding condenser on this model is located near the center of the chassis and mounted through the back side of chassis.

3. To align the 150 to 350 KC band, set dial hand to 300 KC and peak oscillator trimmer (this trimmer is the one behind the variable condenser and under the 6-A-7 tube) to 300 KC.

   Peak the R.F. trimmer (the one near the top of the chassis directly over the variable condenser) to 300 KC after the oscillator trimmer has been set.

4. Rotate dial to 150 KC and peak oscillator padding condenser to 150 KC this is the condenser mounted through the front of the chassis below the dial.

©John F. Rider, Publisher

MODEL E-57
Schematics
Voltage

HOWARD RADIO CO.

MODEL 57-A
MODEL 57-AUS

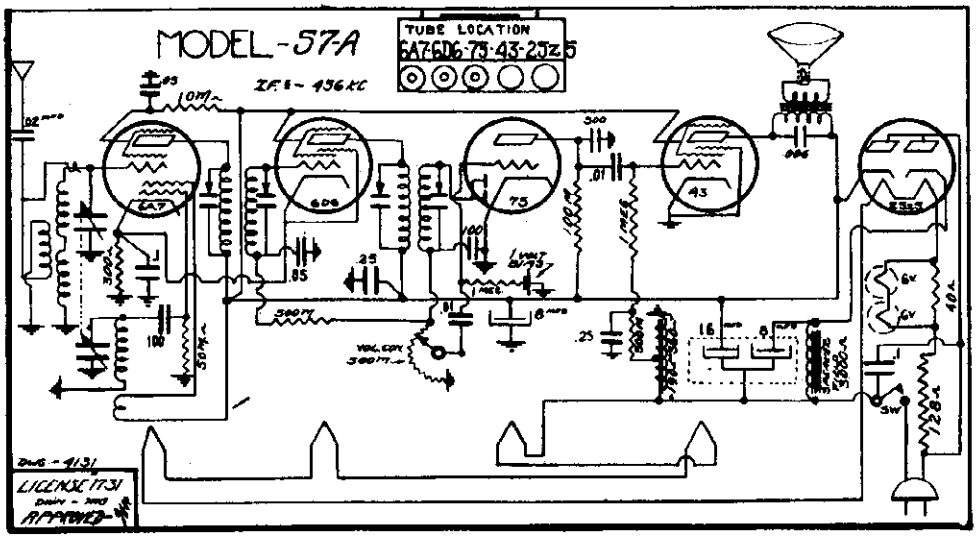

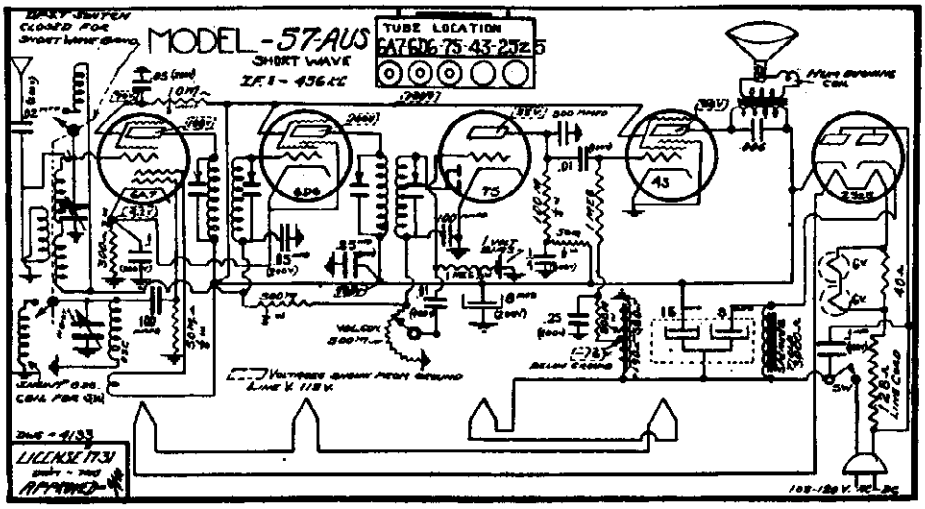

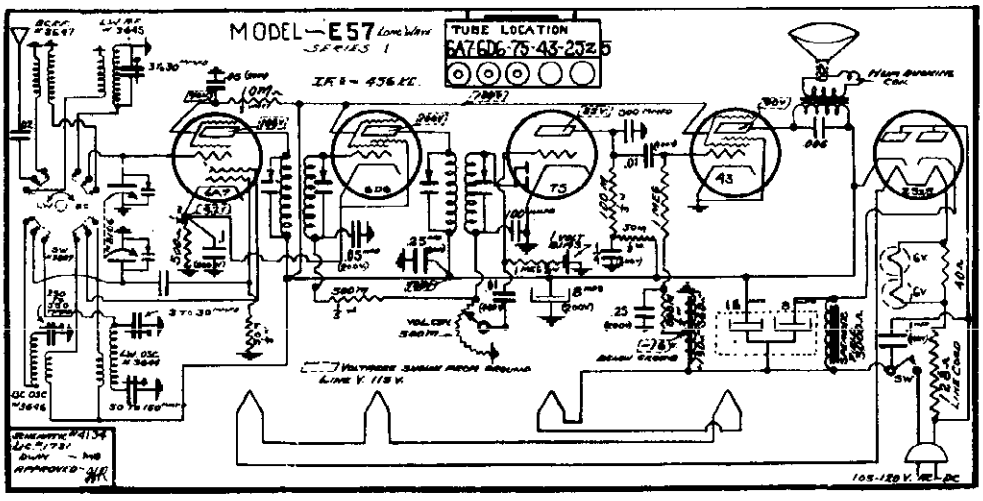

©John F. Rider, Publisher

MODEL 60
MODEL 60-SW
Schematics, Voltage
Socket, Notes
MODEL 57-A
Notes

HOWARD RADIO CO.

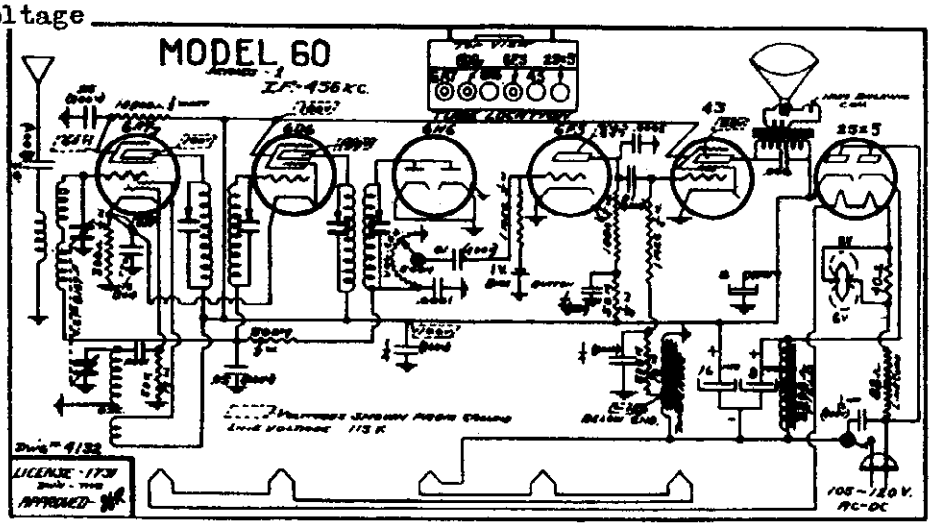

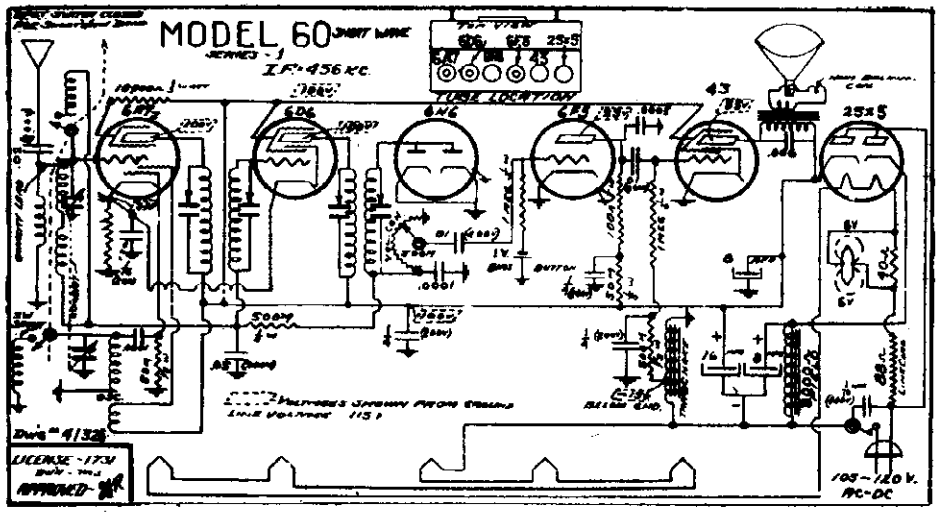

FOR PARTS LIST SEE INDEX

SERVICE NOTES ON MODELS 57-A, 60 AND SHORT WAVE MODELS

1. See the schematics for the various voltages at the sockets.

2. Should the chassis be serviced at any time it is important to check the position of the pilot light socket brackets and be sure they do not touch the speaker cone on the edges or at any point. They should be in such a position so as to not be forced against the cone by the cabinet panel when installed back in cabinet.

3. The pilot light leads running from the sockets to the resistor should be kept high and away from all nearby wires to avoid pick-up hum.

4. The Short Wave Models attain the range by use of shunt coils across the R.F. and oscillator secondaries.

5. The Intermediate Frequency transformers should be aligned to 456 KC.

6. When the variable condenser is a full capacity (all the way to the right) the dial hand should be set on the horizontal dividing line.

7. The back section of the two gang condenser is the oscillator section and the trimmer should be peaked at 1400 KC and then peak the R.F. trimmer (Front section) to 1400.

©John F. Rider, Publisher

MODEL 58
Schematic
Voltage

HOWARD RADIO CO.

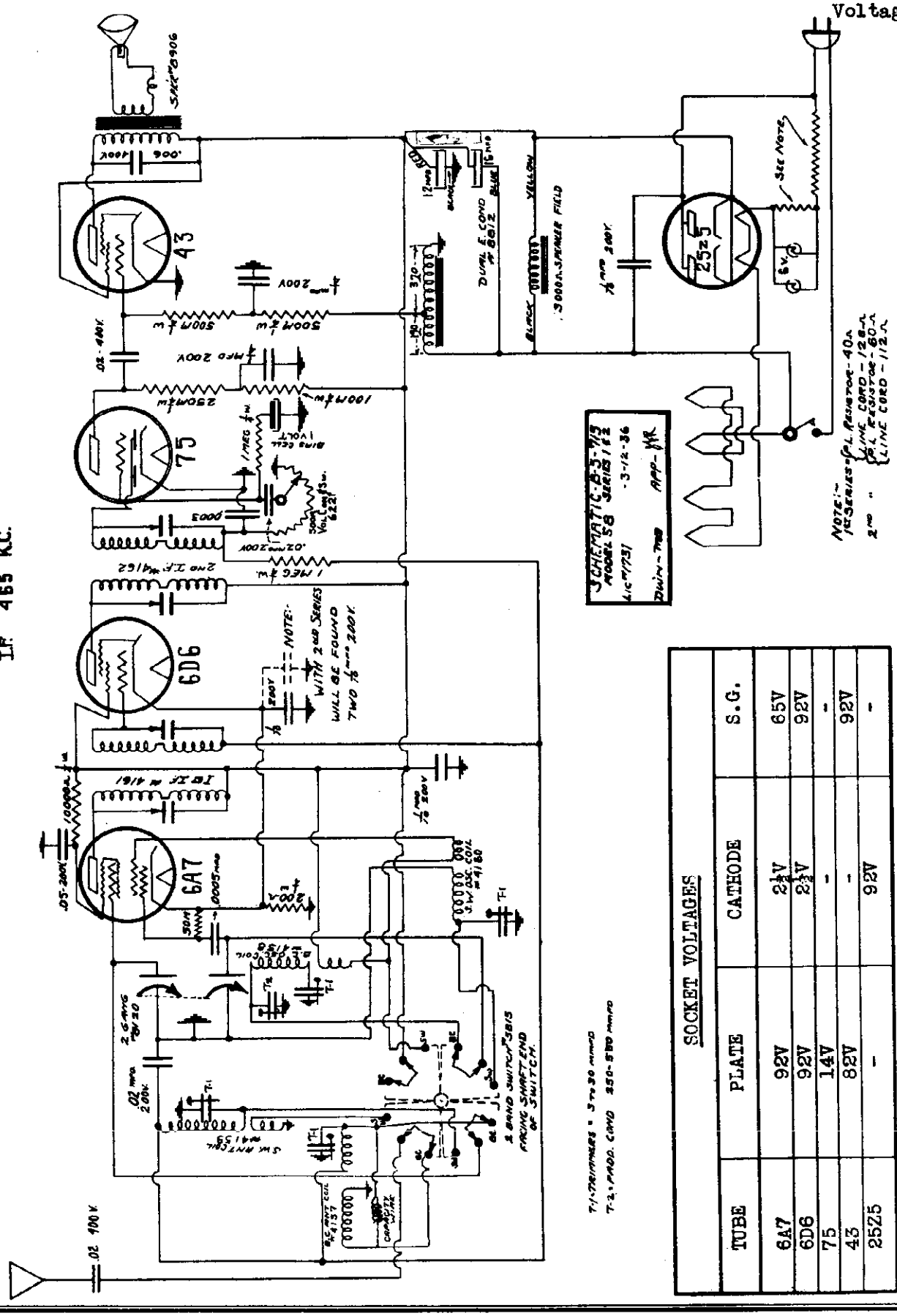

SOCKET VOLTAGES

TUBE	PLATE	CATHODE	S.G.
6A7	92V	2½V	65V
6D6	92V	2½V	92V
75	14V	-	-
43	82V	-	92V
2525	-	92V	-

Taken from ground with line voltage at 115 V.

©John F. Rider, Publisher

MODEL 58

Alignment

Socket, Trimmers

Parts List

HOWARD RADIO CO.

Part No.	PRICES SUBJECT TO CHANGE WITHOUT NOTICE Description	Price
7801	Bias Cell - 1 Volt	.80
4157	Coil - Antenna B.C.	.56
4158	Coil - Oscillator B.C.	.35
159	Coil - Antenna S.W.	.40
4160	Coil - Oscillator S.W.	.40
4161	Coil - 1st. I.F. Complete with can and grid cap	.90
4162	Coil - 2nd. I.F. Complete with can and grid cap	.90
4320	Choke - 560 ohm, tapped at 190 ohms	1.00
5525	Cord - line, 138 ohms	.64
5527	Cord - line, 112 ohms	.64
8120	Condenser - variable, 2 gang	2.25
8812	Condenser - 16-12 Mfd. Electrolytic - 200 volt	1.00
8216	Condenser - Padding 250-550 Mmfd.	.80
3127	Condenser - Trimmer 3-30 Mfd,	.16
2319	Condenser - .1 Mfd. 200 Volt	.16
3513	Condenser - .02 Mfd. 200 Volt	.16
3517	Condenser - .02 Mfd. 400 Volt	.20
2183	Condenser - .05 Mfd. 200 Volt	.16
2475	Condenser - .25 Mfd. 200 Volt	.16
3515	Condenser - .006 Mfd. 400 Volt	.24
8304	Condenser - .0003 Moulded Mica	.12
3410	Condenser - .00005 Moulded Mica	.12
8221	Control - Volume and switch - 500M ohms	.92
4063	Dial card - calibrated	.35

REPLACEMENT PARTS LIST

4014	Dial hand and screw	.10
4057	Drive disc - 1/4" hub (pyralin)	.20
4056	Dial glass	.15
7112	Knob - plain	.15
7113	Knob - coded (specify colors)	.17
1819-A	Lamp - dial - 6 volt (brown bead)	.12
3340	Resistor - 200 ohms - 1/4 Watt	.12
2785	Resistor - 10M ohms - 1/4 Watt	.12
1543	Resistor - 50M ohms - 1/4 Watt	.12
3327	Resistor - 100M ohms - 1/4 Watt	.12
3355	Resistor - 250M ohms - 1/4 Watt	.12
3328	Resistor - 500M ohms - 1/4 Watt	.12
3335	Resistor - 1 Megohm - 1/4 Watt	.12
3361	Resistor - 40 ohm candohm	.20
3362	Resistor - 60 ohm candohm	.20
2746	Socket - 6 prong	.14
2747	Socket - 7 prong	.14
4030	Socket - pilot light (slotted)	.14
8906	Speaker - 5" - 3,000 ohms	5.75
5815	Switch - 2 band	.80
6600	Tube shield - base	.04
6601	Tube shield - shell	.08
6602	Tube shield - top	.04
2463	Wire - 20 Ft. antenna roll	.80

THE ALIGNMENT PROCEDURE

The following alignment instructions are given with the assumption that the rvice station has a signal generator capable of accurately covering the range of e receiver.

The only other apparatus necessary is a meter connected in the output stage to dicate resonance. This can be a 0 to 3 volt AC meter connected across the voice il of the speaker or preferably an output meter connected in the plate circuit of e 43 power tube in series with an 8 MFD paper condenser.

The schematic circuit of the set will be found on the back side of the chassis.

THE I.F. STAGES

The I.F.'s are aligned by the usual system of feeding the intermediate frequen- of 465KC into the grid of the 6A7 tube.

The two trimmers in each of the I.F. cans should be very carefully peaked to nonance as they are very critical and will greatly affect the performance of the t. These are trimmers number C1, C2, C3, C4. (See pictorial diagram).

The sensitivity of the I.F. stages will be 25 microvolts for a 50 milliwatt out- ut.

Always use as low an output as possible from the signal generator in making the arious adjustments.

ALIGNMENT OF SHORTWAVE BAND 5.5 TO 18 M.C.

First check the position of the dial hand by rotating the tuning knob to the ft to full capacity. At this point the dial hand should be straight across in line th the lines dividing the scale in half. If the hand is off position it can easi- be lined up by removing the dial glass to get at the screw holding the dial hand.

1. Turn wave band switch all the way to the right for the Short Wave Band.
2. Tune dial hand to 17 megacycles.
3. NOTE: FOR ADJUSTMENT AT 17 MEGACYCLES THE OUTPUT FROM THE SIGNAL GENERATOR SH MUST BE COUPLED DIRECT TO THE ANTENNA LEAD OF THE SET. FOR TRUE ALIGNMENT STRENGTH T THE RADIO ANTENNA LEAD IS SUCH A MANNER THAT IT WILL PICK UP THE 50 CALLED "WILDF GNAL OF 17 MEGACYCLES SPLITTING FROM THE GENERATOR. IT IS ALSO IMPORTANT THAT THIS GNAL ONLY BE STRONG ENOUGH TO JUST BE HEARD.
4. When the above set-up is arranged peak oscillator condenser C5 to the 17 gacycle weak signal.
5. After adjusting the oscillator trimmer, peak the S.W. antenna condenser C6 17 megacycles.

NOTE: After adjusting the short wave band at 17 megacycles, the signal genera- r output to antenna should be increased and receiver dial advanced to .9 megacycle ser and note if test oscillator signal is heard.

In case there is no response the oscillator trimmers have been pulled down too ghtly. The trimmers should be released until this condition exists then go back original point of alignment - reduce antenna input voltage and correct the trimmer justment.

EXAMPLE: The receiver has been adjusted to 17 megacycles. Tune receiver to proximately 16.9 MC.

Increase oscillator signal by "opening up" the attenuator. Move the dial back d forth at 16.9 MC.

If no signal is heard, let oscillator trimmer off until it is heard at 16.9 MC.

Reduce signal voltage from generator, go back to 17 MC and slightly correct this st trimmer adjustment.

THE BROADCAST BAND

1. Turn wave band switch all the way to left and dial hand set to 1400 KC (the p scale). The signal generator may be coupled direct to the antenna lead on this nd, through a standard 200 MMFD Condenser.
2. Peak oscillator trimmer C7 to 1400 KC from the signal generator.
3. Peak antenna trimmer C8 to 1400 KC after adjusting oscillator.
4. Set dial hand to 550 KC and adjust oscillator padding condenser C9 to 550 KC.
5. Recheck dial at 1400 KC as in Section 1.
6. Points in the middle of the dial may be checked and if necessary the plates of the back section (oscillator) of the variable condenser may be bent for alignment.

4. NOTES

1. Seal all trimmers after their final adjustment.
2. Be sure that the settings are being made to the true fundamental signal from the oscillator and not on a harmonic or image frequency.
3. Refer to the chart included for the voltages at the tube sockets.

HOWARD RADIO CO.

MODEL 68
Schematic
Voltage

THE TUNING EYE

The movement of the tuning eye or resonance indicator is easily understood, as the station is tuned in, the green sections of the eye will draw together or tend to draw together depending upon the strength of the station. Rotate the tuning knob back and forth until the exact resonance point is found.

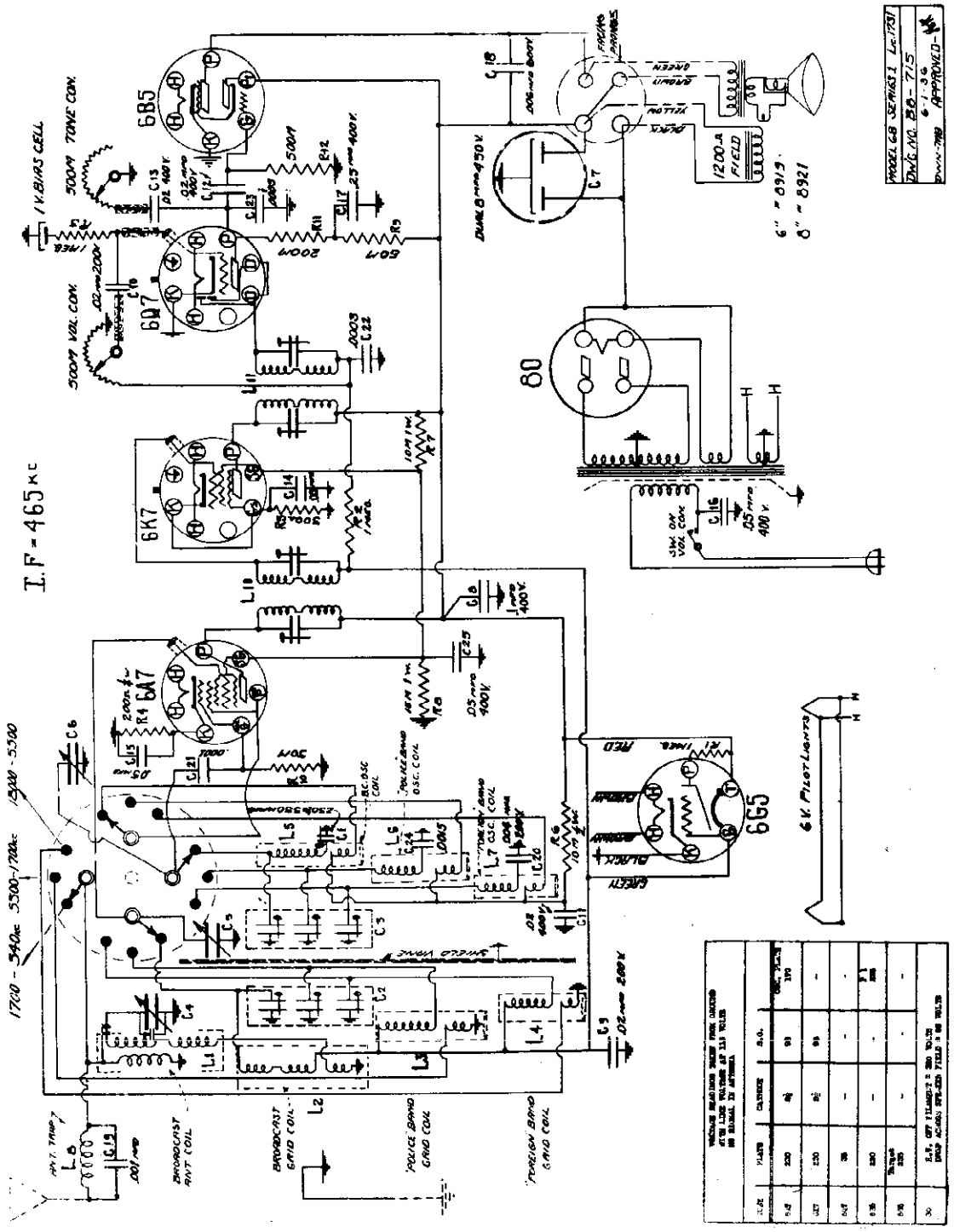

©John F. Rider, Publisher

INSTRUCTIONS No. 68

FOR

ALL WAVE SUPERHETERODYNE

TABLE AND CONSOLE MODELS

INSTALLATION

Preparing The Receiver:

The chassis is floated on cushion rubber within the cabinet. However, for shipping purposes this mounting is made rigid by means of wooden strips (A) inserted at the two sides of the chassis, between the chassis and the shelf of the cabinet.

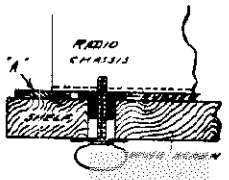

Before operating the receiver, it is necessary to remove these wooden strips. Loosen the four wing screws, one at each corner of the chassis.

USE ONLY WITH ALTERNATING CURRENT

Unless otherwise specified on back of chassis, this receiver is for use only with 105 to 120 Volts Alternating Current.

Antenna and Ground:

The ANTENNA should be about 75 feet in length, including lead-in, and as high as convenient. The BROWN lead extending from the right side of the chassis is the Antenna Lead.

The GROUND is the BLACK lead, and should have a good connection to a water pipe.

OPERATION

Important:

Read the following OPERATING INSTRUCTIONS very carefully and take time to thoroughly understand them. You will be well repaid by the finer performance that you can secure from the receiver, particularly on short waves.

The receiver has four operating controls (refer to diagram on next page). The knob of each control is clearly marked as to its function.

The knob with the three individual colors correspond to the three different colored band ranges covering all frequencies from 540 to 18,000 KC. (On the two short wave ranges the numerals are abbreviated to megacycles). Try the set first on the regular Broadcast band, with the white marker on the knob in the straight up position.

First turn the set on by rotating the combination OFF-ON switch and VOLUME control knob slightly to the right. Further rotation regulates the volume after the station has been tuned in with the TUNING knob.

NEVER REGULATE THE VOLUME BY DETUNING THE STATION, USE THE VOLUME CONTROL.

THE TONE CONTROL when turned to the left softens the tone. This can be set to any position that suits the individual.

TUNING ON THE POLICE AND AMATEUR BAND
(1.7 to 5.6 Megacycles)

Set the band switch to the middle position which is for the blue colored scale.

Rotate the tuning knob slowly until a station is tuned in. This scale is calibrated in megacycles. (One megacycle equals 1000 kc.) If the frequency of a desired station is known, it can be tuned in at the corresponding frequency marking on the dial. In addition to this frequency calibration, there are lettered blocks on this scale. The Station Selector knob must be turned more slowly and carefully for stations on this band than is necessary for the conventional Broadcast Stations.

TUNING ON THE U.S.A. AND FOREIGN SHORT WAVE BAND
(5.5 to 18 Megacycles)

Set the band switch all the way to the right bringing the yellow colored marker in position for the yellow scale.

Rotate the tuning knob very slowly until the desired station is heard. This scale is calibrated in megacycles. Many code stations of all kinds also will be heard. The tuning knob must be turned more slowly and carefully for reception on this band than for reception on the other two bands. The use of a Short Wave 'Log' will be of great assistance in picking up Short Wave Stations. Such 'logs' list the location, frequency and operating schedule of Short Wave stations.

NOTES ON SHORT WAVE RECEPTION

Short wave reception with ANY short wave receiver differs markedly, in many respects, from the usual broadcast reception. Fading is very much more pronounced. Quite often it is very rapid, making the voice or music seem to flutter. Electrical disturbances are more bothersome. Even the ignition systems of passing automobiles may cause interference on the very short waves.

The difference in time between the United States and foreign countries must constantly be borne in mind when trying for foreign broadcast reception. For instance, when it is 11 P.M. in New York City, it is 4 A.M. of the NEXT day in London and Paris, but early afternoon of the SAME day in Japan and Australia. This difference in time must be remembered constantly for two reasons. First, in order to determine whether or not it is a likely time of day for the foreign station to be broadcasting. Second, because the TIME OF DAY largely determines the portion of the dial that will prove most productive of results for foreign broadcast reception.

Usually, the part of the dial toward the highest frequency end is useful mainly when the path between the broadcast station and the receiver is totally in daylight. Therefore, attempts to obtain good reception on these frequencies at night usually are unsuccessful. The portion of the dial toward the low frequency end will be best when the path between the broadcast station and the receiver is in total darkness. The middle portion of the dial will bring in stations whose path lies partly in daylight and partly in darkness. Keeping the difference in time in mind, the path between a broadcaster in some particular part of the world and your own receiver can be visualized and the proper part of the dial used.

To illustrate, at 6 o'clock in the afternoon in Buffalo, N.Y., the London (Daventry) England, station GSD - 11.75 megacycles - comes in very well. Since it is 9 P.M. in London when it is 4 P.M. in Buffalo, the path of the radio waves lies partly in daylight and partly in darkness and the 11.75 megacycle frequency is very effective. As darkness approaches in Buffalo, GSD fades out, but GSA, the 6.05 megacycle transmitter of the same station will come in strongly since the transmission path them lies in darkness. Very often, the station makes the announcement that it is signing off of the higher frequency and resuming transmission at the lower one.

Allowance must be made for the season of the year since the days are longer in Summer.

Reception on the short waves is much less regular and less consistent than it is on the usual broadcast band. Stations at extreme distances may be picked up while equally powerful nearer ones cannot be heard. Conditions vary from day to day. It may be that for a period of several days foreign broadcasts are heard excellently, only to be followed by a like period during which distant reception becomes practically impossible. Many of the radio magazines report monthly on the sort of reception to be expected on the various frequencies.

IMPORTANT: Tuning for short wave stations must be done very much more SLOWLY and CAREFULLY than is necessary for the regular broadcast stations. The higher the frequency (shorter the wave length) the more this is true. An almost imperceptible movement of the knob may mean the difference between hearing a foreign station and not hearing it. The Station Selector knob MUST be turned VERY slowly, or the station will be completely missed. But, the thrill that one can experience in making direct contact with foreign countries or the eavesdropping on ship and amateur telephony, fully compensates for the extra care needed to tune these in.

SERVICE SUGGESTIONS

1. Be sure that the antenna and ground connections are made according to instructions.

2. Be sure that all of the tubes are in good operating condition, that they are firmly seated in their proper sockets, that the clips are attached to the small caps on the tops of those tubes requiring them and that the speaker plug is pushed all the way into its socket at the rear of the receiver.

3. Be sure that the Wave Band switch is at the proper position for the frequency band desired.

4. See that the power cord plug is making proper contact in its receptacle.

REPLACEMENT PARTS AND PRICE LIST
PRICES SUBJECT TO CHANGE WITHOUT NOTICE

Part No.	Schematic Location	Description	List Price
7801		Bias Cell - 1 Volt	$ .20
8550	L8	Antenna Trap Assembly	.20
8545	L5	Coil - S. C. Oscillator	.20
8544	L3	Coil - S. C. Grid	.20
8547	L6	Coil - Police Band, Oscillator	.20
8546	L5	Coil - Police Band, Grid	.20
8549	L7	Coil - Foreign Band, Oscillator	.20
8548	L4	Coil - Foreign Band, Grid	.20
8543	L1	Coil - Broadcast, Antenna	.20
4191	L10	Coil - 1st I.F. Assembly	.24
4192	L11	Coil - 2nd I.F. Assembly	.24
8216	C1	Condenser - Padding	.40
8226	C3, C5	Condenser - Trimmer, 2 Section	1.20
8117-S	C4, C5, C6	Condenser - Variable, 3 Gang	3.60
8235	C7	Condenser - Dual 8 Mfd. 450 Volt Electrolytic	1.08
8734	C8	Condenser - .1 Mfd. 400 Volt	.80
3618	C9, C10	Condenser - .02 Mfd. 600 Volt	.16
3617	C11, C12, C13	Condenser - .05 Mfd. 400 Volt	.20
2185	C14, C15	Condenser - .05 Mfd. 600 Volt	.16
8707	C16, C26	Condenser - .05 Mfd. 400 Volt	.20
8758	C17	Condenser - .25 Mfd. 400 Volt	.32
8216	C18	Condenser - .004 Mfd. 400 Volt	.20
8218	C20	Condenser - .004 Mfd. 600 Volt	.20
1601	C19	Condenser - .001 Mfd. Mica	.20
2566	C21	Condenser - .0001 Mfd. Mica	.16
8204	C22	Condenser - .0008 Mfd. Mica	.16
8220	C23	Condenser - .0005 Mfd. Mica	.16
2006	C24	Condenser - .0015 Mfd. Mica - Minus 5% Plus .000	.20
8228		Control - Volume and Switch	1.20
8223		Control - Tone	.80
1562		Cord - A.C. Line and Plug	.52
4059		Dial Card - Calibrated	.64
4060		Dial Hand	.12
4049		Dial Glass	.55
5715		Escutcheon	.80
8642		Tuning Tube Fixture	.36
8222		Tuning Tube Cable and Socket	.75
3188		Drive Disc - 3-3/8 O.D.	.25
4075		Drive Disc and Hub - 3" O.D.	.45
480		Grid Cap	.05
7114		Knob - 3 Color band, coded	.25
7115		Knob - "Station Selector" coded	.25
7116		Knob - "Volume" -"Off", coded	.25
7117		Knob - "Tone", coded	.25
1918		Lamp - Dial - 6 Volt	.12
8235	R1, R8, R5	Resistor - 1 Megohm 1/4 Watt	.11
1628	R4	Resistor - 200 Ohm 1/4 Watt	.11
1630	R5	Resistor - 300 Ohm 1/4 Watt	.11
8549	R6	Resistor - 10M Ohm 1/2 Watt	.12
8777	R7	Resistor - 1CM Ohm 1 Watt	.16
8242	R8	Resistor - 15M Ohm 1 Watt	.16
1648	R9, R10	Resistor - 50M Ohm 1/2 Watt	.12
8235	R11	Resistor - 200M Ohm 1/4 Watt	.11
8235	R12	Resistor - 500M Ohm 1/4 Watt	.11
8245		Socket - Pilot Light	.15
8744		Socket - 4 Prong	.12
8748		Socket - 6 Prong	.14
8747		Socket - 7 Prong	.14
8240		Socket - 8 Prong, Metal Tube	.16
8819		Speaker - 6 inch	5.40
8819		Switch - Wave Band, 3 Position	1.08
4804		Transformer - Power	3.60
8681		Tube Shield Assembly and Grommet Ring	.16
80		Tube - Glass	.65
635		Tube - Glass	2.25
607		Tube - Metal	2.00
647		Tube - Glass	1.35
625		Tube - Glass	1.60
627		Tube - Metal	1.50
8515-A		Wing Screw	.04
8841		8" Speaker	6.40

AUTOMATIC VOLUME CONTROL

When the control has been adjusted for the desired volume from any particular station, the Automatic Volume Control feature of the receiver will tend to maintain the volume at this same value for other stations. It does this by automatically changing the sensitivity of the receiver to compensate for changes in the strength of the signal received from different Broadcasting Stations. In some locations noise may be encountered as the receiver is tuned between stations. This noise is normal and is due to the automatic increase in the sensitivity of the receiver. When listening to weak and distant stations the tone may become distorted at times. This is normal and is due to fading of the station beyond the limits which can be compensated for by the Automatic Volume Control.

©John F. Rider, Publisher

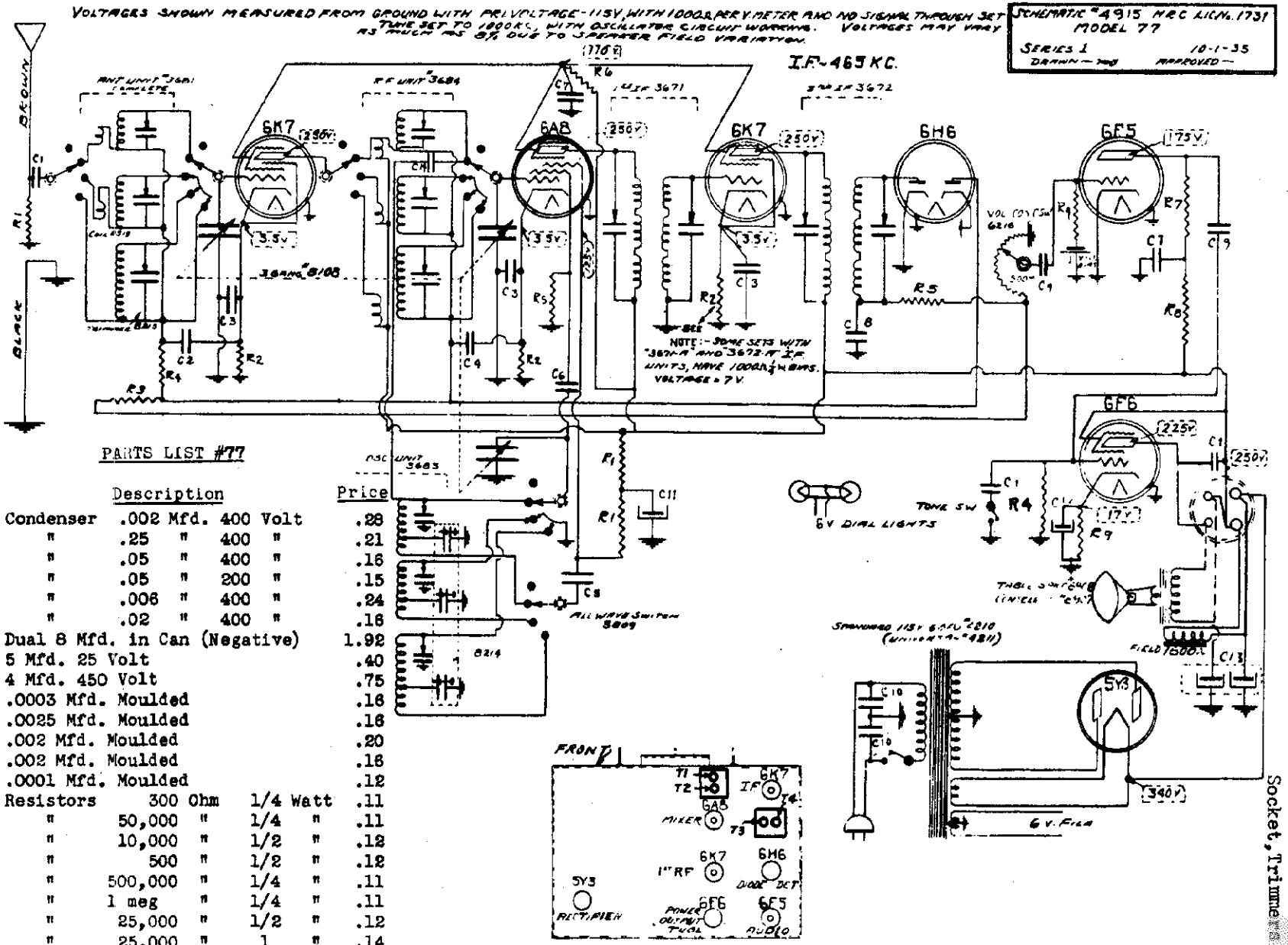

PARTS LIST #77

Part No.	Description	Price
3516 (C2)	Condenser .002 Mfd. 400 Volt	.28
2758 (C7)	" .25 " 400 "	.21
2757 (C10)	" .05 " 400 "	.16
2183 (C9)	" .05 " 200 "	.15
3515 (C1)	" .006 " 400 "	.24
3517 (C9)	" .02 " 400 "	.16
3004 (C13)	Dual 8 Mfd. in Can (Negative)	1.92
3003 (C12)	5 Mfd. 25 Volt	.40
8814 (C11)	4 Mfd. 450 Volt	.75
8304 (C8)	.0003 Mfd. Moulded	.16
8305X (C4)	.0025 Mfd. Moulded	.16
2287X (C5)	.002 Mfd. Moulded	.20
887	.002 Mfd. Moulded	.16
3366 (C6)	.0001 Mfd. Moulded	.12
1836 (R2)	Resistors 300 Ohm 1/4 Watt	.11
1843 (R5)	" 50,000 " 1/4 "	.11
3349 (R1)	" 10,000 " 1/2 "	.12
1890 (R9)	" 500 " 1/2 "	.12
3328 (R4)	" 500,000 " 1/4 "	.11
3335 (R3)	" 1 meg " 1/4 "	.11
3344 (R8)	" 25,000 " 1/2 "	.12
2650 (R6)	" 25,000 " 1 "	.14
1824 (R7)	" 250,000 " 1/2 "	.12

HOWARD RADIO CO.

MODELS 77-T, 77-
Schematic, Voltage
Socket, Trimmer

THE I.F. STAGES

The I.F.'s are aligned by the usual system of feeding the intermediate frequency of 465KC into the grid of the 6A7 tube.

The two trimmers in each of the I.F. cans should be very carefully peaked to resonance as they are very critical and will greatly affect the performance of the set. These are trimmers number T1, T2, T3, T4. (See pictorial diagram).

The sensitivity of the I.F. stages will be 30 microvolts or better.

Always use as low an output as possible from the test oscillator in making the various adjustments.

II ALIGNMENT OF SHORTWAVE BAND 5.5 TO 18 M.C.

First check the position of the dial hand by rotating the condenser shaft to the left to full capacity. At this point the dial hand should be straight across in line with the lines dividing the scale in half. If the hand is off position it can be lined up by removing dial glass and setting hand with screw in center of dial.

1. Set the test oscillator to 17 megacycles.

2. Turn wave band switch all the way to right for highest S.W. band, and set dial hand to 17 M.C.

3. Peak trimmer condenser T5 of the oscillator coil (See pictorial) to resonance with 17 M.C. fed into antenna.

4. Adjust antenna and RF coil trimmers T6 and T7 to same frequency after the above mentioned oscillator trimmer has been set.

5. Turn dial hand to 6 M.C. on the same band and peak padding condenser P-1 to 6 M.C.

III SHORTWAVE BAND 1.7 TO 5.5 M.C.

1. Set band switch to this band and dial hand to 5 M.C.
2. Peak trimmer T8 to 5 M.C.
3. Peak antenna and RF trimmer to T9 and T10 to 5 M.C.
4. Rotate dial to 1.7 M.C. and adjust padding condenser P-2 1.7 M.C.

NOTE: After adjusting the two high bands at 17 megacycles and 5 megacycles the test oscillator input to antenna should be increased and receiver dial advanced to .9 megacycle lower and note if test oscillator signal is heard.

In case there is no response the oscillator trimmers have been pulled down too tightly. The trimmers should be released until this condition exists then go back to original point of alignment - reduce antenna input voltage and correct the trimmer adjustment.

EXAMPLE: The receiver has been adjusted to 17 megacycles. Tune receiver to approximately 16.9 M.C.

Increase oscillator signal by "opening up" the attenuator. Move the dial back and forth at 16.9 M.C.

If no signal is heard, let oscillator trimmer off until it is heard at 16.9 M.C.

Reduce signal voltage from generator, go back to 17 M.C. and slightly correct this last trimmer adjustment.

The same applies to the 5 M.C. adjustment.

IV THE BROADCAST BAND

1. Turn wave band switch all the way to left and dial hand set to 1400 KC (the top scale).

2. Peak oscillator trimmer T11 to 1400 KC and RF circuit trimmers T12 and T13 to same frequency.

3. Set dial hand to 550 KC and adjust oscillator padding condenser P-3 to 550 KC.

4. Recheck dial at 1400 KC as in number (1) and (2).

5. Points in the middle of the dial may be checked and if necessary the plates of the front section of variable condenser may be bent for alignment.

V NOTES.

1. Seal all trimmers after their final adjustment.

2. Be sure that the settings are being made to the true fundamental signal from the oscillator and not on a harmonic or image frequency.

3. Refer to the schematic for the voltages at the tube sockets.

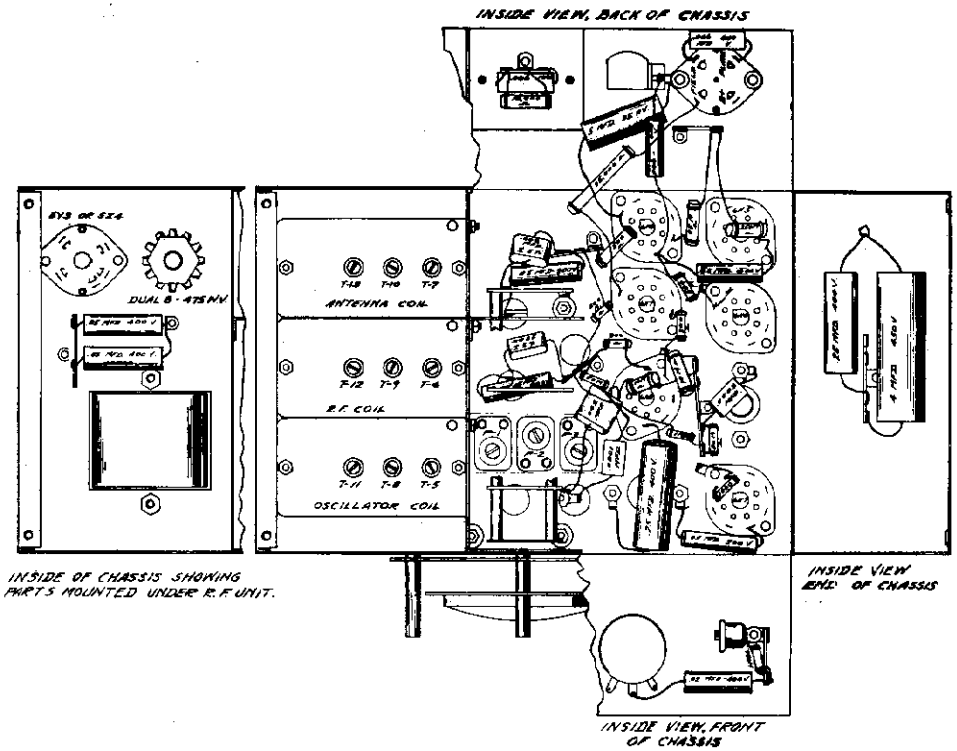

©John F. Rider, Publisher

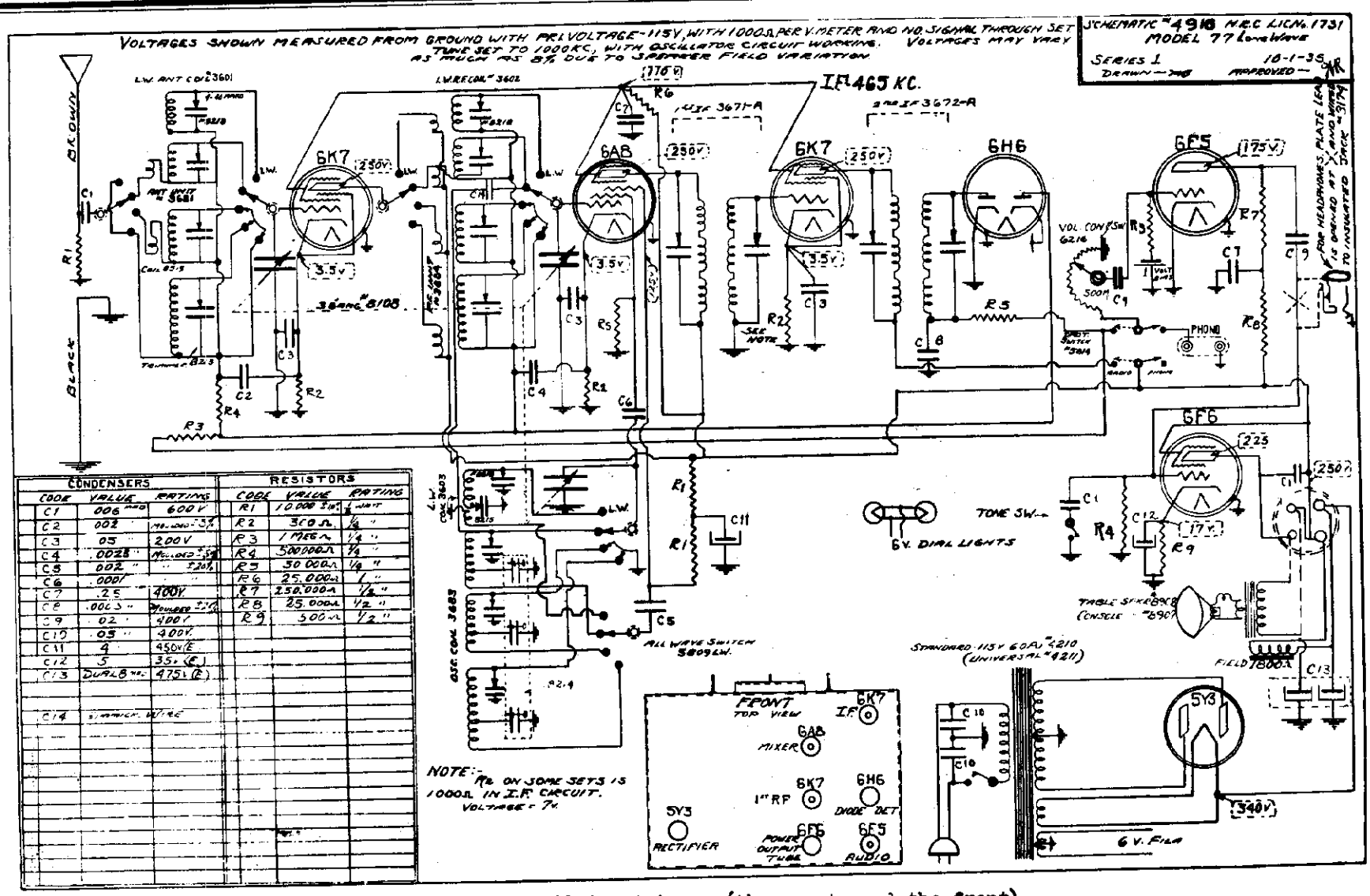

CONDENSERS			RESISTORS		
CODE	VALUE	RATING	CODE	VALUE	RATING
C1	.006 MFD	600 V	R1	10,000 Ω	1 WATT
C2	.002 "	10,000 ± 5%	R2	300 Ω	1/4 "
C3	.05 "	200 V	R3	1 MEG Ω	1/4 "
C4	.0025 "	MOLDED ± 5%	R4	500,000 Ω	1/4 "
C5	.002 "	± 20%	R5	50,000 Ω	1/4 "
C6	.0001 "	"	R6	25,000 Ω	1 "
C7	.25 "	400V	R7	250,000 Ω	1/2 "
C8	.0015 "	MOLDED ± 1%	R8	25,000 Ω	1/2 "
C9	.02 "	400 V	R9	500 Ω	1/2 "
C10	.05 "	400 V.			
C11	4 "	450 V. E			
C12	5 "	35 V. (E)			
C13	DUAL 8 MFD.	475 V. (E)			
C14	3 MMFD. MICA				

Adjust the oscillator trimmer (the one toward the front) to 300 KC and the antenna stage and R.F. stage trimmers to same frequency.

Adjust padding condenser to 150 KC with dial set to 150 KC.

MODEL 99 Long Wave
Schematic, Voltage
Notes, Alignment

HOWARD RADIO CO.

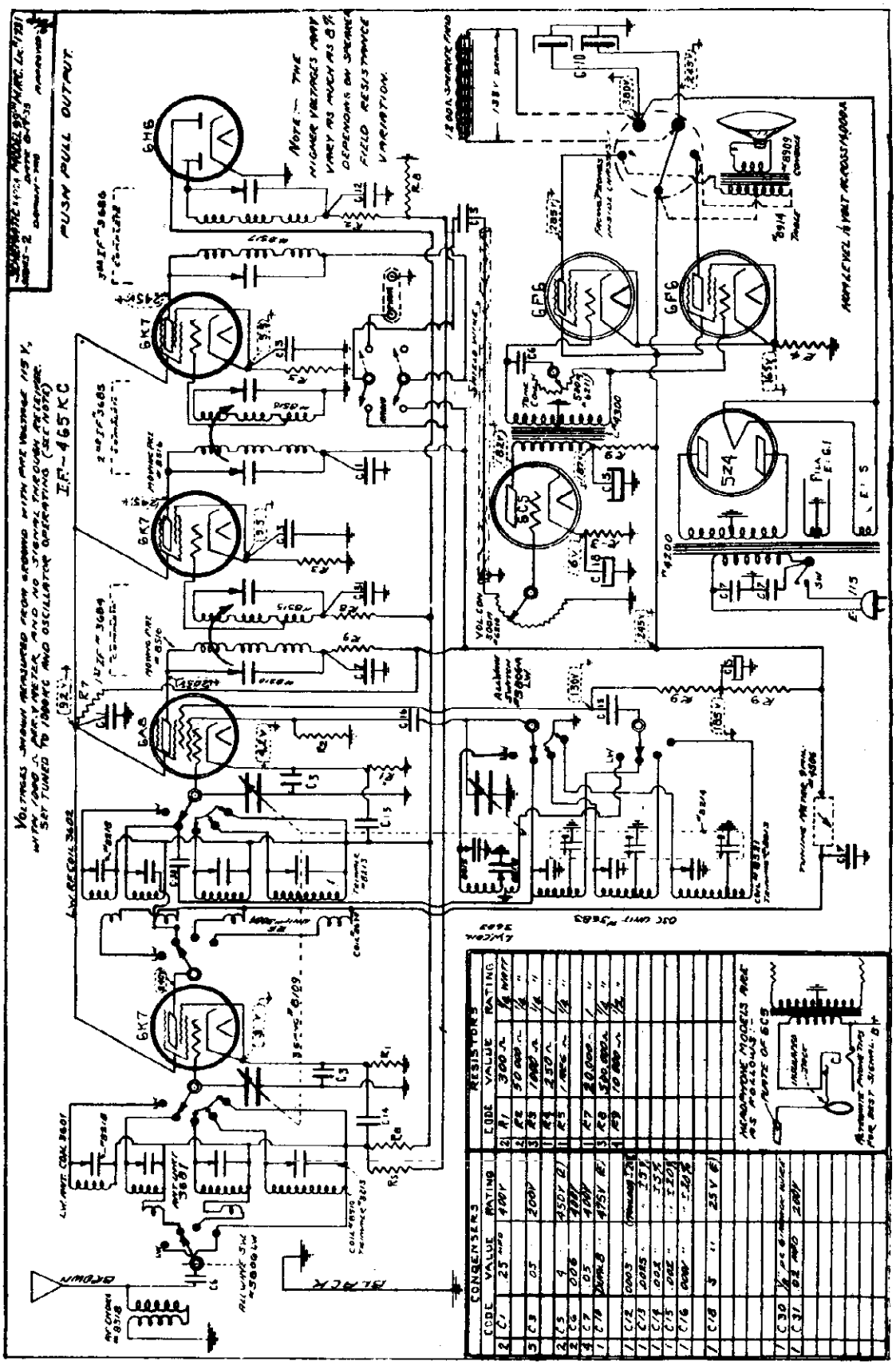

Adjust the oscillator trimmer (the one toward the front) to 300 KC and the antenna stage and R.F. stage trimmers to same frequency.

Adjust padding condenser to 150 KC with dial set to 150 KC.

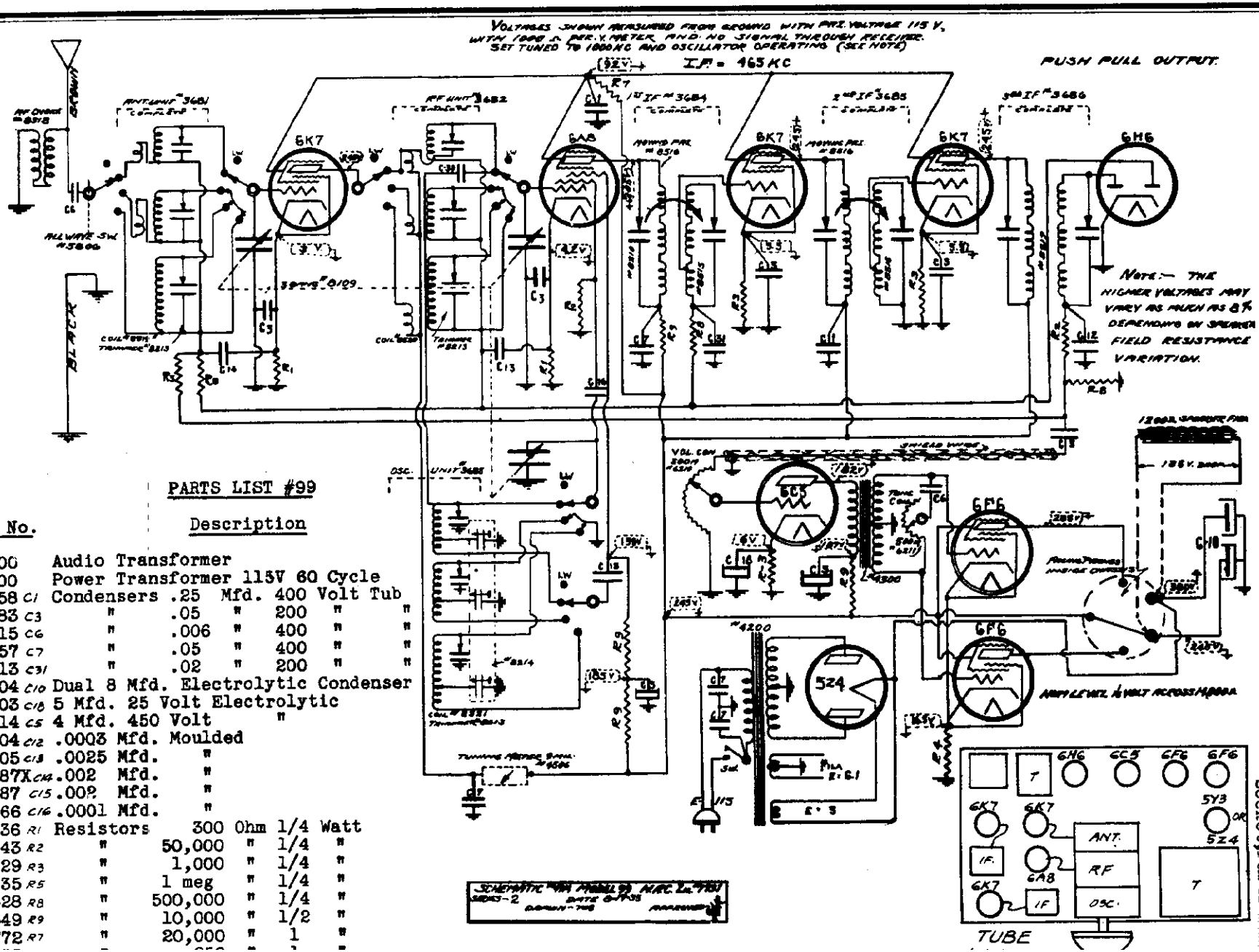

PARTS LIST #99

Part No.		Description
4300		Audio Transformer
4200		Power Transformer 115V 60 Cycle
2758	C1	Condensers .25 Mfd. 400 Volt Tub
2183	C3	" .05 " 200 " "
3515	C6	" .006 " 400 " "
2757	C7	" .05 " 400 " "
3513	C31	" .02 " 200 " "
3004	C10	Dual 8 Mfd. Electrolytic Condenser
3003	C18	5 Mfd. 25 Volt Electrolytic
8814	C5	4 Mfd. 450 Volt "
8304	C12	.0003 Mfd. Moulded
8305	C13	.0025 Mfd. "
2287X	C14	.002 Mfd. "
2287	C15	.002 Mfd. "
2366	C16	.0001 Mfd. "
1836	R1	Resistors 300 Ohm 1/4 Watt
1843	R2	" 50,000 " 1/4 "
3329	R3	" 1,000 " 1/4 "
3335	R5	" 1 meg " 1/4 "
3328	R8	" 500,000 " 1/4 "
3349	R9	" 10,000 " 1/2 "
1772	R7	" 20,000 " 1 "

I THE I.F. STAGES

The I.F.'s are aligned by the usual system of feeding the intermediate frequency of 465KC into the grid of the 6A7 tube.

The two trimmers in each of the I.F. cans should be very carefully peaked to resonance as they are very critical and will greatly affect the performance of the set. These are the trimmers in the three I.F. cans. (See pictorial).

THE I.F. STAGES MUST BE ALIGNED WITH THE FIDELITY CONTROL IN THE SHARP POSITION, THAT IS WITH THE SHAFT TURNED ALL THE WAY TO THE LEFT.

The sensitivity of the I.F. system in the sharp position is about 200 microvolts. In the high fidelity position the sensitivity is about 20 microvolts.

Always use as low an output as possible from the signal generator when making the various adjustments.

II ALIGNMENT OF SHORTWAVE BAND 5.5 TO 18 M.C.

First check the position of the dial hand by rotating the condenser shaft to the left to full capacity. At this point the dial hand should be straight across in line with the lines dividing the scale in half. If the hand is off position it can be lined up by removing dial glass and setting hand with screw in center of dial.

1. Set the test oscillator to 17 megacycles.

2. Turn wave band switch all the way to right for highest S.W. band, and set dial hand to 17 M.C.

3. Peak trimmer condenser T-5 of the oscillator coil (See pictorial) to resonance with 17 M.C. fed into antenna.

4. Adjust antenna and R.F. coil trimmers T-6 and T-7 to same frequency after the above mentioned oscillator trimmer has been set.

5. Turn dial hand to 6 M.C. on same band and peaks padding condenser P-1 to 6 M.C.

III SHORTWAVE BAND 1.7 TO 5.5 M.C.

1. Set band switch to this band and dial hand to 5 M.C.

2. Peak trimmer T-8 to 5 M.C.

3. Peak antenna and R.F. trimmers T-9 and T-10 to 5 M.C.

4. Rotate dial to 1.7 M.C. and adjust Padding Condenser P-2 to 1.7 M.C.

NOTE: After adjusting the two high bands at 17 megacycles and 5 megacycles the test oscillator input to antenna should be increased and receiver dial advanced to .9 megacycle lower and note if test oscillator signal is heard.

In case there is no response the oscillator trimmers have been pulled down too tightly. The trimmers should be released until this condition exists then go back to original point of alignment - reduce antenna input voltage and correct the trimmer adjustment.

EXAMPLE: The receiver has been adjusted to 17 megacycles. Tune receiver to approximately 16.9 M.C.

Increase oscillator signal by "opening up" the attenuator. Move the dial back and forth at 16.9 M.C.

If no signal is heard, let oscillator trimmer off until it is heard at 16.9 M.C.

Reduce signal voltage from generator, go back to 17 M.C. and slightly correct this last trimmer adjustment.

The same thing applies to the 5 M.C. adjustment.

IV THE BROADCAST BAND

1. Turn wave band switch all the way to left and dial hand set to 1400KC (the top scale).

2. Peak oscillator trimmer T-11 to 1400 KC and R.F. circuit trimmers T-12 and T-13 to same frequency.

3. Set dial hand to 550 KC and adjust oscillator padding condenser C-8 to 550 KC.

4. Recheck dial at 1400 KC as in number (1) and (2).

5. Points in the middle of the dial may be checked and if necessary the plates of the front section of variable condenser may be bent for alignment.

V NOTES

1. Seal all trimmers after their final adjustment.

2. Be sure that the settings are being made to the true fundamental signal from the oscillator and not on a harmonic or image frequency.

3. Refer to the schematic for the voltages at the tube sockets.

4. It will be noted that the audio transformer is mounted so that it can be pivoted by loosening screw in slot. This is made adjustable to be able to set transformer at point of minimum hum.

5. The alignment instructions are given with the assumption that the service station has an oscillator capable of accurately covering the range of the receiver.

The only other apparatus necessary is a meter connected in the output stage to indicate resonance. This can be 0 to 5 volt AC meter connected across the voice coil of the speaker or preferably an output meter connected in the plate circuit of the 42 power tube in series with an 8 MFD paper condenser.

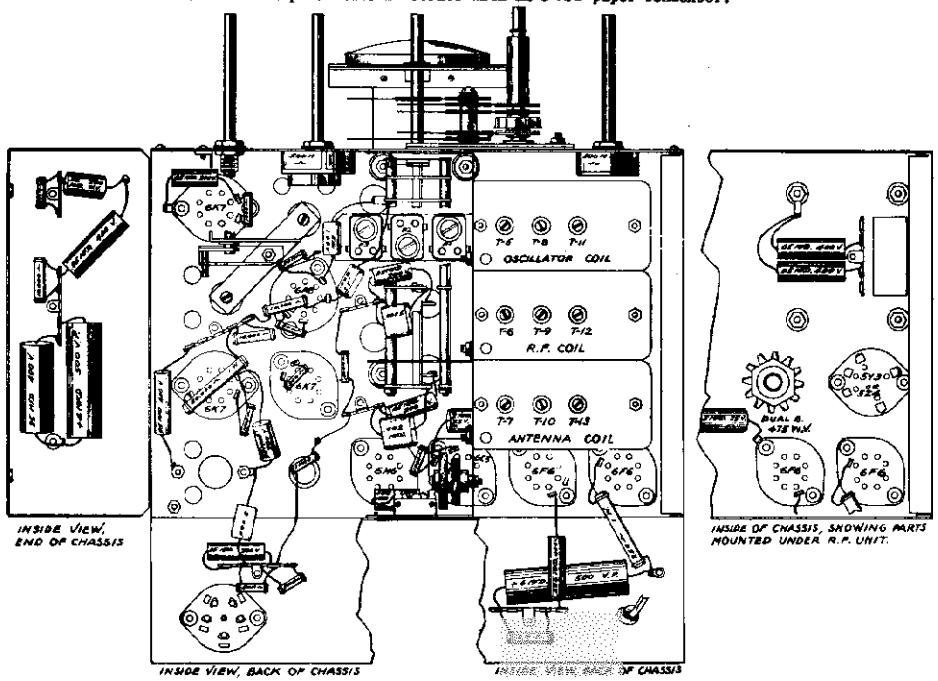

©John F. Rider, Publisher

INTERNATIONAL RADIO CORP.

MODELS 40,41,43, 44,Jewel
Schematic,Parts
MODELS 66X,86,96
Socket,Voltage
Alignment

This chassis is designed to operate from 115 volt power lines, either alternating or direct current. It is a two band receiver covering the American broadcast and police and airport bands.

The following tubes are employed:

6D6 - 1st Detector-Oscillator	43 - Pentode Output
6D6 - I. F. Amplifier	25Z5 - Rectifier
6C6 - 2nd Detector	165R4 - Regulator

ALIGNMENT

ESSENTIAL DATA: The intermediate frequency employed is 448 Kc.

The standard type of output meter should be used to indicate signal strength. It should be connected from the plate of the 43 tube to ground.

Poor sensitivity may be an indication of incorrectly adjusted I. F. trimmers.

Aligning of Broadcast band should be done on 1400, 1000 and 600 kilocycles.

INTERMEDIATES: To align the I. F. circuits, set the signal generator to 448 Kc. and feed its modulated signal direct to the antenna. Adjust the first I. F. transformer trimmers for maximum meter reading. Go over both adjustments at least three or four times for accuracy. Repeat this process on the second I. F. transformer. If adjustments are not made accurately, selectivity will be poor and I. F. oscillation may result. Finally, adjust the trimmer in the tuned wave trap for minimum meter reading.

BROADCAST BAND: Place the band change switch on the Broadcast position. Turn the dial to 1400 Kc. and feed a very weak 1400 Kc. modulated signal from your signal generator to the antenna. Adjust the broadcast oscillator trimmer and detector trimmer (on condenser gang) for maximum reading.

There is no adjustable padder condenser in this model so resonance on lower frequencies is accomplished by bending plates on tuning condensers.

SHORT WAVE BAND: No alignment necessary.

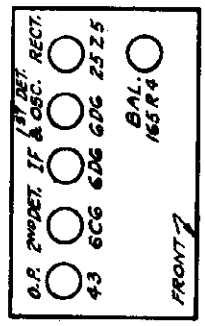

AVERAGE SOCKET VOLTAGES

Tube	Position	E_f	E_{bb}	E_{SG}	E_p
6D6	Det.-Osc.	14	9	100	100
6D6	I.F.	1	1	100	100
6C6	2nd Det.	8.5	-	14	38
43	Output	0	-	100	87
25Z5	Rect.	100	-	-	86

LINE 116 VOLTS. VOLUME CONTROL FULL ON. 10% VARIATION ALLOWABLE.
Measurements made from tube prongs to circuit ground.

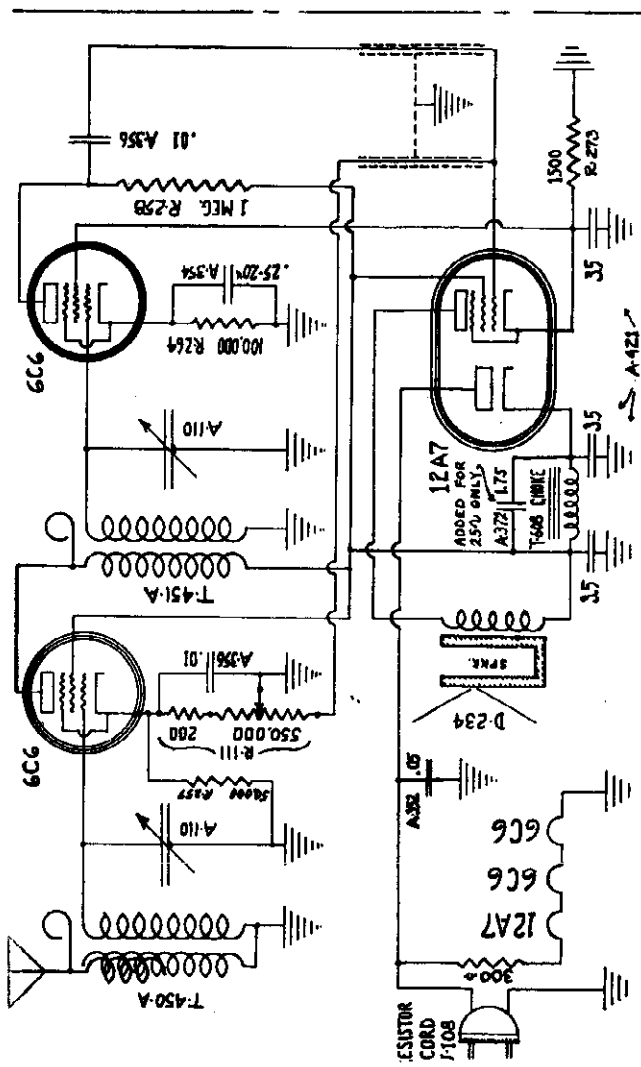

Part No.	Description	May, 1936 List Price
	PRICES SUBJECT TO CHANGE WITHOUT NOTICE	
A-110	2 Gang tuning condenser	$1.65
A-352	.05 mfd. tubular condenser	.15
A-354	.25 mfd. tubular condenser	.15
A-356	.01 mfd. tubular condenser	.15
A-372	1.75 mfd. (with brackets to solder to top of speaker frame) for 25 cycle operation only	.60
A-421	Filter condenser	1.00
D-234	5-inch Magnetic speaker	2.25
E-111	Knobs (order by color as well as number)	.15
H-41	6C6 Socket	.10
H-42	12A7 Socket	.10
R-111	Volume control with switch	.75
R-257	50M ohm resistor	.20
R-258	.1 meg. resistor	.20
R-264	100M ohm resistor	.20
R-273	1500 ohm resistor	.20
S-102	Goat tube shield	.15
T-450A	Antenna coil assembly	.60
T-451A	HF coil assembly	.75
T-608	Filter choke	.65
U-108	Power cord with plug	.55
WL-20	Antenna wire	.10
*	Model 40 cabinet complete (no back)	2.50
*	Model 41 cabinet complete (no back)	2.75
*	Models 42 to 48 incl. cabinet complete (no back)	4.00
*	Grille only with silk for Model 40 cabinet	.50
*	Grille only with silk for Models 41 to 48 cabinets (incl.)	.50

©John F. Rider, Publisher

MODELS 66X,86,96
Schematic,Parts

INTERNATIONAL RADIO CORP.

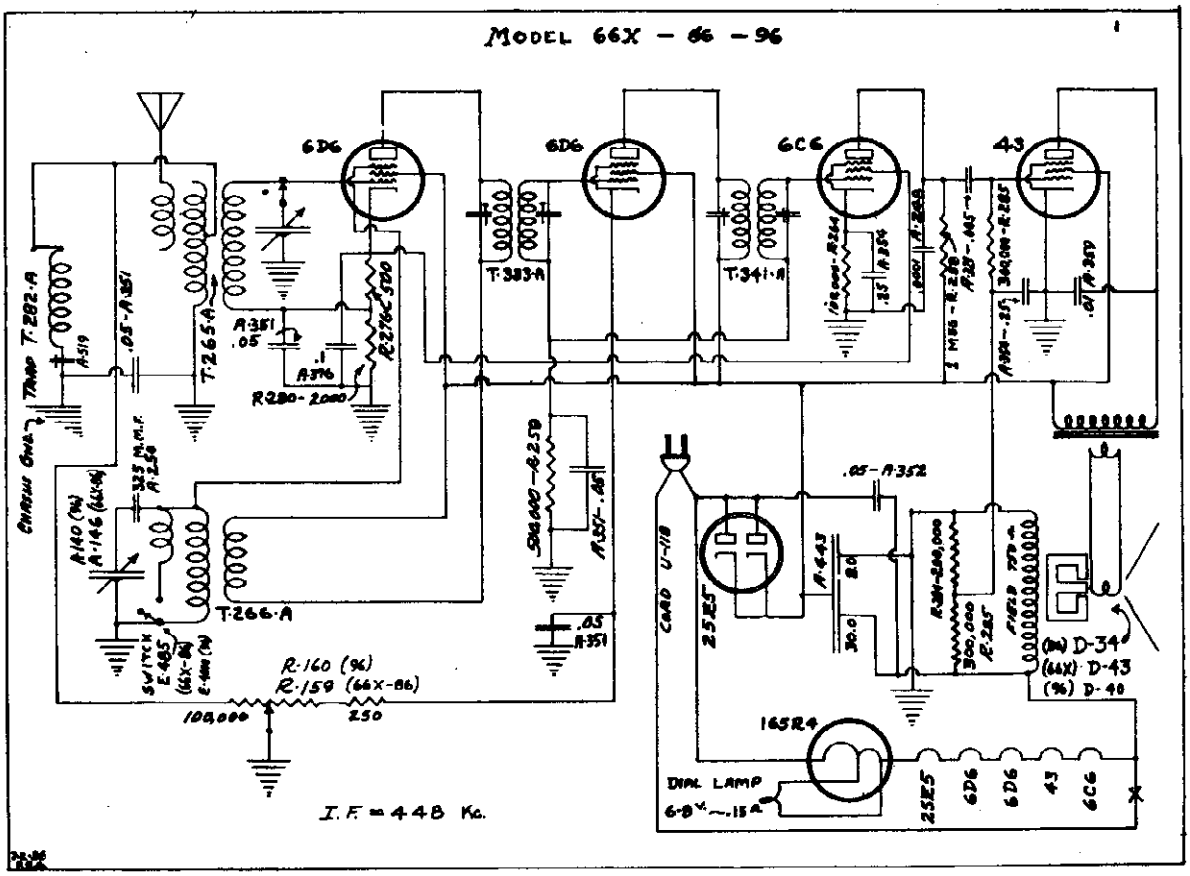

August 1936

PARTS PRICE LIST

MODELS 66X, 86, 96

Part No.	Description	List Price
A-140	2 gang tuning condenser (Model 96)	$1.90
A-146	2 gang tuning condenser (Models 66X & 86)	1.85
A-248	100 mmf. type O condenser	.20
A-250	325 mmf. mica padder condenser	.20
A-329	.005 mfd. 600 v. paper condenser	.15
A-351	.05 mfd. 200 v. tubular condenser	.15
A-352	.05 mfd. 300 v. tubular condenser	.15
A-354	.25 mfd. 25 v. tubular condenser	.20
A-359	.01 mfd. 400 v. tubular condenser	.15
A-376	.1 mfd. 25 v. tubular condenser	.15
A-443	Electrolytic filter condenser	1.15
D-34	Dynamic speaker (Model 86)	3.25
D-40	Dynamic speaker (Model 96)	3.25
D-43	Dynamic speaker (Model 66X)	3.00
E-111P	Knob (Model 66X)	.10
E-161	Large knob (Model 86 & 96)	.10
E-162	Small knob (Model 86 & 96)	.10
E-282	Dial pointer (Model 96)	.10
E-283	Dial pointer (Model 66X & 86)	.05
E-294	Transparent dial window (Model 96)	.25
E-298	Transparent dial window (Model 66X & 86)	.20
E-299	Dial scale (Model 66X)	.15
E-2002	Dial scale (Model 86)	.15
E-481	Special pilot lamp 6-8 v.,.15 amp.	.15
E-483	Pilot lamp socket & bracket (Model 66X & 86)	.10
E-485	Wave band switch (Model 66X & 86)	.35
E-492	Pilot lamp socket and bracket (Model 96)	.10

Part No.	Description	List Price
E-2004	Dial acale (Model 96)	$ .30
E-4000	Wave band switch (Model 96)	.35
G-112	Dial drive spring (Model 96)	.05
H-18	25Z5 tube socket	.10
H-19	6D6 tube socket	.10
H-21	43 tube socket	.10
H-41	6C6 tube socket	.10
H-58	165R4 tube socket	.10
R-159	Volume control & power switch (Model 66X & 86)	.70
R-160	Volume control & power switch (Model 96)	.75
R-258	1 megohm carbon resistor	.20
R-259	500 M ohm carbon resistor	.20
R-264	100 M ohm carbon resistor	.20
R-276	500 ohm carbon resistor	.20
R-280	2000 ohm carbon resistor	.20
R-284	200 M ohm carbon resistor	.20
R-285	300 M ohm carbon resistor	.20
T-265A	Detector coil	1.00
T-266A	Oscillator coil	1.00
T-282A	Tuned wave trap	.50
T-333A	1st I. F. transformer	1.25
T-341A	2nd I. F. transformer	1.25
U-118	Power cord and plug	.30
X-368	Cabinet (Model 66X)	5.30
X-366	Cabinet (Model 86)	6.30
X-371	Cabinet (Model 96)	7.00

- - - -

PRICES SUBJECT TO CHANGE WITHOUT NOTICE

©John F. Rider, Publisher

INTERNATIONAL RADIO CORP.

MODELS 77,777,778
779
Schematic, Voltage
Changes

PRODUCTION CHANGES

Referring to the circuit diagram, part R-281, 100 ohm resistor in S. W. oscillator coil circuit has been found unnecessary and will be omitted in future production.

In some chassis a 25,000 ohm resistor has been inserted between the 76 tube plate resistor (part R-264, 100,000 ohm) and the coupling condenser (part A-375, .03 mfd.). The 25,000 ohm resistor carries part number R-274.

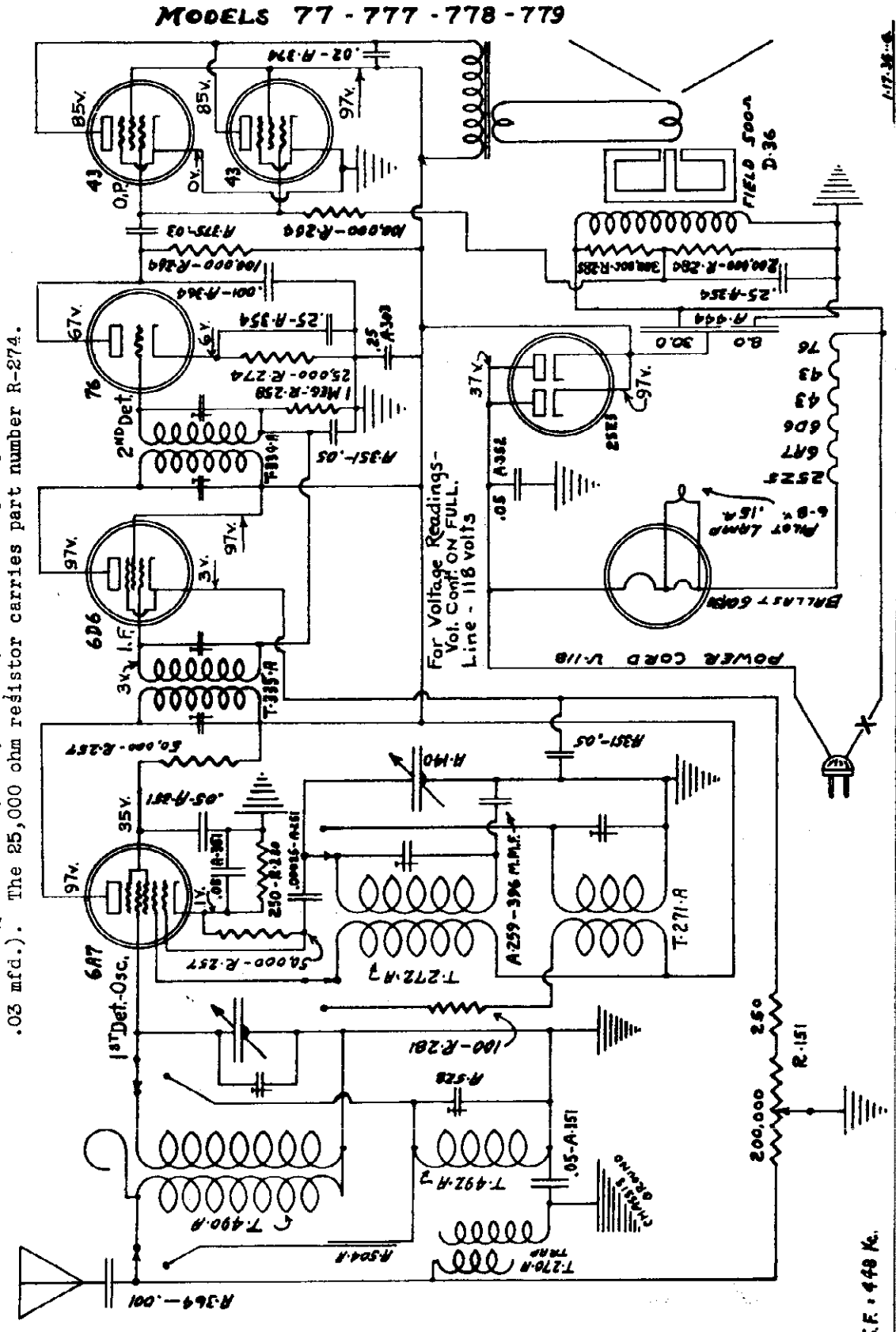

MODELS 77,777,778
779

Alignment,Parts

INTERNATIONAL RADIO CORP.

MODEL 77 SERIES

February, 1936

ALIGNMENT

ESSENTIAL DATA: The intermediate frequency employed is 448 Kc.

The standard type of output meter should be used to indicate signal strength. It should be connected from the plates of the 43 tubes to ground.

Poor sensitivity may be an indication of incorrectly adjusted I. F. trimmers.

Aligning of Broadcast band should be done on 1400, 1000 and 600 kilocycles.

The three trimmers on the bottom of the chassis are, reading from the end of the chassis toward the center, B. C. oscillator, S. W. detector and S. W. oscillator. No trimmer is used across the B. C. detector coil.

BROADCAST BAND: Place the band change switch on the Broadcast position. Turn the dial to 1400 Kc. and feed a very weak 1400 Kc. modulated signal from your signal generator to the antenna. Adjust the broadcast oscillator trimmer for maximum reading.

There is no adjustable padder condenser in this model so resonance on lower frequencies is accomplished by bending plates on tuning condensers.

INTERMEDIATES: To align the I. F. circuits, set the signal generator to 448 Kc. and feed its modulated signal direct to the antenna. Adjust the first I. F. transformer trimmers for maximum meter reading. Go over both adjustments at least three or four times for accuracy. Repeat this process on the second I. F. transformer. If adjustments are not made accurately, selectivity will be poor and I. F. oscillation may result.

SHORT WAVE BAND: Place the band change switch on the Short Wave position. Turn the dial to 15.5 megacycles and feed a very weak 15.5 megacycle modulated signal from your signal generator to the antenna. Adjust the S. W. oscillator trimmer for maximum reading on the output meter. This trimmer should not be touched again when checking alignment on other frequencies.

Next go to 12 megacycles and adjust the S. W. detector trimmer.

Instead of bending condenser plates at 6 megacycles alignment is accomplished by spreading or crowding turns on the S. W. detector coil. If much crowding or spreading is necessary it is advisable to go back and recheck at 12 megacycles.

Part Number	Description	List Price
A-140	2 gang tuning condenser	$1.90
A-251	250 mmf. mica condenser	.20
A-259	396 mmf. mica padder condenser	.20
A-303	.25 mf., 200 v. paper condenser	.15
A-351	.05 mf., 200 v. paper condenser	.15
A-352	.05 mf., 300 v. paper condenser	.20
A-354	.25 mf., 25 v. paper condenser	.15
A-364	.001 mf., 400 v. paper condenser	.15
A-374	.02 mf., 600 v. paper condenser	.15
A-375	.05 mf., 400 v. paper condenser	1.25
A-444	Electrolytic filter condenser	.30
A-528	Three section trimmer condenser	.20
B-170X	Dial mounting bracket	3.25
D-36	Dynamic speaker	.10
E-1118	Knobs	.20
E-280	Transparent dial window	.25
E-281	Calibrated dial scale	.10
E-282	Dial pointer	.15
E-481	Special pilot lamp, 6-8 v., .15 amp.	.45
E-491	Wave band switch	.10
E-492	Pilot lamp socket and bracket	.05
G-112	Dial drive spring	.10
H-17	6A7 tube socket	.10
H-18	2525 tube socket	.10
H-19	6D6 tube socket	.10
H-21	43 tube socket	.10
H-26	76 tube socket	.10
H-58	6Q7G tube socket	.10
I-238	Pointer shaft bushing (pulley)	.10
I-240	Condenser shaft bushing (pulley)	.05
I-241	Pointer shaft	.02
MSS-44	Set screws for I-238 and I-240	.75
R-151	Volume control and switch	.20
R-230	250 ohm carbon resistor	.20
R-257	50M ohm carbon resistor	.20
R-258	1 megohm carbon resistor	.20
R-264	100M ohm carbon resistor	.20
R-274	25M ohm carbon resistor	.20
R-281	100 ohm carbon resistor	.20
R-284	200M ohm carbon resistor	.20
R-285	300M ohm carbon resistor	.10
S-119	Goat tube shield	.35
T-270A	Trap	.35
T-271A	S. W. oscillator coil	1.00
T-272A	B. C. oscillator coil	1.25
T-334A	2nd I. F. transformer	1.25
T-335A	1st I. F. transformer	1.00
T-490A	B. C. detector coil	.35
T-492A	S. W. detector coil	.30
U-118	Power cord and plug	5.50
X-357	Model 777 cabinet	5.50
X-358	Model 778 cabinet	4.75
X-359	Model 779 cabinet	5.75
X-360	Model 77 cabinet	

PRICES SUBJECT TO CHANGE WITHOUT NOTICE

INTERNATIONAL RADIO CORP.

MODEL 87
Schematic

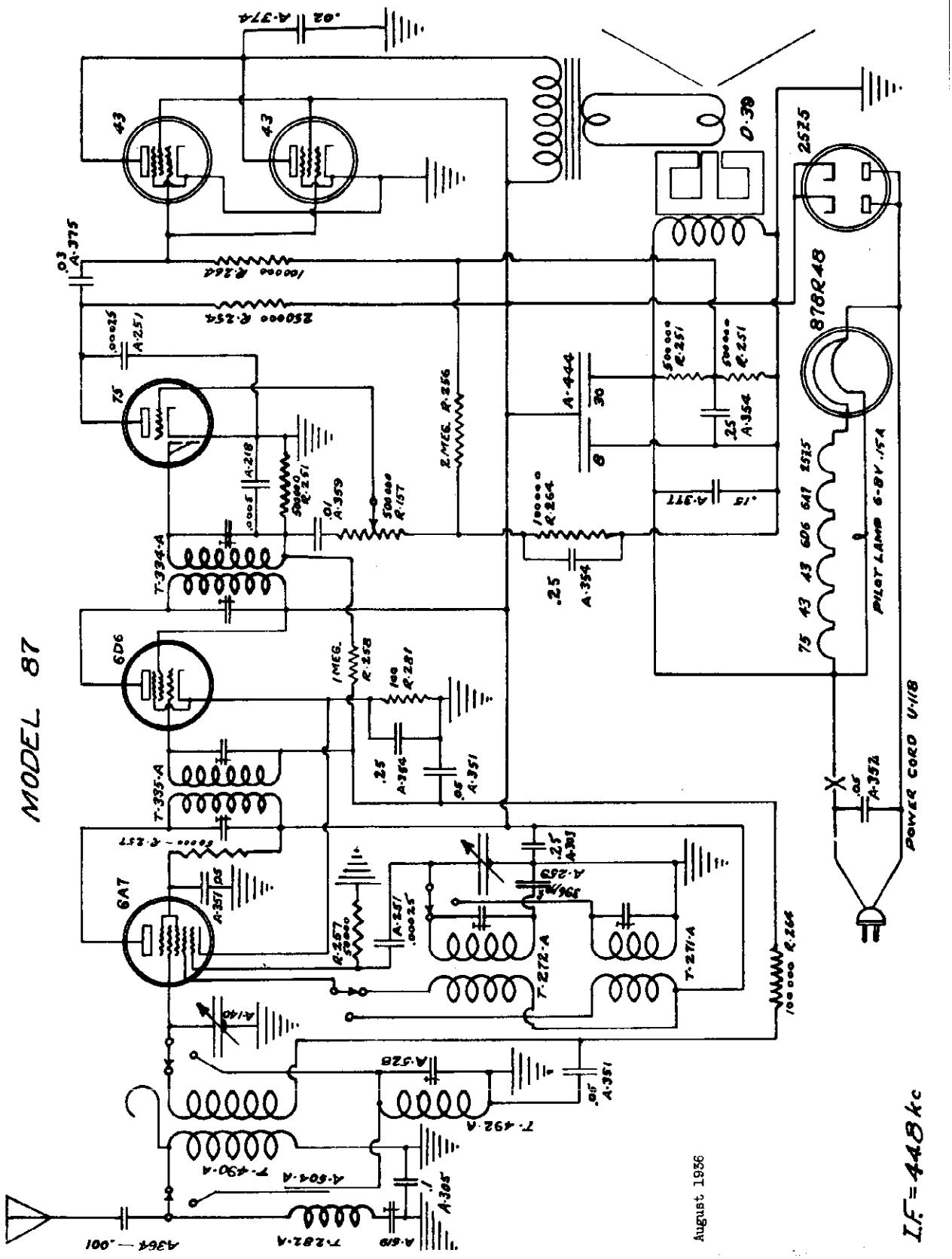

ALIGNMENT

ESSENTIAL DATA: The intermediate frequency employed is 448 Kc.

The standard type of output meter should be used to indicate signal strength. It should be connected from the plates of the 43 tubes to ground.

Poor sensitivity may be an indication of incorrectly adjusted I. F. trimmers.

Aligning of Broadcast band should be done on 1400, 1000 and 600 kilocycles.

The three trimmers on the bottom of the chassis are, reading from the end of the chassis toward the center, B. C. oscillator, S. W. detector and S. W. oscillator. No trimmer is used across the B. C. detector coil.

INTERMEDIATES: To align the I. F. circuits, set the signal generator to 448 Kc. and feed its modulated signal direct to the antenna. Adjust the first I. F. transformer trimmers for maximum meter reading. Go over both adjustments at least three or four times for accuracy. Repeat this process on the second I. F. transformer. If adjustments are not made accurately, selectivity will be poor and I. F. oscillation may result. Finally, adjust the trimmer on the tuned wave trap for minimum meter reading.

BROADCAST BAND: Place the band change switch on the Broadcast position. Turn the dial to 1400 Kc. and feed a very weak 1400 Kc. modulated signal from your signal generator to the antenna. Adjust the broadcast oscillator trimmer for maximum reading.

There is no adjustable padder condenser in this model so resonance on lower frequencies is accomplished by bending plates on tuning condensers.

SHORT WAVE BAND: Place the band change switch on the Short Wave position. Turn the dial to 15.5 megacycles and feed a very weak 15.5 megacycle modulated signal from your signal generator to the antenna. Adjust the S. W. oscillator trimmer for maximum reading on the output meter. This trimmer should not be touched again when checking alignment on other frequencies.

Next go to 12 megacycles and adjust the S. W. detector trimmer.

Instead of bending condenser plates at 6 megacycles alignment is accomplished by spreading or crowding turns on the S. W. detector coil. If much crowding or spreading is necessary it is advisable to go back and recheck at 12 megacycles.

AVERAGE SOCKET VOLTAGES

Tube	Position	E_k	E_{g2}	E_{g1}	E_p
6A7	Det-Osc.	1	5	35	97
6D6	I. F.	3	3	97	97
75	2nd Det.-A.V.C.-A.F.	0	-	-	35
43 43	Output	0	-	97	85
25Z5	Rect.	97	-	-	87

LINE 118 VOLTS. VOLUME CONTROL FULL ON. 15% VARIATION ALLOWABLE. Measurements made from tube prongs to circuit ground and made with 1000 ohms per volt instrument on 250 volt scale.

PARTS PRICE LIST

PRICES SUBJECT TO CHANGE WITHOUT NOTICE

MODEL 87

Part Number	Description	List Price
A-140	2 gang tuning condenser	$1.90
A-218	.0005 mfd. mica condenser	.20
A-251	.00025 mfd. mica condenser	.20
A-258	596 mmf. mica condenser	.20
A-303	.25 mfd., 200 v. paper condenser	.20
A-305	.1 mfd., 200 v. paper condenser	.15
A-351	.05 mfd., 200 v. paper condenser	.15
A-352	.05 mfd., 300 v. paper condenser	.15
A-354	.25 mfd., 25 v. paper condenser	.20
A-359	.01 mfd., 400 v. paper condenser	.15
A-364	.001 mfd., 400 v. paper condenser	.15
A-374	.02 mfd., 600 v. paper condenser	.15
A-375	.03 mfd., 400 v. paper condenser	.15
A-377	.15 mfd., 200 v. paper condenser	.15
A-444	Electrolytic filter condenser	1.25
A-526	Three section trimmer condenser	.30
B-170X	Dial bracket	.20
D-39	Dynamic speaker	3.25
E-163	Large knob	.10
E-164	Small knob	.10
E-288	Dial pointer	.10
E-294	Transparent dial window	.25
E-295	Dial scale	.30
E-481	Special pilot lamp, 6-8 v., .15 amp.	.15
E-491	Wave band switch	.45
E-492	Pilot lamp socket and bracket	.10
G-112	Dial drive spring	.05
H-17	6A7 tube socket	.10
H-18	25Z5 tube socket	.10
H-19	6D6 tube socket	.10
H-21	43 tube socket	.10
H-25	75 tube socket	.10
H-58	878R48 tube socket	.10
I-238	Pointer shaft bushing (pulley)	.10
I-240	Condenser shaft bushing (pulley)	.10
I-241A	Pointer shaft	.05
M8-44	Set screws for I-238 and I-240	.02
R-157	Volume control and switch	.65
R-251	500M ohm carbon resistor	.20
R-254	250M ohm carbon resistor	.20
R-256	2 megohm carbon resistor	.20
R-257	50M ohm carbon resistor	.20
R-258	1 megohm carbon resistor	.20
R-264	100M ohm carbon resistor	.20
R-281	100 ohm carbon resistor	.20
S-119	Goat tube shield	.10
T-271A	S.W. oscillator coil	.35
T-272A	B.C. oscillator coil	1.00
T-282A	Tuned wave trap	.50
T-334A	2nd I.F. transformer	1.25
T-335A	1st I.F. transformer	1.25
T-430A	B.C. Detector coil	1.00
T-432A	S.W. Detector coil	.35
U-118	Power cord and plug	.30
X-387	Cabinet	6.75

This chassis is designed to operate from 115 volt power lines, either alternating or direct current. It is a two band receiver tuning the American broadcast and foreign short wave bands

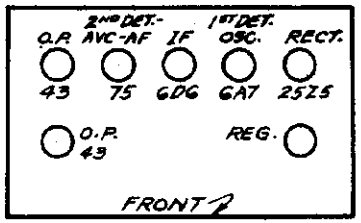

©John F. Rider, Publisher

INTERNATIONAL RADIO CORP.

MODEL 40
Schemati
Socket

Model 400 is a two band, battery operated receiver. The right-hand knob is the wave band switch. It should be turned to the left for broadcast band reception. When turned to the right the receiver tunes the police, airplane and amateur band for 70 to 200 meters.

April, 1936

MODEL 400
Alignment
Parts

INTERNATIONAL RADIO CORP.

MODEL 400 SERIES

Model 400 is a two band, battery operated receiver. The right-hand knob is the wave band switch. It should be turned to the left for broadcast band reception. When turned to the right the receiver tunes the police, airplane and amateur band for 70 to 200 meters.

This receiver requires 4-1/2 volts of "A" battery and 135 volts of "B" battery. For "B" supply, three 45 volt "B" batteries are required. Each should have a 22-1/2 volt connection, or "tap", and the size of each battery should not exceed 2-1/2 x 4-1/4 x 6 inches though the largest battery available within this size should be used. Batteries such as the Eveready No. 762, Burgess No. 5308, Ray-O-Vac No. 5303, etc., are suitable.

For "A" battery supply, three standard "No. 6" dry cells--as used for telephone, ignition and radio--are required. These are 1-1/2 volt batteries--three connected in series providing the necessary 4-1/2 volts. These batteries are approximately 6 inches long and 2-1/2 inches in diameter (or square). Dry cells such as the Eveready No. 7111, Burgess "Little Six", Ray-O-Vac No. 66, etc., are suitable.

ALIGNMENT

The standard type of output meter should be used to indicate signal strength. It may be connected from plate of the 950 tube to ground.

ESSENTIAL DATA: The intermediate frequency employed is 448 Kc.

The rear section of the two gang condenser is the oscillator section; the front section, first detector.

INTERMEDIATES: To align the I.F. circuits, set the signal generator to 448 Kc. and feed its modulated signal direct to the antenna. Short out the oscillator section of the two gang condenser. Adjust the first I.F. transformer trimmers for maximum meter reading. Go over both adjustments at least three or four times for accuracy. Repeat this process on the second I.F. transformer. If adjustments are not made accurately, selectivity will be poor and I.F. oscillation may result. Due to the I.F. trap in the antenna circuit a strong signal is necessary.

BROADCAST BAND: Place the band change switch on Broadcast position. Turn the dial to 1400 Kc. and feed a very weak 1400 Kc. modulated signal from your signal generator to the antenna. Adjust the broadcast oscillator trimmer for maximum reading. On most sets the detector trimmer has its adjusting screw purposely removed.

There is no adjustable padder condenser in this model so resonance on the low frequency end is accomplished by bending plates on the tuning condensers. Check the alignment at 1000 Kc. Insert a thin bakelite, celluloid or mica feeler strip between the plates of the variable condensers to determine whether the circuits are properly matched. The action is this--the dielectric constant of the celluloid feeler strip being higher than that of the air it displaces, results in an increase of capacity. Open the variable condenser just enough to indicate two or three points below maximum signal. As the feeler is inserted the meter reading should indicate increasing signal and then decreasing as the feeler is inserted farther. This procedure should be followed on both sections. Should the meter fail to show an increase in signal as the strip is inserted in one section this indicates too great a capacity for that section. This may be corrected by bending the outside rotor plates out at the point where they begin to mesh with the stator.

After checking the alignment at 1000 Kc. repeat the process at 600 Kc.

SHORTWAVE BAND: No alignment necessary due to untuned detector circuit.

PRICES SUBJECT TO CHANGE WITHOUT NOTICE

PARTS PRICE LIST

Part Number	Description	List Price
A-141	2 gang tuning condenser	$1.75
A-248	.0001 mf. mica condenser	.20
A-250	.000325 mf. mica condenser	.20
A-251	.00025 mf. mica condenser	.20
A-303	.25 mf., 200 v. paper condenser	.15
A-305	.1 mf., 200 v. paper condenser .	.15
A-351	.05 mf., 200 v. paper condenser	.15
A-359	.01 mf., 400 v. paper condenser	.15
A-368	.002 mf., 300 v. paper condenser	.15
D-241	Per-O-Flux speaker	4.75
E-111W	Battery saver knob	.10
E-116	Large knobs	.15
E-283	Single dial pointer	.05
E-285	Dial scale	.15
E-493	Wave band switch	.35
H-45	25-S tube socket	.10
H-46	34 tube socket	.10
H-59	1C6 tube socket	.10
H-62	950 tube socket	.10
R-152	Volume control with switch	.80
R-153	Battery saver control	.50
R-248	50M ohm carbon resistor	.20
R-254	250M ohm carbon resistor	.20
R-258	1 megohm carbon resistor	.20
R-259	500M ohm carbon resistor	.20
R-264	100M ohm carbon resistor	.20
R-289	60M ohm carbon resistor	.20
R-290	40M ohm carbon resistor	.20
R-336	800-1600 ohm candohm resistor ..	.25
S-120	Coat tube shield	.10
T-276A	Trap	.35
T-277A	Detector coil	1.00
T-278A	Oscillator coil	1.00
T-336A	1st I.F. transformer	1.25
T-337A	2nd I.F. transformer	1.25
X-362	Cabinet	6.00

April, 1936

© John F. Rider, Publisher

INTERNATIONAL RADIO CORP.

MODEL 500
Schematic
Parts

MODEL 500 — BATTERY

JULY, 1936

Part Number	Description	List Price
A-140	2 gang tuning condenser	$1.90
A-248	100 mmf. mica condenser	.20
A-251	250 mmf. mica condenser	.20
A-259	396 mmf. mica condenser	.20
A-305	.1 mf., 200 v. paper condenser	.15
A-329	.005 mf., 600 v. paper condenser	.15
A-351	.05 mf., 200 v. paper condenser	.15
A-359	.01 mf., 400 v. paper condenser	.15
A-367	.05 mf., 400 v. paper condenser	.15
A-442	4 mf., 150 v. electrolytic condenser	.45
A-528	Three gang trimmers	.30
B-170	Dial mounting bracket	.20
D-243	Perm-O-Flux speaker	5.00
E-114	Large knob	.15
E-115	Small knob	.15
E-282	Dial pointer	.10
E-293	Dial scale	.30
E-294	Dial window	.30
E-491	Wave band switch	.45
G-111	Dial string	.01
G-112	Dial spring	.05
H-34	33 tube socket	.10
H-45	25S tube socket	.10
H-46	34 tube socket	.10
H-59	1C6 tube socket	.10
I-238	Pointer shaft bushing (pulley)	.10
I-240	Condenser shaft bushing (pulley)	.10
I-241A	Pointer shaft	.05
MS6-44	Set screws for I-238 and I-240	.02
R-156	Volume control and switch	.80
R-254	250M ohm carbon resistor	.20
R-256	2 megohm carbon resistor	.20
R-257	50M ohm carbon resistor	.20
R-259	500M ohm carbon resistor	.20
R-264	100M ohm carbon resistor	.20
R-292	20M ohm carbon resistor	.20
R-339	Candohm resistor	.30
S-120	Goat tube shield	.10
T-270A	Trap	.35
T-271A	S.W. oscillator coil	.35
T-272A	B.C. oscillator coil	1.00
T-338A	1st I.F. transformer	1.25
T-339A	2nd I.F. transformer	1.25
T-340A	3rd I.F. transformer	1.25
T-490A	B.C. detector coil	1.00
T-492A	S.W. detector coil	.35
X-364	Cabinet	10.00

4/25/36

PRICES SUBJECT TO CHANGE WITHOUT NOTICE

MODEL 500
Alignment
Socket
Battery Connections

INTERNATIONAL RADIO CORP.

MODEL 500

Model 500 is a two band, battery operated receiver. The right-hand knob is the wave band switch. It should be turned to the left for broadcast band reception. When turned to the right the receiver tunes the American-Foreign Short Wave band of 18 to 55 meters.

The following tubes are employed:

1C6 - 1st Detector-Oscillator
34 - I.F. Amplifier
34 - I.F. Amplifier
25S - 2nd Detector-A.V.C.-A.F. Amplifier
33 - Power Amplifier

ALIGNMENT

The standard type of output meter should be used to indicate signal strength. It may be connected from plate of the 33 tube to ground.

ESSENTIAL DATA: The intermediate frequency employed is 448 Kc.

The rear section of the two gang condenser is the oscillator section; the front section, first detector.

INTERMEDIATES: To align the I.F. circuits, set the signal generator to 448 Kc. and feed its modulated signal direct to the antenna. Short out the oscillator section of the two gang condenser. Adjust the first I.F. transformer trimmers for maximum meter reading. Go over both adjustments at least three or four times for accuracy. Repeat this process on the second I.F. transformer. The third I.F. transformer has only one trimmer. If adjustments are not made accurately, selectivity will be poor and I.F. oscillation may result. Due to the I.F. trap in the antenna circuit a strong signal is necessary.

BROADCAST BAND: Place the band change switch on Broadcast position. Turn the dial to 1400 Kc. and feed a very weak 1400 Kc. modulated signal from your signal generator to the antenna. Adjust the broadcast oscillator trimmer for maximum reading. A three gang trimmer will be found on the bottom of the chassis. The oscillator trimmer mentioned is the section nearest the end of the chassis.

There is no adjustable padder condenser in this model so resonance on the low frequency end is accomplished by bending plates on the tuning condensers. Check the alignment at 1000 Kc. Insert a thin bakelite, celluloid or mica feeler strip between the plates of the variable condensers to determine whether the circuits are properly matched. The action is this--the dielectric constant of the celluloid feeler strip being higher than that of the air it displaces, results in an increase of capacity. Open the variable condenser just enough to indicate two or three points below maximum signal. As the feeler is inserted the meter reading should indicate increasing signal and then decreasing as the feeler is inserted farther. This procedure should be followed on both sections. Should the meter fail to show an increase in signal as the strip is inserted in one section this indicates too great a capacity for that section. This may be corrected by bending the outside rotor plates out at the point where they begin to mesh with the stator.

After checking the alignment at 1000 Kc. repeat the process at 600 Kc.

SHORT WAVE BAND: Place the band change switch on the Short Wave position. Turn the dial to 15.5 megacycles and feed a very weak 15.5 megacycle modulated signal from your signal generator to the antenna. Adjust the S. W. oscillator trimmer (at opposite end of three gang trimmer) for maximum reading on the output meter. This trimmer should not be touched again when checking alignment on other frequencies.

Next go to 12 megacycles and adjust the S. W. detector trimmer.

Instead of bending condenser plates at 6 megacycles alignment is accomplished by spreading or crowding turns on the S. W. detector coil. If much crowding or spreading is necessary it is advisable to go back and recheck at 12 megacycles.

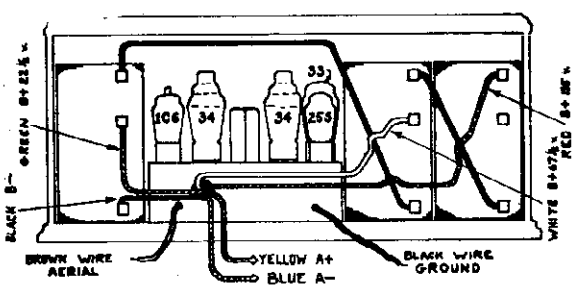

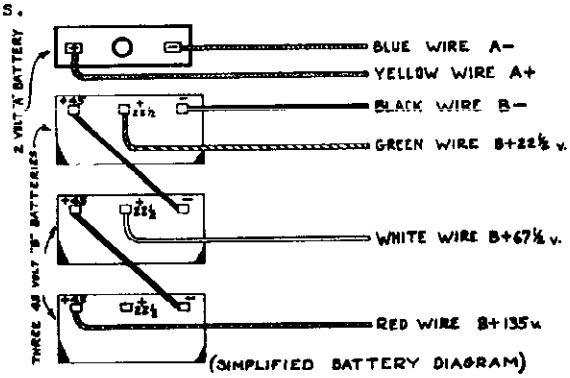

INTEROCEAN RADIO CORP.

MODELS 500,515,51
Chassis 2037
Schematic
Socket

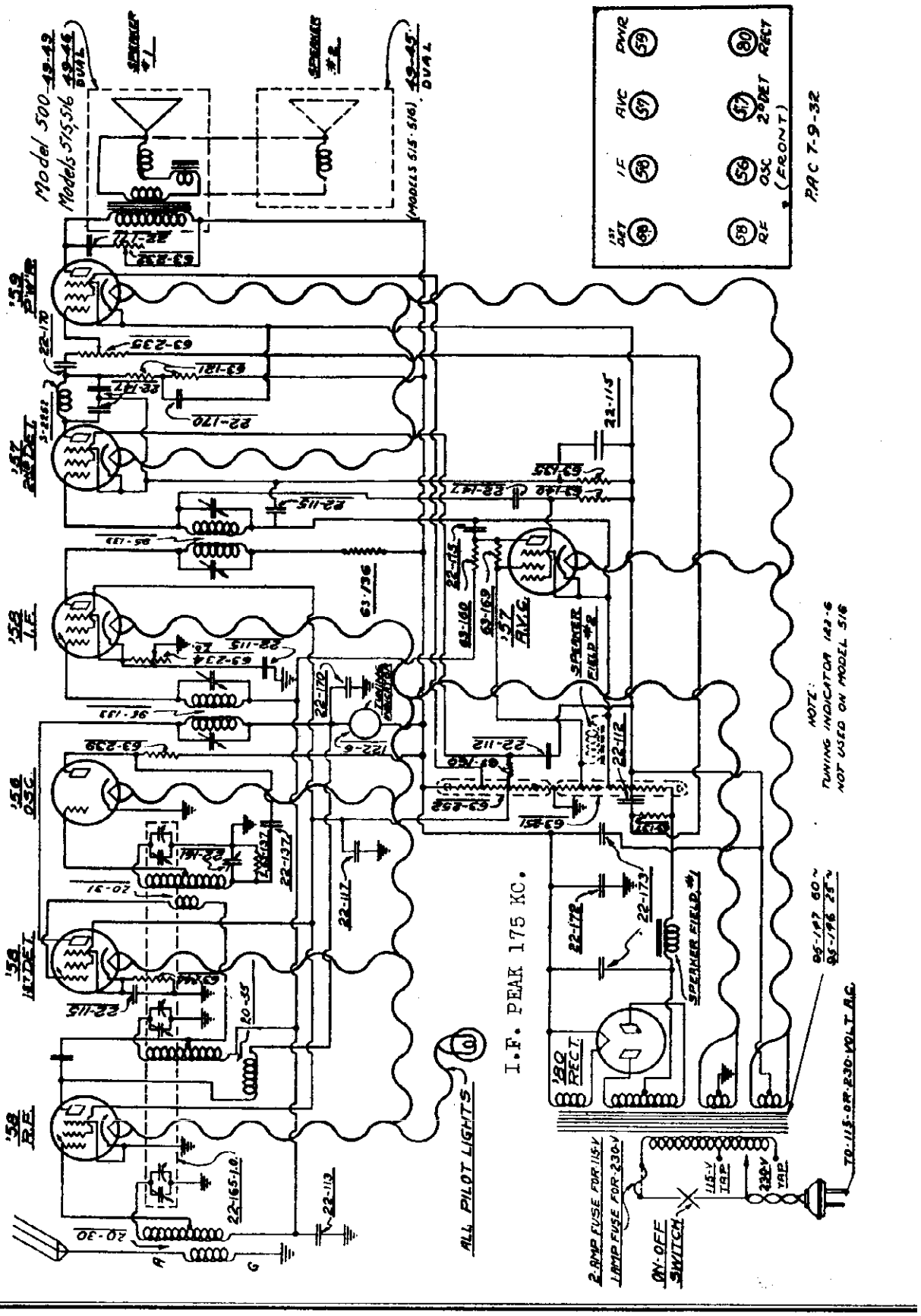

©John F. Rider, Publisher

MODELS 500,515,516
Voltage,Alignment
Parts List

INTEROCEAN RADIO CORP.

Resistors

63-121	100M ohm	1 Watt	(2nd Detector Plate).....
63-135	25M "	½ "	(2nd Detector Cathode).....
63-137	250M "	½ "	(Oscillator & Power Grid)..
63-140	1 meg"	½ "	(A.V.C. Screen).....
63-160	100M "	½ "	(A.V.C.Plate).....
63-169	400M "	½ "	(A.V.C. Grid).....
63-239	24M ohm	1 Watt	(Oscillator Plate).....
63-244	500 "	¼ "	(1st Detector Cathode).
63-251	Voltage Divider (six tap).....		
63-252	Voltage Divider (five tap).....		

Coils and Chokes

20-30	Antenna Coil.....
20-31	Oscillator Coil.....
20-35	Detector Coil.....
95-133	1st & 2nd I. F. Transformer.....

Condensers

22-112	.1 mfd	300 volt	(2nd Detector Screen & Power Grid).....
22-113	.5 "	.....	(R.F.1st Detector & I.F.Grid Return).....
*22-115	.1 "	200 volt	(Four used, see below).....
22-117	.5 "	.....	(R.F.1st Detector, & I.F. Screen).....
22-137	.05 "	400 volt	(Oscillator Plate).....
22-147	.0005	600 volt	(2nd Detector Plate & A.V.C.Screen).....
22-170	.1 mfd	400 volt	(R.F.& 1st Detector Plate,2nd Detector Plate)..
22-171	.05 "	600 volt	(Tone Control).....
22-172	2. "	450 volt	(Filter).....
22-173	8. "	500 volt	(Filter).....

Socket Voltages

Tube Type	Position	Fil. Volt.	Plate Volt.	Cath. Volt.	Screen Volt.	Supp. Volt.	Plate Current
Z-58	R.F.	2.4	190	0	95	0	7.
Z-58	1st Det.	2.4	190	2.3	95	2.3	4.
Z-56	Osc.	2.4	100	0	-	-	4.
Z-58	I.F.	2.4	190	0	90	0	2.
Z-57	2nd Det.	2.4	90	-60	70	-60	.2
Z-57	A.V.C.	2.4	-10	-65	-2	-65	0
Z-59	Power	2.4	175	-70	165	-70	25
Z-80	Rect.	5.	*350	-	-	-	*36

Line 115 Volts — All Controls Maximum

All readings, with exception of heaters, taken from socket connections to ground Use 1,000 ohm per volt D. C. meter.)

BALANCE I.F. frequency at 175 K.C. Condenser gang at 1500 K.C. and oscillator padder at 600 K.C.

©John F. Rider, Publisher

MODEL 4
MODEL 8455
Schematics

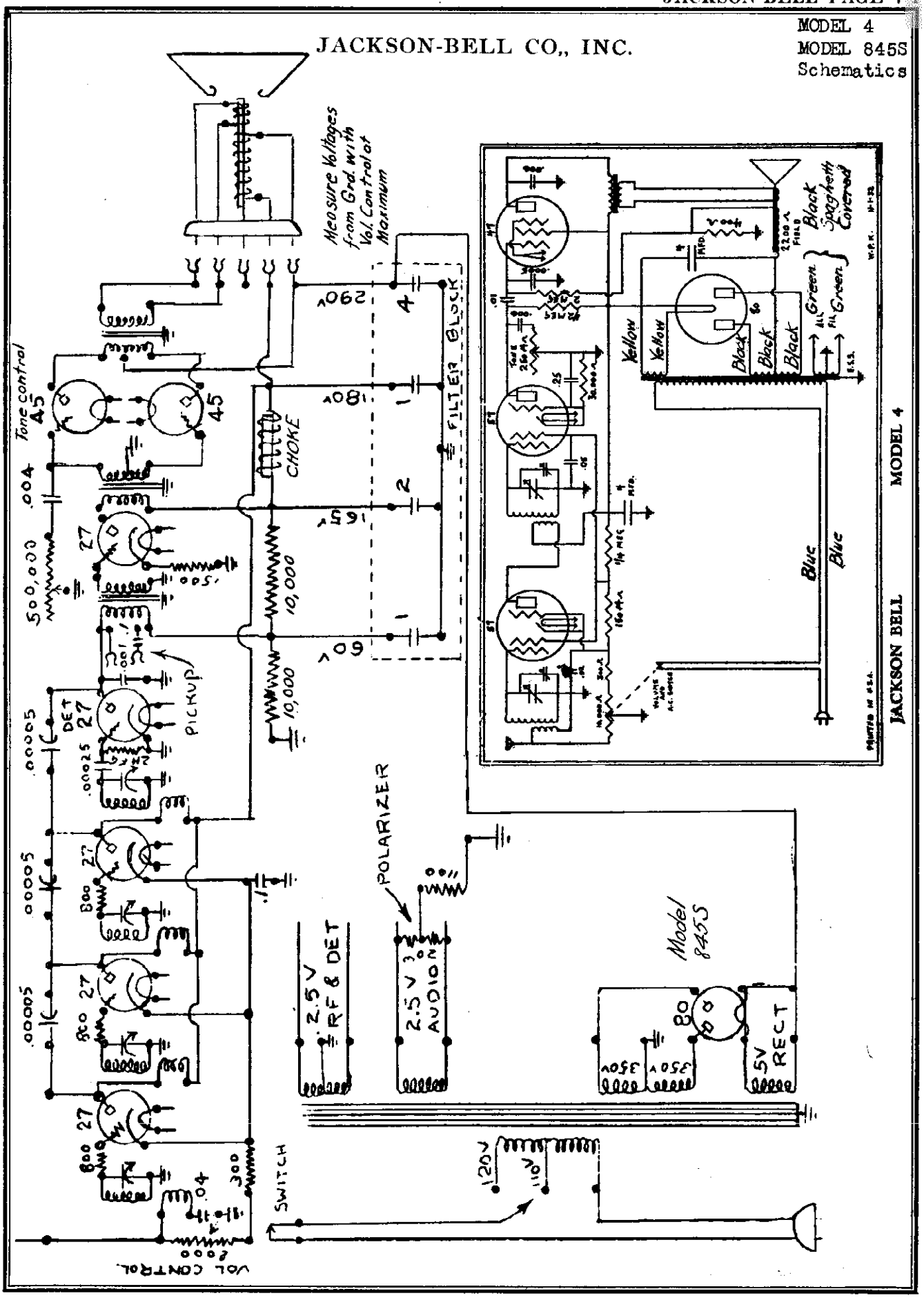

©John F. Rider, Publisher

MODEL Junior 50
Schematic
Voltage

JACKSON-BELL CO., INC.

Voltage readings were made with a 1000 ohm per volt meter, 250 volt range.
*The reading here on a set analyzer will show about 2 volts due to the fact that the 2 meg. ohm resistor is in series with the meter. To check grid voltage, drop across speaker divided by 2 will be the approximate voltage applied to grid. If plate current is about 25 mils and voltage about 220, it is safe to assume that the grid bias is O.K.

R. F. Plate Voltage, ...	180	
R. F. Screen Grid Voltage, . . .	75	
R. F. Grid Bias, ...	2.5	
R. F. Plate Current, ...	2.5	M
First A. F. Plate Current, . . .	3½	M
First A. F. Plate Voltage, . . .	115	V
First A. F. Bias.	5	V

'45s Plate Voltage, ...	225	V
'45s Bias, ...	50	V
'45s Plate Current, ...	30	M
Detector Screen Grid Voltage . .	50	V
Detector Bias, ...	5	V
Detector Plate Current, ...	.2	M
# no signal in receiver		
Detector Plate Voltage, ...	100 *	

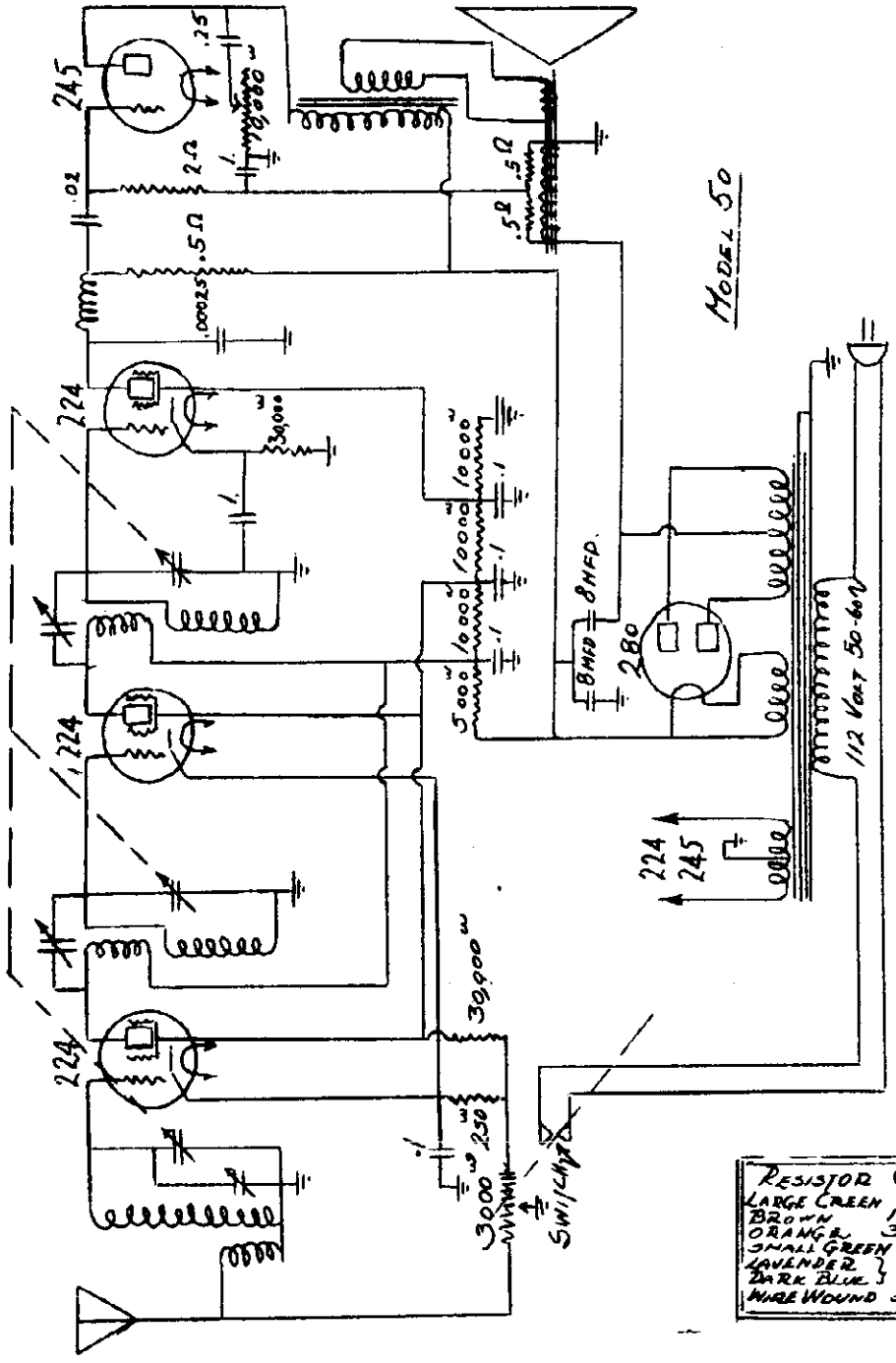

**Detector bias reading is taken at the overload point of an incoming signal where it generally reaches a maximum of 5 volts. With zero volume control, the reading here is approximately 4 volts. This, of course, is not the true reading, because resistance of volt meter becomes a parallel circuit, cutting down the resistance, and of course, dropping the voltage. Reading taken in this case was with 10,000 ohm meter (1000 per volt, 10 volt scale.

***This reading is subject to considerable variation with meters of various resistances, as the voltage at this point is measured through a 500,000 ohm resistor. The voltage at the opposite end of the resistor should be 220 volts.

Speaker field resistance 1500 ohm, 110 volts.

RESISTOR CODE
LARGE GREEN 5,000 OHM
BROWN 10,000
ORANGE 30,000
SMALL GREEN .5 MEG
LAVENDER } 2 MEG.
DARK BLUE }
WIRE WOUND 230 OHMS

©John F. Rider, Publisher

JACKSON-BELL CO., INC.

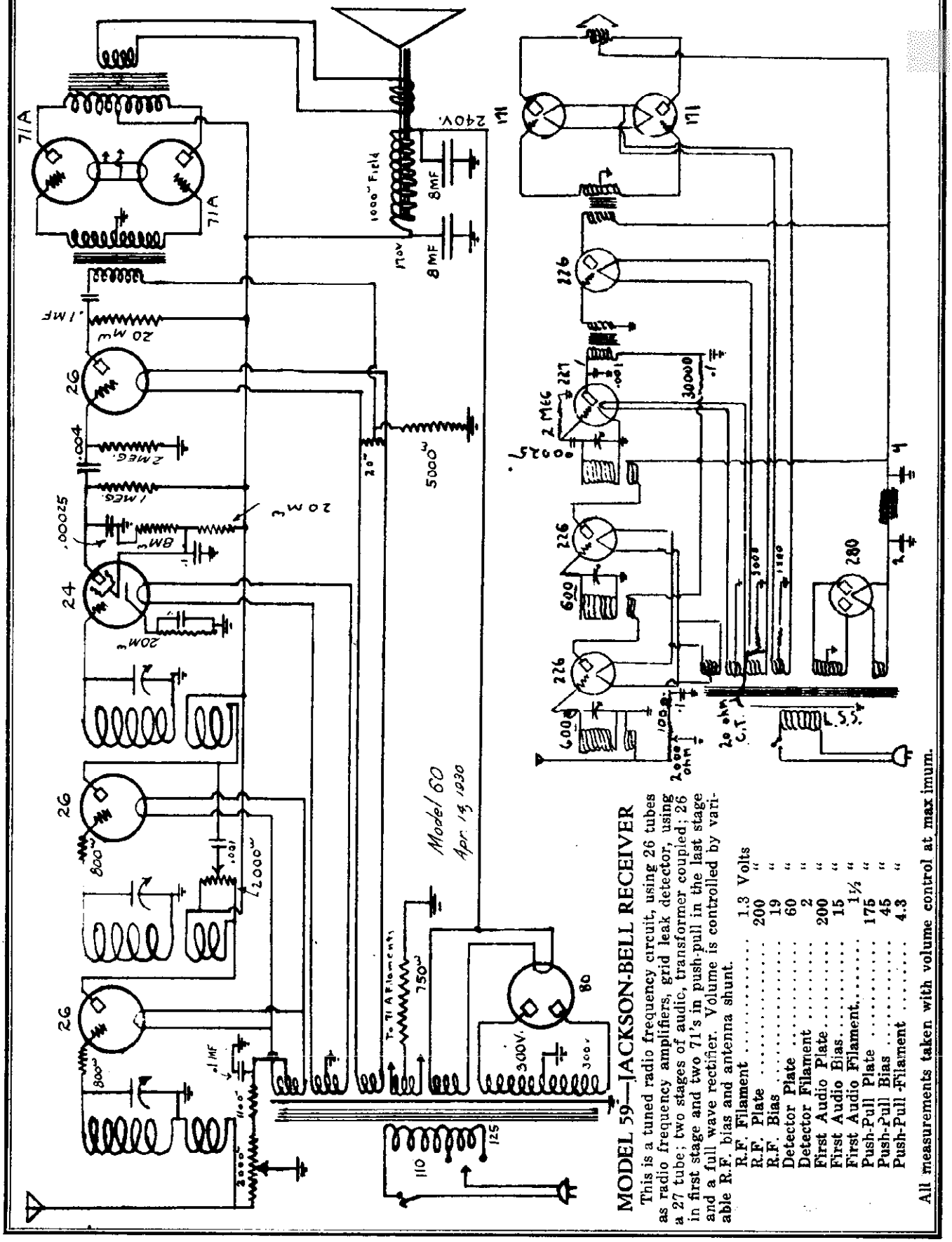

MODEL 59—JACKSON-BELL RECEIVER

This is a tuned radio frequency circuit, using 26 tubes as radio frequency amplifiers, grid leak detector, using a 27 tube; two stages of audio, transformer coupled; 26 in first stage and two 71's in push-pull in the last stage and a full wave rectifier. Volume is controlled by variable R.F. bias and antenna shunt.

R.F. Filament	1.3 Volts
R.F. Plate	200 "
R.F. Bias	19 "
Detector Plate	60 "
Detector Filament	2 "
First Audio Plate	200 "
First Audio Bias	15 "
First Audio Filament	1½ "
Push-Pull Plate	175 "
Push-Pull Bias	45 "
Push-Pull Filament	4.3 "

All measurements taken with volume control at maximum.

©John F. Rider, Publisher

MODEL 62
2nd & 3rd Series
Schematic, Socket

JACKSON-BELL CO., INC.

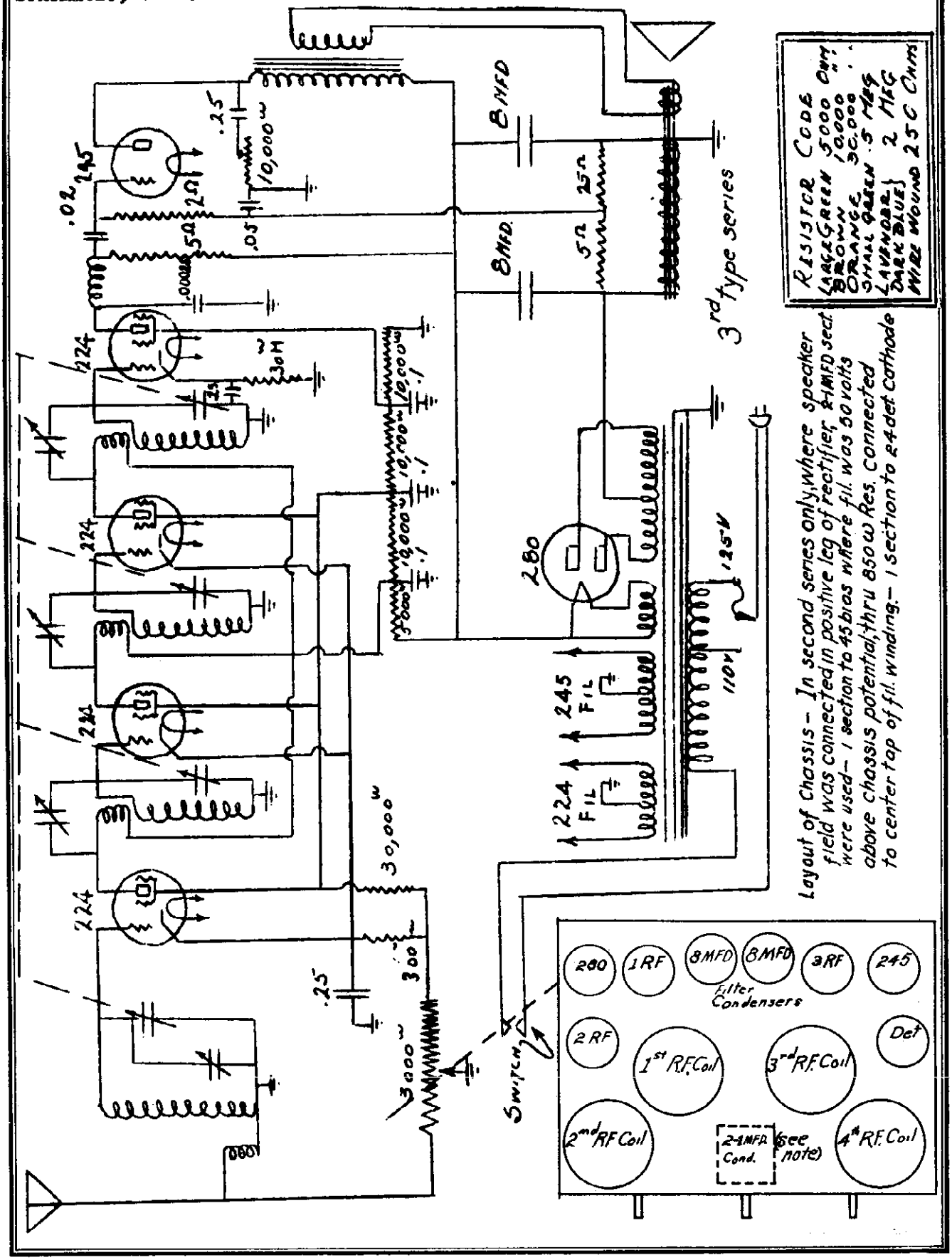

©John F. Rider, Publisher

VOLTAGE AND CURRENT VALUES - MODEL 60 RECEIVERS

The following values are correct with 1000 ohm speaker field and 110 volts A.C. on the line, or 125 volts on the line when power transformer is thus connected. With volume control at half way position the following voltages should be indicated from ground:

To 280 filaments,	240 volts
To low side of choke,	180 "
To detector screen grid ,	26 to 32 volts
To 171 filaments,	30 volts
To R.F. Filaments ,	10 to 15 volts

As volume control is rotated from maximum to minimum

The following values of plate current should be read within 20%:

R.F. .00025 to .005 amperes as volume control is rotated from minimum to maximum.
Detector 80 to 100 micro amperes.
First audio .002 amperes.
Second audio .017 to .020 amperes.

CONTINUITY TESTS:

The following resistance values should be observed when making continuity tests without removing the chassis from the cabinet:

R.F. Grid to ground,	800 ohms.
R.F. Plate to ground,	25000 "
R.F. Filament to ground,	1100 to 3200 ohms

as volume control is shifted from maximum to minimum

Detector grid to ground,	1 ohm
Detector screen grid to ground,	3000 "
Detector cathode to ground,	20000 "
Detector filament to ground,	0
First audio grid to ground,	2 meg
First audio filament to ground ,	5000 ohms
First audio plate to ground,	45000 "
Second audio grid to ground,	1500 "
Second audio filament to ground,	750 "
Second audio plate to ground,	25000 "

COILS:

Effective immediately, specifications of the radio frequency transformers used in the Model 60 receiver are changed to the following:-

Primaries,	16 turns
Secondaries,	81 "
Circuit inductance,	.240 microhenries

The overall gain throughout the radio frequency amplifier with the new coils is approximately 300% greater than with the old ones. The substantial increase of sensitivity should, therefore, be observed.

When orders for replacement coils are filled they will always be in complete sets of three and of new type.

GRID SUPPRESSORS

Service notes and circuit print of this receiver show 2 - 800 ohm grid suppressors. The grid suppressor of the first radio frequency stage has been reduced to 300 ohms. The second one remains 800.

FILTER SYSTEM:

Specifications of this receiver call for 2 - 8 microfarad electrolytic condensers in the filter. At times when the factory has been unable to obtain these electrolytic condensers it has been necessary to substitute paper condensers and an additional filter choke. The value of the units in the paper condenser block is as follows:

When the block is fastened in the chassis and the chassis is viewed in an inverted position, the bottom terminal is five microfarads, the center terminal one microfarad and the top terminal two microfarads. Only a limited number of these have been installed and regular production will continue to contain the electrolytic condensers.

MODEL 62
2nd & 3rd Series
SERVICE NOTES
FOR SERIAL NO. 120,000 AND UP

If it should become necessary to resonate the radio frequency circuit, proceed as follows:-

Set the dial at about 20 degrees and set all coupling condensers at approximately one full turn to the left of the maximum capacity adjustment. With a grid dip oscillator, check all circuits for resonance, making connection to the caps on top of the screen grid tubes. The tubes should be cold when this is done. If it is necessary to move any of the coupling condensers more than one-half turn in order to obtain resonance, adjustment of capacity in that particular stage should be made by bonding the split rotor plate of the variable condenser. This does not apply to the antenna stage where the condenser on the coil does not affect coupling. When resonance has been obtained at this point, the dial should be shifted to 90, and all stages again checked with a grid dip meter. Here all capacity adjustments must be made by bending plates, being careful not to disturb the position of that portion of the split plate which was active when the first adjustment was made.

VOLTAGE AND CURRENT VALUES:

With the volume control at maximum, the following readings should be obtained, with an allowable variation of 10%:-

R.F. Plate voltage.	160
R.F. Screen Grid Voltage.	75
R.F. Grid Bias.	2.5
R.F. Plate current.	2.5M
245 Plate Voltage	225
245 Plate current	30
245 Bias.	50 V.
Detector Screen Grid Voltage.	50 "
Detector Bias	5 "
Detector Plate Current.	.2 M (No signal in Receiver)
Detector Plate Voltage.	100*

*This reading will be obtained with a 500,000 ohm volt-meter as found in a Jewell 199 test set. This reading is subject to considerable variation with meters of various resistances, as the voltage at this point is measured through a 500,000 ohm resistor. The voltage at the opposite end of the resistor should be 250.

MODEL 68

If it should become necessary to resonate the radio frequency circuit, proceed as follows:

Set the dial at about 20 degrees and set all coupling condensers at approximately one full turn to the left of the maximum capacity adjustment. With the grid dip oscillator, check all circuits for resonance, making connection to the caps on top of the screen grid tubes. The tubes should be cold when this is done. If it is necessary to move any of the coupling condensers more than one-half turn in order to obtain resonance, adjustment of capacity in that particular stage should be made by bending the split rotor plate of the variable condenser. This does not apply to the antenna stage where the variable condenser on the coil does not affect coupling. When resonance has been obtained at this point, the dial should be shifted to 90 and all stages again checked with the grid dip meter. Here all capacity adjustments must be made by bending plates, being careful not to disturb the position of that portion of the split plate which was active when the first adjustment was made.

©John F. Rider, Publisher

MODEL 68
Schematic, Voltage
Socket, Trimmers

JACKSON-BELL CO., INC.

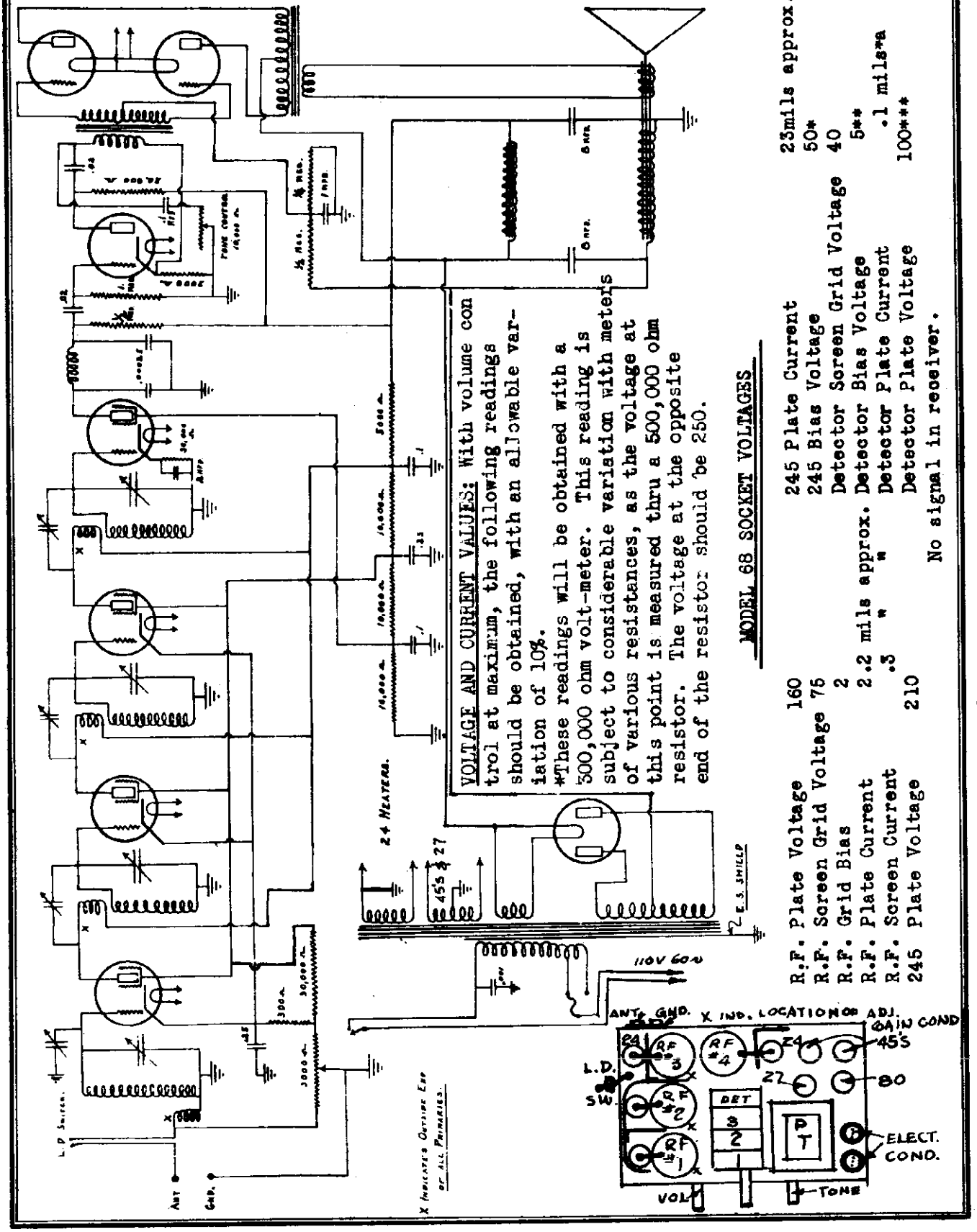

©John F. Rider, Publisher

KODEL RADIO CORP.

MODEL 15,A & B Supply
MODEL 61, B Transifier
MODEL 161,B Transifier
Schematics

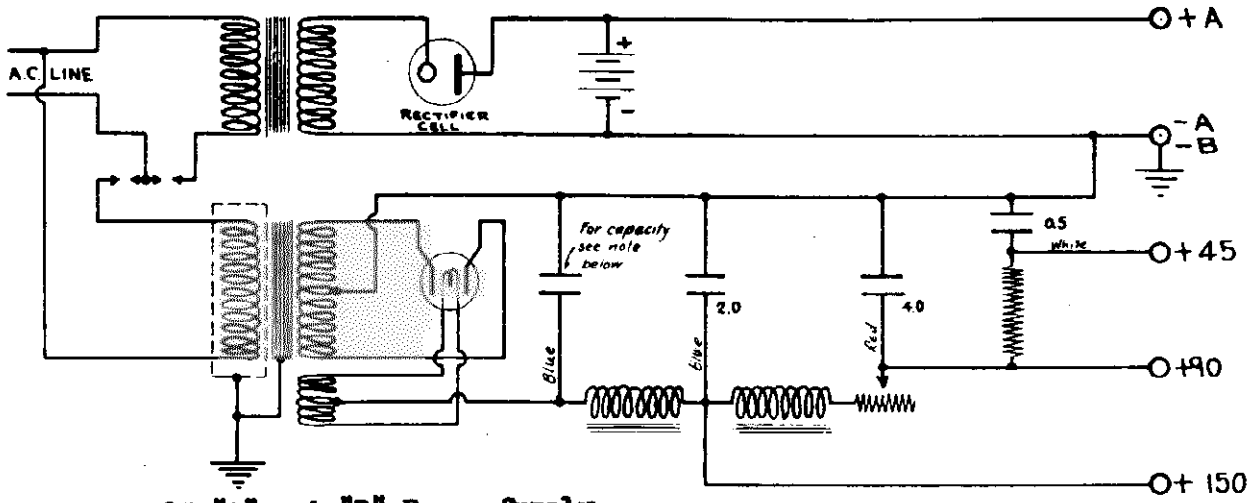

Model 15 "A" and "B" Power Supply
10 - 18 - 26

NOTE **Condenser capacity for 60-cycle Unit is 2.0 mf.**
Condenser capacity for 25-cycle Unit is 4.0 mf.

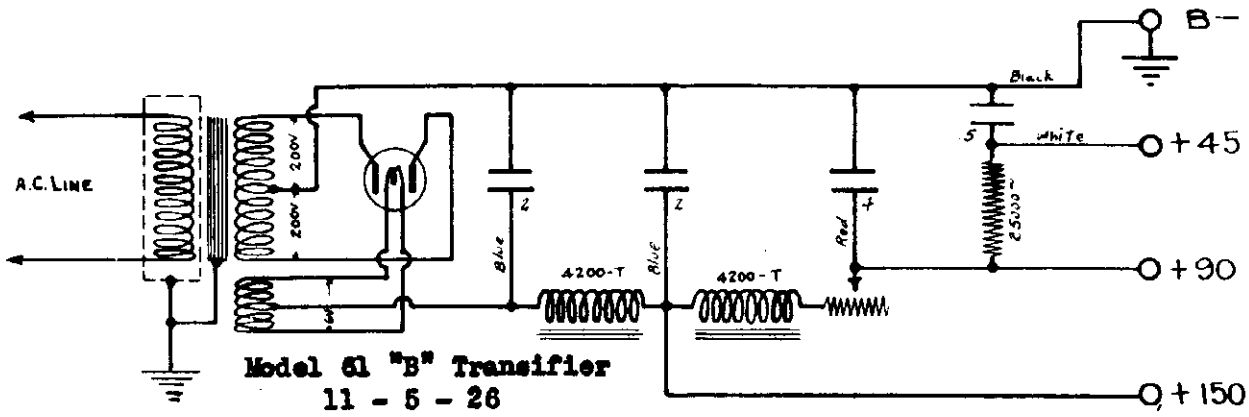

Model 61 "B" Transifier
11 - 5 - 26

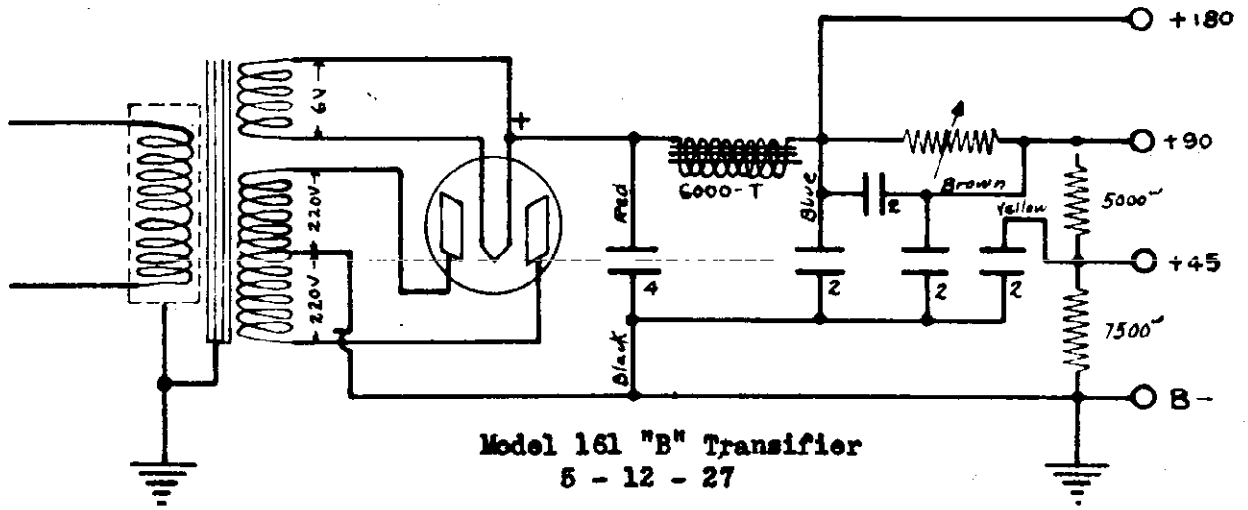

Model 161 "B" Transifier
5 - 12 - 27

©John F. Rider, Publisher

MODEL 101,Radiola Transifier
MODEL 103, A Transifier KODEL RADIO CORP.
MODEL 106, A & B Transifier
Schematics

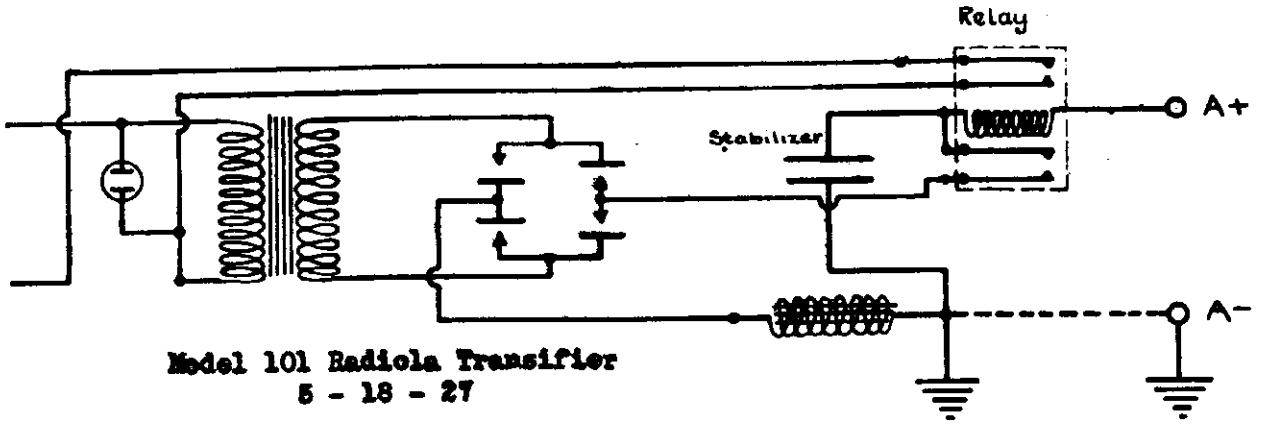

Model 101 Radiola Transifier
5 - 18 - 27

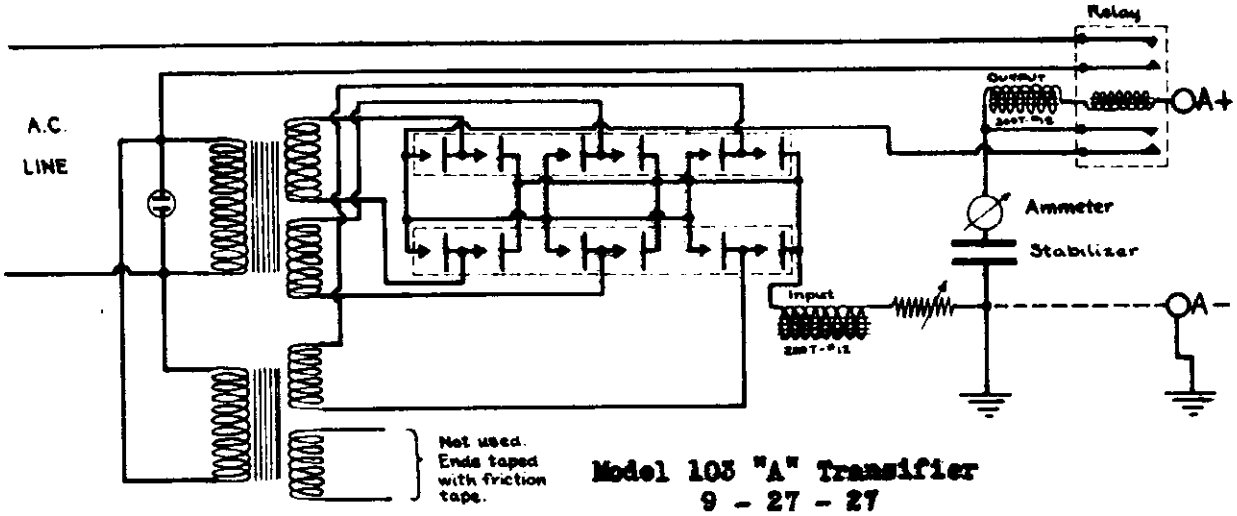

Model 103 "A" Transifier
9 - 27 - 27

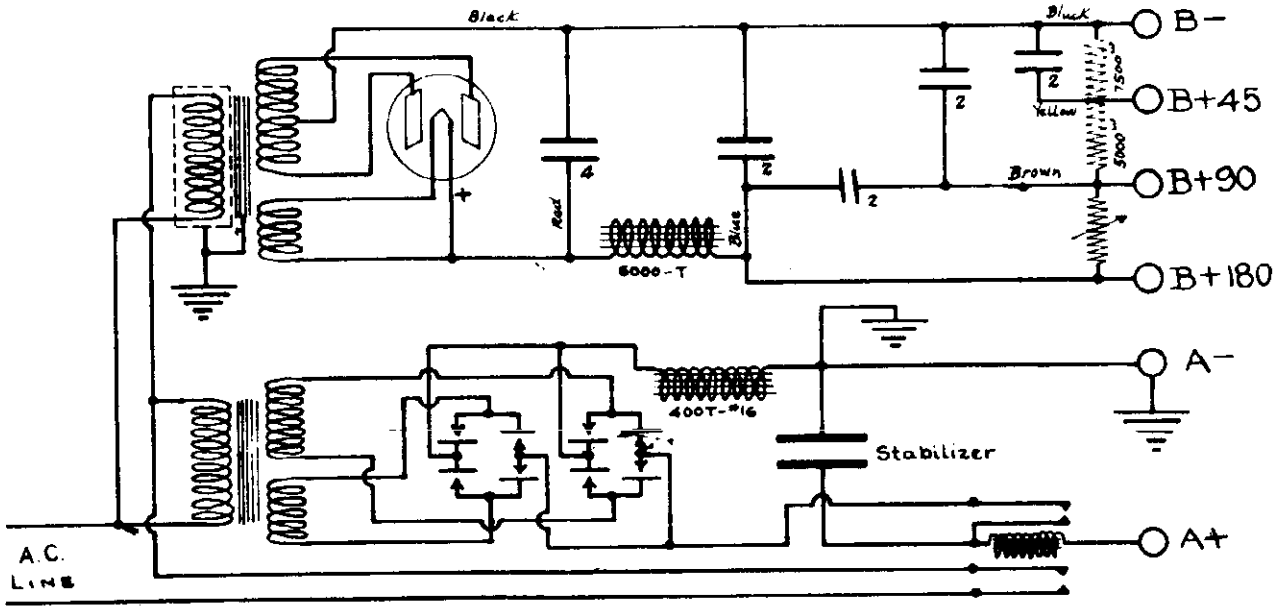

Model 106 Combination "A" and "B" Transifier
8 - 29 - 27

©John F. Rider, Publisher

LAFAYETTE RADIO MFG. CO.

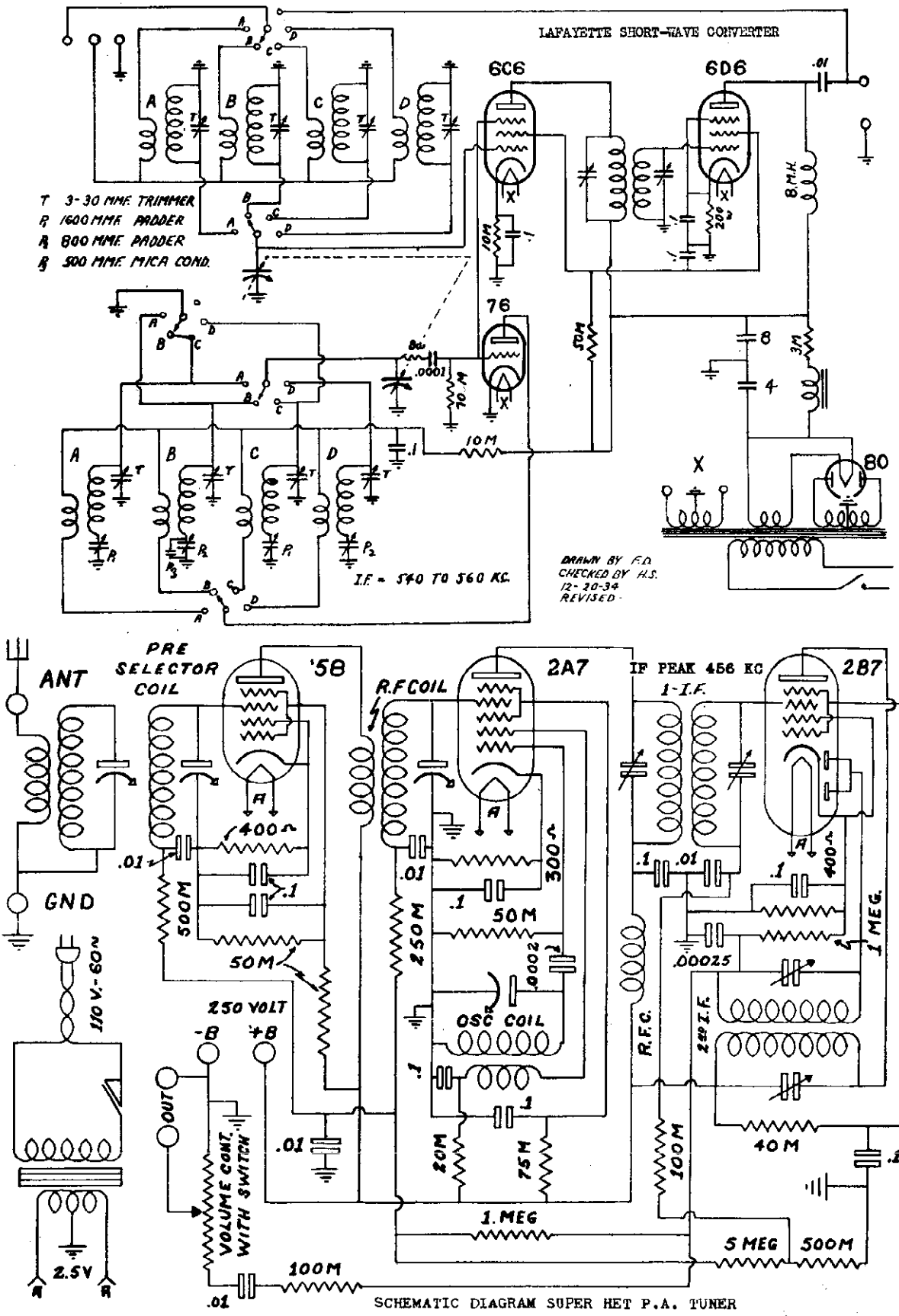

©John F. Rider, Publisher

MODEL 10-12
Schematic

LAFAYETTE RADIO MFG. CO.

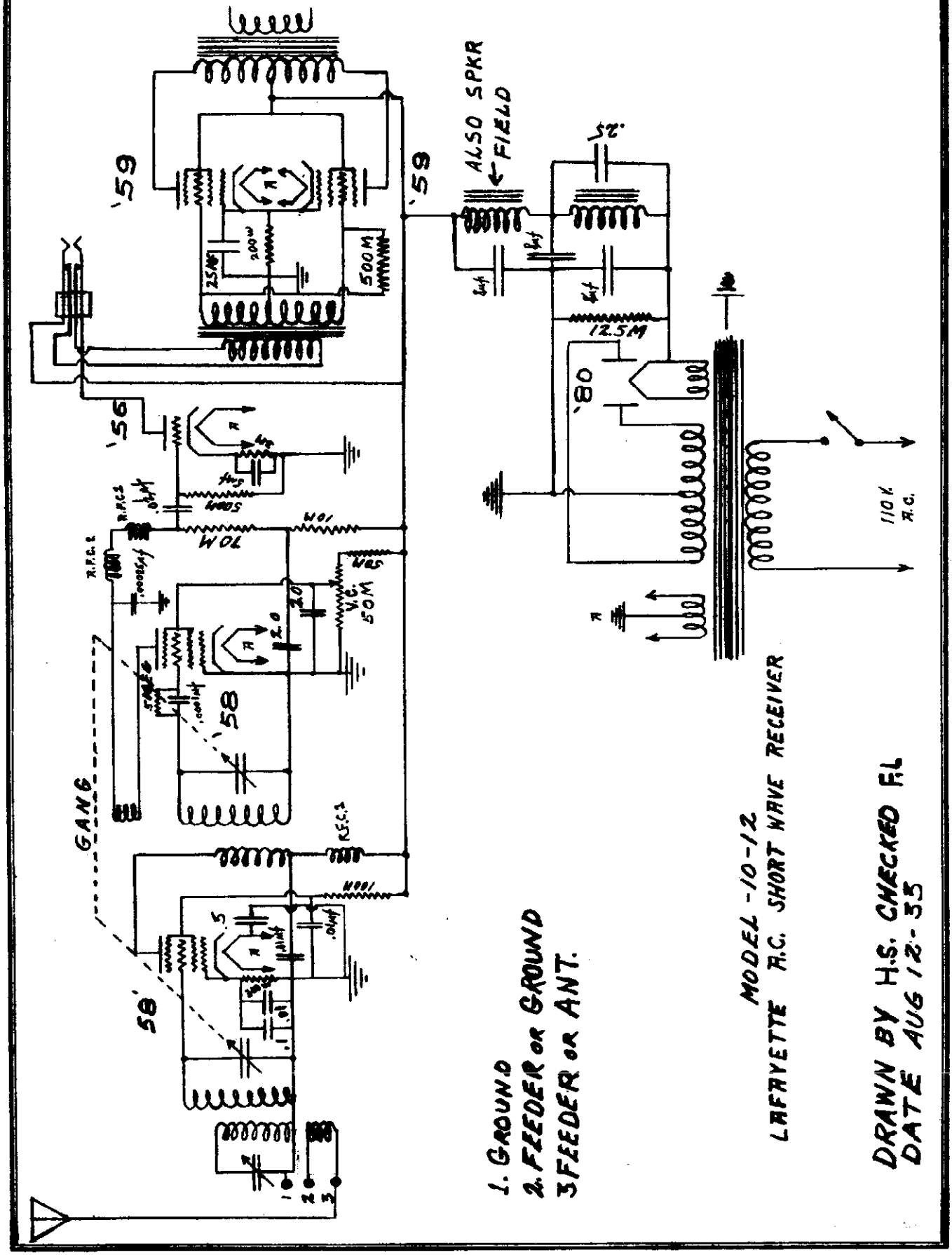

©John F. Rider, Publisher

MODEL E-20,E-2

Schematic

LAFAYETTE RADIO MFG. CO.

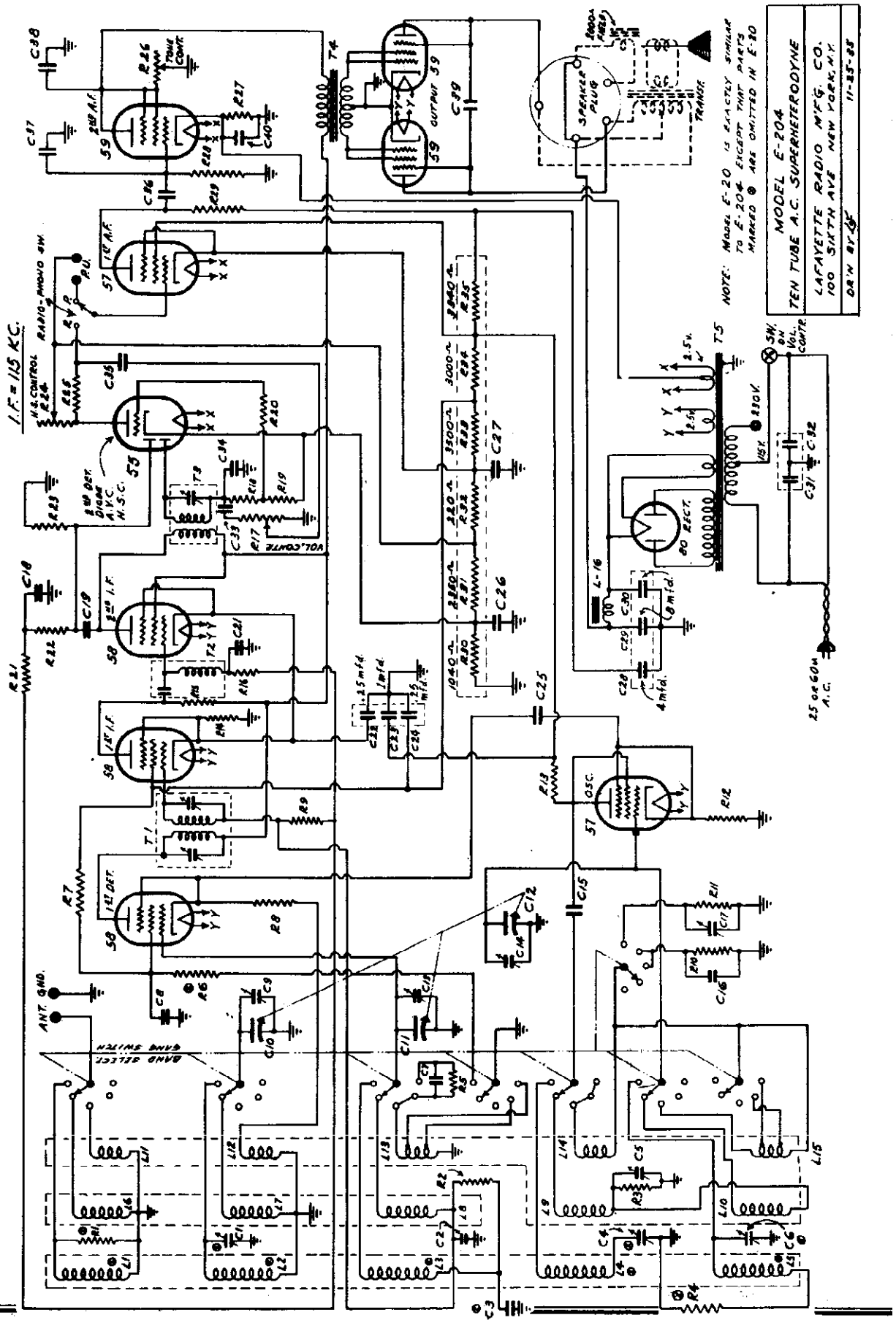

©John F. Rider, Publisher

MODEL E-20,E-204
Alignment,Voltage
Socket,Parts

LAFAYETTE RADIO MFG. CO.

SERVICE NOTES FOR THE MODELS E-20 & E-204
TEN TUBE ALL-WAVE SUPERHETERODYNE RECEIVERS

ALIGNMENT PROCEDURE

Realignment of this receiver should not be attempted unless all other possible causes of possible faulty operation have been thoroughly investigated. An accurately calibrated signal generator which will cover the necessary wave-bands and an output meter for indicating the effect of adjustments are required.

I.F. ADJUSTMENT - The signal generator is tuned to 115 kc. and is connected to the grid cap of the first detector (58) tube. The grid clip from the receiver is disconnected. The ground side of the generator is connected to the gnd. post of the receiver. The trimmers are adjusted by turning the screws up and down until maximum response is obtained in the output meter. Both the primary and secondary trimmers of the first i.f. transformer should be adjusted in this manner. The second i.f. transformer is an impedance coupled device and has no trimmers to adjust. The third i.f. transformer is aligned in the same manner as the first, except that the latter has only one trimmer. The first transformer is mounted in back of the short wave coil assembly. The third i.f. transformer is located between the 55 a.v.c. & n.s.c. tube and the 56 second detector. All i.f. trimmers are accessible from the top of the i.f. transformer shield cans.

1400 KC. ADJUSTMENT - The high side of the signal generator is connected to the antenna post of the receiver and the low side to the ground post. The receiver and the signal generator are both tuned to a frequency of 1400 kc. The oscillator trimmer condenser is adjusted for maximum receiver output, with the volume control on full and the signal generator adjusted for minimum input. The antenna preselector and first detector variable condenser trimmers are then adjusted in the order named. The variable condenser sections are, reading from front of the receiver to the rear, the antenna preselector, first detector, and oscillator.

600 KC. ADJUSTMENT - The receiver and signal generator are both tuned to 600 kc. and the 600 kc. padding condenser is adjusted for maximum output. This condenser is located on the left hand side of the chassis closest to the rear. The one toward the front of the chassis immediately adjacent to the 600 kc. padding condenser, is the 9.5 megacycle padding condenser. It may be necessary to rock the variable condenser slightly to the right and left in making this adjustment.

9.5 MEGACYCLE ADJUSTMENT - The band selector switch is adjusted for operation on band no. 1 and the receiver tuned to a point midway between 10 megacycles and the end of the dial. (approximately 9.5 meg.). The signal generator is set for a signal of 9.5 megacycles. The 9.5 megacycle trimmer, located alongside of the 600 kc. padding condenser, is now adjusted to bring in the signal at this dial setting. FAILURE TO HAVE THE CORRECT SIGNAL FREQUENCY OR AN IMPROPER SETTING OF THE RECEIVER DIAL WILL RESULT IN THE CALIBRATION OF THE DIAL BEING INACCURATE After the 9.5 megacycle padding condenser has been correctly adjusted, the band selector switch should be changed for operation on band no. 2, and the 9.5 megacycle signal should come in at approximately 9.5 megacycles on the dial's calibrated section. If the signal is received too far from the correct dial position it will be necessary to recheck the 9.5 megacycle padding condenser. (NOTE:- The cause may be due to improper adjustment of the signal generator frequency.).

140 KC. ADJUSTMENT - This adjustment can only be made on the Model E-204 when it is necessary to align the no. 5 band (140 to 370 kc.). The signal generator is tuned to a frequency of 140 kc. With the band selector switch adjusted for operation on band no. 5, and the receiver dial set at 140 kc., the 140 kc. padding condenser is adjusted for maximum response on the output meter. This padding condenser is located on the front of the chassis pan below the tuning dial and is accessible through the small hole in the chassis pan. The signal generator is then set at 350 kc. and the receiver dial set at this same frequency. The chassis is turned on end and the signal tuned in by adjusting the trimmer condenser, which is mounted on the back section of the selector switch. After peaking with this trimmer condenser, a further fine adjustment may be had by adjusting the oblong shaped trimmer mounted between the first and second sections of the wave selector switch. After these two trimmers have been correctly adjusted, the 140 kc. adjustment should be rechecked as the alignment of the latter is affected slightly by the adjustment of the former.

VOLTAGE TABLE

TUBE	FUNCTION	H'T'R	PLATE	SCREEN	SUPPR.	CATH.	GR.#2	GR.#3
58	1st det.	2.4	220	20	1.2	1.2		
57	oscill.	2.4	65	65	2.2	2.2		
58	1st. i.f.	2.4	120	95	4.4	4.4		
58	2nd i.f.	2.4	220	95	4.4	4.4		
55	2nd det. a.v.c.&n.s.c.	2.4	50			16		
57	1st aud.	2.4	175	145	50	50		
59	2nd aud.	2.4	200			18	200	200
59	output	2.4	340					340
59	output	2.4	340					340
80	rectifier	5.0						

Line Voltage - 115 volts a.c.
Volume Control - Full On
S. S. C. - Minimum Suppression
Wave Band - Broadcast

PARTS LIST

NOTE:- On Model E-20 the following parts are omitted:- R1, R6, C1, C3, C4, C6, and L1, 2, 3, 4, 5.

R1	25,000 Ohms	1/3 Watt res.	8907	.19
R2,9,16,19, 21,22,23,28	500,000 Ohms	1/3 Watt res.	6984	.19
R3,10,11	6000 Ohms	1/3 Watt res.	6880	.19
R4,	15,000 Ohms	1/3 Watt res.	9385	.19

PARTS LIST

R5	50,000 Ohms		6879	.19
R6	100,000 Ohms	1/3 watt res.	8000	.19
R7, 13	10,000 Ohms	1 watt res.	6979	.22
R8	2,000 Ohms	1/3 watt res.	7997	.19
R12	250 Ohms	1/3 watt res.	6875	.19
R14	500 Ohms		9085	
R15,29	25,000 Ohms	1.2 watt res.	9346	.22
R17	Vol. contr. (with sw.)		9296	1.43
R18	250,000 Ohms	1/3 watt res.	8906	.19
R20,25	1 megohm	1/3 watt res.	7998	.19
R24	N.S.C. tube contr.		9297	.96
R26	Tone control		9295	.88
R27	1,000 Ohms	1 watt res.	6127	
R30,31,32,33,34,35	Res. strip		9199	.94
C1	Aligning cond.(3 to 12 mmfd.)		9805	.17
C2	0.01 mfd. 400 v.		7860	.17
C3,8,18,21	0.1 mfd. 200 v.		9386	.19
C4,5	Padding condenser550-1000 mmfd.		8927	.50
C6	Aligning condenser 15-40 mmfd.		9383	.28
C7	.0005 mfd. mica condenser		8850	.14
C10,11,12	3 Gang tuning cond.		9876	4.13
C15,16	.005 mfd.	mica cond.	9302	.14
C17		300-600 mmfd.	9882	
C19,37	.001 mfd.	400 V.	7851	.17
C22,23,24	.25-1.0-.25 mfd.		7843	1.27
C25,33,35,38	.01 mfd.		7860	.17
C26	25.0 mfd. electrol.25 v.d.c.		9196	.94
C27	8 mfd. electrol. 100 v.		9197	1.10
C28,29,30	4-8-8 mfd. electrol.		9193	3.52
C31,32	.1-.1 mfd.	400 v. d.c.	9195	.66
C34	.0005	mica condenser	8830	.14
C39	.004 mfd.	400 v.	7852	.17
C40	4 mfd. electrol. 50 v. d.c.		8876	.17
T1	osc. & i.f. coil assembly		9277	5.45
T2	i.f. & imped. coupled unit		9268	1.29
T3	i.f. transf. assembly		9267	1.62
T4	audio transf.		9192	1.98
T5	power transf.(115 v. 50-60 cycles)		9270	6.33
	or universal power tr.(115-230 v.25-50 cycles)		9266	9.63
L1,2,3,4,5	140-370 kc. coil assembly.		9301	2.64
L6,7,8	540-1500 kc. coil assembly		9269	1.35
L9,10	540-1500 kc. coil assembly)		9281	4.70
L11,13,14,15	1.5 24.5 mc. coil assembly)			
L12	image bucking coil			
L16	filter choke		9179	1.76
	wave sw. for model E-204		9298	4.12
	wave sw. for model E-20		9279	3.85
	tuning dial compl.		9275	4.46
	pilot light bracket		9304	.08

PRICES SUBJECT TO CHANGE WITHOUT NOTICE

PHONOGRAPH OPERATION

On the back of the chassis adjacint to the ant-gnd posts, are located the phonograph jacks into which the two tips of the phonograph pickup are to be inserted. It is necessary that the pickup be equipped with a volume control of its own. The toggle switch located just below the tip jacks, must be snapped in the position marked "p" for phonograph operation and to the position marked "r" for radio operation.

SHORT WAVE TRIMMER

The short wave trimmer is used for a fine tuning adjustment when short wave reception between 1.5 and 24 mc. is desired. It is inoperative when the receiver is operating on the broadcast band.

FREQUENCY BANDS

The model E-204 is designed for the following five frequency bands:

Band #1	24 to 9.8 mc.
Band #2	9.8 to 3.8 mc.
Band #3	3.8 to 1.5 mc.
Band #4	1500 to 550 kc.
Band #5	350 to 130 kc.

Model E-20 is designed for the first four bands listed above only. Band #1 may be selected by placing the wave selector switch in the maximum left hand position. The other bands follow in rotation, as the knob is turned to the right.

FRONT PANEL

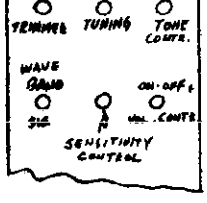

TOP VIEW OF CHASSIS

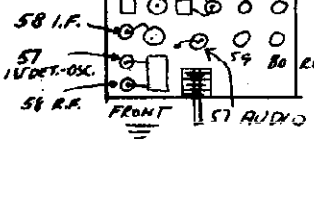

©John F. Rider, Publisher

MODEL E-20,E-204
Alignment,Voltage
Socket,Parts

LAFAYETTE RADIO MFG. CO.

SERVICE NOTES FOR THE MODELS E-20 & E-204
TEN TUBE ALL-WAVE SUPERHETERODYNE RECEIVERS

ALIGNMENT PROCEDURE

Realignment of this receiver should not be attempted unless all other possible causes of possible faulty operation have been thoroughly investigated. An accurately calibrated signal generator which will cover the necessary wave-bands and an output meter for indicating the effect of adjustments are required.

I.F. ADJUSTMENT - The signal generator is tuned to 115 kc. and is connected to the grid cap of the first detector (58) tube. The grid clip from the receiver is disconnected. The ground side of the generator is connected to the gnd. post of the receiver. The trimmers are adjusted by turning the screws up and down until maximum response is obtained in the output meter. Both the primary and secondary trimmers of the first i.f. transformer should be adjusted in this manner. The second i.f. transformer is an impedance coupled device and has no trimmers to adjust. The third i.f. transformer is aligned in the same manner as the first, except that the latter has only one trimmer. The first transformer is mounted in back of the short wave coil assembly. The third i.f. transformer is located between the 55 a.v.c. & n.s.c. tube and the 58 second detector. All i.f. trimmers are accessible from the top of the i.f. transformer shield cans.

1400 KC. ADJUSTMENT - The high side of the signal generator is connected to the antenna post of the receiver and the low side to the ground post. The receiver and the signal generator are both tuned to a frequency of 1400 kc. The oscillator trimmer condenser is adjusted for maximum receiver output, with the volume control on full and the signal generator adjusted for minimum input. The antenna preselector and first detector variable condenser trimmers are then adjusted in the order named. The variable condenser sections are, reading from front of the receiver to the rear, the antenna preselector, first detector, and oscillator.

600 KC. ADJUSTMENT - The receiver and signal generator are both tuned to 600 kc. and the 600 kc. padding condenser is adjusted for maximum output. This condenser is located on the left hand side of the chassis closest to the rear. The one toward the front of the chassis immediately adjacent to the 600 kc. padding condenser, is the 9.5 megacycle padding condenser. It may be necessary to rock the variable condenser slightly to the right and left in making this adjustment.

9.5 MEGACYCLE ADJUSTMENT - The band selector switch is adjusted for operation on band no. 1 and the receiver tuned to a point midway between 10 megacycles and the end of the dial. (approximately 9.5 meg.). The signal generator is set for a signal of 9.5 megacycles. The 9.5 megacycle trimmer, located alongside of the 600 kc. padding condenser, is now adjusted to bring in the signal at this dial setting. FAILURE TO HAVE THE CORRECT SIGNAL FREQUENCY OR AN IMPROPER SETTING OF THE RECEIVER DIAL WILL RESULT IN THE CALIBRATION OF THE DIAL BEING INACCURATE After the 9.5 megacycle padding condenser has been correctly adjusted, the band selector switch should be changed for operation on band no. 2, and the 9.5 megacycle signal should come in at approximately 9.5 megacycles on the dial's calibrated section. If the signal is received too far from the correct dial position it will be necessary to recheck the 9.5 megacycle padding condenser. (NOTE:- The cause may be due to improper adjustment of the signal generator frequency.).

140 KC. ADJUSTMENT - This adjustment can only be made on the Model E-204 when it is necessary to align the no. 5 band (140 to 370 kc.). The signal generator is tuned to a frequency of 140 kc. With the band selector switch adjusted for operation on band no. 5, and the receiver dial set at 140 kc., the 140 kc. padding condenser is adjusted for maximum response on the output meter. This padding condenser is located on the front of the chassis pan below the tuning dial and is accessible through the small hole in the chassis pan. The signal generator is then set at 350 kc. and the receiver dial set at this same frequency. The chassis is turned on end and the signal tuned in by adjusting the trimmer condenser, which is mounted on the back section of the selector switch. After peaking with this trimmer condenser, a further fine adjustment may be had by adjusting the oblong shaped trimmer mounted between the first and second sections of the wave selector switch. After these two trimmers have been correctly adjusted, the 140 kc. adjustment should be rechecked as the alignment of the latter is affected slightly by the adjustment of the former.

VOLTAGE TABLE

TUBE	FUNCTION	H'T'R	PLATE	SCREEN	SUPPR.	CATH.	GR.#2	GR#1
58	1st det.	2.4	220	20	1.2	1.2		
57	oscill.	2.4	65	65	2.2	2.2		
58	1st. i.f.	2.4	120	95	4.4	4.4		
58	2nd i.f.	2.4	220	95	4.4	4.4		
55	2nd det. a.v.c.&n.s.c.	2.4	50			16		
57	1st aud.	2.4	175	145	50	50		
59	2nd aud.	2.4	200			16	200	200
59	output	2.4	340					340
59	output	2.4	340					340
80	rectifier	5.0						

Line Voltage - 115 volts a.c.
Volume Control - Full On
S. S. O. - Minimum Suppression
Wave Band - Broadcast

PARTS LIST

NOTE: - On Model E-20 the following parts are omitted:- R1, R6, C1, C3, C4, C6, and L1, 2, 3, 4, 5.

R1	25,000 Ohms	1/3 Watt res.	8907	.19
R2,9,16,19, 21,22,23,26	500,000 Ohms	1/3 Watt res.	6984	.19
R3,10,11	5000 Ohms	1/3 Watt res.	6880	.19
R4,	15,000 Ohms	1/3 Watt res.	9385	.19
R5	50,000 Ohms		6879	.19
R6	100,000 Ohms	1/3 watt res.	8000	.19
R7, 13	10,000 Ohms	1 watt res.	6979	.22
R8	2,000 Ohms	1/3 watt res.	7997	.19
R12	250 Ohms	1/3 watt res.	6875	.19
R14	500 Ohms		9089	
R15,29	25,000 Ohms	1.2 watt res.	9346	.22
R17	Vol. contr. (with sw.)		9296	1.43
R18	250,000 Ohms	1/3 watt res.	8906	.19
R20,25	1 megohm	1/3 watt res.	7998	.19
R24	N.S.O. tube contr.		9297	.98
R26	Tone control		9295	.88
R27	1,000 Ohms	1 watt res.	6127	
R30,31,32,33,34,35	Res. strip		9199	.94
C1	Aligning cond.(3 to 12 mmfd.)		9805	.17
C2	0.01 mfd. 400 v.		7860	.17
C3,8,18,21	0.1 mfd. 200 v.		9386	.19
C4,5	Padding condenser 550-1000 mmfd.		8927	.50
C6	Aligning condenser 15-40 mmfd.		9383	.28
C7	.0005 mfd. mica condenser		8830	.14
C10,11,12	3 Gang tuning cond.		9276	4.13
C15,16	.005 mfd. mica cond. 300-600 mmfd.		9302	.14
C17			9982	
C19,37	.001 mfd. 400 V.		7861	.17
C22,23,24	.25-1.0-.25 mfd.		7843	1.27
C25,33,35,38	.01 mfd.		7860	.17
C26	25.0 mfd. electrol.25 v.d.c.		9196	.94
C27	8 mfd. electrol. 100 v.		9197	1.10
C28,29,30	4-8-8 mfd. electrol.		9193	3.52
C31,32	.1-.1 mfd. 400 v. d.c.		9195	.66
C34	.0005 mica condenser		8830	.14
C39	.004 mfd. 400 v.		7862	.17
C40	4 mfd. electrol. 50 v. d.c.		8876	.17
T1	osc. & i.f. coil assembly		9277	5.45
T2	i.f. & imped. coupled unit		9268	1.39
T3	i.f. transf. assembly		9267	1.62
T4	audio transf.		9192	1.98
T5	power transf.(115 v. 50-60 cycles)		9270	6.33
or universal	power tr.(115-230 v.25-50 cycles)		9266	9.63
L1,2,3,4,5	140-370 kc. coil assembly.		9301	2.64
L6,7,8	540-1500 kc. coil assembly		9269	1.35
L9,10	540-1500 kc. coil assembly)		9281	4.70
L11,13,14,15	1.5 24.5 mc. coil assembly)			
L12	image bucking coil			
L16	filter choke		9179	1.76
	wave sw. for model E-204		9295	4.12
	wave sw. for model E-20		9279	3.85
	tuning dial compl.		9275	4.46
	pilot light bracket		9304	.08

PRICES SUBJECT TO CHANGE WITHOUT NOTICE

PHONOGRAPH OPERATION

On the back of the chassis adjacint to the ant-gnd posts, are located the phonograph jacks into which the two tips of the phonograph pickup are to be inserted. It is necessary that the pickup be equipped with a volume control of its own. The toggle switch located just below the tip jacks, must be snapped in the position marked "p" for phonograph operation and to the position marked "r" for radio operation.

SHORT WAVE TRIMMER

The short wave trimmer is used for a fine tuning adjustment when short wave reception between 1.5 and 24 mc. is desired. It is inoperative when the receiver is operating on the broadcast band.

FREQUENCY BANDS

The model E-204 is designed for the following five frequency bands:

Band #1	24 to 9.8 mc.
Band #2	9.8 to 3.8 mc.
Band #3	3.8 to 1.5 mc.
Band #4	1500 to 550 kc.
Band #5	350 to 130 kc.

Model E-20 is designed for the first four bands listed above only. Band #1 may be selected by placing the wave selector switch in the maximum left hand position. The other bands follow in rotation, as the knob is turned to the right.

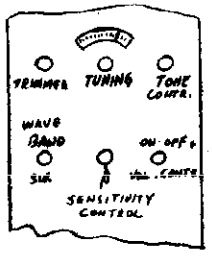

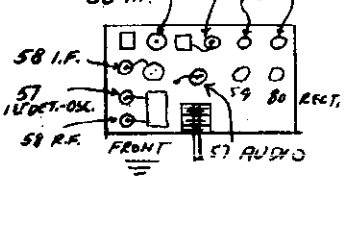

©John F. Rider, Publisher

MODELS C-79, C-8
Schematic

LAFAYETTE RADIO MFG. CO.

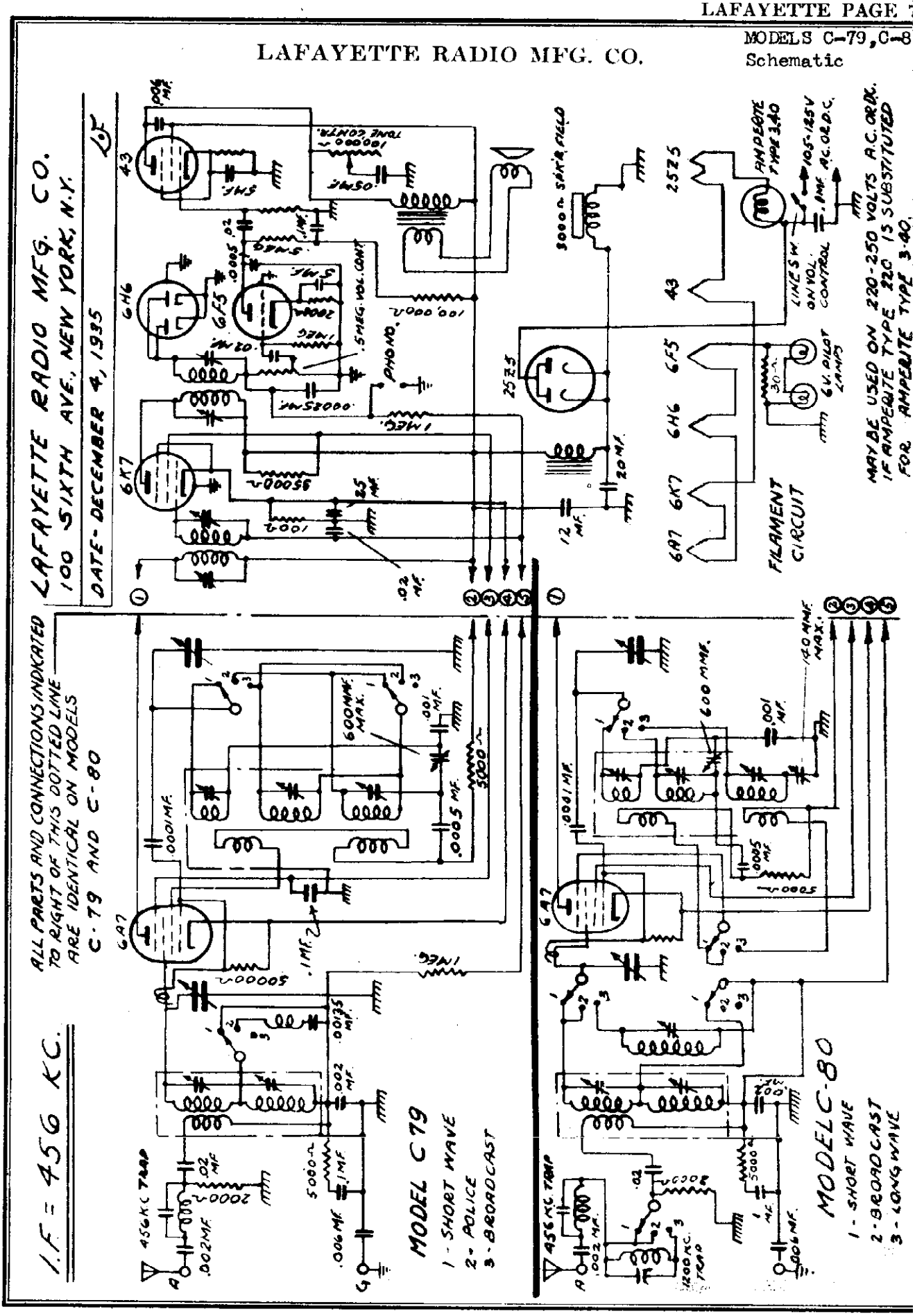

©John F. Rider, Publisher

©John F. Rider, Publisher

OPERATING INSTRUCTIONS FOR THE MODEL C-80
7 TUBE 3 BAND A.C.-D.C. SUPERHETERODYNE RECEIVER

POWER SUPPLY

This receiver is designed to operate on either direct or alternating current of any frequency on voltages between 105 and 130. If voltages in excess of this value are to be applied, a special voltage reducing resistor must be used. For operation on 220-250 volts, a type 220 amperite is substituted for the type 3-40 amperite.

When operating from direct current, the tubes should be allowed about three-quarters of a minute to heat up; if, at the end of this time, no reception is heard, the line plug should be reversed in the socket. Power consumption - 50 watts.

FREQUENCY BAND

The receiver operates on three frequency bands; either band may be selected by means of the selector switch which is located at the extreme right, on the front panel. This switch has three positions which are marked to correspond to the three frequency bands designated below. The dial is also calibrated with three separate scales for these three bands:

Band #1	short wave	5 to 16 mc.	60. to 18.75 meters
Band #2	broadcast	540 to 1540 kc.	555.5 to 194.8 meters
Band #3	long wave	140 to 326 kc.	2143 to 920.2 meters

FRONT PANEL VIEW

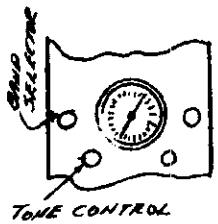

CHASSIS LAYOUT (TOP VIEW)

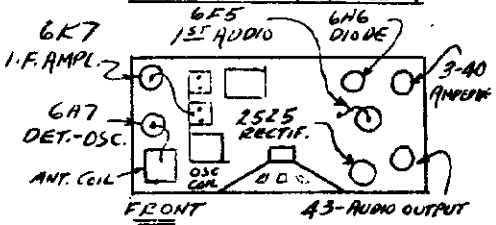

ALIGNMENT PROCEDURE

Realignment of this receiver should not be attempted unless all other possible causes of faulty operation have first been thoroughly investigated. An accurately calibrated signal generator which will cover the various wave-bands, and an output meter for indicating the effects of adjustments, are required.

MODEL C-80

I.F.ADJUSTMENT - The signal generator is set at 456 kc. The "hot" lead from the signal generator is connected to the grid cap on the 1st detector (6A7) tube, the clip having first been removed from the tube cap. The ground lead is connected to the receiver gnd. post. The oscillator section (front) of the gang tuning condenser is short-circuited and the volume control turned on full. The i.f. trimmers are then adjusted for maximum gain in the receiver. These trimmers are located on top of the i.f. transformer shield cans, which are situated in the rear of the chassis, to the left. The one nearest the front is the 1st i.f. transformer and the rear one is the 2nd i.f. transformer.

16 MEGACYCLE ADJUSTMENT - The short-circuit is removed from the oscillator condenser and the grid clip replaced in its normal position on the cap of the 6A7 tube. The "hot"lead from the signal generator is connected to the antenna post of the receiver and the ground lead to the ground post of the receiver. With the volume control set at maximum and a minimum input signal from the signal generator, the band switch is set at position no. 1 and the receiver dial set at 16 mc. The oscillator trimmer is adjusted for maximum gain at this setting. This trimmer is found on the side of the oscillator coil shield can which is located directly in front of the i.f. transformers. The upper trimmer is the one for this wave-band. After the oscillator is adjusted, the antenna trimmer is adjusted. This is found on the front of the antenna coil can which is directly in front of the 6A7 tube. The lower trimmer is the one for this band.

6 MEGACYCLE PADDER ADJUSTMENT - With all connections as above, the signal generator is set at 6 mc. and the signal tuned in on the dial. The padder for this frequency is found on the front sub-panel of the receiver, in the lower left hand corner. This padder should be adjusted for maximum response of the receiver, while the tuning condenser is rocked slightly back and forth. The 16 mc. adjustment should then be rechecked.

1400 KILOCYCLE ADJUSTMENT - With the receiver and signal generator both set at 1400 kc. the procedure outlined above is repeated. The trimmers are adjusted for maximum gain of the receiver. These trimmers are located on the coil shield cans; the oscillator trimmer for this band is the bottom one on the oscillator can; the detector trimmer, is the upper one on the detector or antenna coil can. The 600 kc.padder is on the front sub-panel, directly under the selector switch.

LONG WAVE ADJUSTMENT - With the receiver and signal generator both set at 325 kc. the procedure outlined above is repeated. The trimmers are located on the left side panel of the chassis; the one towards the rear is the oscillator trimmer, and the one near the front is the antenna trimmer. There is no series padder for this band.

MODEL C-79

The alignment procedure for the Model C-79 is exactly the same as for the model C-80 except for the location of the trimmers, and the designation of the bands. These are as follows:

Short wave band - Oscillator trimmer is the lower one on the osc.coil can.
Antenna trimmer is the upper one on the antenna coil can.
No series padder.

Broadcast band - Oscillator trimmer is the upper one on the antenna coil can.
Antenna trimmer is the lower one on the antenna coil can.
600 kc. series padder is on the lower left hand corner of the front sub-panel.

Police band -- Trimmers are on the left side panel of the chassis. The one towards the rear is the oscillator shunt trimmer; the one towards the front is the antenna shunt trimmer.

VOLTAGE TABLE

TUBE	FUNCTION	H'T'R	PLATE	SC.GR	CATH.	OSC.PL.
6A7	det.-osc.	4.5	100.2	47.0	---	90.0
6K7	i.f. ampl.	4.3	100.2	47.0	---	------
6H6	diode det.	4.5	--	--	---	------
6F5	1st audio	4.4	40.0	--	---	------
43	audio outp.	20.2	94.0	100.0	12.3	------
2525	rectifier	21.0	114.0	--	---	------

MODEL M-1
Schematic

LAFAYETTE RADIO MFG. CO.

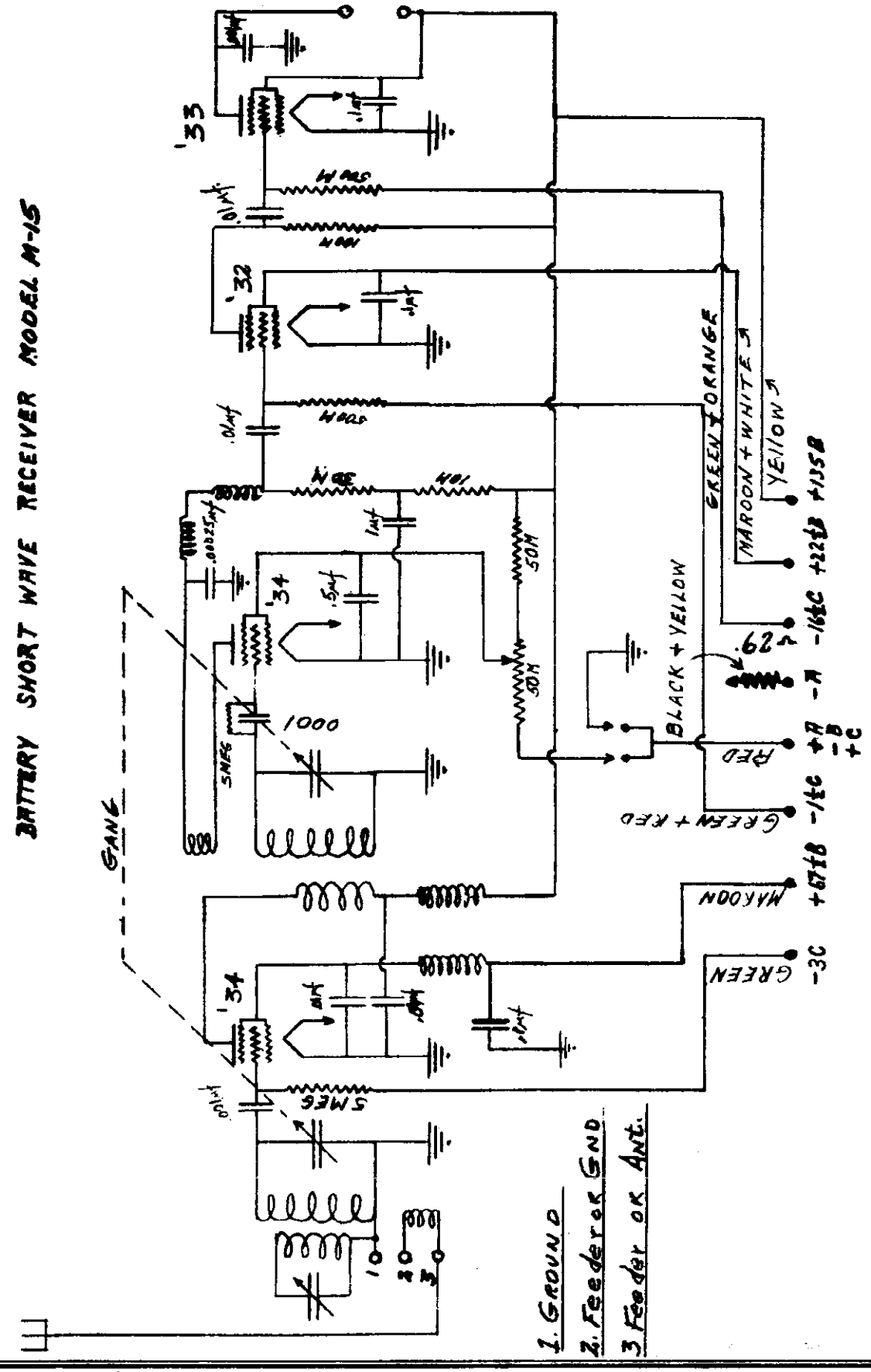

DRAWN BY ~ KOENIG
CHECKED BY ~ LESTER

©John F. Rider, Publisher

MODELS 132-A, 133-A
MODEL 135-A

LAFAYETTE RADIO MFG. CO.

Schematics

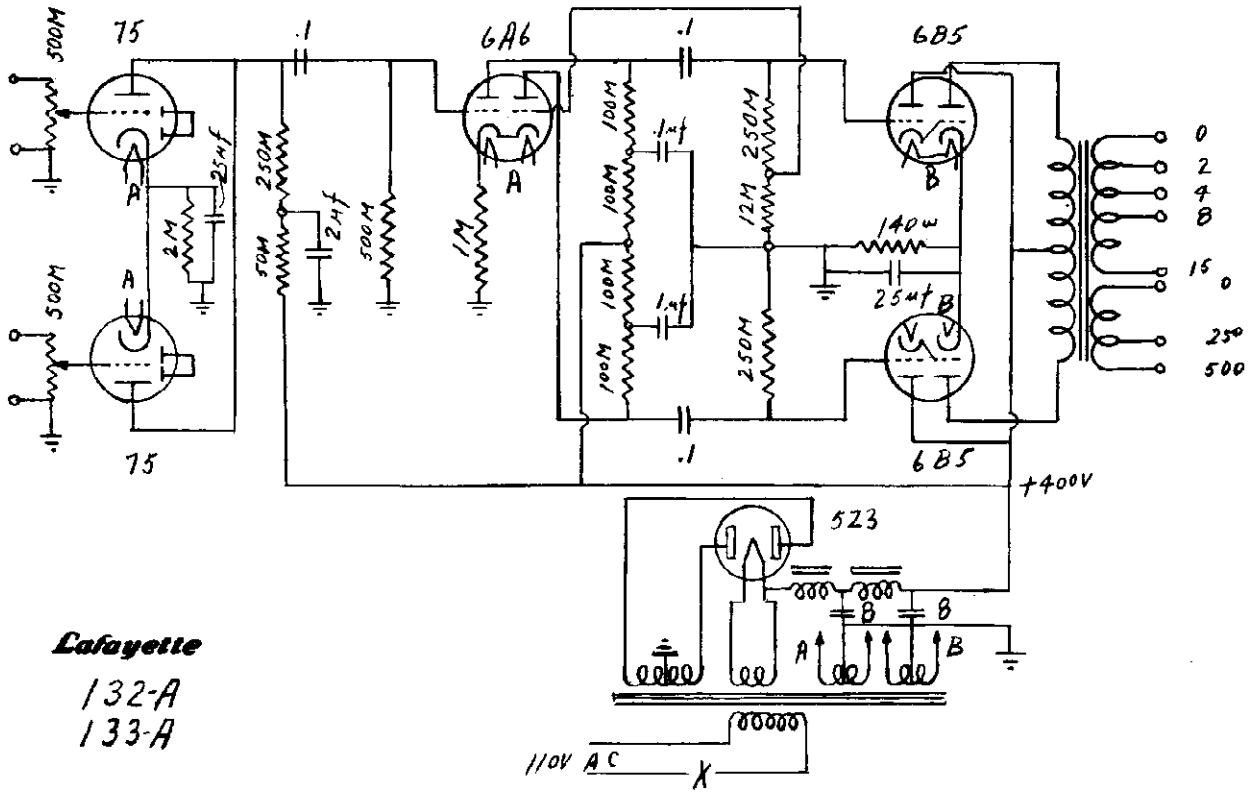

Lafayette
132-A
133-A

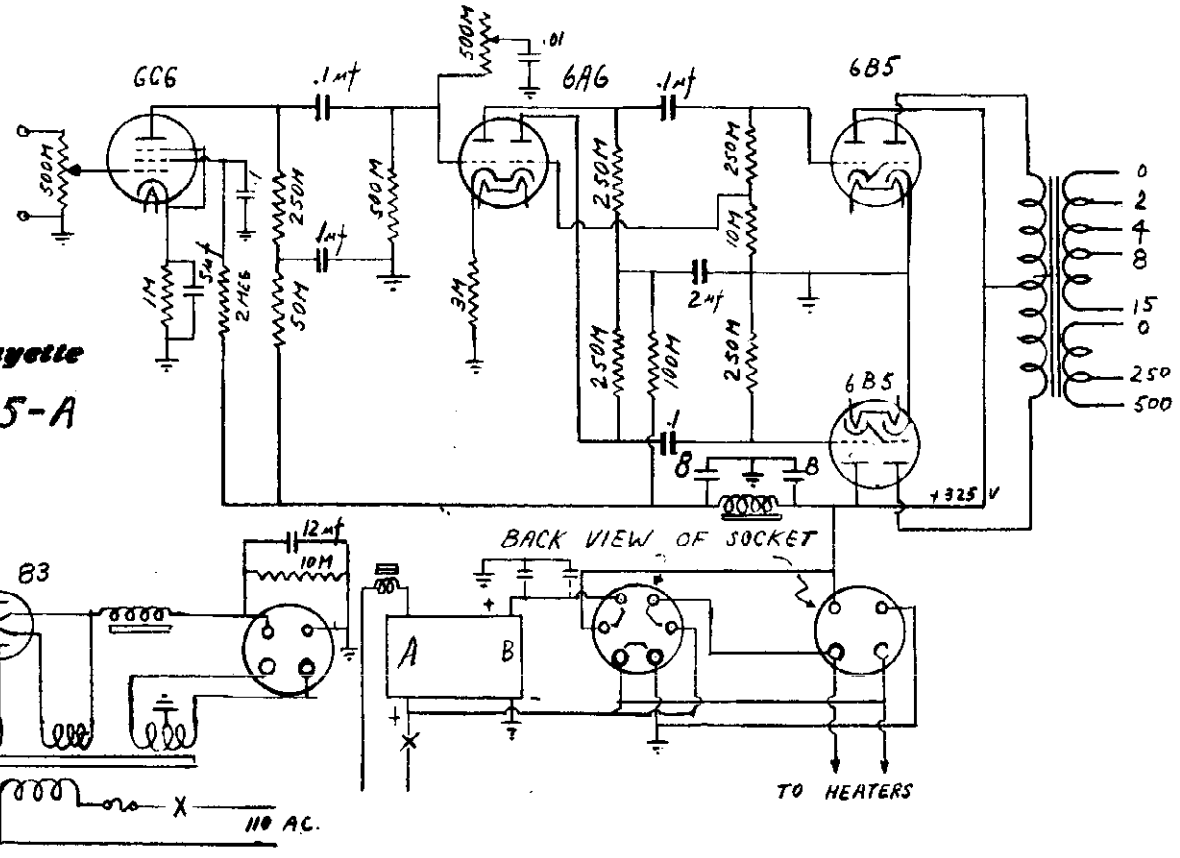

Lafayette
135-A

©John F. Rider, Publisher

LAFAYETTE RADIO MFG. CO.

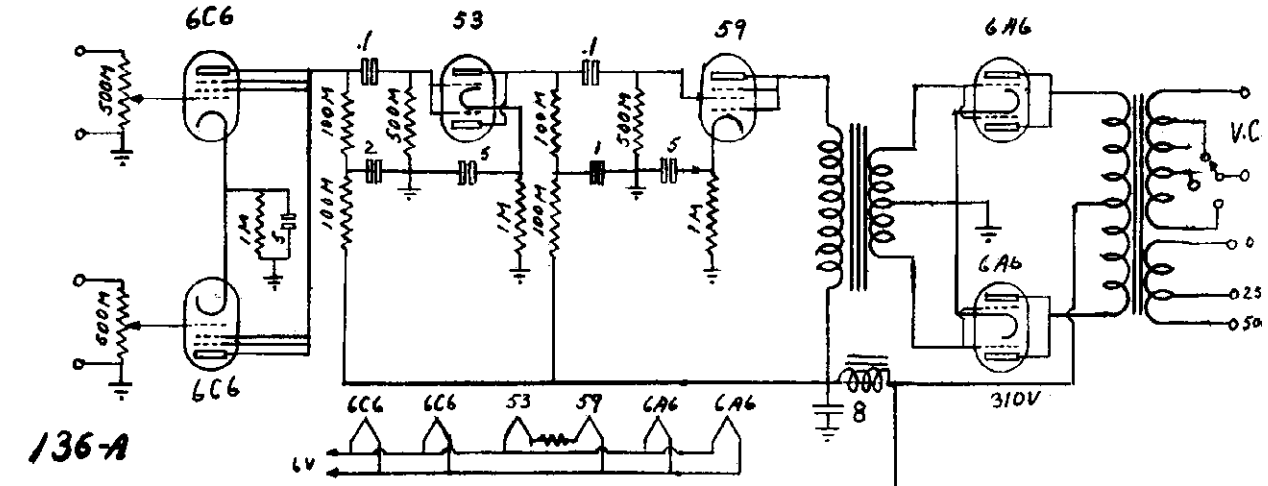

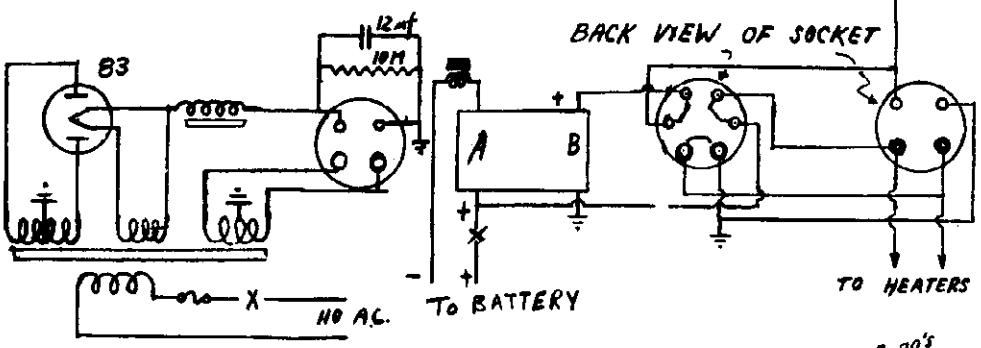

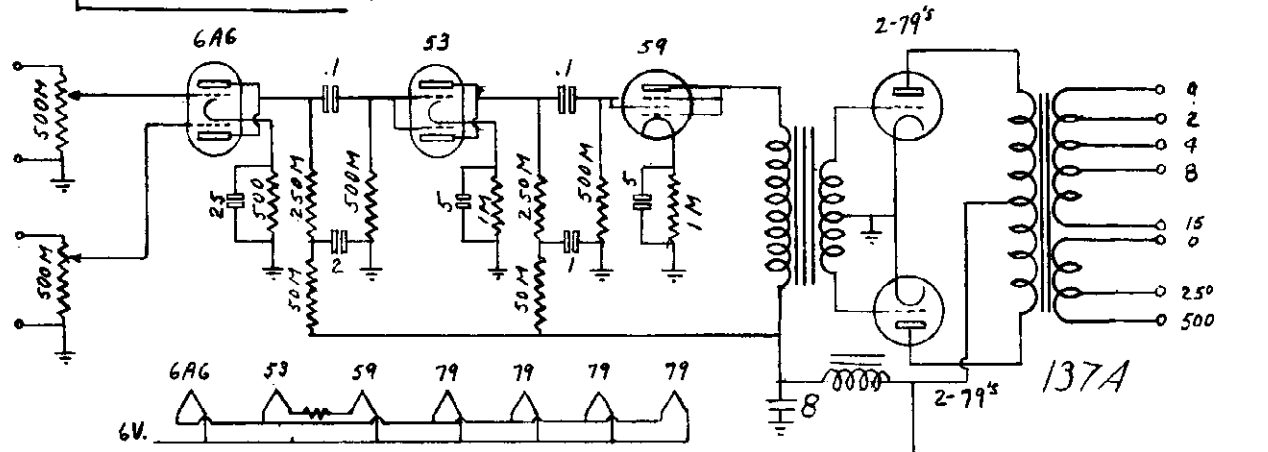

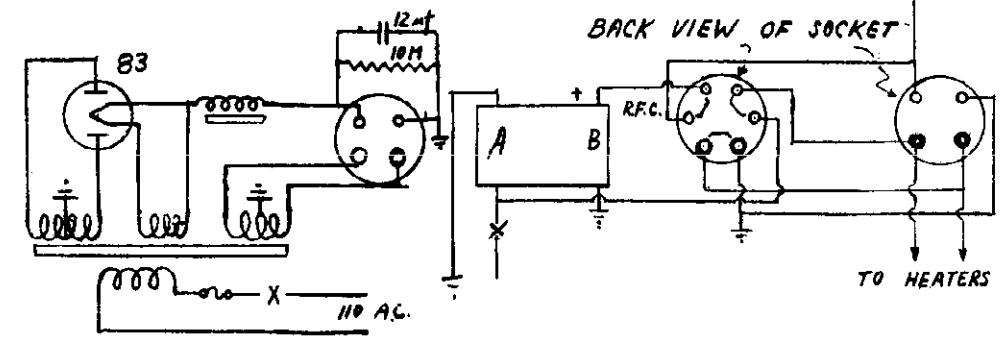

©John F. Rider, Publisher

MODELS 137-X, 150-X
171-X
Schematic, Alignment
Notes

LAFAYETTE RADIO MFG. CO.

SHORT WAVE BANDS

The foreign band of 19 to 49 meters can be adjusted by the two trimmers on the short wave coil located next to the gang condenser. Set the test oscillator to 10 megacycles or 31 meters.

The police and aviation band can be adjusted from a signal set at 3,000 K.C. or 500 on the Dial. The oscillator trimmer is located underneath the chassis set and the R.F. trimmer is between the 6A7 tube and the wave change switch.

The gang condenser trimmers are not to be used for alignment of either of the short wave bands.

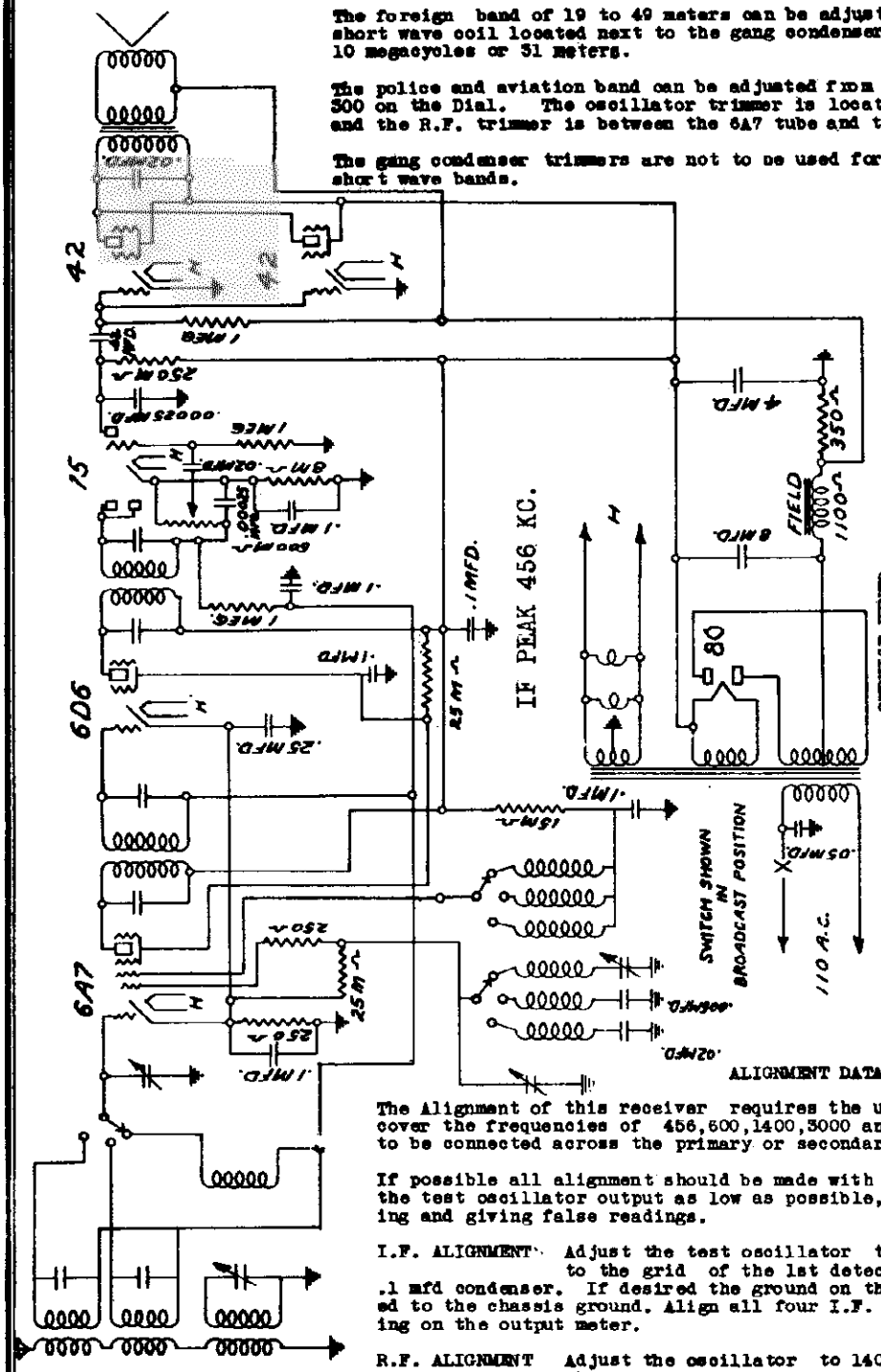

SERVICE HINTS

LOW VOLUME This may be caused by weak or defective tubes (Replace with set of tubes known to be in good condition), antenna disconnected from the receiver, open antenna coil, open or shorted by-pass condensers, or defective wave change switch.

LOW VOLTAGE Low voltage may be caused by a defective 80 rectifier, low line voltage, a defective power transformer or shorted by-pass condensers.

HUM Excessive hum may be caused by a defective 80 tube, open filter condenser, or open audio grid lead.

DISTORTED REPRODUCTIONS This may be caused by a defective 75 or 42 tube or a ground or open in the automatic volume control circuits. Check all circuits with an ohmmeter or continuity tester.

OSCILLATION Most trouble from oscillation is due to open by-pass or defective filter condenser. The grid lead on the 75 tube may also cause a howl if it runs too close to the 42 tube.

ALIGNMENT DATA

The Alignment of this receiver requires the use of a test oscillator that will cover the frequencies of 456,600,1400,3000 and 10,000 K.C. and an output meter to be connected across the primary or secondary of the output transformers.

If possible all alignment should be made with the volume control on maximum and the test oscillator output as low as possible, to prevent the AVC from operating and giving false readings.

I.F. ALIGNMENT Adjust the test oscillator to 456 K.C. and connect the output to the grid of the 1st detector tube (6A7) through an .05 or .1 mfd condenser. If desired the ground on the test oscillator can be connected to the chassis ground. Align all four I.F. trimmers to peak or maximum reading on the output meter.

R.F. ALIGNMENT Adjust the oscillator to 1400 K.C. and connect the output to the antenna post through a .0001 mfd. mica condenser to give the equivalent of an antenna about 60 feet. Set the receiver pointer to 1400 K.C. and adjust the rear gang condenser trimmer to peak.

SCHEMATIC DIAGRAM OF MODEL - 137X-150X-171X

Next rest the dial pointer on the receiver and the test oscillator to 600 K.C. Slowly increase or decrease the oscillator padding condenser, and at the same time continuously tuning back and forth across the signal with the receiver until the maximum reading is obtained on the output meter. This adjustment seems a little complicated but is the easiest way to adjust the oscillator to the preselector or R.F. section. The padding condenser is located on the left hand end of the chassis.

Return to 1400 K.C. and again go over the adjustments at that frequency to be sure they have not been thrown out of adjustment.

©John F. Rider, Publisher

LAFAYETTE RADIO MFG. CO.

MODELS 143,144,149
Schematic, Alignment Notes

ALIGNMENT DATA

The Alignment of this receiver requires the use of a test oscillator that will cover the frequencies of 456,600,1400,3000 and 10,000 K.C. and an output meter to be connected across the primary or secondary of the output transformers.

If possible all alignment should be made with the volume control on maximum and the test oscillator output as low as possible, to prevent the AVC from operating and giving false readings.

I.F. ALIGNMENT Adjust the test oscillator to 456 K.C. and connect the output to the grid of the 1st detector tube (6A7) through an .05 or .1 mfd condenser. If desired the ground on the test oscillator can be connected to the chassis ground. Align all four I.F. trimmers to peak or maximum reading on the output meter.

R.F. ALIGNMENT Adjust the oscillator to 1400 K.C. and connect the output to the antenna post through a .0001 mfd. mica condenser to give the equivalent of an antenna about 60 feet. Set the receiver pointer to 1400 K.C. and adjust the rear gang condenser trimmer to peak.

Next rest the dial pointer on the receiver and the test oscillator to 600 K.C. Slowly increase or decrease the oscillator padding condenser, and at the same time continuously tuning back and forth across the signal with the receiver until the maximum reading is obtained on the output meter. This adjustment seems a little complicated but is the easiest way to adjust the oscillator to the preselector or R.F. section. The padding condenser is located on the left hand end of the chassis.

Return to 1400 K.C. and again go over the adjustments at that frequency to be sure they have not been thrown out of adjustment.

SHORT WAVE BANDS

The foreign band of 19 to 49 meters can be adjusted by the two trimmers on the short wave coil located next to the gang condenser. Set the test oscillator to 10 megacycles or 31 meters.

The police and aviation band can be adjusted from a signal set at 3,000 K.C. or 500 on the Dial. The oscillator trimmer is located underneath the chassis set and the R.F. trimmer is between the 6A7 tube and the wave change switch.

The gang condenser trimmers are not to be used for alignment of either of the short wave bands.

SERVICE HINTS

LOW VOLUME This may be caused by weak or defective tubes (Replace with set of tubes known to be in good condition), antenna disconnected from the receiver, open antenna coil, open or shorted by-pass condensers, or defective wave change switch.

LOW VOLTAGE Low voltage may be caused by a defective 80 rectifier, low line voltage, a defective power transformer or shorted by-pass condensers.

HUM Excessive hum may be caused by a defective 80 tube, open filter condenser, or open audio grid lead.

DISTORTED REPRODUCTIONS This may be caused by a defective 75 or 42 tube or a ground or open in the automatic volume control circuits. Check all circuits with an ohmmeter or continuity tester.

OSCILLATION Most trouble from oscillation is due to open by-pass or defective filter condenser. The grid lead on the 75 tube may also cause a howl if it runs too close to the 42 tube.

MODELS 151,154,
186,188
Chassis Layout

LAFAYETTE RADIO MFG. CO.

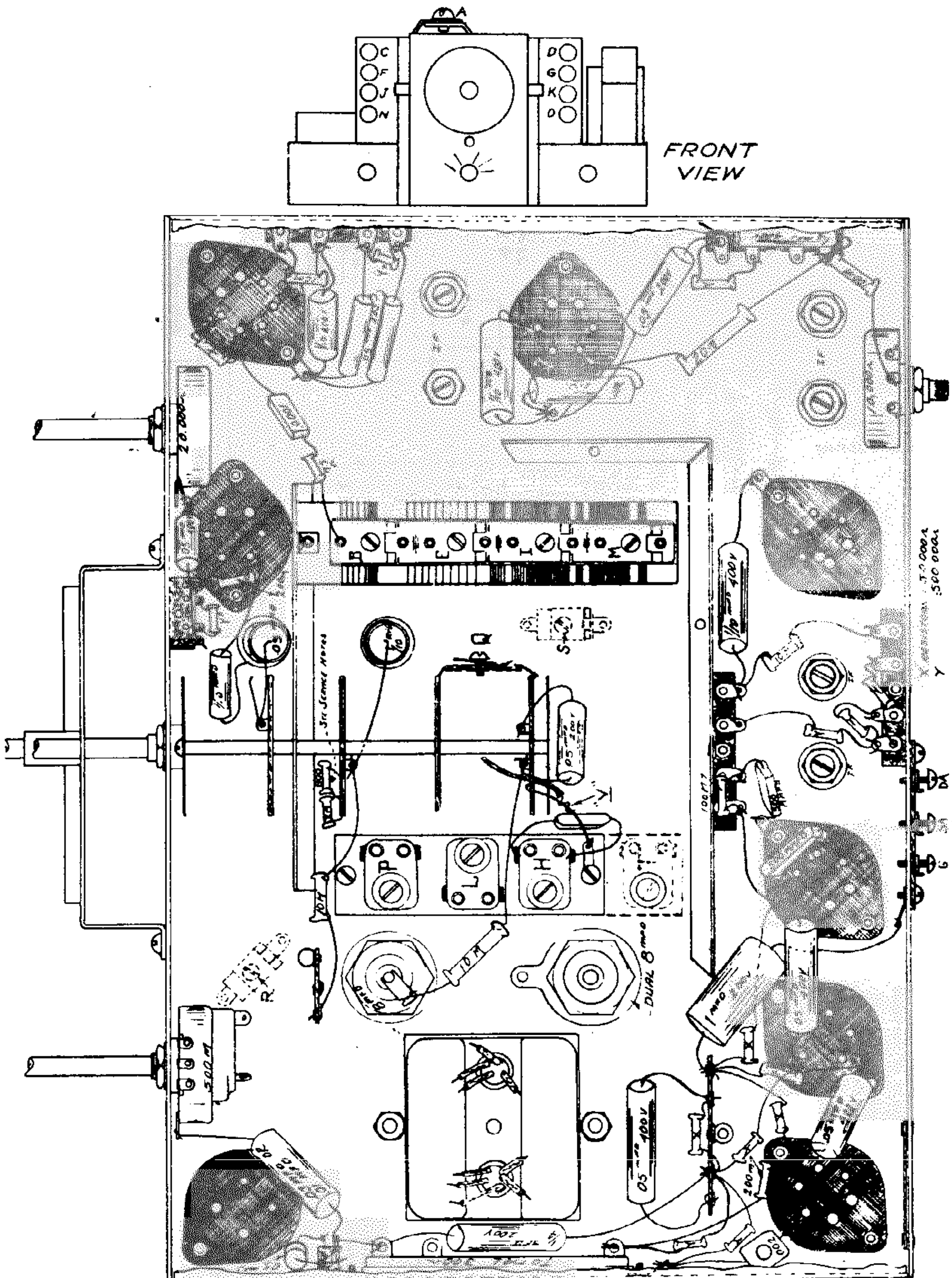

©John F. Rider, Publisher

MODELS 151,154,186,188

LAFAYETTE RADIO MFG. CO.

Schematic, Voltage

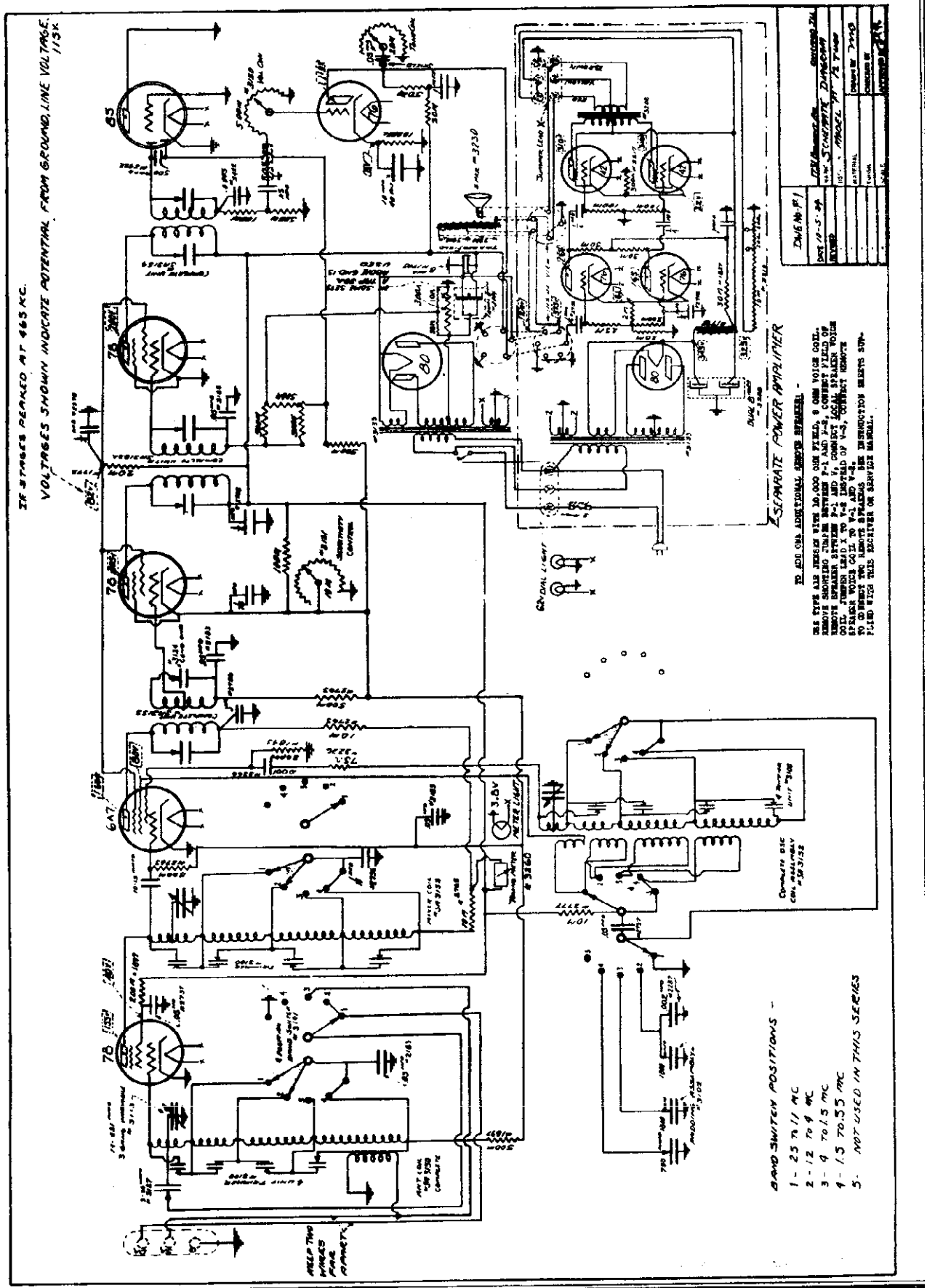

©John F. Rider, Publisher

MODELS 151,154
186,188
Alignment

LAFAYETTE RADIO MFG. CO.

THE PROCEDURE TO ALIGN THE I.F. STAGES

The IF's are aligned in the usual system of feeding the intermediate frequency of 465 KC into the grid of the 6A7 1st Detector tube.

Make certain that the sensitivity adjustment (which is the knurled shaft extending from the back of the chassis) is turned all the way to the right when gaining the IF, RF or Oscillator circuits.

The two trimmers in each of the three IF Coil Cans should be very carefully tuned to resonance as they are very critical and will greatly affect the performance of the receiver.

The sensitivity of the IF stages should be between 10 and 20 Microvolts.

On some of the models the trimmer screws extend through the bottom of the chassis as per pictorial view. On other styles the trimmers are reached through the top of each IF shield can.

5. NOTES ON ALIGNING THE R.F. AND OSCILLATOR CIRCUITS

(a) After the IF's are aligned, the various circuits may be aligned in the order given below.

(b) Keep the sensitivity adjustment all the way on to the right as before.

(c) It is not necessary that the oscillator be taken out of its socket when aligning any of the RF circuits.

(d) Always adjust the oscillator stage before the RF in any particular band.

(e) Before adjusting any band, make certain that the pointer of the station indicator is set on the last line when the dial is turned all the way to the right, on above 560 - at this point the variable condenser should be all the way in to maximum capacity. See pictorial.

(f) The plates on the variable condenser should be bent to make the KC readings on the dial line up ONLY on the Broadcast Band.

(g) Always seal the trimmers with wax or collidon after their adjustment.

(h) After the high frequency adjustments have been made on short wave bands, the test oscillator or generator should be advanced to 930 KC higher in frequency - the output voltage of generator advanced considerably and notice of the image signal of receiver oscillator falls at this point. In case this signal is not heard, the adjustment of the receiver oscillator has been incorrectly made. As an example:-

After the third short wave band has been adjusted at 20 M.C. it should be possible to move the test oscillator to 20 + 930 KC and hear the signal.

(i) Before starting with the alignment adjust antenna series condenser A - without the use of the signal generator - by turning the screw all the way down to maximum capacity, and then unloosen the screw about one half turn.

(j) Start with the third (highest frequency). Short wave band as follows:-

4. THIRD SHORT WAVE BAND

Refer to the pictorial views of the chassis.

Rotate band switch all the way to left to 25-11 Megacycle setting.

Set dial hand to 24 Megacycles.

Peak trimmer B to 24 Megacycles from the signal generator fed into the antenna.

If the set is far out of alignment, it may be necessary to use a heavy input from the generator and also vary the Antenna Coil and Mixer Coil Trimmers C and D until the heavy signal is not necessary. Make the final adjustment on C and D after the oscillator B trimmer is set.

Next, set the dial hand to 18 Megacycles on the same band and with a 18 Megacycle signal, resonance may be checked and corrected by shifting the ground lead at "V" (see pictorial) by sliding it in either direction as necessary along the bare ground wire for the greatest gain.

As mentioned above in paragraph three - the image signal may be checked to determine if the adjustments have been made on the correct signal.

5. SECOND SHORT WAVE BAND

Rotate band switch to 12-4 Megacycles.

Set dial hand to 12 Megacycles.

Peak trimmer E at 12 Megacycles.

Peak Trimmers F and G in the RF circuits on the same frequency.

Set dial hand to 4½ Megacycles on the same band.

Adjust padding condenser H to the 4½ Megacycle signal.

6. FIRST SHORT WAVE BAND

Rotate band switch to 4-1.5 Megacycles.

Set dial hand to 4 Megacycles.

Peak Trimmer I to 4 Megacycles.

Peak Trimmers J and K in the R.F. circuits to the same frequency.

Set dial hand to 1.5 Megacycles.

Adjust Padding Condenser L to resonance with 1.5 Megacycles.

7. BROADCAST BAND

Rotate band switch to "B" position.

Set dial hand to 1500 Kilocycles.

Peak Trimmer M to 1500 Kilocycles.

Peak Trimmers N and O to 1500 Kilocycles.

Set dial to 550 Kilocycles.

Adjust Padding Condenser P to resonance with 550 Kilocycles.

Recheck dial at 1500 Kilocycles.

Check the middle of the dial at 950 Kilocycles for example and bend the plates of the variable condenser if necessary to line up with the calibration.

8. THE LONG WAVE

This adjustment applies to sets that have the extra band from 150 Kilocycles to 350 Kilocycles attached.

The alignment trimmers are shown in dotted lines on the Pictorial Diagram.

Rotate band switch to its fifth position - all the way to the right.

Set dial hand to 350 Kilocycles.

Peak Trimmer Q to 350 Kilocycles from the signal generator.

Peak Trimmers R and S in the RF circuits to the same frequency.

Set dial hand to 150 Kilocycles.

Adjust Padding Condenser T at 150 Kilocycles.

9. NOTES

(a) On some series the two resistors - 800 and 2000 ohm, have been added.

(b) Refer to schematic #4903 showing changes, if any, that have been made since sets were in production.

©John F. Rider, Publisher

MODEL 324
Schematic

LAFAYETTE RADIO MFG. CO.

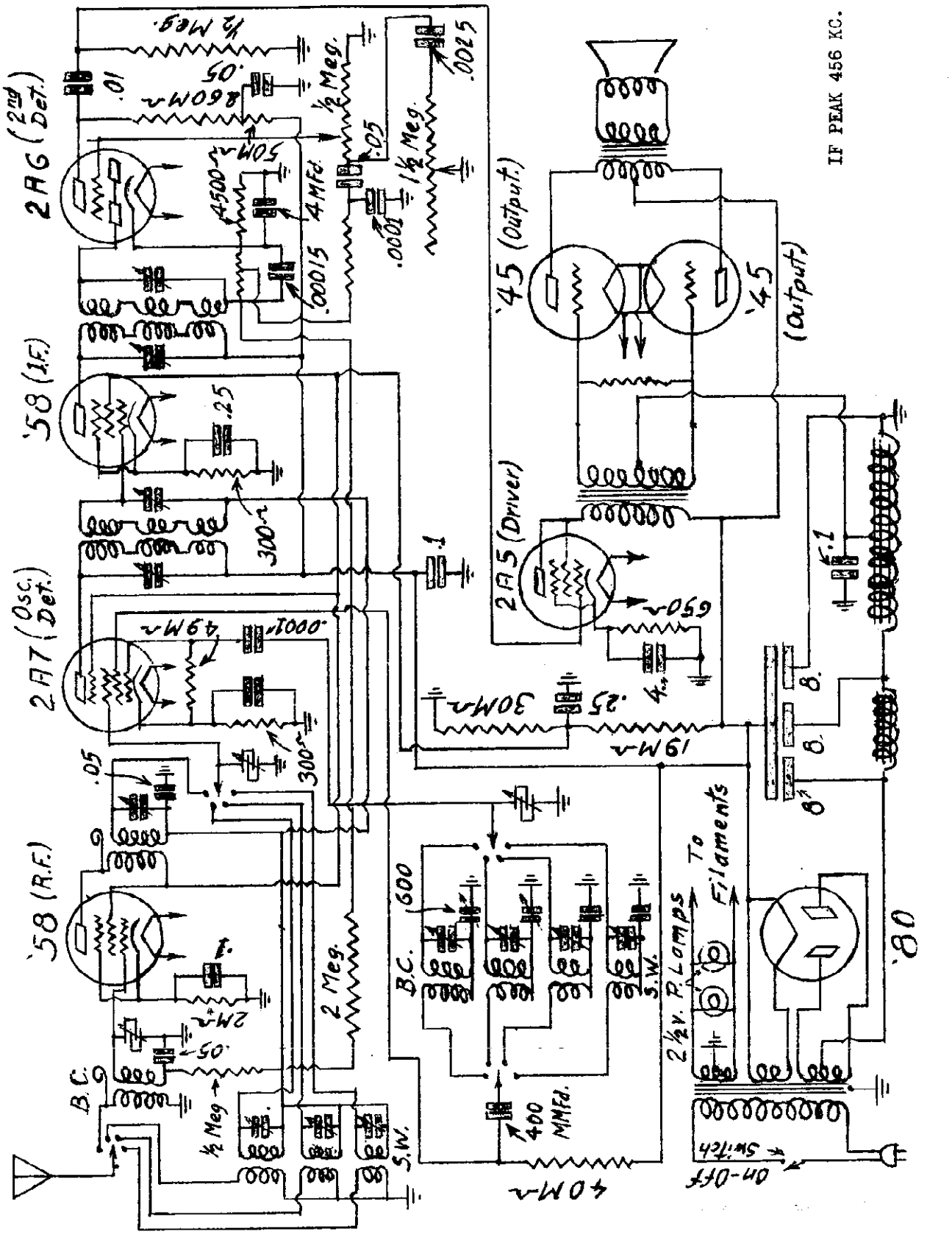

MODEL XP-15949
MODEL P-15754
Schematics

LAFAYETTE RADIO MFG. CO.

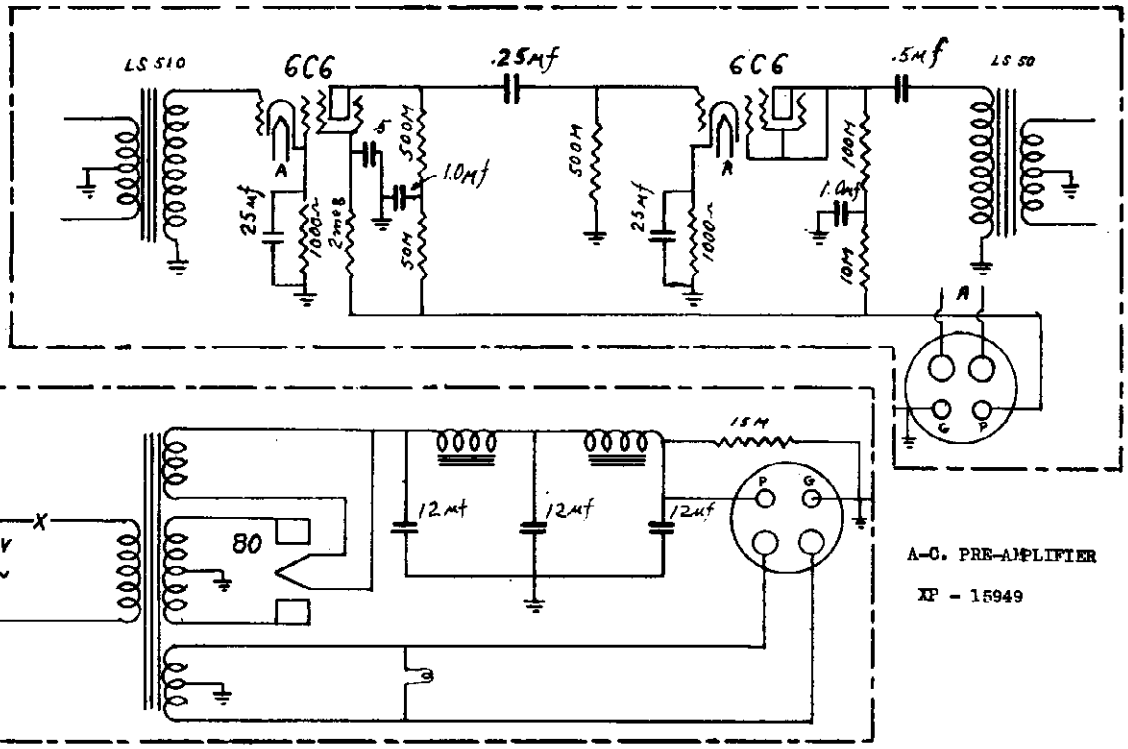

A-C. PRE-AMPLIFIER
XP - 15949

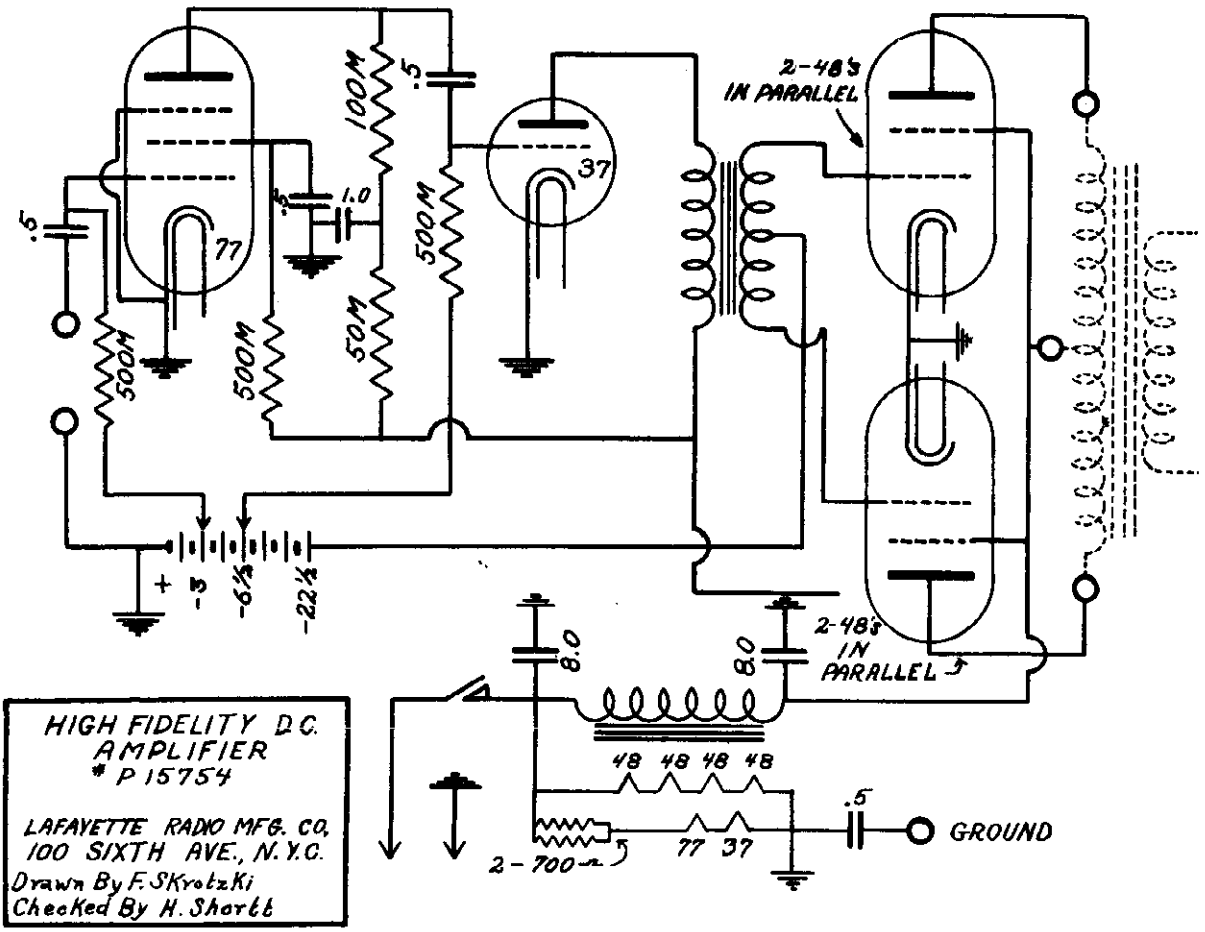

HIGH FIDELITY D.C.
AMPLIFIER
P 15754

LAFAYETTE RADIO MFG. CO.
100 SIXTH AVE., N.Y.C.
Drawn By F. SKrotzKi
Checked By H. Shortt

©John F. Rider, Publisher

R.H MACY & CO.

MODEL 410 AC-DC
Schematic
Trimmers, Alignment

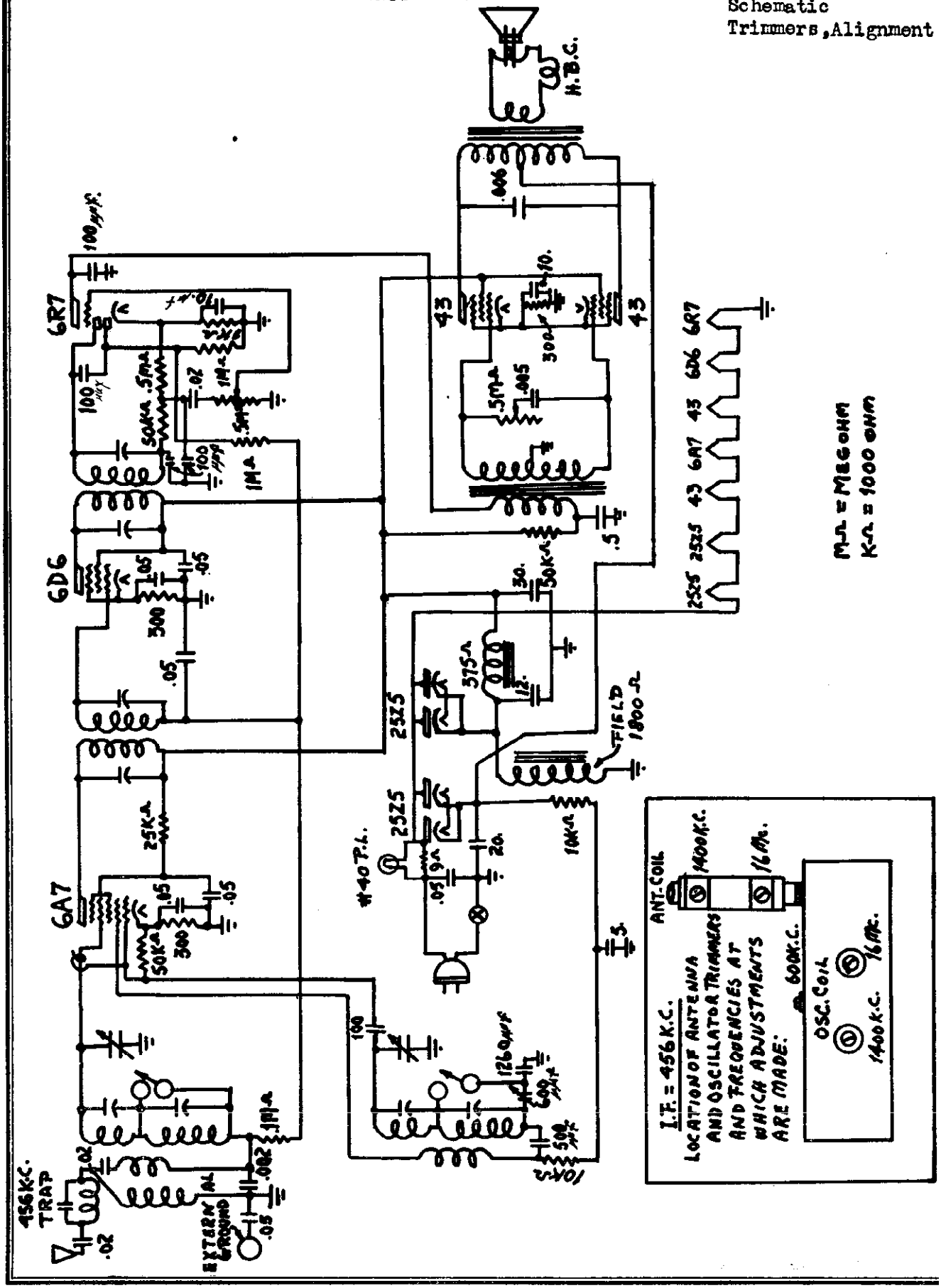

©John F. Rider, Publisher

MODEL 706-70623
Schematic
Alignment

R.H MACY & CO.

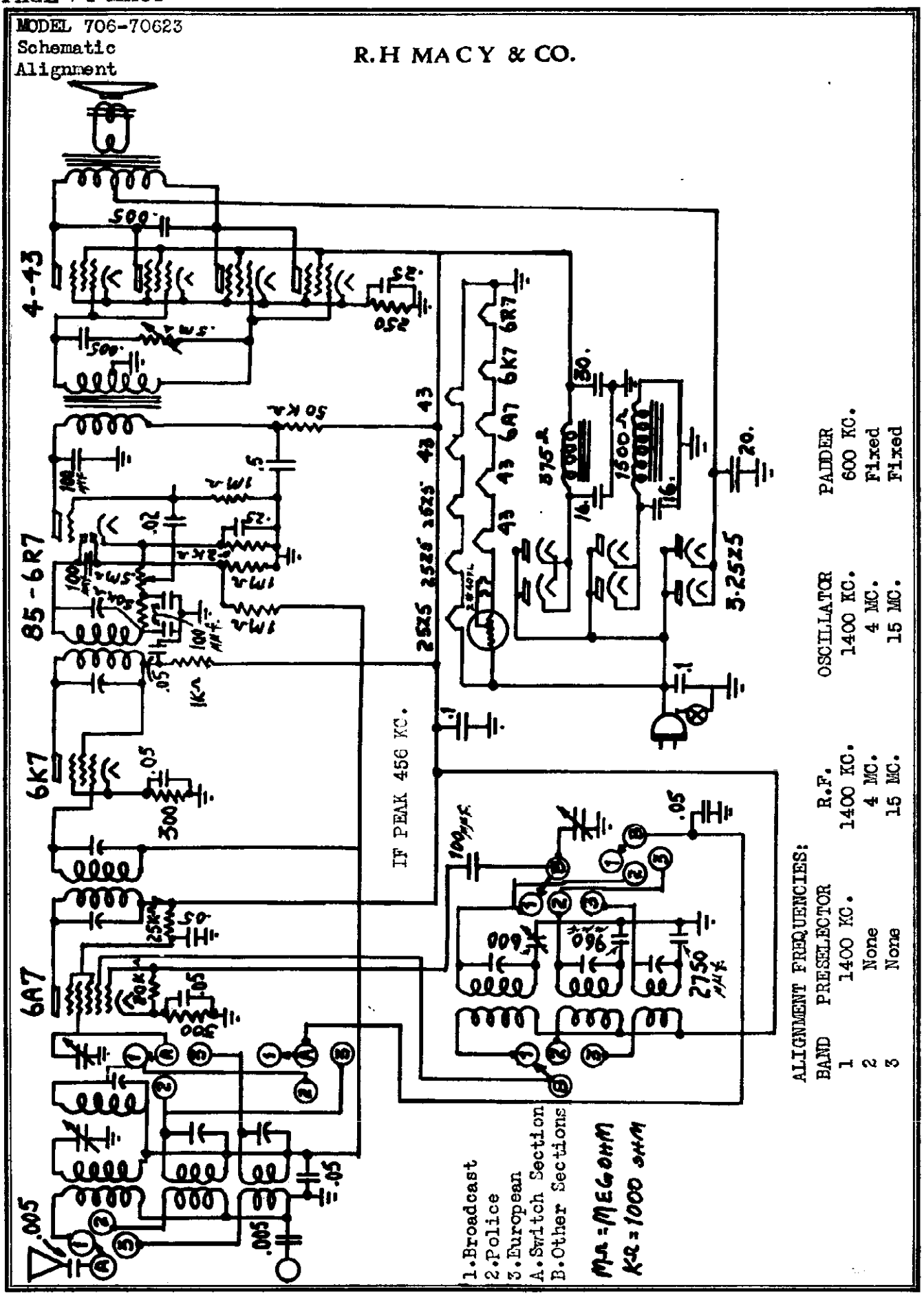

ALIGNMENT FREQUENCIES:

BAND	PRESELECTOR	R.F.	OSCILLATOR	PADDER
1	1400 KC.	1400 KC.	1400 KC.	600 KC.
2	None	4 MC.	4 MC.	Fixed
3	None	15 MC.	15 MC.	Fixed

©John F. Rider, Publisher

MAJESTIC RADIO & TELEV. CO.

MODELS 65,66,650
Schematic
Parts List

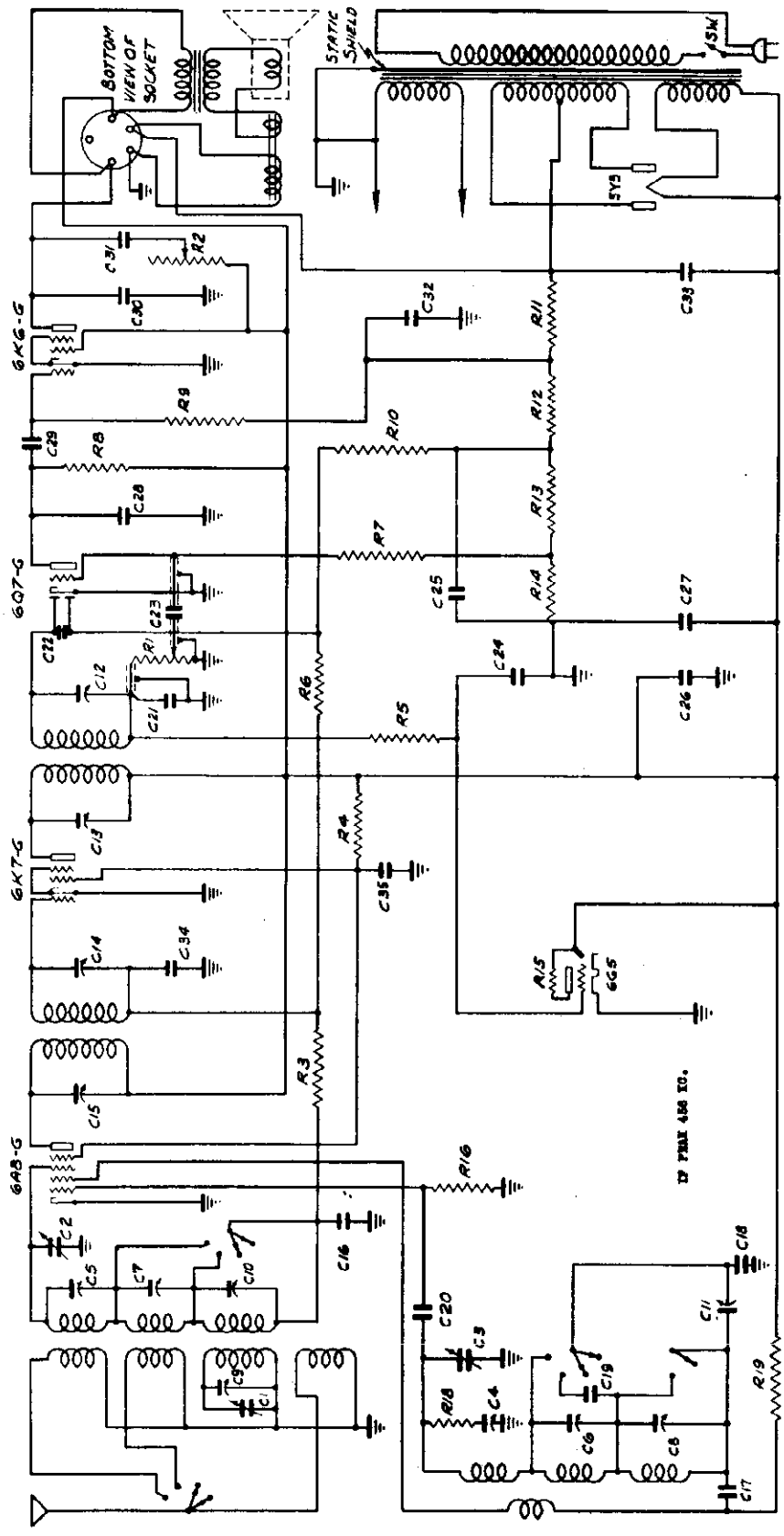

C1 C2 C3	B 16461-3	CONDENSER VARIABLE GANG				
C4 C5 C6	B 16473	CONDENSER TRIMMER	3-30 MMF.	TRIPLE STRIP BAKELITE		
C7 C8 C9 C10	B 16474	CONDENSER TRIMMER	3-30 MMF.	CERAMIC BASE		
C7	B 15246-2	CONDENSER TRIMMER	3-30 MMF.	BAKELITE BASE		
C11	B 16472	CONDENSER VARIABLE	PADDER 340 MMF - 880 MMF.			
C33	B 16466	CONDENSER WET ELECTROLYTIC	16 MMF - 350 V.			
C27	B 16467	CONDENSER WET ELECTROLYTIC	8 MMF - 250 V.			
C28	15918	CONDENSER MICA	100 MMF ± 20%	C		
C21	15928	CONDENSER MICA	250 MMF ± 20%	D		
C22 C23	15929	CONDENSER MICA	50 MMF ± 20%	D		
C17	15930	CONDENSER MICA	1000 MMF ± 10%	M		
C18	15931	CONDENSER MICA	4300 MMF ± 5%	M		
C19	15932	CONDENSER MICA	1760 MMF ± 5%	M		
C26	15750	CONDENSER TUBULAR	.25 MF	400 V.		
C14 C34	15750	CONDENSER TUBULAR	.05 MF	200 V.		
C35 C36	15754	CONDENSER TUBULAR	.01 MF	400 V.		
C35	15757	CONDENSER TUBULAR	.1 MF	400 V.		
C15	15761	CONDENSER TUBULAR	.1 MF	200 V.		

C24	15763	CONDENSER TUBULAR	.01 MF	200 V.		
C31	15764	CONDENSER TUBULAR	.05 MF	400 V.		
C32	15770	CONDENSER TUBULAR	.2 MF	200 V.		
C30	15771	CONDENSER TUBULAR	.005 MF	400 V.		
R2	B 16540-2	CONTROL TONE 150 M Ω.				
R1	B 16542-2	CONTROL VOLUME AND LINE SWITCH / MEGOHM				
R4	15501	RESISTOR	CARBON	25M Ω.	1W	± 20%
R6	15512	RESISTOR	CARBON	25M Ω.	½W	± 20%
R3	15515	RESISTOR	CARBON	100M Ω.	½W	± 20%
R5	15517	RESISTOR	CARBON	1MEGOHM	½W	± 20%
R9	15520	RESISTOR	CARBON	300M Ω.	¼W	± 20%
R8	15514	RESISTOR	CARBON	50M Ω.	¼W	± 20%
R14	15557	RESISTOR	CARBON	20M Ω.	½W	± 10%
R10	15558	RESISTOR	CARBON	10M Ω.	½W	± 20%
R7	15559	RESISTOR	CARBON	8 MEGOHM	½W	± 20%
R12	15602	RESISTOR	CARBON	250M Ω.	½W	± 10%
R11	15603	RESISTOR	CARBON	900M Ω.	½W	± 10%
R13	3320	#30 D.C.C. MANGANIN WIRE.				

©John F. Rider, Publisher

MODELS 75,76,750
Schematic
Parts List

MAJESTIC RADIO & TELEV. CO.

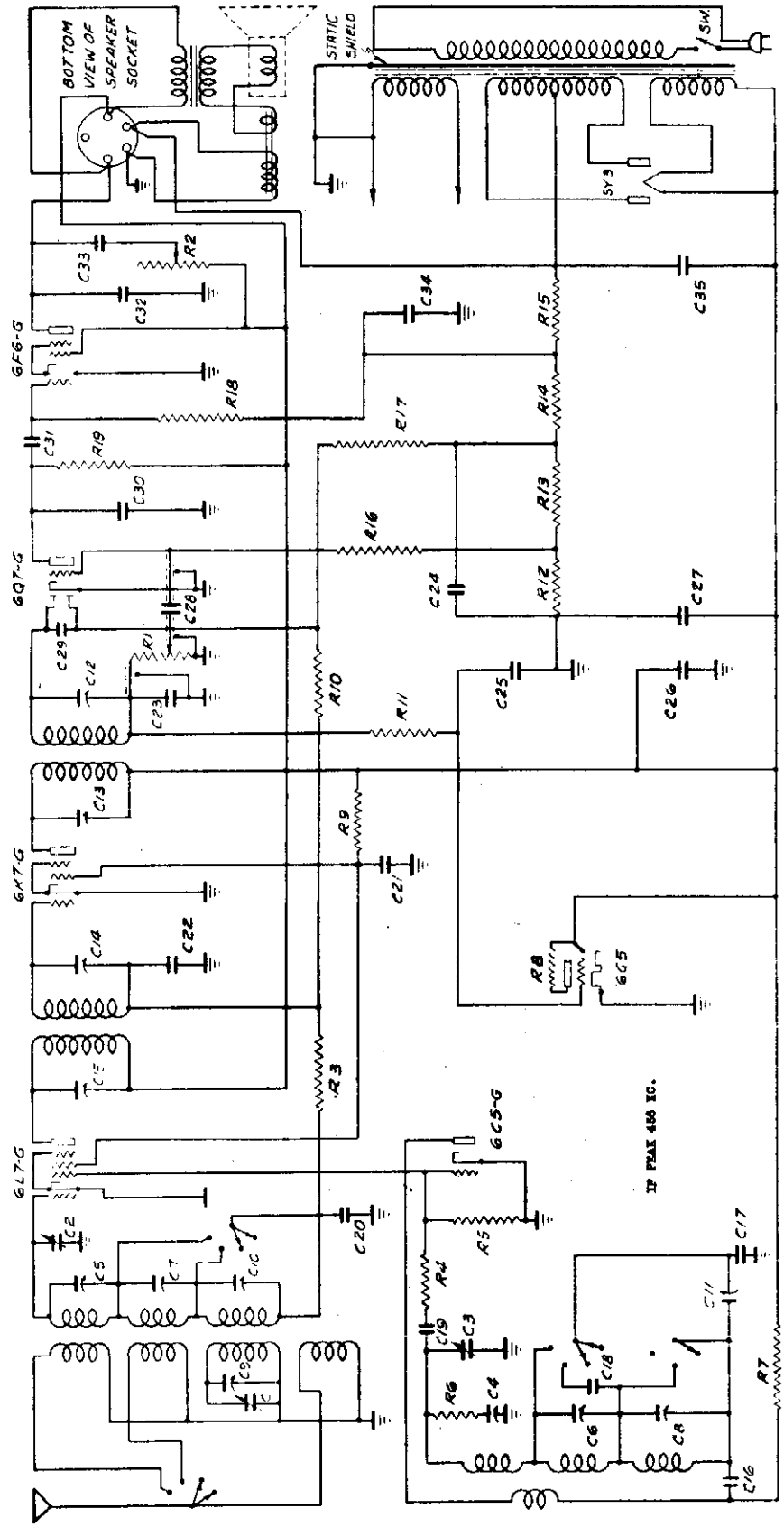

©John F. Rider, Publisher

MAJESTIC RADIO & TELEV. CO.

MODELS 85,86,850
Schematic
Parts List

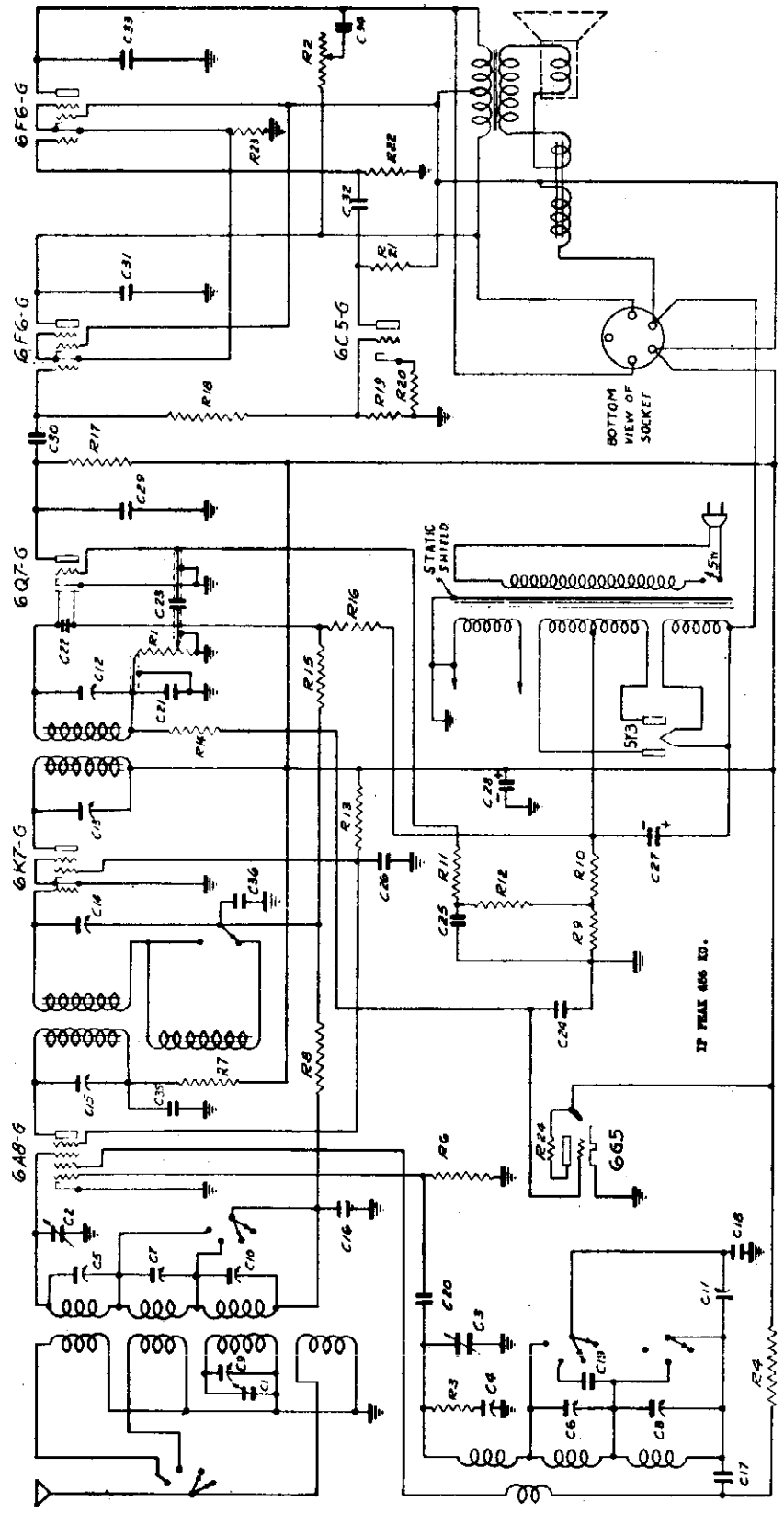

CIRCUIT CONSTANTS
85-86-850

SCHEMATIC LOCATION	PART NO.	DESCRIPTION
C1 C2 C3	B-18461-S	Condenser Variable Gang Model 86-86
C1 C2 C3	A-18543-Q	Condenser Variable Gang Model 850
C11	A-18478	Condenser Padder 340 mmf.
C4 C5 C8	A-18473	Condenser Trimmer 3-30 mmf. triple strip
C7	A-18546-Q	Condenser Trimmer 3-30 mmf. bakelite base
C5 C9 C10	A-18474	Condenser Trimmer 3-30 mmf. ceramic base
C27	A-18536-S	Condenser Wet Electrolytic 25 MFD. 400 volts
C28	A-18537-Q	Condenser Wet Electrolytic 10 MFD. 300 volts
C29	18918	Condenser Mica 100 MMFD. ± 20% Type O
C31	18928	Condenser Mica 250 MMFD. ± 20% Type O
C30 C32	18929	Condenser Mica 50 MMFD. ± 20% Type O
C17	18930	Condenser Mica 2000 MMFD. ± 20% Type O
C18	18931	Condenser Mica 4300 MMFD. ± 5% Type F
C19	18932	Condenser Mica 1760 MMFD. ± 5% Type F
C14 C36	18788	Condenser Tubular .05 MFD. 200 volts
C21 C33	18763	Condenser Tubular .006 MFD. 600 volts
C25 C30 C38	18784	Condenser Tubular .01 MFD. 400 volts
C26	18787	Condenser Tubular .1 MFD. 400 volts
C24	18765	Condenser Tubular .01 MFD. 200 volts
C34	18764	Condenser Tubular .05 MFD. 400 volts
	18770	Condenser Tubular .2 MFD. 200 volts
	18773	Condenser Tubular .2 MFD. 400 volts
	B-18539-S	Control tone with hi-fidelity switch Model 85-86
	B-18540-Q	Control tone Model 850
	B-18542-S	Control Volume
C26	18801	Resistor Carbon 25,000 ± 20% 1 watt
R2	18811	Resistor Carbon 50,000 ± 20% 1/4 watt
R1	18818	Resistor Carbon 250,000 ± 20% 1/4 watt
R13	18815	Resistor Carbon 100,000 ± 20% 1/4 watt
R12	18817	Resistor Carbon 1 meg ± 20% 1/4 watt
R17	18542	Resistor Carbon 1,000 ± 20% 1/4 watt
R8	18554	Resistor Carbon 500,000 ± 10% 1/4 watt
R14 R15 R16 R24	18586	Resistor Carbon 10,000 ± 20% 1/2 watt
R7	18569	Resistor Carbon 5 meg. ± 20% 1/4 watt
R22	3320	MB D.C.O. Manufacturers 2 Ohms
R23	18604	Resistor Carbon 450,000 ± 10% 1/4 watt
R6	18606	Resistor Carbon 150,000 ± 10% 1/4 watt
R19	18607	Resistor Carbon 640 ± 10% 2 watt
R20	18608	Resistor Carbon 850 ± 10% 1/4 watt
R25	18558	Resistor Carbon 50,000 ± 20% 1/4 watt
R12	A-18564	Resistor Combina 27.5 and 16 Ohms .345 watts
R5		
R9 R10		

©John F. Rider, Publisher

MODEL 1050
Schematic
Parts List

MAJESTIC RADIO & TELEV. CO.

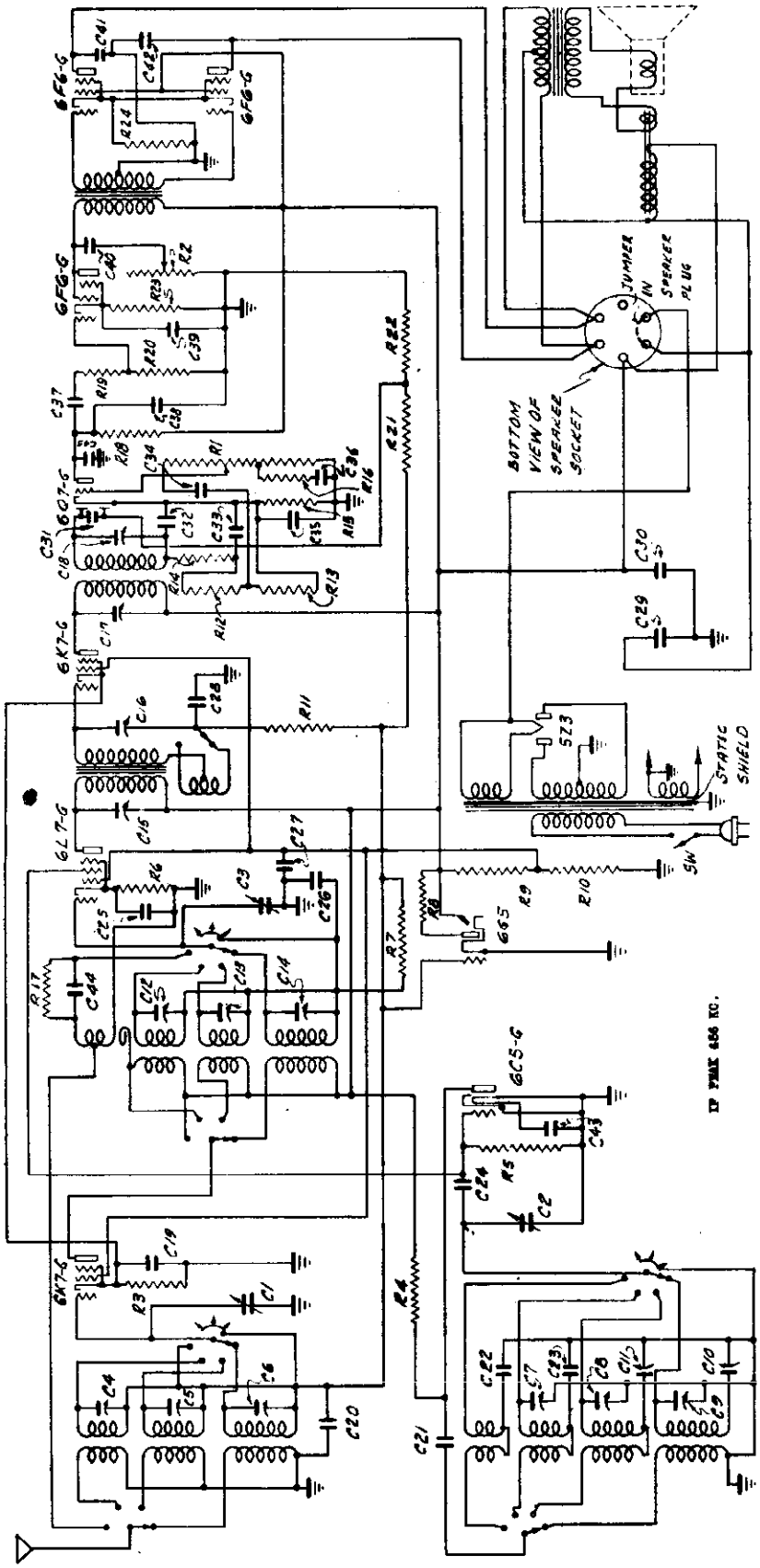

CIRCUIT CONSTANTS

Model 1050

SYMBOL	PART NO.	DESCRIPTION
C1 C2 C3	C-16543-2	Gang Condenser
C4 C5 C6	A-16588	3-30 Mmf. triple strip trimmer
C7 C8 C9	A-16588	3-30 " " " "
C12 C13 C14	A-16588	3-30 " " " "
C10 C11	B-16550	Dual padding condenser
C15 C16	B-16560-4	1st I.F. Trimmer-part of I.F. assembly
C17 C18	B-16560-4	2nd " " " " "
C19	18770	Tubular condenser .2 mfd. 200 volts
C20	18761	" " .1 mfd. 200 volts
C21 C41 C42	18785	" " .002 mfd. 600 volts
C22 C44	18924	Mica condenser 860 MMF 20% +-
C23	18986	" " 3000 MMF 5% +-
C24 C31	18989	" " 80 MMF 20% +-
C25 C26 C28	18735	Tubular condenser .05 MFD. 200 volts
C27	18787	" " .1 MFD. 400 volts
C29	B-16554-2	Wet electrolytic 30 MFD. 450 volts
C30	B-15427	" " 16 MFD. 350 volts
C32 C33 C43 C45	15918	Mica Condenser 100 MMF. 20%+-
C34	18765	Tubular condenser .01 MFD. 200 volts
C35	B-16561-3	" Dry Electrolytic 12 MFD. 18 volts
C39	B-16561-3	" " " " 25 volts
C40	15756	Tubular Condenser .05 400 volts
R1	B-16553-2	Volume Control with switch 2 megohms
R2	B-16540-2	Tone control 150,000 ohms
R3	18609	Resistor Carbon 300 ± 10% 1/4 watt
R4	18613	" " 20,000 ± 20% 1/8 watt
R5	18622	" " 80,000 ± 20% 1/4 watt
R6	18610	" " 900 ± 10% 1/4 watt
R7 R11	18615	" " 100,000 ± 20% 1/4 watt
R8 R21 R22	18617	" " 1 meg ± 20% 1/4 watt
R9	A-16615	Candohm wire wound 6500 ohms
R10	A-16615	" " 5300 "
R12 R13	18618	Resistor Carbon 250,000 ± 20% 1/4 watt
R14	18510	" " 20,000 ohms ± 20% 1/4 watt
R15	18611	" " 3000 ohms ± 10% 1/4 watt
R16	18611	" " 50,000 ohms ± 20% 1/4 watt
R18	18623	" " 200,000 ohms ± 20% 1/4 watt
R19	18649	" " 500,000 ohms ± 20% 1/4 watt
R17 R20	18620	" " 300,000 ohms ± 20% 1/4 watt
R23	18563	" " 500 ohms ± 10% 1/2 watt
R24	18562	" " 525 ohms ± 10% 2 watt

©John F. Rider, Publisher

MID-WEST RADIO CORP.

MODEL Royale
Schematic

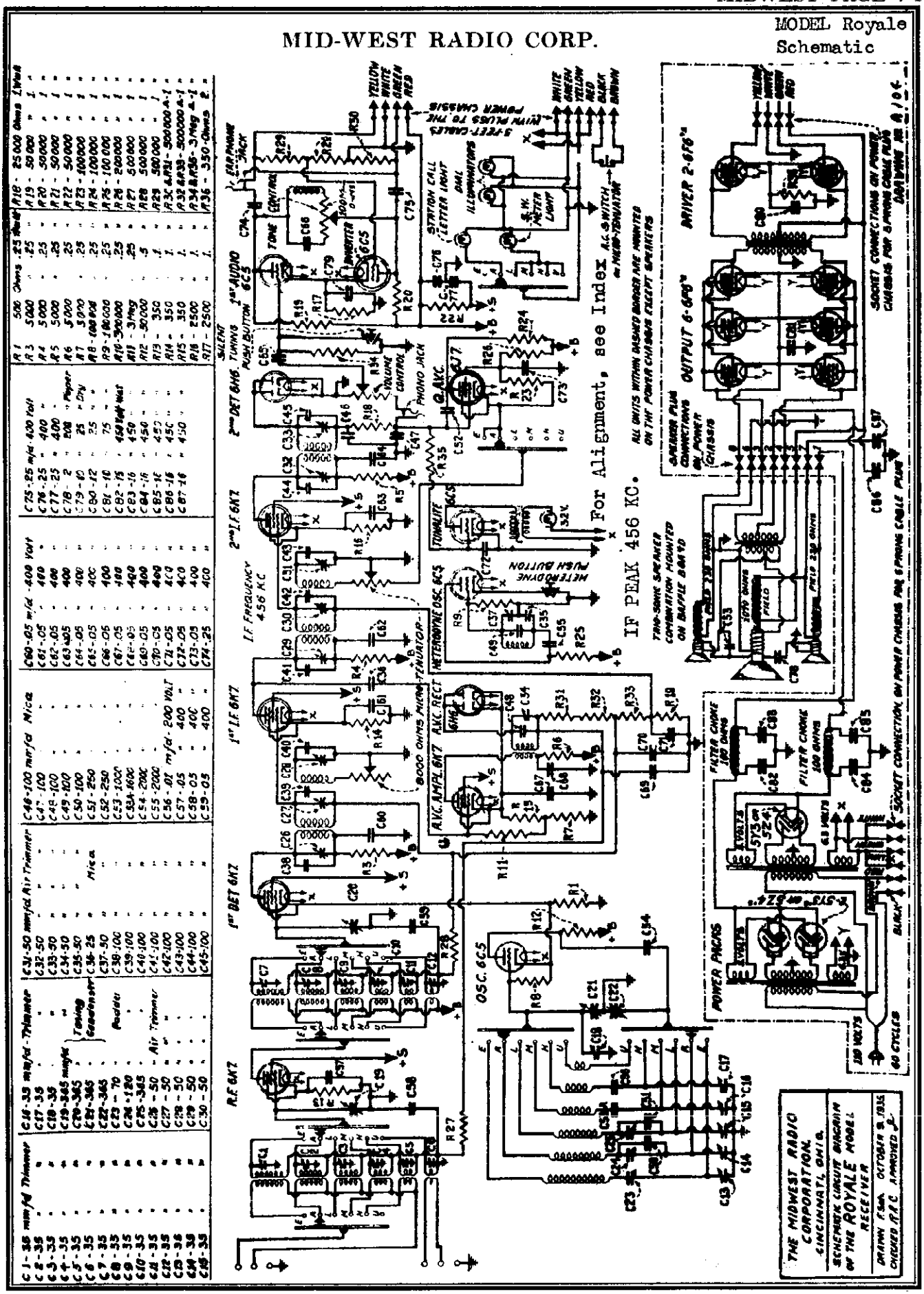

©John F. Rider, Publisher

MODEL 7-36 Early, Late
Schematic
Socket

MID-WEST RADIO CORP.

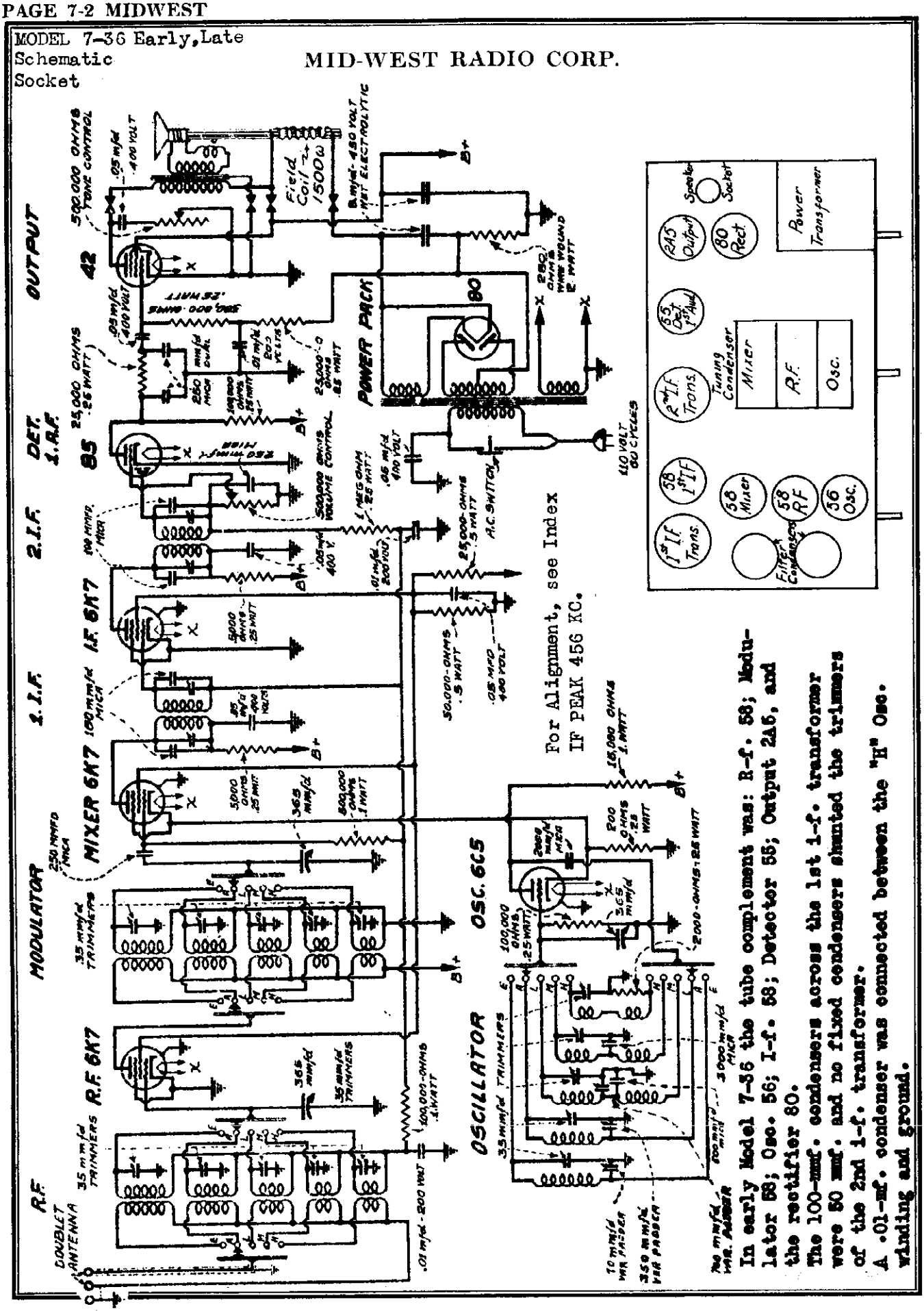

In early Model 7-36 the tube complement was: R-f. 58; Modulator 58; Osc. 56; I-f. 58; Detector 55; Output 2A5, and the rectifier 80.

The 100-mmf. condensers across the 1st i-f. transformer were 50 mmf. and no fixed condensers shunted the trimmers of the 2nd i-f. transformer.

A .01-mf. condenser was connected between the "H" Osc. winding and ground.

©John F. Rider, Publisher

MODEL 11-36
Schematic
Socket

MID-WEST RADIO CORP.

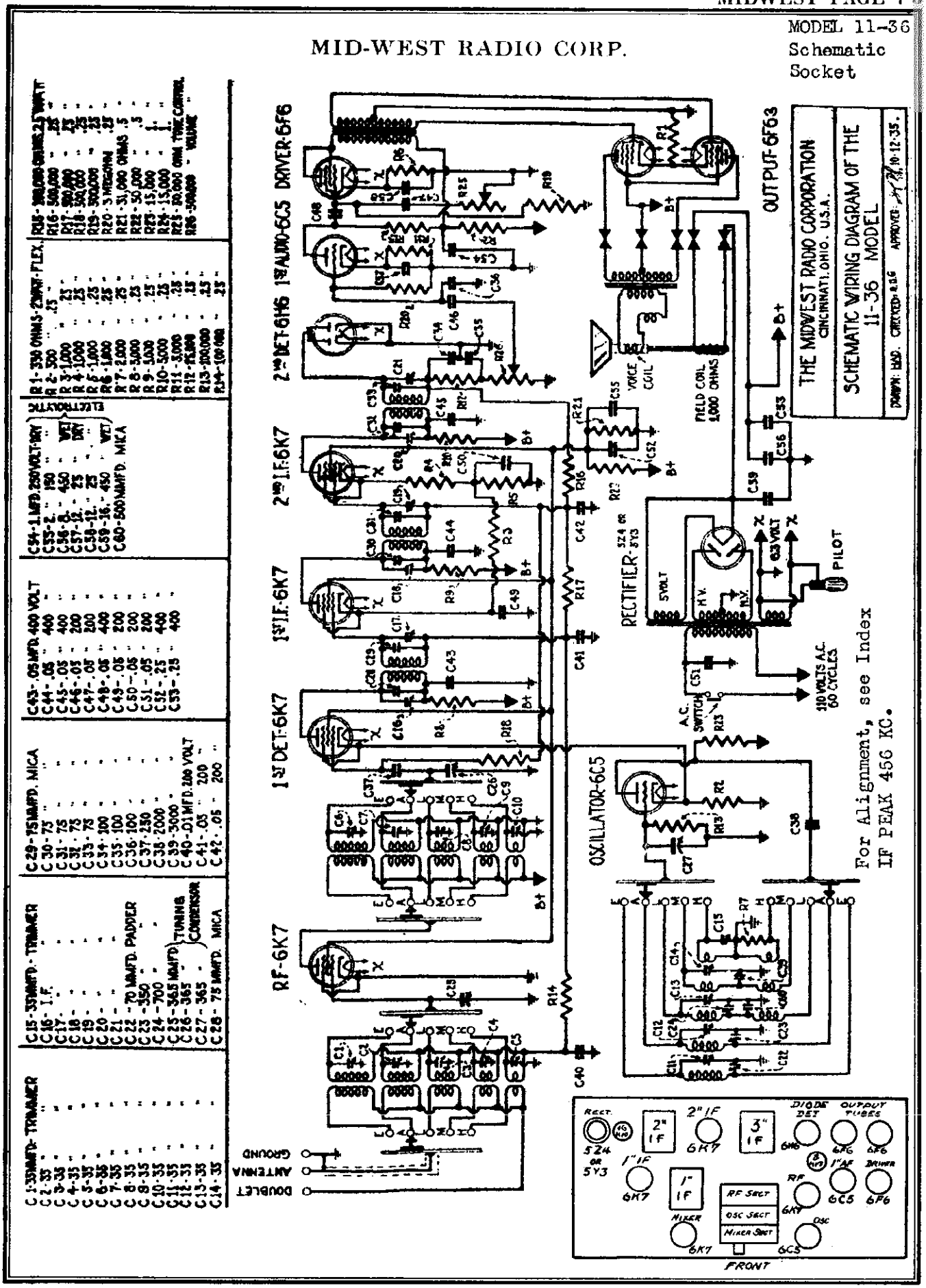

©John F. Rider, Publisher

MODEL Royale
MODEL 7-36
MODEL 11-36
MODEL 18-36
Alignment

MID-WEST RADIO CORP.

INSTRUCTIONS FOR ALIGNING THE MIDWEST 18-36 MODEL TUBE RECEIVER

A good signal generator with accurate frequency calibration and an output meter are required. An intermediate frequency of 456 k.c. is used.

(1) Set the signal generator to 456 k.c. and connect it from the mixer grid to ground.
(2) Remove the oscillator tube from the receiver.
(3) Connect the output meter from the plate of the output tube to positive B, or from the plates of one pair of tubes to the plates of the other pair of tubes.
(4) Using a weak signal approximately 20 micro-volts, align the I.F. transformers to maximum output.
(5) Increase the input from the generator of approximately 100 micro-volts. Align the A.V.C. transformer for minimum output.
(6) Repeat using weaker signal strengths for the I.F. and stronger signal strength for the A.V.C. adjustment until an absolute peak is assured.
This completes the alignment of the I.F. amplifier.

Insert the oscillator tube. Connect the signal generator and mixer grid lead between antenna and ground.

(1) Set the wave change switch to the "B" band.
(2) Set the signal generator to 135 k.c.
(3) Adjust the "B" oscillator trimmer to maximum gain, then adjust the "B" band R.F. and the "B" band mixer trimmers for maximum gain.
(4) Repeat the adjustment of trimmers and padders until the adjustment of one does not affect the adjustment of the other.
This completes the alignment of the "B" band.
(5) Set the wave change switch to the "A" band.
(6) Set the signal generator to 1480 k.c.
(7) Adjust the "A" oscillator trimmer to maximum gain, then adjust the "A" band R.F. and the A band mixer trimmers for maximum gain.
(8) Repeat the adjustment of trimmers and padders until the adjustment of one does not affect the adjustment of the other.
This completes the alignment of the "A" band.
(9) Set the wave change switch to the "A" band.
(10) Set the signal generator to 1480 k.c.
(11) Adjust the "A" oscillator trimmer to maximum gain, then adjust the "A" band R.F. and the A band mixer trimmers for maximum gain.
(12) Repeat the adjustment of trimmers and padders until the adjustment of one does not affect the adjustment of the other.
This completes the alignment of the "A" band.
(13) Set the wave change switch to the "A" band.
(14) Set the signal generator to 1480 k.c.
(15) Adjust the "A" oscillator trimmer to maximum gain, then adjust the "A" band R.F. and the A band mixer trimmers for maximum gain.
(16) Repeat the adjustment of trimmers and padders until the adjustment of one does not affect the adjustment of the other.
This completes the alignment of the "A" band.

Turn the selectivity control to the extreme left position.

(1) Set the wave change switch to the "B" band.
(2) Set the signal generator to 1400 k.c.
(3) Adjust the "B" oscillator trimmer to maximum gain, then adjust the "B" band R.F. and the "B" band mixer trimmers for maximum gain.
(4) Repeat the adjustment of trimmers and padders until the adjustment of one does not affect the adjustment of the other.
This completes the alignment of the "B" band.

Check this setting on the air for a symmetrical selectivity curve, (ie, that the tuning is broadened the same amount on both sides of the station being received.
This completes the alignment of the I.F. Amplifier.

Insert the oscillator tube. Connect the signal generator and mixer grid lead between antenna and ground.

(1) Set the wave change switch to the "B" band.
(2) Set the signal generator to 555 k.c.
(3) Adjust the "B" oscillator trimmer to maximum gain, then adjust the "B" band R.F. and the "B" band mixer trimmers for maximum gain.
(4) Repeat the signal generator to 555 k.c and rotate the receiver dial to 555 k.c.
(5) Adjust the "B" band padder for maximum signal.
(6) Repeat the adjustment of trimmers and padders until the adjustment of one does not affect that of the other.
This completes the alignment of the "B" band.
(7) Set the wave change switch to the "A" band.
(8) Set the signal generator to 1480 k.c.
(9) Adjust the A oscillator trimmer to maximum gain, then adjust the A band R.F. and A band mixer trimmers for maximum gain.
(10) Repeat the signal generator to 1480 k.c and rotate the receiver dial to 1480 k.c.
(11) Adjust the A band padder for maximum signal.
(12) Repeat adjustment of trimmers and padders until adjustment of one does not affect that of the other.
This completes the alignment of the "A" band.
(13) Set the wave change switch to the "A" band.
(14) Set the signal generator to 1.6 m.c.
(15) Adjust the "A" oscillator trimmer to maximum gain, then adjust the "A" band R.F. and the A band mixer trimmers for maximum gain.
(16) Repeat the signal generator to 1.6 m.c and rotate dial to 1.6 m.c.
(17) Adjust the "A" band padder for maximum signal.
(18) Repeat adjustment of trimmers and padders until adjustment of one does not affect that of the other.
This completes the alignment of the "A" band.

Set the wave change switch to the "A" band.
Set the signal generator to 1.6 m.c.
Adjust the "A" oscillator trimmer to maximum gain, then adjust the "A" band R.F. and the A band mixer trimmers for maximum gain.
Repeat the signal generator to 1.6 m.c and rotate dial to 1.6 m.c.
(1) Adjust the "A" band padder for maximum signal.
(2) Repeat adjustment of trimmers and padder until adjustment of one does not affect that of the other.
This completes the alignment of the "A" band.

Set the wave change switch to the "B" band.
Set the signal generator to 11.5 m.c.
Adjust the "B" oscillator trimmer to maximum gain, then adjust the "B" band R.F. and the "B" band mixer trimmers for maximum gain.
This completes the alignment of the "B" band.

Set the wave change switch to the "B" band.
Set the signal generator to 20 m.c.
Adjust the "B" band oscillator trimmer to maximum gain, then adjust the "B" band R.F. and the "B" band mixer trimmers for maximum gain.
This completes the alignment of the "B" band.

INSTRUCTIONS FOR ALIGNING THE MIDWEST 7 TUBE 1935 AND 11 TUBE 1936 MODEL RECEIVERS

A good signal generator with accurate frequency calibration and an output meter are required. An intermediate frequency of 456 k.c. is used.

(1) Set the signal generator to 456 k.c. and connect it from the mixer grid to ground.
(2) Remove the oscillator tube from the receiver.
(3) Connect the output meter from the plate of the output tube to positive B.
(4) Using a moderately weak signal approximately 40 micro-volts, align the three I.F. transformers to maximum output.
(5) Keep decreasing the oscillator input and realigning for maximum gain.

This completes the alignment of the I.F. amplifier.

Insert the oscillator tube. Connect the signal generator and mixer grid lead between antenna and ground.

(1) Set the wave change switch to the "B" Band.
(2) Set the signal generator to 555 k.c.
(3) Adjust the "B" oscillator trimmer to maximum gain, then adjust the "B" Band R.F. and the "B" Band mixer trimmers for maximum gain.
(4) Reset the signal generator to 155 k.c. and rotate the receiver dial to 155 k.c.
(5) Adjust the "B" Band padder for maximum signal.
(6) Repeat the adjustment of trimmers and padders until the adjustment of one does not affect the adjustment of the other. This completes the alignment of the "B" Band.
(1) Set the wave change switch to the "A" Band.
(2) Set the signal generator to 1490 k.c.
(3) Adjust the "A" oscillator trimmer to maximum gain, then adjust the "A" Band R.F. and the "A" Band mixer trimmers for maximum gain.
(4) Reset the signal generator to 550 k.c. and rotate the receiver dial to 550 k.c.
(5) Adjust the "A" Band padder for maximum signal.
(6) Repeat the adjustment of trimmers and padders until the adjustment of one does not affect the adjustment of the other.
This completes the alignment of the "A" Band.
(1) Set the wave change switch to the "I" Band.
(2) Set the signal generator to 5.6 m.c.
(3) Adjust the "I" oscillator trimmer to maximum gain, then adjust the "I" Band R.F. and the "I" Band mixer trimmers for maximum gain.
(4) Reset the signal generator to 1.6 m.c. and rotate the receiver dial to 1.6 m.c.
(5) Adjust the "I" Band padder for maximum signal.
(6) Repeat the adjustment of trimmers and padders until the adjustment of one does not affect the adjustment of the other.
This completes the alignment of the "I" Band.
(1) Set the wave change switch to the "H" Band.
(2) Set the signal generator to 11.5 m.c.
(3) Adjust the "H" oscillator trimmer to maximum gain, then adjust the "H" Band R.F. and the "H" Band mixer trimmers for maximum gain.
This completes the alignment of the "H" Band.

(1) Set the wave change switch to the "H" Band.
(2) Set the signal generator to 20 m.c.
(3) Adjust the "H" Band oscillator trimmer to maximum gain, then adjust the "H" Band R.F. and the "H" Band mixer trimmers for maximum gain.
This completes the alignment of the "H" Band.

©John F. Rider, Publisher

MODEL 18-36
Schematic
Socket, Trimmers

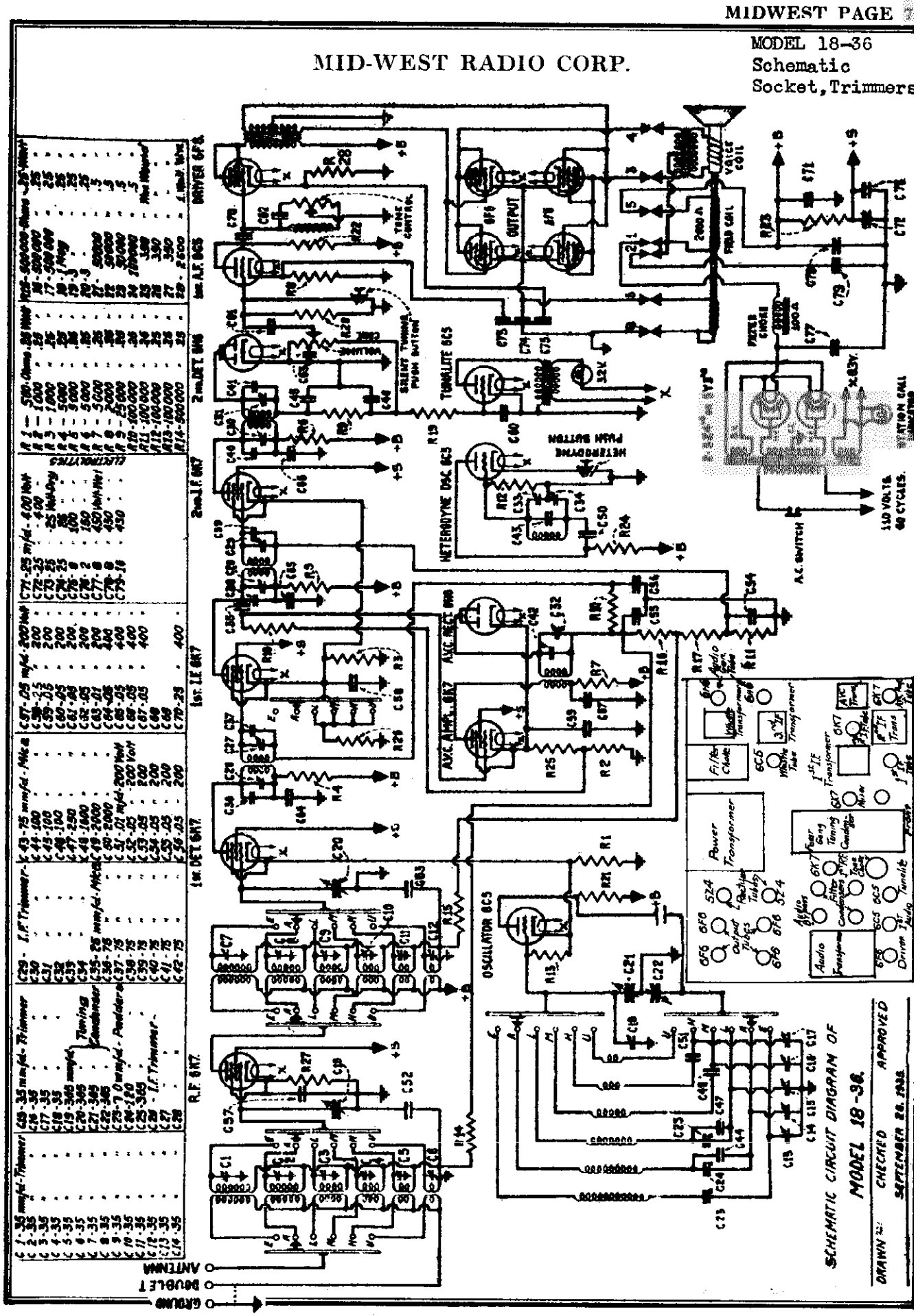

©John F. Rider, Publisher

MODEL 18-37
Schematic

MID-WEST RADIO CORP.

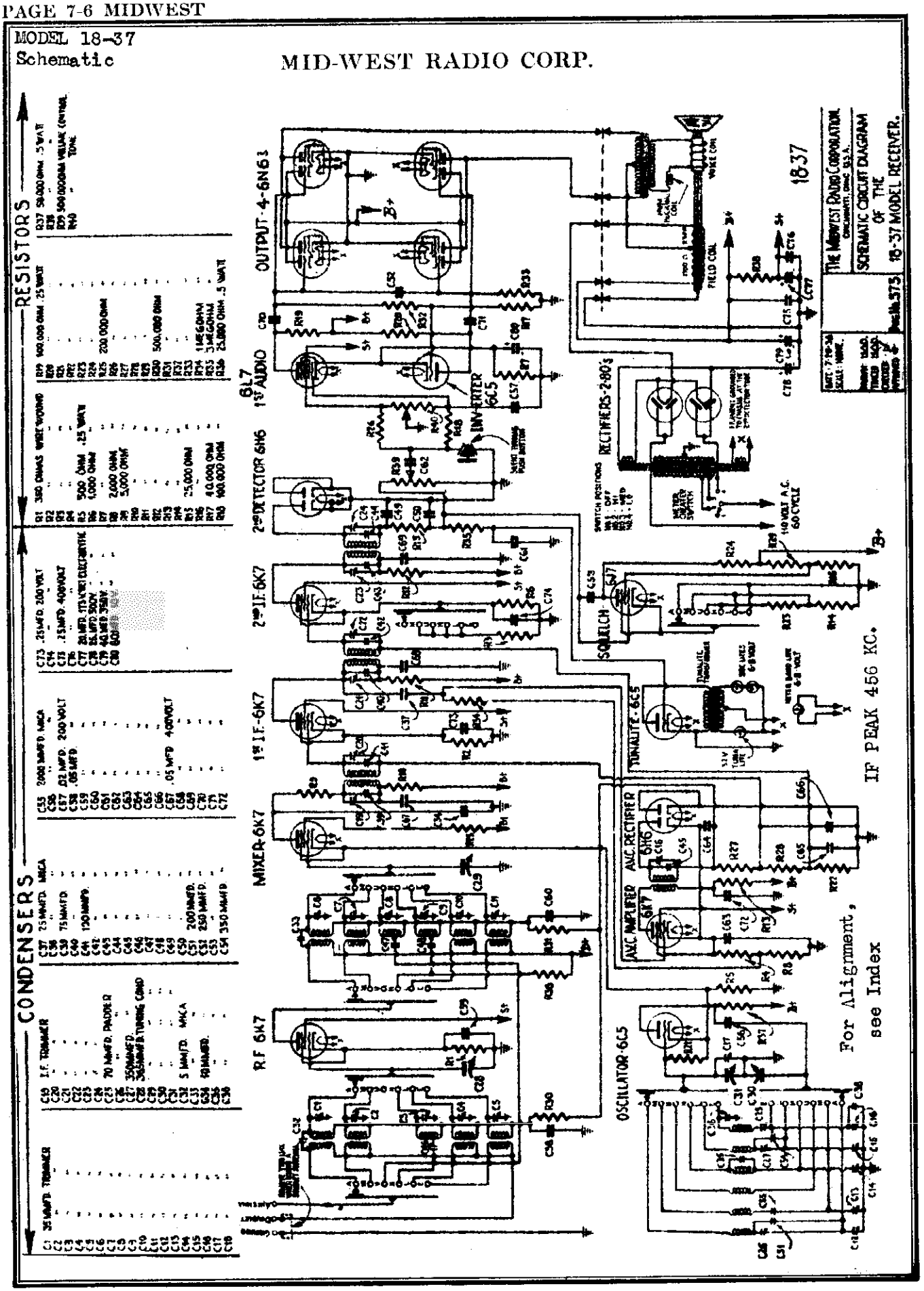

©John F. Rider, Publisher

MISSION BELL RADIO MFG. CO., INC.

MODEL 16 Auto
Schematic

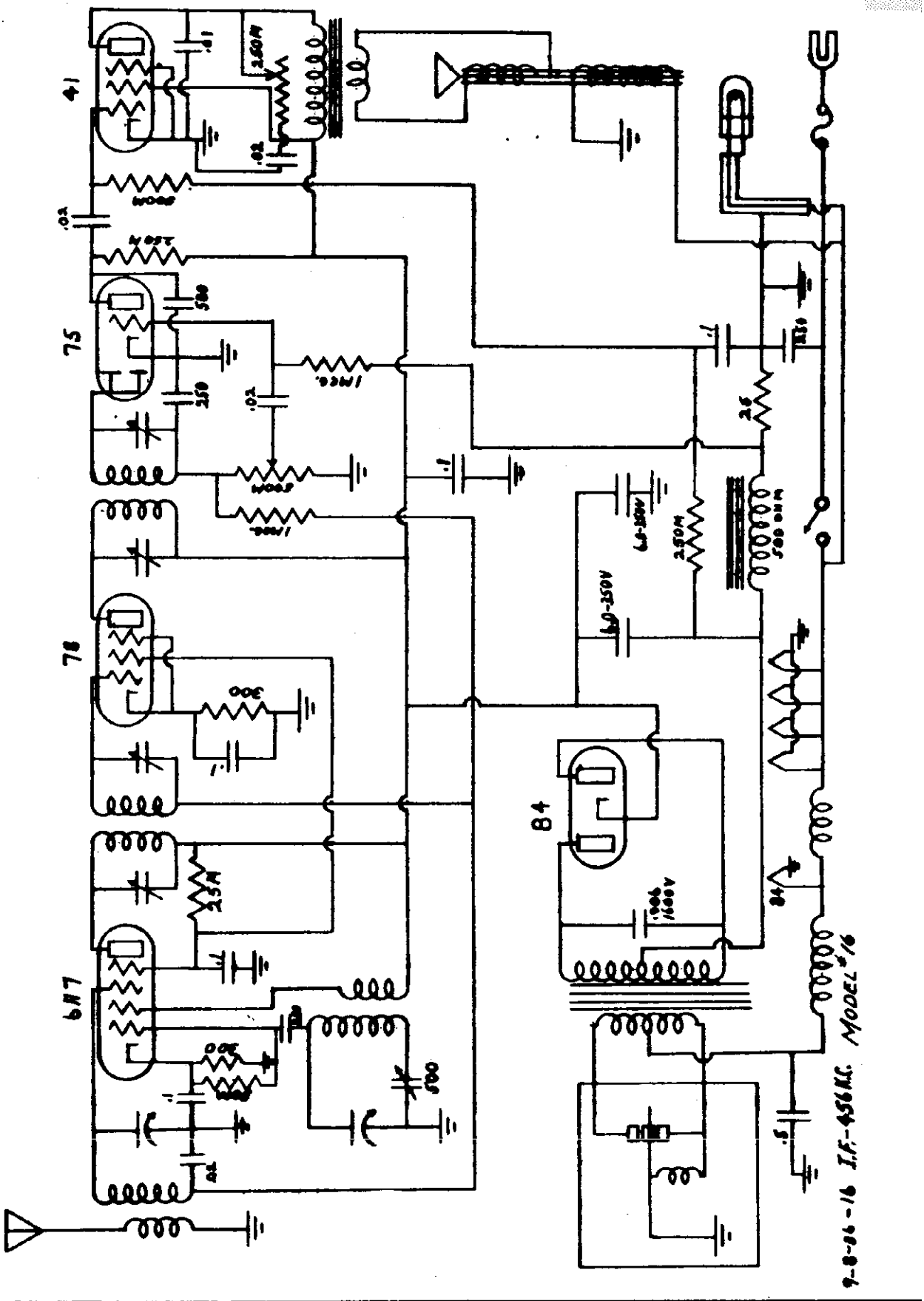

©John F. Rider, Publisher

MODELS 17,18
Schematic
Notes

MISSION BELL RADIO MFG. CO., INC.

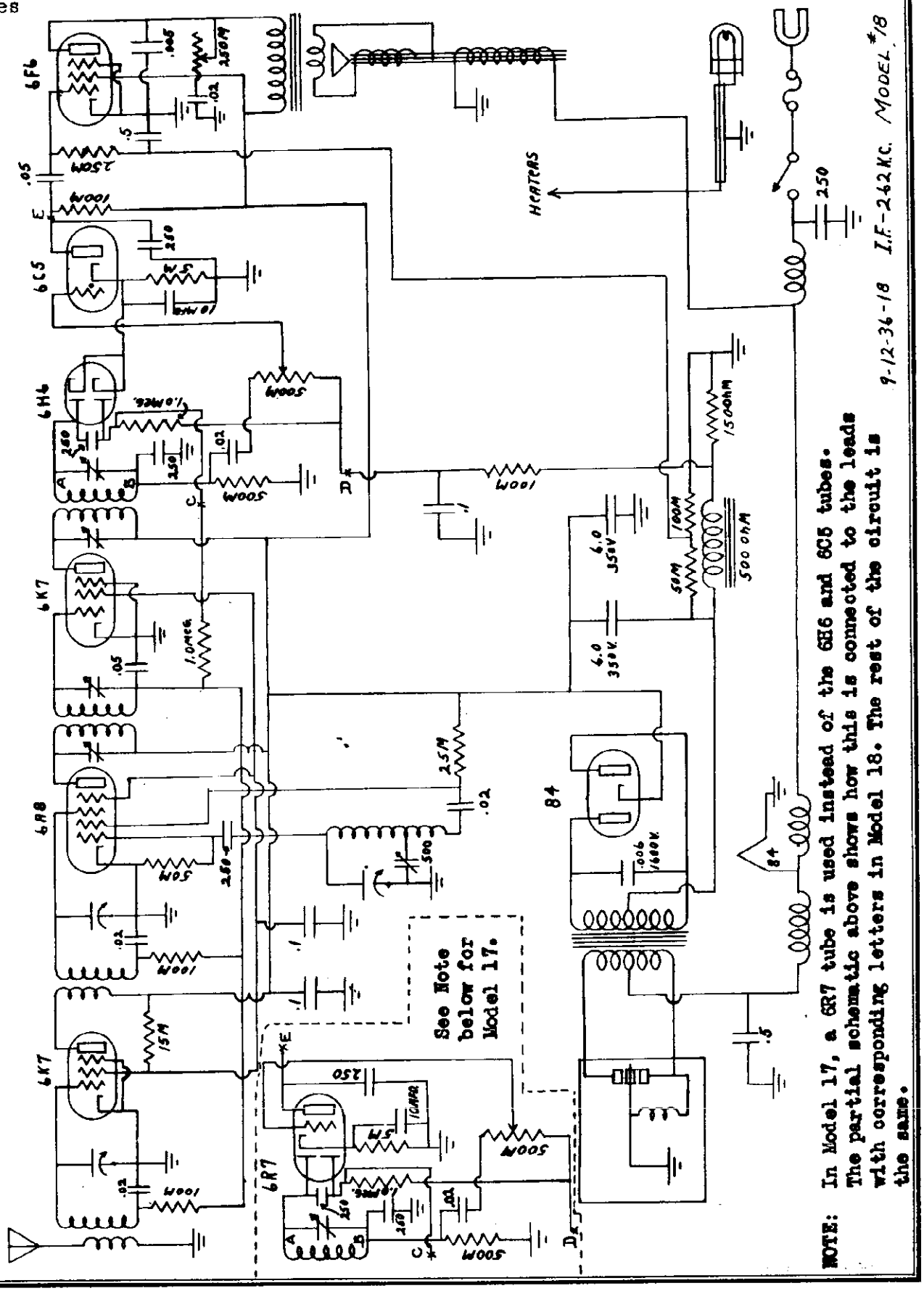

NOTE: In Model 17, a 6R7 tube is used instead of the 6H6 and 6C5 tubes. The partial schematic above shows how this is connected to the leads with corresponding letters in Model 18. The rest of the circuit is the same.

©John F. Rider, Publisher

MONTGOMERY-WARD & CO.

MODEL 62-70, 62-70X
62-72, 62-72X
Schematic, Parts

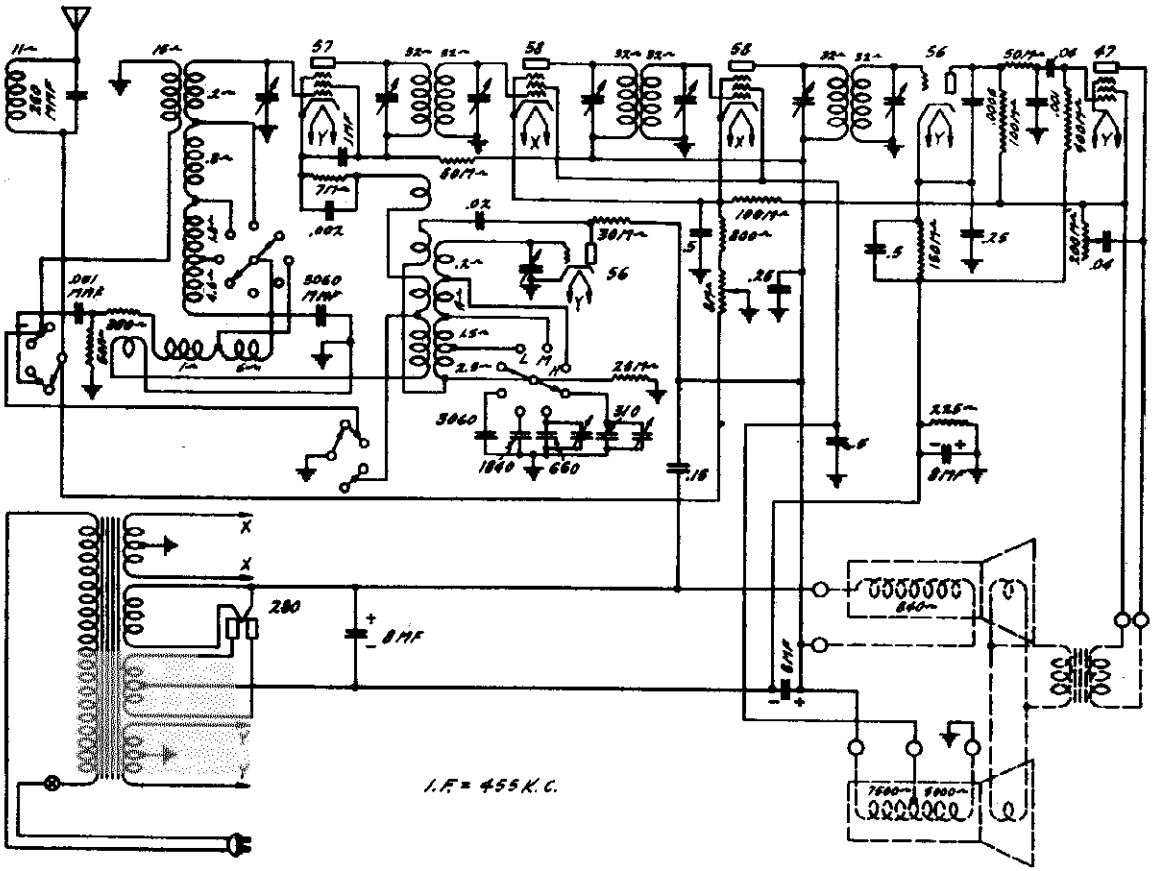

Figure 1—SCHEMATIC CIRCUIT DIAGRAM *Sept. 1932*

Part No.	Description	No. Used in Set
U 115	Pilot Light Lamp	1
U 678	Ground Binding Post	1
U 701	Tube Socket—280	1
U 705	Resistor, 25,000 Ohm, Carbon, 1 Watt	1
U 861	Attachment Cord and Plug	1
U 929	Resistor, 50,000 Ohm, Carbon, 1 Watt	2
U 962	Grid Cap	3
U1346	Resistor, 7,000 Ohm, Carbon, 1 Watt	1
U1348	Resistor, 100,000 Ohm, Carbon, 1 Watt	2
U1960	Resistor, 350 Ohm, Candohm	1
U2240	Resistor, 400,000 Ohm, Carbon, 1 Watt	1
U2333	Antenna Binding Post	1
U2716	Condenser, .01 Mfd. Tubular	1
U2757	Tube Socket—247	1
U2832	Trimmer Condenser, Oscillator	2
U2851	Condenser, .04 Mfd. Tubular	2
U2876	Walnut Knob, Station Selector, Tone Control, Volume Control	3
U3063	Resistor, 30,000 Ohm, Carbon, 1 Watt	1
U3122	Condenser, .5 Mfd. Bypass	1
U3358	Vertical Insulated Terminal	5
U3441	Power Transformer, 105-125 Volts, 60 Cyc.	1
U3443	Power Transformer, 105-125 Volts, 25 Cyc.	1
U3475	Resistor, 800 Ohm, Candohm	1
U3704	Condenser, .002 Mfd. Bypass	1
U3853	Resistor, 50,000 Ohm, Carbon, .1 Watt	1
U3963	Condenser, .5 Mfd. Bypass	2
U4116	Filter Condenser, Dual 8 Mfd., Dry Electrolytic	1
U4117	Tube Socket—57	1
U4118	Tube Socket—58	2
U4119	Condenser, Dry Electrolytic, 8 Mfd. 150 Volt, Bypass	1
U4130	Tube Socket—56	2
U4197	Condenser, .25 Mfd. Tubular	1
U4254	Condenser, 1000 Mmfd.	2
U4255	Condenser, 500 Mmfd.	1
U4411	Resistor, 150,000 Ohm, Carbon, .1 Watt	1
U4419	Image Suppressor Coil with Terminal Strip	1
U4429	Oscillator Coil Shield Can	1
U4435	Condenser, .02 Mfd. Tubular	1
U4467	Tube Shield Base—280	1
U4468	Tube Shield—280	1
U4471	Tube Shield Base—56, 57 and 58	5

Part No.	Description	No. Used in Set
U4472	Tube Shield Can—57 and 58	3
U4473	Tube Shield Cap—57 and 58	3
U4474	Tuning Condenser, Two-gang	1
U4481	Condenser, 3060 Mmfd.	2
U4482	Condenser, 1840 Mmfd.	1
U4483	Condenser, 660 Mmfd.	1
U4484	Condenser, 310 Mmfd.	1
U4487	Condenser, 250 Mmfd.	1
U4488	Tone Control & Power Switch, 200,000 Ohm	1
U4489	Volume Control, 8,000 Ohm	1
U4491	Resistor, 225 Ohm, Candohm	1
U4492	Tube Shield—56	1
U4494	8" Electrodynamic Speaker with Input Transformer	1
U4495	8" Electrodynamic Speaker without Input Transformer	1
U4496	6" Electrodynamic Speaker with Input Transformer	1
U4497	6" Electrodynamic Speaker without Input Transformer	1
U4516	Oscillator Transformer, Purple and Green Frequency Bands	1
U4518	Walnut Knob, Band Selector Switch	1
U4519	Antenna Transformer, Purple and Green Frequency Bands	1
U4522	Antenna Wave Trap, 455 Kc., with 250 Mmfd. Condenser	1
U4530	Speaker Socket, 5-Contact	1
U4531	3rd I. F. Transformer, Complete with Shield Can	1
U4532	1st I. F. Transformer, Complete with Shield Can	1
U4533	2nd I. F. Transformer, Complete with Shield Can	1
U4540	Band Selector Switch, with 3060 Mmfd. and 1840 Mmfd. Condensers and All Leads	1
U4557	Drive Plate with Dial Chart	1
U4558	Drive Disc, with Pilot Lamp Socket and Indicator	1
U4563	Antenna Transformer, Red and Black Frequency Bands	1
U4564	Oscillator Transformer, Red and Black Frequency Bands	1
U4650	Condenser, .15 Mfd.	1

©John F. Rider, Publisher

MODEL 62-70,62-70X
62-72,62-72X
Socket,Circuit Data
Voltage,Alignment

MONTGOMERY-WARD & CO.

7 Tube Long and Short Wave Dual Speaker Super-Heterodyne
No. 62-70, 62-72 (Catalogue No. 62-45, 62-47)

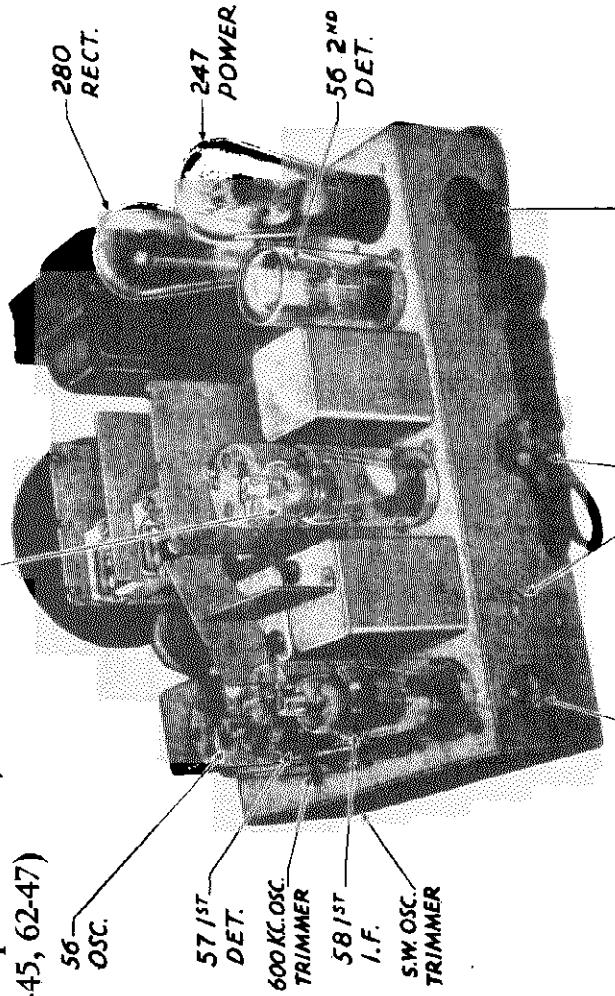

Figure 2—TOP VIEW OF CHASSIS

Voltages

With line voltage of 115 Volts; wave change switch on broadcast band; volume control at maximum; no signal being received; the following voltages (with slight variations) should be obtained on a 1000 Ohm per volt voltmeter:

PLATE VOLTAGES

Ground to plate of 57 1st Det.	153
Ground to plate of 58 1st I.F.	260
Ground to plate of 58 2nd I.F.	260
Ground to plate of 56 2nd Det.	172
Ground to plate of 47 Audio	238
Ground to plate of 56 Oscillator	60

SCREEN VOLTAGES

Ground to screen of 57 1st. Det.	153
Ground to screen of 58 1st. I.F.	95
Ground to screen of 58 2nd I.F.	95
Ground to screen of 47 Audio	250

BIAS VOLTAGES

Ground to cathode of 57 1st Det.	7.9
Ground to cathode of 58 1st I.F.	6.9
Ground to cathode of 58 2nd I.F.	6.9
Ground to cathode of 56 2nd Det.	9.5
47 Audio	16.5

(Measured across 225 Ohm Candohm)

Ground to grid of 56 Oscillator	22.5

A. C. VOLTAGES

Rectifier filament	5.0 A.C.
Other filaments	2.4 A.C.

Circuit Description

The antenna feeds into a 455 K.C. wave trap which tends to prevent any 455 K.C. signals from entering the I.F. amplifier and causing interference. A lead from this coil connects to one of the movable arms of the band changing switch and from there through the primary of the R.F. transformer to ground when the switch is thrown to the purple or green high frequency band. When receiving on the broadcast and red bands, the antenna is directly coupled to the secondary of the first R.F. transformer, through the .001M.M.F series condenser, the 350 ohm resistor and image suppressor coil. An 8000 ohm potentiometer is connected from the movable arm of the antenna switch to ground. This volume control performs a dual function by controlling the grid bias to the two type 58 intermediate frequency tubes as well as varying the signal input to the first radio frequency transformer.

The type 57 first detector or mixer is self biased by the 7000 ohm resister connected in series with the cathode and ground.

The intermediate frequency transformers are of the conventional type and are plainly shown in the diagram figure 1.

Bias voltage for the second detector type 56 is obtained by the voltage drop across the 150,000 ohm and 225 ohm resister connected between the cathode and ground.

The 47 audio stage is of the conventional type and receives its bias from the voltage drop across the 225 ohm Candohm resistor connected between the 400,000 ohm grid resistor and ground.

Short Wave Switch

Four circuits are switched with each change of the wave band switch. Diagram Figure 1, shows the position of each one of these switches when receiving on the broadcast band. Although this diagram may at first glance, appear complicated, it is comparatively simple if the receiver is first considered as a regular broadcast receiver with the switches in the position shown in the diagram Figure 1. In this position the antenna is directly coupled to the secondary of the first R.F. transformer, and the total secondary inductance of the first R.F. transformer as well as the secondary of the oscillator transformer are connected in circuit. When the wave band switch is changed to the shorter wave length, the wave band switch merely cuts out part of the secondary of the R.F. transformer, and secondary of the oscillator transformer and at the same time, short circuits or dead-ends the unused portion of these coils. The first R.F. stage consists of fixed inductances and fixed condensers which are automatically in resonance on the shorter wave band. If the receiver is operating properly on the broadcast band, no adjustments are necessary in this stage when the switch is in any one of the short wave positions. The oscillator stage is tuned automatically in like manner with the exception that one trimming condenser is provided for operation on the short wave band.

Condenser Alignment

This receiver is aligned on the broadcast band in the same manner as any of our other superheterodynes previously described. Turn the wave band changing switch to the black or broadcast band and align the R.F., oscillator, and I.F., stages, either on a broadcast signal or an oscillator as explained in the Blue Service manual insert on aligning. The 600 kilocycle tracking condenser is located adjacent to the 56 oscillator tube. If the broadcast circuits are properly aligned the short wave band circuits automatically are in alignment unless there is a defect in the short wave section of the R.F. coil or oscillator coil, or unless one of the oscillator fixed tracking condensers are defective. Only one aligning adjustment is provided for the short wave band, this is the oscillator tracking condenser and is located on the side of the chassis directly beneath the 600 kilocycle tracking condenser adjustment. In order to properly adjust the short wave band oscillator tracking condenser, turn the band selector switch to the red band and tune in a short wave station such as a police broadcast or a broadcasting station of approximately 1500 to 1350 kilocycles and adjust the oscillator tracking condenser for maximum speaker volume, at the same time rocking the tuning dial slowly back and forth across the signal. In order to make this adjustment it is necessary to remove the chassis from the cabinet. It is advisable to use a bakelite or non metallic screw driver when adjusting these screws.

Twenty-Five Cycle Chassis

The 25 cycle chassis uses 25 cycle power transformer, part No. U3443 instead of power transformer No. U3441.

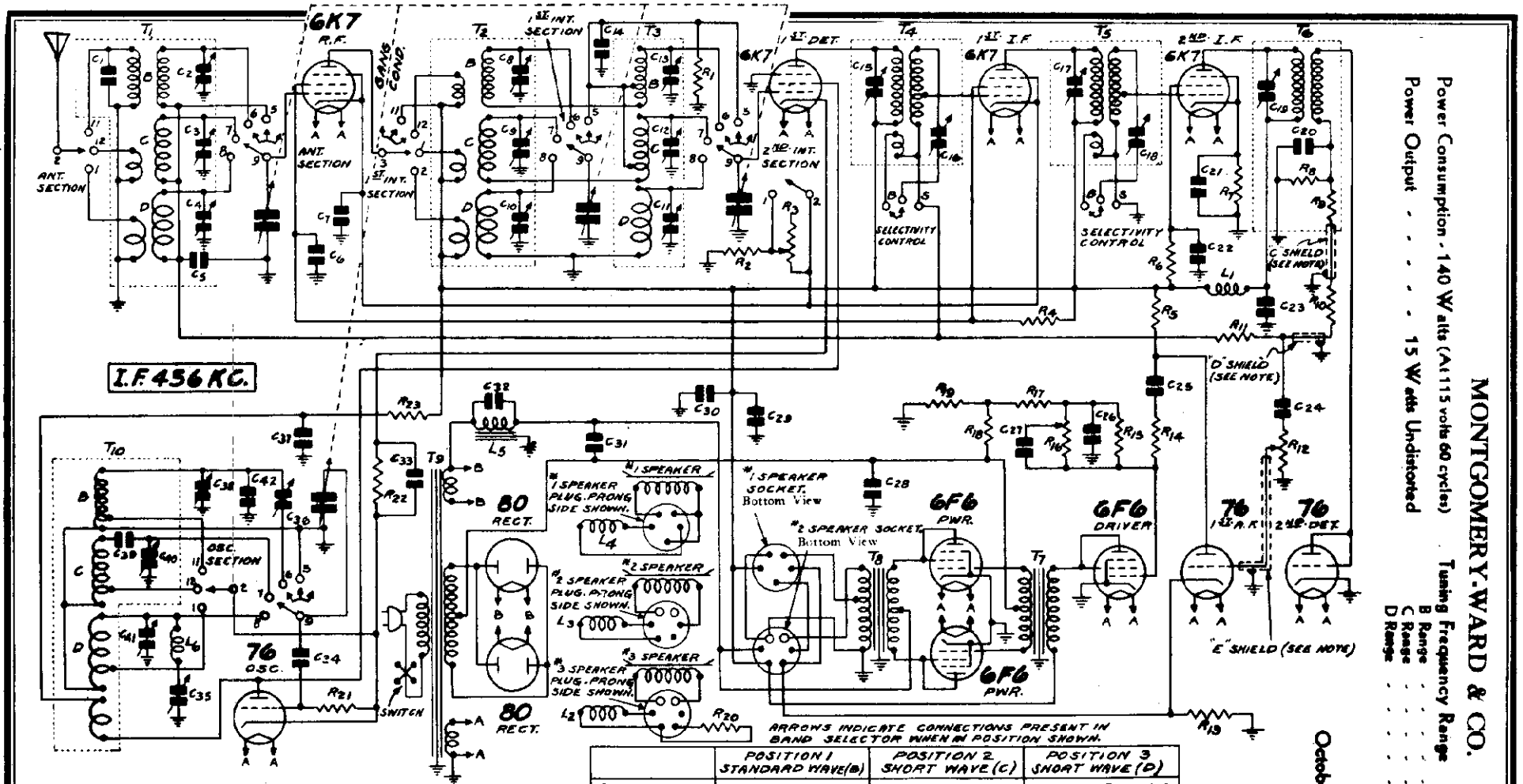

	POSITION 1 STANDARD WAVE (B)	POSITION 2 SHORT WAVE (C)	POSITION 3 SHORT WAVE (D)
OSC. AND ANT. SECTION	11 12 1 2 5 6 7 8 9	11 12 1 2 5 6 7 8 9	11 12 1 2 5 6 7 8 9
2ND INT. SECTION	1 2 5 6 7 8 9	1 2 5 6 7 8 9	1 2 5 6 7 8 9
1ST INT. SECTION	11 12 1 2 3 5 6 7 8 9	11 12 1 2 3 5 6 7 8 9	11 12 1 2 3 5 6 7 8 9

CONTACT LOCATIONS 3, 4 AND 10 IN OSC. AND ANT. SECTIONS, 3, 4, 10, 11 AND 12 IN 2ND INT. SECTION AND 4 AND 10 IN 1ST INT. SECTION ARE BLANK.

GROUPS OF CIRCUIT ELEMENTS ENCLOSED IN DOTTED RECTANGLES COMPRISE DISTINCT MECHANICAL ASSEMBLIES.
"B" AND "S" ON SELECTIVITY CONTROL DENOTES BROAD AND SHARP RESPECTIVELY.
THE CAPACITY OF THE "C" SHIELD IS 20 μμf.
THE CAPACITY OF THE "D" SHIELD IS 70 μμf.
THE CAPACITY OF THE "E" SHIELD IS 16 μμf.
ON SETS USING ONE SPEAKER THE #3 SPEAKER IS FURNISHED.
ON SETS USING TWO SPEAKERS THE #1 AND #2 SPEAKERS ARE FURNISHED.

C 1	250 mmf.	C13	2-25 mmf.	C25	.05 mf. 360 V.	C37	.25 mf. 360 V.	R 5	60,000 ohm 0.5 watt	R18	128 ohm 2.5 watt } Armored	T 6	3rd I.F. Trans.
C 2	2-25 mmf.	C14	.05 mf. 180 V.	C26	.25 mf. 180 V.	C38	2-25 mmf.	R 6	100,000 ohm 0.5 watt	R19	145 ohm 3.0 watt } Wire-Wound	T 7	Push-Pull Input Trans.
C 3	2-25 mmf.	C15	150-250 mmf. } One	C27	.004 mf. 600 V.	C39	1400 mmf.	R 7	500 ohm 0.2 watt	R20	7800 ohm 12.0 watt	T 8	Push-Pull Output Trans.
C 4	2-25 mmf.	C16	150-250 mmf. } Unit	C28	125.0 mf. 45 V. Electrolytic	C40	2-25 mmf.	R 8	200,000 ohm 0.5 watt	R21	80,000 ohm 0.2 watt	T 9	Power Trans.
C 5	.05 mf. 180 V.	C17	150-250 mmf. } One	C29	18.0 mf. 290 V. Electrolytic	C41	2-25 mmf.	R 9	100,000 ohm 0.2 watt	R22	2,500 ohm 0.2 watt	T10	Osc. Inductors
C 6	.70 mf. 360 V.	C18	150-250 mmf. } Unit	C30	.25 mf. 360 V.	C42	10 mmf.	R10	100,000 ohm 0.2 watt	R23	27,000 ohm 1.0 watt		
C 7	.25 mf. 180 V.	C19	70-150 mmf.	C31	30.0 mf. 450 V. Electrolytic			R11	2.0 megohm 0.2 watt			L 1	2nd I. F. Plate Isolating Reactor
C 8	2-25 mmf.	C20	50 mmf.	C32	.15 mf. 280 V. A. C.	R 1	25,000 ohm 0.2 watt	R13	200 ohm 0.5 watt	T 1	Ant. R.F. Trans.	L 2	No. 3 Speaker Field (1000 ohm)
C 9	2-25 mmf.	C21	.05 mf. 180 V.	C33	.05 mf. 180 V.	R 2	150 ohm 0.2 watt	R14	250,000 ohm 0.2 watt	T 2	1st Interstage R.F. Trans.	L 3	No. 2 Speaker Field (1000 ohm)
C10	2-25 mmf.	C22	.05 mf. 360 V.	C34	35 mmf.	R 3	2500 ohm } Dual Volume	R15	250,000 ohm 0.2 watt	T 3	2nd Interstage R.F. Trans.	L 4	No. 1 Speaker Field (6400 ohm)
C11	2-25 mmf.	C23	.10 mf. 360 V.	C35	40-100 mmf. } One	R12	2.0 megohm } Control	R16	3.0 megohm Tone Control	T 4	1st I.F. Trans.	L 5	Choke Coil
C12	2-25 mmf.	C24	.01 mf. 480 V.	C36	300-600 mmf. } Unit	R 4	50,000 ohm 1.0 watt	R17	100,000 ohm 0.2 watt	T 5	2nd I.F. Trans.	L 6	Osc. Tracking Coil

MONTGOMERY-WARD & CO.

Power Consumption - 140 Watts (At 115 volts 60 cycles)
Power Output . . . . . 15 Watts Undistorted

Tuning Frequency Range

B Range	535 to 1730 KC.
C Range	1715 to 5800 KC.
D Range	5750 to 18300 KC.

MODEL 62-192, 62-195
Schematic

October, 1935

MONT. WARD PAGE 7-

MODELS 62-192, 62-195
Socket, Trimmers
Voltage, Phono., Changes

MONTGOMERY-WARD & CO.

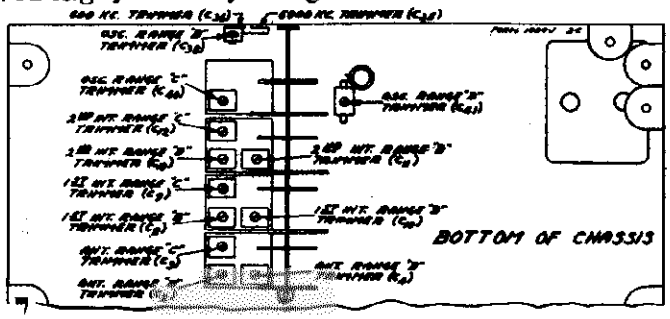

Fig. 3—Location of Trimmers

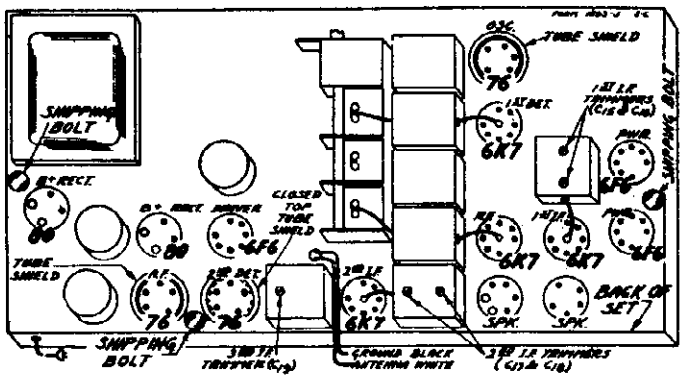

Fig. 5—Location of Tubes

Phonograph Connections

The connections are made by opening the diode circuit at the volume control. Unsolder the condenser C24 from the lug on the volume control and reconnect this condenser to the new terminal strip provided (see parts list). This terminal strip should be secured to the inside of the front panel of the chassis base at a point near the volume control and should be soldered in position. From the terminal lug on the above strip, and from the volume control lug from which the condenser C24 was removed, connect leads to the phono switch on the rear panel of the chassis as shown in Fig. 7. Before connecting these two leads permanently to the switch, twist them together and enclose them in the shielded sleeving provided, being sure to ground the shielding at the extreme ends to the chassis base. At the point where the shielding passes the electrolytic condenser cover the cable with insulating tape. Complete the connections as shown in Fig. 7.

A high impedance phonograph pickup of good quality should be used. If a low impedance pickup is used, a step-up transformer will be required for sufficient volume. The volume control and tone control of the set will regulate the phono volume and tone.

VOLTAGES AT SOCKETS
Line Voltage 115 - Antenna Shorted to Ground
Volume Control at Maximum

Tube	Function	Across Heater	Plate to Ground	Screen to Ground	Cath. to Ground	Cath. M A
6K7	R. F.	6.2	245	80	2.8	7.6
6K7	1st Det.	6.2	245	90	6.5	2.6
76	Osc.	6.2	90			5.3
6K7	1st I. F.	6.2	245	80	2.8	7.6
6K7	2nd I. F.	6.2	245	74	3.9	7.0
76	2nd Det.	6.2				
76	1st A. F.	6.2	110		5.6	2.1
6F6	Driver	6.2	235	230	20.0(1)	27.0
6F6	Power	6.2	345	345	38.0(2)	22.5
80	Rectifier	5.1	500(3)			140.0(4)

(1) As read across R19
(2) Grid to Ground
(3) Plate to Center Tap
(4) Two tubes in parallel

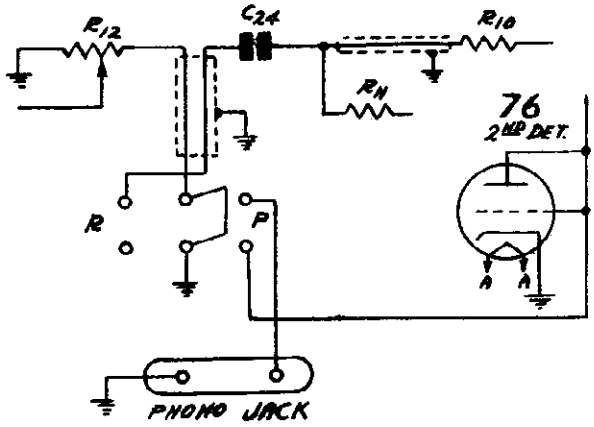

Fig. 7—Phonograph Connections

Changes in Early Models

In early models all chassis had two speaker sockets as shown in the schematic diagram—Fig. 2. In later models the 5 prong socket (No. 1 in schematic) is not in the chassis. The leads shown between the two speaker sockets, the lead from the B+ line and the lead from the Output Transformer to this socket are, therefore, eliminated. In both types of chassis the same speaker is used (No. 3 speaker with 6 prong plug).

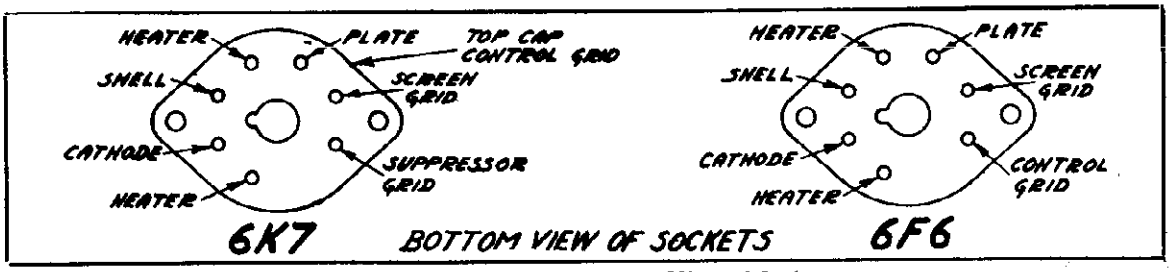

Fig. 6—Metal Tubes—Bottom View of Sockets

©John F. Rider, Publisher

MONTGOMERY-WARD & CO.

MODELS 62-192, 62-195
Coil Data, Resistance

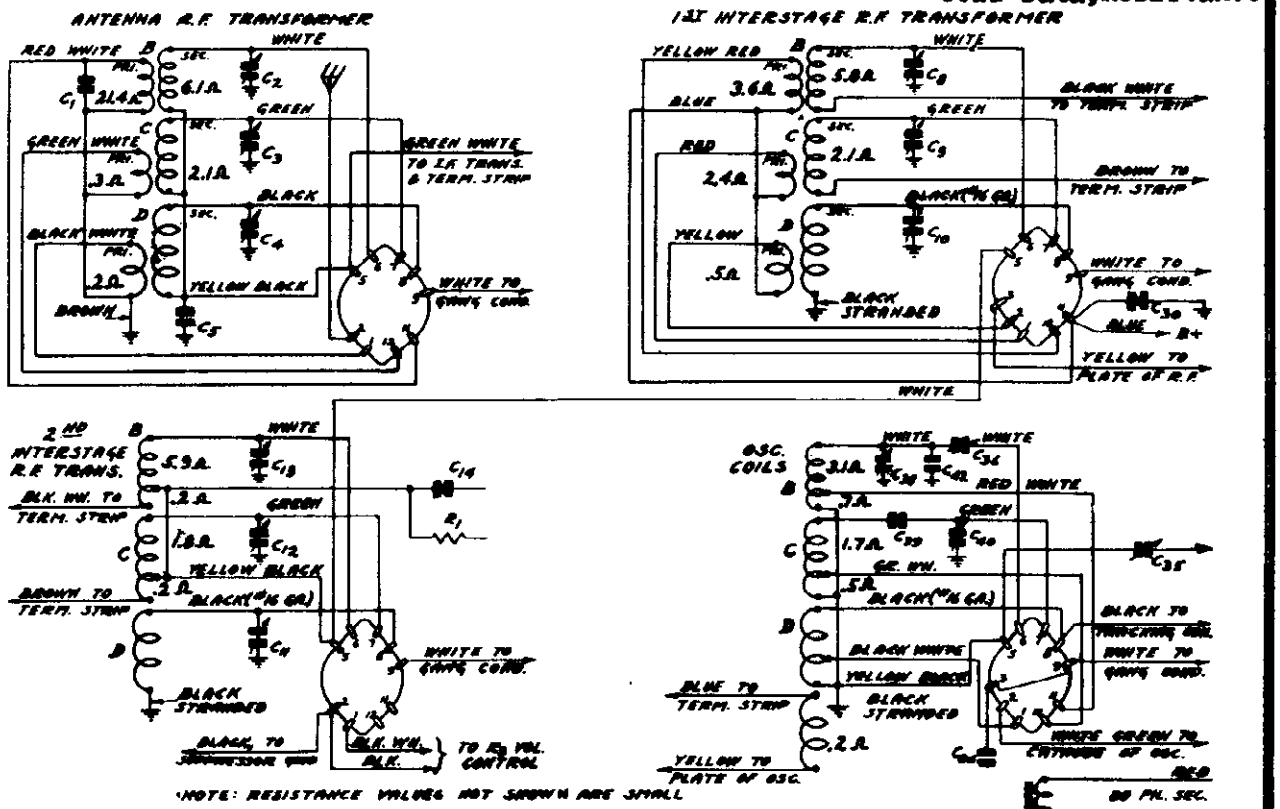

Fig. 4—Color Coding of Coil Wires and D. C. Resistance of Windings. (Also see complete D. C. Resistance List)

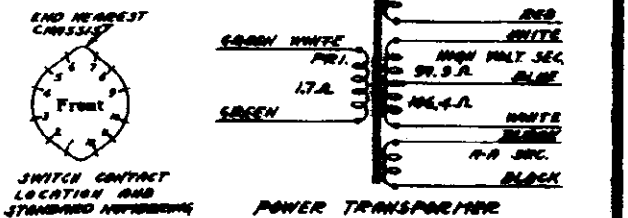

D. C. Resistance of Windings

Refer to Figs. 4 & 2

Following are the D. C. resistances of the various windings in the chassis. The values given below will vary slightly in different sets.

Part No.	Winding	Code	D. C. Resistance in Ohms
P-9A418	Antenna R. F. Transformer	T1	
	Range B Primary Winding		21.4
	Range C Primary Winding		0.5
	Range D Primary Winding		0.2
	Range B Secondary Winding		6.1
	Range C Secondary Winding		2.1
	Range D Secondary Winding		Small
P-9A411	1st Interstage R. F. Transformer	T2	
	Range B Primary Winding		3.6
	Range C Primary Winding		2.4
	Range D Primary Winding		0.5
	Range B Secondary Winding		5.8
	Range C Secondary Winding		2.1
	Range D Secondary Winding		Small
P-9A412	2nd Interstage R. F. Coils	T3	
	Range B Section		
	Long Portion		5.9
	Short Portion		0.2
	Range C Section		
	Long Portion		1.8
	Short Portion		0.2
	Range D Section		Small
P-9A413	1st I. F. Transformer	T4	
	Primary Winding		4.4
	Coupling Winding		0.3
	Secondary Winding		
	Tap to Condenser Side		2.3
	Tap to Switch Side		2.3
P-9A414	2nd I. F. Transformer	T5	
	Primary Winding		4.3
	Coupling Winding		0.3
	Secondary Winding		
	Tap to Condenser Side		2.3
	Tap to Switch Side		2.3
P-9A415	3rd I. F. Transformer	T6	
	Primary Winding		9.8
	Secondary Winding		30.0
P-50X24	Audio Input Transformer	T7	
	Primary Winding		415.0
	Secondary Winding		
	Center Tap to Inside		211.7
	Center Tap to Outside		208.5
P-51X26	Audio Output Transformer	T8	
	Primary Winding		
	Center Tap to Inside		135.5
	Center Tap to Outside		155.3
	Secondary Winding		
	Tap to Upper Side		0.16
	Tap to Ground Side		0.12
P-53X82	Power Transformer (115 Volt-60 Cycle)	T9	
	Primary Winding		1.7
	Tube Filament Secondary (A-A)		Small
	Tube Filament Secondary (B-B) (80)		Small
	High Voltage Secondary Winding		
	Center Tap to Inside		97.9
	Center Tap to Outside		106.4
P-9A427	Oscillator Coils	T10	
	Range B Grid Coil		
	Red White Tap to White		3.1
	Red White Tap to Ground		0.7
	Range C Grid Coil		
	Green White Tap to Green		1.7
	Green White Tap to Ground		0.5
	Range D Grid Coil		
	Black White Tap to Black		Small
	Black White Tap to Ground		Small
	Oscillator Plate Coil		0.2
P-9A400	2nd I. F. Plate Isolating Reactor	L1	34.7
P-12A226	12" Dynamic Speaker (No. 3—See Fig. 2)		
	Speaker Field	L2	1000.
	Voice Coil		Small
P-52X39	Reactor Assembly	L5	143.6
P-9A391	High Frequency Oscillator Tracking Coil	L6	1.0

©John F. Rider, Publisher

MODELS 62-192, 62-195
Alignment, Parts

MONTGOMERY-WARD & CO.

Alignment and Calibration

PRICES SUBJECT TO CHANGE WITHOUT NOTICE

Correct alignment is extremely important in connection with all wave receivers. The receivers are all properly aligned at the factory with precision instruments and realignment should not be attempted unless all other possible causes of the faulty operation have first been investigated and unless the service technician has the proper equipment.

A signal generator that will provide an accurately calibrated signal at 456, 1730, 1500, 600, 5800, 5000, 18,300, 15,000 and 6000 KC and an output indicating meter are required. It will be practically impossible to align the receiver if unsatisfactory apparatus is used. If a station is tuned in with the selectivity control in the broad position and this control is then turned to the sharp position, the station may disappear. This is not an indication that the receiver is out of alignment.

Use a non-metallic screwdriver for the adjustments.

The complete procedure is as follows:

I. F. Adjustment

Set the signal generator for a signal of 456 KC.

Connect the output of the signal generator to the grid of the 1st detector through a 0.1 MF condenser.

Connect the ground lead of the receiver to the ground post of the signal generator.

Turn the band selector to the Range B position (standard wave band—purple dial color).

Turn the selectivity control to the sharp position and keep it in this position for all adjustments.

Turn the volume control to the maximum position

Attenuate the signal from the signal generator to prevent the levelling-off action of the A.V.C.

Then adjust the five I.F. trimmers until maximum output is obtained. The adjusting screws for these condensers are reached from the top of the chassis, and the location is shown in Fig. 5.

Range B Alignment

1730 KC Adjustment

Set the signal generator for 1730 KC.

Turn the rotor of the tuning condenser to the full open position.

Keep the band selector in the standard wave position.

Connect the antenna lead of the receiver through a 200 mmf. condenser to the output of the signal generator.

For this and all subsequent adjustments keep the volume control at the maximum position and attenuate the signal from the signal generator to prevent A.V.C. action.

Adjust the oscillator Range B trimmer (C38) until maximum output is obtained. The location of this trimmer is shown in Fig. 3.

1500 KC Adjustment

Set the signal generator for 1500 KC.

Turn the rotor of the tuning condenser carefully until maximum output is obtained.

Loosen the pointer set screw and set the large pointer at the 1500 KC mark on the standard wave band scale. Retighten the set screw.

Adjust the 1st and 2nd interstage Range B trimmers (C8 and C13) and antenna Range B trimmer (C3) to maximum.

Do not change the setting of the oscillator Range B trimmer.

600 KC Adjustment

Set the signal generator for 600 KC.

Turn the tuning condenser rotor until maximum output is obtained.

Turn the rotor slowly back and forth at the same time adjusting the 600 KC trimmer until the peak of greatest intensity is obtained. See Fig. 3 for location of this trimmer.

Be sure to use a non-metallic screwdriver for this adjustment.

Range C Alignment

5800 KC Adjustment

Set the signal generator for 5800 KC.

Connect the antenna lead of the receiver through a 400 ohm resistor to the output of the signal generator.

Turn the rotor of the tuning condenser to the full open position.

Turn the band selector to the Range C position (1st short wave band—green dial color).

As mentioned above, keep the volume control at the maximum position and attenuate the signal from the signal generator to prevent A.V.C. action.

Adjust the oscillator Range C trimmer (C40) until maximum output is obtained. See Fig. 3 for location of this trimmer.

5000 KC Adjustment

Set the signal generator for 5000 KC.

Turn the rotor of the tuning condenser carefully until maximum output is obtained.

Adjust the 1st and 2nd interstage Range C trimmers (C9 and C12) and antenna Range C trimmer (C3) to maximum.

Do not change the setting of the oscillator Range C trimmer.

Range D Alignment

18,300 KC Adjustment

Set the signal generator for 18,300 KC.

Keep the antenna lead of the receiver connected through the 400 ohm resistor to the output of the signal generator.

Turn the rotor of the tuning condenser to the full open position.

Turn the band selector to the Range D position (2nd short wave band—red dial color).

As mentioned above, keep the volume control at the maximum position and attenuate the signal from the signal generator to prevent A.V.C. action.

Adjust the oscillator Range D trimmer (C41) until maximum output is obtained. See Fig. 3 for location of this trimmer.

15 000 KC Adjustment

Set the signal generator for 15,000 KC.

Turn the rotor of the tuning condenser carefully until maximum output is obtained.

Adjust the 1st and 2nd interstage Range D trimmers (C10 and C11) and antenna Range D trimmer (C4) to maximum.

When adjusting the 2nd interstage Range D trimmer, it will be necessary at the same time to turn the tuning condenser rotor slowly back and forth until the peak of greatest intensity is obtained.

Then go back and repeat the procedure as given for the 18,300 KC adjustment. If it is found necessary to make any appreciable change in the setting of the oscillator Range D trimmer, the 15,000 KC adjustment must be repeated.

Do not make any further change in the setting of the oscillator Range D trimmer.

6000 KC Adjustment

Set the signal generator for 6000 KC.

Turn the tuning condenser rotor until maximum output is obtained.

Turn the rotor slowly back and forth at the same time adjusting the 6000 KC trimmer until the peak of greatest intensity is obtained. See Fig. 3 for location of this trimmer.

Use a non-metallic screwdriver for this adjustment.

Twenty-five Cycle Receivers

The twenty-five cycle receiver differs from the sixty cycle receiver only in the fact that a different power transformer is used. The correct power transformer is shown in the parts list.

The twenty-five cycle receiver can be operated satisfactorily from a sixty cycle power supply. However, the reverse is not true, the sixty cycle receiver cannot be operated from a twenty-five cycle power supply.

A 115-230 Volt, 40 to 60 cycle as well as other power transformers with special power ratings are also available for this model.

Replacement Parts List

TRANSFORMERS AND COILS

Part No.	Code	Description	Selling Price
P-9A418	T1	Antenna R. F. Transformer Assembly	$1.45
P-9A451	T2	1st Interstage R. F. Transformer Assembly	1.20
P-9A412	T3	2nd Interstage R. F. Coil Assembly	1.30
P-9A413	T4	1st I. F. Transformer	1.60
P-9A414	T5	2nd I. F. Transformer	1.00
P-9A415	T6	3rd I. F. Transformer	1.00
P-9[illegible]	T7	Audio Input Transformer	1.20
P-9[illegible]	T8	Audio Output Transformer	1.25
P-9[illegible]	T9	Power Transformer—115 Volt 60 Cycle	3.95
P-9[illegible]	T9	Power Transformer—115 Volt 25 Cycle	4.20
P-9A427	T10	Oscillator Coil Assembly	1.30
P-9A408	L1	2nd I. F. Plate Isolating Resistor	.25
P-9[illegible]	L5	Filter Reactor	1.15
P-9A[illegible]	L6	High Frequency Osc. Tracking Coil Assem.	.12

NOTE: The R. F., Oscillator and I. F. Assemblies are sold complete with can.

RESISTORS

Part No.	Code	Resistance	Wat's	Type	Selling Price
P-A9525[illegible]	R1	25,000 Ohms	0.2	Carbon	$ .06
P-A9415[illegible]	R2	150 Ohms	0.2	Carbon	.06
P-30[illegible]	R3	2,500 Ohms		Dual V-Tone Control and Switch	.84
P-C9[illegible]	R4	30,000 Ohms	1.0	Carbon	.05
P-B9[illegible]	R5	60,000 Ohms	0.5	Carbon	.05
P-B9[illegible]	R6	100,000 Ohms	0.5	Carbon	.05
P-A9[illegible]	R7	900 Ohms	0.2	Carbon	.05
P-B9[illegible]	R8	200,000 Ohms	0.5	Carbon	.05
P-A9[illegible]	R9	100,000 Ohms	0.2	Carbon	.05
P-A9[illegible]	R10	100,000 Ohms	0.2	Carbon	.05
P-A9[illegible]	R11	2.0 Megohms	0.2	Carbon	.05
P-B9[illegible]	R13	300 Ohms	0.5	Carbon	.05
P-A9[illegible]	R14	250,000 Ohms	0.2	Carbon	.05
P-A9[illegible]	R15	250,000 Ohms	0.2	Carbon	.05
P-[illegible]	R16	1.0 Megohms		Tone Control	.35
P-A9[illegible]	R17	900,000 Ohms	0.2	Carbon	.05
P-4[illegible]	R18	120 Ohms	2.5	Armored Wire Wound	.35
	R19	140 Ohms	2.0		
	R20	7,800 Ohms	12.0	(Part of speaker assembly P-12A220)	
P-A9[illegible]	R21	80,000 Ohms	0.2	Carbon	.05
P-A9[illegible]	R22	2,500 Ohms	0.2	Carbon	.05
P-C9[illegible]	R23	27,000 Ohms	1.0	Carbon	.05

CONDENSERS

Part No.	Code	Capacity	Voltage	Type	Selling Price
P-[illegible]	C1	250 mmf.		Moulded	$ .05
P-17A36	C2	2-25 mmf.		Range B Antenna Trimmer	.05
P-17A36	C3	2-25 mmf.		Range C Antenna Trimmer	.05
P-17A36	C4	2-25 mmf.		Range D Antenna Trimmer	.05
P-[illegible]	C5	.05 mf.	180	Tubular	.08
P-[illegible]	C6	0.1 mf.	200	Tubular	.20
P-[illegible]	C7	0.25 mf.	180	Tubular	.14
P-17A36	C8	2-25 mmf.		Range B 1st Interstage Trimmer	.05
P-17A36	C9	2-25 mmf.		Range C 1st Interstage Trimmer	.05
P-17A36	C10	2-25 mmf.		Range D 1st Interstage Trimmer	.05
P-17A36	C11	2-25 mmf.		Range B 2nd Interstage Trimmer	.05
P-17A36	C12	2-25 mmf.		Range C 2nd Interstage Trimmer	.05
P-17A36	C13	2-25 mmf.		Range D 2nd Interstage Trimmer	.05
P-[illegible]	C14	0.05 mf.	180	Tubular	.08
P-17A30	C15	150-250 mmf.		1st I. F. Trimmer Condensers	.22
	C16	150-250 mmf.			
	C17	150-250 mmf.		2nd I. F. Trimmer Condensers	
P-17A30	C18	150-250 mmf.			
P-17A40	C19	70-130 mmf.		3rd I. F. Primary Trimmer	.14
P-[illegible]	C20	50 mmf.		Moulded	.05
P-[illegible]	C21	0.05 mf.	180	Tubular	.08
P-[illegible]	C22	0.05 mf.	350	Tubular	.10
P-[illegible]	C23	0.10 mf.	350	Tubular	.10
P-[illegible]	C24	0.01 mf.	400	Tubular	.08
P-[illegible]	C25	0.05 mf.	600	Tubular	.10
P-[illegible]	C26	0.25 mf.	180	Tubular	.12
P-[illegible]	C27	0.006 mf.	600	Tubular	.08
P-[illegible]	C28	126 mf.	45	Wet Electrolytic	.54
P-[illegible]	C29	30-40 mf.	200	Wet Electrolytic	.52
P-[illegible]	C30	0.25 mf.	350	Tubular	.16
P-[illegible]	C31	20.0 mf.	450	Wet Electrolytic	.70
P-[illegible]	C32	0.15 mf.	200	AC Tubular	.20
P-[illegible]	C33	0.05 mf.	180	Tubular	.08
P-[illegible]	C34	35 mmf.		Moulded	.05
P-17A35	C35	40-100 mmf.	6000 KC	Padding Condenser	.32
	C36	200-600 mmf.	600 KC	Padding Condenser	
P-[illegible]	C37	0.25 mf.	300	Tubular	.14
P-17A41	C38	2-25 mmf.		Oscillator Range B Trimmer	.05
P-17A41	C41	2-25 mmf.		Oscillator Range D Trimmer	.05
P-[illegible]	C39	1400 mmf.		Moulded	.14
P-17A36	C40	2-25 mmf.		Oscillator Range C Trimmer	.05
P-[illegible]	C42	10 mmf.		Moulded	.08
P-25A39		4 Section Gang Condenser and Drive Assembly—Less Dial Assembly			4.18

DIAL AND DRIVE ASSEMBLY

Part No.	Description	Selling Price
P-3A37	Gang Condenser Bracket and Bearing	$ .22
P-[illegible]	Drive Shaft	.08
P-[illegible]	Drive Pulley with set screw	.06
P-[illegible]	Main Shaft and Pointer Stud	.04
P-[illegible]	Gear (Rotary)	.04
P-[illegible]	Gear (Stationary)	.04
P-[illegible]	Spreader Spring	.04
P-[illegible]	Main Pointer Shaft Assembly	.22
P-[illegible]	Micrometer Pointer Shaft Assembly	.26
P-[illegible]	Compound Gear Assembly	.12
P-[illegible]	Tension Pulley Arm Assembly	.08
P-[illegible]	Tension Pulley Spring Only	.04
P-[illegible]	Drive Belt	.10
P-[illegible]	Small Pointers	.04
P-[illegible]	Torsion Spring	.04
P-[illegible]	11" Black Drive Cord, Dozen	.10
P-[illegible]	Brass Collars & Set Screws (for mounting above cord to shaft)	.04
P-[illegible]	Dial Clamp to secure Dial Strip to frame (with 4-32x3/16" mounting screw)	.06
P-[illegible]	Dial Strip Only	.20
P-[illegible]	Double End Pointer	.06
P-[illegible]	Micrometer Pointer	.06
P-7A[illegible]	Pilot Lamp Bulb (6-8V)	.08
P-7A[illegible]	Pilot Lamp Sockets & Spring Clips	.08

NOTE: The Gang Condenser and Drive Assembly, less Dial Assembly, can be purchased complete—see Condenser List.

MISCELLANEOUS

Part No.	Description	Selling Price
P-3A210	Type 6F6 Tube Socket (7 Prong) Metal Tube	$ .08
P-3A211	Type 6R7 Tube Socket (7 Prong) Metal Tube	.08
P-3A[illegible]	Type 80 Tube Socket (4 Prong) Glass Tube	.04
P-3A126	Type 76 Tube Socket (5 Prong) Glass Tube	.05
P-3A[illegible]	5 Prong Speaker Socket	.05
P-3A[illegible]	6 Prong Speaker Socket	.05
P-3[illegible]	Tube Shield (1/4 Osc. & 1st A. F.)	.08
P-[illegible]	Tube Shield (1/8 2nd Det.)	.06
P-[illegible]	Tube Shield Base for above Shields	.04
P-12A[illegible]	12" Dynamic Speaker—6 Prong Plug (No. 3, Fig. 2)	4.75
P-10A[illegible]	"Tone" Control Knob; Small Push-on Type	.08
P-10A[illegible]	"Volume" Control Knob; Small Push-on Type	.08
P-10A[illegible]	"Station Selector" Knob; Large Set Screw Type	.10
P-10A[illegible]	"Band Selector" Knob; Large Set Screw Type	.10
P-10A[illegible]	Selectivity Control Knob; Special Set Screw Type	.23
P-17X[illegible]	Glass Crystal	.10
P-[illegible]	Crystal Retaining Ring	.04
P-[illegible]	Band Change Switch	1.20
P-[illegible]	Selectivity Control Switch	.22
P-[illegible]	Grid Clip Only—for Metal Tubes	.04
P-[illegible]	Rubber Chassis Mounting Cushions	.08
P-[illegible]	Single Lug Terminal Strip (Mtg. hole used)	.04
P-4A[illegible]	Two Lug Terminal Strip (Mtg. Foot in center—Ground Lug extended)	.04
P-4A53	Three Lug Terminal Strip (All Lugs insulated)	.04
P-4A17	Single Lug Terminal Strip (Mtg. Foot Used)	.04
P-17X214	Antenna & Ground Lead Assembly	.14
P-11X[illegible]	Line Cord & Plug	.28

PHONO ATTACHMENT PARTS

Part No.	Description	Selling Price
P-8A[illegible]	Phono Switch. (Double Pole Double Throw Switch)	.20
P-3A[illegible]	Phono Jack	.06
P-[illegible]	Switch Knob	.10
P-4A[illegible]	Terminal Strip	.04
	10 Inches of No. 866G Shielded Sleeving (5/16" Dia.)	.10

©John F. Rider, Publisher

MONTGOMERY-WARD & CO.

MODEL 62-197
Trimmers, Voltage
Socket, Chassis View

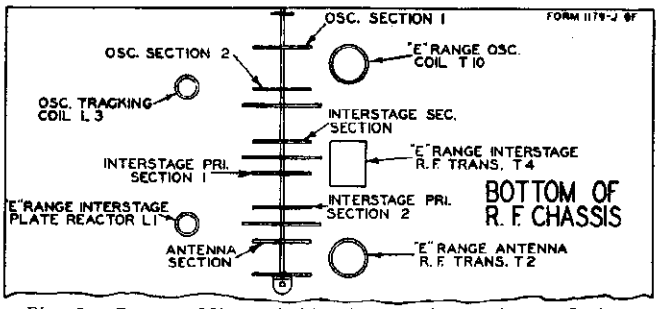

Fig. 5—Bottom View of Chassis Showing Coil and Switch Section Location

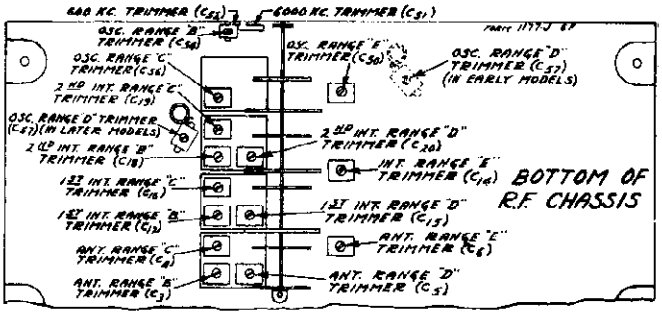

Fig. 6—Trimmer Location

VOLTAGES AT SOCKETS

Antenna Shorted to Ground - Line Voltage 110
Volume Control Maximum

Tube	Function	Across Heater	Plate to Ground	Screen to Ground	Cathode to Ground	Cathode M. A.
6K7	R. F.	5.8	300	110	4.1	10.5
6K7	1st Det.	5.8	300	142	10.0	3.5
76	Osc.	5.8	142			10.0
6K7	1st I. F.	5.8	300	110	4.1	10.5
6K7	2nd I. F.	5.8	300	110	3.7	10.0
6B7	Sig. Diode & Audio Amp.	5.8(1) 5.6(2)	300	115	3.6	4.5
6F7	Bass Amp.	5.8(1) 5.6(2)	275(3) 125(4)	115	7.2	9.0
76	A.V.C. Diode	4.9				
76	A.V.C. Amp.	4.9	0		-62.0	
2A3	Power	2.35	300		60(5)	60.0(6)
5Z3	'B' Rect.	4.8				375.0(7)
45	Bias Rect.	2.4				

(1) Measured with A. C. Voltmeter—early models with letter "A" under chassis.
(2) Measured with D. C. Voltmeter—later models with letter "B" under chassis.
(3) Pentode Plate
(4) Triode Plate
(5) Control Grid to ground.
(6) Each Side of push-pull Circuit—120 Ma. total for 4 tubes.
(7) Total for both tubes—Milliameter in series with 1st Choke.

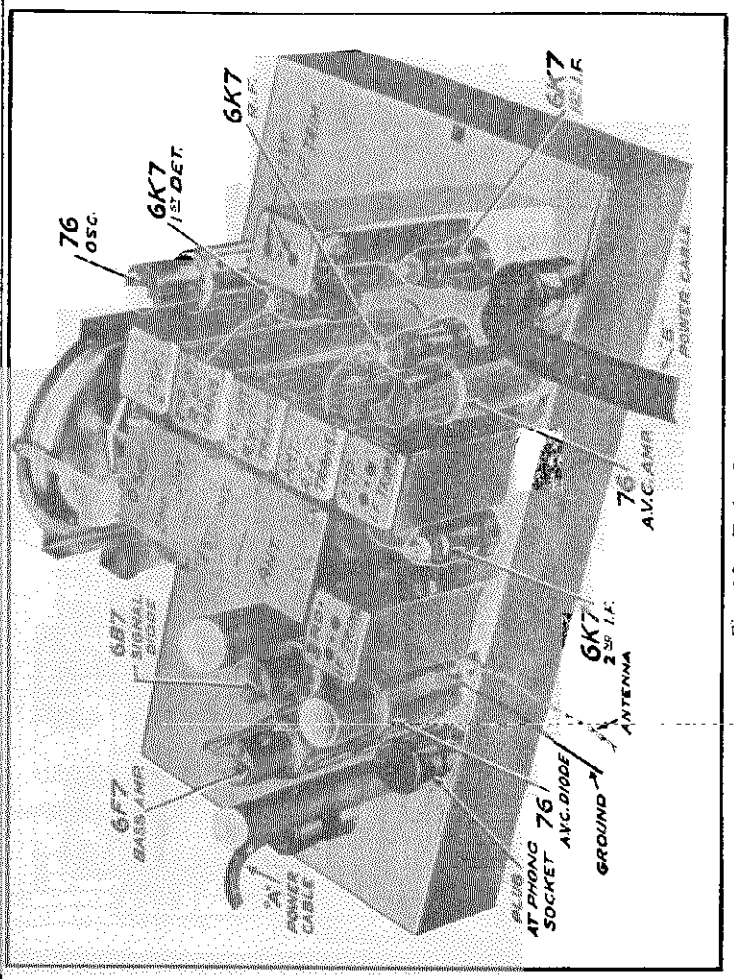

Fig. 10—Tube Arrangement in R.F. Chassis

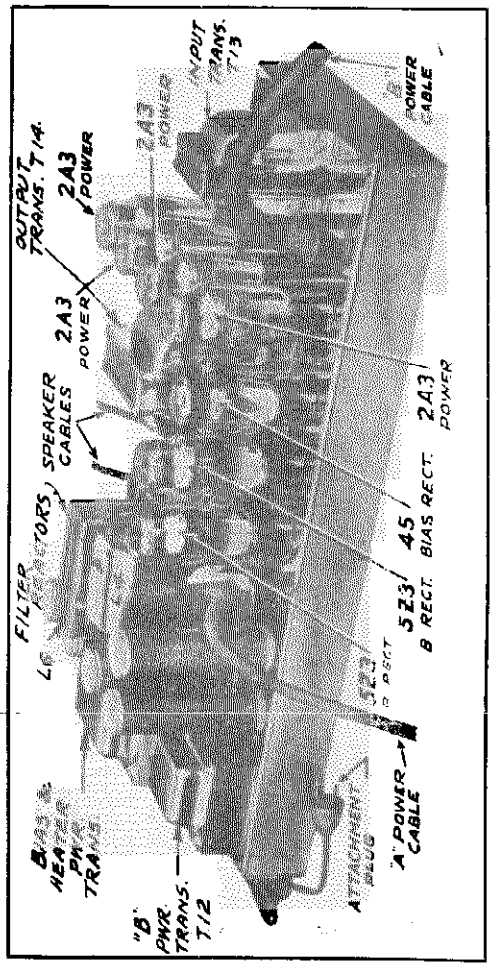

Fig. 11—Tube Arrangement

©John F. Rider, Publisher

©John F. Rider, Publisher

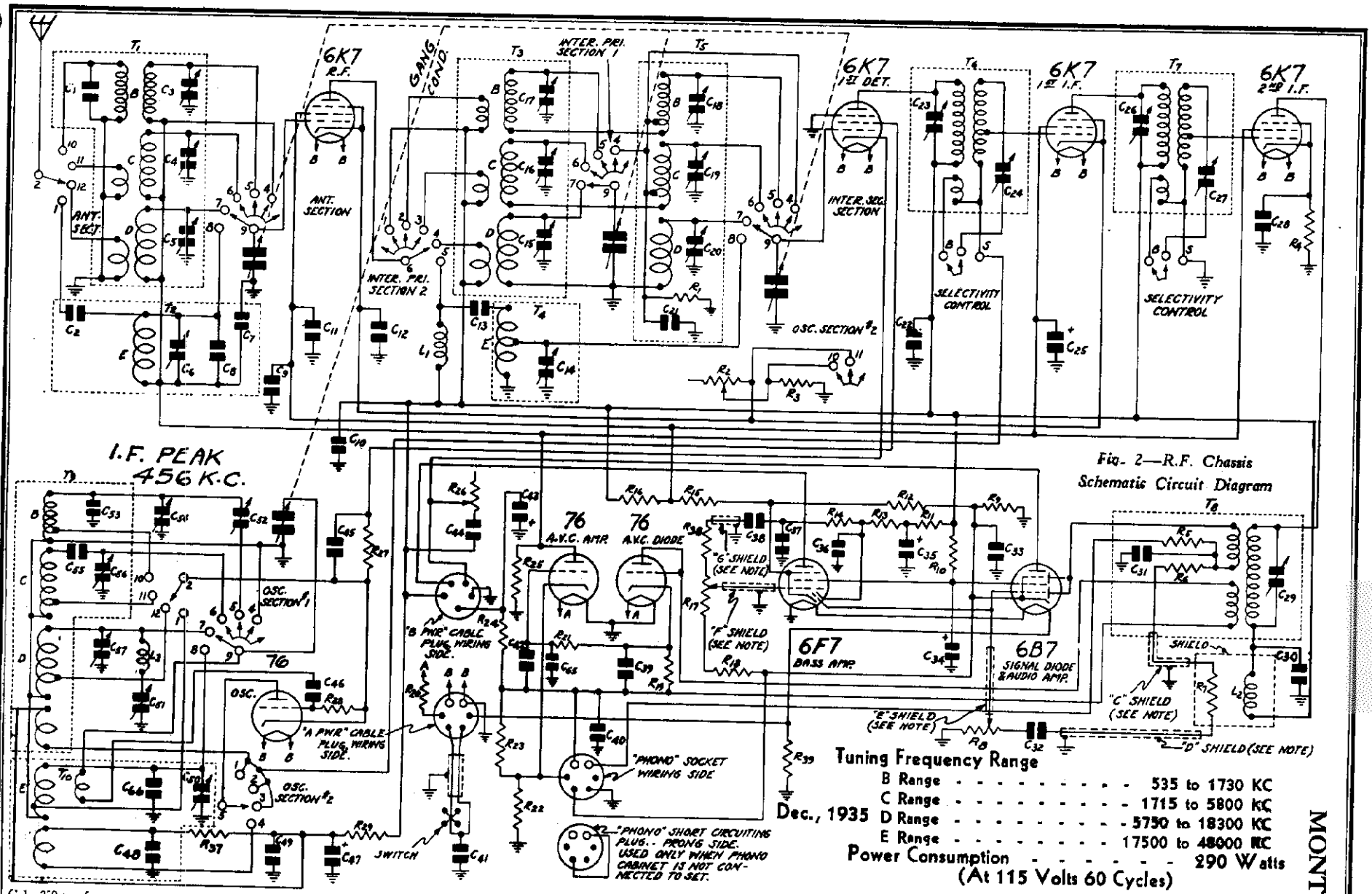

Fig. 2—R.F. Chassis Schematic Circuit Diagram

Tuning Frequency Range

B Range	535 to 1730 KC
C Range	1715 to 5800 KC
D Range	5750 to 18300 KC
E Range	17500 to 48000 KC

Power Consumption - - - - - - - - 290 Watts
(At 115 Volts 60 Cycles)

Power Output - - - - **30 Watts Undistorted**

C 1	250 mmf.	C26	150-250 mmf. } Dual
C 2	35 mmf.	C27	150-250 mmf. }
C 3	2-25 mmf.	C28	.05 mf. 180 V.
C 4	2-25 mmf.	C29	70-150 mmf.
C 5	2-25 mmf.	C30	.10 mf. 480 V.
C 6	2-25 mmf.	C31	50.0 mmf.
C 7	.05 mf. 180 V.	C32	.01 mf. 360 V.
C 8	35 mmf.		
C56	2-25 mmf.		
C57	2-25 mmf.		
C58	60 mf. 150 V. Electrolytic		
C59	.63 mf. 180 V.		
C60	.35 mf. 280 V.		
C61	30. mf. 400 V.		

R 1	25,000 ohm 0.2 watt	R30	50,000 ohm 0.2 watt
R 3	150 ohm 0.2 watt	R31	2,000 ohm 0.2 watt
R 4	500 ohm 0.2 watt	R32	2,000 ohm 0.2 watt
R 5	100,000 ohm 0.2 watt	R33	200,000 ohm 0.2 watt
R 6	100,000 ohm 0.2 watt	R34	200,000 ohm 0.2 watt
R 7	100,000 ohm 0.2 watt	R35	2,000 ohm 0.2 watt
R10	60,000 ohm 1.0 watt		

T 1	Ant. R.F. Trans.	T13	P-P Input Trans.
T 2	"E" Range Ant. R.F. Trans.	T14	P-P Output Trans.
T 3	1st Interstage R.F. Trans.	B 1	Block Cond. and 10 KC Filter

Dec., 1935

MONTGOMERY

C13	.05 mf. 480 V.	C38	.005 mf. 360 V	C47	4.0 mf. 250 V.	R20	2.0 ohm 1.0 watt armored wire wound
C14	2-25 mmf.	C39	100 mmf.	C52	300-600 mmf.	R21	2.0 megohm 0.2 watt
C15	2-25 mmf.	C40	.50 mf. 180 V.	C51	40-100 mmf.	R22	160,000 ohm 0.2 watt
C16	2-25 mmf.					R23	25,000 ohm 0.2 watt
C17	2-25 mmf.	C41	.02 mf. 600 V.	C63	30. mf. 400 V. Electrolytic	R24	25,000 ohm 0.2 watt
C18	2-25 mmf.	C42	.05 mf. 180 V.			R25	500,000 ohm 0.2 watt
C19	2-25 mmf.	C44	.01 mf. 360 V.	C64	30. mf. 400 V Electrolytic	R26	1.0 megohm Tone Control
C20	2-25 mmf.	C45	.05 mf. 180 V.				
		C46	35 mmf.	C65	500 mmf.	R27	2,500 ohm 0.2 watt
C21	.05 mf. 180 V.	C48	.05 mf. 360 V.	C66	20 mmf.	R28	30,000 ohm 0.2 watt
C22	.25 mf. 480 V.	C49	.10 mf. 360 V.	C67	.70 mf. 280 V (Block)	R29	15,000 ohm 3.0 watt
C23	150-250 mmf.	C50	2-25 mmf.				
C24	150-250 mmf.	C53	10 mmf.	C68	.70 mf. 280 V. (Block)		
C25	60.0 mf. Electrolytic	C54	2-25 mmf.				
		C55	1400 mmf.				

R 8	2.0 megohm	Control	
R 9	1.0 megohm		
R12	60 ohm	Armored Wire Wound	
R15	2,500 ohm		
R16	4,000 ohm		
R39	130 ohm 2.5 watt armored wire wound		

T 8	3rd I.F. Trans.
T 9	Osc. Inductors
T10	"E" Range Osc. Inductor
T11	Bias and Heater Power Trans.
T12	"B" Power Trans.

L 5	Filter Reactor
L 6	Filter Reactor
L 7	Speaker Field 4500 ohm
L 8	Speaker Field 4500 ohm

LOCATION AND STANDARD NUMBERING

Fig. 9—Numbering of Switch Contacts

ARROWS INDICATE CONNECTIONS PRESENT IN BAND SW. WHEN IN POS. SHOWN.

	POSITION 1 STANDARD WAVE (B)	POSITION 2 SHORT WAVE (C)	POSITION 3 SHORT WAVE (D)	POSITION 4 SHORT WAVE (E)
OSC. SECT. 1 & ANT. SECT.	10 11 12 1 2 4 5 6 7 8 9	10 11 12 1 2 4 5 6 7 8 9	10 11 12 1 2 4 5 6 7 8 9	10 11 12 1 2 4 5 6 7 8 9
OSC. SECT. 2	10 11 1 2 3 4 5	10 11 1 2 3 4 5	10 11 1 2 3 4 5	10 11 1 2 3 4 5
INTER. SEC. SECTION	4 5 6 7 8 9	4 5 6 7 8 9	4 5 6 7 8 9	4 5 6 7 8 9
INTER. PRI. SECT. 2	1 2 3 4 5 6	1 2 3 4 5 6	1 2 3 4 5 6	1 2 3 4 5 6
INTER. PRI. SECT. 1	4 5 6 7 9	4 5 6 7 9	4 5 6 7 9	4 5 6 7 9

IN ALL SECT. CONTACT LOCATIONS NOT NUMBERED ARE BLANK EXCEPT CONTACT LOCATION 3 IN OSC. SECT. 1 WHICH IS USED AS A WIRING TERMINAL.

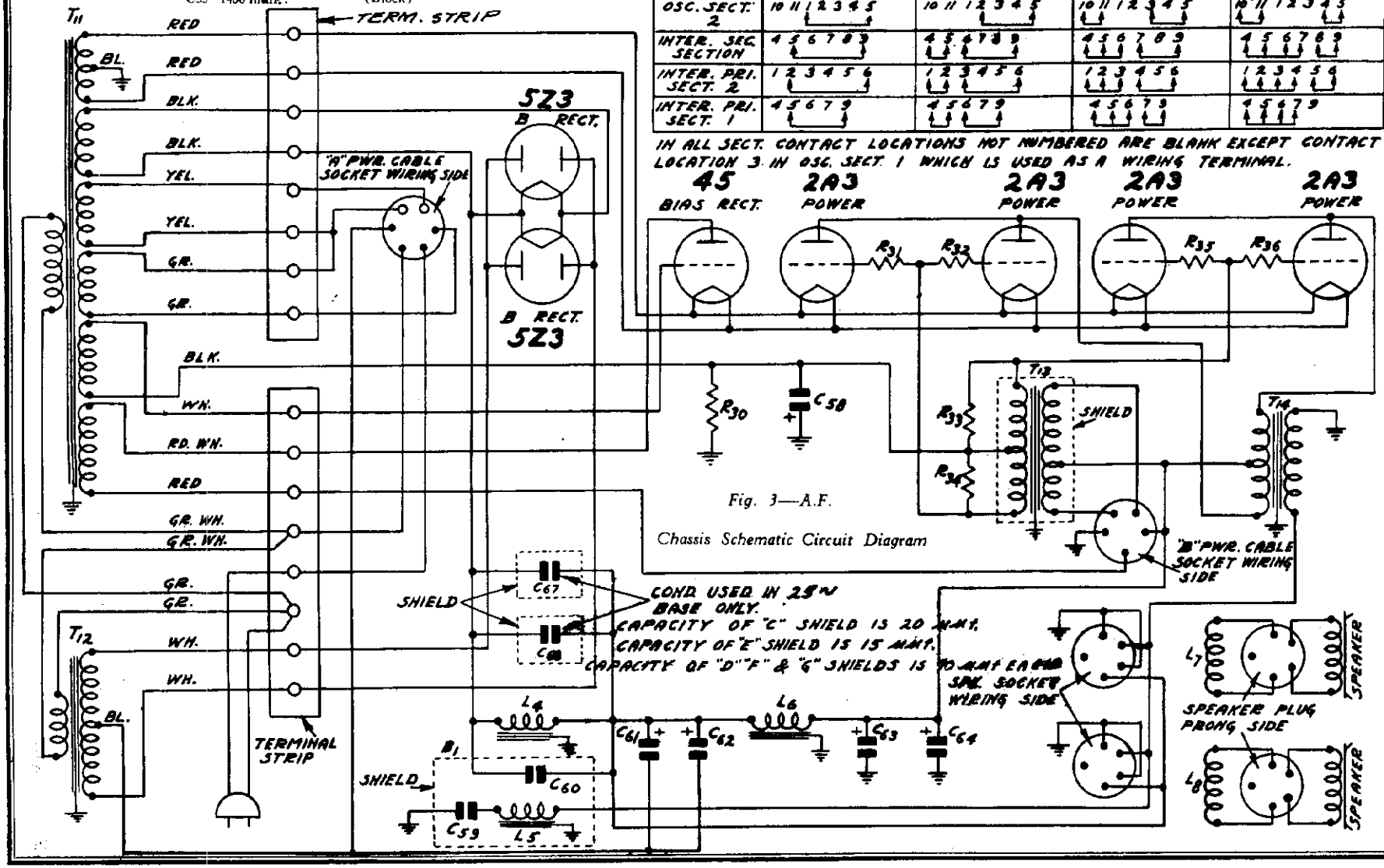

Fig. 3—A.F. Chassis Schematic Circuit Diagram

MODEL 62-197
Alignment, Phono.
Changes

MONTGOMERY-WARD & CO.

Alignment and Calibration

I. F. Adjustment

Set the signal generator for a signal of 456 KC.

Connect the output of the signal generator to the grid of the 1st detector through a 0.1 mf. condenser.

Connect the ground lead of the receiver to the ground post of the signal generator.

Turn the band selector to the Range B position (standard wave band purple dial color).

Turn the selectivity control to the sharp position and keep it in this position for all adjustments.

Turn the volume control to the maximum position.

Attenuate the signal from the signal generator to prevent the levelling-off action of the A.V.C.

Then adjust the five I.F. trimmers until maximum output is obtained. The adjusting screws for these condensers are reached from the top of the chassis, and the location is shown in Fig. 4.

Range B Alignment

1730 KC Adjustment

Set the signal generator for 1730 KC.

Turn the rotor of the tuning condenser to the full open position.

Keep the band selector in the standard wave position.

Connect the antenna lead of the receiver through a 200 mmf. condenser to the output of the signal generator.

For this and all subsequent adjustments keep the volume control at the maximum position and attenuate the signal from the signal generator to prevent A.V.C. action.

Adjust the oscillator Range B trimmer (C54) until maximum output is obtained. The location of this trimmer is shown in Fig. 6.

1500 KC Adjustment

Set the signal generator for 1500 KC.

Turn the rotor of the tuning condenser carefully until maximum output is obtained.

Loosen the pointer set screw and set the large pointer at the 1500 KC mark on the standard wave band scale. Re-tighten the set screw.

Adjust the 1st and 2nd interstage Range B trimmers (C17 and C18) and antenna Range B trimmer (C3) to maximum.

Do not change the setting of the oscillator Range B trimmer.

600 KC Adjustment

Set the signal generator for 600 KC.

Turn the tuning condenser rotor until maximum output is obtained.

Turn the rotor slowly back and forth at the same time adjusting the 600 KC trimmer until the peak of greatest intensity is obtained. See Fig. 6 for location of this trimmer.

Be sure to use a non-metallic screwdriver for this adjustment.

Range C Alignment

5800 KC Adjustment

Set the signal generator for 5800 KC.

Connect the antenna lead of the receiver through a 400 ohm resistor to the output of the signal generator.

Turn the rotor of the tuning condenser to the full open position.

Turn the band selector to the Range C position (1st short wave band—green dial color).

As mentioned above, keep the volume control at the maximum position and attenuate the signal from the signal generator to prevent A.V.C. action.

Adjust the oscillator Range C trimmer (C56) until maximum output is obtained. See Fig. 6 for location of this trimmer.

5000 KC Adjustment

Set the signal generator for 5000 KC.

Turn the rotor of the tuning condenser carefully until maximum output is obtained.

Adjust the 1st and 2nd interstage Range C trimmers (C16 and C19) and antenna Range C trimmer (C4) to maximum.

Do not change the setting of the oscillator Range C trimmer.

Range D Alignment

18,300 KC Adjustment

Set the signal generator for 18,300 KC.

Keep the antenna lead of the receiver connected through the 400 ohm resistor to the output of the signal generator.

Turn the rotor of the tuning condenser to the full open position.

Turn the band selector to the Range D position (2nd short wave band—red dial color).

As mentioned above, keep the volume control at the maximum position and attenuate the signal from the signal generator to prevent A.V.C. action.

Adjust the oscillator Range D trimmer (C57) until maximum output is obtained. See Fig. 6 for location of this trimmer.

15,000 KC Adjustment

Set the signal generator for 15,000 KC. Turn the rotor of the tuning condenser carefully until maximum output is obtained.

Adjust the 1st and 2nd interstage Range D trimmers (C15 and C20) and antenna Range D trimmer (C5) to maximum.

When adjusting the 2nd interstage Range D trimmer, it will be necessary at the same time to turn the tuning condenser rotor slowly back and forth until the peak of greatest intensity is obtained.

Then go back and repeat the procedure as given for the 18,300 KC adjustment. If it is found necessary to make any appreciable change in the setting of the oscillator Range D trimmer, the 15,000 KC adjustment must be repeated.

Do not make any further change in the setting of the oscillator Range D trimmer.

6000 KC Adjustment

Set the signal generator for 6000 KC.

Turn the tuning condenser rotor until maximum output is obtained.

Turn the rotor slowly back and forth at the same time adjusting the 6000 KC trimmer until the peak of greatest intensity is obtained. See Fig 6 for location of this trimmer.

Use a non-metallic screwdriver for this adjustment.

Range E Alignment

48,000 KC Adjustment

Set the signal generator for 48,000 KC.

Keep the antenna lead of the receiver connected through the 400 ohm resistor to the output of the signal generator.

Turn the rotor of the tuning condenser to the full open position.

Turn the band selector to the Range E position (3rd short wave band - brown dial color).

Adjust the oscillator Range E trimmer (C58) until maximum output is obtained. See Fig. 6 for location of this trimmer.

40,000 KC Adjustment

Set the signal generator for 40,000 KC.

Turn the rotor of the tuning condenser carefully until maximum output is obtained.

Adjust the interstage Range E trimmer (C14) and antenna Range E trimmer (C6) to maximum.

Do not change the setting of the oscillator Range E trimmer.

Twenty-five Cycle Receivers

The twenty-five cycle receiver differs from the sixty cycle receiver in the fact that special twenty-five cycle filament and "B" power transformers must be used. It also has two additional condensers in the power unit--C67 and C68 as illustrated in Fig. 3. The twenty-five cycle transformers and the condensers are shown in the parts list.

The twenty-five cycle receiver can be operated satisfactorily from a sixty cycle power supply if the two condensers C67 and C68 are removed. However, the reverse is not true, that is, a sixty cycle receiver cannot be operated from a twenty-five cycle power supply.

115-230 Volt, 40 to 60 cycle filament and "B" power transformers are also available for this model.

Changes in Early Models

In the early models condenser C65, shown in the R.F. Schematic Fig. 2, was not used. A 20 mmf. condenser, also designated as C65, was connected in parallel with condenser C14.

Condenser C10 from B+ to ground was not used in early models. Another condenser in the early models, also designated as C10 and 250 mmf. in value, was connected from the A.V.C. amplifier plate to ground.

Resistor R38 was not used in early models.

On the A.F. chassis the speaker sockets were wired with ground to the opposite side of voice coil.

A phonograph socket is provided on the R.F. chassis by means of which phonograph connections can be made without electrical changes in the chassis. The receiver is shipped from the factory with a plug in this socket. If no phonograph is used this plug must be inserted as it completes the signal diode circuit for radio reception.

Two sets of accessories are supplied for phonograph connections for this model. One set is used when the phonograph is contained in a separate cabinet, and the other set is used when the phonograph and radio are in a combination cabinet. The electrical connections are the same in both cases and are illustrated in Fig. 13 (A). Parts required in either case are shown in the parts list in this manual.

Phonograph in Separate Cabinet

For this assembly, a 5 conductor cable and a small metal panel assembly are supplied. This assembly has the radio-phono switch, tip jacks for pick-up leads and terminal plate for phono cable.

The phono panel is mounted at the most convenient place in the cabinet at which connections can be completed. The switch is secured to the motor board as illustrated in Fig. 14.

The socket at the end of the cable is secured to the terminal plate on the panel and the plug at the other end of the cable is inserted into the phono socket on the R.F. chassis.

When the switch is thrown to the radio side, the phono pick-up is excluded from the signal diode circuit. When it is thrown to the phono side, the signal diode circuit is opened and the phonograph connections completed to this circuit. Resistor R23 is short circuited. This brings the grid and cathode of the 76 A.V.C. amplifier to the same potential and causes a plate current in this tube of sufficient intensity to bring the R.F. and 1st I.F. tubes to the point of cut off (See article on circuit for further information regarding operation of A.V.C. system).

Phonograph and Radio in Combination Cabinet

For this assembly, a number of separate items as shown in the parts list are supplied. The phono short circuiting plug supplied with the receiver is used after certain changes have been made.

First take off the shell of this plug by twisting the shell in either direction. The shell is then drilled and equipped with a rubber grommet as shown in Fig. 13 (B). Next unsolder and remove the jumper wire from the plug as shown in Fig. 13 (A). Extend the leads through the hole in the shell and solder the leads to the prongs on the plug as illustrated. Complete the connections to the switch and tip jacks as shown. The switch is mounted on the motor board and the tip jacks at the nearest convenient place.

The description of the connections as given for the separate phonograph cabinet also applies to the combination.

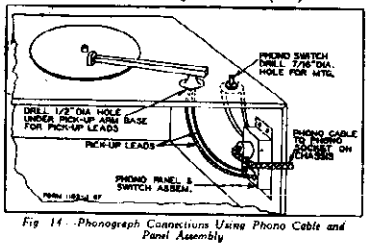

Fig. 14—Phonograph Connections Using Phono Cable and Panel Assembly

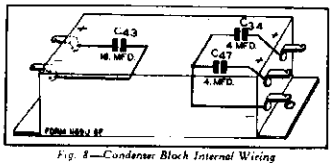

Fig. 8—Condenser Block Internal Wiring

Phonograph Connections

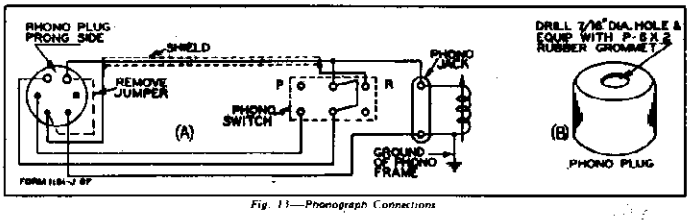

Fig. 13—Phonograph Connections

©John F. Rider, Publisher

D. C. Resistance of Windings
Refer to Figs. 12, 2 & 3.

Following are the D. C. resistances of the various windings in the chassis. The values given below will vary slightly in different sets.

Part No.	Winding	Code	D. C. Resistance in Ohms
P-9A428	Antenna R.F. Transformer	T1	
	Range B Primary Winding		22.8
	Range C Primary Winding		0.35
	Range D Primary Winding		0.2
	Range B Secondary Winding		6.1
	Range C Secondary Winding		1.8
	Range D Secondary Winding		Small
P-9A435	"E" Range Antenna R.F. Coil	T2	Small
P-9A429	1st Interstage R.F. Transformer	T3	
	Range B Primary Winding		3.7
	Range C Primary Winding		2.5
	Range D Primary Winding		0.5
	Range B Secondary Winding		5.8
	Range C Secondary Winding		1.8
	Range D Secondary Winding		Small
P-9A436	"E" Range Interstage R.F. Coil	T4	
	Tap to either side		Small
P-9A430	2nd Interstage R.F. Coils	T5	
	Range B Section		
	Long Portion		5.6
	Short Portion		0.2
	Range C Section		
	Long Portion		1.9
	Short Portion		0.2
	Range D Section		Small
P-9A432	1st I.F. Transformer	T6	
	Primary Winding		4.4
	Coupling Winding		0.3
	Secondary Winding		
	Tap to Condenser Side		3.0
	Tap to Switch Side		1.3
P-9A433	2nd I.F. Transformer	T7	
	Primary Winding		4.4
	Coupling Winding		0.3
	Secondary Winding		
	Tap to Condenser Side		3.0
	Tap to Switch Side		1.3
P-9A434	3rd I.F. Transformer	T8	
	Primary Winding (Yellow to Blue)		9.7
	Signal Diode Secondary		12.4
	A.V.C. Secondary (Brown to Green)		7.0
P-9A431	Oscillator Coils	T9	
	Range B Grid Coil		
	Red-White tap to White		3.0
	Red-White tap to Black-Yellow		0.8
	Range C Grid Coil		
	Green-White tap to Green		1.7
	Green-White tap to Black-Yellow		0.5
	Range D Grid Coil		
	Black-White tap to Black		Small
	Black-White tap to Black-Yellow		Small
	Oscillator Range D Plate Coil		0.2
P-9A437	"E" Range Oscillator Coils	T10	
	Range E Grid Coil		Small
	Range E Plate Coil		.4
	Range E Series Grid Coil		Small
P-53X88	Filament Transformer (115 Volts 60 Cycles)	T11	
	Primary Winding		4.4
	Filament Transformer Secondaries, below		
	Red to Red		Small
	Black to Black		Small
	Yellow to Yellow		Small
	Green to Green		Small
	Black to White		22.8
	Red-White to Red		32.9

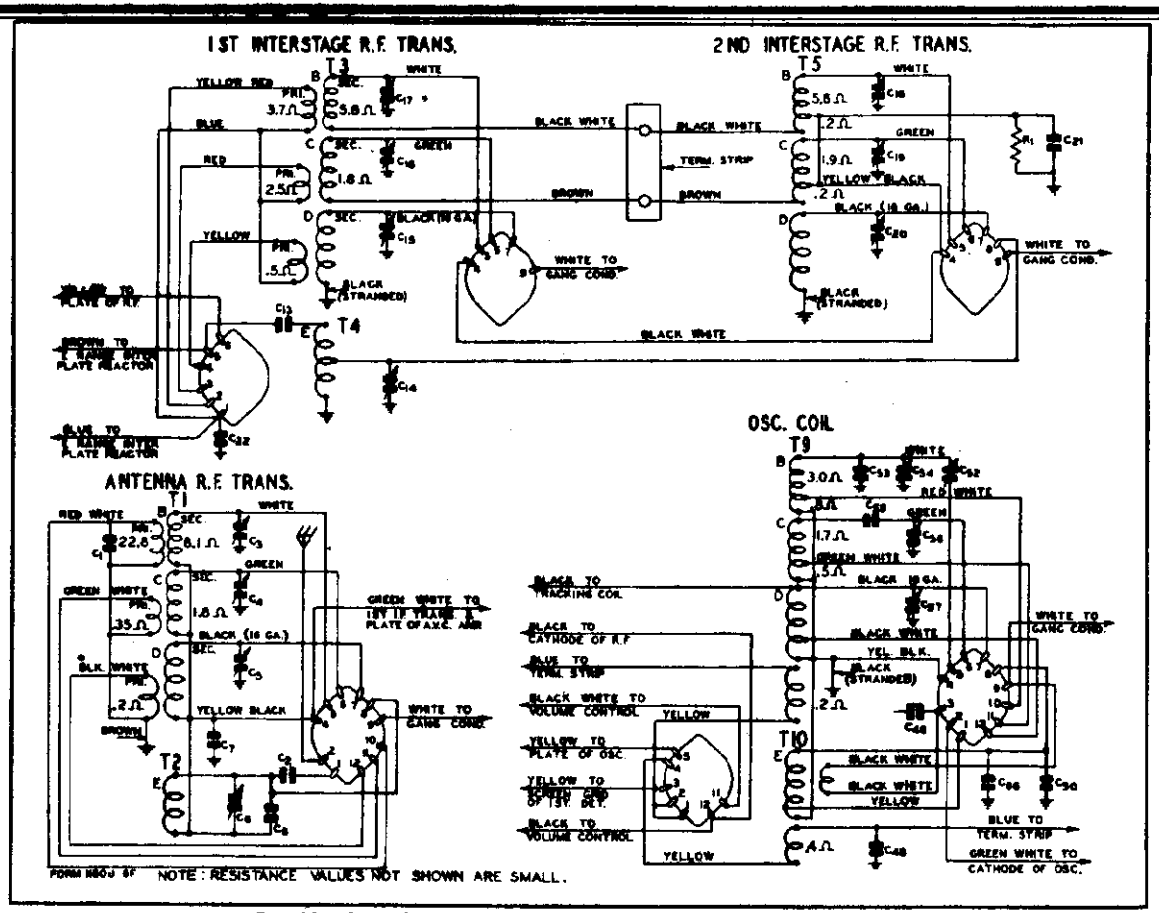

Fig. 12—Color Coding of Coil Wires and D. C. Resistances of Windings

Part No.	Winding	Code	D. C. Resistance in Ohms
P-53X85	"B" Power Transformer (115 Volts 60 Cycles)	T12	
	Primary Winding		1.9
	Secondary Winding		
	Center Tap to Inside		48.0
	Center Tap to Outside		53.1
P-50X25	Audio Input Transformer	T13	
	Primary Winding		
	Tap to Plate of 6F7		6600.
	Tap to Tone Control and Plate of 6B7		4650.
	Secondary Winding		
	Center Tap to Inside		2840.
	Center Tap to Outside		3260.
P-51X33	Audio Output Transformer	T14	
	Primary Winding		
	Center Tap to Inside		19.7
	Center Tap to Outside		22.4

Part No.	Winding	Code	D. C. Resistance in Ohms
P-12A206	12" Dynamic Speaker		
	Speaker Voice Coil		6.3
	Speaker Field	L7	4500.
P-12A213	12" Dynamic Speaker		
	Speaker Voice Coil		6.3
	Speaker Field	L8	4500.
P-9A391	"E" Range Interstage Plate Reactor	L1	1.0
P-9A450	2nd I.F. Plate Isolating Reactor	L2	35.0
P-9A391	High Frequency Oscillator Tracking Coil	L3	1.0
P-52X35	Filter Reactor	L4	51.6
P-52X36	Filter Reactor	L6	11.2
P-48X201	Block Condenser & 10 KC Reactor Assembly	B1	
	10 KC Reactor	L5	0.6

MODELS 62-169,62-171
Schematic,Socket
Trimmers,Voltage
Alignment

MONTGOMERY-WARD & CO.

TOP VIEW

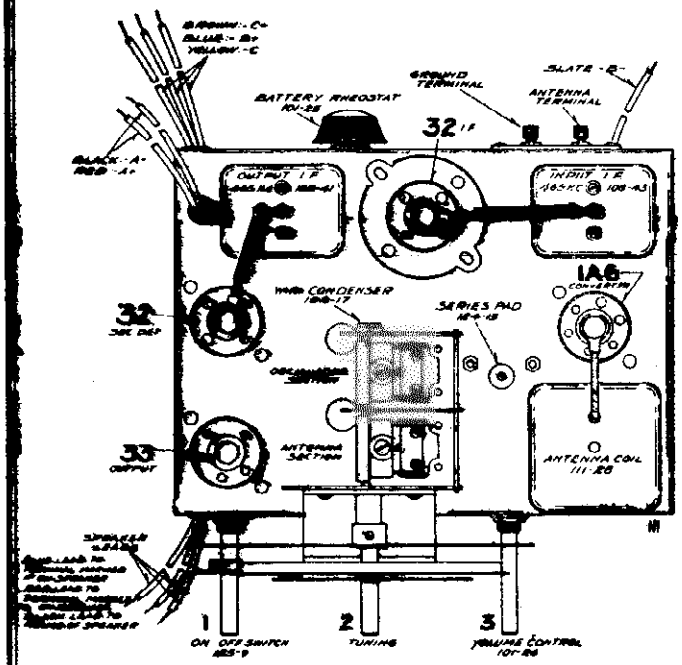

BROADCAST BAND ALIGNMENT:

1. Set external oscillator to 1720 K.C. and connect it in series with a 200 mmfd. condenser to the antenna and ground posts.
   (a) With variable condenser in its minimum capacity position, plates entirely out of mesh, adjust oscillator trimmer (rear section of variable condenser) to resonance.
   (b) Re-set external oscillator to 1400 K.C. Rotate variable condenser, pick up signal and adjust antenna trimmer (front section of variable condenser) to resonance.
   (c) Re-set external oscillator to 600 K.C., move dial pointer to 600 K.C., and adjust series pad, part number 124-13 (see top view), to resonance. While making this adjustment, slowly rock variable condenser to and fro until maximum output is obtained.
   (d) Check for sensitivity at 600, 1000, 1200 K.C. DO NOT BEND PLATES.

ALIGNING I.F. TRANSFORMERS: (465 K.C.)

1. With volume control full on and with variable condenser at its minimum capacity position, plates entirely out of mesh, and with external oscillator set at 465 K.C. connected in series with a .1 mfd. condenser, to the grid of the 1A6 tube (cap at top of tube), adjust I.F. transformers, parts number 108-41 and 108-43, to resonance. Both of these transformers have two (2) adjustments each, they are accessible from the tops of the cans (for location see top view).

IF PEAK 465 KC.

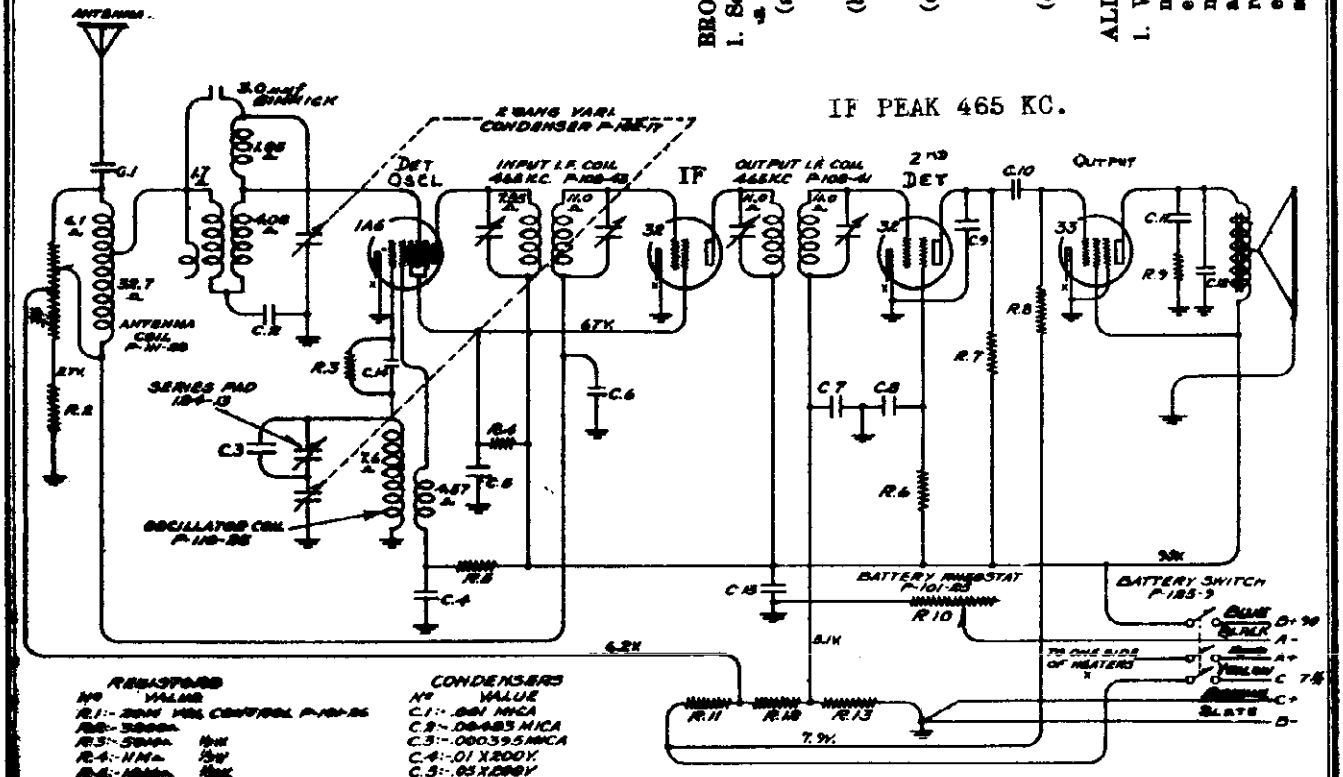

RESISTORS			CONDENSERS	
No	VALUE		No	VALUE
R.1	20M VOL CONTROL P-101-26		C.1	.001 MICA
R.2	3000		C.2	.00483 MICA
R.3	50	1W	C.3	.000395 MICA
R.4	1M	½W	C.4	.01 X 200V.
R.5	150	1W	C.5	.05 X 200V
R.6	3	1W	C.6	.25 X 200V
R.7	75	1W	C.7	.05 X 200V
R.8	600	1W	C.8	.01 X 200V
R.9	350	1W	C.9	.00035 MICA
R.10	4m BIAS RHEOSTAT P-101-25		C.10	.01 X 400V
R.11	13		C.11	.01 X 400V
R.12	75		C.12	.0003 MICA
R.13	300	1W	C.13	.25 X 200V
			C.14	.00035 MICA

- NOTE -
R. 2, R.11, R.12 ARE IN ONE UNIT. P-106-21
C.4, C.5 ARE IN ONE UNIT P-118-11
C.6, C.13 " " " " P-118-5
C.7, C.8 " " " " P-118-11
NUMBERS PREFIXED BY LETTER 'P' ARE PART NOS.
ALL VOLTAGES INDICATED ARE WITH NEW BATTERIES.
VOLUME CONTROL ON FULL

MONTGOMERY-WARD & CO.

MODEL 62-702
Schematic
Alignment

Power Consumption - - 6.5 Amperes at 6.3 Volts
Power Output - - - - - 3 Watts Undistorted
Sensitivity - - - - - - 1.0 Microvolt Absolute
Selectivity - - 45 KC Broad at 1000 Times Signal

Tuning Frequency Range - 530-1650 KC
Intermediate Frequency - - - 175 KC
Speaker - - - - - - - 6 Inch Dynamic

Sept., 1935

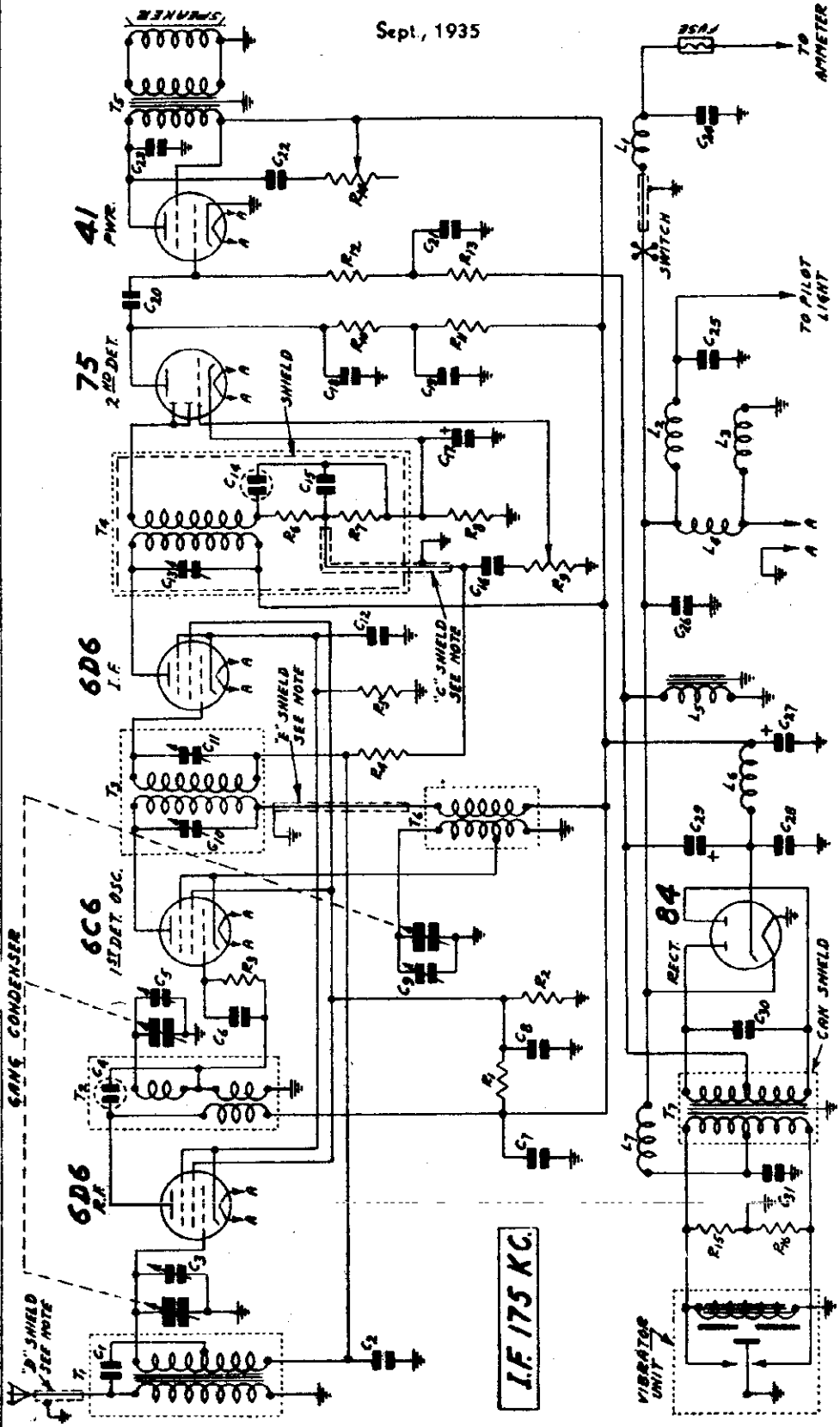

GROUPS OF CIRCUIT ELEMENTS ENCLOSED IN DOTTED RECTANGLES COMPRISE DISTINCT MECHANICAL ASSEMBLIES. CIRCUIT ELEMENTS ENCLOSED IN DOTTED CIRCLES DO NOT EXIST AS DISTINCT UNITS BUT OCCUR AS A RESULT OF THE MUTUAL POSITION OF OTHER THE CAPACITY OF "C" SHIELD IS 37 MMF, THE CAPACITY OF "D" SHIELD IS 85 MMF AND THE CAPACITY OF "E" SHIELD IS 15 MMF.

C1 21 mmf.
C2 .05 mf. 180 V.
C3 Gang Trimmer
C4 40 mmf.
C5 Gang Trimmer
C6 35 mmf.
C7 .10 mf. 360 V.
C8 .10 mf. 180 V.
C9 Gang Trimmer } One
C10 70-150 mmf. } Unit
C11 70-150 mmf.
C12 .10 mf. 180 V.
C13 70-150 mmf.
C14 250 mmf.
C15 250 mmf.
C16 .01 mf. 360 V.
C18 250 mmf.
C19 .10 mf. 360 V.
C20 .01 mf. 360 V.
C21 .25 mf. 180 V.
C22 .04 mf. 600 V.
C23 .006 mf. 600 V.
C24 .50 mf. 180 V.
C25 2000 mmf.
C26 2000 mmf.
C27 .01 mf. 360 V.
C28 .0075 mf. 600 V.
C29 .50 mf. 180 V.
C30 4.0 mf. 25 V. } Electrolytic Block
C31 5.0 mf. 350 V. } Electrolytic Block
C32 8.0 mf. 350 V. } Electrolytic Block

R1 17000 ohm 1.0 W.
R2 20000 ohm ohm .5 W.
R3 .50 Megohm .2 W.
R4 1.0 Megohm .2 W.
R5 350 ohm .2 W.
R6 50000 ohm .2 W.
R7 500000 ohm .2 W.
R8 6000 ohm .2 W.
R9 2.0 Megohm Volume Control
R10 15000 ohm .2 W.
R11 50000 ohm .2 W.
R12 .50 Megohm .2 W.
R13 100000 ohm .2 W.
R14 150000 ohm Tone Control
R15 50 ohm .5 W.
R16 50 ohm .5 W.

T1 Antenna Trans.
T2 R.F. Interstage Trans.
T3 1st I.F. Trans.
T4 2nd I.F. Trans.
T5 Output Trans.
T6 Osc. Inductor
T7 Power Trans.

L1 Motor Noise Reactor
L2 Pilot Light Reactor
L3 Speaker Field 4.3
L4 Filament Reactor
L5 Filter Choke
L6 "B" Reactor
L7 Vibrator Reactor

ALIGNMENT: Align IF at 175 KC.

Adjust trimmers of Osc. section of gang condenser at 1650 KC.
Adjust trimmers of 1st. Det. and Ant. at 1400 KC.

© John F. Rider Publisher

MODEL 62-202
Voltage, Resistance
Socket, Trimmers
Coil Data

MONTGOMERY-WARD & CO.

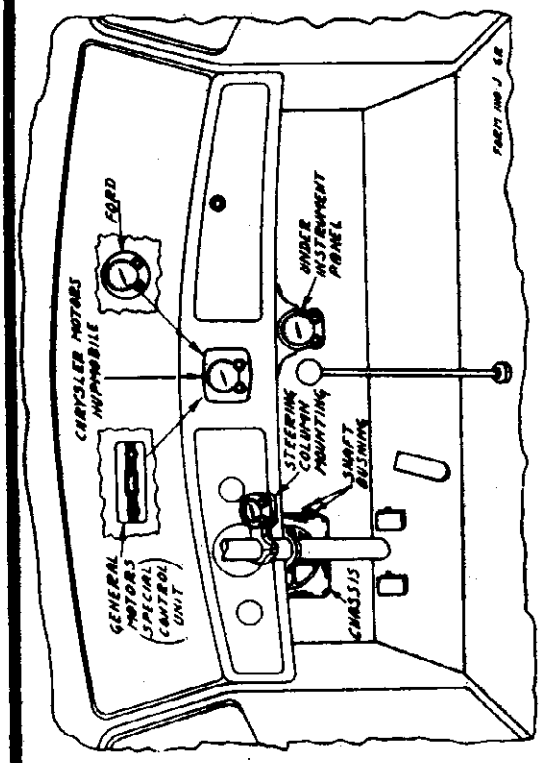

Fig. 5—Various Control Unit Mountings

VOLTAGES AT SOCKETS

Antenna Disconnected Battery 6 Volts Under Load

Type of Tube	Function	Across Heater	Plate to Ground	Screen to Ground	Cathode to Ground	Cathode Current M. A.
6D6	R. F. Amp.	5.8	220	90	4.5	6.3
6C6	1st Det. Osc.	5.8	220	90	0	2.4
6D6	I. F. Amp.	5.8	220	90	4.5	6.3
75	2nd Det.	5.8	130(1)		1.2	0.3
41	Power	5.8	210	220	16(2)	25
84	Rectifier	5.8				50.0

(1) With 250,000 Ohm Meter
(2) As read across filter choke.

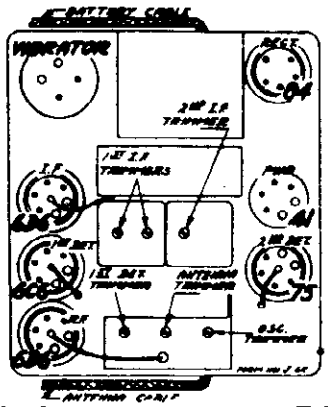

Fig. 2—Location of Tubes and Trimmers

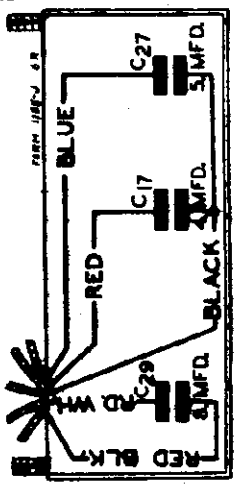

Fig. 4—Condenser Block—Internal Wiring

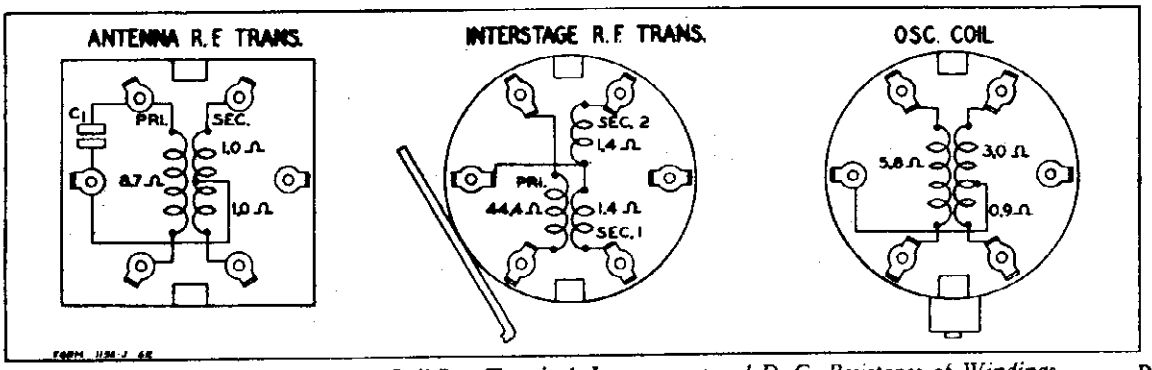

Fig. 3—R. F. and Oscillator Coil Base Terminal Arrangement and D. C. Resistance of Windings

D. C. Resistance of Windings

Following are the D. C. resistances of the various windings in the chassis. The values given below will vary slightly in different sets.

Part No.	Winding	Code	D. C. Resistance in Ohms
P-9A443	Antenna Transformer	T1	
	Primary Winding		8.7
	Secondary Winding—Either Portion		1.0
P-9A439	Interstage Transformer	T2	
	Primary Winding		44.4
	Secondary Winding—Either Portion		1.4
P-9A441	1st I. F. Transformer	T3	
	Primary Winding		93.5
	Secondary Winding		97.6
P-9A442	2nd I. F. Transformer	T4	
	Primary Winding		44.1
	Secondary Winding		49.6
P-12A227	Dynamic Speaker		
	Output Transformer Primary	T5	416.6
	Output Transformer Secondary	T5	Small
	Speaker Field	L3	5.3
	Speaker Voice Coil		Small
P-9A440	Oscillator Coils	T6	
	Grid Coil		
	Long Portion		3.0
	Short Portion		0.9
	Plate Coil		5.8
P-53X108	Power Transformer	T7	
	Primary Winding		
	Center Tap to Inside		Small
	Center Tap to Outside		Small
	Secondary Winding		
	Center Tap to Inside		200.
	Center Tap to Outside		200.
P-9A444	Motor Noise Reactor	L1	Small
P-9A448	Pilot Light Line Reactor	L2	Small
P-9A446	Filament Reactor	L4	Small
P-52X42	Filter Choke	L5	312.5
P-9A447	R. F. "B" Plate Reactor	L6	4.1
P-9A445	Vibrator Filter Reactor	L7	Small

©John F. Rider, Publisher

MODELS 62-207, 62-20
62-221

MONTGOMERY-WARD & CO.

Schematic

Input Voltages

"A" Battery	2 Volts (0.74 Amperes)
"B" Batteries	135 Volts
"C" Batteries	4½, 9 and 16½ Volts
Power Output	1.5 Watts Undistorted
Selectivity-20 KC Broad at 1000 times Signal (Sharp)	
Intermediate Frequency	456 KC.
Speaker	8" Permanent Magnet Dynamic

Tuning Frequency Range

B Range	535 to 1730 KC.
C Range	1680 to 4800 KC.
D Range	5650 to 16000 KC.

Sensitivity

B Range Average	1.0 Microvolts Absolute
C Range Average	4.0 Microvolts Absolute
D Range Average	7.0 Microvolts Absolute

Nov., 1935

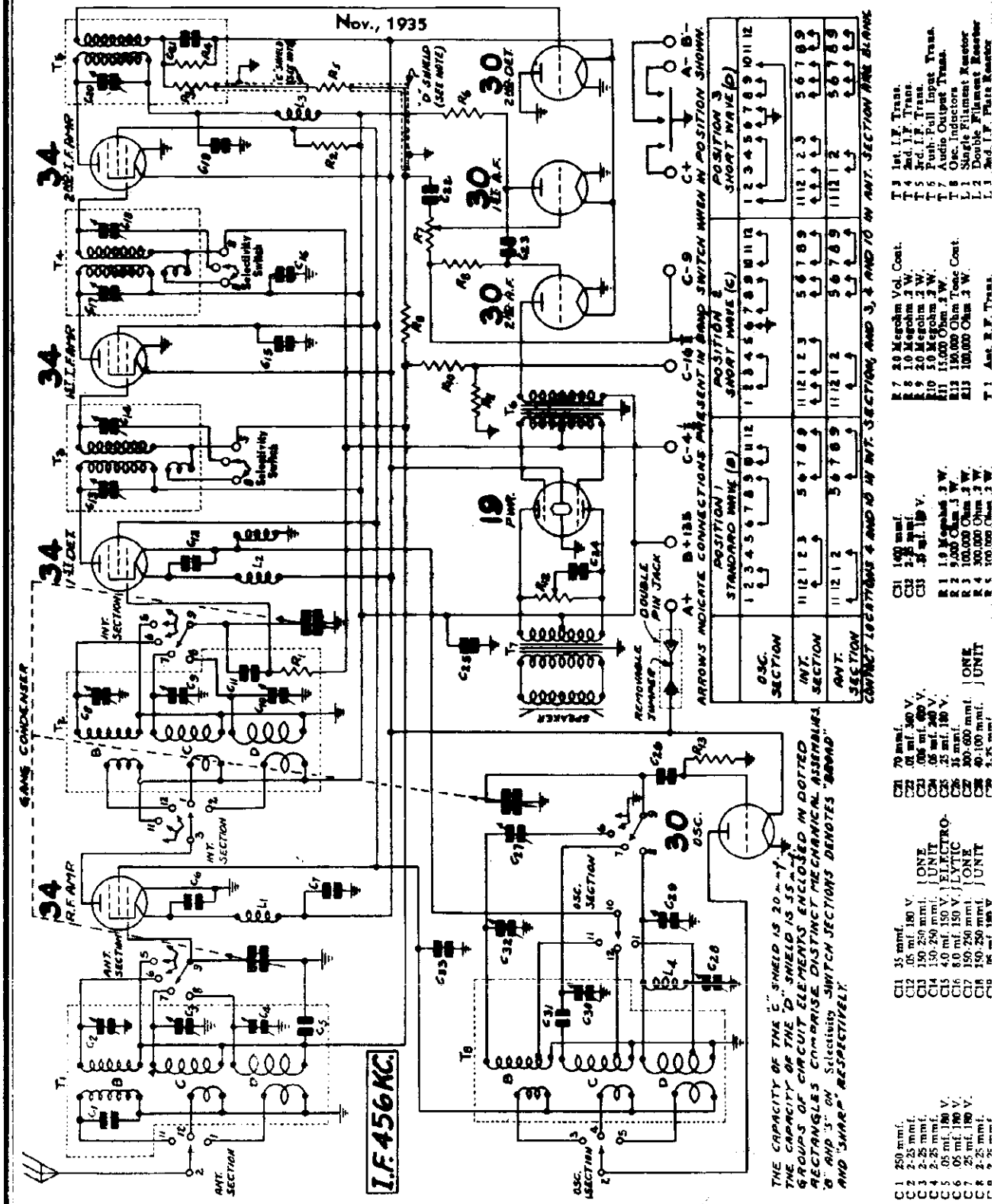

MODELS 62-207, 62-209
62-221
Voltage, Socket, Trimmers
Battery Data

MONTGOMERY-WARD & CO.

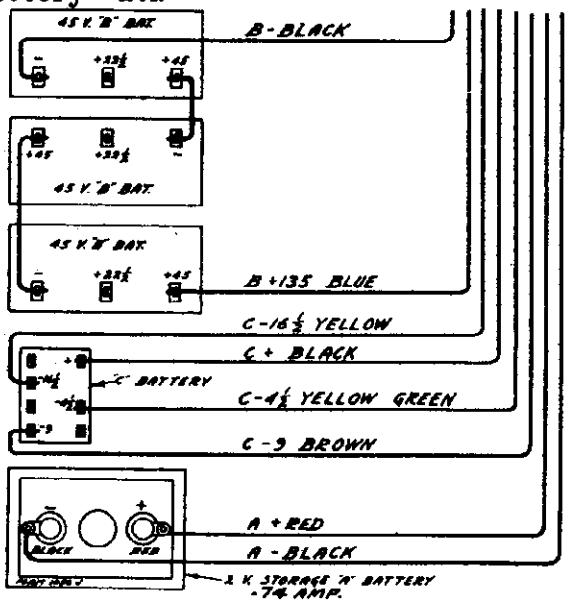

Fig. 3—Complete Battery Wiring Connections

VOLTAGES AT SOCKETS
Antenna Shorted to Ground

Type of Tube	Function	Across Filament	Plate to Ground	Screen to Ground	Control Grid to Ground	Normal Plate M. A.
34	R. F.	2.0	135	80	4.7(1)	2.4
34	1st. Det.	2.0	135	80	4.5(2)	2.2
30	Oscillator	2.0	80			3.4
34	1st I. F.	2.0	135	80	4.7(1)	2.4
34	2nd I. F.	2.0	135	80	4.5	2.2
30	2nd Det.	2.0				
30	1st Audio	2.0	90		9.0(3)	0.17
30	2nd Audio	2.0	132		9.0(4)	2.5
19	Power	2.0	135		4.5	1.5 (per plate)

(1) Computed figure—cannot be read with ordinary voltmeter.
(2) As read at 4½ volt tap on "C" battery.
(3) Volume Control at minimum.
(4) As read at 9 volt tap on "C" battery.

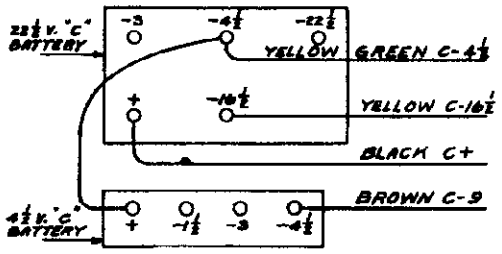

Fig. 4—"C" Battery Connections

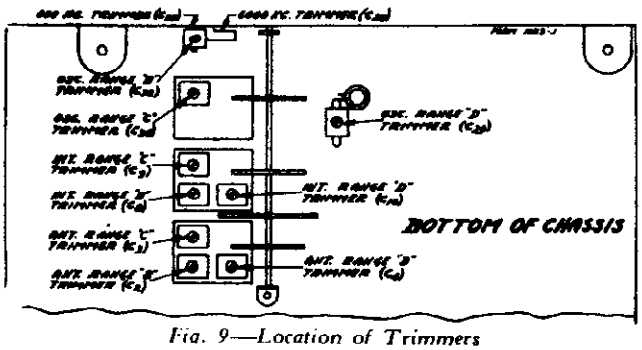

Fig. 9—Location of Trimmers

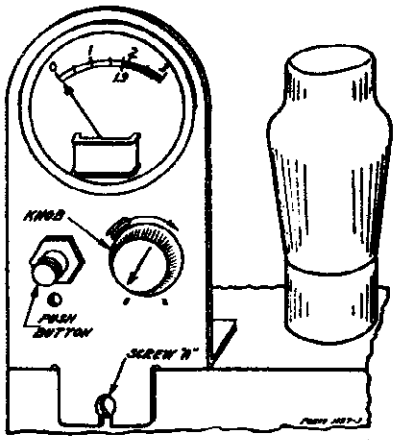

Fig. 5—Voltage Regulator in Position

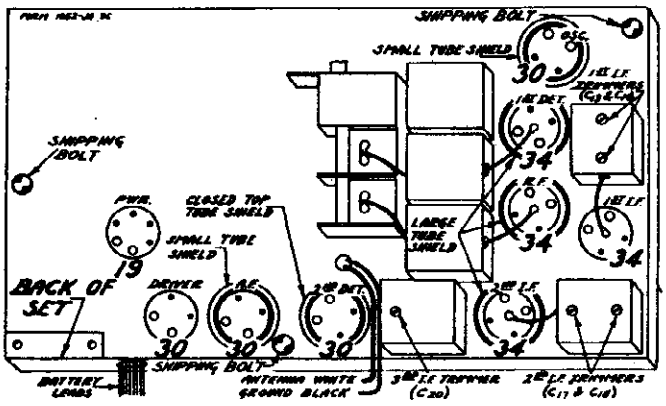

Fig. 11—Location of Tubes

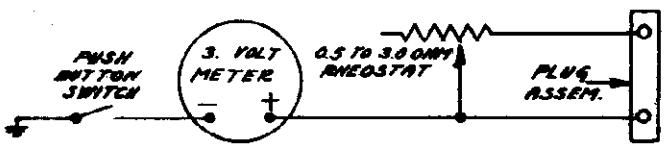

Fig. 6—Schematic Diagram of Voltage Regulator

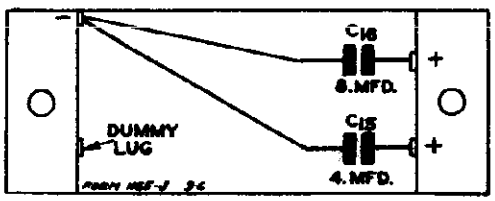

Fig. 12—Condenser Block—Internal Wiring

©John F. Rider, Publisher

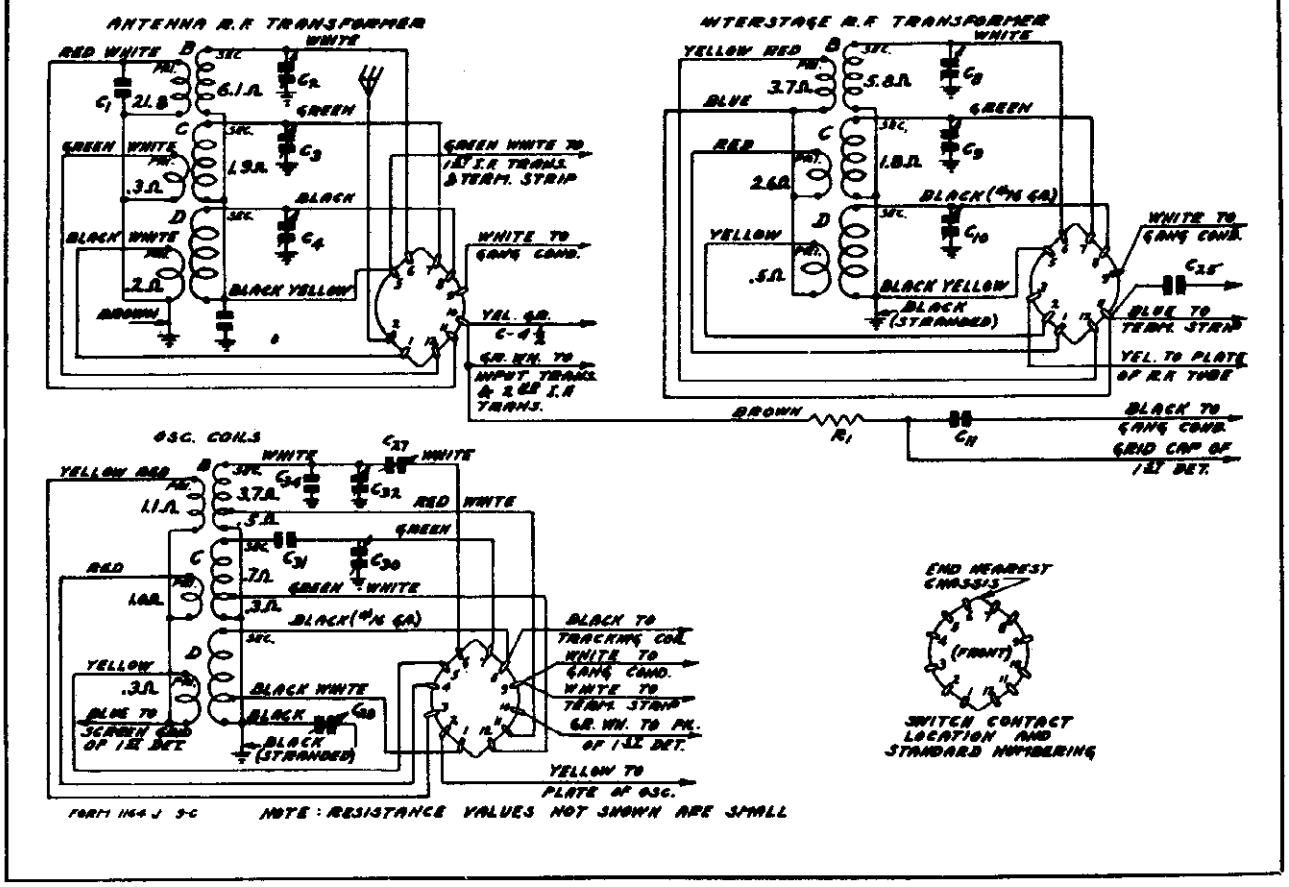

Fig. 10—Color Coding of Coil Wires and D. C. Resistance of Windings. (Also See Complete D. C. Resistance List Below)

D. C. Resistance of Windings
Refer to Figs. 10 & 2

Following are the D. C. resistances of the various coil windings in the chassis. The values given below will vary slightly in different sets.

Part No.	Item	Code	D. C. Resistance in Ohms
P-9A417	Antenna R. F. Transformer	T1	
	Range B Primary Winding		21.8
	Range C Primary Winding		0.3
	Range D Primary Winding		0.2
	Range B Secondary Winding		6.1
	Range C Secondary Winding		1.9
	Range D Secondary Winding		Small
P-9A449	Interstage R. F. Transformer	T2	
	Range B Primary Winding		3.7
	Range C Primary Winding		2.6
	Range D Primary Winding		0.5
	Range B Secondary Winding		5.8
	Range C Secondary Winding		1.8
	Range D Secondary Winding		Small
P-9A406	Oscillator Inductors	T8	
	Range B Plate Coil		1.1
	Range C Plate Coil		1.0
	Range D Plate Coil		0.3
	Range B Grid Coil		
	Red White Tap to White		3.7
	Red White Tap to Ground		0.5
	Range C Grid Coil		
	Green White Tap to Green		0.7
	Green White Tap to Ground		0.3

Part No.	Item	Code	D. C. Resistance in Ohms
P-9A406	Oscillator Inductors cont'd	T8	
	Range D Grid Coil		
	Black White Tap to Black		Small
	Black White Tap to Ground		Small
P-9A407	1st I. F. Transformer	T3	
	Primary Winding		8.9
	Secondary Winding		8.9
	Coupling Winding		0.5
P-9A408	2nd I. F. Transformer	T4	
	Primary Winding		8.9
	Secondary Winding		8.9
	Coupling Winding		0.5
P-9A409	3rd I. F. Transformer	T5	
	Primary Winding		9.9
	Secondary Winding		27.3
P-50X11	Audio Input Transformer	T6	
	Primary Winding		1005.0
	Secondary Winding		
	Center Tap to Inside		580.0
	Center Tap to Outside		630.0
P-12A224	Permanent Magnet Dynamic Speaker		
	Speaker Voice Coil		1.6
	Audio Output Transformer	T7	
	Primary Winding		
	Center Tap to Inside		199.2
	Center Tap to Outside		224.3
	Secondary Winding		Small
P-9A281	Single Filament Reactor	L1	Small
P-9A410	Double Filament Reactor—Either Section	L2	Small
P-9A400	2nd I. F. Plate Isolating Reactor	L3	35.9
P-9A391	High Frequency Oscillator Tracking Coil	L4	1.0

©John F. Rider, Publisher

MODELS 62-207, 62-209
62-221
Alignment, Parts

MONTGOMERY-WARD & CO.

Alignment and Calibration

Correct alignment is extremely important in connection with all wave receivers. The receivers are all properly aligned at the factory with precision instruments and realignment should not be attempted unless all other possible causes of the faulty operation have first been investigated and unless the service technician has the proper equipment.

A signal generator that will provide an accurately calibrated signal at 456, 1730, 1500, 600, 4800, 4200, 16,000, 15,000 and 6000 KC and an output indicating meter are required. It will be practically impossible to align the receiver if unsatisfactory apparatus is used. If a station is tuned in with the selectivity control in the broad position and this control is then turned to the sharp position, the station may disappear. This is not an indication that the receiver is out of alignment.

Use a non-metallic screwdriver for the adjustments. The complete procedure is as follows:

I. F. Adjustment

Set the signal generator for a signal of 456 KC.

Connect the output of the signal generator through a 0.1 mf. condenser to the switch end of condenser C11—see Fig. 2. There is a lead which goes to the lug on top of the center stator section of the tuning condenser—see Fig. 11. The connection can be made at this lug.

Connect the ground lead of the receiver to the ground post of the signal generator.

Turn the band selector to the Range B position (standard wave band—purple dial color).

Turn the selectivity control to the sharp position and keep it in this position for all adjustments.

Turn the volume control to the maximum position.

Attenuate the signal from the signal generator to prevent the levelling-off action of the A.V.C.

Then adjust the five I.F. trimmers until maximum output is obtained. The adjusting screws for these condensers are reached from the top of the chassis, and the location is shown in Fig. 11.

Range B Alignment

1730 KC Adjustment

Set the signal generator for 1730 KC.

Turn the rotor of the tuning condenser to the full open position.

Keep the band selector in the standard wave position.

Connect the antenna lead of the receiver through a 200 mmf. condenser to the output of the signal generator.

For this and all subsequent adjustments keep the volume control at the maximum position and attenuate the signal from the signal generator to prevent A.V.C. action.

Adjust the oscillator Range B trimmer (C32) until maximum output is obtained. The location of this trimmer is shown in Fig. 9.

1500 KC Adjustment

Set the signal generator for 1500 KC.

Turn the rotor of the tuning condenser carefully until maximum output is obtained.

Loosen the pointer set screw and set the large pointer at the 1500 KC mark on the standard wave band scale. Retighten the set screw.

Adjust the interstage Range B trimmer (C8) and antenna Range B trimmer (C2) to maximum.

Do not change the setting of the oscillator Range B trimmer.

600 KC Adjustment

Set the signal generator for 600 KC.

Turn the tuning condenser rotor until maximum output is obtained.

Turn the rotor slowly back and forth at the same time adjusting the 600 KC trimmer until the peak of greatest intensity is obtained. See Fig. 9 for location of this trimmer.

Be sure to use a non-metallic screwdriver for this adjustment.

Range C Alignment

4800 KC Adjustment

Set the signal generator for 4800 KC.

Connect the antenna lead of the receiver through a 400 ohm resistor to the output of the signal generator.

Turn the rotor of the tuning condenser to the full open position.

Turn the band selector in the Range C position (1st short wave band—green dial color).

As mentioned above, keep the volume control at the maximum position and attenuate the signal from the signal generator to prevent A.V.C. action.

Adjust the oscillator Range C trimmer (C30) until maximum output is obtained. See Fig. 9 for location of this trimmer.

4200 KC Adjustment

Set the signal generator for 4200 KC.

Turn the rotor of the tuning condenser carefully until maximum output is obtained.

Adjust the interstage Range C trimmer (C9) and antenna Range C trimmer (C3) to maximum.

Do not change the setting of the oscillator Range C trimmer.

Range D Alignment

16,000 KC Adjustment

Set the signal generator for 16,000 KC.

Keep the antenna lead of the receiver connected through the 400 ohm resistor to the output of the signal generator.

Turn the rotor of the tuning condenser to the full open position.

Turn the band selector to the Range D position (2nd short wave band—red dial color).

As mentioned above, keep the volume control at the maximum position and attenuate the signal from the signal generator to prevent A.V.C. action.

Adjust the oscillator Range D trimmer (C29) until maximum output is obtained. See Fig. 9 for location of this trimmer.

15,000 KC Adjustment

Set the signal generator for 15,000 KC.

Turn the rotor of the tuning condenser carefully until maximum output is obtained.

Adjust the interstage Range D trimmer (C10) and antenna Range D trimmer (C4) to maximum.

When adjusting the interstage Range D trimmer, it will be necessary at the same time to turn the tuning condenser rotor slowly back and forth until the peak of greatest intensity is obtained.

Then go back and repeat the procedure as given for the 16,000 KC adjustment. If it is found necessary to make any appreciable change in the setting of the oscillator Range D trimmer, the 15,000 KC adjustment must be repeated.

Do not make any further change in the setting of the oscillator Range D trimmer.

6000 KC Adjustment

Set the signal generator for 6000 KC.

Turn the tuning condenser rotor until maximum output is obtained.

Turn the rotor slowly back and forth at the same time adjusting the 6000 KC trimmer until the peak of greatest intensity is obtained. See Fig. 9 for location of this trimmer.

Use a non-metallic screwdriver for this adjustment.

Batteries Required

The batteries and voltages required are shown in Figs. 2 and 3. The "A" drain is .74 amperes at 2 volts while the "B" drain is discussed below.

"B" Battery

Class "B" amplification is used in the output stage and the "B" battery consumption will, therefore, depend upon the output volume. The "B" consumption will also depend, to some extent, upon the strength of the incoming signal as the latter affects the A.V.C. voltage. When no signal is being received the "B" drain is 20 milliamperes. When the volume control is at maximum and with high output volume, the "B" drain can become 40 milliamperes. A milliammeter in the "B" line will quickly determine if the "B" drain is excessive or normal.

"C" Batteries

For the "C" battery a special battery with 4½, 9 and 16½ volt taps as indicated in Fig. 3 may be used, or one standard 22½ volt and one standard 4½ volt "C" battery can be connected as shown in Fig. 4 to supply the necessary voltages.

"A" Battery and Regulator

This receiver is designed to operate with a 2 volt storage cell, but may be operated with a 3 volt dry "A" battery if used with a voltage regulator. The receiver may also be used with an air cell "A" battery provided a series resistor is used.

3 Volt "A" Battery—The voltage regulator required with this type of battery as illustrated in Fig. 5 is not supplied with the receiver unless specified. This device consists of a rheostat which controls the voltage, a voltmeter for measuring its value as supplied to the receiver and a small push button switch for cutting the voltmeter in and out of the circuit. It has two prongs at the bottom which plug into the socket at the rear left corner of the chassis. The circuit diagram of the regulator is shown in Fig. 6.

When a new 3 volt "A" battery is connected, the adjusting knob must be turned to the left hand position and then turned up until th voltmeter indicates 1.9 to 2 volts. The push button must be held in until the adjustment is completed. Caution the user never to operate the receiver with the adjustment beyond 2 volts.

Air Cell "A" Battery—If an air cell "A" battery is used, a series resistor will be required to reduce the voltage to the proper level of 2 volts for the tube filaments. Although the voltage regulator mentioned above can be used, the series resistor is cheaper and is satisfactory as the voltage of one of these batteries drops very little during the useful life of the battery.

Replacement Parts List

TRANSFORMERS AND COILS

Part No.	Code	Description	Selling Price
P-9A847	T1	Antenna R. F. Transformer and Can Assembly	$1.42
P-9A848	T2	Interstage R. F. Transformer and Can Assembly	1.46
P-9A486	T6	Oscillator Coil & Can Assembly	1.24
P-9A847	T3	1st I. F. Transformer and Can Assembly	.94
P-9A488	T4	2nd I. F. Transformer and Can Assembly	.94
P-9A489	T5	3rd I. F. Transformer and Can Assembly	1.10
P-30X11	T8	Audio Input Transformer	1.02
P-51X22	T7	Audio Output Transformer (Part of Speaker Assembly—may be purchased separately)	1.20
P-9A281	L1	Single Filament Reactor	.12
P-9A449	L2	Double Filament Reactor	.24
P-9A450	L3	2nd I. F. Plate Isolating Reactor	.28
P-9A851	L4	High Frequency Oscillator Tracking Coil	.12

VOLTAGE REGULATOR

Part No.	Description	Selling Price
P-20A15	Complete Plug-In Voltage Regulator	$2.54
P-2X48	Special Fiber Washer with Offset Insulation	.04
P-2A38	Switch Push Button	.12
P-48X36	Rheostat	.32
P-20A7	Rheostat Knob	.06
P-36A98	0-3 Volt D. C. Voltmeter	.96
P-6A12	Double Pin Plug Assembly	.06

RESISTORS

Part No.	Code	Resistance	Wattage	Type	Selling Price
P-A9268	R1	1.0 Megohm	0.2	Carbon	$ .06
P-A9282	R2	5,000 Ohms	0.5	Carbon	.06
P-A9289	R3	400,000 Ohms	0.2	Carbon	.06
P-A9304	R4	300,000 Ohms	0.2	Carbon	.06
P-A9284	R5	300,000 Ohms	0.2	Carbon	.06
P-A9284	R6	100,000 Ohms	0.2	Carbon	.06
P-36X208	R7	2.0 Megohms	Volume Control & Switch		.56
P-A9285	R8	1.0 Megohm	0.2	Carbon	.06
P-A9286	R9	2.0 Megohms	0.2	Carbon	.06
P-A9305	R10	5.0 Megohms	0.2	Carbon	.06
P-A9311	R11	15,000 Ohms	0.2	Carbon	.06
P-48X208	R12	150,000 Ohms	Tone Control		.32
P-A9284	R13	300,000 Ohms	0.2	Carbon	.06
P-48X19		6,000 Ohms	6.5	Wire Wound—for use with the Air Cell Dry "A" Battery	.10

CONDENSERS

Part No.	Code	Capacity	Voltage	Type	Selling Price
P-47X49	C1	250 mmf.		Moulded	$ .08
P-17A38	C2	3-25 mmf.		Antenna Range B Trimmer	.06
P-17A36	C3	2-25 mmf.		Antenna Range C Trimmer	.06
P-17A36	C4	3-25 mmf.		Antenna Range D Trimmer	.06
P-46X48	C5	0.05 mf.	180	Tubular	.08
P-46X48	C6	0.05 mf.	180	Tubular	.08
P-46X117	C7	0.25 mf.	180	Tubular	.12
P-17A38	C8	2-25 mmf.		Interstage Range B Trimmer	.06
P-17A36	C9	2-25 mmf.		Interstage Range C Trimmer	.06
P-17A36	C10	2-25 mmf.		Interstage Range D Trimmer	.06
P-47X53	C11	25 mmf.		Moulded	.06
P-46X80	C12	0.05 mf.	180	Tubular	.08
P-17A30	C13	150-250 mmf.		1st I. F. Trimmer Condensers	.32
P-46X46	C14	150-250 mmf.			
	C15	4.0 mf.	150	Dry Electrolytic	.60
	C16	8.0 mf.	150		
P-17A30	C17	150-250 mmf.		2nd I. F. Trimmer Condensers	.32
	C18	150-250 mmf.			
P-46X80	C19	0.05 mf.	180	Tubular	.08
P-17A49	C20	70-190 mmf.		3rd I. F. Primary Trimmer	.14
P-47X61	C21	70 mmf.		Moulded	.06
P-46X120	C22	0.01 mf.	300	Tubular	.08
P-46X105	C23	0.002 mf.	600	Tubular	.08
P-46X103	C24	0.05 mf.	240	Tubular	.08
P-46X117	C25	0.25 mf.	180	Tubular	.12
P-47X53	C26	25 mmf.		Moulded	.06
P-17A25	C27	300-600 mmf.		600 KC Osc. Padding Cond.	.32
	C28	40-160 mmf.		6000 KC Osc. Padding Cond.	
P-17A41	C29	2-25 mmf.		Oscillator Range D Trimmer	.06
P-17A36	C30	7-75 mmf.		Oscillator Range C Trimmer	.06
P-47X49	C31	1400 mmf.		Moulded	.14
P-17A41	C32	2-25 mmf.		Oscillator Range B Trimmer	.06
P-46X117	C33	0.25 mf.	180	Tubular	.12
P-47X64	C34	4 mmf.		Moulded	.08
P-25A38		3 Section Gang Condenser Complete with Drive Assembly—Less Dial Assembly			3.92

DIAL AND DRIVE ASSEMBLY

Part No.	Description	Selling Price
P-5A37	Gang Condenser Bracket and Bearing	$ .32
P-20X288	Drive Shaft	.08
P-2X287	Drive Pulley with set screw	.04
P-20X70	Main Shaft Pointer Stud	.04
P-36X205	Gear (Rotary)	.24
P-20X210	Gear (Stationary)	.04
P-2X131	Gear Spreader Spring	.04
P-20X288	Main Pointer Shaft Assembly	.32
P-20X209	Micrometer Pointer Shaft Assembly	.32
P-24X309	Compound Gear Assembly	.12
P-37X33	Tension Pulley Arm Assembly	.32
P-20X37	Tension Pulley Spring	.04
P-20X25	Tension Bearing	.04
P-3X28	Drive Belt	.24
P-3X27	Small Pointers	.04
P-19X8	17" Black Drive Cord ..... Dozen	.10
P-47X30	Brass Collars & Set Screws for securing above cord to shaft	.04
P-30X36	Dial Clamp to secure Dial Strip to frame (with 6-32x3/16" mounting screw)	.06
P-15A49	Dial Bracket Assembly Complete	1.26
P-36X85	Dial Strip Only	.24
P-19X28	Double End Pointer	.04
P-19X26	Micrometer Pointer	.04

NOTE: The Gang Condenser and Drive Assembly, less Dial Assembly, can be purchased complete—see Condenser List.

MISCELLANEOUS

Part No.	Description	Selling Price
P-3A64	Type 30 Tube Socket	$ .06
P-3A65	Type 24 Tube Socket	.08
P-3A180	Type 19 Tube Socket	.9
P-4A17	Single Lug Terminal Strip (Mounting Foot to Right of Lug)	.04
P-4A18	Single Lug Terminal Strip (Mounting Foot to Left of Lug)	.04
P-4A19	Two Lug Terminal Strip (Both Lugs Insulated—Ground Lug in Center Extended as Mtg. Foot)	.08
P-48A9	Single Lug Terminal Strip (Mounting Hole Used)	.04
P-2A45	Selectivity Control Switch	.22
P-2A46	Band Selector Switch complete with shielding fin	1.08
P-11X214	Antenna and Ground Lead Assembly	.14

PRICES SUBJECT TO CHANGE WITHOUT NOTICE

©John F. Rider, Publisher

MONTGOMERY-WARD & CO.

Power Consumption - 1.8 Amperes at 6.3 Volts
Power Output - - - - - - -1 Watt Undistorted

Tuning Frequency Range
B Range - - - - - - - - - - 535 to 1730 KC.
C Range - - - - - - - - - - 1680 to 4800 KC.
D Range - - - - - - - - - - 5650 to 16000 KC.

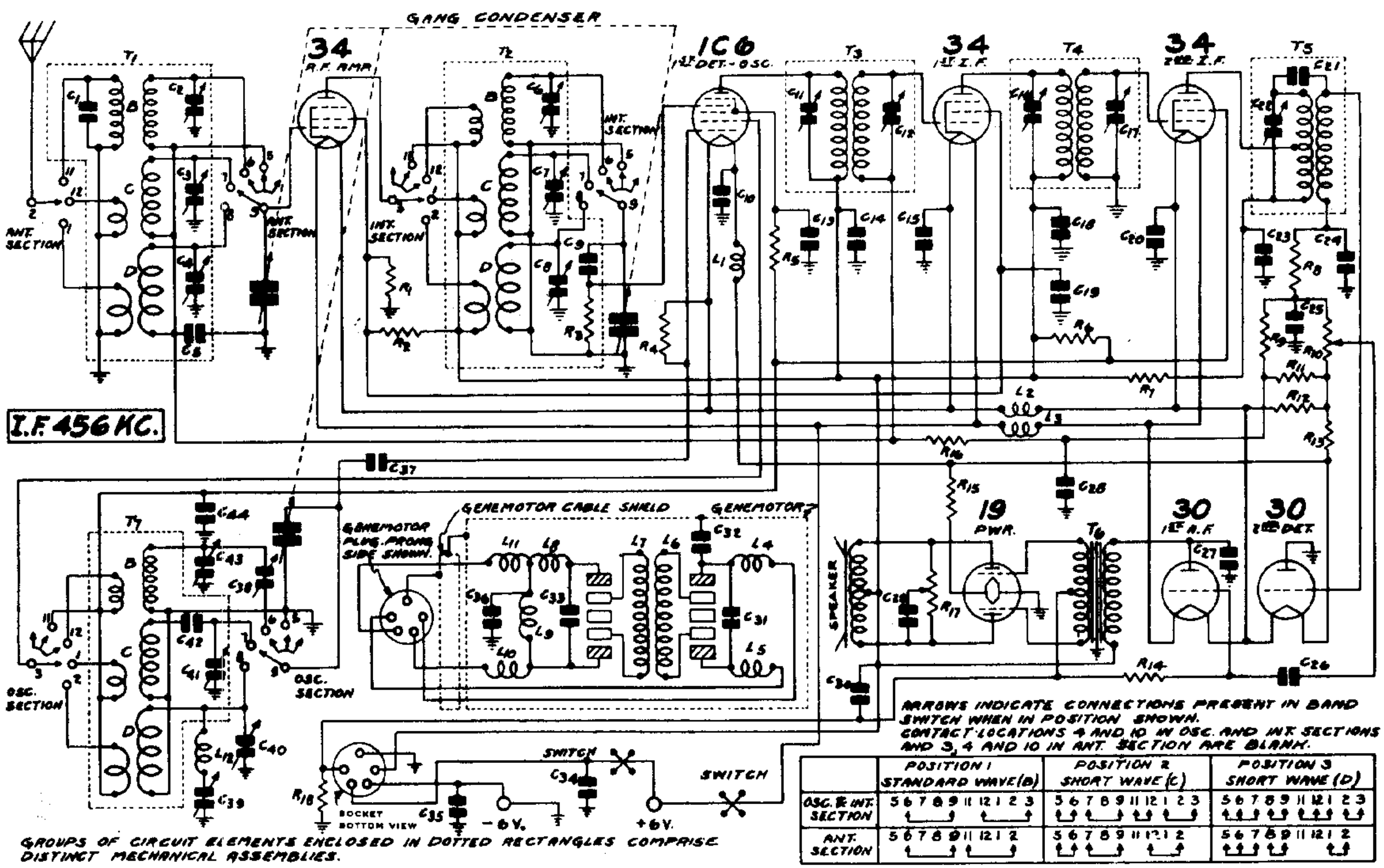

GROUPS OF CIRCUIT ELEMENTS ENCLOSED IN DOTTED RECTANGLES COMPRISE DISTINCT MECHANICAL ASSEMBLIES.

Nov., 1935

C 1 250 mmf.
C 2 2-25 mmf.
C 3 2-25 mmf
C 4 2-25 mmf
C 5 .05 mf. 180 V.
C 6 2-25 mmf.
C 7 2-25 mmf.
C 8 2-25 mmf.
C 9 35 mmf.
C10 .25 mf. 180 V.
C11 70-150 mmf. } ONE
C12 70-150 mmf. } UNIT
C13 .05 mf. 180 V.
C14 20.0 mf. 150 V. Electrolytic
C15 .25 mf. 180 V.
C16 70-150 mmf. } ONE
C17 70-150 mmf } UNIT
C18 .50 mf. 180 V.
C19 .85 mf. 180 V
C20 .05 mf. 180 V.
C21 50 mmf.
C22 40-100 mmf.
C23 .05 mf. 180 V.
C24 100 mmf.
C25 50 mmf
C26 .002 mf. 600 V.
C27 250 mmf.
C28 .01 mf. 180 V.
C29 .05 mf. 240 V.
C30 20.0 mf. 150 V. Electrolytic
C31 .25 mf. 180 V.
C32 .05 mf. 180 V.
C33 .25 mf. 180 V.
C34 .25 mf. 180 V.
C35 .25 mf. 180 V.
C36 .50 mf. 180 V.
C37 35 mmf.
C38 300-600 mmf. } ONE
C39 40-100 mmf. } UNIT
C40 2-25 mmf.
C41 2-25 mmf.
C42 1400 mmf.
C43 2-25 mmf.
C44 .25 mf. 18 V.

R 1 100,000 ohm .2 W.
R 2 60,000 ohm .2 W.
R 3 1 megohm .2 W.
R 4 100,000 ohm .2 W.
R 5 5,000 ohm .2 W.
R 6 10,000 ohm .5 W.
R 7 1,000 ohm .2 W.
R 8 60,000 ohm .2 W.
R 9 3 megohm .2 W.
R10 1 megohm Vol. Control
R11 1 megohm .2 W.
R14 3 megohm .2 W.
R16 500,000 ohm .2 W.
R17 150,000 ohm Tone Control
R12 12.5 ohm 1.0 W. } ARMORED
R13 12.5 ohm 1.0 W. } WIRE-WOUND
R15 .70 ohm .50 W. } RESISTOR
R18 150 ohm 2.0 W. }

T 1 Ant. R. F. Trans.
T 2 Interstage R. F. Trans.
T 3 1st I. F. Trans.
T 4 2nd I. F. Trans.
T 5 3rd I. F. Trans.
T 6 Push Pull Input Trans.
T 7 Osc. Inductors

L 1 Single Filament Reactor
L 2 } Double Filament
L 3 } Reactor
L 4 "B" Choke
L 5 "B" Choke
L6, L7, L8 & L9 Genemotor Windings
L10 "A" Choke
L11 "A" Choke
L12 Osc. Tracking Coil

MODEL 62-215
Voltage, Socket
Trimmers, Battery Data

MONTGOMERY-WARD & CO.

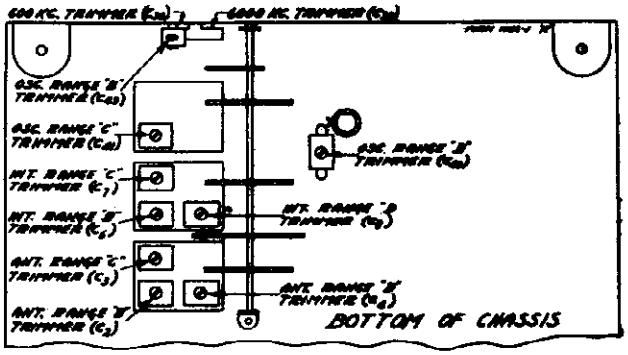

Fig. 3—Arrangement of Trimmers

VOLTAGES AT SOCKETS
Antenna Shorted to Ground—Battery 6 Volts under load
Volume Control at Maximum

Type of Tube	Function	Across Filament	Plate to Ground	Screen to Ground	Bias Voltage (see Notes)	Normal Plate M. A.
34	R. F.	2.0	135	45	1.5(1)	1.7
1C6	1st Det.	2.0	135 80(2)	70	2.0(3)	3.2 1.7(2)
34	1st I. F.	2.0	135	45	1.5(1)	1.7
34	2nd I. F.	2.0	135	80	4.0(3)	3.2
30	2nd Det.	2.0				
30	1st A. F.	2.0	135		8.0(4)	2.3
19	Power	2.0	135		3.9(5)	2.3 (per plate)

(1) As read from negative filament leg to low potential end of resistor R12.
(2) Anode Grid
(3) As read from negative filament leg to ground.
(4) Total voltage drop from negative filament leg to ground and across R18.
(5) As read across R18.

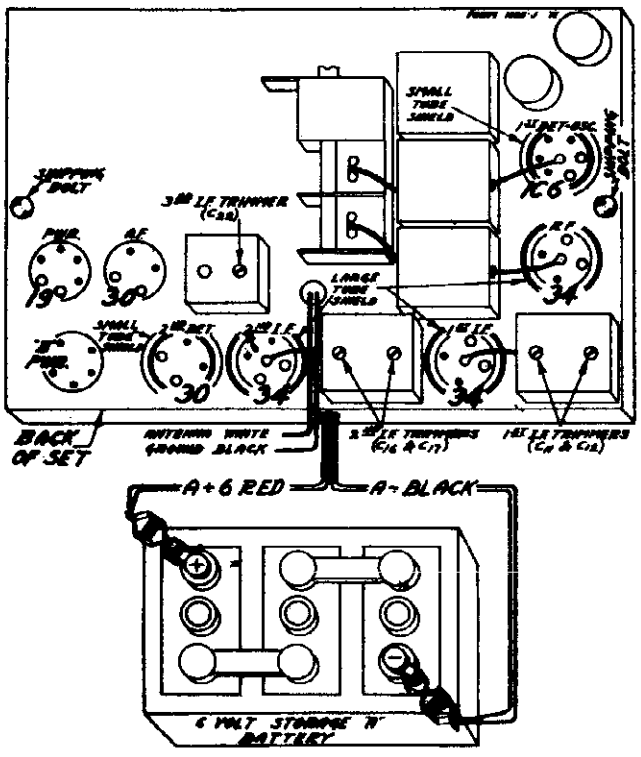

Fig. 4—Tube Arrangement and Battery Connections

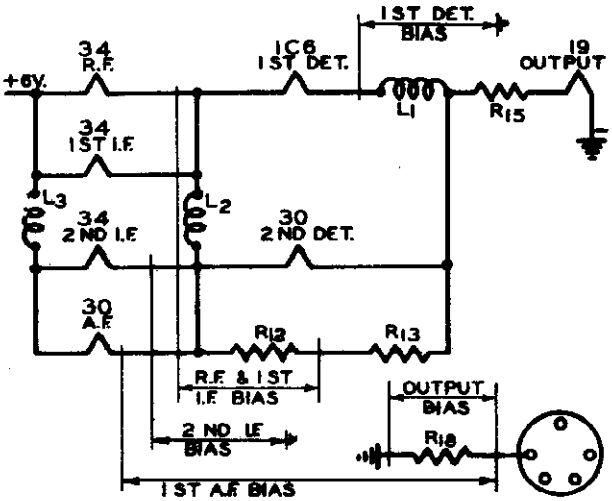

Fig. 6—Abridged Wiring Diagram showing Filament Wiring System and Points at which No-Signal Bias Voltages are obtained.

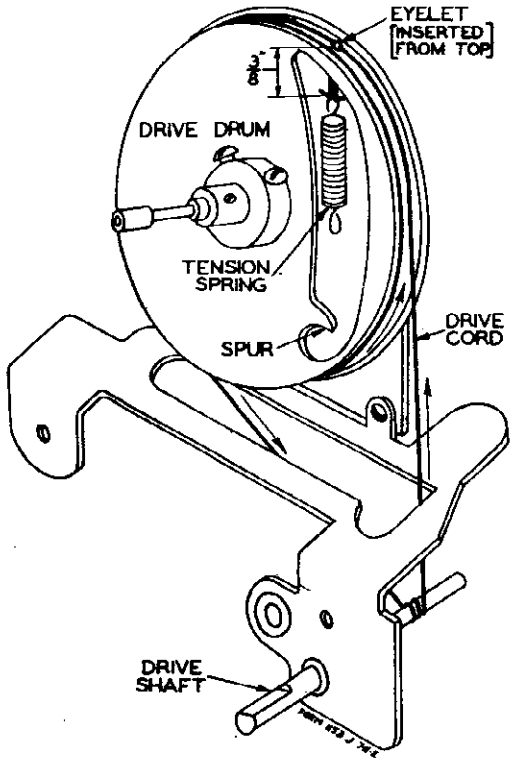

Fig. 7—Drive Cord Replacement

Battery Connections—CAUTION

CAUTION: Do not turn the switch on unless ALL the tubes are in the sockets.

CAUTION: Be sure that the battery clips are properly connected to the battery. If the connections are reversed, the receiver may be damaged.

©John F. Rider, Publisher

MODEL 62-215

MONTGOMERY-WARD & CO. Coil Data, Resistance

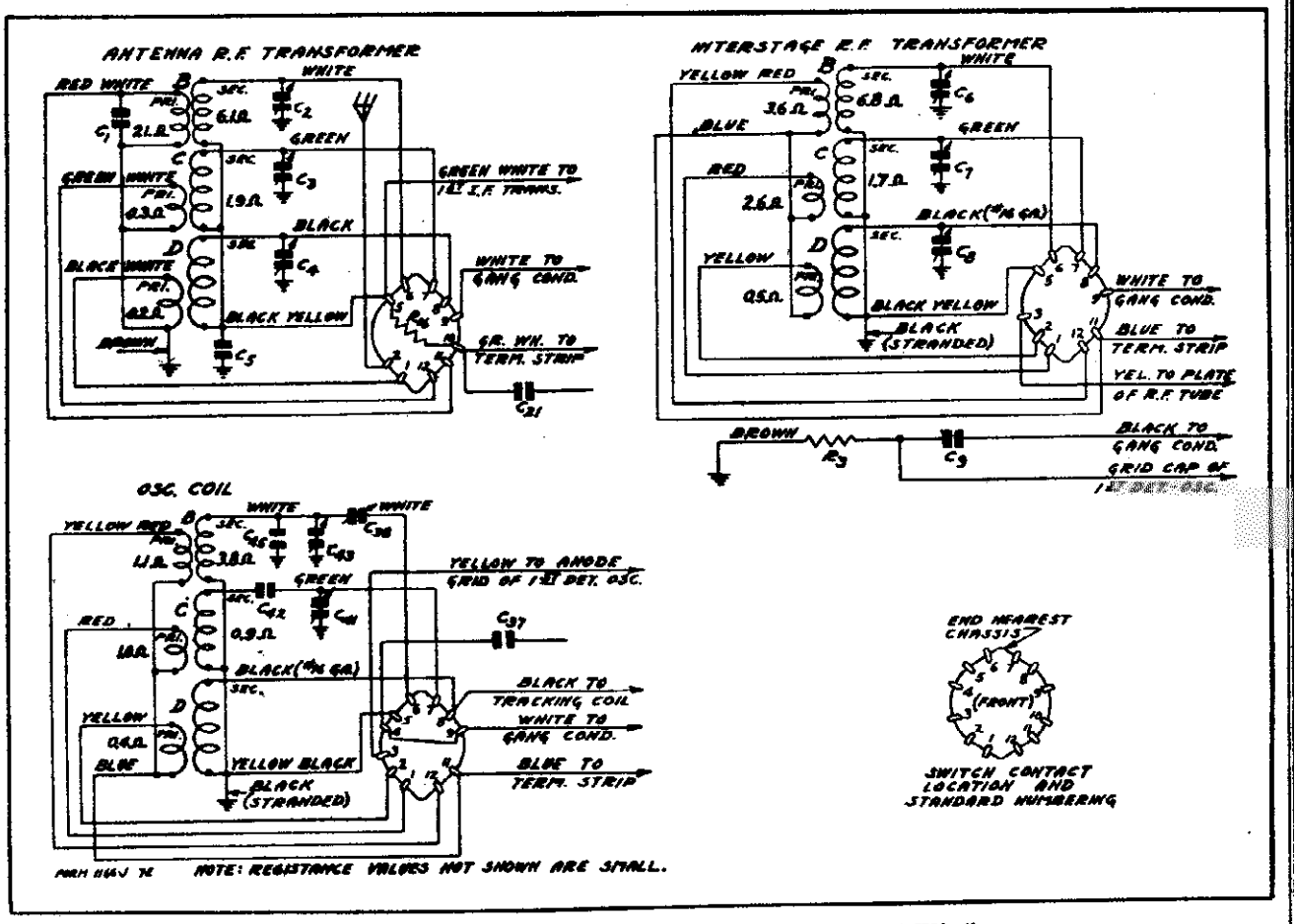

Fig. 5—Color Coding of Coil Wires and D. C. Resistance of Windings.
(Also see complete D. C. Resistance List Below)

D. C. Resistance of Windings

Refer to Figs. 5 & 2

Following are the D. C. resistances of the various coil windings in the chassis. The values given below will vary slightly in different sets.

Part No.	Winding	Code	D. C. Resistance in Ohms
P-9A419	Antenna R. F. Transformer	T1	
	Range B Primary Winding		21.0
	Range C Primary Winding		0.3
	Range D Primary Winding		0.2
	Range B Secondary Winding		6.1
	Range C Secondary Winding		1.9
	Range D Secondary Winding		Small
P-9A420	Interstage R. F. Transformer	T2	
	Range B Primary Winding		3.6
	Range C Primary Winding		2.6
	Range D Primary Winding		0.5
	Range B Secondary Winding		6.8
	Range C Secondary Winding		1.7
	Range D Secondary Winding		Small
P-9A421	Oscillator Coils	T7	
	Range B Plate Coil		1.1
	Range C Plate Coil		1.0
	Range D Plate Coil		9.4
	Range B Grid Coil		3.8
	Range C Grid Coil		0.9
	Range D Grid Coil		Small
P-9A422	1st I. F. Transformer	T3	
	Primary Winding		11.4
	Secondary Winding		11.4
P-9A423	2nd I. F. Transformer	T4	
	Primary Winding		11.4
	Secondary Winding		11.4
P-9A424	3rd I. F. Transformer	T5	
	Primary Winding (either section)		8.4
	Secondary Winding		130.8
P-50X11	Audio Input Transformer	T6	
	Primary Winding		1005.0
	Secondary Winding		
	Center Tap to Inside		580.0
	Center Tap to Outside		630.0
*P-12A218	8 Inch Magnetic Speaker		
	Speaker Coil		
	Center Tap to Inside		275.0
	Center Tap to Outside		300.0
P-9A403	Single Filament Reactor	L1	.65
P-9A404	Double Filament Reactor - (either section)	L2 & L3	.65
P-9A391	High Frequency Oscillator Tracking Coil	L12	0.7

*Speakers with other part numbers may have slightly different values of D. C. Resistance.

MODEL 62-215
Alignment, Drive Cord
Parts List

MONTGOMERY-WARD & CO.

Alignment and Calibration

A signal generator that will provide an accurately calibrated signal at 456, 1730, 1500, 600, 4800, 4200, 16,000, 15,000 and 6000 KC and an output indicating meter are required. It will be practically impossible to align the receiver if unsatisfactory apparatus is used.

Use a non-metallic screwdriver for the adjustments. The complete procedure is as follows:

I. F. Adjustment

Set the signal generator for a signal of 456 KC.

Connect the output of the signal generator through a 0.1 mf. condenser to the switch end of condenser C9—see Fig. 2. There is a lead which goes to the lug on the top of the center stator section of the tuning condenser—see Fig. 4. The connection can be made at this lug.

Connect the ground lead of the receiver to the ground post of the signal generator.

Turn the band selector to the Range B position (standard wave band—purple dial color).

Turn the volume control to the maximum position.

Attenuate the signal from the signal generator to prevent the levelling-off action of the A.V.C.

Then adjust the five I.F. trimmers until maximum output is obtained. The adjusting screws for these condensers are reached from the top of the chassis, and the location is shown in Fig. 4.

Range B Alignment

1730 KC Adjustment

Set the signal generator for 1730 KC.

Turn the rotor of the tuning condenser to the full open position.

Keep the band selector in the standard wave position.

Connect the antenna lead of the receiver through a 200 mmf. condenser to the output of the signal generator.

For this and all subsequent adjustments keep the volume control at the maximum position and attenuate the signal from the signal generator to prevent A.V.C. action.

Adjust the oscillator Range B trimmer (C43) until maximum output is obtained. The location of this trimmer is shown in Fig. 3.

1500 KC Adjustment

Set the signal generator for 1500 KC.

Turn the rotor of the tuning condenser carefully until maximum output is obtained.

Loosen the pointer set screw and set the large pointer at the 1500 KC mark on the standard wave band scale. Retighten the set screw.

Adjust the interstage Range B trimmer (C6) and antenna Range B trimmer (C2) to maximum.

Do not change the setting of the oscillator Range B trimmer.

600 KC Adjustment

Set the signal generator for 600 KC.

Turn the tuning condenser rotor until maximum output is obtained.

Turn the rotor slowly back and forth at the same time adjusting the 600 KC trimmer until the peak of greatest intensity is obtained. See Fig. 3 for location of this trimmer.

Be sure to use a non-metallic screwdriver for this adjustment.

Range C Alignment

4800 KC Adjustment

Set the signal generator for 4800 KC.

Connect the antenna lead of the receiver through a 400 ohm resistor to the output of the signal generator.

Turn the rotor of the tuning condenser to the full open position.

Turn the band selector to the Range C position (1st short wave band—green dial color).

As mentioned above, keep the volume control at the maximum position and attenuate the signal from the signal generator to prevent A.V.C. action.

Adjust the oscillator Range C trimmer (C41) until maximum output is obtained. See Fig. 3 for location of this trimmer.

4200 KC Adjustment

Set the signal generator for 4200 KC.

Turn the rotor of the tuning condenser carefully until maximum output is obtained.

Adjust the interstage Range C trimmer (C7) and antenna Range C trimmer (C3) to maximum.

Do not change the setting of the oscillator Range C trimmer.

Range D Alignment

16,000 KC Adjustment

Set the signal generator for 16,000 KC.

Keep the antenna lead of the receiver connected through the 400 ohm resistor to the output of the signal generator.

Turn the rotor of the tuning condenser to the full open position.

Turn the band selector to the Range D position (2nd short wave band—red dial color).

As mentioned above, keep the volume control at the maximum position and attenuate the signal from the signal generator to prevent A.V.C. action.

Adjust the oscillator Range D trimmer (C40) until maximum output is obtained. See Fig. 3 for location of this trimmer.

15,000 KC Adjustment

Set the signal generator for 15,000 KC.

Turn the rotor of the tuning condenser carefully until maximum output is obtained.

Adjust the interstage Range D trimmer (C8) and antenna Range D trimmer (C4) to maximum.

When adjusting the interstage Range D trimmer, it will be necessary at the same time to turn the tuning condenser rotor slowly back and forth until the peak of greatest intensity is obtained.

Then go back and repeat the procedure as given for the 16,000 KC adjustment. If it is found necessary to make any appreciable change in the setting of the oscillator Range D trimmer, the 15,000 KC adjustment must be repeated.

Do not make any further change in the setting of the oscillator Range D trimmer.

6000 KC Adjustment

Set the signal generator for 6000 KC.

Turn the tuning condenser rotor until maximum output is obtained.

Turn the rotor slowly back and forth at the same time adjusting the 6000 KC trimmer until the peak of greatest intensity is obtained. See Fig. 3 for location of this trimmer.

Use a non-metallic screwdriver for this adjustment.

Replacing Drive Cord

Remove the chassis from the cabinet.

Take off the station pointer by removing the screw at the center of the dial.

Loosen the two set screws in the collar on the band selector shaft.

Loosen the dial assembly by taking out the two screws which secure the bottom of this assembly to the chassis and one screw at the top which secures this assembly to the bracket.

Pull the dial assembly forward until the collar is free of the band selector shaft; and lay the assembly face downward in front of the chassis.

Turn the drive drum until the opening in this drum is approximately vertical and with the hole at the top as shown in Fig. 7.

Remove the tension spring and the old drive cord.

When replacing this drive cord a 30 lb. test cord as regularly supplied by the factory should be used.

See that the eyelet is in the hole in the drive drum as shown in Fig. 7. Insert one end of the new drive cord from the outside through the hole in the eyelet in the drive drum.

Tie the end of the cord, which has been inserted through the hole, to one end of the tension spring.

Wrap the cord in a counter clockwise direction (facing front of chassis) around the drive drum approximately one and one half turns, progressing toward the front.

Then tilt the chassis up on its back panel and bring the cord mentioned in the previous paragraph down to the drive shaft. Wrap it two and one half times around this shaft as shown in Fig. 7, progressing toward the back of chassis.

Wrap the cord on directly in line with the drive drum above.

Then bring this cord up to the drive drum until it is up to the eyelet in the drive drum as shown in the illustration.

Now insert the free end of the cord through the hole in the eyelet and tie it to the end of the tension spring. The end of the spring when hanging free and with the slack taken out of the drive cord should be ¾" or less from the flange of the drum as shown in Fig. 7. Cut off the surplus length of cord after it is knotted.

Then secure the other end of the tension spring over the spur on the drive drum.

Turn the drive shaft back and forth several times.

Replace the dial assembly and pointer.

Replace the chassis in the cabinet.

Replacement Parts List

PRICES SUBJECT TO CHANGE WITHOUT NOTICE

RESISTORS

Part No.	Code	Resistance	Wattage	Type	Selling Price
P-A9A88	R1	10,000 Ohms	0.2	Carbon	$ .08
P-A9A89	R2	60,000 Ohms	0.2	Carbon	.08
P-A9A90	R3	1.0 Megohm	0.2	Carbon	.08
P-A9A94	R4	300,000 Ohms	0.2	Carbon	.08
P-A9A88	R5	5,000 Ohms	0.2	Carbon	.08
P-A9A88	R6	10,000 Ohms	0.5	Carbon	.08
P-A9A96	R7	1,000 Ohms	0.2	Carbon	.08
P-A9A91	R8	60,000 Ohms	0.2	Carbon	.08
P-A9A92	R9	2.0 Megohms	0.2	Carbon	.08
P-30X289	R10	1.0 Megohm	Volume Control and Switch		.55
P-A9A93	R11	1.0 Megohm	0.2	Carbon	.08
P-437A9	R12	18.5 Ohms	1.0	Armored Wire Wound	.32
	R13	12.5 Ohms	1.2		
	R14	0.7 Ohms	0.5		
	R15	150.0 Ohms	2.0		
P-A9A95	R16	3.0 Megohms	0.2	Carbon	.08
P-A9A94	R16	500,000 Ohms	0.2	Carbon	.08
P-405X80	R17	150,000 Ohms	Tone Control		.30

CONDENSERS

Part No.	Code	Capacity	Voltage	Type	Selling Price
P-472X9	C1	250 mmf.		Moulded	$ .08
P-17A36	C2	2-35 mmf.		Antenna Range B Trimmer	.08
P-19A36	C3	2-35 mmf.		Antenna Range C Trimmer	.08
P-17A88	C4	2-25 mmf.		Antenna Range D Trimmer	.08
P-18X88	C5	0.05 mf.	100	Tubular	.08
P-17A36	C6	2-35 mmf.		Interstage Range B Trimmer	.08
P-17A36	C7	2-35 mmf.		Interstage Range C Trimmer	.08
P-19A36	C8	2-25 mmf.		Interstage Range D Trimmer	.08
P-472X9	C9	25 mmf.		Moulded	.08
P-405X117	C10	0.25 mf.	100	Tubular	.12
P-17A33	C11	70-130 mmf.		1st I.F. Trimmer Condensers	.16
	C12	70-130 mmf.			
P-405X88	C13	0.05 mf.	100	Tubular	.08
P-402X7	C14	20.0 mf.	150	Wet Electrolytic (Insulated Mtg.)	.46
P-405X117	C15	0.25 mf.	100	Tubular	.12
P-19A38	C16	70-130 mmf.		2nd I.F. Trimmer Condensers	.16
	C17	70-130 mmf.			
P-405X122	C18	0.25 mf.	100	Tubular	.12
P-405X125	C19	0.02 mf.	100	Tubular	.08
P-405X88	C20	0.05 mf.	100	Tubular	.08
P-472X9	C21	25 mmf.		Moulded	.08
P-17A38	C22	40-160 mmf.		3rd I.F. Primary Trimmer	.12
P-405X88	C23	0.05 mf.	100	Tubular	.08
P-472X9	C24	100 mmf.		Moulded	.08
P-472X9	C25	50 mmf.		Moulded	.08
P-405X88	C26	0.05 mf.	100	Tubular	.08
P-472X9	C27	250 mmf.		Moulded	.08
P-405X88	C28	0.05 mf.	100	Tubular	.08
P-405X124	C29	0.01 mf.	200	Tubular	.08
P-402X7	C30	20.0 mf.	150	Wet Electrolytic (Insulated Mtg.)	.46
P-405X117	C31	0.25 mf.	100	Tubular (In Generator)	.12
P-405X86	C32	0.05 mf.	100	Tubular (In Generator)	.08
P-405X117	C33	0.25 mf.	100	Tubular (In Generator)	.12
P-405X117	C34	0.25 mf.	100	Tubular	.12
P-405X119	C35	0.25 mf.	100	Tubular	.12
P-405X120	C36	0.50 mf.	100	Tubular (In Generator)	.14
P-472X35	C37	35 mmf.		Moulded	.08
P-18A48	C38	200-600 mmf.		600 KC Osc. Padding Cond.	.30
	C39	40-160 mmf.		4800 KC Osc. Padding Cond.	
P-17A41	C40	2-35 mmf.		Oscillator Range D Trimmer	.08
P-17A36	C41	2-35 mmf.		Oscillator Range C Trimmer	.08
P-472X9	C42	250 mmf.		Moulded	.14
P-17A41	C43	2-35 mmf.		Oscillator Range B Trimmer	.08
P-405X117	C44	0.25 mf.	100	Tubular	.12
P-472X9	C45	5 mmf.		Moulded	.08
P-34A48	3 Section Gang Padder				1.92

GENEMOTOR AND PARTS

Part No.	Description	Selling Price
P-22A231	Genemotor Complete with Filter Units, Case and Cover	$12.82
P-22A232	Genemotor in case with cover and condensers (C9) and C33) less Filter	10.40
P-13X256	Shielded Four Wire Cable and Plug	.32
P-402X127	1.25 mf. 100 Volt Tubular Condensers (C31 & C32), ea.	.12
P-405X125	0.50 mf. 100 Volt Tubular Condenser (C36)	.14
P-44X80	0.05 mf. 100 Volt Tubular Condenser (C32)	.08
P-9A360	"B" R.F. Choke Coils (L4 and L5), each	.06
P-9A422	"A" Choke Coils (L3) and L11), each	.30

DIAL AND DRIVE ASSEMBLY

Part No.	Description	Selling Price
P-5A27	Gang Support & Bearing Assembly	$ 2.22
P-30X232	Drive Shaft	.08
P-195X1	Horse Shoe Washer	.04
P-30X232	Pointer Shaft	.04
P-24X304	Drive Drum & Hub with Set Screw	.32
P-28X27	Drive Tension Spring	.04
P-30X33	48 Inch Black Drive Cord	.04
P-28X23	Torsion Spring	.04
P-19X9	48 Inch Black Indicator Drive Cord	.02
P-39X30	Brass Collars for securing above cords to Control Shafts	.04
P-30X36	Dial Clamp & Mtg. Screw	.06
P-56X94	Dial Strip	.56
P-15X27	Small Pointers	.04
P-15X34	Large Double End Pointer	.04

TRANSFORMERS AND COILS

Part No.	Code	Description	Selling Price
P-9A419	T1	Antenna R.F. Transformer and Can Assembly	$1.44
P-9A420	T2	Interstage R.F. Transformer and Can Assembly	1.50
P-9A421	T3	Oscillator Coil and Can Assembly	1.28
P-9A422	T3	1st I.F. Transformer and Can Assembly	.82
P-9A423	T4	2nd I.F. Transformer and Can Assembly	.82
P-9A424	T5	3rd I.F. Transformer and Can Assembly	.82
P-30X11	T6	Audio Input Transformer	1.02
P-9A405	L1	Single Filament Reactor	.30
P-9A464	L2	Double Filament Reactor	.24
P-9A360	L4	"B" R.F. Choke Coil (in Genemotor)	.06
P-9A360	L5	"B" R.F. Choke Coil (in Genemotor)	.06
P-9A470	L10	"A" Choke Coil (in Genemotor)	.30
P-9A470	L11	"A" Choke Coil (in Genemotor)	.30
P-9A391	L12	High Frequency Oscillator Tracking Coil	.32

©John F. Rider, Publisher

MODEL 62-229
Schematic

MONTGOMERY-WARD & CO.

Tuning Range - - - - - - - - 530 to 1750 KC
Intermediate Frequency - - - - - - - 175 KC
Power Consumption - 1.9 Amperes at 32 Volts DC
Power Output - - - - - - .25 Watts Undistorted

Nov., 1935

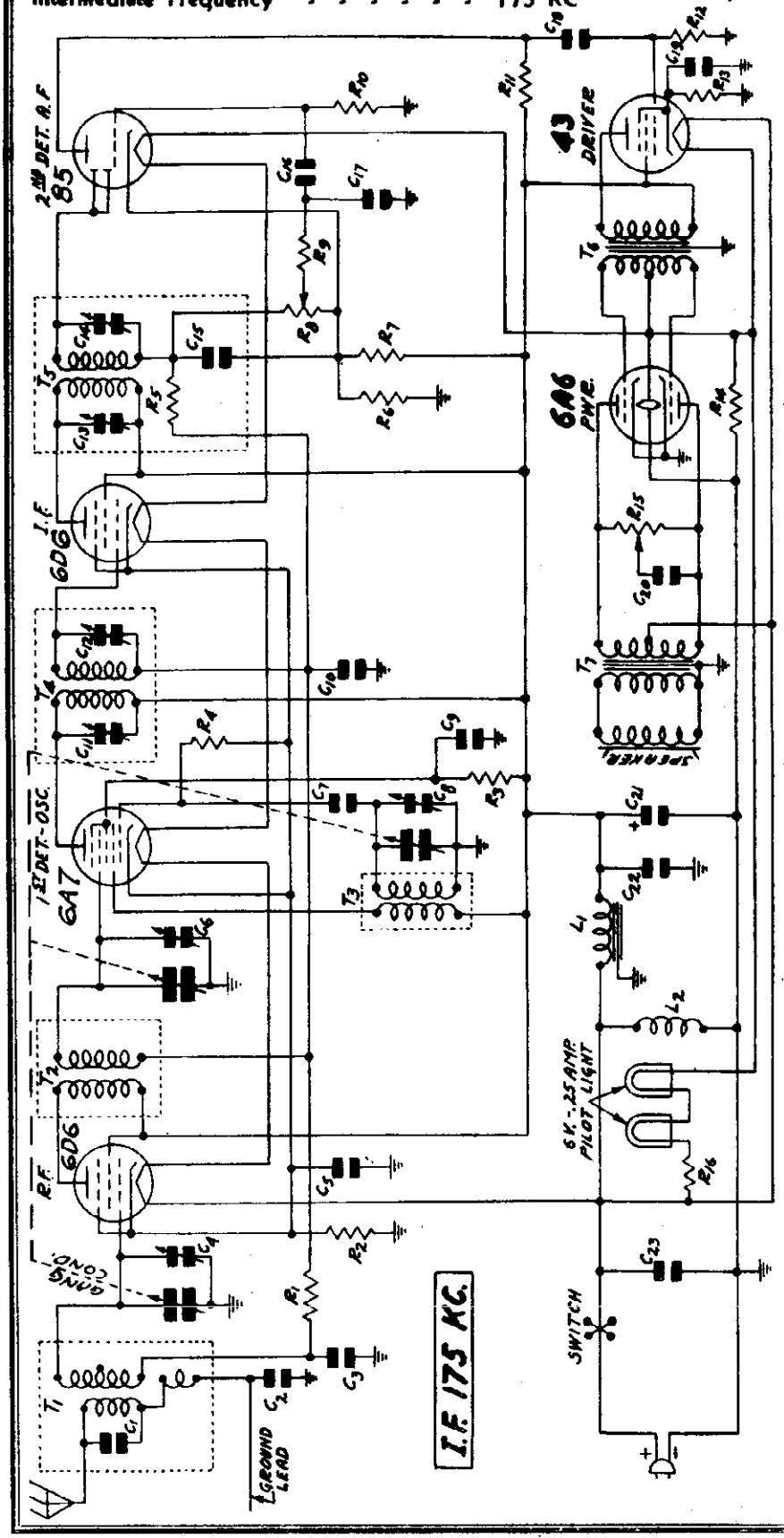

GROUPS OF CIRCUIT ELEMENTS ENCLOSED IN DOTTED RECTANGLES COMPRISE DISTINCT MECHANICAL ASSEMBLIES.

C1 250 MMF MOULDED
C2 .05 MF 180 V.
C3 .05 MF 180 V.
C4 GANG TRIMMER
C5 .05 MF 180 V.
C6 GANG TRIMMER
C7 35 MMF MOULDED
C8 GANG TRIMMER
C9 .05 MF 180 V.
C10 .05 MF 180 V.
C11 40-100 MMF } DUAL
C12 40-100 MMF } P-11939
C13 40-100 MMF } DUAL
C14 40-100 MMF } P-11939
C15 100 MMF MOULDED
C16 .01 MF 180 V.
C17 50 MMF MOULDED
C18 .01 MF 180 V.
C19 12 MF 25 V. DRY ELECTROLYTIC P-45X207
C20 .10 MF 180 V.
C21 30 MF 50 V. WET ELECTROLYTIC P-44X25
C22 .25 MF 180 V.
C23 25 MF 180 V.

R1 100 000 OHM .2 W
R2 450 OHM .2 W.
R3 30 000 OHM .2 W.
R4 100 000 OHM .2 W.
R5 1.0 MEGOHM .2 W.
R6 350 OHM .2 W.
R7 6 000 OHM .2 W.
R8 .50 MEGOHM VOL. CONTROL P-36X213
R9 50 000 OHM .2 W.
R10 2.0 MEGOHM .2 W.
R11 80 000 OHM .2 W.
R12 1.0 MEGOHM .2 W.
R13 400 OHM 2 W.
R14 180 OHM 1.0 W.
R15 75000 OHM TONE CONTROL
R16 47 OHM 4.0 W ARMORED WIRE WOUND

T1 ANTENNA INTERSTAGE TRANS. P-36452
T2 INTERSTAGE R.F. TRANS P-36453
T3 OSC. INDUCTORS
T4 1ST I.F. TRANS.
T5 2ND I.F. TRANS.
T6 INPUT TRANS.
T7 OUTPUT TRANS

L1 FILTER REACTOR P-52X33
L2 SPEAKER FIELD 180 OHM.

©John F. Rider, Publisher

MODEL 62-229
Alignment, Parts
Drive Cord & Noise Data

MONTGOMERY-WARD & CO.

Alignment and Calibration

I. F. Adjustment

Set the signal generator for a signal of 175 KC.

Connect the output lead of the signal generator through a .1 mf. condenser to the grid of the 1st detector.

Connect the ground lead of the receiver to the ground post of the signal generator.

Turn the volume control to the maximum position.

Then adjust the four I.F. trimmers until maximum output is obtained. The adjusting screws for these condensers are reached from the top of the chassis, and the location is shown in Fig. 4.

As stated above, use a non-metallic screwdriver to make the adjustments.

1750 KC Adjustment

Set the signal generator for 1750 KC.

Turn the rotor of the tuning condenser to the full open position.

Connect the antenna lead of the signal generator to the antenna lead of the receiver through a 200 mmf. condenser.

Keep the volume control at the maximum position.

Adjust the trimmer of the oscillator section of the three gang condenser until maximum output is obtained. The location of this trimmer is shown in Fig. 4.

1500 KC Adjustment

Set the signal generator for 1500 KC.

Turn the rotor of the tuning condenser carefully until maximum output is obtained.

Loosen the pointer screw and set the pointer at the 1500 KC mark on the dial scale. Retighten the pointer screw.

Adjust the 1st detector and antenna trimmers for maximum output.

Do not change the setting of the oscillator trimmer.

32 Volt Power Supply

This receiver is designed for use on farms and in those places where the power supply consists of a 32 volt direct current generating plant.

Polarity of Power Supply

There is a red mark on the plug at the end of the power supply cord of the receiver. The prong of the plug at which the red mark is placed must be plugged into the positive side of the line.

Use a receptacle on the 32 volt line from which the plug will not have to be removed after it has once been inserted correctly.

If the polarity of the line is not known, that is, if it is not known which side of the line is positive, a meter may be used to indicate the polarity. A voltmeter of 50 volt range or up is used. Connect the meter across the line. If the pointer deflects correctly, then the positive post of the meter is connected to the positive side of the line.

If the polarity of the line is not known and there is no way of determining it, insert the power supply plug, turn on the set, advance the volume control and proceed to tune the receiver. If the tubes are all lighted and no sounds are heard from the speaker after the plug has been in two minutes, withdraw the plug, turn it around and re-insert it. This time sounds should be heard after the tubes have been heated up.

Caution

If used on any other type of power supply than 32 volt D.C., severe damage may be done to the receiver.

Do not turn the set on unless all of the tubes and the pilot lamps are in their proper sockets. Use only a No. 46 Pilot Lamp (6.3 volt .25 amp.).

Do not leave the plug inserted for more than five minutes if it is found that the set does not operate.

Line Voltage Range

The receiver will operate satisfactorily within a line voltage range of 25 to 42 volts.

Series Resistor

If the line voltage is higher than 42, it will be necessary to use a series resistor to cut it down. If the voltage varies, a variable resistor may be required.

Starting Current

When first turned on the drain for a few seconds is slightly higher than normal until the tubes heat up. Some automatic plants are adjusted to start under a load of 200 to 300 watts. If a number of devices such as lights or motors are being used and the radio set is turned on the total drain may be sufficient to start the plant.

Replacing Drive Cord

Take off the station pointer by removing the screw at the center of the dial.

Remove the pilot lamp assembly by pulling the socket clips upward off the dial assembly.

Loosen the dial assembly by removing the two screws which secure this assembly to the chassis brackets.

Then lay the complete dial assembly face down in front of the chassis. It is not necessary to remove the volume control and tone control collars which hold the indicator cords of these two controls in position.

Turn the drive drum until the opening in this drum is approximately vertical and with the hole at the top as shown in Fig. 6.

Remove the tension spring and the old drive cord.

See that the eyelet is in the hole in the drive drum as shown in Fig. 6. Insert one end of the new drive cord from the outside through this eyelet in the drive drum.

Tie the end of the cord which has been inserted through the eyelet to one end of the tension spring.

Wrap the cord in a counter clockwise direction (facing front of chassis) around the drive drum approximately one and one-quarter turns progressing toward the front.

Then tilt the chassis up on its back panel and bring the cord mentioned in the previous paragraph down to the drive shaft. Wrap this cord directly below the drive drum three and one-half turns around the drive shaft, as shown in Fig. 6, progressing toward the back of chassis.

Then bring this cord up to the drive drum and wrap it around the drum in back of cord already on the drum until it is up to the eyelet as shown in Fig. 6.

Now insert the free end of the cord through the hole in the eyelet and tie it to the end of the spring. The end of the spring when hanging free and with all slack removed from the drive cord should be ¾" or less from the flange of the drum, as shown in Fig. 6. Cut off the surplus length of cord after it is tied to the spring.

Then secure the other end of the tension spring over the spur on the drive drum.

Turn the drive shaft back and forth several times.

Replace the dial assembly, pointer and pilot lamp assembly.

Eliminating Ignition and Generator Noise

After the receiver is in working order, the following procedure must be followed in practically all cases to eliminate ignition and generator noise caused by the charging plant. If the charging plant causes no noise, then of course, these steps do not have to be taken.

One spark plug suppressor must be placed on each spark plug of the engine. One spark plug for example would be required on a one-cylinder engine and four must be used on a four-cylinder engine. To connect the spark plug suppressor, remove the wire from the top of the plug, put the suppressor on and attach the wire to the other end of the suppressor.

A generator condenser must be used. This consists of two .1 mfd. sections in one unit. The two sections have one side grounded to the metal case of the condenser. Mount the condenser on the frame of charging plant. This will ground it. Then connect the two leads to the charging switch, one on each side of the line.

In some large installations, where the charging unit is on only two or three times a week, the above steps do not have to be taken, as interference is only caused when the generating plant is in operation.

PRICES SUBJECT TO CHANGE WITHOUT NOTICE

Noisy Operation

Noisy operation may be due to a faulty antenna system. The action of the automatic volume control, due to the low pickup, causes the set to operate at its maximum sensitivity, thereby increasing noisy reception due both to external pickup and internal conditions.

The receiver may be partially detuned, causing it to operate at maximum sensitivity. The signal should be very carefully tuned in until it is clearest and strongest.

If the reception is noisy only when the generating plant is in operation, then the noise is due to the latter and several things can be done. There may be loose parts in the generator plant rubbing together. Tighten up all parts and be sure that all parts of the engine are well grounded. Dirty spark plugs may cause noise. Clean and respace the plugs or try out a new set. In some instances it may be necessary to filter the power supply line to the receiver.

If any motor driven devices, such as pumps, are operated from the 32 volt line, the motor may cause noisy reception in the receiver. This can be corrected in most cases by connecting one of the dual .5 mfd. condensers mentioned above across the line at the motor. The common connection to the two condensers which is grounded to the can is grounded externally by mounting the unit on the motor frame.

CAUTION--Read the Following

To avoid the danger of damage to the receiver and accidental short circuit, the following facts should be understood.

The metal chassis is connected to one side of the line--See Fig. 2. 32 volt lines are generally grounded on one side--either side may be used. If the side of the line, not connected to the metal chassis, is grounded and the metal chassis comes in contact with the external ground, the line will be short circuited and an excessive current may result.

In any service work, therefore, on this chassis keep it on a wood or other insulated surface. Disconnect the antenna and ground leads to avoid the possibility of any external ground contacts with the chassis. The person working on the set should avoid coming in contact with any ground

Replacement Parts List

TRANSFORMERS AND COILS

Part No.	Code	Description	Selling Price
P-9A451	T1 & T2	Antenna & Interstage Transformer and Can Assembly Complete	$1.16
P-9A452	T1	Antenna R.F. Transformer Only	.72
P-9A453	T2	Interstage R.F. Transformer Only	.36
P-1A38		Dual Coil Can Assembly for above Transformers Only	.08
P-9A464	T3	Oscillator Coil and Can Assembly	.36
P-9A455	T4	1st I.F. Transformer and Can Assembly	.72
P-9A456	T5	2nd I.F. Transformer and Can Assembly	.52
P-9BX22	T6	Audio Input Transformer	.88
P-51X23	T7	Audio Output Transformer (Part of 6" Speaker Assembly 12AX19—May be Purchased Separately)	1.18
P-51X38	T7	Audio Output Transformer (Part of 6" Speaker Assembly 12AX20—May be Purchased Separately)	1.18
P-52X33	L1	Filter Choke (Iron Core)	.56

RESISTORS

Part No.	Code	Resistance	Wattage	Type	Selling Price
P-A5304	R1	300,000 Ohms	0.2	Carbon	.$ .16
P-A9454	R2	1,000,000 Ohms	0.2	Carbon	.08
P-A9459	R3	1,000,000 Ohms	0.2	Carbon	.16
P-A5304	R4	300,000 Ohms	0.2	Carbon	.16
P-A9458	R5	2.2 Megohms	0.2	Carbon	.08
P-A9455	R6	1,000 Ohms	0.2	Carbon	.08
P-A9462	R7	6,000 Ohms	0.2	Carbon	.08
P-A5313	R8	500,000 Ohms	Volume Control & Switch		.80
P-A5300	R9	100,000 Ohms	0.2	Carbon	.16
P-A9285	R10	250,000 Ohms	0.2	Carbon	.16
P-A9461	R11	50,000 Ohms	0.2	Carbon	.16
P-A8305	R12	1.0 Megohm	0.2	Carbon	.16
P-A9460	R13	400 Ohms	0.2	Carbon	.08
P-C9281	R14	140 Ohms	1.0	Carbon	.16
P-40X289	R15	75,000 Ohms	Tone Control		.54
P-41X48	R16	67 Ohms	4.0	Armored Wire Wound	.18

CONDENSERS

Part No.	Code	Capacity	Voltage	Type	Selling Price
P-47X99	C1	250 mmf.		Moulded	$ .08
P-46X80	C2	0.05 mf.	180	Tubular	.08
P-46X80	C3	0.05 mf.	180	Tubular	.08
P-46X80	C4	Antenna Trimmer—Part of Gang Condenser			
P-46X80	C5	0.05 mf.	180	Tubular	.08
P-47X93	C6	Interstage Trimmer—Part of Gang Condenser			
	C7	35 mmf.		Moulded	.06
P-46X80	C8	Oscillator Trimmer—Part of Gang Condenser			
	C9	0.05 mf.	180	Tubular	.08
P-46X80	C10	0.05 mf.	180	Tubular	.08
P-47A89	C11	40-360 mmf.	1st I.F. Trimmer Condensers		.18
	C12	40-110 mmf.			
P-47A89	C13	40-360 mmf.	2nd I.F. Trimmer Condensers		.18
	C14	40-360 mmf.			
P-47X97	C15	100 mmf.		Moulded	.06
P-46X104	C16	0.01 mf.	180	Tubular	.08
P-47X96	C17	50 mmf.		Moulded	.06
P-46X104	C18	0.01 mf.	180	Tubular	.08
P-46X109	C19	12.0 mf.	25	Dry Electrolytic	.54
P-46X98	C20	0.05 mf.	180	Tubular	.10
P-46X95	C21	30.0 mf.	50	Wet Electrolytic	.49
P-46X99	C22	0.25 mf.	180	Tubular	.39
P-46X115	C23	0.25 mf.	180	Tubular	.12
P-14A15	3 Section Gang Condenser				1.58

DIAL AND DRIVE ASSEMBLY

Part No.	Description	Selling Price
P-5A38	Dial and Drive Assembly Complete—Less Gang Condenser (Includes all following items)	$1.90
P-26X83	Drive Drum and Hub Assembly Only	.14
P-15A32	Dial Bracket Only	.12
P-28X48	Torsion Springs Only	.04
P-26X39	Drive Cord Tension Spring	.02
P-46X31	20" Black Drive Cord	.10
P-26X215	Drive Shaft	.08
P-19X28	Hooke Shoe Lock to secure Drive Shaft	.04
P-46X96	Dial Strip	.32
P-46X36	Dial Clamps to secure above Dial Strip to Frame	.06
P-19X36	Large Double End Pointer	.04
P-13X49	Small Pointer	.04
P-10X48	16" Lengths Indicator Cord to drive shaft pointer	.19
P-29X28	String Collars to secure above drive cord to V.C. and Tone Control & Tone Control shafts	.04

INTERFERENCE ELIMINATION PARTS

Part No.	Description	Selling Price
P-21A7	Spark Plug Suppressor	$ .25
P-47X34	Dual 0.5 mf. Generator Condenser	.60

MODEL 62-229
Voltage, Socket
Resistance, Coil Data

MONTGOMERY-WARD & CO.

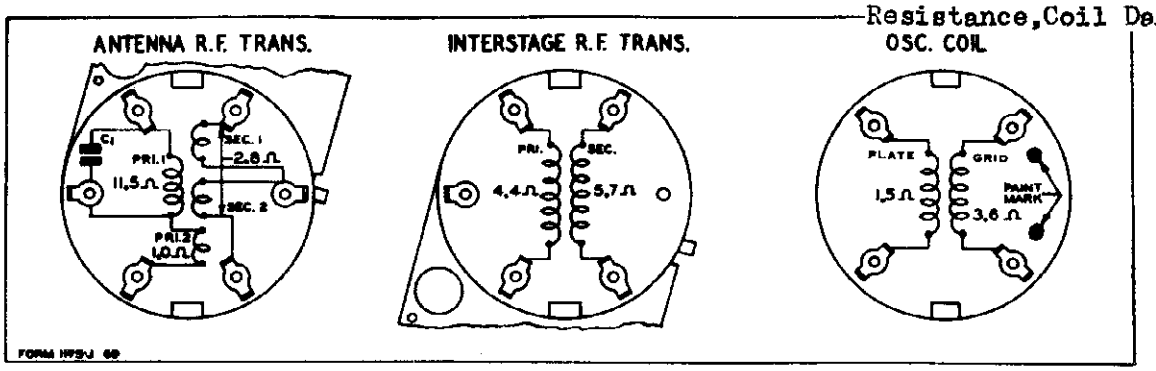

Fig. 3—R.F. and Oscillator Coil Base Terminal Arrangement and D. C. Resistance of Windings

D. C. Resistance of Windings

Refer to Fig. 3

Following are the D. C. resistances of the various windings in the chassis. The values given below will vary slightly in different sets.

Part No.	Winding	Code	D. C. Resistance in Ohms
P-9A452	Antenna R.F. Transformer	T1	
	Primary No. 1		11.5
	Primary No. 2		1.0
	Secondary Windings in Series		2.8
P-9A453	Interstage R.F. Transformer	T2	
	Primary Winding		4.4
	Secondary Winding		5.7
P-9A454	Oscillator Coil	T3	
	Grid Coil		3.6
	Plate Coil		1.5
P-9A455	1st I.F. Transformer	T4	
	Primary Winding		102.0
	Secondary Winding		99.
P-9A456	2nd I.F. Transformer	T5	
	Primary Winding		101.
	Secondary Winding		102.
P-50X22	Audio Input Transformer	T6	
	Primary Winding		380.
	Secondary Winding		
	Center Tap to Inside		85.
	Center Tap to Outside		95.
P-12A219	Dynamic Speaker		
	Speaker Field	L2	100.
	Speaker Voice Coil		3.1
	Audio Output Transformer (51X23)	T7	
	Primary Winding		
	Center Tap to Inside		152.
	Center Tap to Outside		176.
	Secondary Winding		1.4
P-52X33	Filter Choke	L1	50.

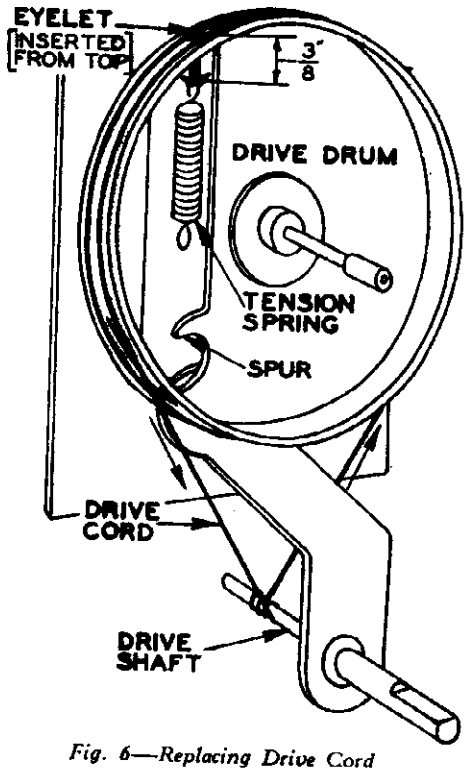

Fig. 6—Replacing Drive Cord

VOLTAGES AT SOCKETS
Volume Control at Maximum — Antenna Connected to Ground LEAD

Type of Tube	Function	Across Heater	Plate to Ground	Screen to Ground	Cathode to Ground	Normal Plate MA.
6D6	R.F.	6.4	31	31	2	1.5
6A7	1st Det. & Osc.	6.4	31 31(1)	18	2	.2 .65(1)
6D6	I.F.	6.4	31	31	2	1.5
85	2nd Det.	6.4	12.5		1.8	.20
43	1st Audio	25.6	28	31	3.5	7
6A6	Output	6.4	31		0	11 per plate)

(1) Anode Grid

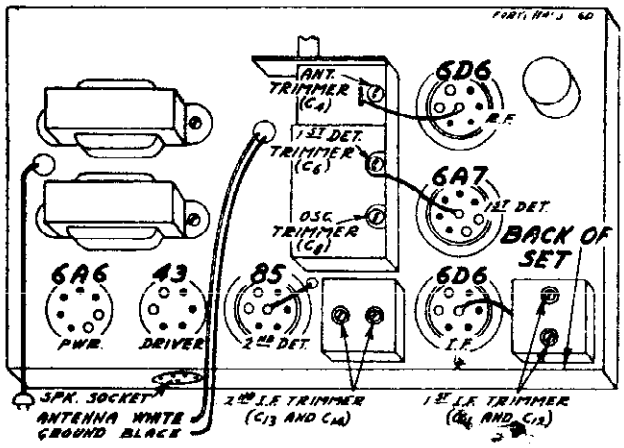

Fig. 4—Tube Arrangement

©John F. Rider, Publisher

MODEL 62-233
Schematic, Socket
Trimmers, Alignment

MONTGOMERY-WARD & CO.

TUBES:

The Tube complement of this chassis is as follows:

1 Type 6A7—pentagrid electron coupled oscillator and first detector.
1 Type 6D6—remote cut-off pentode as I.F. amplifier.
1 Type 6B7—duplex diode pentode as diode detector, A.V.C. and A.F.
1 Type 42—pentode output tube.
1 Type 80—high vacuum rectifier.

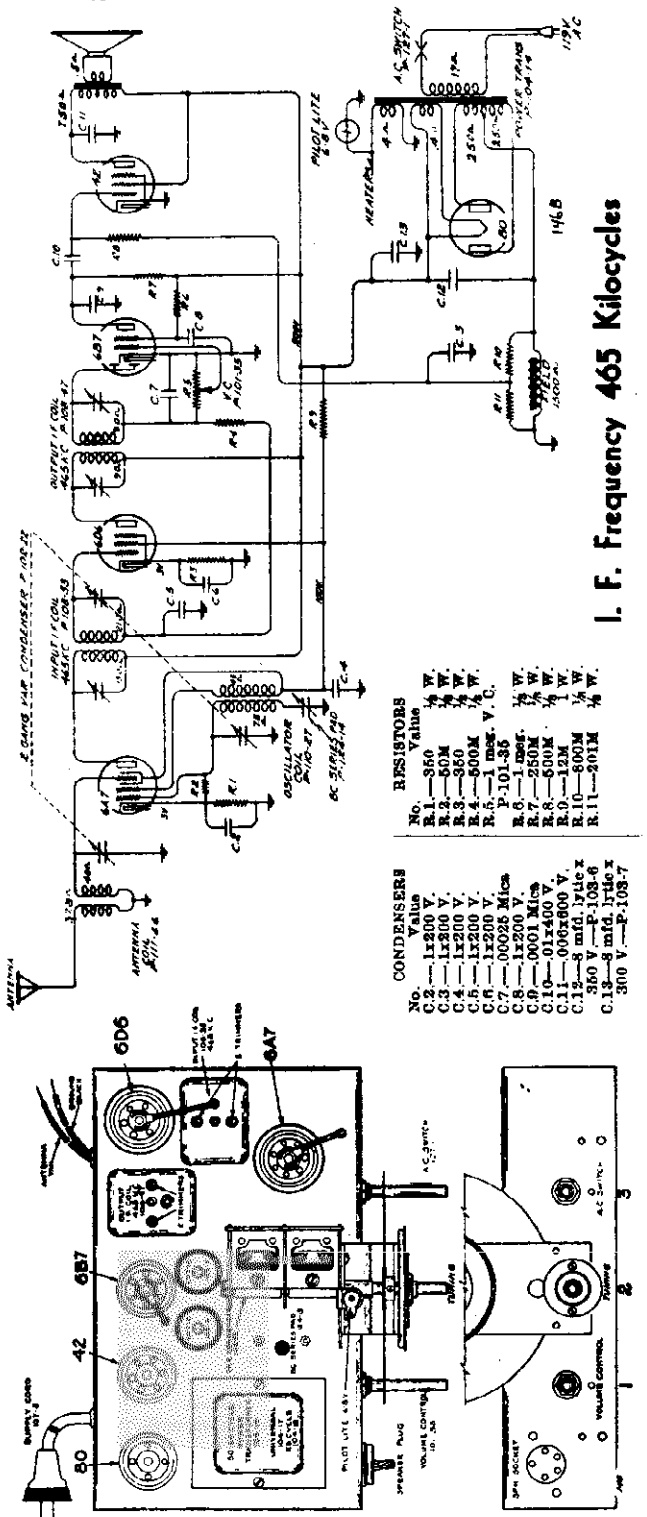

Voltages taken from different points of circuit to chassis are measured with volume control full on, all tubes in their sockets and speaker connected, with a voltmeter having a resistance of 1000 ohms per volt. These voltages are clearly indicated on the circuit diagram.

All voltages are measured with 119 volts on the primary of the power transformer.

Resistance of coils and transformer windings are indicated in ohms on schematic circuit diagram.

Transformers are available and chassis are sometimes equipped with universal transformers for operation on 40 and 60 cycles and with primary taps for 108, 125, 150, 220 and 250 volts (see illustrations) and also sometimes equipped with 25 cycle transformers with 105-115 volt or 220 volt primaries, not universals.

Aligning Instructions

Description of various dummy antennas used and referred to in these instructions:

(1) I.F. Dummy—Consists of a .1 mfd. condenser connected in series with the external oscillator.

(2) Broadcast Dummy—Consists of a 200 mmfd. condenser and a 20 ohm resistor connected in series with each other and in series with the external oscillator.

RESONANCE INDICATOR:

Use as a resonance indicator an output meter connected across the primary of the speaker input transformer, or by means of an adapter between the plate and screen terminals of the type 42 output tube. Maximum deflection of the meter indicates resonance. Use only enough signal to get a readily readable output. A low range output meter or the low scale of a multi-range voltmeter should be used.

ALIGNMENT:

No aligning adjustments should be attempted without first thoroughly checking over all other possible causes of trouble, such as poor installations, open or grounded antenna systems, low line voltages, defective tubes, condensers and resistors. In order to align this chassis properly, an oscillator (generator) is absolutely necessary. No aligning adjustments should be attempted with the chassis in the cabinet. To remove the knobs, pull them off. To take the chassis out of the cabinet, remove the three bolts by which it is fastened and the speaker plug which you will find on the front flange of the chassis panel.

Aligning I. F. Transformers

1. With gang condenser in its minimum capacity position, and plates entirely out of mesh, connect an external oscillator in series with broadcast dummy antenna to tan antenna and black ground leads and make the following adjustments:
   (a) Connect external oscillator which has been adjusted to 465 kilocycles in series with I.F. dummy antenna, to the control grid cap of the type 6D6 tube and chassis ground. Adjust output I.F transformer, part number 108-47, to resonance.
   (b) Move generator output clip from grid of 6D6 to grid cap of 6A7 tube and align input I.F. transformer, part number 108-53.
   (c) With generator connected to grid of type 6A7 tube, readjust output I.F. transformer, part number 108-47, to resonance.

R. F. Alignment— (530 - 1720 Kilocycles)

1. With gang condenser in its minimum capacity position, plates entirely out of mesh, connect an external oscillator in series with broadcast dummy antenna to tan antenna and black ground leads and make the following adjustments:
   (a) With external oscillator set at 1720 kilocycles, adjust oscillator trimmer, (rear of gang condenser).
   (b) Re-set external oscillator to 1400 kilocycles, rotate condenser, pick up oscillator signal and adjust antenna trimmer to resonance, (front section of gang condenser).
   (c) Re-set external oscillator to 600 kilocycles and adjust series pad to resonance, rotate condenser and move dial pointer to 600 kilocycles by gently rocking condenser to and fro. Pick up oscillator signal while adjusting series pad to resonance, maximum deflection on an output meter. This adjustment is accessible from the top of the chassis and is located between variable condenser and power transformer.

25 Cycle Chassis differ only from 60 cycle chassis in that part number 104-18 transformer is used in place of 50/60 cycle transformer, part number 104-14.

MONTGOMERY-WARD & CO.

MODELS 62-235, 62-248
Schematic, Voltage
Socket, Trimmers

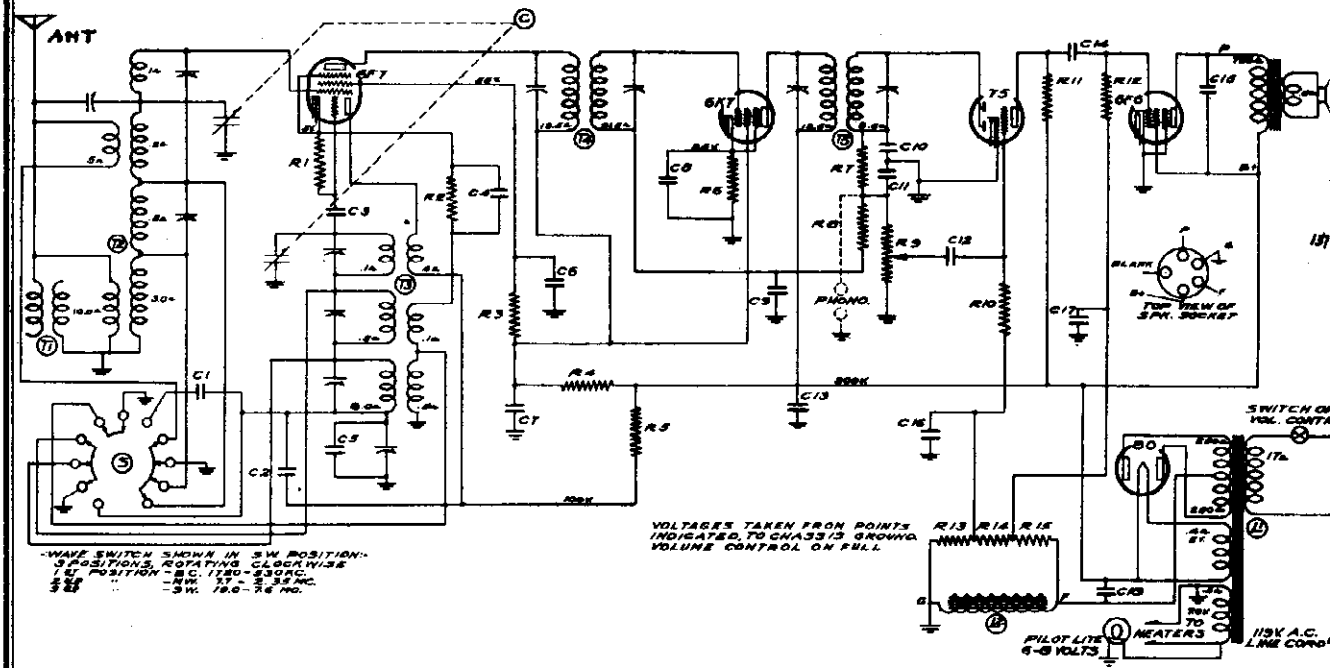

C.6, C.8 in dual unit P-118-1
C.7, C.9 in dual unit P-118-1
C. 16, C. 17 in dual unit P-118-1

Numbers prefixed by letter "P" are part Nos.

Voltages taken from points indicated to chassis ground. Volume control on full.

Wave switch P-125-6, 3 positions rotating clockwise:
1st position—BC. 1720—530 KC.
2nd position—MW. 7.7—2.35 MC.
3rd position—SW. 19.0—7.6 MC.

Switch shown at SW. position

Serial No. 5G136270D and up

CONDENSERS

No.	Value	No.	Value
C.1	3000 mmf	C.11	100 mmf mica
C.2	.1x300v	C.12	.05x300v
C.3	100 mmf mica	C.13	8.0 mfdx300v (P-103-7)
C.4	.1x300v	C.14	.01x400v
C.5	380 mmf	C.15	.006x600v
C.6	.1x300v	C.16	.1x300v
C.7	.1x300v	C.17	.1x300v
C.8	.1x300v	C.18	8.0 mfdx350v (P-103-6)
C.9	.1x300v		
C.10	100 mmf mica		

RESISTORS

No.	Value
R.1	50M 1/2w
R.2	700 1/2w
R.3	100M 1/2w
R.4	25M 1/2w
R.5	30M 1/2w
R.6	250 1/2w
R.7	50M 1/2w
R.8	800M 1/2w
R.9	500M vol. cont.
R.10	1 meg 1/2w
R.11	250M 1/2w
R.12	250M 1/2w
R.13	15M 1/2w
R.14	180M 1/2w
R.15	800M 1/2w

TUNING RANGE—

Standard Broadcast Band
530-1720 Kilocycles.

Intermediate Band
2350-7700 Kilocycles.

Short Wave Band
7.6-19.0 Megacycles.

I. F. FREQUENCY 465 K. C.

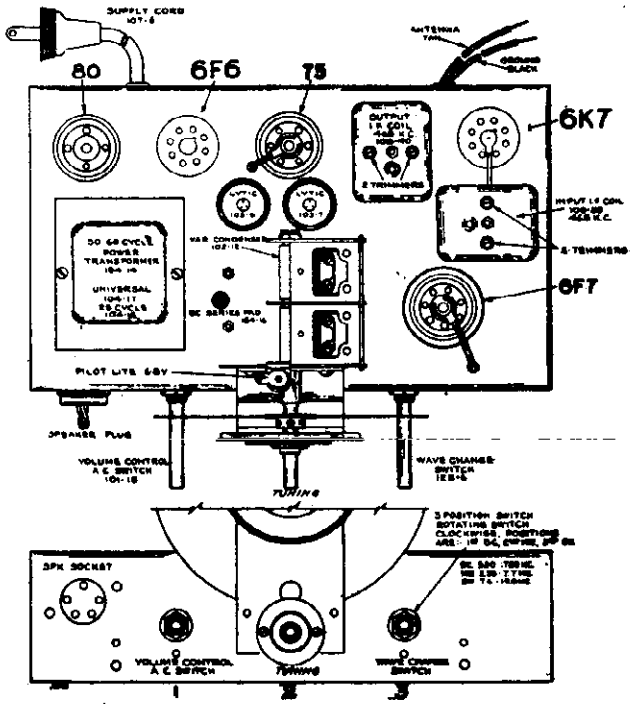

BOTTOM VIEW OF CHASSIS

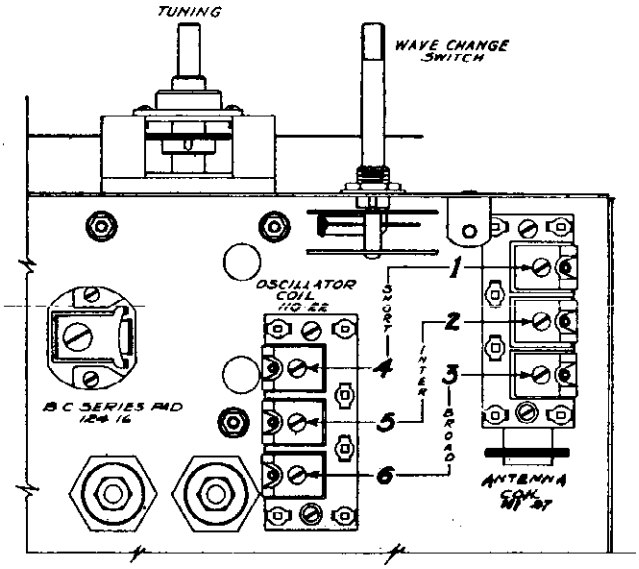

© John F. Rider, Publisher

MODELS 62-235, 62-248
Alignment

MONTGOMERY-WARD & CO.

DESCRIPTION

The Tube complement of this chassis is as follows:
1 Type 6F7—triode pentode as oscillator and first detector.
1 Type 6K7—remote cut-off pentode as I.F. amplifier.
1 Type 75—duplex diode triode as diode detector, A.V.C. and A.F.
1 Type 6F6—pentode output tube.
1 Type 80—high vacuum rectifier.

Transformers are available and chassis are sometimes equipped with universal transformers for operation on 40 and 60 cycles and with primary taps for 108, 125, 150, 220 and 250 volts (see instructions) and also sometimes equipped with 25 cycle transformers with 105-115 volt or 220 volt primaries, not universals.

ALIGNING INSTRUCTIONS

No aligning adjustments should be attempted without first thoroughly checking over all other possible causes of trouble, such as poor installations, open or grounded antenna systems, low line voltages, defective tubes, condensers and resistors. In order to properly align this chassis, an oscillator (generator) is absolutely necessary. No aligning adjustments should be attempted with the chassis in the cabinet. To remove the knobs, pull them off and to take the chassis out of the cabinet, remove the three bolts by which it is fastened and the speaker plug which you will find on the front flange of the chassis panel.

Aligning I. F. Transformers

1. With volume control full on, the extreme right of its rotation, and with wave changing switch in the broadcast position, extreme left of its rotation, and with variable condenser at its minimum capacity position, plates entirely out of mesh, adjust the I.F. transformers (two adjustments at the top of parts number 108-38 and 108-40—see top view).
   (a) Connect external oscillator which has been adjusted to 465 kilocycles in series with I.F. dummy antenna, to the control grid cap of the type 6K7 tube and chassis ground. Adjust output I.F. transformer, part number 108-40, to resonance.
   (b) Move generator output clip from grid of 6K7 to grid cap of type 6F7 tube and align input I.F. transformer, part number 108-38.
   (c) With generator connected to grid of type 6F7 tube, readjust output I.F. transformer, part number 108-40, to resonance.

Broadcast Band Alignment—
(540 - 1720 Kilocycles)

1. With wave changing switch in the broadcast position, extreme left of its rotation, and with gang condenser in its minimum capacity position, plates entirely out of mesh, connect an external oscillator in series with broadcast dummy antenna to tan antenna and black ground leads and make the following adjustments:
   (a) With external oscillator set at 1720 kilocycles, adjust oscillator trimmer to resonance, for location of this adjustment, number 6, see diagram.
   (b) Re-set external oscillator to 1400 kilocycles, rotate condenser, pick up oscillator signal and adjust antenna trimmer to resonance. For location of this adjustment, number 3, see diagram.
   (c) Re-set external oscillator to 600 kilocycles and adjust series pad to resonance, rotate condenser and move dial pointer to 600 kilocycles by gently rocking condenser to and fro. Pick up oscillator signal while adjusting series pad to resonance, maximum deflection on an output meter. This adjustment is accessible from the top of the chassis and is located between variable condenser and power transformer, see top view—part number 124-16.
   (d) Check for tracking and sensitivity at 1000 kilocycles.

NOTE (Series "B", "C" and "D" only)

Short Wave Band Alignment—
(7.6 - 19.0 Megacycles)

1. This band is aligned after the I.F. adjustments have been completed. Set wave changing switch to short wave position, extreme right of its rotation, set dial pointer to 18 megacycles.
   (a) With external oscillator adjusted to 18 megacycles and connected in series with short wave dummy antenna to tan antenna and black ground leads, adjust the oscillator short wave trimmer until generator signal is picked up. For location of this adjustment, number 4, see diagram.
   (b) Adjust short wave antenna trimmer to resonance. For location of this adjustment, number 1, see diagram.
   (c) Re-set external oscillator to 9 megacycles, rotate condenser, move dial pointer to 9 megacycles and check for tracking and sensitivity. Do not bend plates. NOTE: It is extremely necessary in making all of the above adjustments that the fundamental signal of the oscillator be tuned in and not the image frequency, which will fall below the fundamental.

Intermediate Band Alignment—
(2.35 - 7.7 Megacycles)

1. With wave changing switch in center position, and with dial pointer set to 7 megacycles, make the following adjustments:
   (a) With external oscillator set at 7 megacycles and connected in series with short wave dummy antenna, as for short wave adjustments, adjust trimmer of oscillator coil, part number 110-22 until 7 megacycle signal is picked up. For location of this adjustment, number 5, see diagram.
   (b) Adjust antenna trimmer to resonance, adjustment number 2, see diagram.
   (c) Re-set external oscillator to 2.5 megacycles (2500 kilocycles), rotate variable condenser, move pointer, pick up oscillator signal and check for tracking and sensitivity. NOTE: It is extremely necessary in making all of the above adjustments that the fundamental signal of the oscillator be tuned in and not the image frequency, which will fall below the fundamental.

Voltages taken from different points of circuit to chassis are measured with volume control full on, all tubes in their sockets and speaker connected, with a volt meter having a resistance of 1000 ohms per volt. These voltages are clearly indicated on the circuit diagrams

IN ORDER TO PREVENT SIGNAL FROM ACTING UPON AVC AND AFFECTING ACCURACY OF VOLTAGE MEASUREMENTS, AERIAL AND GROUND LEADS SHOULD BE SHORT CIRCUITED WHILE MAKING MEASUREMENTS.

All voltages are to be measured with 119 volts on the primary of the power transformer.

Resistances of coils and transformer windings are indicated in ohms on schematic circuit diagrams.

25 Cycle Chassis differ only from 60 cycle chassis in that part number 104-18 transformer is used in place of 50/60 cycle transformer, part number 104-14.

©John F. Rider, Publisher

NOBLITT SPARKS INDUSTRIES

MODEL 18
Schematic, Parts
Voltage, Resistance
Coil Data

SCHEMATIC CIRCUIT DIAGRAM
ARVIN CAR RADIO MODEL 18

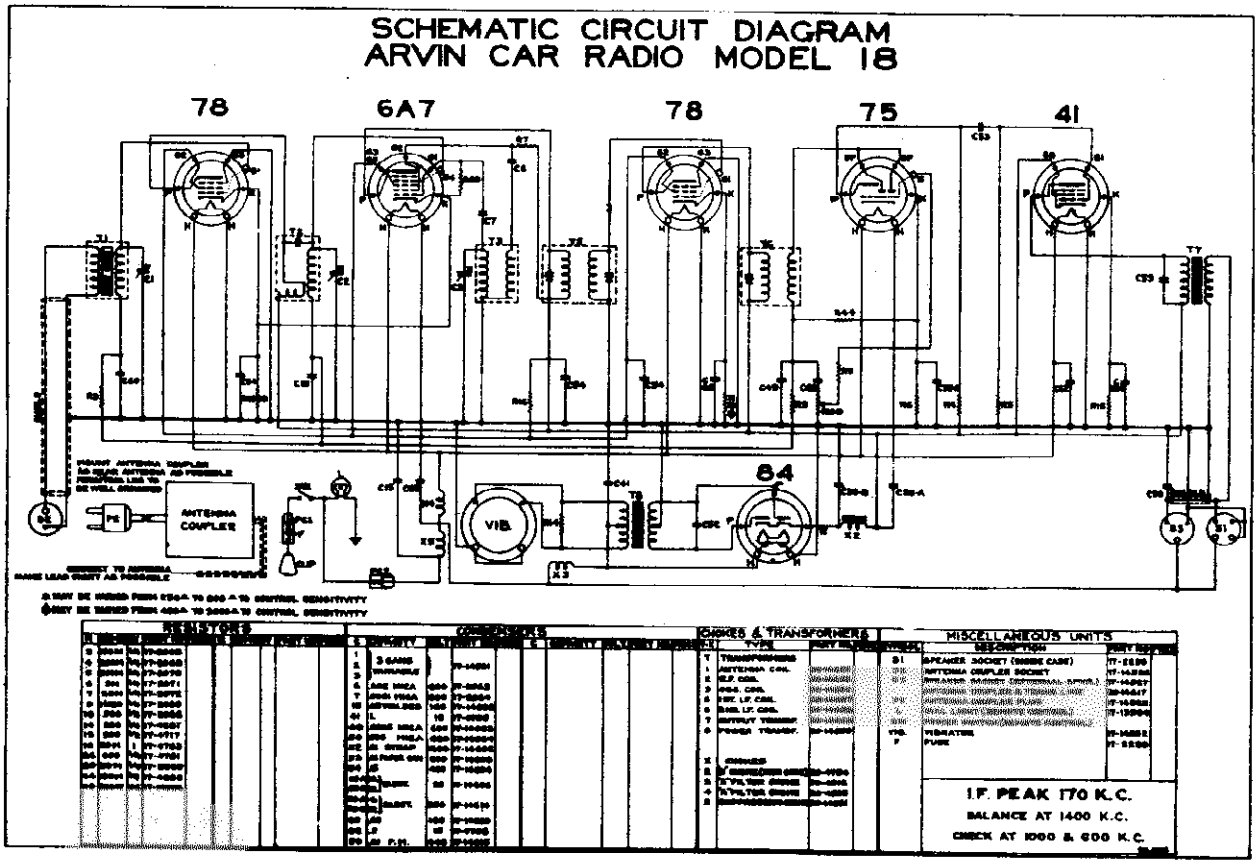

MODEL 18 SOCKET VOLTAGES

Tube	Heater	Cathode	Suppressor Grid	Screen Grid	Plate	†Oscillator Grid	Anode Grid	*Diode Plates
78	6.3	3.5	0	90	195	.....	.....	.....
6A7	6.3	3.5	.....	90	195	2-5	120	.....
78	6.3	2.3	0	90	195	.....	.....	.....
75	6.3	1.6	.....	.....	110	.....	.....	1.9
41	6.3	14.5	.....	195	192	.....	.....	.....
84	6.3	200.0	.....	.....	215	.....	.....	.....

†Measured at 1500 K. C.
*Measured with Vacuum Tube Voltmeter

POINT TO POINT RESISTANCES

78—R. F. Amplifier

Heater	0
Heater	∞
Cathode	600 Ω
Suppressor	0
Screen to B+	50,000 Ω
Plate to B+	35 Ω
Control Grid	1,250,000 Ω

6A7—1st Det. Oscillator

Heater	0
Heater	∞
Cathode	600 Ω
Osc. Grid	50,000 Ω
Anode Grid to B+	20,000 Ω
Screen Grid to B+	50,000 Ω
Plate to B+	115 Ω
Control Grid	1,150,000 Ω

78—I. F. Amplifier

Heater	0
Heater	∞
Cathode	500 Ω
Suppressor	0
Screen to B+	50,000 Ω
Plate to B+	85 Ω
Control Grid	115 Ω

75—2nd Dog.; 1st Audio

Heater	0
Heater	∞
Cathode	5,000 Ω
Diode	150,000 Ω
Diode	150,000 Ω
Plate to B+	200,000 Ω
Control Grid V.C. on	1,000,000 Ω
V.C. off	500,000 Ω

41—Power Output

Heater	0
Heater	∞
Cathode	500 Ω
Control Grid	500,000 Ω
Screen to B+	0
Plate to B+	685 Ω

84—Rectifier

Heater	0
Heater	∞
Cathode to B+	165 Ω
Plate	350 Ω
Plate	270 Ω
Plate to Plate	530 Ω

COIL AND TRANSFORMER RESISTANCES

Antenna Pri.	.72
Antenna Sec.	2.80
R. F. Coil Pri.	113.00
R. F. Coil Sec.	4.00
Oscillator Pri.	1.40
Oscillator Sec.	2.60
Plate I. F. Pri.	115.00
Plate I. F. Sec.	115.00
Second I. F. Pri.	85.00
Second I. F. Sec.	85.00
Output Tr. Pri.	625.00
Output Tr. Sec.	0.68
Power Tr. Pri.	.07
Power Tr. Sec.	250-270—530
"B" Choke	165.00
Antenna Coupler Pri.	6.30
Antenna Coupler Sec.	.50

©John F. Rider, Publisher

MODELS 28 & 33
Aligment

NOBLITT SPARKS INDUSTRIES

MODEL 18
Socket, Trimmers
Chassis, Alignment

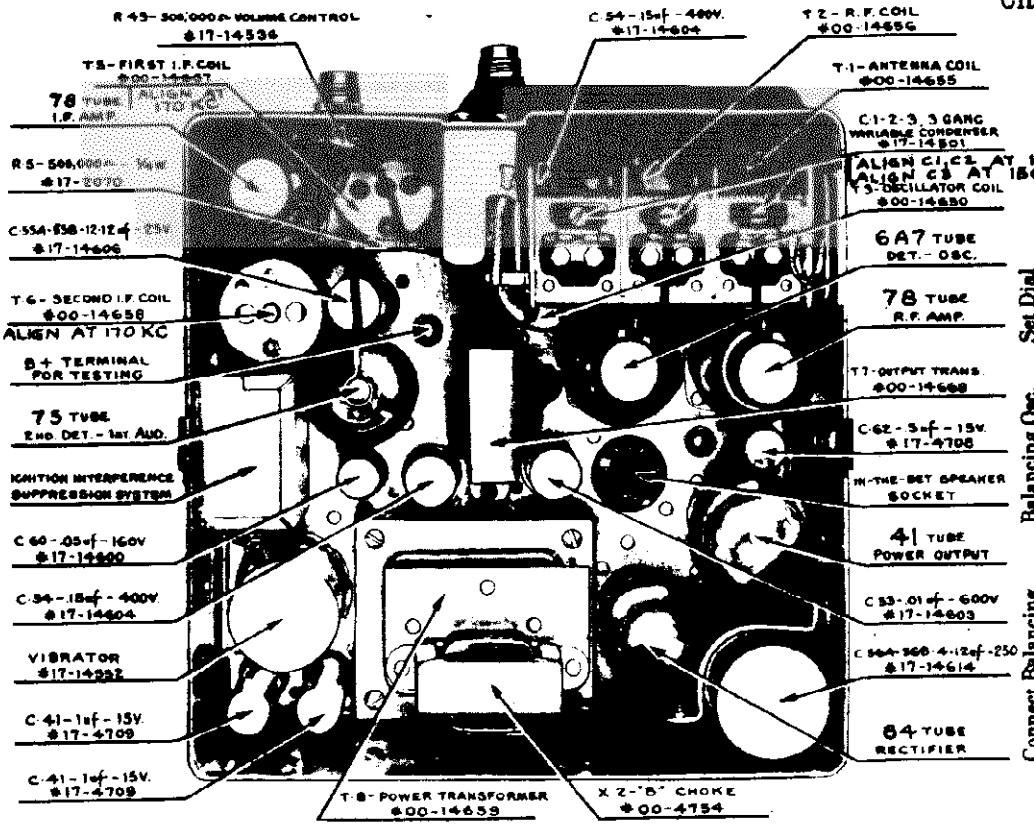

Padder No.	Connect Balancing Oscillator to	Balancing Osc. Frequency	Set Dial to
1	6A7 grid cap	170 K. C.	.....
2	6A7 grid cap	170 K. C.	.....
3	6A7 grid cap	170 K. C.	.....
4	Antenna Terminal of Transmission Line	1560 K. C.	1560 K. C.
5	Antenna Terminal of Transmission Line	1400 K. C.	1400 K. C.
6	Antenna Terminal of Transmission Line	1400 K. C.	1400 K. C.

BALANCING INSTRUCTIONS

MODELS 18-28-33

Use an output meter for all adjustments. All Models 18-28-33 Arvin Car Radios must be balanced in conjunction with an Arvin Type T Transmission line available to Service Stations at $1.50 list. Order from your jobber.

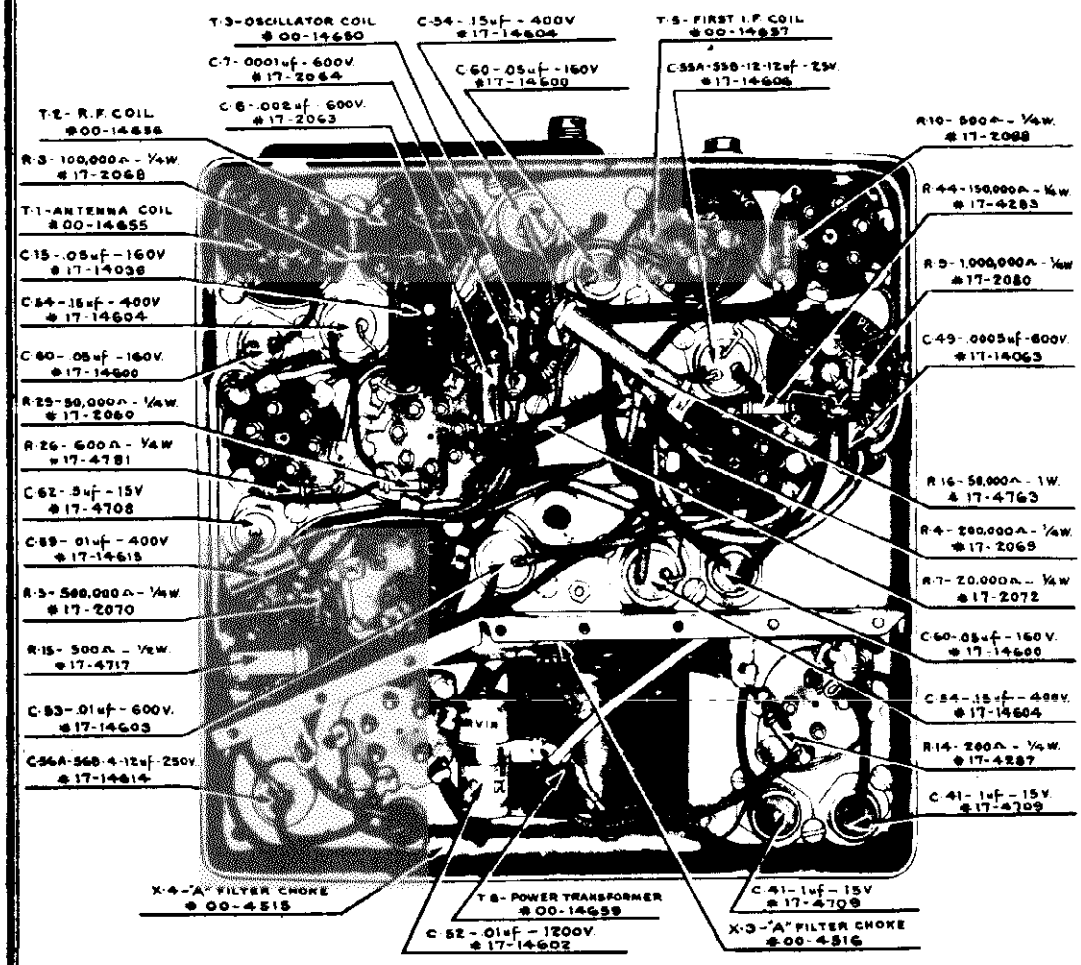

MODEL 33
Changes

NOBLITT SPARKS INDUSTRIES

MODEL 28
Schematic
Voltage
Resistance
Changes

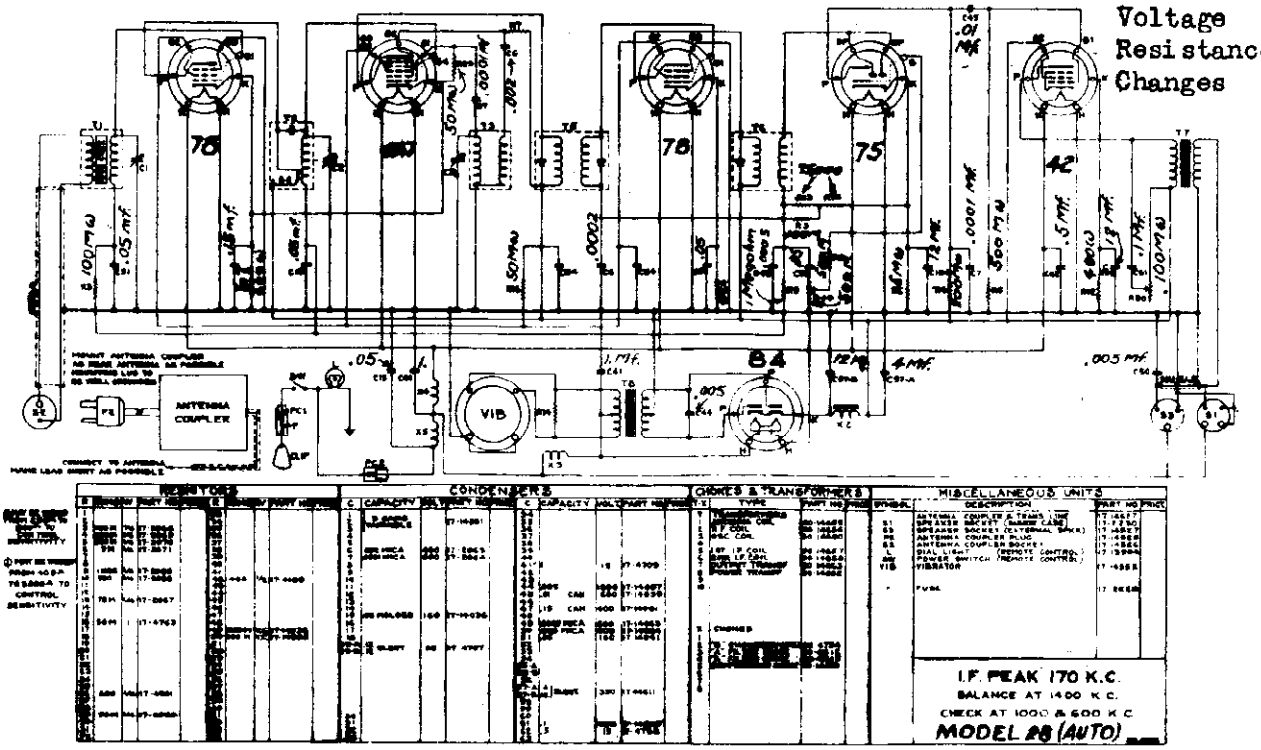

POINT TO POINT RESISTANCES

SEE INDEX FOR ALIGNMENT

78—R. F. Amplifier

Heater	0
Heater	∞
Cathode	600 Ω
Suppressor	0
Screen to B+	50,000 Ω
Plate to B+	85 Ω
Control Grid	1,255,000 Ω

6A7—1st Det. Oscillator

Heater	0
Heater	∞
Cathode	600 Ω
Osc. Grid	50,000 Ω
Anode Grid to B+	20,000 Ω
Screen to B+	50,000 Ω
Plate to B+	115 Ω
Control Grid	1,155,000 Ω

78—I. F. Amplifier

Heater	0
Heater	∞
Cathode	500 Ω
Suppressor	0
Screen to B+	50,000 Ω
Plate to B+	85 Ω
Control Grid	185,000 Ω

75—Det. 1st Audio

Heater	0
Heater	∞
Cathode	5,000 Ω
Diode	155,000 Ω
Diode	155,000 Ω
Plate to B+	200,000 Ω
Control Grid V.C. on	1,000,000 Ω
V.C. off	500,000 Ω

41—Power Output

Heater	0
Heater	∞
Cathode	500 Ω
Control Grid	500 000 Ω
Screen to B+	0
Plate to B+	625 Ω

84—Rectifier

Heater	0
Heater	∞
Cathode to B+	165 Ω
Plate	175 Ω
Plate	150 Ω
Plate to Plate	325 Ω

COIL AND TRANSFORMER RESISTANCES

Antenna Pri.	.72	Oscillator Sec.	2.60	Second I. F. Sec.	85.00
Antenna Sec.	2.80	First I. F. Pri.	115.00	Output Tr. Pri.	625.00
R. F. Coil Pri.	113.00	First I. F. Sec.	115.00	Output Tr. Sec.	0.40
R. F. Coil Sec.	4.0	Second I. F. Pri.	85.00	Power Tr. Pri.	.07
Oscillator Pri.	1.60				

Power Tr. Sec.	175-150-375				
"B" Choke	165.00				
Antenna Matching Tr. Pri.	6.20				
Antenna Matching Tr. Sec.	.50				

MODEL 28 SOCKET VOLTAGES

Tube	Heater	Cathode	*Diode Plate	*Diode Plate	Screen	Anode Grid	†Oscillator Grid
78	6.3	4.0	235		90		
6A7	6.3	4.0	235		90	160	3.5V
78	6.3	2.3	235		90		
75	6.3	1.6	120	2.0	.....	...	
41	6.3	16.0	230		235		
84	6.3	240	275				

*Measured with Vacuum Tube Voltmeter
†Reading taken at 1500 K. C.

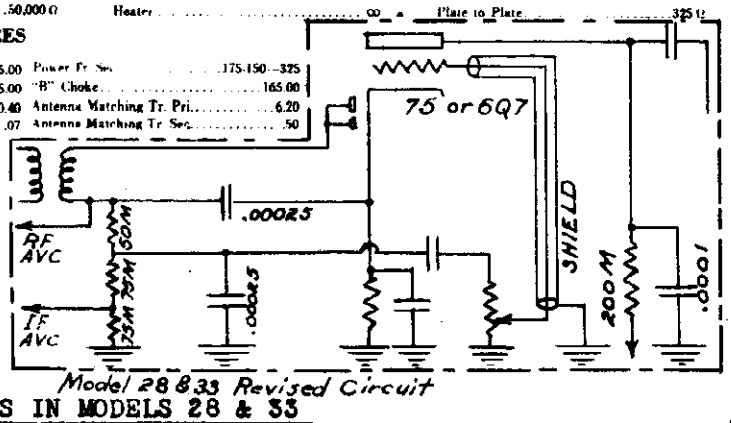

Model 28 & 33 Revised Circuit

CHANGES IN MODELS 28 & 33

50,000 OHM ¼ W res. added in series with two 75000 OHM res. originally in AVC ckt 500,000 OHM ¼ W res. removed from lead running bet. vol. cont. and grid cap of 75 or 6Q7 tube. Shield added over grid lead wire running from vol. cont. to grid cap of 6Q7 or 75 tube. .0005 mfd. Mica cond. bypassing AVC res. removed. Replaced by .00025 mfd. Mica cond. connected bet. brown lead of 2nd I.F. trans. and cathode of 75 or 6Q7. .0005 mfd. Mica cond. bypassing 75 or 6Q7 200,000 OHM plate res. removed. Replaced by .0001 mfd. Mica cond. .00025 mfd. Mica con. added to bypass junction of 50,000 OHM res. and 75,000 OHM res. in AVC network to ground. Shield added around 75 tube. Vol. cont. coupling cond. connected to junction of 50,000 OHM and 75,000 OHM res. instead of directly to brown lead of second I.F. transformer.

©John F. Rider, Publisher

MODEL 28
Socket, Trimmers
Chassis

NOBLITT SPARKS INDUSTRIES

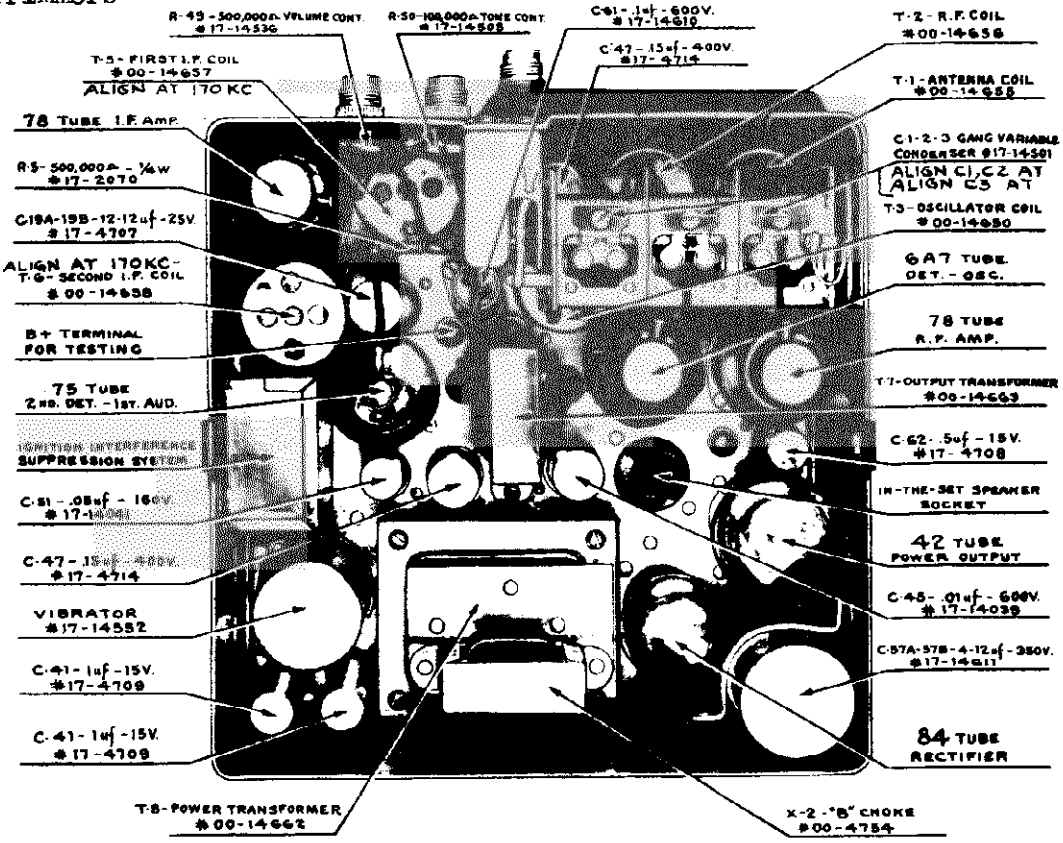

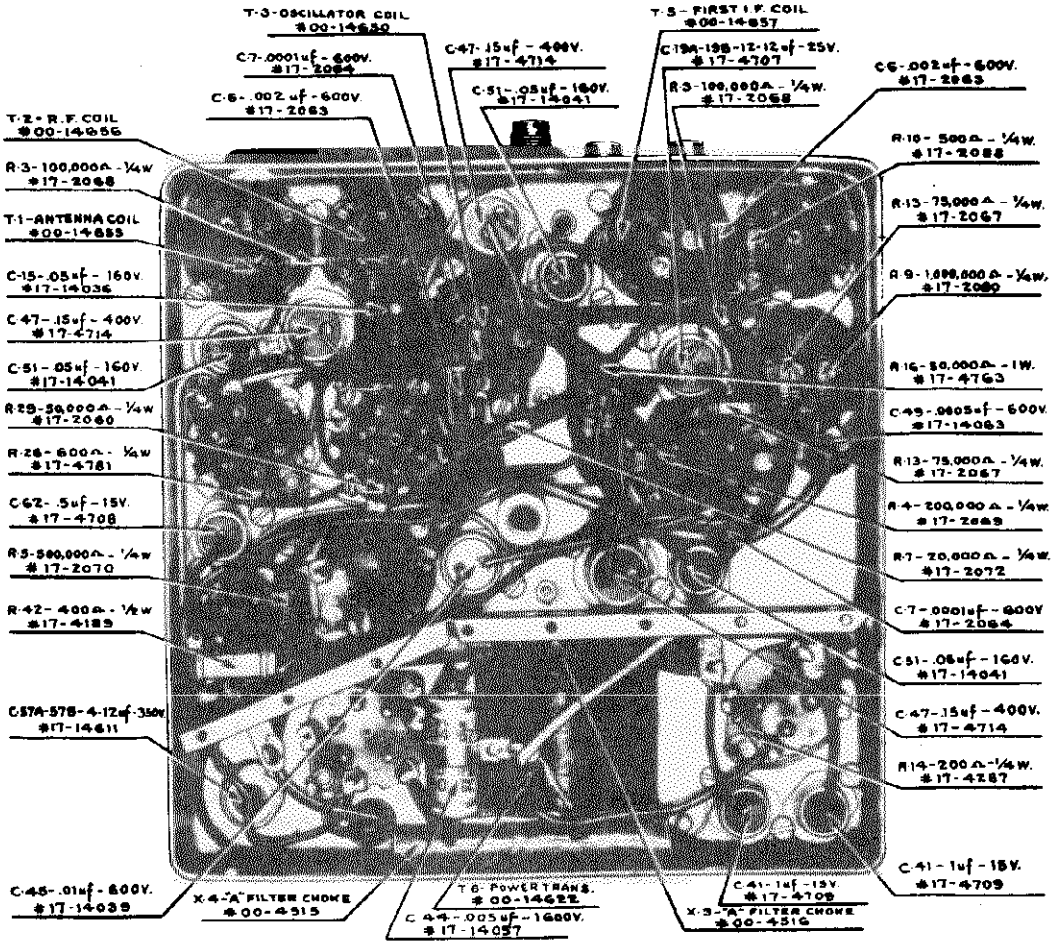

NOBLITT SPARKS INDUSTRIES

MODEL 33
Schematic, Voltage
Resistance, Coils
Parts

SCHEMATIC CIRCUIT DIAGRAM
ARVIN CAR RADIO - MODEL 33

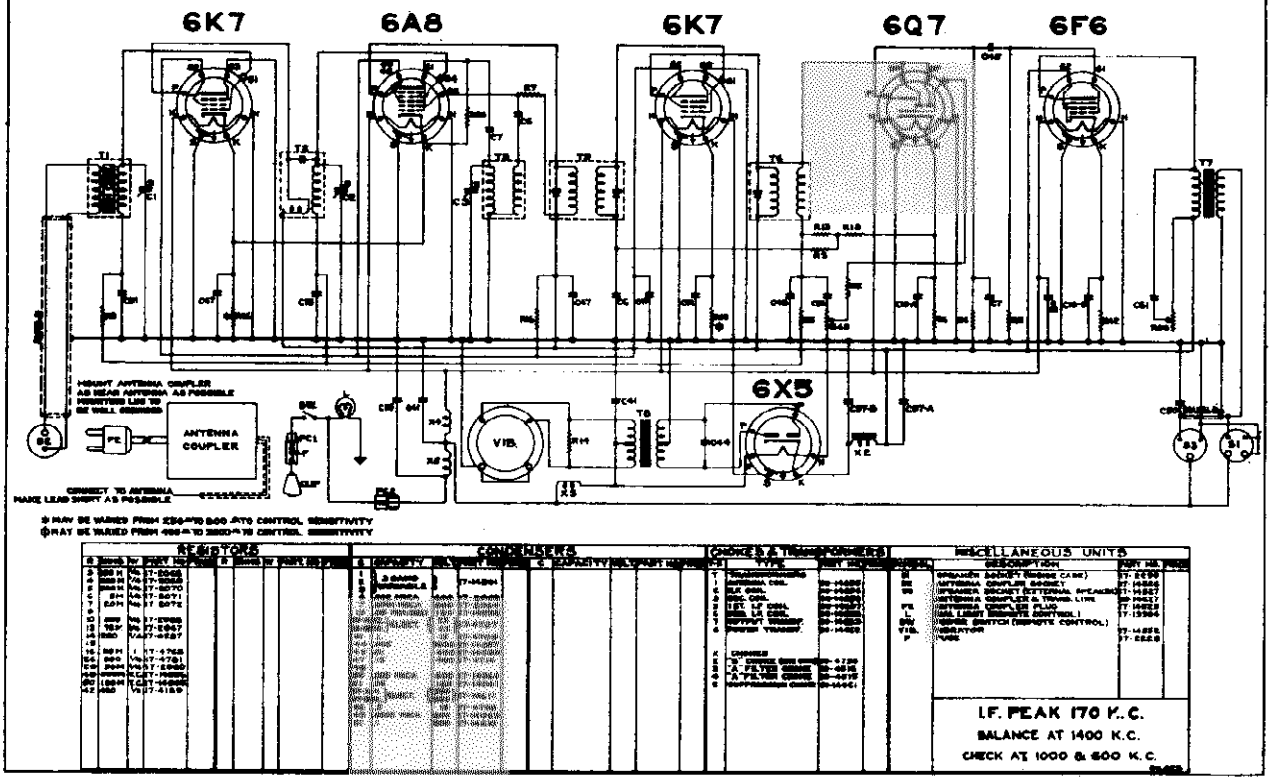

SEE INDEX FOR ALIGNMENT

MODEL 33 SOCKET VOLTAGES

Tube	Heaters	Cathode	Plate	Screen	Anode Grid	*Oscillator Grid—1500 K. C.	†*Diodes
6K7	6.3	4.0	235	90	.....	.....	.....
6A8	6.3	4.0	235	90	140	2.5	.....
6K7	6.3	2.7	235	90	.....	.....	.....
6Q7	6.3	2.3	120	.....	.....	.....	2.8
6F6	6.3	16.0	290	235	.....	.....	.....
6X5	6.3	240	365 A. C.	.....	.....	.....	.....

*Measured with Vacuum Tube Voltmeter
†No Signal

POINT TO POINT RESISTANCES

6K7—R. F. Amplifier

Heater	0
Shell	0
Heater	∞
Cathode	600 Ω
Suppressor Grid	0
Screen to B+	50,000 Ω
Plate to B+	35 Ω
Control Grid	1,255,000 Ω

6A8—1st Det. Oscillator

Heater	0
Shell	0
Heater	∞
Cathode	600 Ω
Oscillator Grid	50,600 Ω
Anode to B+	30,000 Ω
Screen to B+	50,000 Ω
Plate to B+	115 Ω
Control Grid	1,155,000 Ω

6K7—I. F. Amplifier

Heater	0
Shell	0
Heater	∞
Cathode	500 Ω
Suppressor Grid	0
Screen to B+	20,000 Ω
Plate to B+	85 Ω
Control Grid	100,000 Ω

6Q7—2nd Det. 1st Aud. Amp.

Heater	0
Shell	0
Heater	∞
Cathode	5,000 Ω
Diode Plate	155,000 Ω
Diode Plate	155,000 Ω
Plate to B+	200,000 Ω
Control Grid—V. C. On	1,000,000 Ω
V. C. Off	200,000 Ω

6F6—Power Output

Heater	0
Shell	0
Heater	∞
Cathode	500 Ω
Screen to B+	0
Plate to B+	625 Ω
Control Grid	500,000 Ω

6X5—Rectifier

Heater	0
Shell	0
Heater	∞
Plate	175 Ω
Plate	150 Ω
Plate to Plate	325 Ω
Cathode to B+	166 Ω

COIL AND TRANSFORMER RESISTANCES

Antenna Primary	.72
Antenna Secondary	2.8
R. F. Primary	113
R. F. Secondary	4.0
Oscillator Primary	1.6
Oscillator Secondary	2.6
First I. F. Primary	115
First I. F. Secondary	115
Second I. F. Primary	85
Second I. F. Secondary	85
Output Transformer Primary	625
Output Transformer Secondary	.4
Power Transformer Primary	.07
Power Transformer Secondary 175-150—325	
Audio Input Choke	2700-2700—5000
"B" Filter Choke	166
Antenna Coupler Primary	6.2
Antenna Coupler Secondary	.5

©John F. Rider, Publisher

MODEL 33
Socket, Trimmers
Chassis

NOBLITT SPARKS INDUSTRIES

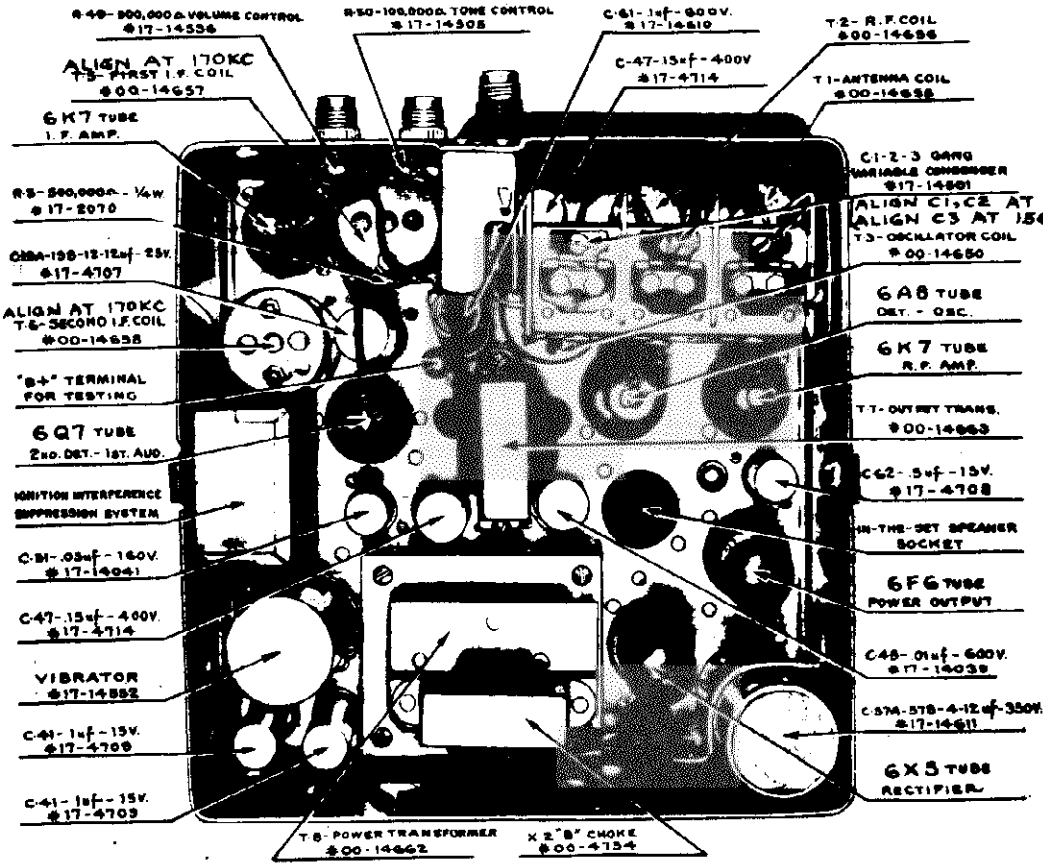

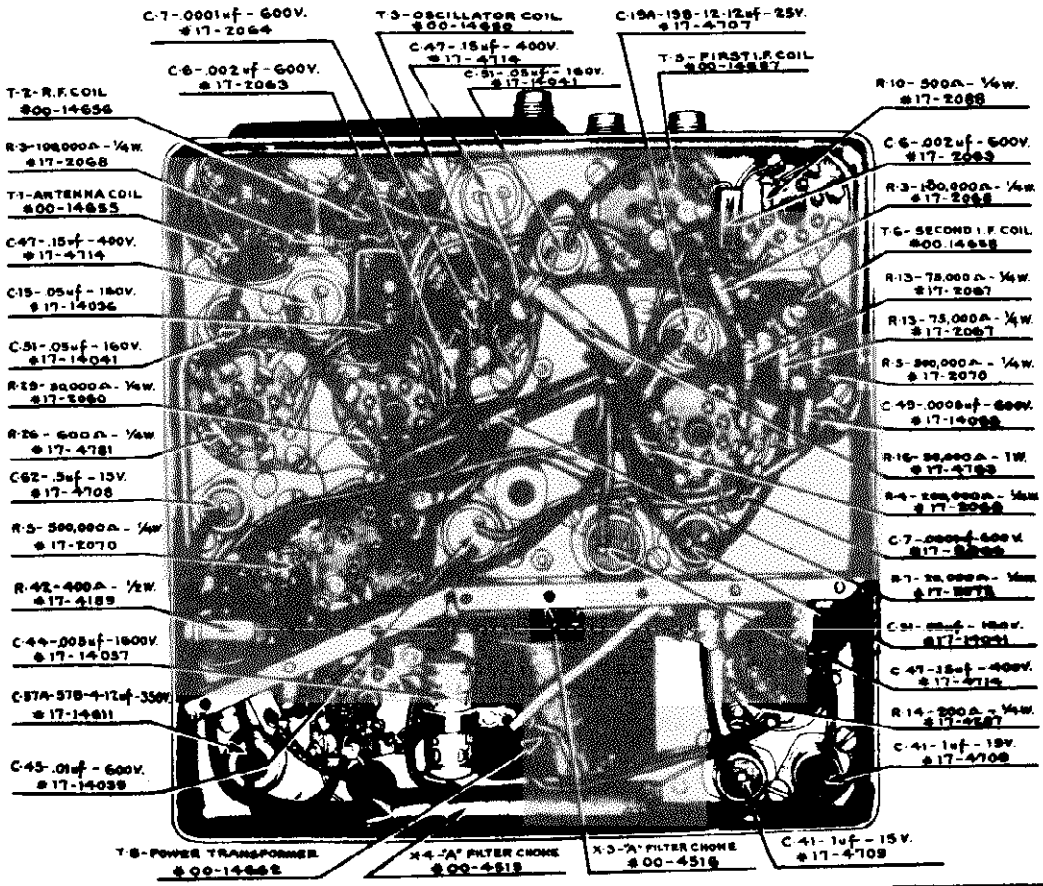

©John F. Rider, Publisher

Socket, Trimmers Alignment, Coil, Resistance

NOBLITT SPARKS INDUSTRIES

MODEL 41
MODEL 51
Voltage

MODEL 41 SOCKET VOLTAGES

(INPUT VOLTAGE 115 RMS)

Tube	Heater	Plate	Screen	Cathode	Triode Plate	Anode Grid	Oscillator Grid 1500 KC
6A7	6.3 AC	265	90	3.0*	----	155	3-5
6F7	6.3 AC	265	90	4.0*	40	----	----
41	6.3 AC	250	265	17.0	----	----	----
80	5.0 AC	330 AC	----	----	----	----	----

*Volume control full on

POINT TO POINT RESISTANCES

Tubes removed and speaker connected.

All readings taken to ground unless otherwise specified.

6A7

Heater	.1
Heater	.1
Anode Grid to B+	20,000
Plate to B+	17.0
Screen to B+	50,000
Cathode	200*
Control Grid	2.6
Oscillator Grid	50,000

6F7

Heater	.1
Heater	.1
Plate to B+	17.0
Screen to B+	20,000
Cathode	200*
Control Grid	1,500,000
Triode Grid	1,000,000
Triode Plate to B+	500,000

*Volume control in full on position

80

Filament to B+	1750
Filament to B+	1750
Plate	168
Plate	182
Plate to Plate	275
Filament to Filament	.1
Heater	.1
Heater	.1
Plate to B+	350
Screen to B+	0
Cathode	500
Control Grid	1,000,000

COIL, TRANSFORMER AND SPEAKER RESISTANCES

Speaker Field (Hot)	1750	T6 2nd IF Primary	17.0
Speaker Voice Coil	3.0	T6 2nd IF Secondary	17.0
T1 Ant. Primary	14.5	T7 Output Primary	390.0
T1 Ant. Secondary	2.6	T7 Output Secondary	.4
T3 Osc. Primary	2.6	T8 Power Primary	5.9
T3 Osc. Secondary	1.4	T8 Power Secondary (Hi Volt)	275.0
T5 1st IF Primary	17.0	T8 Power Secondary 6V	.3
T5 1st IF Secondary	17.0	T8 Power Secondary 5V	.1

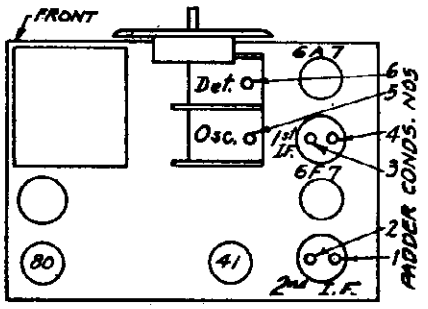

Location of trimmers on Arvin Model 41

Alignment:

Adjust padders 1, 2, 3 and 4 with the test oscillator connected to the grid cap of the 6A7. Frequency of test oscillator is 456 kc

Adjust No. 5 with the oscillator connected to the antenna wire (red) and the ground side to the set's ground wire. Set the oscillator and the dial to 1500 kc.

Adjust No. 6 with the oscillator connected as above with the same settings to 1500 kc.

Trimmer	Test Osc. Frequency	Set Radio Dial to	Set Wave Switch to
5	1,500 kc.	150	Broadcast .55—1.75
	"	"	"
7	600 kc.	0.60	"
8*	15 mc.	15.0	Short Wave 18—5.5 mc.
9	"		"
10**	456 kc.	.0	Broadcast

* To adjust oscillator padder on 6-18 mc. band, unscrew padder wide open, then tighten until first signal is reached and tuned to resonance.

** Balance for minimum signal. Wave trap to eliminate 456-kc. code signal.

For the remainder of the adjustments the test oscillator is connected to the antenna and ground wires of the receiver

Alignment:

Set test oscillator to 456 kc. Connect to 6A7 grid cap. Adjust trimmers 1, 2, 3, and 4 in the order named.

MODEL 51 SOCKET VOLTAGES

Tube	Heaters	Plate	Screen	Cathode	Oscillator Grid 1500 KC	Anode Grid
6A7	6.3	265	100	3.0	3-5	150
6D6	6.3	265	100	3.0	----	----
75	6.3	135	----	1.7	----	----
41	6.3	251	265	17.0	----	----
80	5.0	330 AC	----	----	----	----

POINT TO POINT RESISTANCES

All readings taken to ground unless otherwise stated.

Tubes removed and speaker connected. Volume control in full on position.

6A7

Heater	.1
Heater	.1
Cathode	400
Oscillator Grid	50,000
Anode Grid to B+	20,000
Screen Grid to B+	15,000
Plate to B+	17.0
Control Grid	1,305,000

6D6

Heater	.1
Heater	.1
Cathode	400
Suppressor Grid	400
Screen Grid to B+	15,400
Plate to B+	17.0
Control Grid	1,305,000

80

Filament to B+	1750
Plate	143
Plate	132
Plate to Plate	275

75

Heater	.1
Heater	.1
Cathode	5,000
Diodes	265,000
Plate to B+	200,000
Control Grid	1,000,000

41

Heater	.1
Heater	.1
Cathode	500
Screen Grid to B+	0
Plate to B+	390
Control Grid	500,000
Screen Grid to Ground	35,000

COIL, TRANSFORMER AND SPEAKER RESISTANCES

Speaker Field (Hot)	1750	T5 1st IF Primary	17.0
Voice Coil	3	T5 1st IF Secondary	17.0
T1B Ant. Primary	14.5	T6 2nd IF Primary	17.0
T1B Ant. Secondary	2.6	T6 2nd IF Secondary	17.0
T1A	.1	T7 Output Primary	390.0
T1A	.05	T7 Output Secondary	.4
T3B Osc. Primary	2.6	T8 Power Primary	5.9
T3B Osc. Secondary	1.4	T8 Power Secondary (Hi Volt)	275.0
T3A	.1	T8 Power Secondary 6V	.3
T3A	.05	T8 Power Secondary 5V	.1

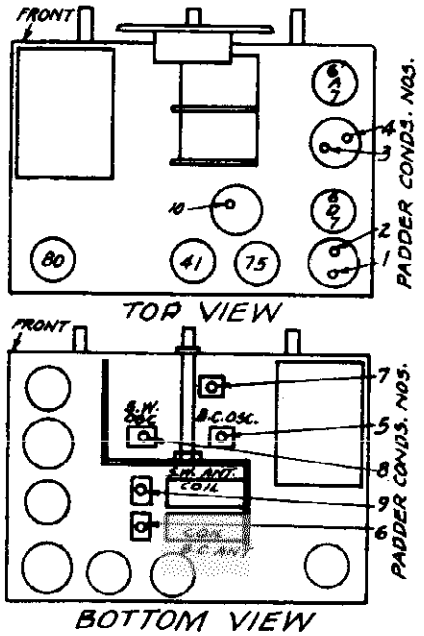

Socket layout and trimmer locations of the Arvin Model 51

©John F. Rider, Publisher

MODEL 51-B
Schematic, Socket
Trimmers, Voltage

NOBLITT SPARKS INDUSTRIES

Resistance, Coils
Alignment, Parts

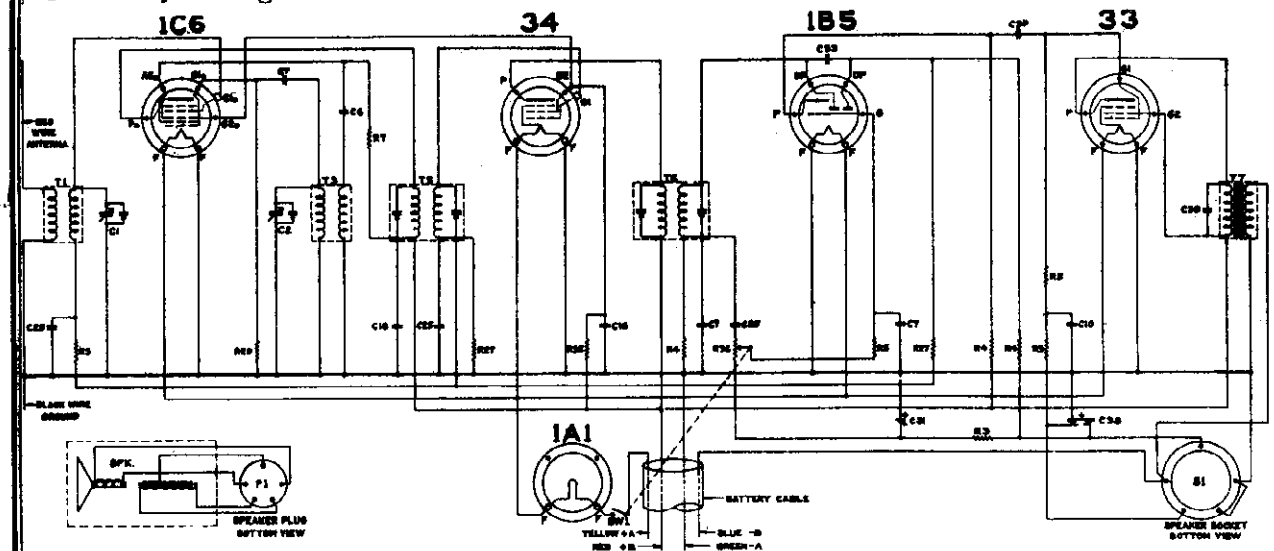

RESISTORS

R	OHMS	W	PART NO.	PRICE
1	100	1/2	17-2050	
2	2000	1/2	17-2070	
3	5000	1/2	17-2072	
4	5 MEG	1/2	17-2112	
5	500 M	1/2	17-2062	
6	1 MEG	1/2	17-2082	
7	2 MEG	1/2	17-2092	
8	250 M	1/2	17-2052	
9	250 M	1/2	17-14050	
10	250 M	1/2	17-13585	

CONDENSERS

C	CAPACITY	VOLT	PART NO.	PRICE
1	5 GANG TUNING		17-13600	
2				
3				
4	.005 MICA	600	17-2063	
5	.0001 MICA	600	17-2064	
6				
7	1 CAN	400	17-14004	
8				
9				
10	.25 CAN	400	17-14009	

C	CAPACITY	VOLT	PART NO.	PRICE
11	.05 CAN	150	17-14006	
12				
13				
14	12 ELECT.	25	17-14004	
15	.0005 MICA	600	17-14047	
16				
17				
18	W.E. ELECT. DUBBLE SEC	600 150	17-14053	
19				
X				

CHOKES & TRANSFORMERS

T	TYPE	PART NO.	PRICE
1	TRANSFORMER	20-10617	
2	ANTENNA COIL	20-10618	
3	OSCILLATOR	20-13616	
4			
5	INPUT I.F. COIL	20-13601	
6	SECOND I.F. COIL	20-13602	
7	OUTPUT TRANSF.	20-13603	

MISCELLANEOUS UNITS

SYMBOL	DESCRIPTION	PART NO.	PRICE
SPK.	DYNAMIC SPEAKER - MODEL 51B	17-13150	
S1	SPEAKER SOCKET	17-4183	
P1	SPEAKER PLUG FURNISHED WITH SPK.	- -	
SW. 1	BATT. SWITCH & VOLUME CONTROL (SEE R10)	17-13306	

Padder No. Connect Balancing Oscillator to — Balancing Osc. Freq. — Adjust Radio Dial to

1	1C6 Grid Cap	456 K. C.	
2	1C6 Grid Cap	456 K. C.	
3	1C6 Grid Cap	456 K. C.	
4	1C6 Grid Cap	456 K. C.	
5	Red Antenna Wire Black Ground Wire	1500 K. C.	1.5
6	Red Antenna Wire Black Ground Wire	1400K.C.	1.4

Adjust padders only in order shown.

POINT TO POINT RESISTANCES

All resistances taken to ground unless otherwise specified.

1C6

Filament	0
Filament	∞
Oscillator Grid	50,000 Ω
Anode Grid to B+	20,000 Ω
Screen to B+	20,000 Ω
Plate to B+	19.5
Control Grid	1,150,000

34

Filament	0
Filament	∞
Screen to B+	20,000
Plate to B+	19.5
Control Grid	1,050,000

1B5

Filament	0
Filament	∞
Control Grid:	
V. C. on	1,100,000 Ω
V. C. off	600,000 Ω
Diode Plate	190,000 Ω
Diode Plate	200,000 Ω
Plate to B+	200,000 Ω

33

Filament	0
Filament	∞
Control Grid	600,000 Ω
Screen to B+	0
Plate to B+	385

1A1

Filament to Filament	.1 Ω

BATTERY CABLE COLOR CODE

Yellow	A+
Green	A-
Blue	B-
Red	B+

COIL AND TRANSFORMER RESISTANCES

Antenna Primary	14.0
Antenna Secondary	4.4
Oscillator Primary	1.35
Oscillator Secondary	2.4
First I. F. Primary	19.5
First I. F. Secondary	19.5
Second I. F. Primary	19.5
Second I. F. Secondary	19.5
Output Transformer Primary	385
Output Transformer Secondary	24
Speaker Field—400-100	500

MODEL 51B SOCKET VOLTAGES

Tube	Filament	Screen Grid	Plate	*Control Grid	*Oscillator Grid 1500 KC	Anode Grid
1C6	2.2	70	117	1.5	4	80
34	2.2	70	117	3	.....	.....
1B5	2.2	.....	40	3	.....	.....
33	2.2	117	115	18	.....	.....
1A1	2.2	.....	.....	.....	.....	.....

*Measured with Vacuum Tube Voltmeter.

Socket Voltages to be taken with 135 Volts of B Battery and Eveready Air Cell.

Caution—Use only 135 volts of B Battery for testing. If these are not available a 5000 Ω Resistor in series with the B supply of an average A. C. Radio will supply sufficient voltage for testing

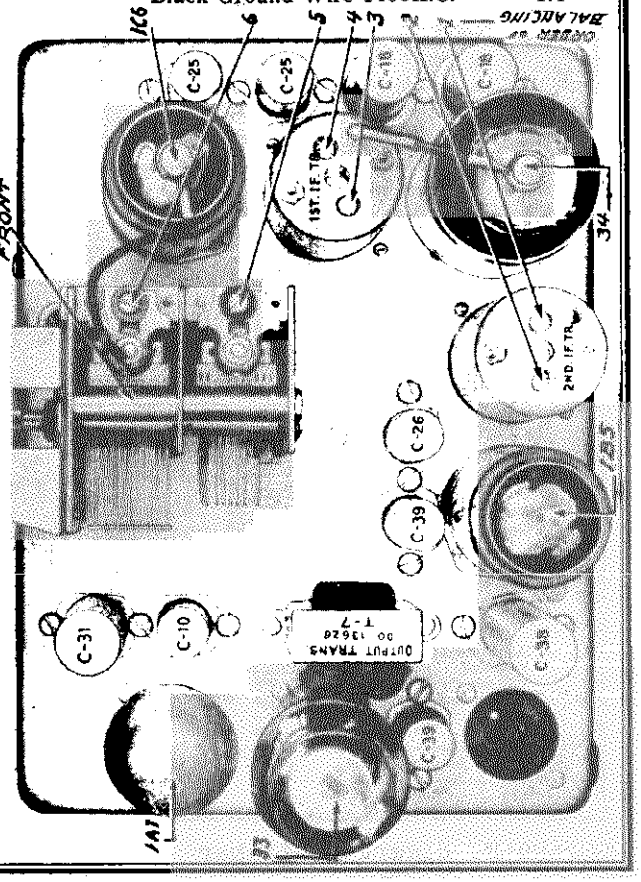

NOBLITT SPARKS INDUSTRIES

MODELS 61, 61M, 62, 62M
81, 81M
Voltage, Resistance
Alignment, Coils

Arvin 61, 61M, 62, 62M, 81, 81M

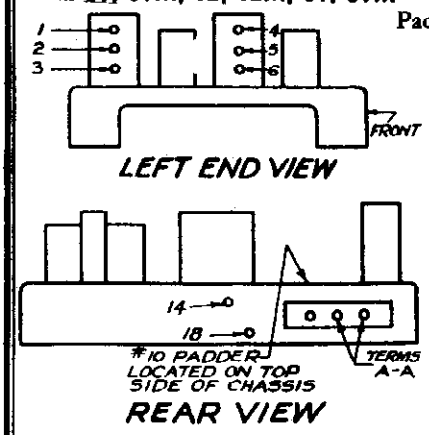

The locations of the trimmers of the Arvin 61 series are shown in the left end and rear views.

Padders numbered 7, 8, 9, 11, 12, 13, 15, 16, and 17 are accessible from the bottom of the chassis, where their locations are plainly indicated on the tuning unit cover label, through which holes must be punched in order to adjust the padders.

I-f Alignment:

I-f. peak is 456 kc. for all models. For Models 61, 62, and 81 connect the signal generator to the 6A7 tube and for Models 61M, 62M and 81M connect to the 6A8 tube. Adjust padders in their numerical order, *i.e.* 1, 2, 3, 4, 5, and 6.

R-f. Alignment:

Connect signal generator to terminals A-A on rear of chassis. Adjust padders in the following order only:

Padder Number	Signal Gen. Frequency	Adjust Radio Dial to	Set Wave Switch to Standard Broadcast
7	1500 kc.	1.5	.55—1.7
8	"	"	"
9	"	"	"
10	600 kc.	.60	"
			Aviation-Police
11	4.7 mc.	4.7	1.8—5.5
12	"	"	"
13	"	"	"
14	1.9 mc.	1.9	"
			S-W. Foreign
15	15.0 mc.	15.	6.0—18.0
16	"	"	"
17	"	"	"
18	6.0 mc.	6.0	"

Note: To adjust oscillator padder on 6-18 mc. band, unscrew wide open, then tighten until first signal is reached and tuned to resonance.

MODEL 61-62 SOCKET VOLTAGES

Tube	Heaters	Cathode	Suppressor Grid	Screen Grid	Plate	*Oscillator Grid 1500 KC	*Anode Grid	Diode Plates
78-6D6	6.3	3.0	3.0	90	250	.....	.....	.....
6A7	6.3	3.0	.....	90	250	3-10	180	.....
6D6	6.3	3.0	3.0	90	250			.....
75	6.3	1.5	.....	.....	120	DROP ACROSS SPEAKER FIELD—60 V.		†2.9
42	6.3	18.0	.....	250	240	*—Measured with Vacuum Tube Voltmeter		.....
80	5.0	3.0	.....	.....	300 A.C.	†—No Signal		.....

POINT TO POINT RESISTANCES

6D6-78

Heater	.01 ohm
Heater	.01 ohm
Cathode	300 ohms
Suppressor	300 ohms
Screen to B+	30,000 ohms
Plate to B+	.9 Ω .72 Ω .5 Ω
Control Grid	705,000
Screen to GND	100,000

6A7

Heater	.01 ohm
Heater	.01 ohm
Cathode	400 ohms
Osc. Grid	50,300 ohms
Osc. Anode to B+	20,000 ohms
Screen to B+	30,000 ohms
Plate to B+	1000 Ω
Control Grid	5.5 Ω .50 Ω .05 Ω
Screen to GND	100,000 Ω

6D6

Heater	.01 ohm
Heater	.01 ohm
Cathode	400 ohms
Suppressor	400 ohms
Screen to B+	100,000 ohms
Plate to B+	.9 Ω
Control Grid	705,000 ohms

75

Heater	.01 Ω
Heater	.01 Ω
Cathode	5000 Ω
Diode Plate	105,000 Ω
Diode Plate	305,000 Ω
Plate to B+	200,000 Ω
Control Grid:	
V. C. on 1,000,000; V. C. off 500,000	

42

Heater	.01 Ω
Heater	.01 Ω
Cathode	400 Ω
Control Grid	250,000 Ω
Screen Grid to B+	.9 Ω
Plate to B+	310 Ω

80

Filament to B+	1400 Ω
Filament to B+	1400 Ω
Plate	135 Ω
Plate	145 Ω

All resistances taken to ground unless otherwise specified. Three readings following control grid of 6A7 and plate of 6D6 signify A, B, and C wave band position resistances.

COIL AND TRANSFORMER RESISTANCES

A Band Ant. Pri.	19.0
A Band Ant. Sec.	4.7
A Band R. F. Pri.	.9
A Band R. F. Sec.	5.5
A Band Osc. Pri.	8.2
A Band Osc. Sec.	.67
B Band Ant. Pri.	.43
B Band Ant. Sec.	.55
B Band R. F. Pri.	.72
B Band R. F. Sec.	.50
B Band Osc. Pri.	.58
B Band Osc. Sec.	.47
C Band Ant. Pri.	.26
C Band Ant. Sec.	.05
C Band R. F. Pri.	.50
C Band R. F. Sec.	.05
C Band Osc. Pri.	.50
C Band Osc. Sec.	.05
1st I. F. Pri.	9.0
1st I. F. Sec.	13.5
2nd I. F. Pri.	9.0
2nd I. F. Sec.	13.5
Power Trans. Pri.	6.5
Power Trans. 5 V. Sec.	.01
Power Trans. 6 V. Sec.	.01
Power Trans. Hi. V. Sec.	135-145—280
Output Transformer Pri.	310
Output Transformer Sec.	.4
Speaker Field	1400
Speaker Voice Coil	.47
Speaker Field Used As B Filter Choke.	

MODEL 61M-62M SOCKET VOLTAGES

Tube	Heaters	Cathode	Suppressor Grid	Screen Grid	Plate	*Oscillator Grid 1500 KC	*Anode Grid	Diode Plates
6K7	6.3	3.0	3.0	90	250	.....	.....	.....
6A8	6.3	3.0	.....	90	250	3-10	180	.....
6K7	6.3	3.0	3.0	90	250			.....
6H6	6.3	.....	.....	.....	.....	DROP ACROSS SPEAKER FIELD—60 V.		†2.9
6F5	6.3	1.5	.....	.....	120	*—Measured with Vacuum Tube Voltmeter		.....
6F6	6.3	18.0	.....	250	240	†—No Signal		.....
5Z4	5.0	310	.....	.....	.....	.....	.....	.....

POINT TO POINT RESISTANCES

6K7

Heater	.01
Shell	0
Heater	.01
Cathode	400
Suppressor	400
Screen to B+	30,000
Screen to GND	100,000
Plate to B+	.9 .72 .50
Control Grid	705,000

6A8

Heater	.01
Shell	0
Heater	.01
Cathode	300
Osc. Grid	50,300
Anode to B+	20,000
Screen to B+	30,000
Screen to GND	100,000
Plate to B+	1000
Control Grid	5.5 .50 .05

6K7

Heater	.01
Shell	0
Heater	.01
Cathode	400
Suppressor	400
Screen to B+	100,000
Plate to B+	.9
Control Grid	700,000

6H6

Heater	.01
Shell	0
Heater	.01
Cathode	0
Cathode	0
Plate	100,000
Plate	300,000

6F5

Heater	.01
Shell	0
Heater	.01
Cathode	5000
Plate to B+	300,000
Control Grid:	
V. C. on 1,000,000; V. C. off 500,000	

6F6

Heater	.01
Shell	0
Heater	.01
Cathode	400
Screen to B+	0
Plate to B+	310
Control Grid	250,000

5Z4

Heater to B+	1400
Shell	0
Heater to B+	1400
Plate	115
Plate	125
Cathode to B+	1400

All resistances taken to ground unless otherwise specified. Three readings following grid of 6A8 and plate of 6K7 signify A, B, and C, wave band positions.

COIL AND TRANSFORMER RESISTANCES

A Band Ant. Pri.	19.0
A Band Ant. Sec.	4.7
A Band R. F. Pri.	.9
A Band R. F. Sec.	5.5
A Band Osc. Pri.	8.2
A Band Osc. Sec.	.67
B Band Ant. Pri.	.43
B Band Ant. Sec.	.55
B Band R. F. Pri.	.72
B Band R. F. Sec.	.50
B Band Osc. Pri.	.58
B Band Osc. Sec.	.47
C Band Ant. Pri.	.26
C Band Ant. Sec.	.05
C Band R. F. Pri.	.50
C Band R. F. Sec.	.05
C Band Osc. Pri.	.50
C Band Osc. Sec.	.05
1st I. F. Pri.	9.0
1st I. F. Sec.	13.5
2nd I. F. Pri.	9.0
2nd I. F. Sec.	13.5
Power Trans. Pri.	6.5
Power Trans. 5 V. Sec.	.01
Power Trans. 6 V. Sec.	.01
Power Trans. Hi. V. Sec.	125-135—280
Output Transformer Pri.	310
Output Transformer Sec.	.4
Speaker Field	1400
Speaker Voice Coil	.47
Speaker Field Used As B Filter Choke.	

©John F. Rider, Publisher

MODELS 61,62
Socket,Trimmers
Chassis

NOBLITT SPARKS INDUSTRIES

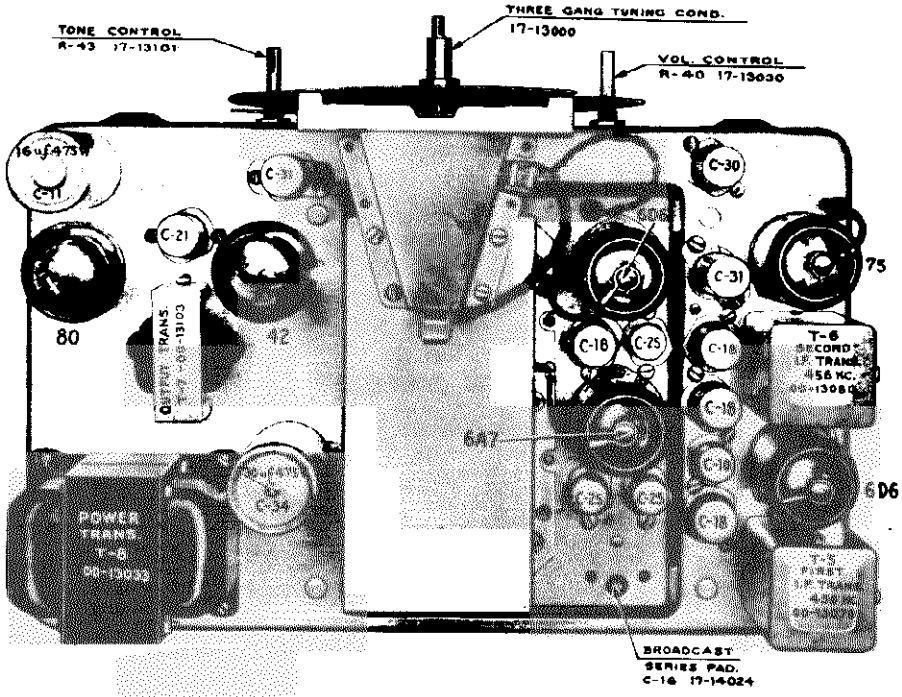

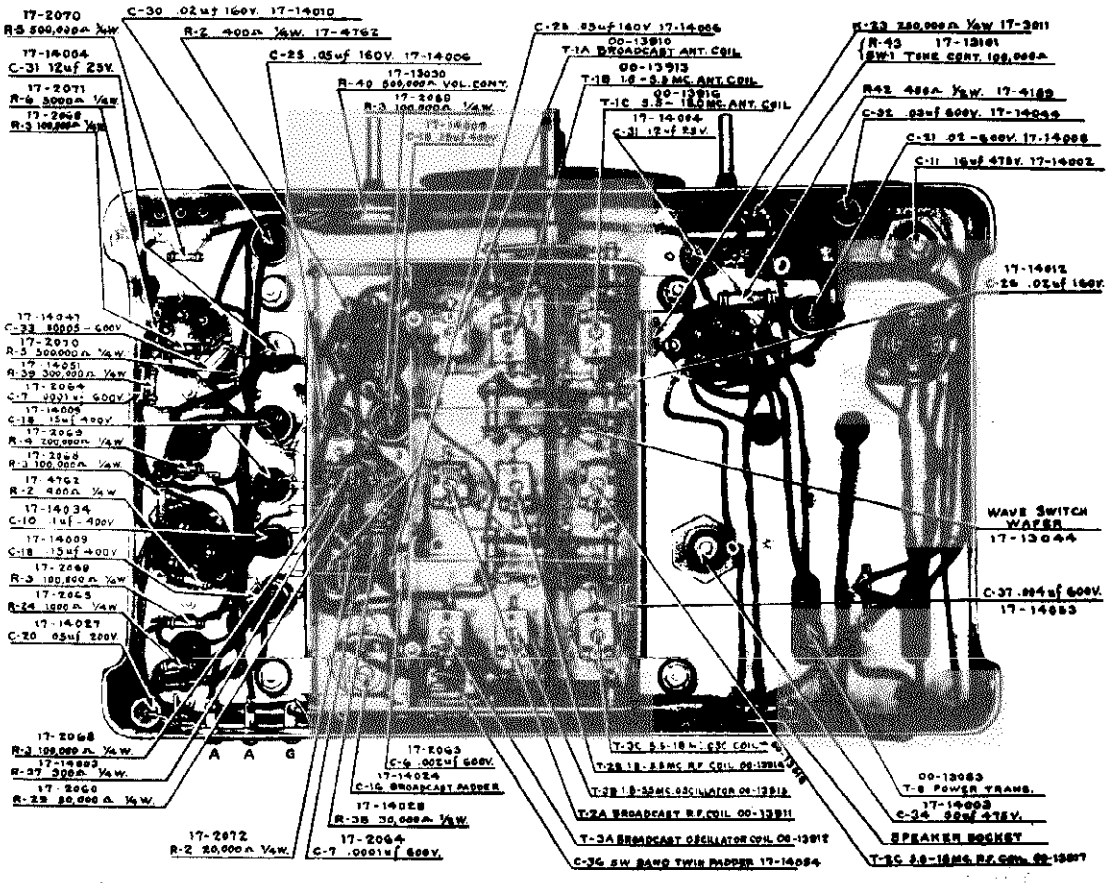

©John F. Rider Publisher

NOBLITT SPARKS INDUSTRIES

MODELS 61-B, 62-B
Schematic, Voltage
Alignment, Resistance
Coils, Parts

SCHEMATIC CIRCUIT DIAGRAM
ARVIN HOME RADIO ~ MODEL 61B & 62B

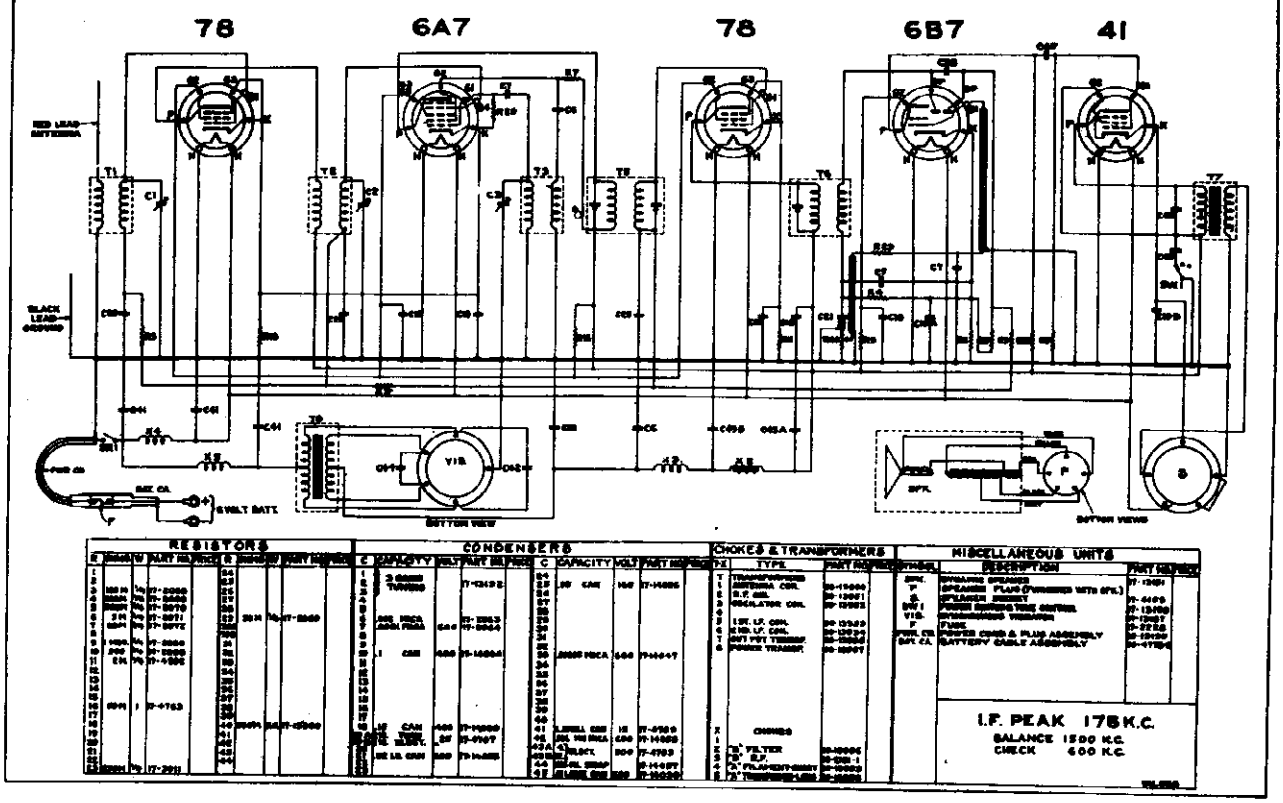

VOLTAGES

MODELS 61B AND 62B

Tube	Heater	Plate	Screen Grid	Cathode	Anode Grid	Oscillator Grid	Suppressor Grid
78	6.3	225	85	3.0	----	----	3.0
6A7	6.3	225	85	3.0	140	*2-8	----
78	6.3	225	85	3.6	----	----	3.6
6B7	6.3	35	20	2.1	----	----	----
41	6.3	222	225	15.0	----	----	----

BALANCING

Adjust Radio Dial to	Connect Balancing Oscillator to	Balancing Oscillator Frequency	Padder No.
	6A7 Grid Cap	175 K. C.	1
	6A7 Grid Cap	175 K. C.	2
	6A7 Grid Cap	175 K. C.	3
	6A7 Grid Cap	175 K. C.	4
1.5	Terminals A-A	1500 K. C.	5
1.4	Terminals A-A	1400 K. C.	6
1.4	Terminals A-A	1400 K. C.	7

Make all adjustments with output meter

POINT TO POINT RESISTANCES

78

Heater	0
Heater	∞
Cathode	500 Ω
Suppressor Grid	500 Ω
Screen to B+	50,000 Ω
Plate to B+	1.3 Ω
Control Grid	1,700,000 Ω

6A7

Heater	0
Heater	∞
Cathode	500 Ω
Osc. Grid	50,500 Ω
Anode Grid to B+	20,000 Ω
Screen Grid to B+	50,000 Ω
Plate to B+	65 Ω
Control Grid	1,600,000 Ω

78

Heater	0
Heater	∞
Cathode	2,000 Ω
Suppressor	2,000 Ω
Screen to B+	50,000 Ω
Plate to B+	100 Ω
Control Grid	1,500,000 Ω

6B7

Heater	0
Heater	∞
Cathode	5,000 Ω
Diode	205,000 Ω
Diode	500,000 Ω
Screen to B+	1,000,000 Ω
Plate to B+	250,000 Ω
Control Grid	
Vol. Control On	550,000 Ω
Vol. Control Off	50,000 Ω

41

Heater	0
Heater	∞
Cathode	540 Ω
Control Grid	500,000 Ω
Screen to B+	0
Plate to B+	560 Ω

Vibrator

Heater to B+	160 Ω
Heater to B+	175 Ω
Cathode to "A" Lead	.02 Ω
Grid	0
Plate to "A" Lead	.02 Ω

(Pin arrangement same on 37 tube)

All readings taken to ground unless otherwise specified.
Vibrator should be removed but speaker connected to socket on rear of chassis.
Heater readings are taken with all tubes and dial light bulb removed.

COIL AND TRANSFORMER RESISTANCES

Antenna Pri.	19.5 Ω
Antenna Sec.	5.0 Ω
R. F. Pri.	1.3 Ω
R. F. Sec.	5.0 Ω
Oscillator Pri.	1.7 Ω
Oscillator Sec.	8.2 Ω
1st I. F. Trans. Pri.	65.0 Ω
1st I. F. Trans. Sec.	65.0 Ω
2nd I. F. Trans. Pri.	100.0 Ω
2nd I. F. Trans. Sec.	100.0 Ω
Output Trans. Pri.	490.0 Ω
Output Trans. Sec.	1.25 Ω
Power Trans. Pri.	.05 Ω
Power Trans. Sec.	160-175—335 Ω
Speaker Field	540-8—548 Ω
Speaker Voice Coil	.65 Ω
Filter Choke	145 Ω

CAUTION—This radio is polarized and will operate only when the chassis (cable shield) is connected to the negative pole and the yellow A lead wire connected to the positive pole of a six volt storage battery.

©John F. Rider, Publisher

MODELS 61-B, 62-B
Socket, Trimmers
Chassis

NOBLITT SPARKS INDUSTRIES

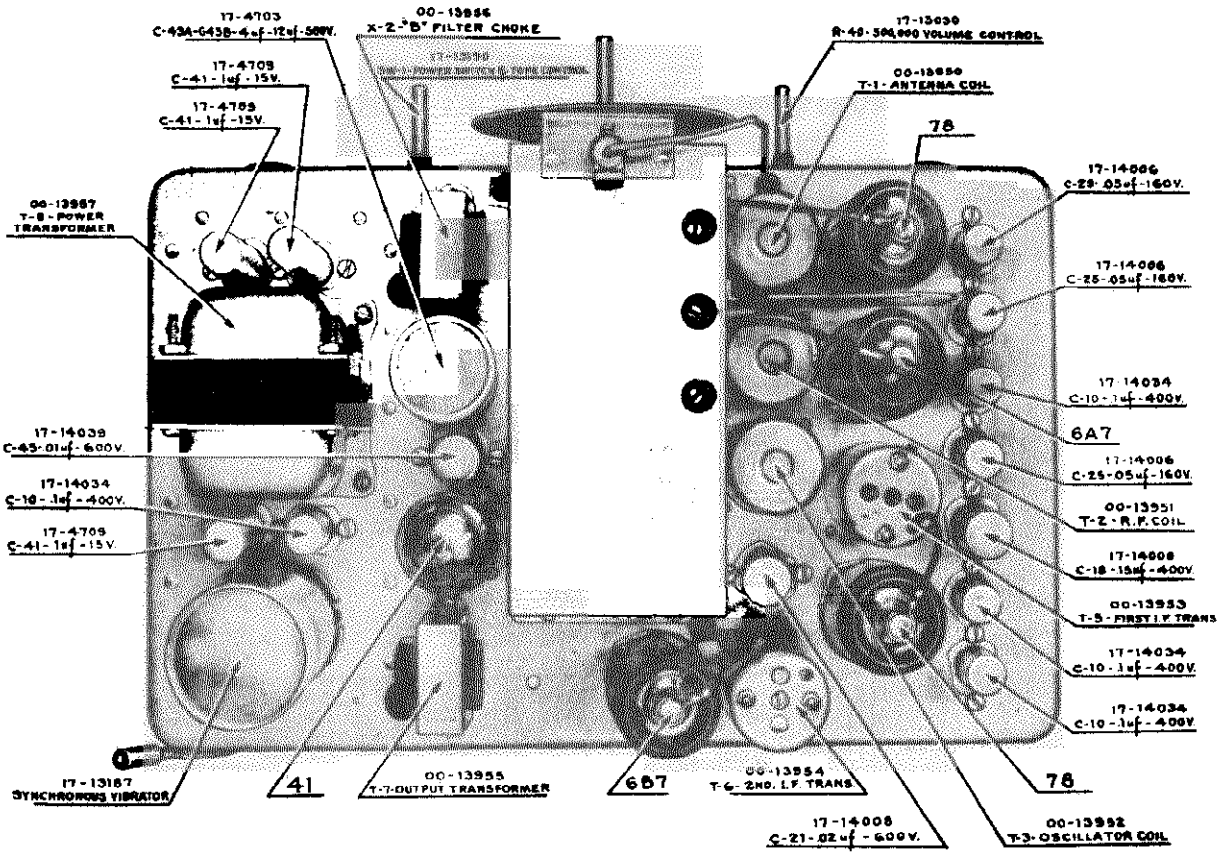

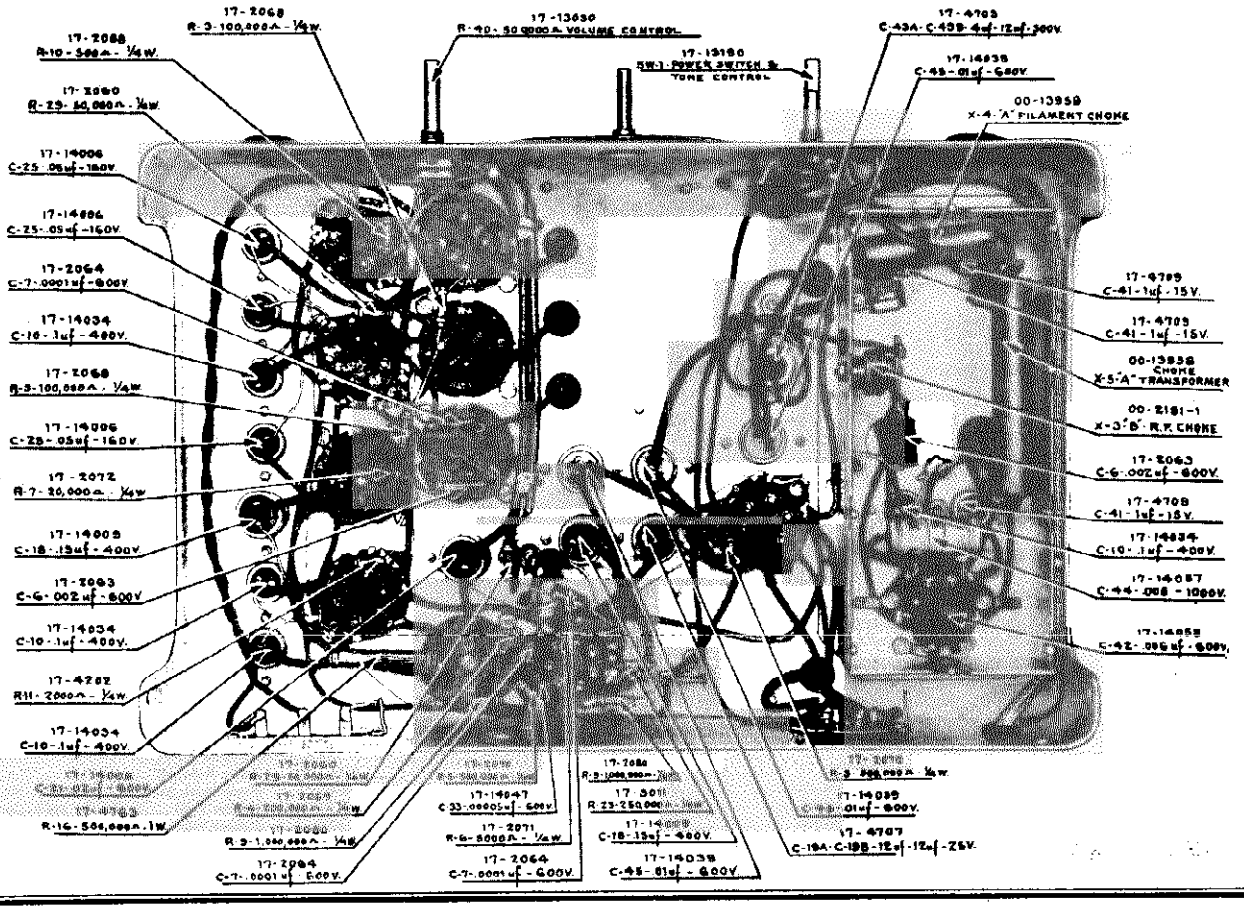

©John F. Rider. Publisher

NOBLITT SPARKS INDUSTRIES

MODEL 61-M, 62-M
Socket, Trimmers
Chassis

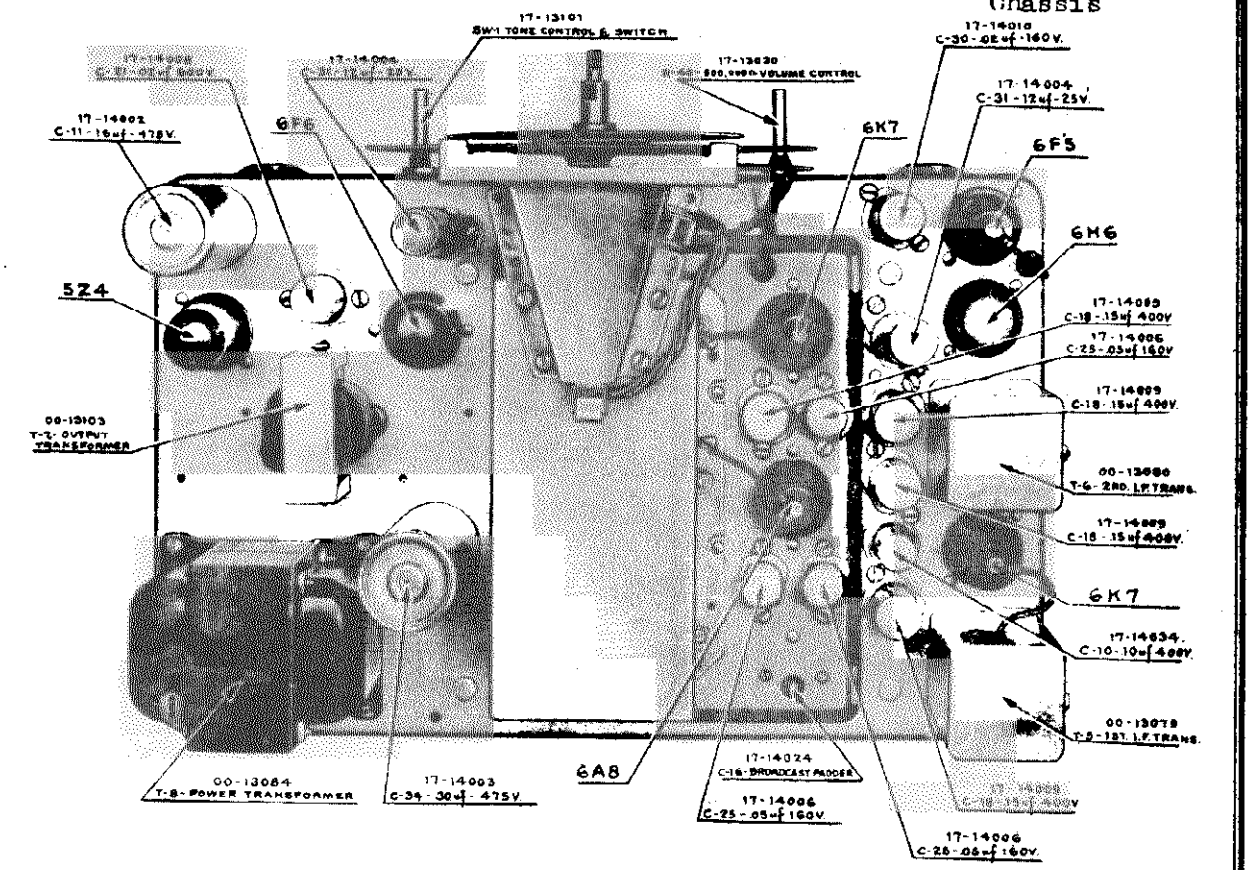

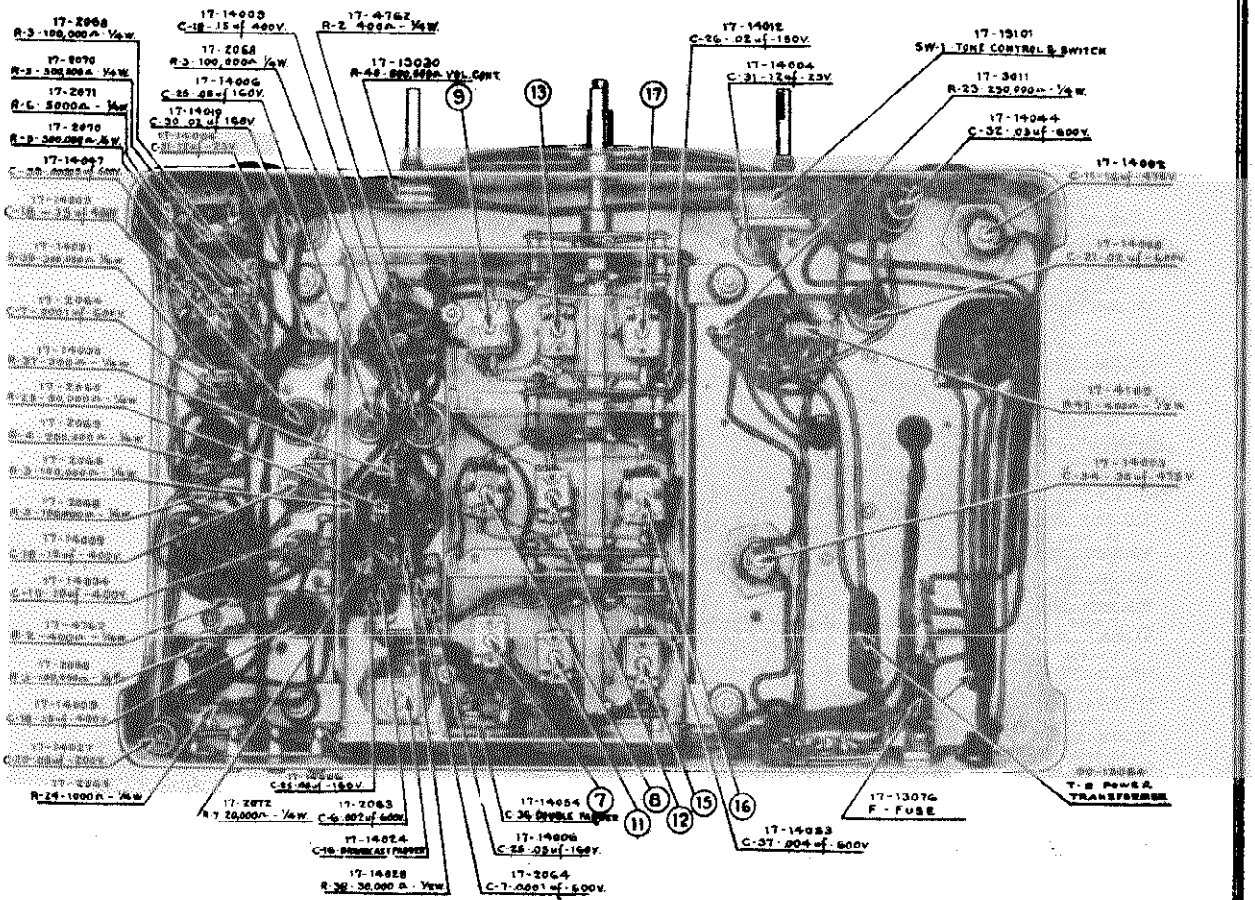

MODEL 81
Socket, Trimmers
Chassis

NOBLITT SPARKS INDUSTRIES

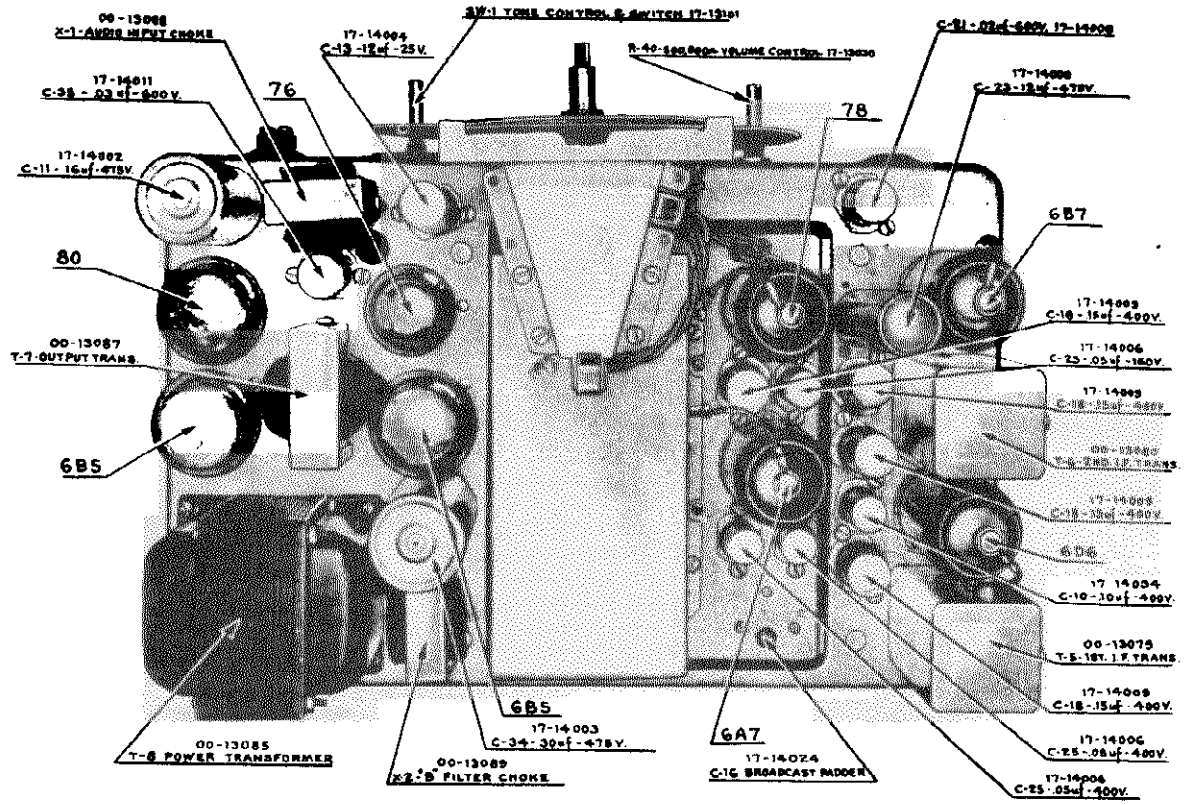

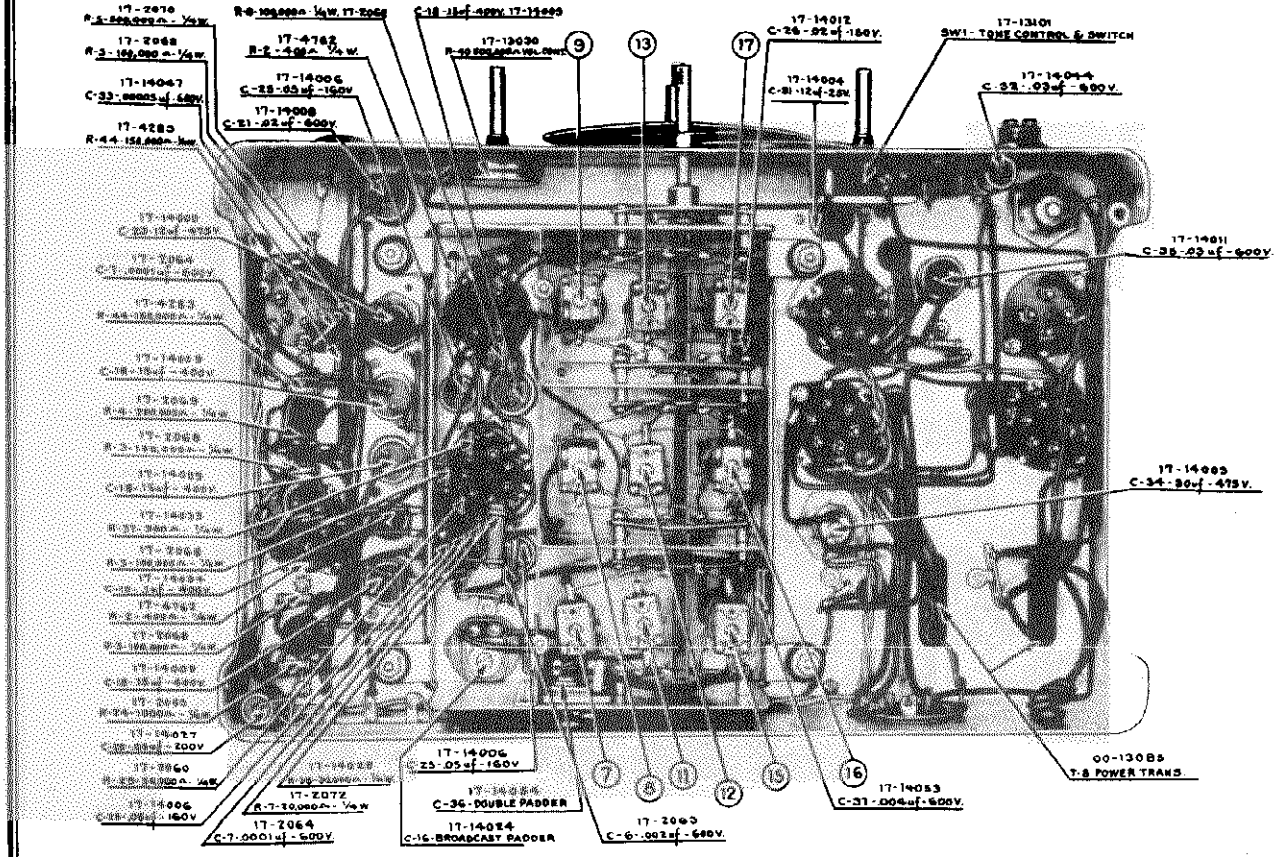

NOBLITT SPARKS INDUSTRIES

MODEL 81-M
Socket, Trimmers
Chassis

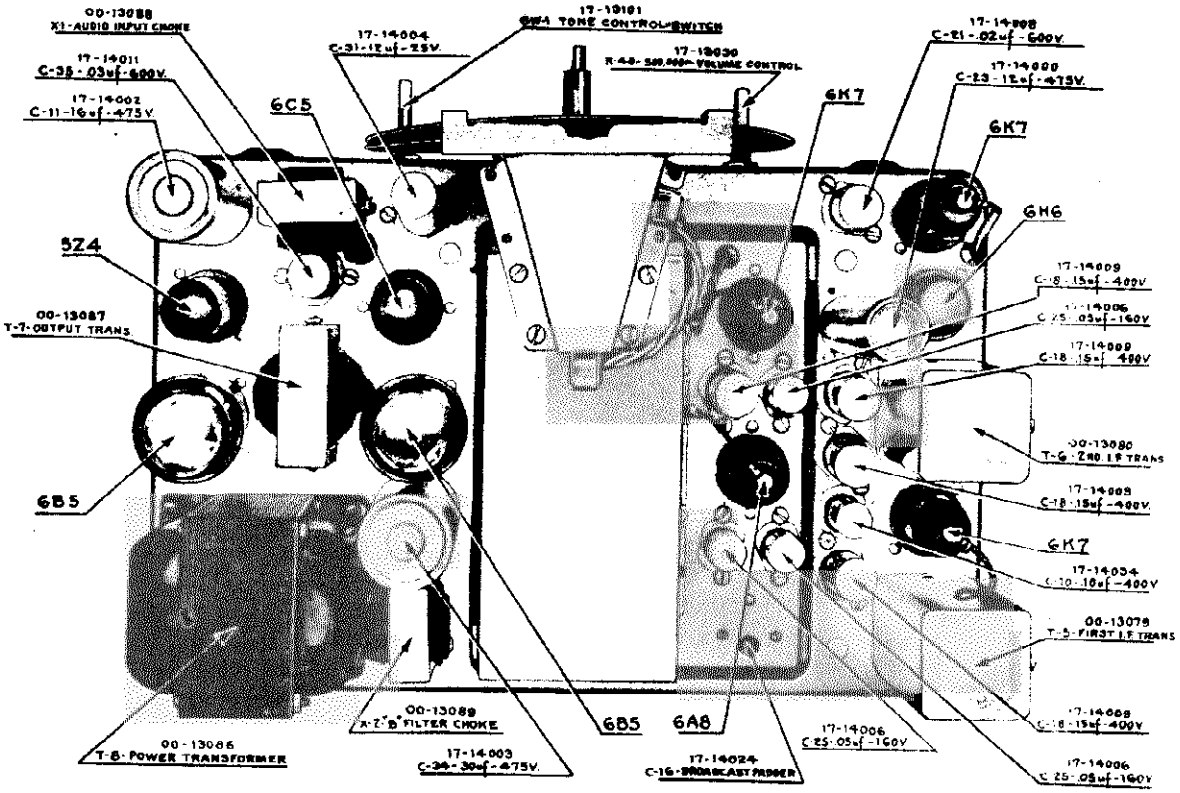

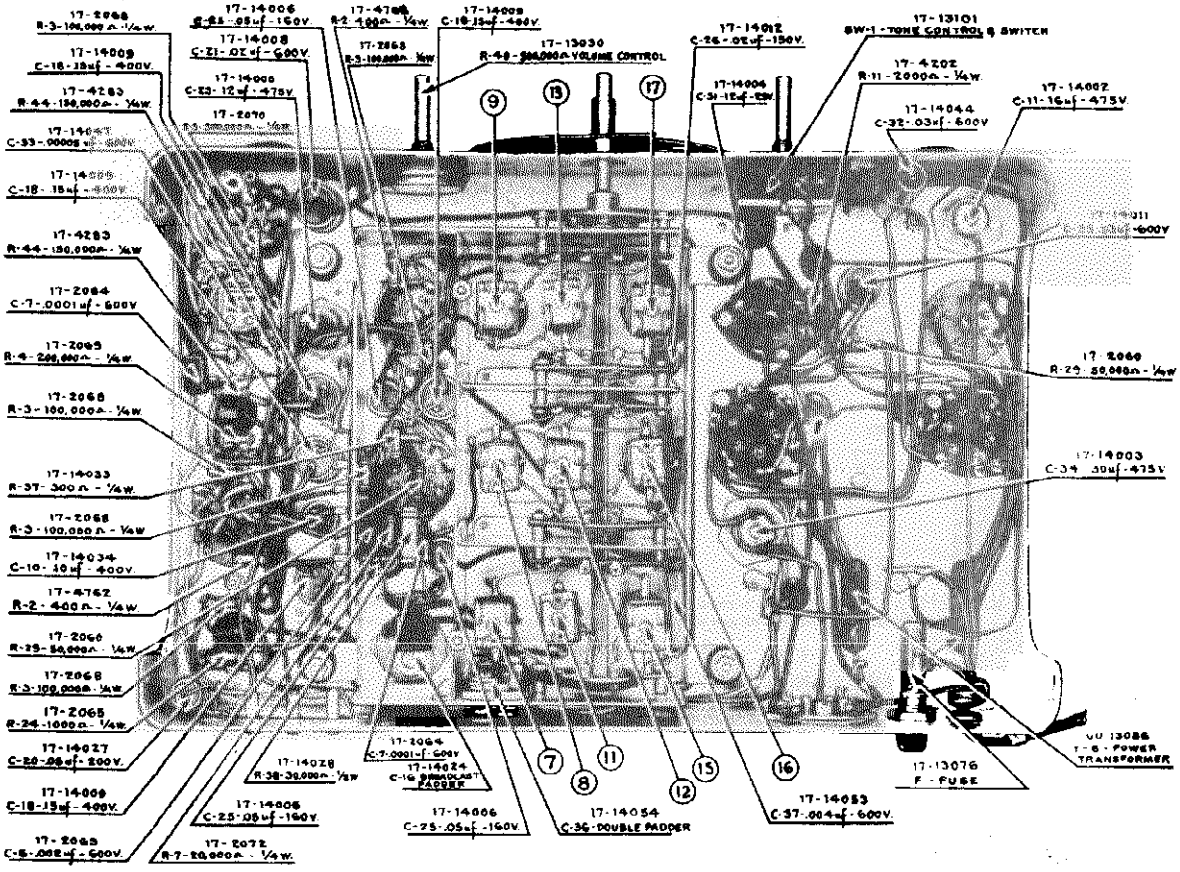

MODELS 81 & 81-M
Voltage, Resistance
Coil Data

NOBLITT SPARKS INDUSTRIES

MODEL 81 SOCKET VOLTAGES

Tube	Heaters	Cathode	Suppressor Grid	Screen Grid	Plate	*Oscillator Grid 1500 KC	*Anode Grid
6D6-78	6.3	3.0	3.0	90	250	.....	.....
6A7	6.3	3.0	.....	90	250	4-12	180
6D6	6.3	3.0	3.0	90	250	.....	.....
6B7	6.3	1.5	.....	15	15	.....	.....
76	6.3	8.0	.....	.....	195	.....	.....
6B5	6.3	0	.....	250	240	.....	.....
6B5	6.3	0	.....	250	240	.....	.....
80	5.0	310	.....	.....	300 A.C.	.....	.....

*Measured with V. T. Voltmeter Only.

POINT TO POINT RESISTANCES

6D6
Heater ..... .01 ohm
Heater ..... .01 ohm
Cathode ..... 400 ohms
Suppressor ..... 400 ohms
Screen to B+ ..... 30,000 ohms
Screen to Ground ..... 100,000 ohms
Plate to B+ ..... .9 Ω .72 Ω .5 Ω
Control Grid ..... 700,000 Ω

6A7
Heater ..... .01 Ω
Heater ..... .01 Ω
Cathode ..... 300 Ω
Osc. Grid ..... 50,300 Ω
Osc. Anode to B+ ..... 20,000 Ω
Screen to B+ ..... 30,000 Ω
Screen to GND ..... 100,000 Ω
Plate to B+ ..... 1000 Ω
Control Grid ..... 5.5 Ω .50 Ω .05 Ω

6D6
Heater ..... .01 Ω
Heater ..... .01 Ω
Cathode ..... 400 Ω
Suppressor ..... 400 Ω
Screen to B+ ..... 100,000 Ω
Plate to B+ ..... 9 Ω
Control Grid ..... 700,000 Ω

6B7
Heater ..... .01 Ω
Heater ..... .01 Ω
Cathode 0
Diode ..... 100,000 Ω
Diode ..... 300,000 Ω
Screen to B+ ..... 200,000 Ω
Plate to B+ ..... 200,000 Ω
Control Grid ..... 150,000 Ω

76
Heater ..... .01 Ω
Heater ..... .01 Ω
Cathode ..... 2000 Ω
Grid ..... V. C. on 500,000 Ω; V. C. off 0
Plate to B+ ..... 10,000 Ω

6B5
Heater ..... .01 Ω
Heater ..... .01 Ω
Cathode 0
Control Grid ..... 2700 Ω
Plate No. 1 to B+ ..... 120 Ω
Output Plate ..... 340 Ω

6B5
Heater ..... .01 Ω
Heater ..... .01 Ω
Cathode 0
Control Grid ..... 2300 Ω
Plate No. 1 ..... 120 Ω
Output Plate ..... 320 Ω

80
Filament to B+ ..... 1020 Ω
Filament to B+ ..... 1020 Ω
Plate ..... 130 Ω
Plate ..... 140 Ω

ALL READINGS TAKEN TO GROUND UNLESS OTHERWISE SPECIFIED.
SPEAKER SHOULD BE LEFT CONNECTED.

Three readings following control grid of 6A7 and plate of 6D6 signify A, B, and C, wave band position resistances.

COIL AND TRANSFORMER RESISTANCES

A Band Ant. Pri. 19.0
A Band Ant. Sec. 4.7
A Band R. F. Pri. 9
A Band R. F. Sec. 5.5
A Band Osc. Pri. 8.2
A Band Osc. Sec. ..... .67
B Band Ant. Pri. ..... .43
B Band Ant. Sec. ..... .55
B Band R. F. Pri. ..... .72
B Band R. F. Sec. ..... .50
B Band Osc. Pri. ..... .58
B Band Osc. Sec. ..... .47
C Band Ant. Pri. ..... .26
C Band Ant. Sec. ..... .05
C Band R. F. Pri. ..... .50
C Band R. F. Sec. ..... .05
C Band Osc. Pri. ..... .50
C Band Osc. Sec. ..... .05
1st I. F. Pri. 9.0
1st I. F. Sec. 13.5
2nd I. F. Pri. 9.0
2nd I. F. Sec. 13.5
Power Trans. Pri. 3.65
Power Trans. 5 V. Sec. ..... .01
Power Trans. 6 V. Sec. ..... .01
Power Trans. Hi. V. Sec. ..... 140-130—270
Output Trans. Pri. ..... 220-200—420
Output Trans. Sec. ..... .08
B Filter Choke 120
Speaker Field 900
Speaker Voice Coil 2
Audio Input Trans. ..... 2300-2700—5000

MODEL 81M SOCKET VOLTAGES

Tube	Heaters	Cathode	Suppressor Grid	Screen Grid	Plate	Oscillator Grid 1500 KC	Anode Grid	Shell
6K7	6.3	3.0	3.0	90	250	.....	.....	0
6A8	6.3	3.0	.....	90	250	4-12	150	0
6K7	6.3	3.0	3.0	90	250	.....	.....	0
6H6	6.3	0	.....	.....	.....	.....	.....	0
6K7	6.3	0	0	13	13	.....	.....	0
6C5	6.3	6.0	.....	.....	110	.....	.....	0
6B5	6.3	0	.....	250	240	.....	.....	0
6B5	6.3	0	.....	250	240	.....	.....	0
5Z4	5.0	310	.....	.....	300 A.C.	.....	.....	0

POINT TO POINT RESISTANCES

6K7
Heater ..... .01
Heater ..... .01
Shell 0
Cathode 400
Suppressor 400
Screen 100,000
Plate to B+ ..... .9 .72 .50
Control Grid 700,000
Screen to B+ 30,000

6A8
Heater ..... .01
Heater ..... .01
Shell 0
Osc. Grid 50,300
Anode Grid to B+ 20,000
Screen 100,000
Plate to B+ 1000
Control Grid ..... 5.5 .50 .05
Cathode 300
Screen to B+ 30,000

6K7
Heater ..... .01
Heater ..... .01
Shell 0
Cathode 400
Suppressor 400
Screen to B+ 100,000
Plate to B+ 9
Control Grid 700,000

6H6
Heater ..... .01
Heater ..... .01
Shell 0
Cathode 0
Cathode 0
Plate 100,000
Plate 300,000

6K7
Heater ..... .01

Heater ..... .01
Shell 0
Cathode 0
Suppressor 0
Screen to B+ 200,000
Plate 200,000
Control Grid 150,000

6C5
Heater ..... .01
Heater ..... .01
Shell 0
Cathode 2000
Control Grid:
..... V. C. on 500,000; V. C. off 0
Plate to B+ 50,000

6B5
Heater ..... .01
Heater ..... .01
Cathode 0
Plate to B+ 0
Output Plate to B+ 220
Control Grid 2300

6B5
Heater ..... .01
Heater ..... .01
Cathode 0
Plate to B+ 0
Output Plate to B+ 200
Control Grid 2700

5Z4
Heater to B+ 900
Heater to B+ 900
Shell 0
Cathode to B+ 900
Plate 110
Plate 110

All readings taken to ground unless otherwise specified. Speaker should be left connected.
Three readings following control grid of 6A8 and plate of 6K7 signify A, B, and C wave band position resistances.

COIL AND TRANSFORMER RESISTANCES

A Band Ant. Pri. 19.0
A Band Ant. Sec. 4.7
A Band R. F. Pri. 9
A Band R. F. Sec. 5.5
A Band Osc. Pri. 8.2
A Band Osc. Sec. ..... .67
B Band Ant. Pri. ..... .43
B Band Ant. Sec. ..... .55
B Band R. F. Pri. ..... .72
B Band R. F. Sec. ..... .50
B Band Osc. Pri. ..... .58
B Band Osc. Sec. ..... .47
C Band Ant. Pri. ..... .26
C Band Ant. Sec. ..... .05
C Band R. F. Pri. ..... .50
C Band R. F. Sec. ..... .05
C Band Osc. Pri. ..... .50
C Band Osc. Sec. ..... .05
1st I. F. Pri. 9.0
1st I. F. Sec. 13.5
2nd I. F. Pri. 9.0
2nd I. F. Sec. 13.5
Power Trans. Pri. 3.65
Power Trans. 5 V. Sec. ..... .01
Power Trans. 6 V. Sec. ..... .01
Power Trans. Hi. V. Sec. ..... 110-120—230
Output Trans. Pri. ..... 220-200—420
Output Trans. Sec. ..... .08
Audio Input Trans. ..... 2300-2700—5000
B Filter Choke 120
Speaker Field 900
Speaker Voice Coil 2
A Band Designates St. Bdcst. .. .55-1.8 M.C.
B Band Designates Commercial . 1.8-5.5 M.C.
C Band Designates Foreign Bcst. 5.5- 18M.C.

SEE INDEX FOR ALIGNMENT & TRIMMER LOCATIONS

©John F. Rider, Publisher

MODELS 417,467
Schematic,Voltage
Resistance,Coils
Parts List

NOBLITT SPARKS INDUSTRIES

SCHEMATIC CIRCUIT DIAGRAM
ARVIN HOME RADIO MODELS 417 & 467

1st Detector-Oscillator 6A7 — I. F. Amplifier, Detector, Bias Rectifier 6F7 — Audio Output 41

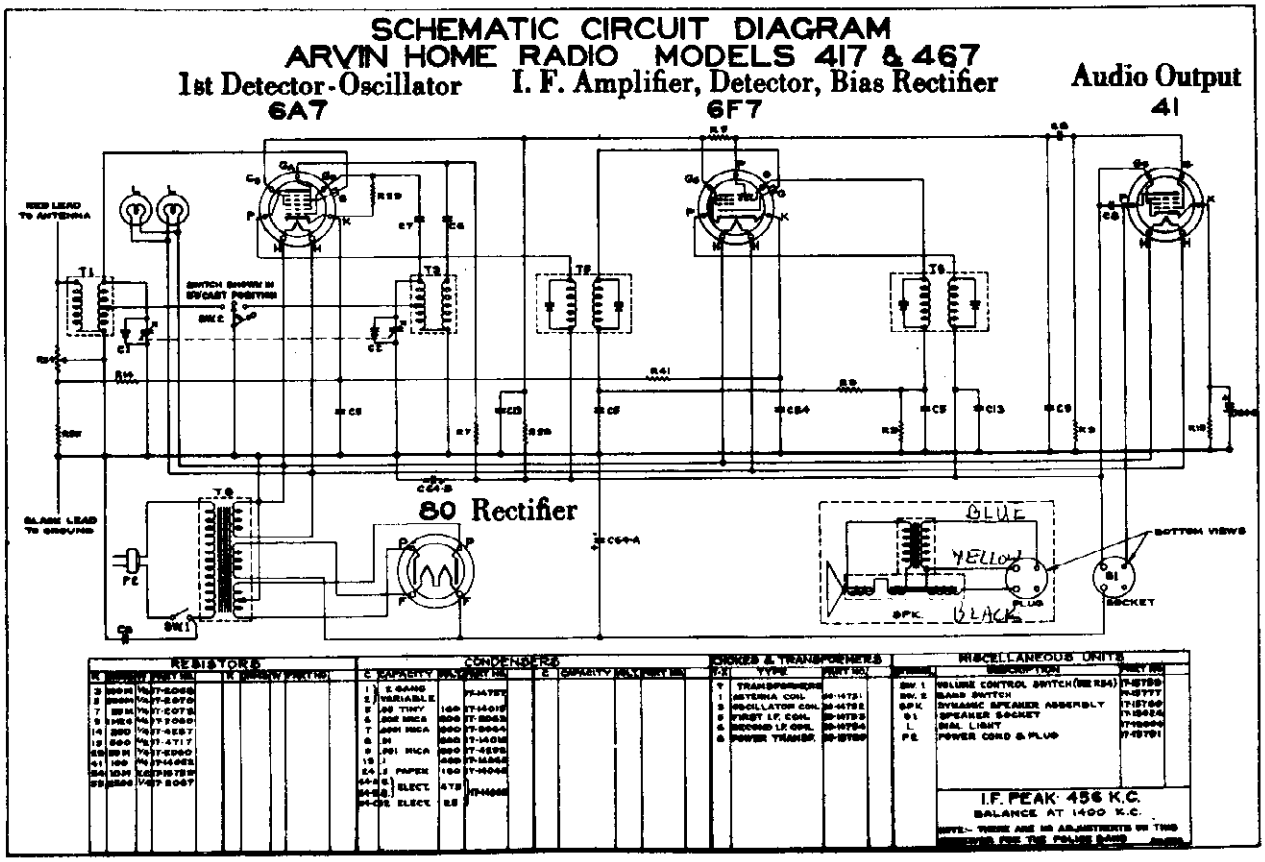

MODEL 417-467 SOCKET VOLTAGES

(INPUT VOLTAGE 115 [illegible])

Tube	Heater	Plate	Screen	Cathode	Triode Plate	Anode Grid
6A7	6.3 A. C.	275	98	3.15†	....	200
6F7	6.3 A. C.	275	98	3.75†	32	.....
41	6.3 A. C.	245	278	19.0	....	.....
80	5.0 A. C.	393 A. C.	.....	392.0	....	.....

†Volume control full on.

POINT TO POINT RESISTANCES

All readings taken to ground unless otherwise specified.

Tubes removed and speaker connected.

6A7

Heater	.1 Ω
Heater	.1 Ω
Anode Grid to B+	20,000 Ω
Plate to B+	15 Ω
Screen to B+	50,000 Ω
Cathode	200 Ω
*Control Grid	5 Ω
Oscillator Grid	50,200

*Band Switch set in

6F7

Heater	.1 Ω
Heater	.1 Ω
Plate to B+	15 Ω
Screen to B+	50,000 Ω
Cathode	900 Ω
Control Grid	1,100,000 Ω
Triode Grid	1,000,000
Triode Plate to B+	550,000

41

Heater	.1

Heater	.1
Plate to B+	700 Ω
Screen to B+	0
Cathode	500 Ω
Control Grid	1,000,000

80

Filament to B+	1,000 Ω
Plate	450 Ω
Plate	450 Ω
Plate to Plate	900 Ω
Filament to Filament	.1

COIL, TRANSFORMER AND SPEAKER RESISTANCES

Speaker Field	1,600 Ω
Speaker Voice Coil	.7 Ω
T1 Ant. Primary	12 Ω
T1 Ant. Secondary	5 Ω
T3 Osc. Primary	11.0 Ω
T3 Osc. Secondary	1.4 Ω
T5 1st I. F. Trans. Pri.	15.0 Ω
T5 1st I. F. Trans. Sec.	15.0 Ω
T6 2nd I. F. Trans. Pri.	15.0 Ω
T6 2nd I. F. Trans. Sec.	15.0 Ω
T7 Output Trans. Pri.	700 Ω
T7 Output Trans. Sec.	.7 Ω
T8 Power Trans. Pri.	19.5 Ω
T8 Power Trans. Sec. Hi-volt	200 Ω
T8 Power Trans. Sec. 6V	.5 Ω
T8 Power Trans. Sec. 5V	.1 Ω

POWER OUTPUT: 3.5 Watts

FREQUENCY RANGE: 535—1600 Kilocycles

SPEAKER: 5" Dynamic Type; 3 Ohm Voice Coil

1600—3560 Kilocycles

©John F. Rider. Publisher

MODELS 417,467
Socket,Trimmers
Chassis,Alignment

NOBLITT SPARKS INDUSTRIES

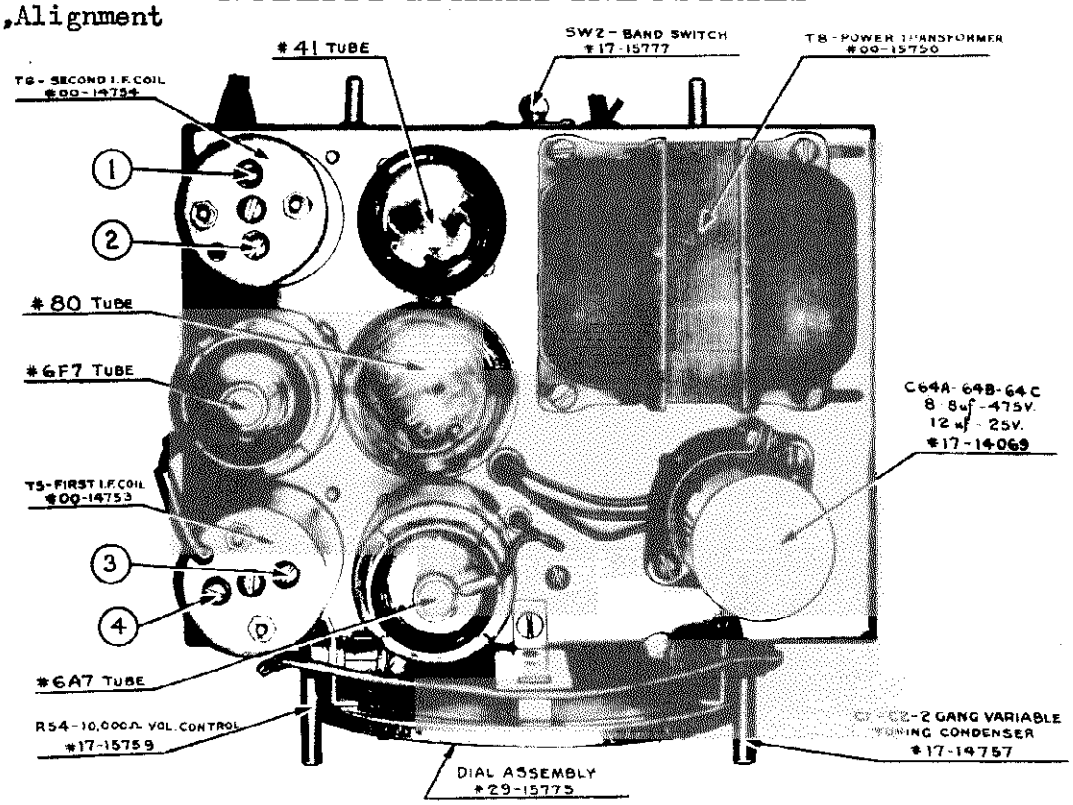

ALIGNMENT INSTRUCTIONS

Align padders #1,2,3,4 at 456 kc, #5 at 1650 kc, and #6 at 1500 kc.

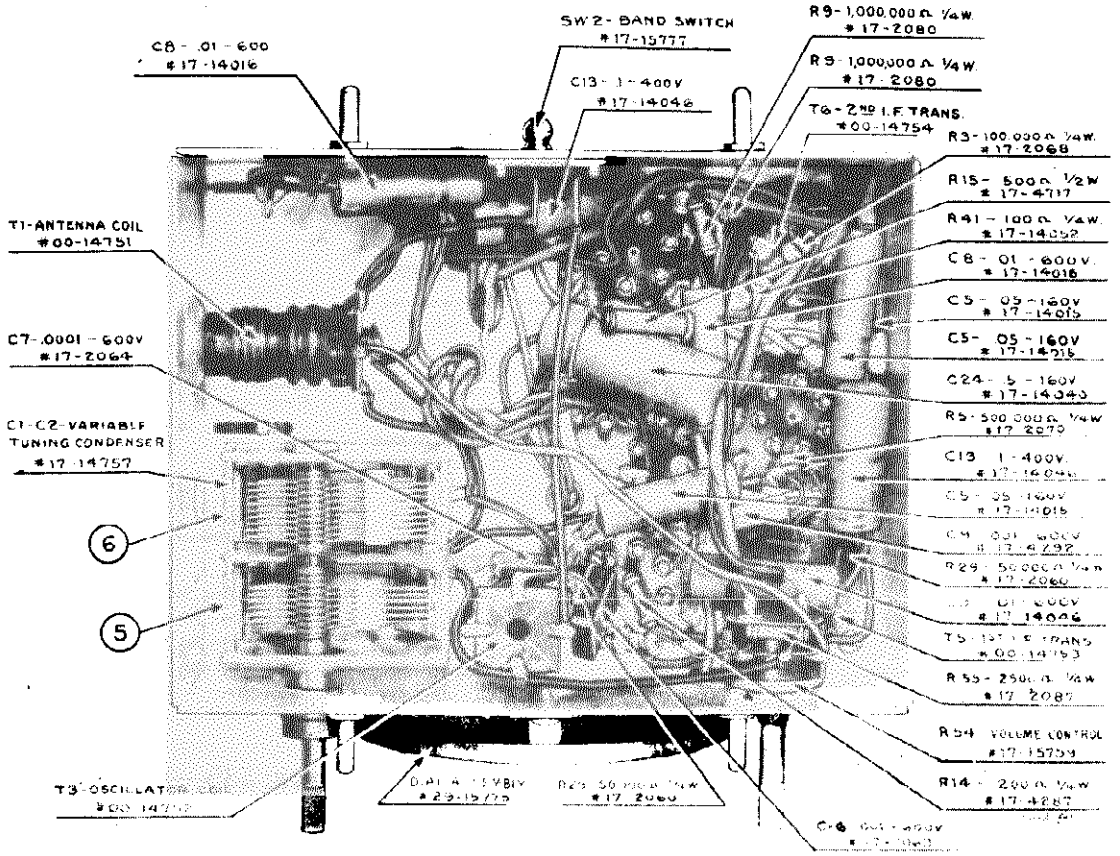

MODELS 517,527
Schematic, Voltage
Resistance, Coils
Parts

NOBLITT SPARKS INDUSTRIES

SCHEMATIC CIRCUIT DIAGRAM
ARVIN HOME RADIO MODELS 517 & 527

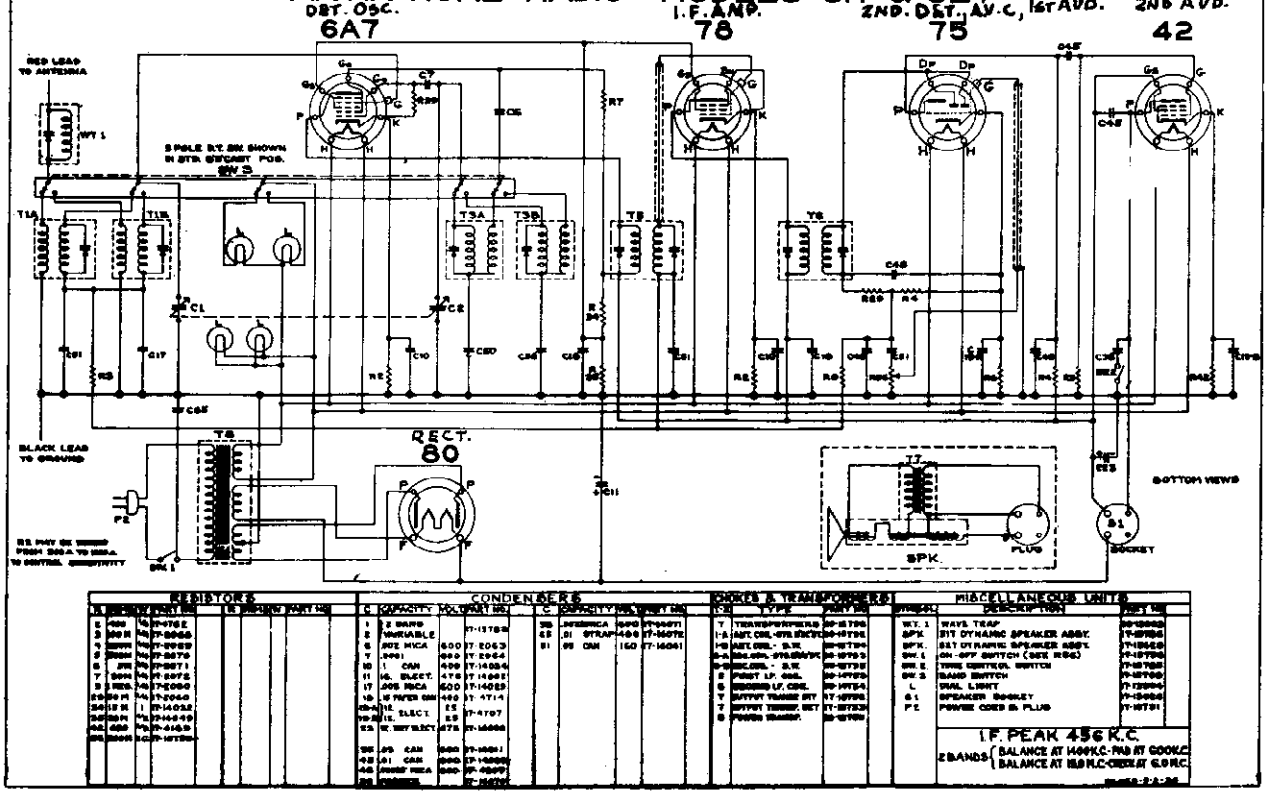

MODEL 517-527 SOCKET VOLTAGES

(INPUT VOLTAGE 115 RMS)

Tube	Heaters	Plate	Screen	Cathode	Oscillator Grid. 1500 KC.	Anode Grid.
6A7	6.3	270	100	5	10	195
78	6.3	270	100	4	....	.....
75	6.3	130	.....	1.5	....	.....
42	6.3	250	270	15	....	.....
80	5.0	340	.....	390	....	.....

POINT TO POINT RESISTANCES

All readings taken to ground unless otherwise stated. Tubes removed and speaker connected volume control in full on position

6A7

Heater	.0
Heater	.1
Cathode	400 ohms
Oscillator Grid	50,400 ohms
Anode Grid to B+	20,000 ohms
Screen Grid to B+	15,000 ohms
Plate to B+	15 ohms
Control Grid	1,305,000 ohms

42

Heater	.0
Heater	.1
Cathode	400 ohms
Screen Grid to B+	0
Plate to B+	700 ohms
Control Grid	500,000 ohms
Screen Grid to Ground	35,000 ohms

75

Heater	.0
Heater	.1
Cathode	5,000 ohms
Diodes	255,000 ohms
Plate to B+	200,000 ohms
Control Grid	500,000 ohms

80

Filament to B+	1,750 ohms
Plate	155 ohms
Plate	145 ohms
Plate to Plate	300 ohms

78

Heater	.0
Heater	.1
Cathode	400 ohms
Suppressor Grid	400 ohms
Screen to B+	15,000 ohms
Plate to B+	15 ohms
Control Grid	1,205,000 ohms

COIL, TRANSFORMER AND SPEAKER RESISTANCES

WT1 Wave Trap	3.0 ohms
T1A Broadcast Ant. Pri.	15.0 ohms
T1A Broadcast Ant. Sec.	3.5 ohms
T1B Short Wave Ant. Pri.	2.6 ohms
T1B Short Wave Ant. Sec.	1.7 ohms
T3A Broadcast Osc. Pri.	2.6 ohms
T3A Broadcast Osc. Sec.	1.7 ohms
T3B Shortwave Osc. Pri.	.3 ohms
T3B Shortwave Osc. Sec.	.7 ohms
T5 First I. F. Pri.	15.0 ohms
T5 First I. F. Sec.	15.0 ohms
T6 Second I. F. Pri.	15.0 ohms
T6 Second I. F. Sec.	15.0 ohms
T7 Speaker Trans. Pri.	570 ohms
T7 Speaker Trans. Sec.	2.6 ohms
Speaker Field	1,500 ohms
Speaker Voice Coil	2.6 ohms
T8 Power Trans. Pri.	6.5 ohms
T8 Power Trans. Sec. (5V)	.2 ohms
T8 Power Trans. Sec. (6V)	.2 ohms

POWER OUTPUT: 3.5 Watts

SPEAKER: 6" Dynamic; 3 Ohm Voice Coil

FREQUENCY RANGE: 535—1650 Kilocycles
5.5—18.5 Megacycles

©John F. Rider, Publisher

MODELS 517,527
Socket,Trimmers
Chassis,Alignment

NOBLITT SPARKS INDUSTRIES

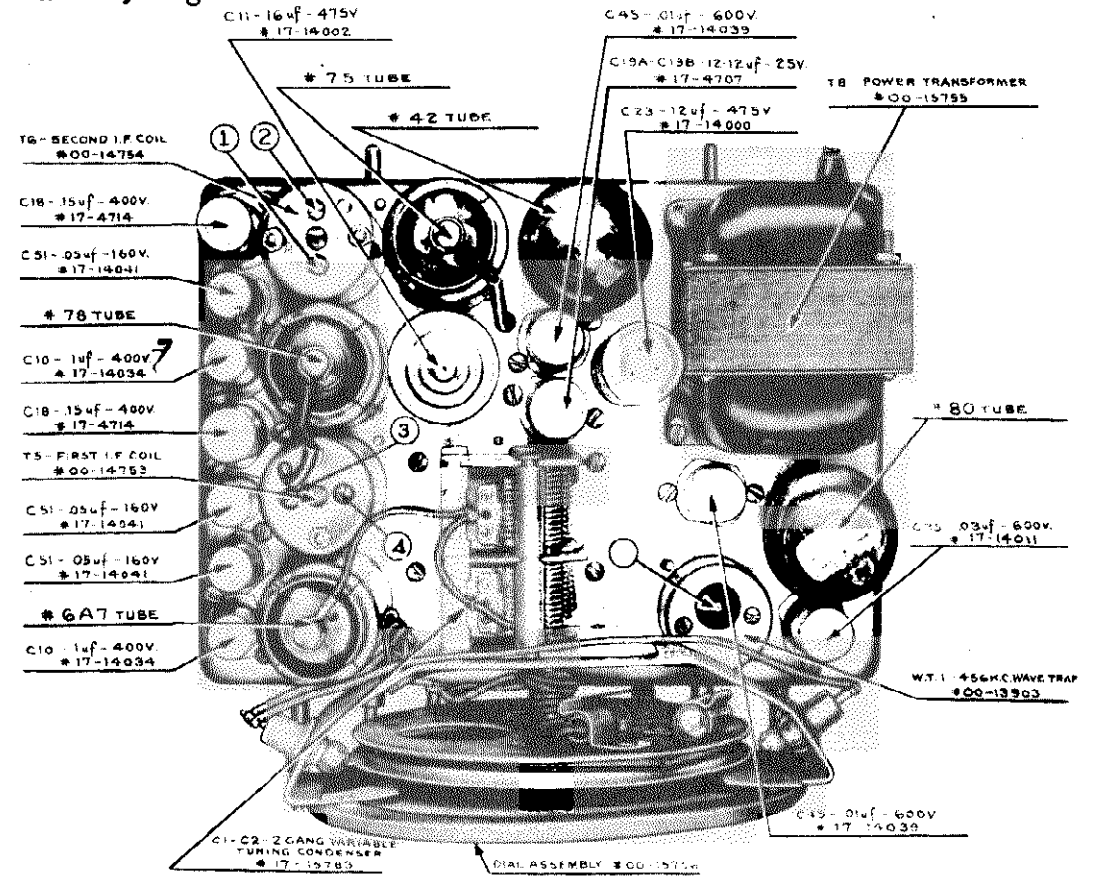

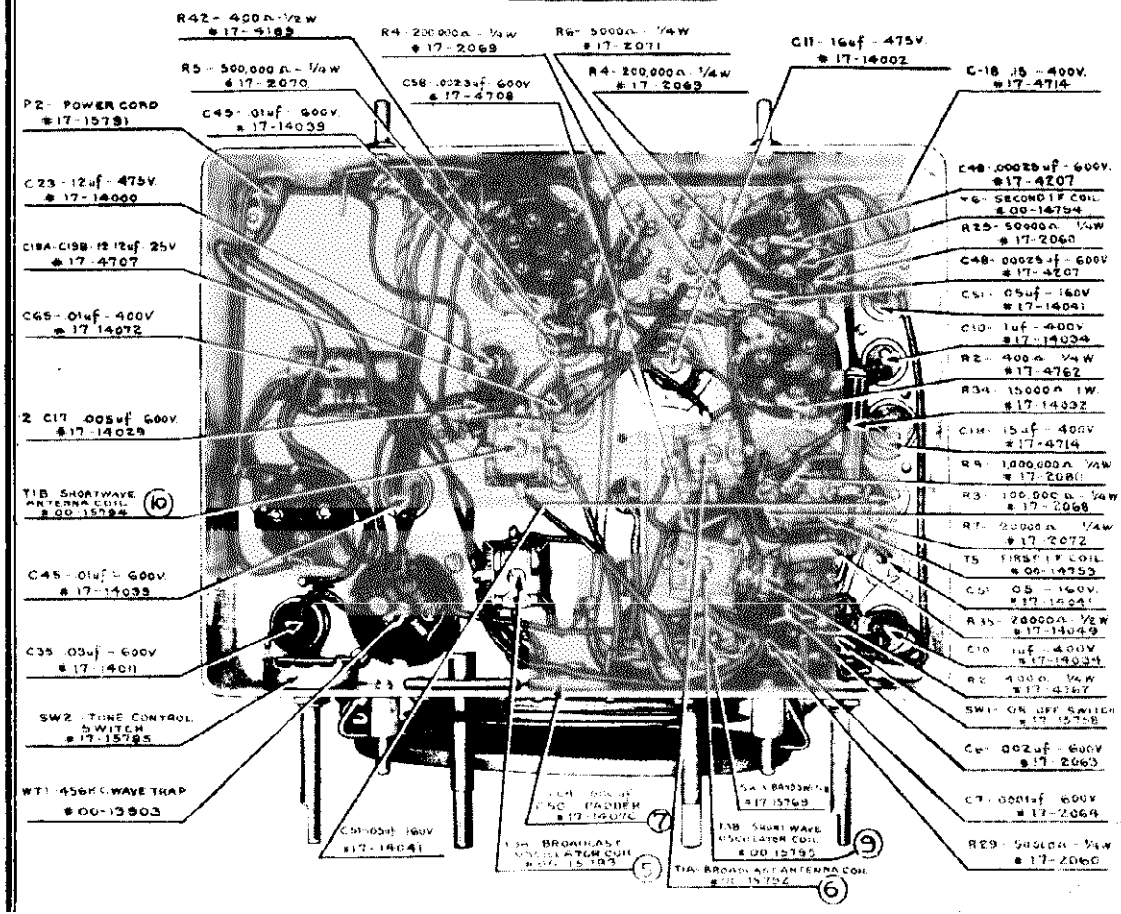

Adjust padder condensers 1,2,3 and 4 in the order designated by their numbering for maximum output. Connect oscillator to antenna lead (red wire). Rotate condenser entirely out of mesh and adjust padder number 5 for resonance at 1650 KC. Reset the balancing oscillator to 1400 KC. and rotate the tuning condenser until this signal is received. Adjust padder number 6 for maximum output. Align padder #7 at 600 KC. Align trimmer #8 at 1400 KC. Adjust trimmer #9, beginning with the trimmer set at minimum capacity and taking the first peak.

MODELS 517-B, 527-B
Schematic, Voltage
Resistance, Coils
Parts

NOBLITT SPARKS INDUSTRIES

SCHEMATIC CIRCUIT DIAGRAM
ARVIN HOME RADIO MODELS 517B & 527B

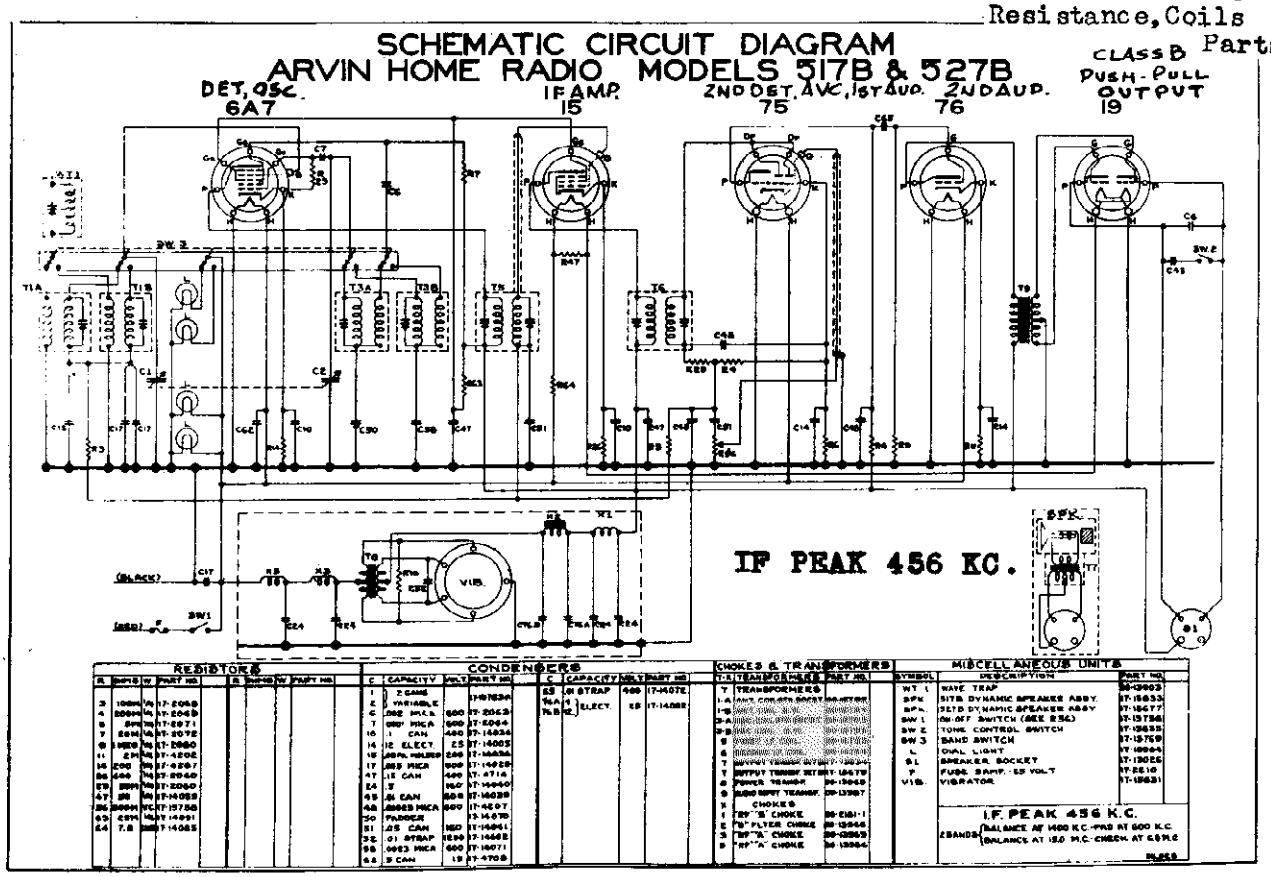

MODELS 517B-527B SOCKET VOLTAGES

Tube	Filament or Heater	Plate	Screen	Cathode	Oscillator Grid	Anode Grid
6A7	6.0	135	60	1.4	2.4	135
15	2.0	135	60	1.2	....	....
75	6.0	65	....	.8	....	....
76	6.0	140	....	5.6	....	....
19	2.0	....	....	....	....	....

POINT TO POINT RESISTANCES

All Readings Taken to Ground Unless Otherwise Specified

15

Heater	9.8 ohms
Heater	61.8 ohms
Cathode	400 ohms
Screen to B+	25,000 ohms
Plate to B+	15 ohms
Control Grid	1,305,000 ohms

75

Heater	0
Heater	2 ohms
Cathode	5,000 ohms
Diode	255,000 ohms
Diode	255,000 ohms
Plate to B+	200,000 ohms
Control Grid	500,000 ohms

76

Heater	0
Heater	2 ohms
Cathode	2,000 ohms
Control Grid	1,000,000 ohms
Plate to B+	265 ohms

19

Filament	0
Filament	60 ohms
Grid	150 ohms
Grid	150 ohms
Plate to B+	175 ohms
Plate to B+	175 ohms

6A7

Heater	0
Heater	2 ohms
Cathode	400 ohms
Oscillator Grid	50,400 ohms
Anode Grid to B+	20,000 ohms
Screen to B+	25,000 ohms
Plate to B+	15 ohms
Control Grid	1,305,000 ohms

COIL, TRANSFORMER AND SPEAKER RESISTANCES

WT1 Wave Trap	3.0 ohms
T1A Broadcast Ant. Pri.	15.0 ohms
T1A Broadcast Ant. Sec.	3.5 ohms
T1B Short Wave Ant. Pri.	2.6 ohms
T1B Short Wave Ant. Sec.	1.7 ohms
T3A Broadcast Osc. Pri.	2.6 ohms
T3A Broadcast Osc. Sec.	1.7 ohms
T3B Shortwave Osc. Pri.	.2 ohms
T3B Shortwave Osc. Sec.	.7 ohms
T5 First I. F. Pri.	15.0 ohms
T5 First I. F. Sec.	15.0 ohms
T6 Second I. F. Pri.	15.0 ohms
T6 Second I. F. Sec.	15.0 ohms
T7 Speaker Trans. Pri.	570 ohms
T7 Speaker Trans. Sec.	2.6 ohms
Speaker Voice Coil	2.6 ohms
T8 Power Trans. Pri.	1-0-1 ohms
T8 Power Trans. Sec.	170-0-170 ohms

©John F. Rider, Publisher

MODELS 517-B, 527-B
Socket, Trimmers
Chassis, Alignment

NOBLITT SPARKS INDUSTRIES

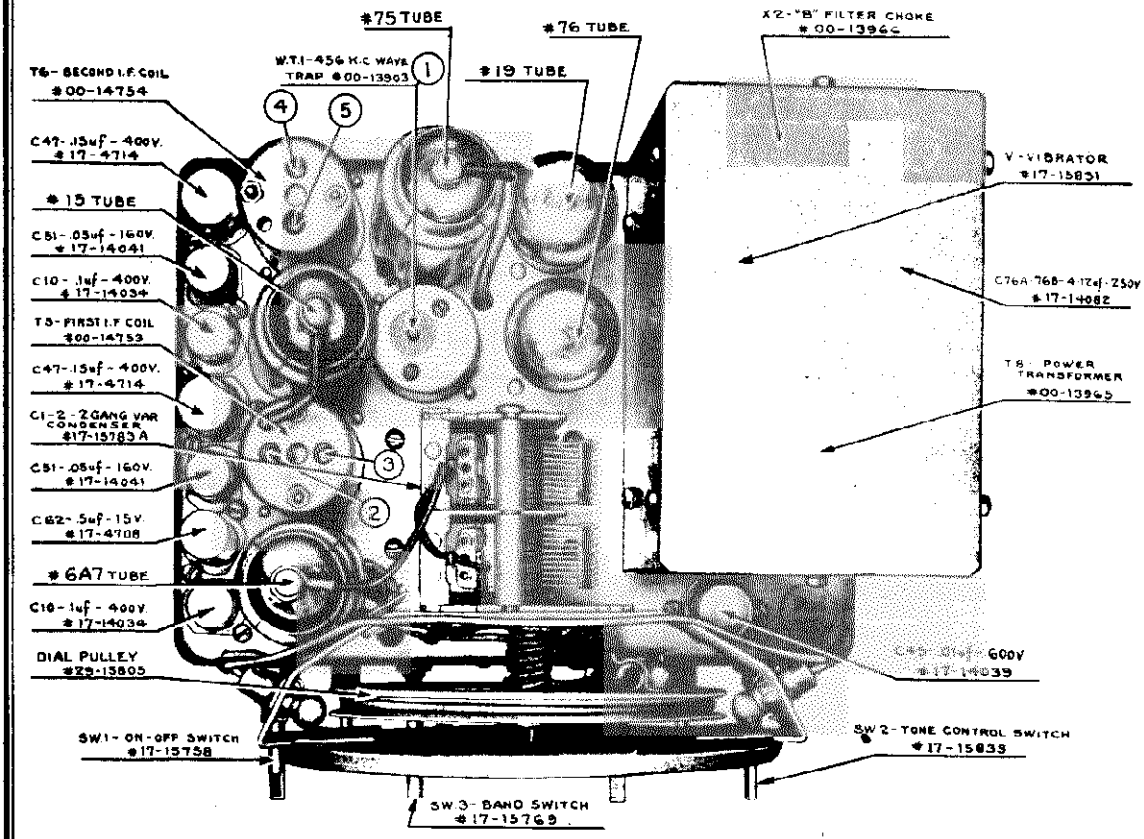

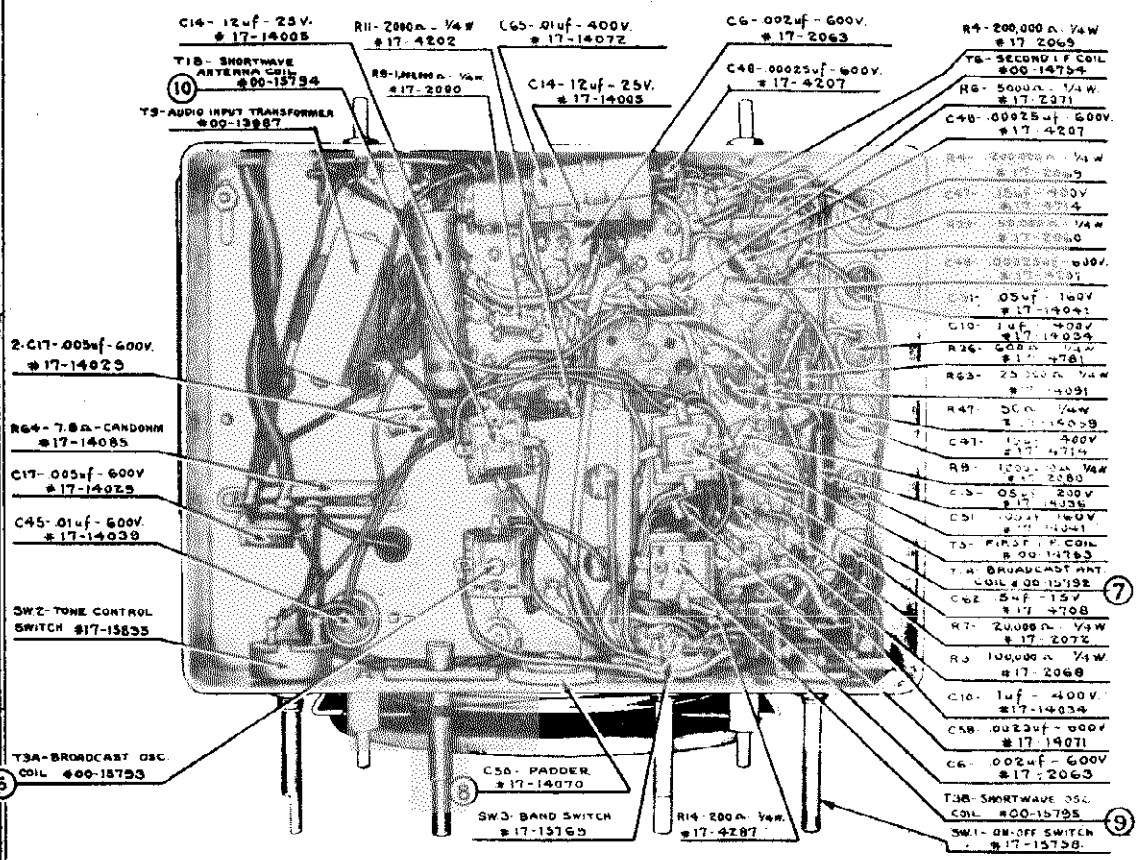

Adjust padder condensers 1,2,3 and 4 in the order designated by their numbering for maximum output. Connect oscillator to antenna lead (red wire). Rotate condenser entirely out of mesh and adjust padder number 5 for resonance at 1650 KC. Reset the balancing oscillator to 1400 KC. and rotate the tuning condenser until this signal is received. Adjust padder number 6 for maximum output. Align padder #7 at 600 KC. Align trimmer #8 at 1400 KC. Adjust trimmer #9, beginning with the trimmer set at minimum capacity and taking the first peak.

MODELS 617, 627
Schematic, Voltage
Resistance, Coils
Parts

NOBLITT SPARKS INDUSTRIES

SCHEMATIC CIRCUIT DIAGRAM
ARVIN HOME RADIO MODELS 617 & 627

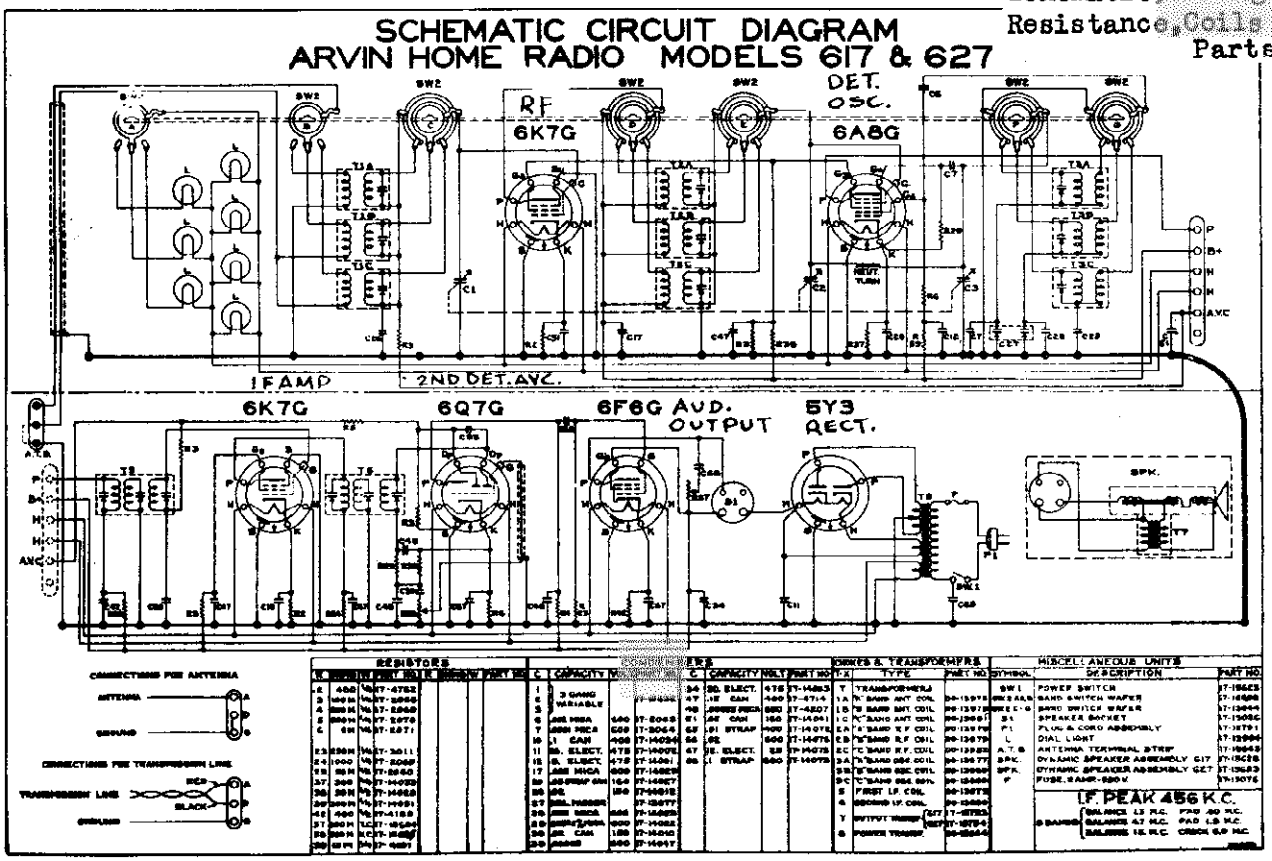

MODEL 617-627 SOCKET VOLTAGES

(INPUT VOLTAGE 115 RMS)

Tube	Heaters	Plate	Screen	Cathode	Oscillator Grid, 1500 KC.	Anode Grid.
6K7G	6.3	250	100	3.0	.....	.....
6A8G	6.3	250	100	3.0	9.0	170
6K7G	6.3	250	90	3.0	.....	.....
6Q7G	6.3	115	.....	1.3	.....	.....
6F6G	6.3	240	250	15.0	.....	.....
5Y3	5.0	330-0-330	.....	.....	.....	.....

POINT TO POINT RESISTANCES SEE INDEX FOR ALIGNMENT

All readings taken to ground unless otherwise stated. Tubes removed, speaker connected and volume control in full on position.

6K7G

Heater	0
Shell	0
Heater	.1
Cathode	400 ohms
Suppressor Grid	0
Screen to B+	90,000 ohms
Plate to B+	1.35-11-9
Screen to Gnd.	100,000 ohms
Control Grid	700,000 ohms

6A8G

Heater	0
Shell	0
Heater	.1
Cathode	300 ohms
Oscillator Grid	50,300 ohms
Anode to B+	20,000 ohms
Screen to B+	30,000 ohms
Screen to Gnd.	100,000 ohms
Plate to B+	1,000 ohms
Control Grid	5-.45-.15 ohms

6K7G

Heater	0
Shell	0
Heater	.1
Cathode	400 ohms
Suppressor Grid	0
Screen to B+	100,000 ohms
Plate to B+	1,000 ohms
Screen	230,000 ohms
Control Grid	700,000 ohms

6Q7G

Heater	0
Shell	0
Heater	.1
Cathode	5,000 ohms
Diode	355,000 ohms
Diode	100,000 ohms
Plate to B+	200,000 ohms
Control Grid	500,000 ohms

6F6G

Heater	0
Shell	0
Heater	.1
Cathode	400 ohms
Control Grid	250,000 ohms
Screen to B+	0
Screen to Ground	130,000 ohms
Plate to B+	310 ohms

5Y3

Filament to B+	1,400 ohms
Shell	0
Filament to B+	1,400 ohms
Plate	155 ohms
Plate	140 ohms
Plate to Plate	295 ohms

COIL AND TRANSFORMER RESISTANCES

A Band Ant. Pri.	.20 ohms
A Band Ant. Sec.	5. ohms
A Band R. F. Pri.	1.35 ohms
A Band R. F. Sec.	5. ohms
A Band Osc. Pri.	2.0 ohms
A Band Osc. Sec.	7.0 ohms
B Band Ant. Pri.	1. ohms
B Band Ant. Sec.	.45 ohms
B Band R. F. Pri.	1.1 ohms
B Band R. F. Sec.	.9 ohms
B Band Osc. Pri.	1.2 ohms
B Band Osc. Sec.	.75 ohms
C Band Ant. Pri.	.75 ohms
C Band Ant. Sec.	.15 ohms
C Band R. F. Pri.	.9 ohms
C Band R. F. Sec.	.2 ohms
C Band Osc. Pri.	.5 ohms
C Band Osc. Sec.	.25 ohms
1st I. F. Trans. Pri.	8.2 ohms
1st I. F. Trans. Sec.	14.2 ohms
2nd I. F. Trans. Pri.	13.0 ohms
2nd I. F. Trans. Sec.	13.0 ohms
Power Trans. 110 V. Pri.	13.0 ohms
Power Trans. 5 V. Sec.	.3 ohms
Power Trans. 6 V. Sec.	1.0 ohms
Power Trans. Hi-V. Sec.	155-0-140 ohms
Output Trans. Pri.	310 ohms
Output Trans. Sec.	.4 ohms
Speaker Field	1400 ohms
Speaker Voice Coil	.50 ohms

FREQUENCY RANGE: 535—1700 Kilocycles
1700—5500 Kilocycles
5.5—18.5 Megacycles

POWER OUTPUT: 3.5 Watts

VOLTAGE AND FREQUENCY: 105-125 Volts, 60 Cycles

WATTS POWER CONSUMPTION: 85 Watts

©John F. Rider, Publisher

MODELS 617,627
Socket,Trimmers
Chassis

NOBLITT SPARKS INDUSTRIES

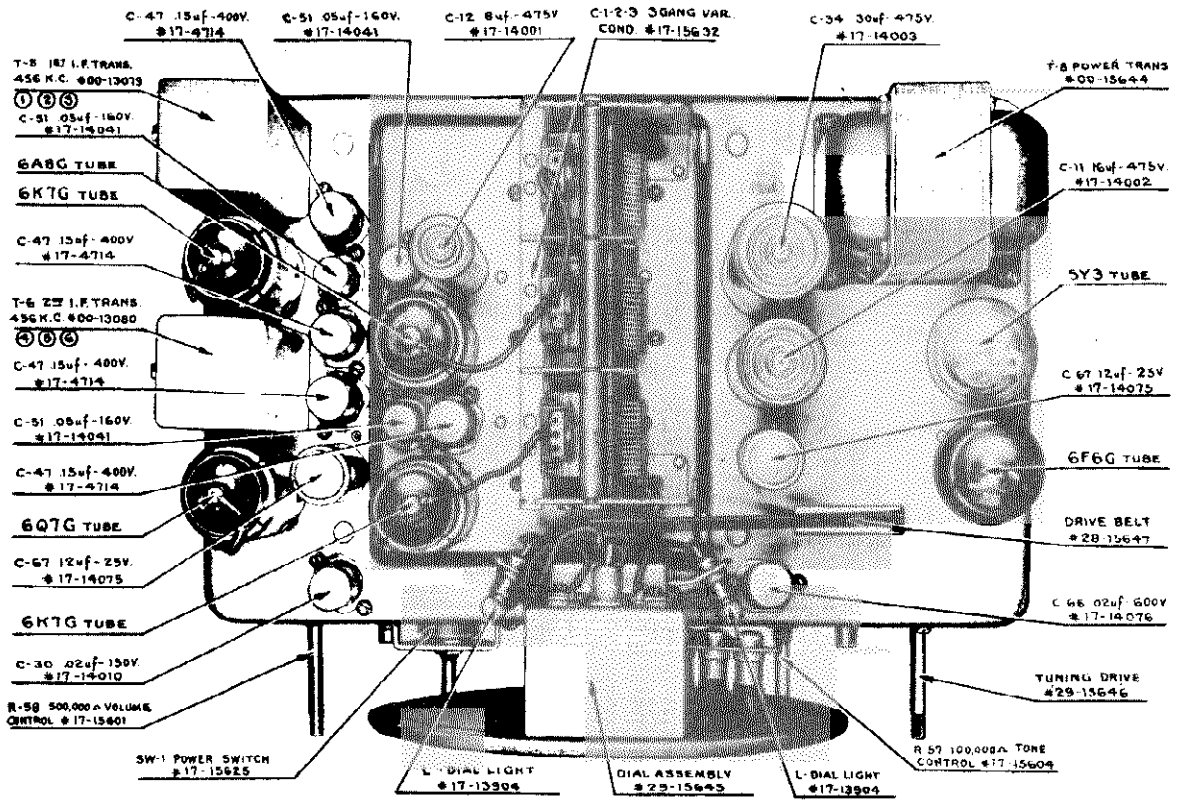

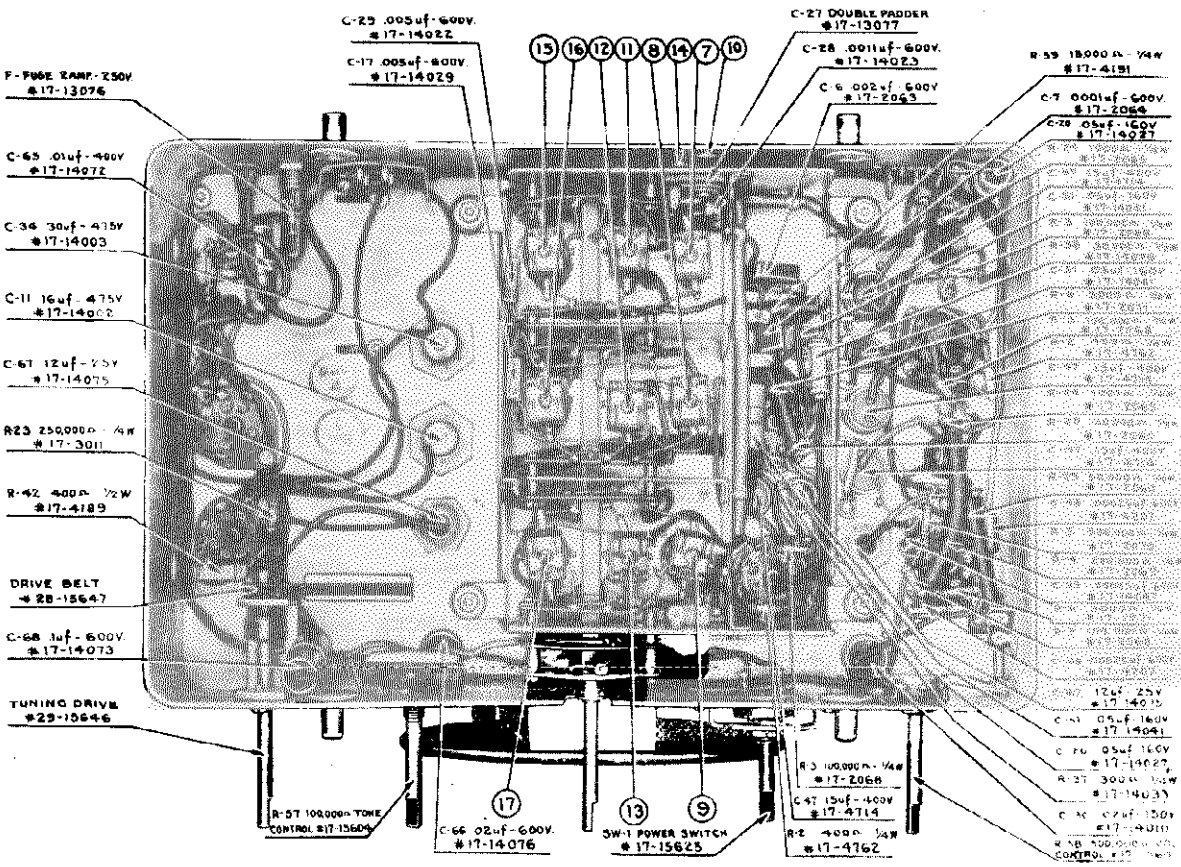

©John F. Rider, Publisher

NOBLITT SPARKS INDUSTRIES

MODELS 617-B, 627-B
Schematic, Voltage
Resistance, Coils
Parts

SEE INDEX FOR ALIGNMENT

SCHEMATIC CIRCUIT DIAGRAM
ARVIN HOME RADIO MODELS 617B & 627B

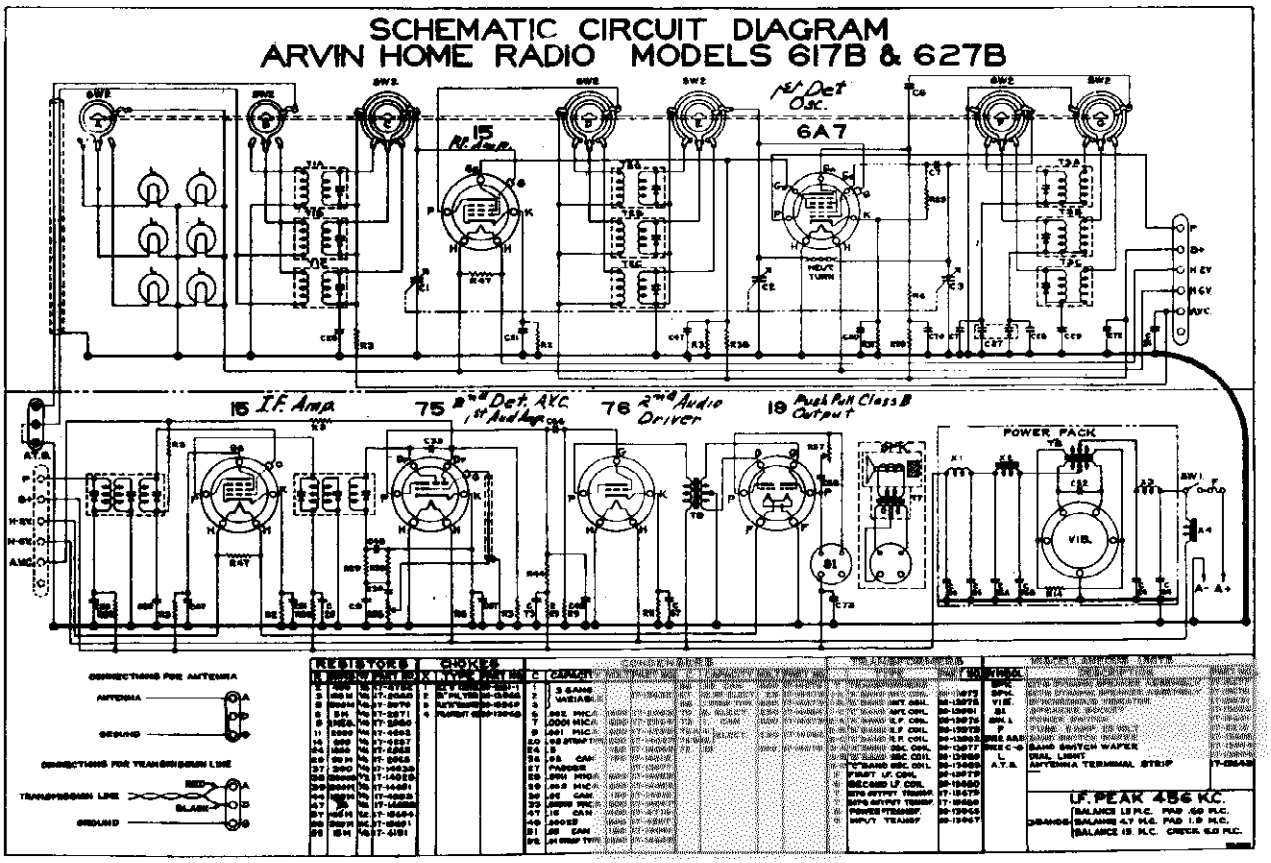

MODELS 617B-627B SOCKET VOLTAGES

Tube	Filament of Heater	Plate	Screen	Cathode	Oscillator Grid	Anode Grid
15	2.0	135	55	.7	....	....
6A7	6.0	135	55	1.4	2.4	135
15	2.0	135	75	1.2	....	....
75	6.0	65	....	.8	....	....
76	6.0	140	....	5.6	....	....
19	2.0	140	....	....	....	....

POINT TO POINT RESISTANCES

All readings taken to ground unless otherwise specified

15

Heater	50 ohms
Heater	20 ohms
Cathode	400 ohms
Screen to B+	20,000 ohms
Screen to Ground	100,000 ohms
Plate to B+	1.35-1.1-.9 ohms
Control Grid	700,000 ohms

6A7

Heater	0
Heater	2 ohms
Cathode	300 ohms
Oscillator Grid	50,300 ohms
Anode Grid to B+	20,000 ohms
Screen to B+	30,000 ohms
Screen to Ground	100,000 ohms
Plate to B+	1,000 ohms
Control Grid	5-.45-.15 ohms

15

Heater	50 ohms
Heater	2 ohms
Cathode	400 ohms
Screen to B+	100,000 ohms
Screen to Ground	230,000 ohms
Plate to B+	1,000 ohms
Control Grid	700,000 ohms

75

Heater	0
Heater	2 ohms
Cathode	5,000 ohms
Diode	100,000 ohms
Diode	355,000 ohms
Plate to B+	200,000 ohms
Control Grid	500,000 ohms

76

Heater	0
Heater	2 ohms
Cathode	2,000 ohms
Control Grid	1,000,000 ohms
Plate to B+	265 ohms

19

Filament	0
Filament	52 ohms
Grid	150 ohms
Grid	150 ohms
Plate to B+	175 ohms
Plate to B+	175 ohms

COIL AND TRANSFORMER RESISTANCES

A Band Ant. Pri.	30. ohms
A Band Ant. Sec.	5. ohms
A Band R. F. Pri.	1.35 ohms
A Band R. F. Sec.	5. ohms
A Band Osc. Pri.	2.0 ohms
A Band Osc. Sec.	7.0 ohms
B Band Ant. Pri.	1. ohms
B Band Ant. Sec.	.45 ohms
B Band R. F. Pri.	1.1 ohms
B Band R. F. Sec.	.9 ohms
B Band Osc. Pri.	1.2 ohms
B Band Osc. Sec.	.75 ohms
C Band Ant. Pri.	.75 ohms
C Band Ant. Sec.	.15 ohms
C Band R. F. Pri.	.9 ohms
C Band R. F. Sec.	.2 ohms
C Band Osc. Pri.	.5 ohms
C Band Osc. Sec.	.25 ohms
1st I. F. Trans. Pri.	8.2 ohms
1st I. F. Trans. Sec.	14.2 ohms
2nd I. F. Trans. Pri.	13.0 ohms
2nd I. F. Trans. Sec.	13.0 ohms
Power Trans. Pri.	1.0-.1 ohms
Power Trans. Hi-V. Sec.	170-0-170 ohms
Output Trans. Pri.	175-0-175 ohms
Output Trans. Sec.	.4 ohms
Speaker Voice Coil	.50 ohms
Input Audio Trans. Pri.	265 ohms
Input Audio Trans. Sec.	150-0-150 ohms

©John F. Rider Publisher

MODELS 617-B, 627-B
Socket, Trimmers
Chassis

NOBLITT SPARKS INDUSTRIES

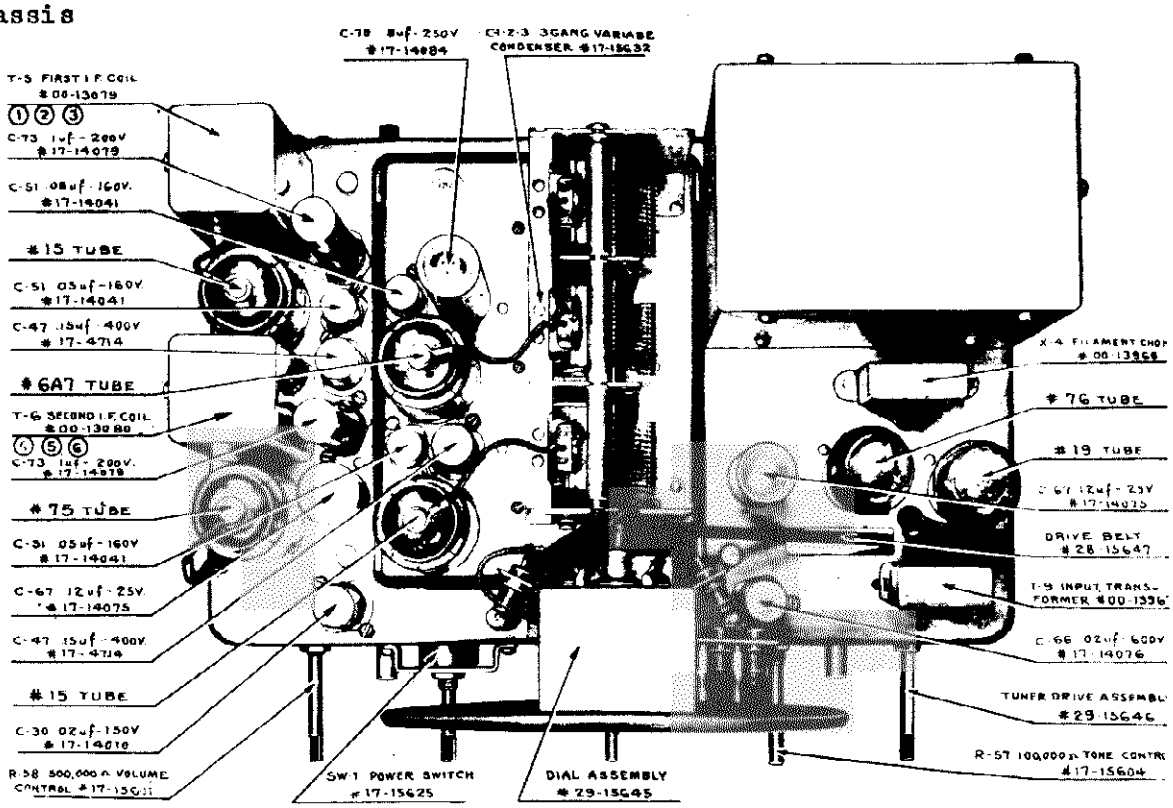

FREQUENCY RANGE: 535—1700 Kilocycles
1700—5500 Kilocycles
5.5—18.5 Megacycles

SPEAKER: 8" Permaflux Dynamic—617B
10" Permaflux Dynamic—627B

AMPERE DRAIN: 3 Amperes

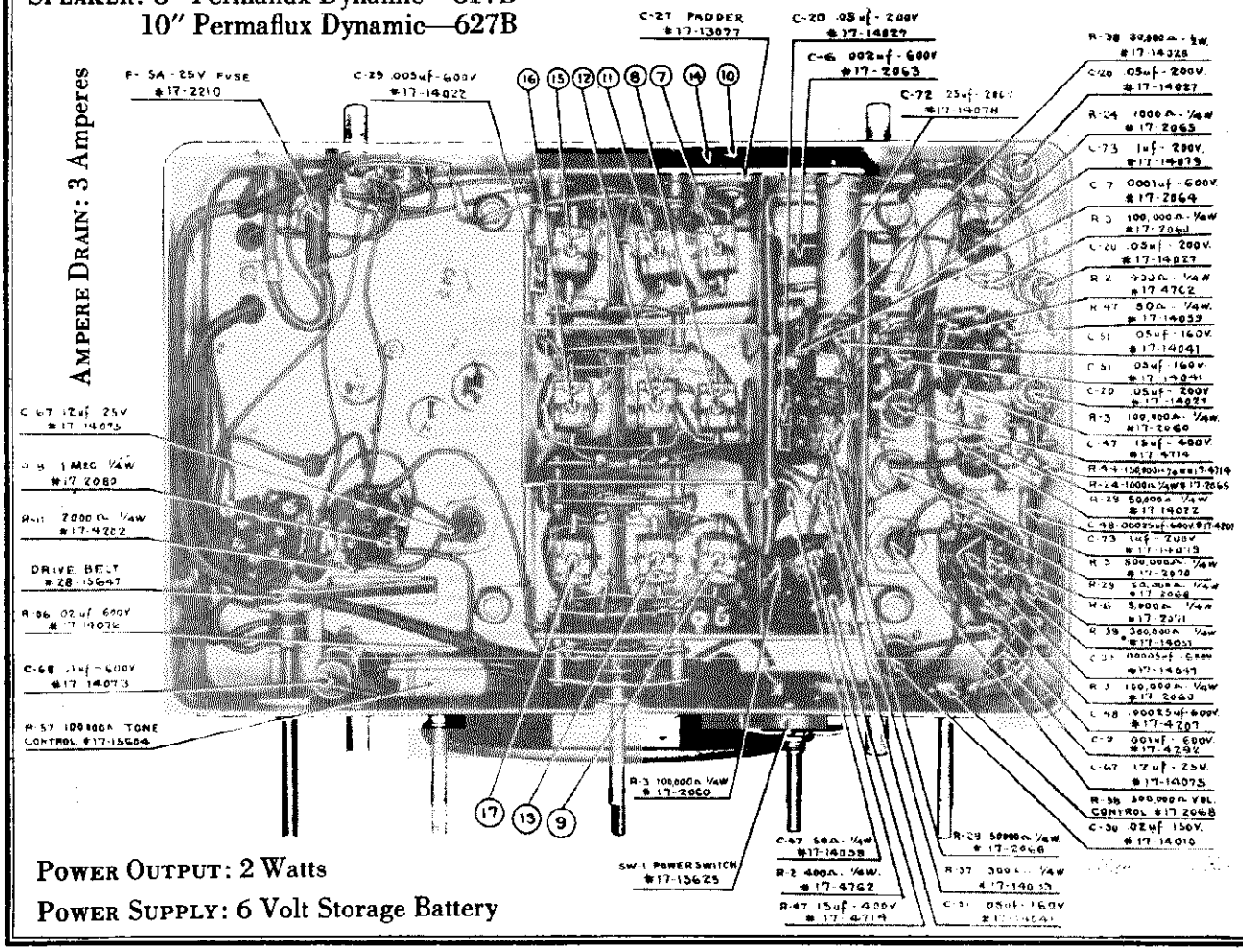

POWER OUTPUT: 2 Watts

POWER SUPPLY: 6 Volt Storage Battery

NOBLITT SPARKS INDUSTRIES

MODEL 927
Schematic, Voltage
Resistance, Coils
Parts

SCHEMATIC CIRCUIT DIAGRAM
ARVIN HOME RADIO MODEL 927

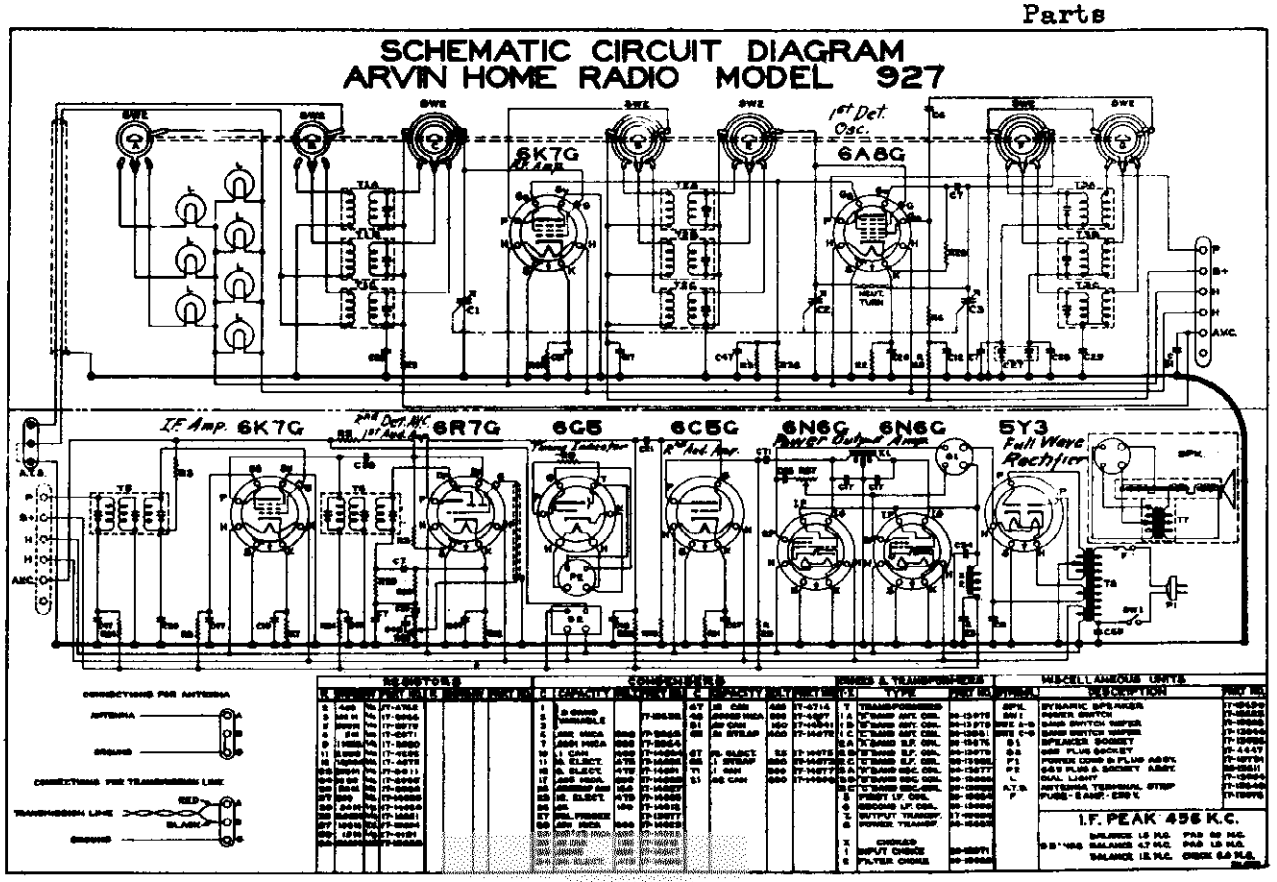

MODEL 927 SOCKET VOLTAGES

Tube	Heaters	Cathode	Suppressor Grid	Screen Grid	Plate	Oscillator Grid	Anode Grid	Shell
6K7G	6.3	2.5	0	95	250	..	..	0
6A8G	6.3	3.0	..	95	250	8	175	0
6K7G	6.3	3.0	0	95	250	..	..	0
6R7G	6.3	.6	..	....	65	..	..	0
6C5G	6.3	4.0	..	....	120	..	..	0
6N6G	6.3	0	..	260	250	..	..	0
6N6G	6.3	0	..	260	250	..	..	0
5Y3	5.0	....	..	....	.....	..	..	0
6G5	6.3	0	..	....	250	..	..	

POINT TO POINT RESISTANCES

SEE INDEX FOR ALIGNMENT

6K7G

Heater	0
Shell	0
Heater	.1
Cathode	300 ohms
Suppressor	0
Screen	100,000 ohms
Plate to B+	1.35 ohms
Control Grid	700,000 ohms
Screen to B+	30,000 ohms

6A8G

Heater	0
Shell	0
Heater	.1
Cathode	400 ohms
Oscillator Grid	50,400 ohms
Anode Grid to B+	20,000 ohms
Screen	100,000 ohms
Plate to B+	1,000 ohms
Control Grid	.5-9-2 ohms
Screen to B+	30,000 ohms

6K7G

Heater	0
Shell	0
Heater	.1
Cathode	400 ohms
Suppressor	0
Screen to B+	100,000 ohms
Plate to B+	1,000 ohms
Control Grid	700,000 ohms

6R7G

Heater	0
Shell	0
Heater	.1
Cathode	10,000 ohms
Diode	360,000 ohms
Diode	100,000 ohms
Control Grid	500,000 ohms
Plate to B+	250,000 ohms

6C5G

Heater	0
Shell	0
Heater	.1
Cathode	2,000 ohms
Control Grid	250,000 ohms
Control Grid	250,000 ohms

6N6G

Heater	0
Shell	0
Heater	.1

6N6G

Cathode	0
Screen to B+	120 ohms
Plate to B+	330 ohms
Control Grid	2,500 ohms

6N6G

Heater	0
Shell	0
Heater	.1
Cathode	0
Screen to B+	120 ohms
Plate to B+	330 ohms
Control Grid	2,500 ohms

5Y3

Filament	131,000 ohms
Shell	0
Filament	131,000 ohms
Plate	110 ohms
Plate	120 ohms

6G5

Heater	0
Heater	.1
Cathode	0
Control Grid	600,000 ohms
Plate to B+	1,000,000 ohms
Target to B+	0

COIL, TRANSFORMER AND SPEAKER RESISTANCES

T1A Broadcast Ant. Pri.	19.00 ohms
T1A Broadcast Ant. Sec.	4.70 ohms
T1B Mid Wave Ant. Pri.	.43 ohms
T1B Mid Wave Ant. Sec.	.55 ohms
T1C Short Wave Ant. Pri.	.26 ohms
T1C Short Wave Ant. Sec.	.05 ohms
T2A Broadcast R. F. Pri.	.90 ohms
T2A Broadcast R. F. Sec.	5.50 ohms
T2B Mid Wave R. F. Pri.	.72 ohms
T2B Mid Wave R. F. Sec.	.50 ohms
T2C Short Wave R. F. Pri.	.50 ohms
T2C Short Wave R. F. Sec.	.05 ohms
T3A Broadcast Osc. Pri.	8.20 ohms
T3A Broadcast Osc. Sec.	.67 ohms
T3B Mid Wave Osc. Pri.	.58 ohms
T3B Mid Wave Osc. Sec.	.47 ohms
T3C Short Wave Osc. Pri.	.50 ohms
T3C Short Wave Osc. Sec.	.05 ohms
T5 First I. F. Pri.	9.00 ohms
T5 First I. F. Sec.	13.50 ohms
T6 Second I. F. Pri.	9.00 ohms
T6 Second I. F. Sec.	13.50 ohms
T7 Speaker Trans. Pri.	410.00 ohms
Speaker Field (Cold)	680.00 ohms
T8 Power Trans. Pri.	3.68 ohms
T8 Power Trans. 5V Sec.	.108 ohms
T8 Power Trans. 6V Sec.	.115 ohms
T8 Power Trans. H. V. Sec.	124-129-253
X2 "B" Filter Choke	120.00 ohms
X1 Audio Input Choke	1500.00 ohms

©John F. Rider, Publisher

MODEL 927
Socket, Trimmers
Chassis

NOBLITT SPARKS INDUSTRIES

CABINET DIMENSIONS:

Height	Width	Depth
40″	25-1/16″	12⅞″

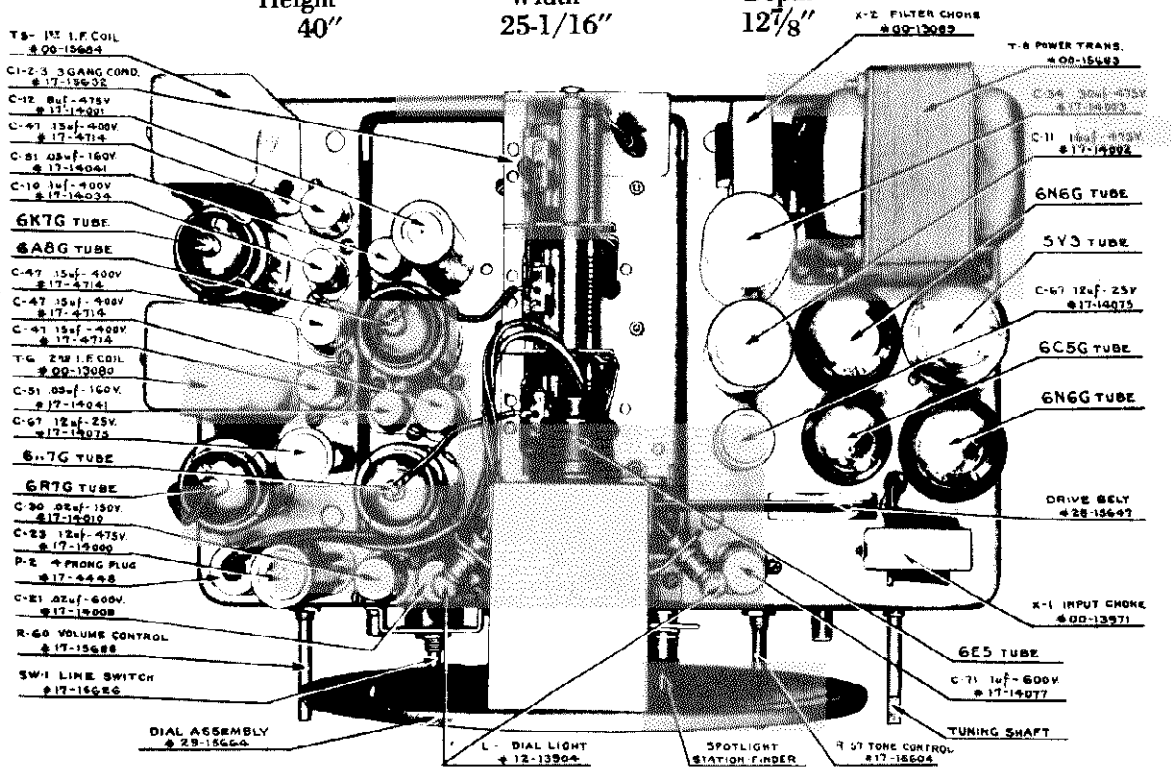

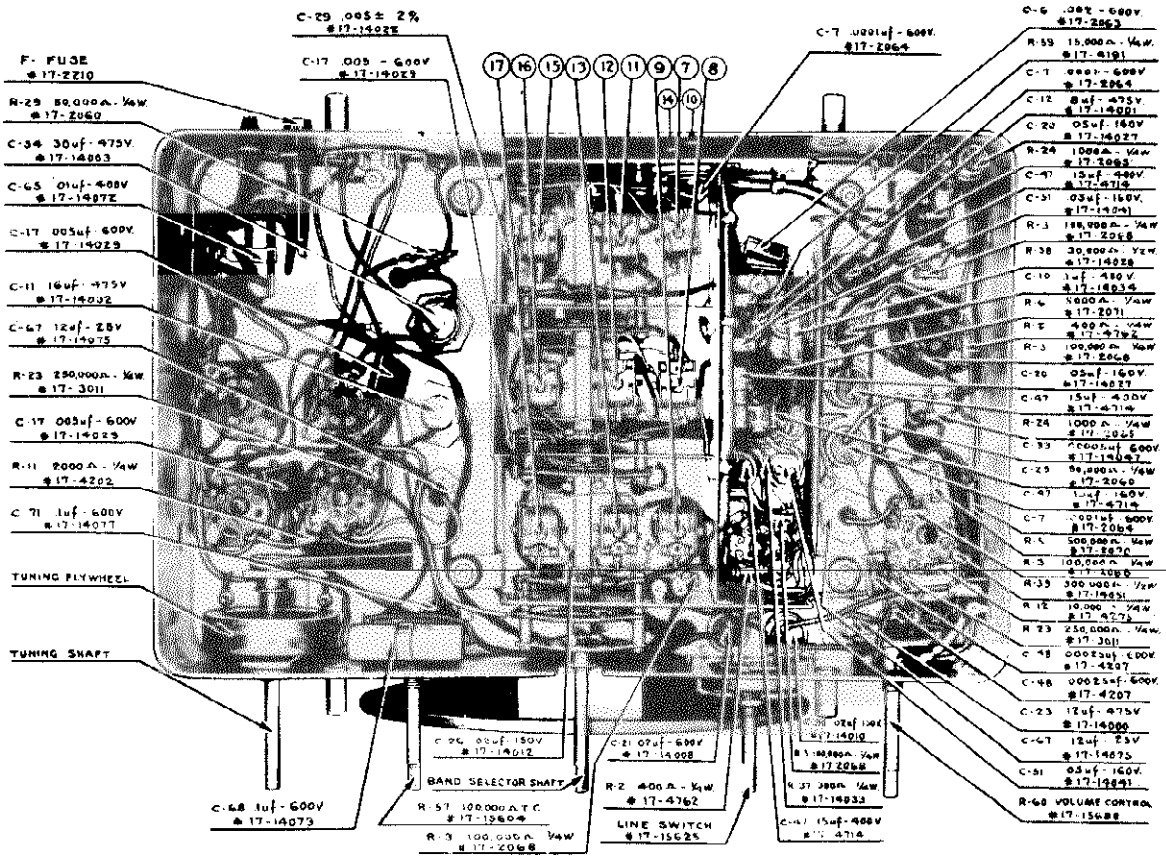

FREQUENCY RANGE: 535—1700 Kilocycles
1700—5500 Kilocycles
5.5—18.5 Megacycles

POWER OUTPUT: 8 Watts

VOLTAGE AND FREQUENCY: 105-125 Volts, 60 Cycles

WATTS POWER CONSUMPTION: 120 Watts

MODEL 1127
Schematic, Voltage
Resistance, Parts

NOBLITT SPARKS INDUSTRIES

SCHEMATIC CIRCUIT DIAGRAM
ARVIN HOME RADIO MODEL 1127

For Alignment, see Index

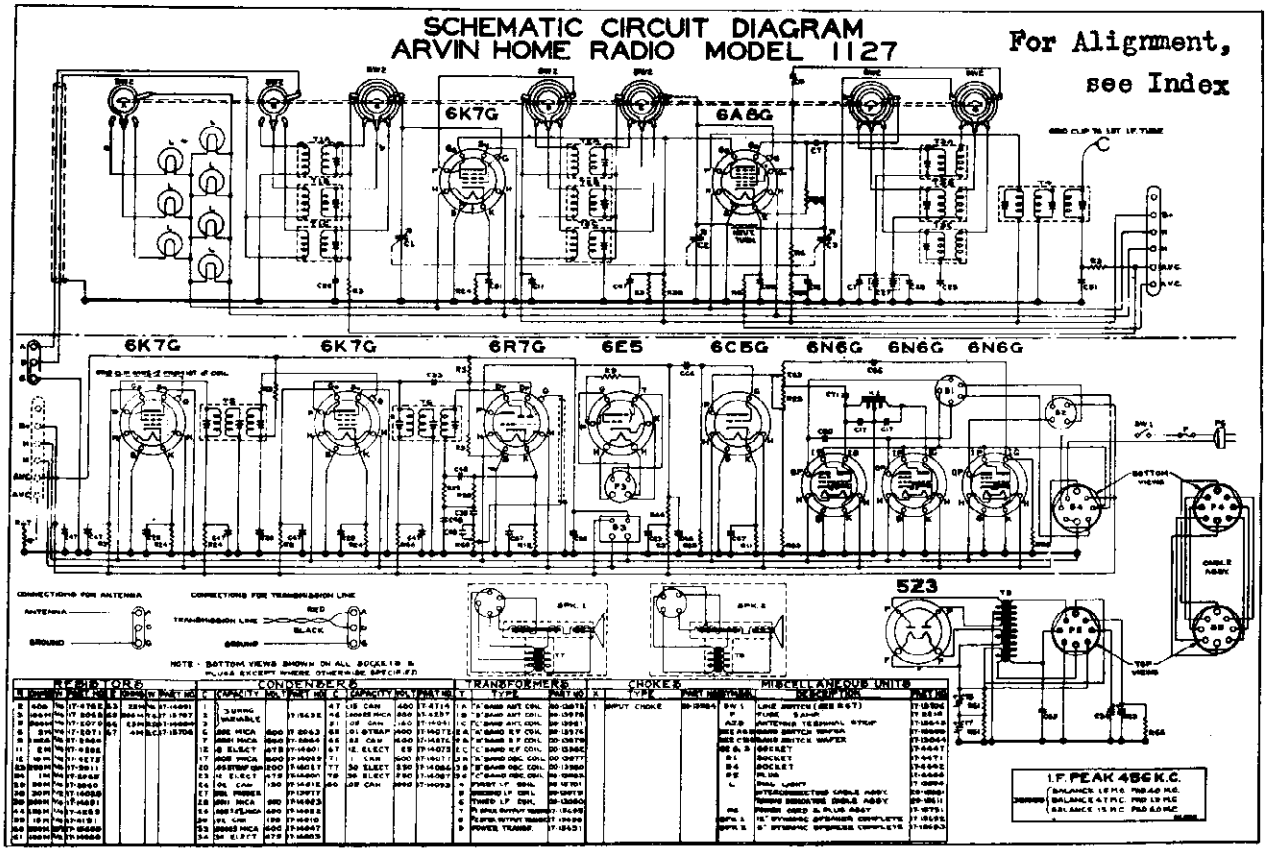

MODEL 1127 SOCKET VOLTAGES

Tube	Heaters	Cathode	Suppressor Grid	Screen Grid	Plate	Oscillator Grid—1,500 K. C.	Anode Grid	Shell
6K7G	6.3	4.2	0	100	230	....	....	0
6A8G	6.3	3.6	....	105	235	11	140	0
6K7G	6.3	5.0	0	90	225	....	....	0
6K7G	6.3	4.8	0	100	225	....	....	0
6R7G	6.3	3.4	....	....	70	....	....	0
6C5G	6.3	5.0	....	....	155	....	....	0
6N6G	6.3	....	....	325	320	....	....	0
6N6G	6.3	....	....	325	320	....	....	0
6N6G	6.3	....	....	325	300	....	....	0
5Y3	5.0	....	....	....	....	....	....	0
6G5	6.3	0	....	....	250	....	....	0

POINT TO POINT RESISTANCES

6K7G

Heater	0
Shell	0
Heater	.5 ohms
Cathode	1,000 ohms
Suppressor	0
Screen to B+	80,000 ohms
Plate to B+	1.35-1.1-.7 ohms
Screen	100,000 ohms
Control Grid	700,000 ohms
Screen to Cround	100,000 ohms

6A8G

Heater	0
Shell	0
Heater	.5 ohms
†Cathode	400 ohms
Oscillator Grid	50,400 ohms
Anode Grid to B+	20,000 ohms
Screen to Gnd.	100,000 ohms
Screen to B+	80,000 ohms
Plate to B+	15 ohms
Control Grid	5.-9-2 ohms

6K7G

Heater	0
Shell	0
Heater	.5 ohms
Cathode	1,000 ohms
Suppressor	0
Screen to B+	100,000 ohms
Plate to B+	1,000 ohms
Control Grid	700,000 ohms

†Sensitivity Control Turned to extreme right.

6K7G

Heater	0
Shell	0
Heater	.5 ohms
Cathode	1,000 ohms
Suppressor	0
Screen to B+	100,000 ohms
Plate to B+	1,000 ohms
Control Grid	700,000 ohms

6R7G

Heater	0
Shell	0
Heater	.5 ohms
Cathode	10,000 ohms
Diode	100,000 ohms
Diode	360,000 ohms
Plate to B+	250,000 ohms
*Control Grid	500,000 ohms

6C5G

Heater	0
Shell	0
Heater	.5 ohms
Cathode	2,000 ohms
Plate to B+	25,000 ohms
Control Grid	250,000 ohms

6N6G

Heater	0
Shell	0
Heater	.5 ohms
Cathode	0

*Volume control turned to extreme right.

Screen to B+	0
Plate to B+	250 ohms
Control Grid	2,500 ohms

6N6G—Push Pull

Heater	0
Shell	0
Heater	.5 ohms
Cathode	0
Screen to B+	0
Plate to B+	250 ohms
Control Grid	2,500 ohms

6N6G—Single

Heater	0
Shell	0
Heater	.5 ohms
Cathode	0
Screen to B+	0
Plate to B+	450 ohms
Control Grid	50,000 ohms

5Z3

Filament to Gnd.	5,000 ohms
Filament to B+	2,090 ohms
Plate	65 ohms
Plate	65 ohms

6G5

Heater	0
Heater	.5 ohms
Cathode	0
Control Grid	600,000 ohms
Target to B+	0
Plate to B+	1,000,000 ohms

©John F. Rider, Publisher

MODEL 1127
Socket, Trimmers
Chassis

NOBLITT SPARKS INDUSTRIES

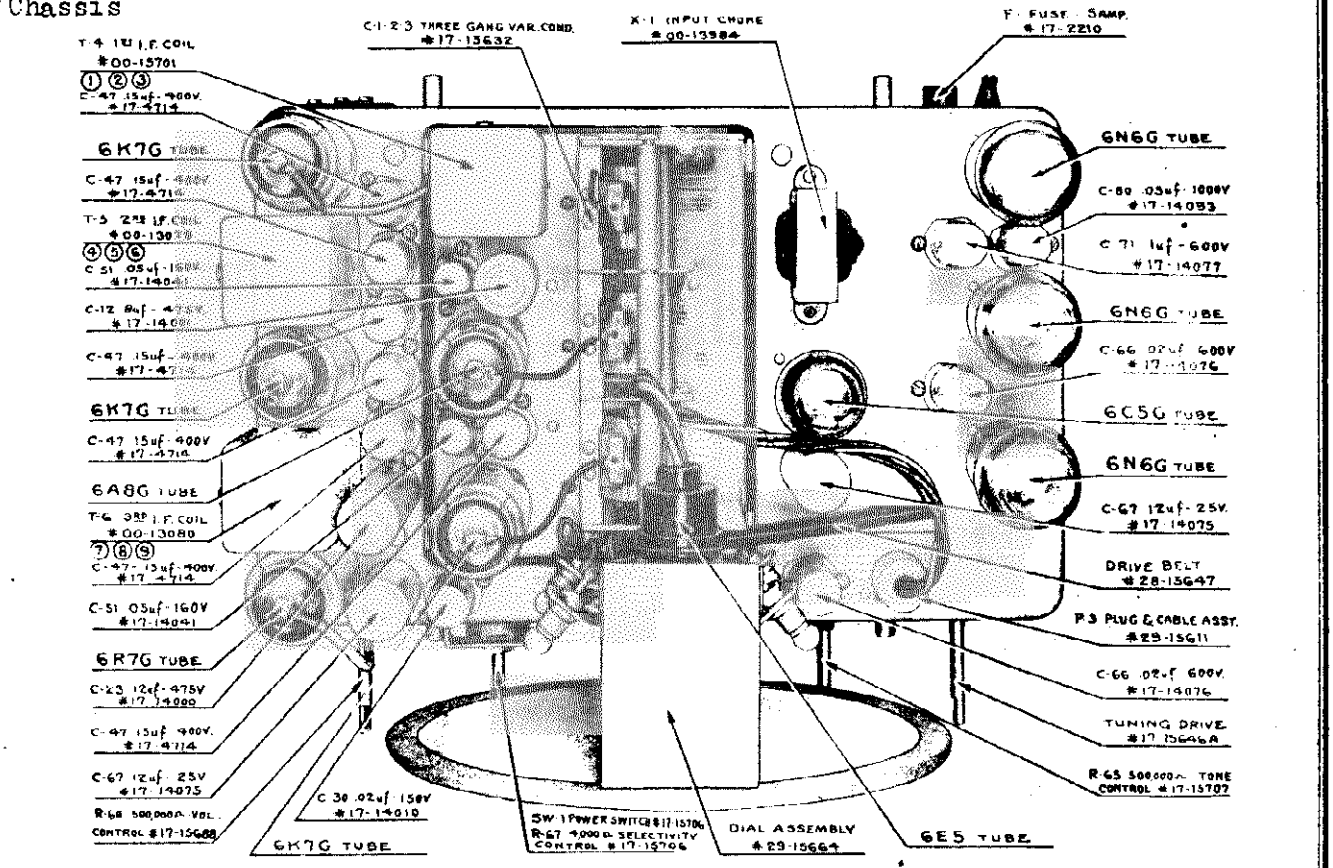

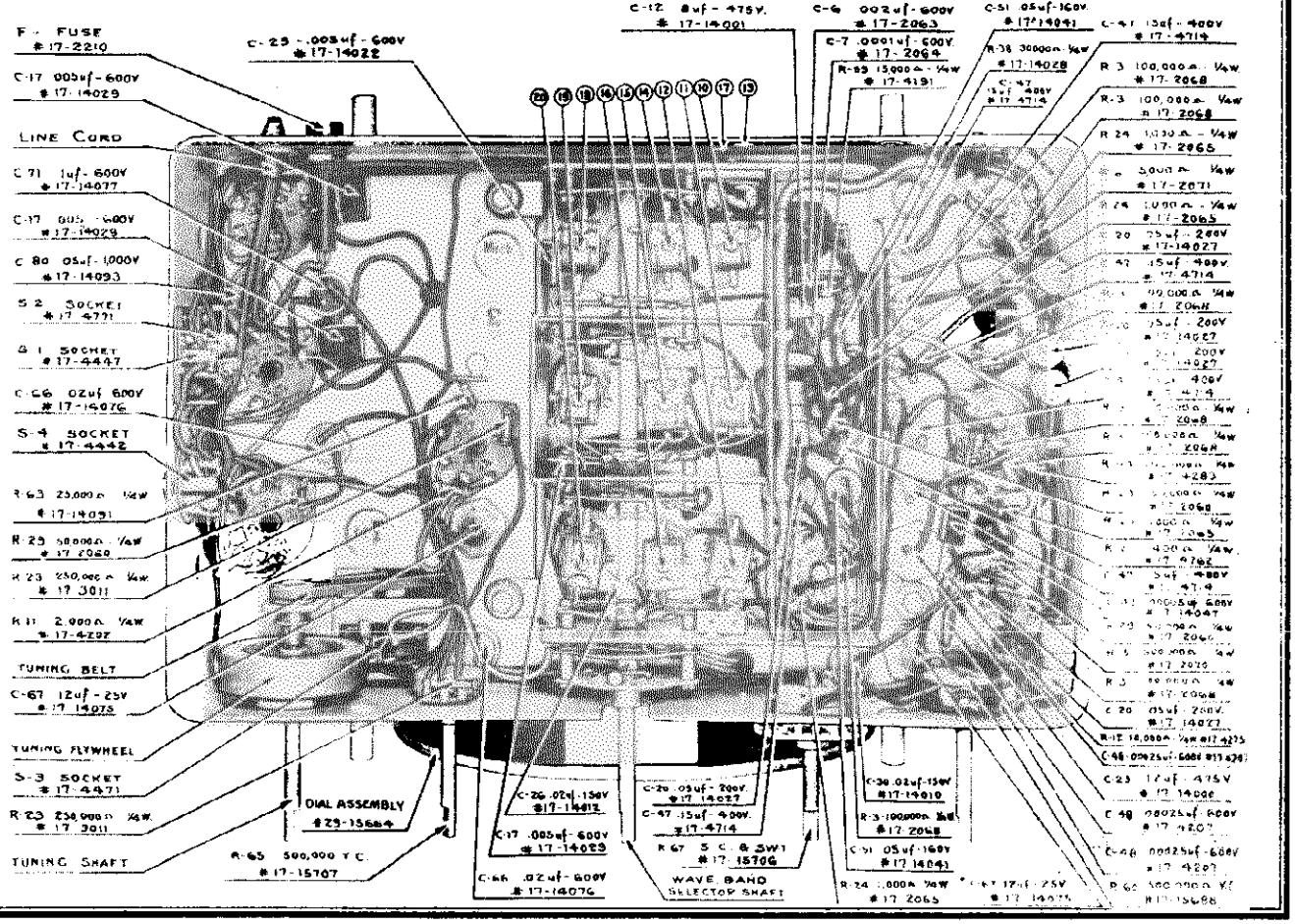

MODEL 1127
Coil Data
Data
Power Supply Layout

NOBLITT SPARKS INDUSTRIES

COIL, TRANSFORMER AND SPEAKER RESISTANCES

A Band Ant. Pri.	20. ohms	C Band Ant. Sec.	.15 ohms	Power Transformer 110 V. Pri.	2.2 ohms
A Band Ant. Sec.	5. ohms	C Band R. F. Pri.	.9 ohms	Power Transformer 6 V. Sec.	.5 ohms
A Band R. F. Pri.	1.35 ohms	C Band R. F. Sec.	.2 ohms	Power Transformer 5 V. Sec.	.15 ohms
A Band R. F. Sec.	5. ohms	C Band Osc. Pri.	.5 ohms	Power Transformer Hi. V. Sec.	65-0-65 ohms
A Band Osc. Pri.	2.0 ohms	C Band Osc. Sec.	.25 ohms	Output Transformer (12" Speaker) Pri.	250-0-250 ohms
A Band Osc. Sec.	7. ohms	1st I. F. Trans. Pri.	8.2 ohms	Output Transformer (12" Speaker) Sec.	1.3 ohms
B Band Ant. Pri.	1. ohms	1st I. F. Trans. Sec.	14.2 ohms	Output Transformer (6" Speaker) Pri.	450 ohms
B Band Ant. Sec.	.45 ohms	2nd I. F. Trans. Pri.	8.2 ohms	Output Transformer (6" Speaker) Sec.	.8 ohms
B Band R. F. Pri.	1.1 ohms	2nd I. F. Trans. Sec.	14.2 ohms	6" Speaker Voice Coil	.6 ohms
B Band R. F. Sec.	.9 ohms	3rd I. F. Trans. Pri.	13.0 ohms	6" Speaker Field	140-0-1,600 ohms
B Band Osc. Pri.	1.2 ohms	3rd I. F. Trans. Sec.	13.0 ohms	12" Speaker Voice Coil	.4 ohms
B Band Osc. Sec.	.75 ohms	Audio Input Impedance	2,500-0-2,500 ohms	12" Speaker Field	250 ohms
C Band Ant. Pri.	.75 ohms				

ELECTRICAL DATA

Tubes:

6K7G—R. F. Amplifier
6A8G—1st Detector, Oscillator
6K7G—1st I. F. Amplifier
6K7G—2nd I. F. Amplifier
6R7G—2nd Detector, Automatic Volume Control, 1st Audio Amplifier
6C5G—2nd Audio Amplifier (Low Frequency)
6N6G—Push-Pull Low Frequency Amplifier
6N6G—Push-Pull Low Frequency Amplifier
6N6G—High Frequency Amplifier
5Z3—Full Wave Rectifier
6G5—Cathode Ray Tuning Indicator

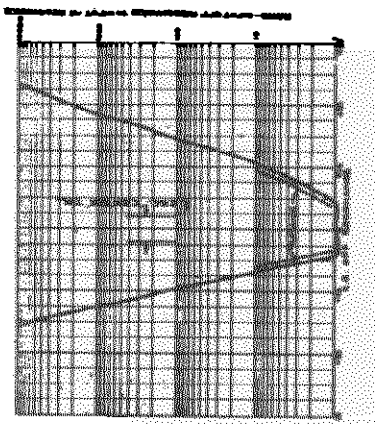

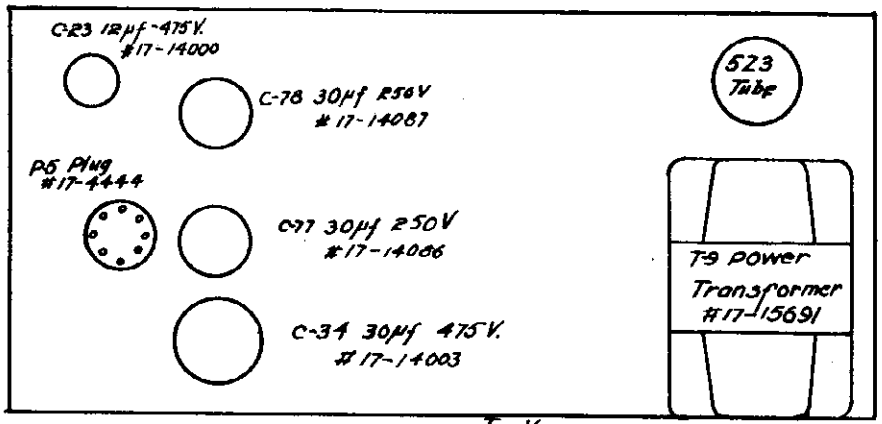

POWER SUPPLY

Top View

Bottom View

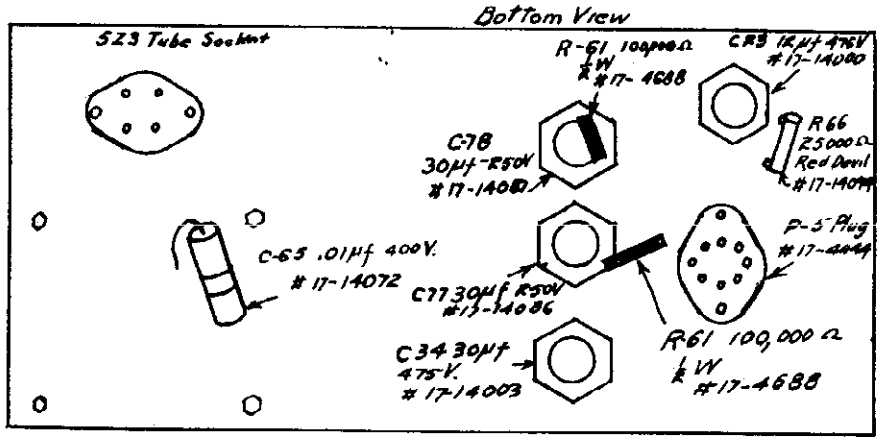

Frequency Range:
535—1700 Kilocycles
1700—5500 Kilocycles
5.5—18.5 Megacycles

Power Output: 12 Watts

Voltage and Frequency: 105-125 Volts, 60 Cycles

Watts Power Consumption: 150 Watts

Cabinet Dimensions:
Height 42½"
Width 26⅝"
Depth 12-11/16"

©John F. Rider, Publisher

MODELS 617,617-B,627,
627-B,927,1127
Alignment

NOBLITT SPARKS INDUSTRIES

MODELS 617, 617B, 627, 627B, and 927.

BALANCING INSTRUCTIONS

1. Connect the balancing oscillator (456 K. C.) to grid cap of the 1st Det. Connect an output meter or cathode ray oscillograph to speaker output transformer or across speaker voice coil.
2. Adjust padder condensers 1, 2, 3, 4, 5 and 6 for maximum output in the order designated by their numbering.
3. Recheck the adjustment of each padder beginning with number 1 to prevent interlocking of circuits.
4. Disconnect oscillator from Det. grid cap and replace grid clip.
5. Connect oscillator to terminal on rear of set marked "A." Ground oscillator cable shield to terminals marked "D" and "G."
6. Set the wave band switch to broadcast position. Rotate the condenser fully out of mesh and adjust padder number 7 for resonance at 1650 K. C.
7. Rotate the dial pointer until it is opposite 140 on the broadcast band and adjust padders 8 and 9 for maximum output.
8. Reset the balancing oscillator to 600 K. C. and rotate the tuning condenser until this signal is received. Adjust padder number 10 for maximum output while rotating the tuning condenser slightly to follow the drift in frequency caused by the change in padder adjustment.
9. Reset the wave switch to the mid band position (5500-1750 K. C. range). Readjust the balancing oscillator to 4800 K. C. and set the dial pointer to 4.8 on the center dial calibration.
10. Adjust padder number 11 for resonance.
11. Adjust padders 12 and 13 for maximum output.
12. Reset balancing oscillator to 1800 K. C. Set the dial point to 1.8 on the center dial calibration.
13. Adjust padder number 14 for maximum output while rotating tuning condenser slightly to follow drift in frequency caused by the change in padder adjustment.
14. Reset the band switch to the short wave position (5.5-18.5 megacycles). Readjust the balancing oscillator to 16 megacycles and set the dial pointer opposite 16 on the short wave band.
15. Unscrew screw in padder number 15 until padder condenser plates are wide open. Then tighten selecting the first resonance point reached. (The short wave band will not function unless this precaution is taken.)
16. Adjust padders 16 and 17 until maximum output is obtained.

MODEL 1127

BALANCING INSTRUCTIONS

1. Connect the balancing oscillator (456 K. C.) to grid cap of the 6A8G tube. Connect an output meter or cathode ray oscillograph to speaker output transformer or plate of 6N6G tube.
2. Adjust padder condensers 1, 2, 3, 4, 5, 6, 7, 8, and 9 for maximum output in the order designated by their numbering until oscillograph trace shown in Fig. A is obtained.
3. Recheck the adjustment of each padder beginning with number 1 to prevent interlocking of circuits.
4. Disconnect oscillator from 6A8G grid cap and replace grid clip.
5. Connect oscillator to terminal on rear of set marked "A." Ground oscillator cable shield to terminals marked "D" and "G."
6. Set the wave band switch to broadcast position. Rotate the condenser fully out of mesh and adjust padder number 10 for resonance at 1650 K. C.
7. Rotate the dial pointer until it is opposite 140 on the broadcast band and adjust padders 11 and 12 for maximum output.
8. Reset the balancing oscillator to 600 K. C. and rotate the tuning condenser until this signal is received. Adjust padder number 13 for maximum output while rotating the tuning condenser slightly to follow the drift in frequency caused by the change in padder adjustment.
9. Reset the wave switch to the mid band position (5500-1750 K. C. range). Readjust the balancing oscillator to 4800 K. C. and set the dial pointer to 4.8 on the center dial calibration.
10. Adjust padder number 14 for resonance.
11. Adjust padders 15 and 16 for maximum output.
12. Reset balancing oscillator to 1800 K. C. Set the dial point to 1.8 on the center dial calibration.
13. Adjust padder number 17 for maximum output while rotating tuning condenser slightly to follow drift in frequency caused by the change in padder adjustment.
14. Reset the band switch to the short wave position (5.5-18.5 megacycles). Readjust the balancing oscillator to 16 megacycles and set the dial pointer opposite 16 on the short wave band.
15. Unscrew screw in padder number 18 until padder condenser plates are wide open. Then tighten selecting the first resonance point reached. (The short wave band will not function unless this precaution is taken).
16. Adjust padders 19 and 20 until maximum output is obtained.

©John F. Rider, Publisher

OPERADIO MFG. CO.

MODEL 683-A
Schematic

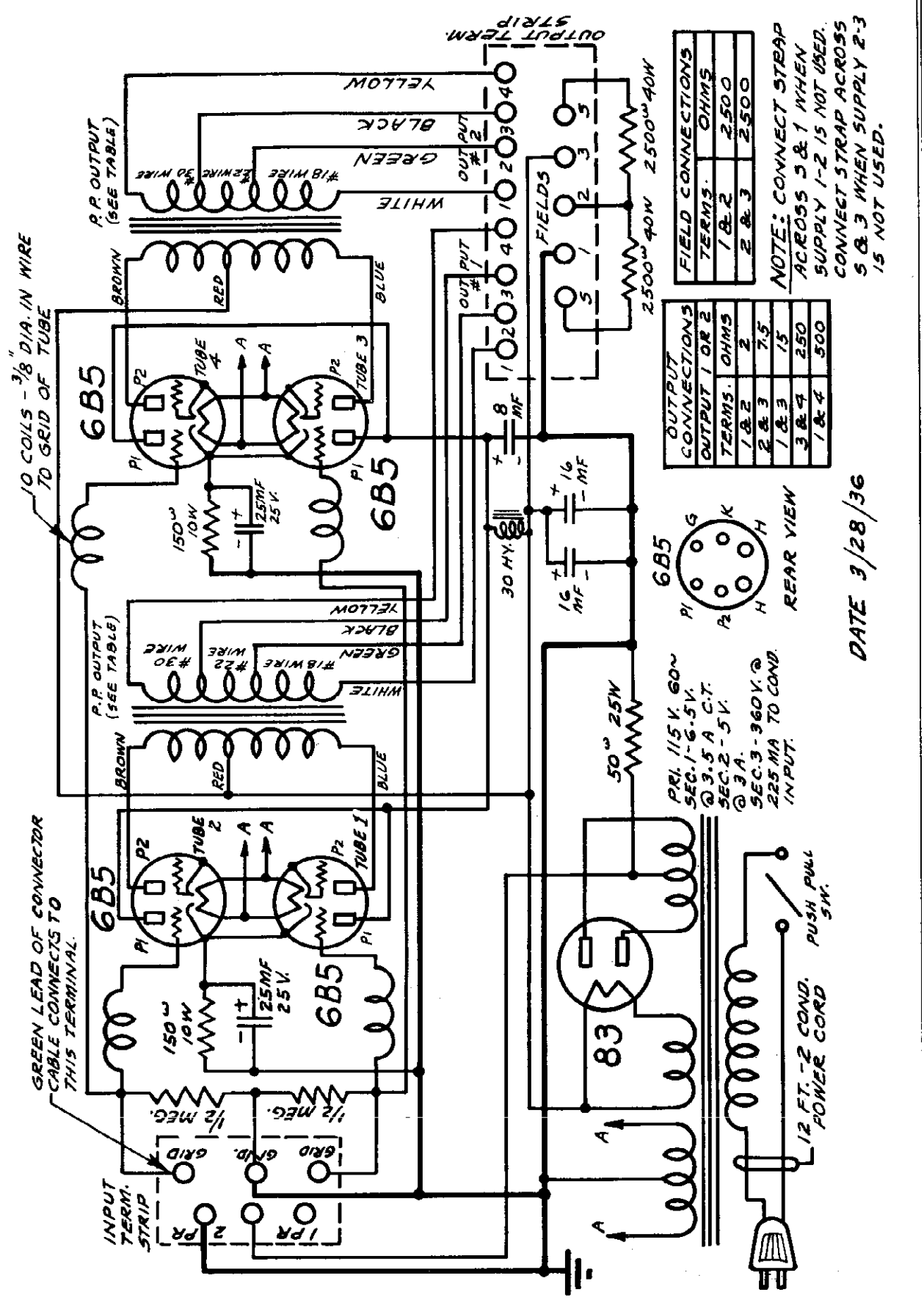

©John F. Rider, Publisher

MODELS 677-A, 2677-A
Schematic

OPERADIO MFG. CO.

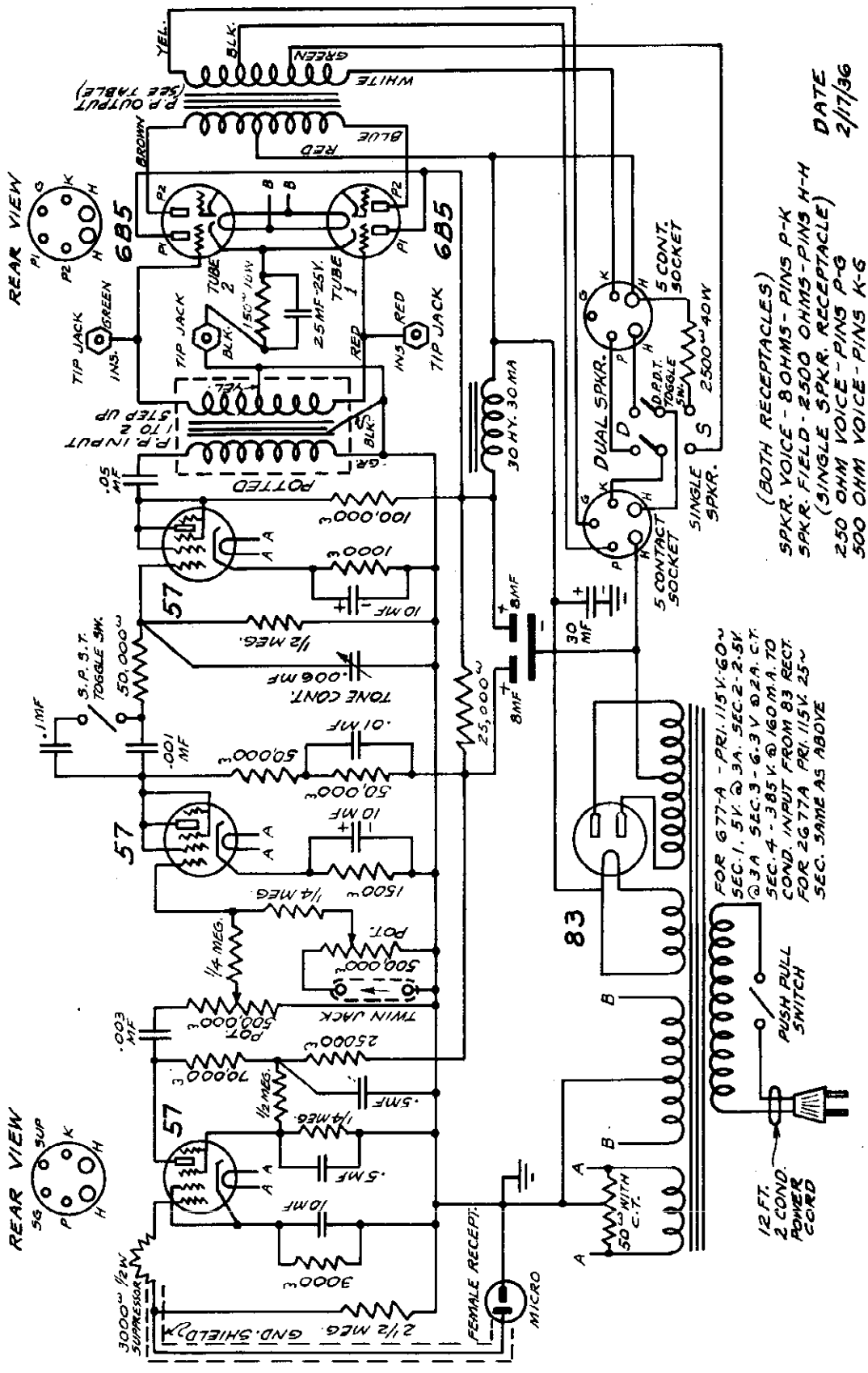

©John F. Rider, Publisher

MODEL 678-A
Schematic

OPERADIO MFG. CO.

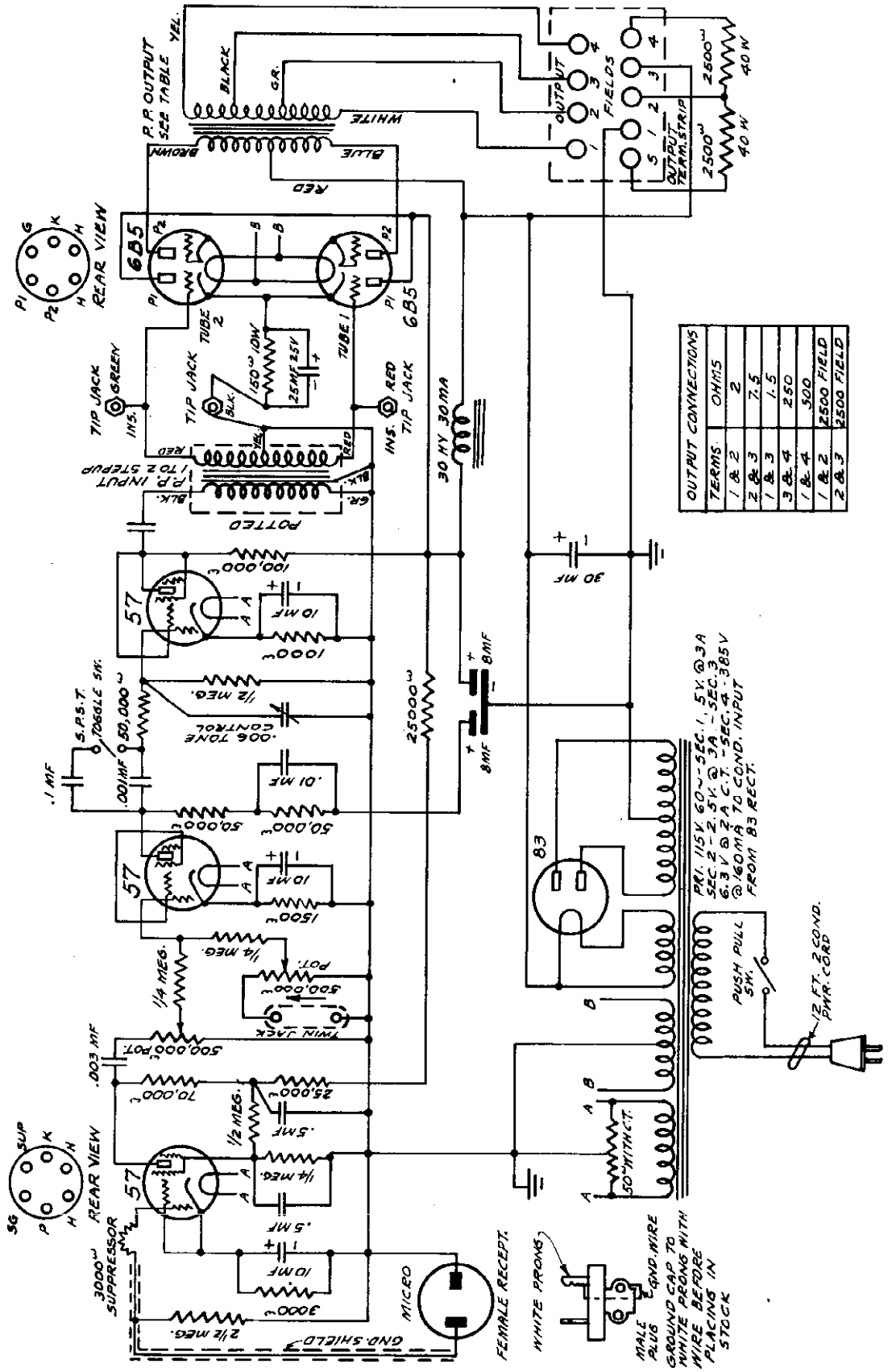

©John F. Rider, Publisher

MODEL 823-A
Schematic

OPERADIO MFG. CO.

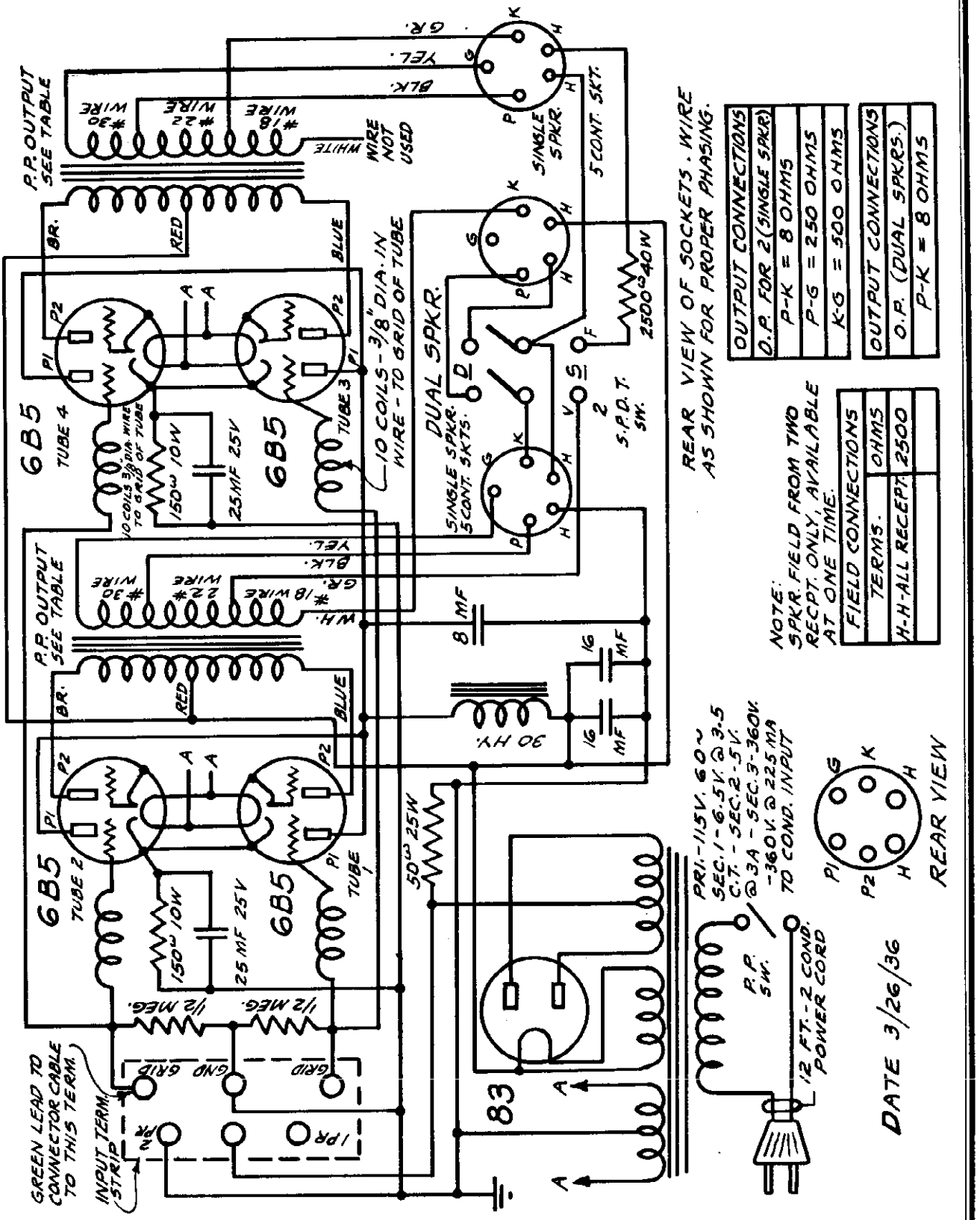

©John F. Rider, Publisher

MODEL 6V
Schematic
Alignmen

PACIFIC RADIO CORP.

ALIGNMENT:-

IF PEAKED AT 456 KC.
Align trimmers of 540-1710 band at 1500 KC.
Align osc. padders at 600 KC.
Align trimmers of 1700-5500 KC band at 5300 KC.
Align osc. padders at 1700 KC.
Align trimmers of 5500-16500 KC band at 14000 KC.

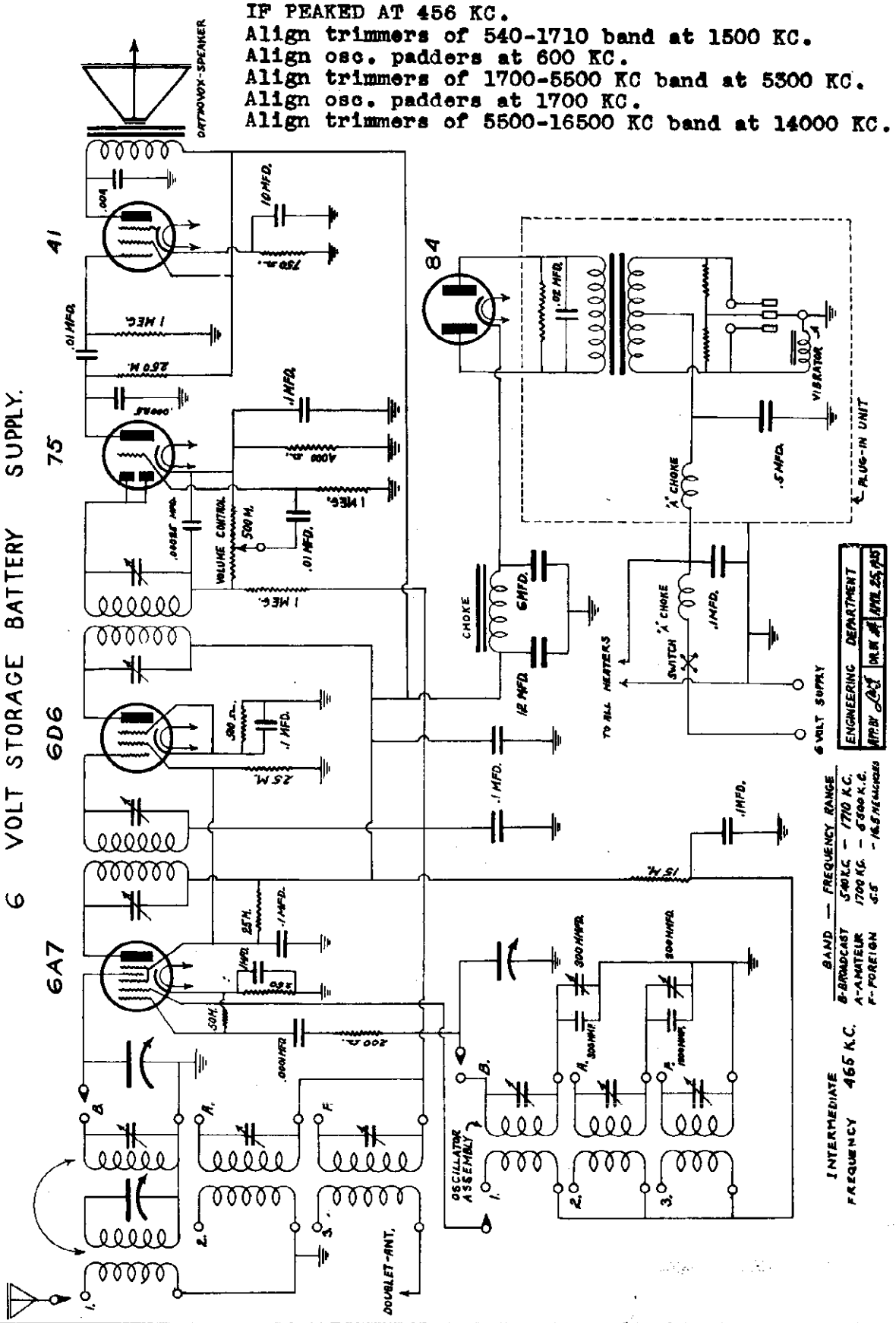

MODEL 61
Schematic
Alignment

PACIFIC RADIO CORP.

ALIGNMENT: -

IF PEAK FREQUENCY 456 KC
Align trimmers of 540-1600 KC band at 1500KC.
Align osc. padders at 580 KC.
Align trimmers of 1600-4000 KC band at 3000 KC.

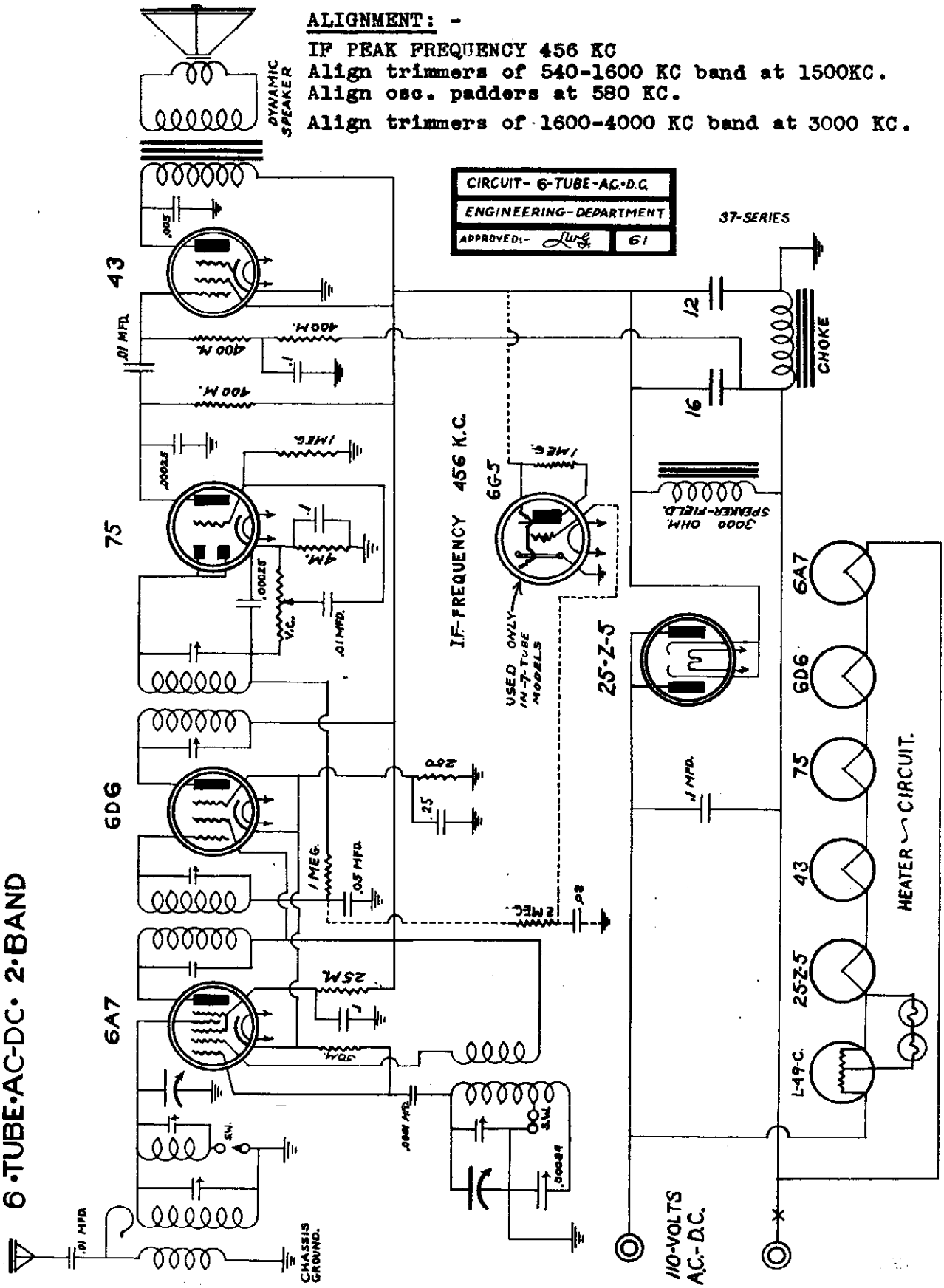

MODEL 81A
Schematic
Alignment

PACIFIC RADIO CORP.

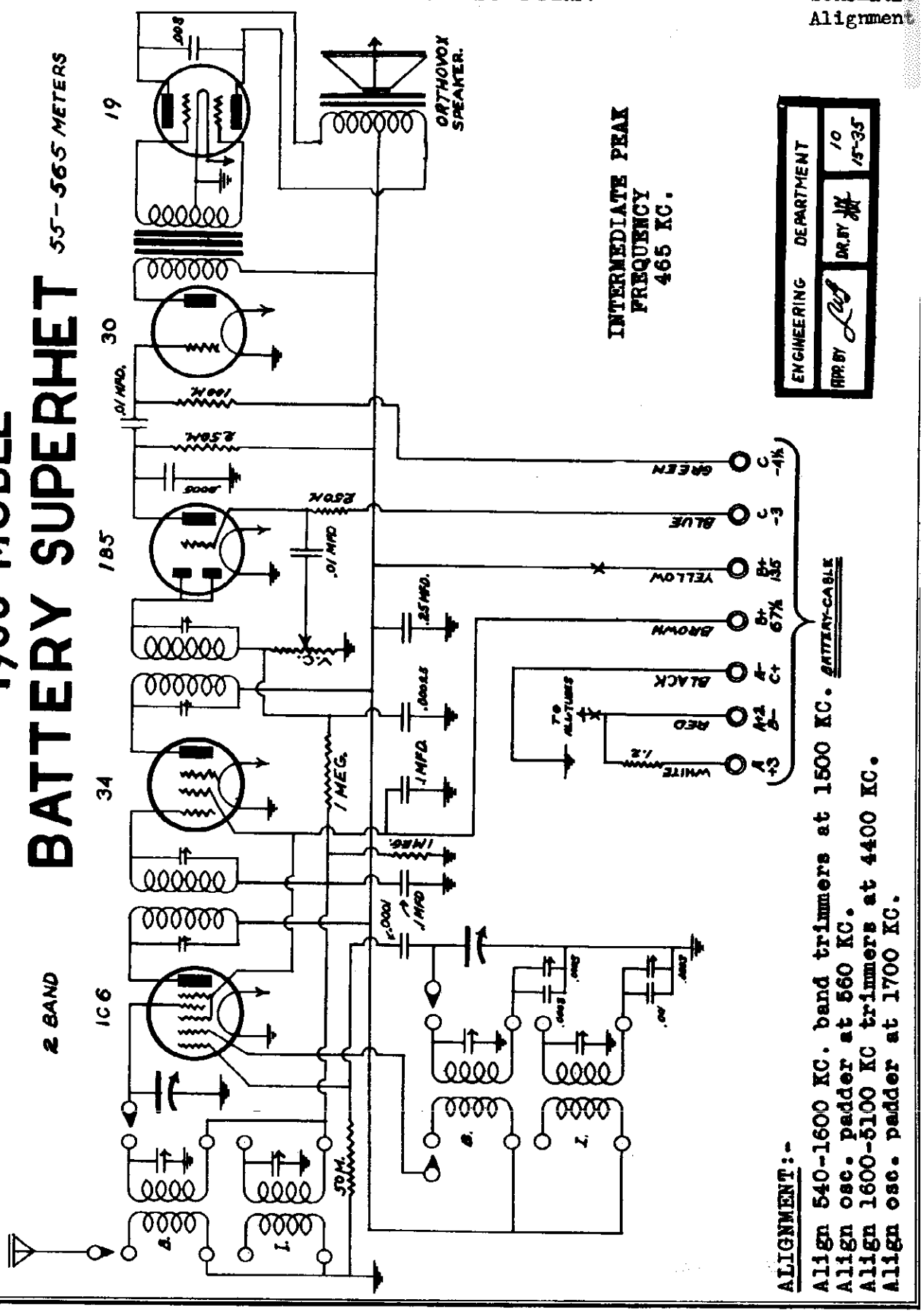

ALIGNMENT:-

Align 540-1600 KC. band trimmers at 1500 KC.
Align osc. padder at 560 KC.
Align 1600-5100 KC trimmers at 4400 KC.
Align osc. padder at 1700 KC.

©John F. Rider, Publisher

MODEL 682
Schematic
Alignment

PACIFIC RADIO CORP.

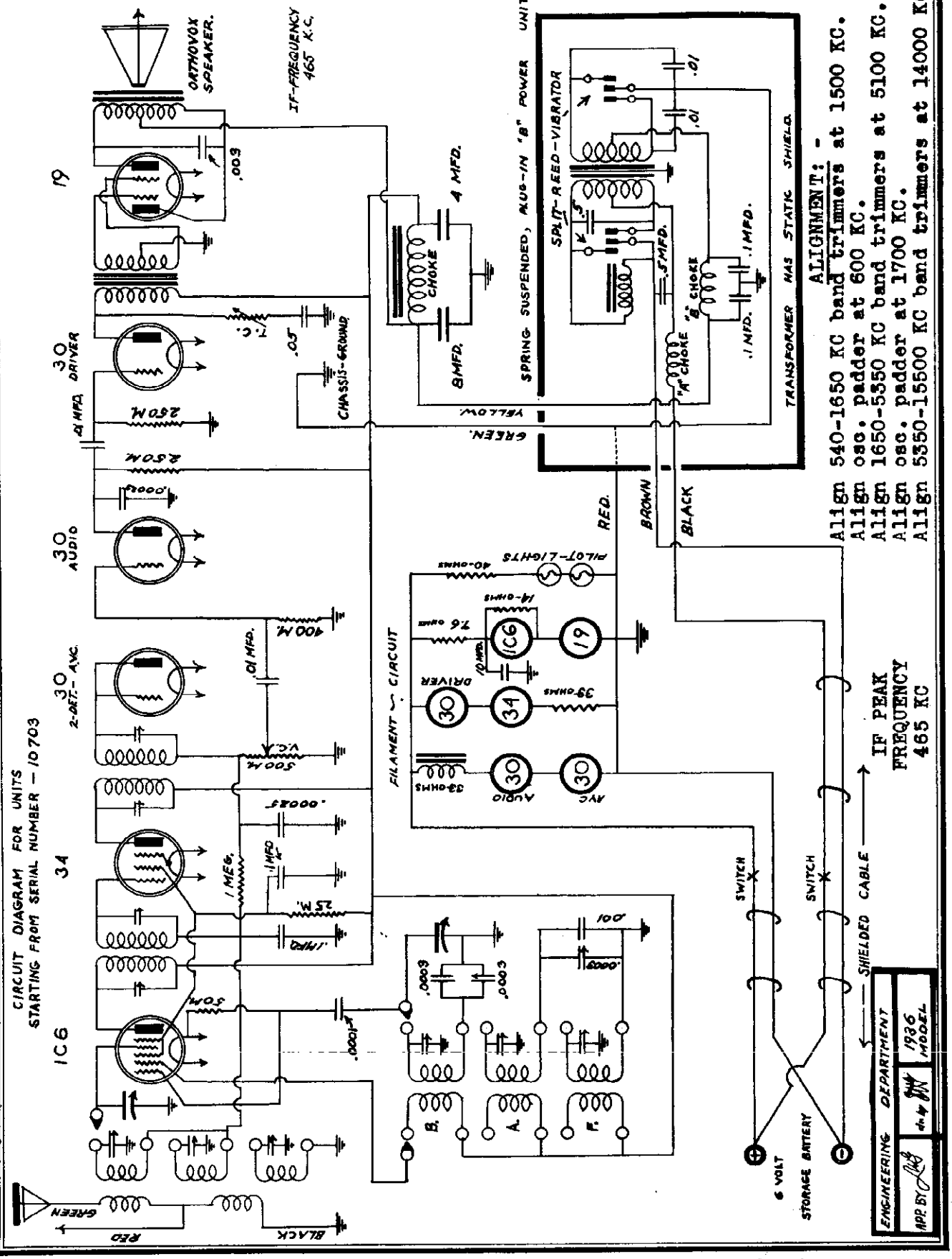

© John F. Rider, Publisher

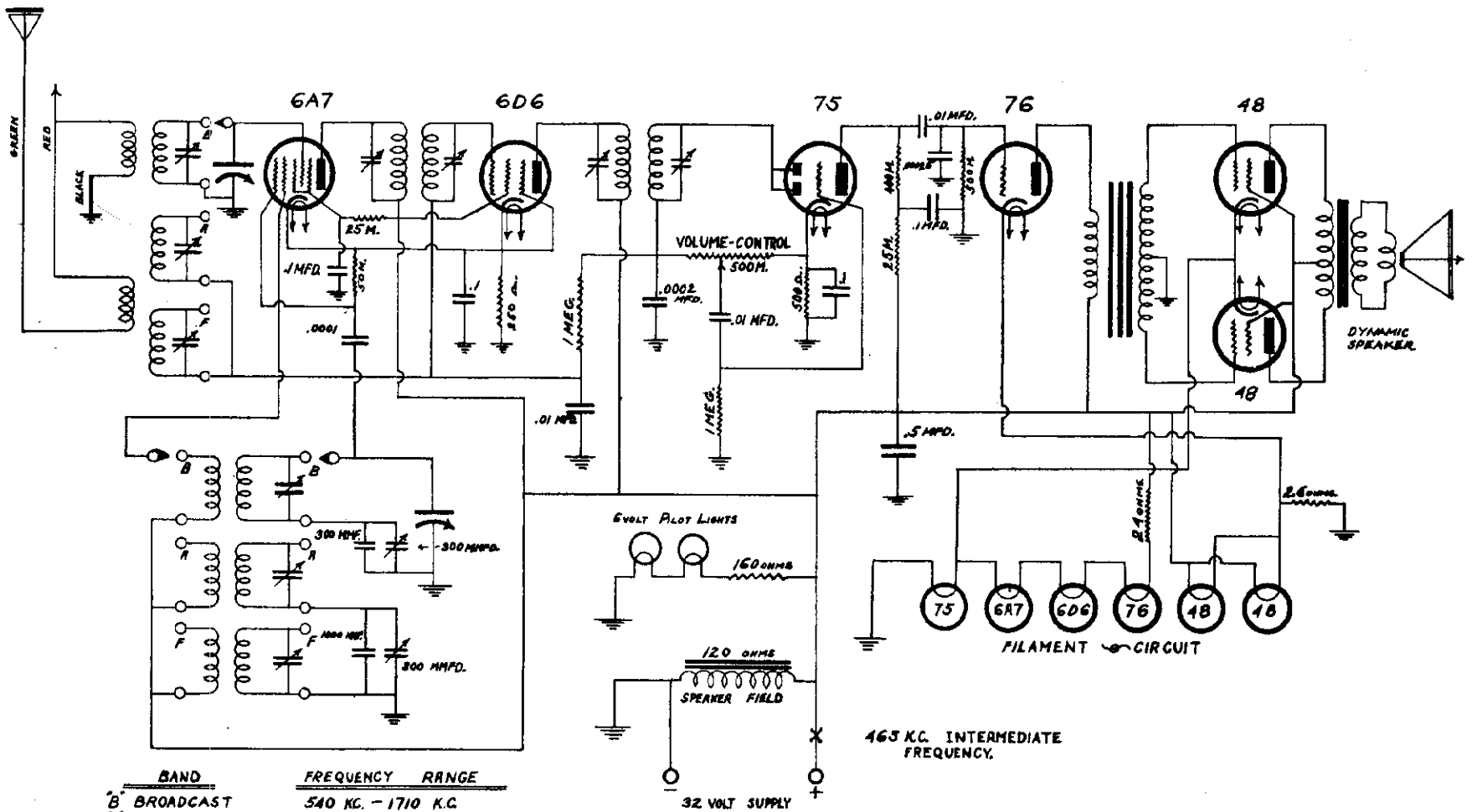

BAND	FREQUENCY RANGE
"B" BROADCAST	540 KC. – 1710 K.C.
"A" AMATEUR	1700 K.C. – 5500 K.C.
"F" FOREIGN	5.5 MEG. – 16.5 MEGACYCLES

ALIGNMENT: -

Align 540-1710 KC band trimmers at 1500 KC.
Align osc. padder at 600 KC.
Align 1700-5500 KC band trimmers at 5300 KC.
Align osc. padder at 1700 KC
Align 5500-16500 KC band trimmers at 14000 KC.

ENGINEERING DEPARTMENT		
Approved By [illegible]	[illegible]	1936 Model

PACIFIC RADIO CORP.

PACIFIC PAGE 7
MODEL 5200
Schematic
Alignment

MODEL 6320
Schematic
Alignment

PACIFIC RADIO CORP.

Align 540-1750 KC band trimmers at 1500 KC.
Align osc. padder 600 KC.
Align 1750-5800 KC trimmers at 5100 KC.
Align osc. padder at 1800 KC.
Align 5800-18000 KC. trimmers at 16000 KC.

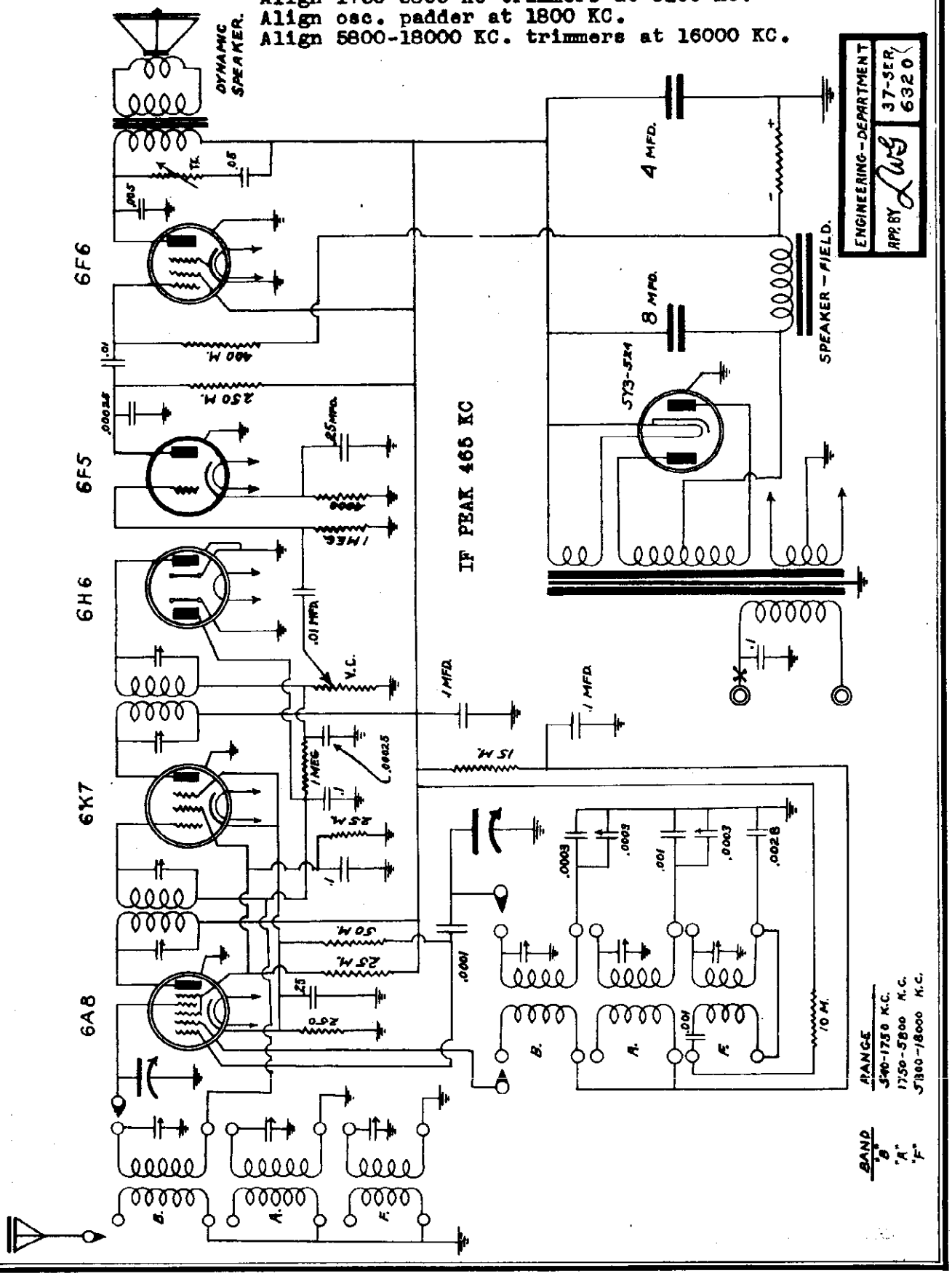

©John F. Rider, Publisher

MODEL 6322
Schematic
Alignment

PACIFIC RADIO CORP.

ALIGNMENT:-

Align 540-1750 KC trimmers at 1500 KC.
Align osc. padder at 600 KC.
Align 1750-5800 KC band trimmers at 5100 KC.
Align osc. padder at 1800 KC.
Align 5800-18000 KC trimmers at 16000 KC.

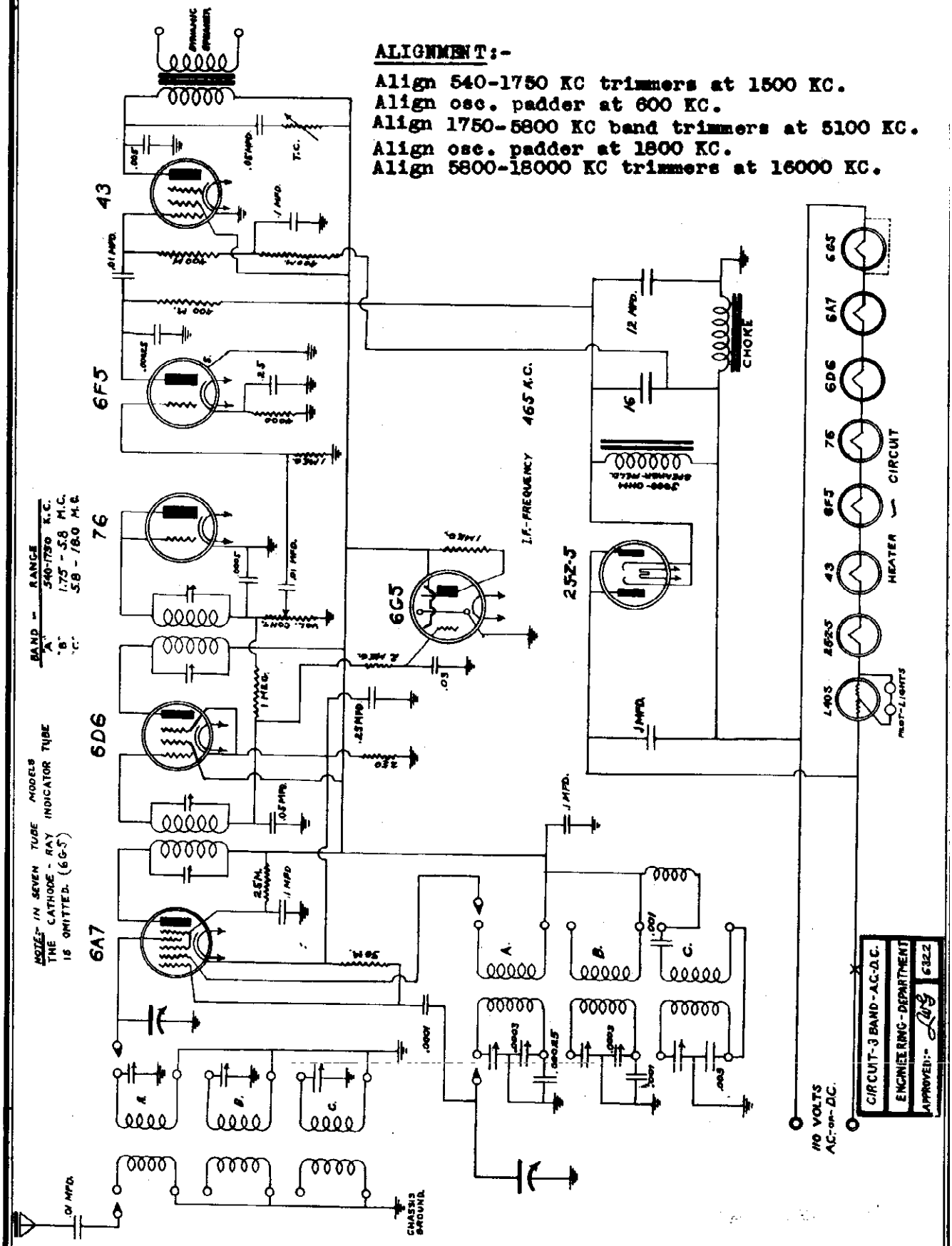

©John F. Rider, Publisher

MODEL 6370
Schematic
Alignment

PACIFIC RADIO CORP.

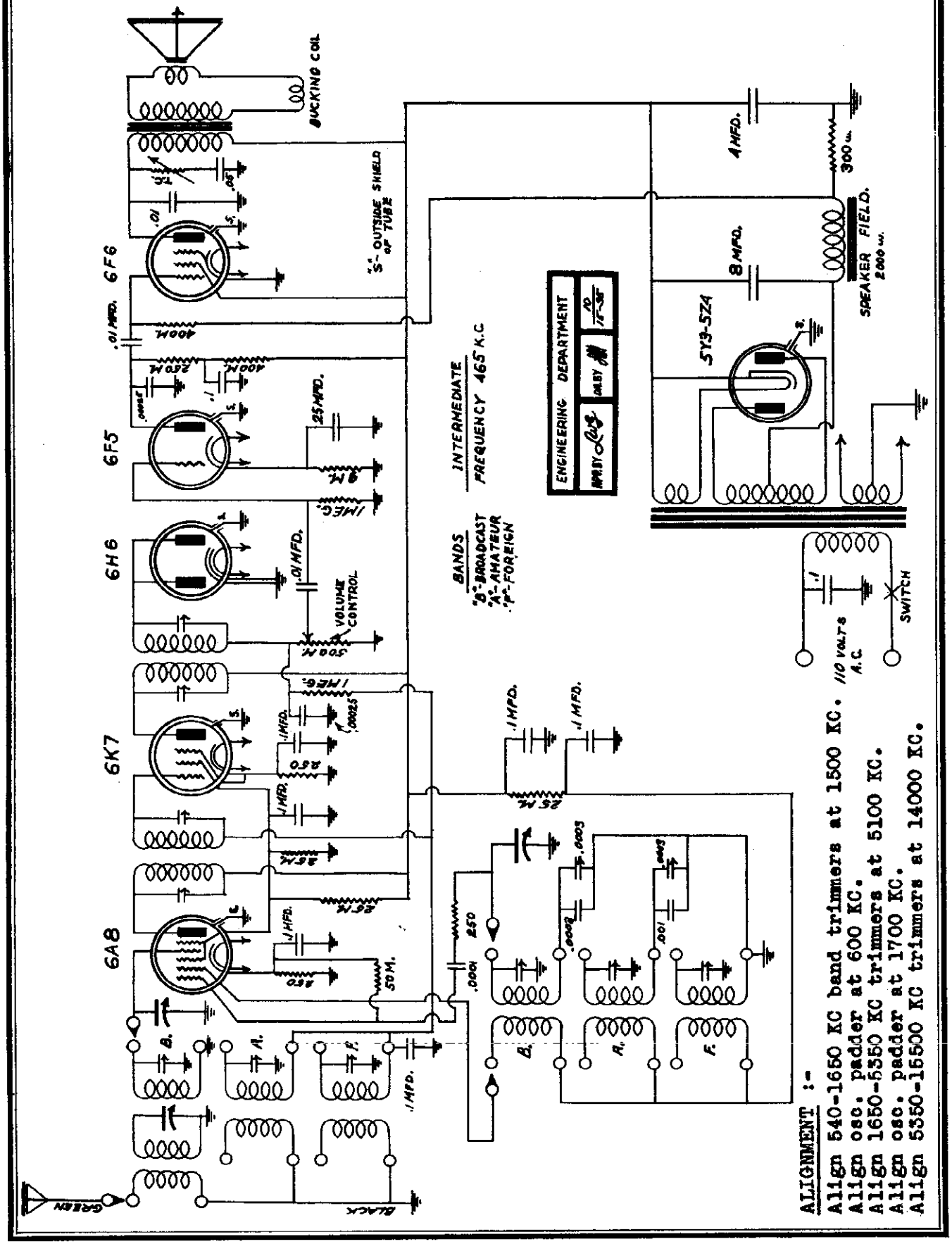

ALIGNMENT :-

Align 540-1650 KC band trimmers at 1500 KC.
Align osc. padder at 600 KC.
Align 1650-5350 KC trimmers at 5100 KC.
Align osc. padder at 1700 KC.
Align 5350-15500 KC trimmers at 14000 KC.

©John F. Rider, Publisher

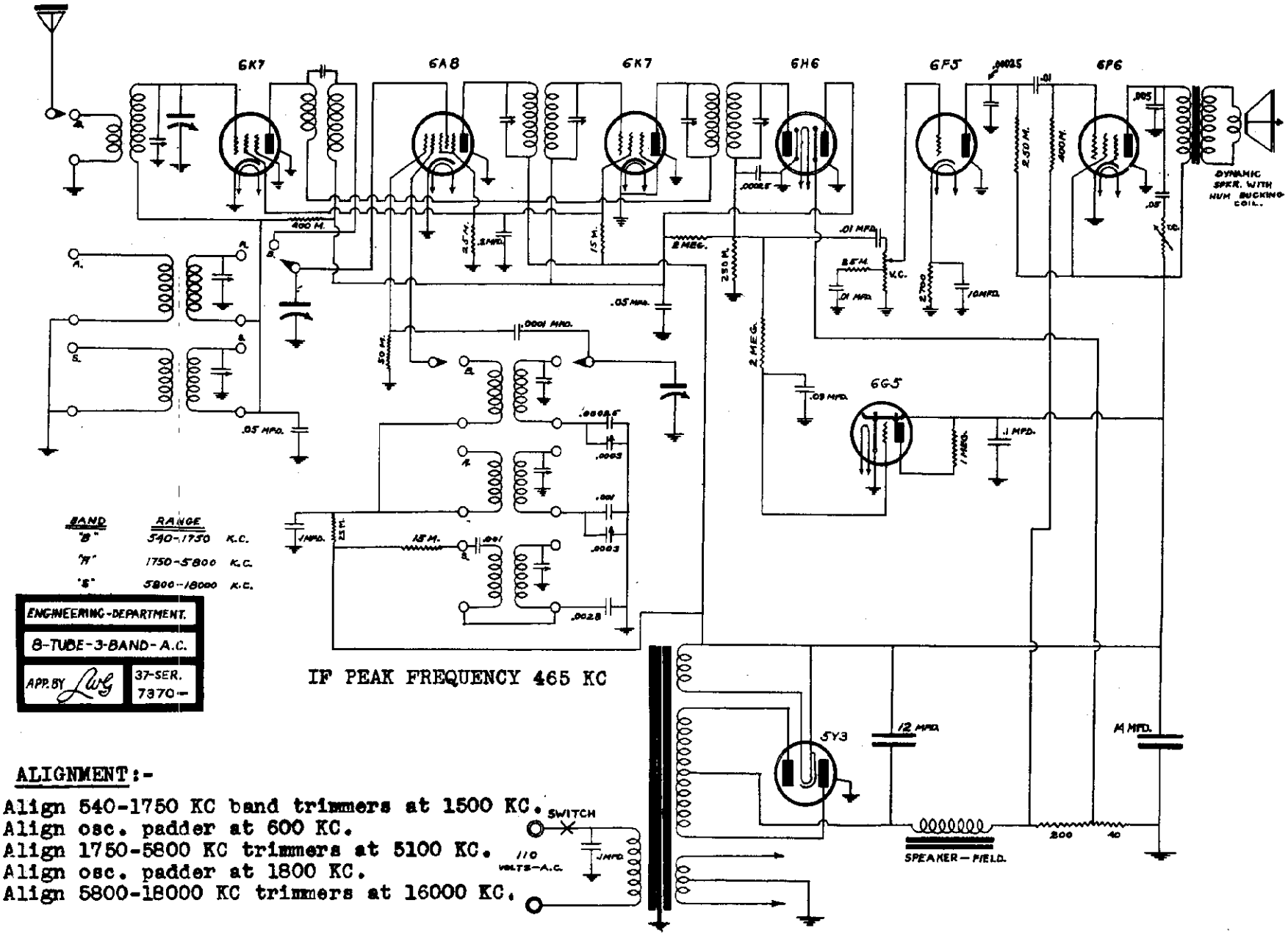

IF PEAK FREQUENCY 465 KC

ALIGNMENT:-

Align 540-1750 KC band trimmers at 1500 KC.
Align osc. padder at 600 KC.
Align 1750-5800 KC trimmers at 5100 KC.
Align osc. padder at 1800 KC.
Align 5800-18000 KC trimmers at 16000 KC.

PACIFIC RADIO CORP.

PACIFIC PAGE
MODEL 7370
Schema
Alignment

MODEL 14370
Schematic
Alignment

PACIFIC RADIO CORP.

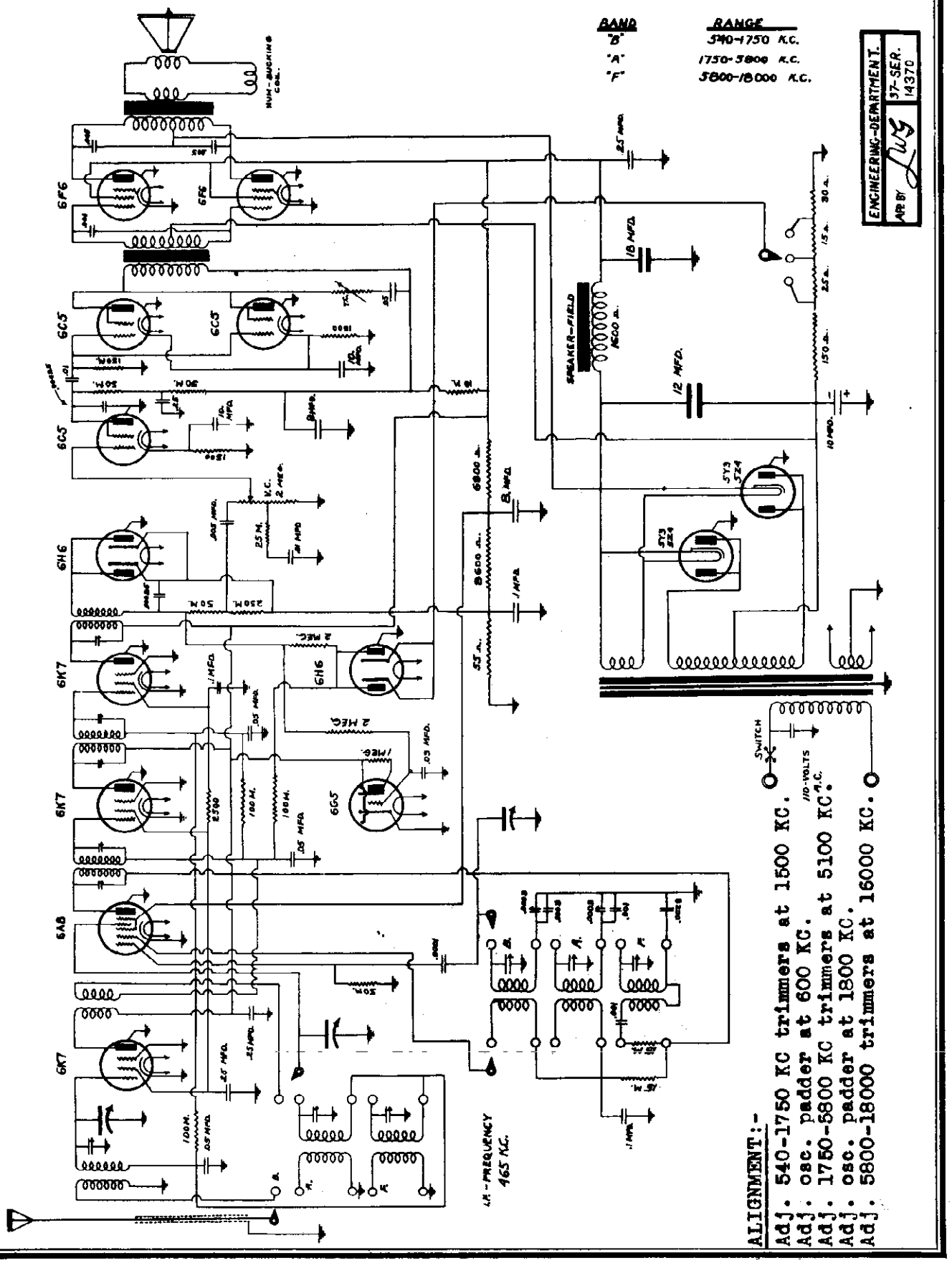

ALIGNMENT:-

Adj. 540-1750 KC trimmers at 1500 KC.
Adj. osc. padder at 600 KC.
Adj. 1750-5800 KC trimmers at 5100 KC.
Adj. osc. padder at 1800 KC.
Adj. 5800-18000 trimmers at 16000 KC.

PACKARD BELL CO.

MODEL 35, Late
MODEL 47M
Schematics
Socket

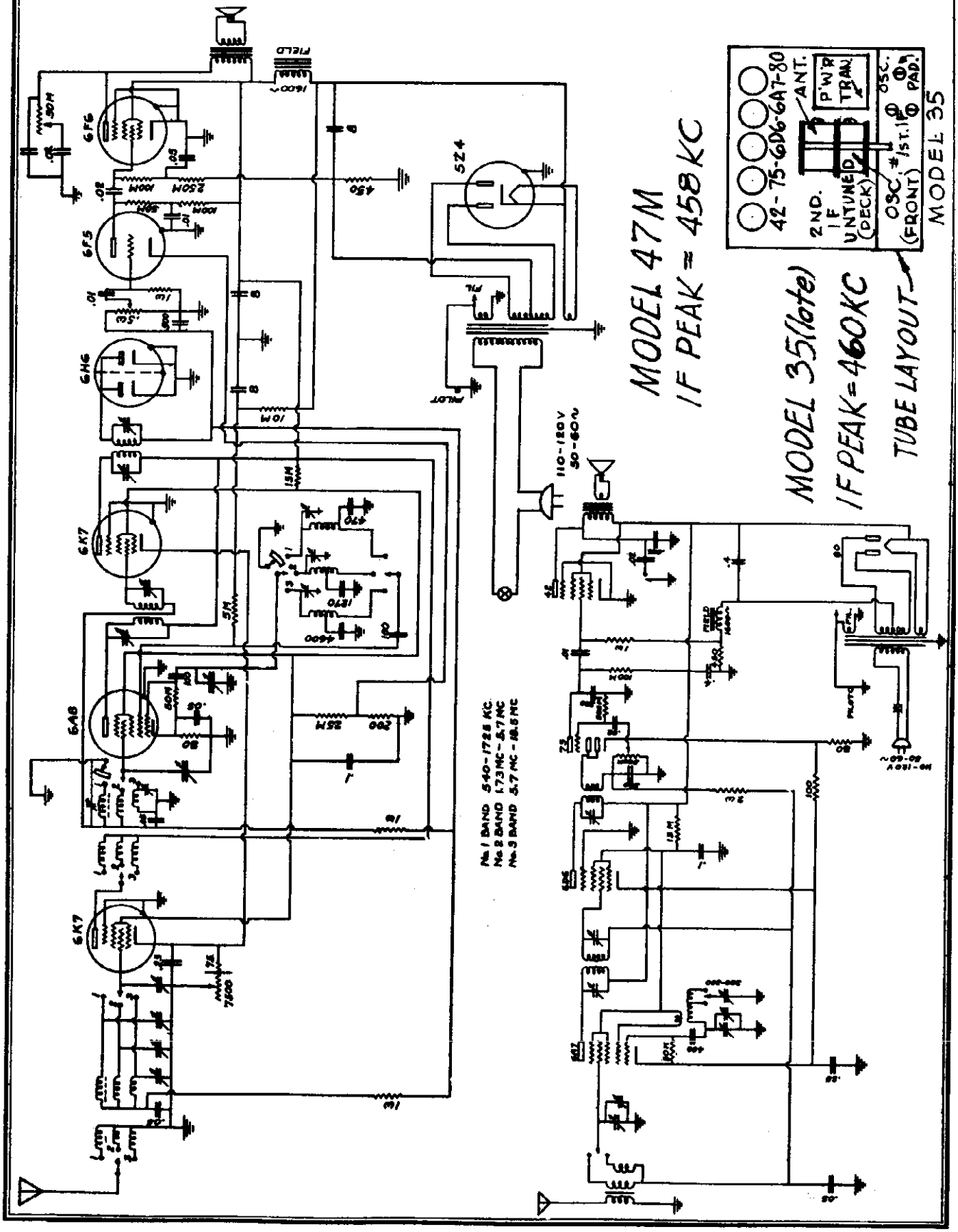

©John F. Rider, Publisher

MODEL 46
Schematic
Socket
Alignment

PACKARD BELL CO.

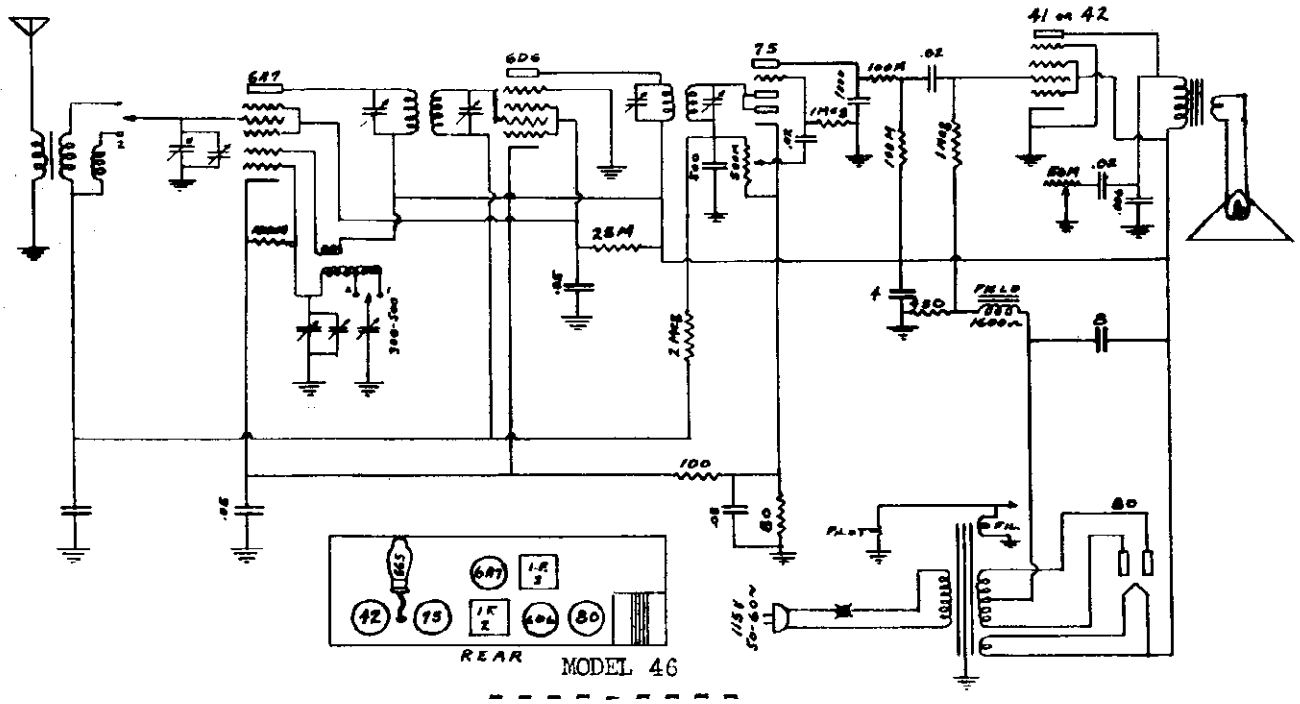

MODEL 46

Frequency Range
A - .54 to 1.7 mc.
B - 1.7 to 5.0 mc.

IF PEAK 460 KC.

ALIGNMENT DATA

AN ALL-WAVE TEST OSCILLATOR AND VACUUM-TUBE VOLTMETER TO MEASURE A.V.C. BIAS, WILL SUFFICE TO ASSIST IN SECURING NORMAL BALANCED CONDITION OF THE COILS AND CONDENSERS. AN OUTPUT OF APPROXIMATELY 500 MICRO-VOLTS WILL BE DESIRABLE TO PROVIDE GOOD V.T.V. READINGS OF THE A. V. C. BIAS. THE SENSITIVITY CONTROL SHOULD BE FULLY ADVANCED, AND IT ALSO WILL BE NECESSARY TO USE A .005 CONDENSER IN SERIES WITH THE TEST OSCILLATOR OUTPUT AND THE 6A8 CONTROL GRID. THE DIAL SHOULD BE SET TO APPROXIMATELY 1600 KC AND THE I.F. TRIMMERS ADJUSTED FOR MAXIMUM A.V.C. BIAS AT 458 KC.

ALL SERIES PADDER CONDENSERS ARE FIXED AND DIAL TRACKING AT THE LOW FREQUENCY END OF ALL WAVE BANDS MUST BE ACCOMPLISHED BY VARYING THE OSCILLATOR COIL INDUCTANCE. THE COILS ARE DESIGNED TO PERMIT THE NECESSARY AMOUNT OF VARIATION. HOWEVER, PARALLEL TRIMMER CONDENSERS ARE PROVIDED TO LINE UP THE HIGH FREQUENCY END OF EACH BAND.

THE DIAL POINTER SHOULD BE SET PARALLEL TO THE LINE OF THE DIAL WITH THE CONDENSER PLATES FULLY MESHED. WITH THE TEST OSCILLATOR ADJUSTED TO 1400 KC, THE OSCILLATOR TRIMMER SHOULD BE ADJUSTED FOR MAXIMUM OUTPUT WITH THE DIAL POINTER AT 1400 KC. NOW SET THE TEST OSCILLATOR AT 600 KC AND TUNE THE SET TO RECEIVE 600 KC SIGNAL. IF NECESSARY VARY THE COUPLING BETWEEN THE TWO PORTIONS OF THE OSCILLATOR COIL IN ORDER THAT THE DIAL MAY TRACK. AFTER LINING UP THE DIAL AT THE LOW FREQUENCY END THE HIGH FREQUENCY TRIMMERS MAY REQUIRE SLIGHT READJUSTMENT.

THE SAME PROCEDURE SHOULD BE FOLLOWED WITH THE NUMBER 2 BAND USING TWO MC. TO SET THE OSCILLATOR INDUCTANCE AND 5 MC TO ADJUST THE OSCILLATOR AND ANTENNA TRIMMERS, SIMILARLY ON THE NUMBER 3 BAND USING 6 MC AND 16 MC. A CAREFUL EXAMINATION OF THE WAVE BAND SWITCH WILL DIFFERENTIATE THE COILS USED FOR EACH BAND.

THE DISTRIBUTED CAPACITIES IN THE R.F. COILS AND ASSOCIATED WIRING IS HELD TO EXTREMELY CLOSE TOLERANCES AND OBVIATES THE NECESSITY FOR TRIMMERS ON THE NUMBER 1 AND NUMBER 2 BANDS FOR SAID COILS.

PACKARD BELL CO.

MODEL 48
Schematic
Socket

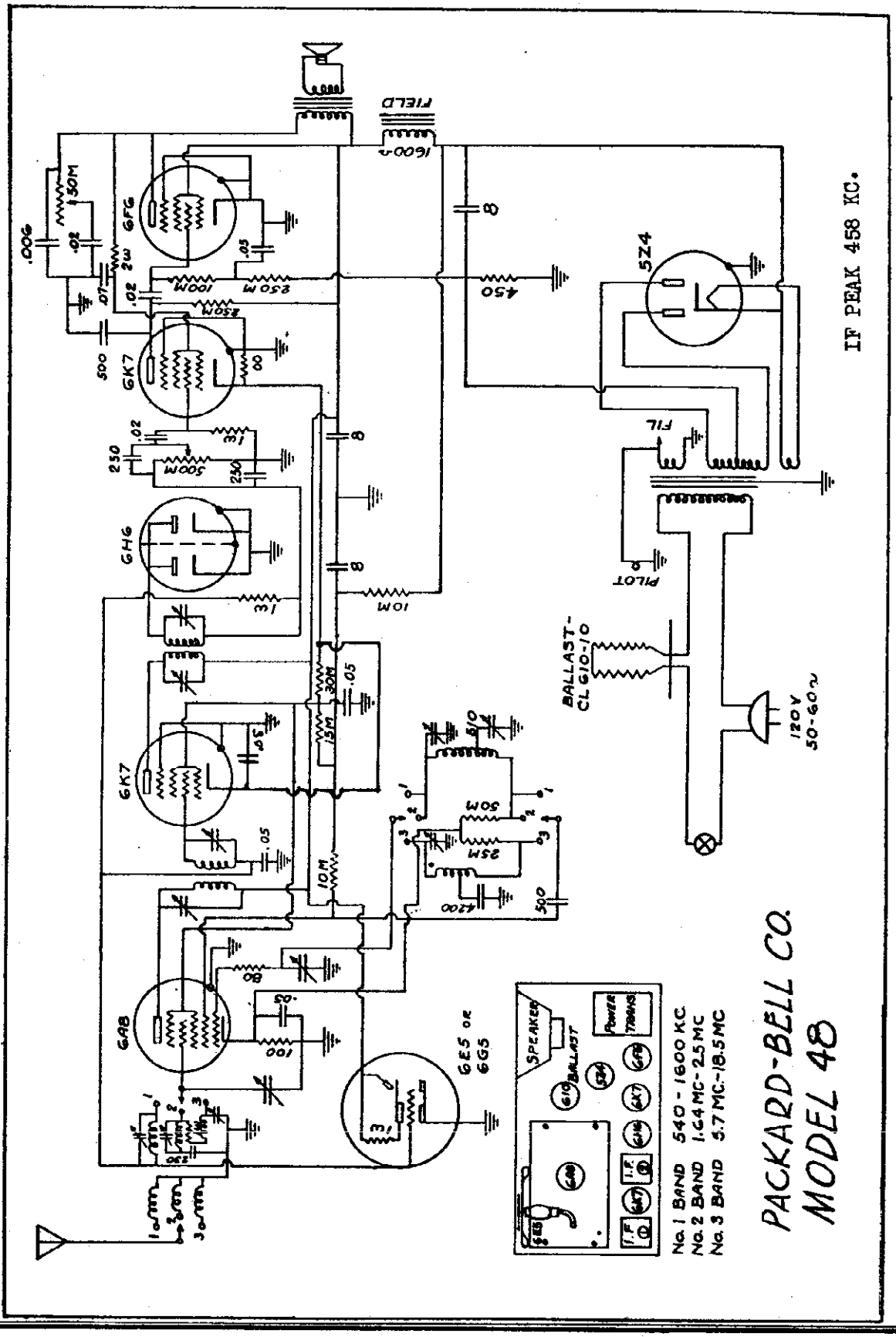

©John F. Rider, Publisher

MODEL 65
MODEL 67
Schematics
Socket,Notes

PACKARD BELL CO.

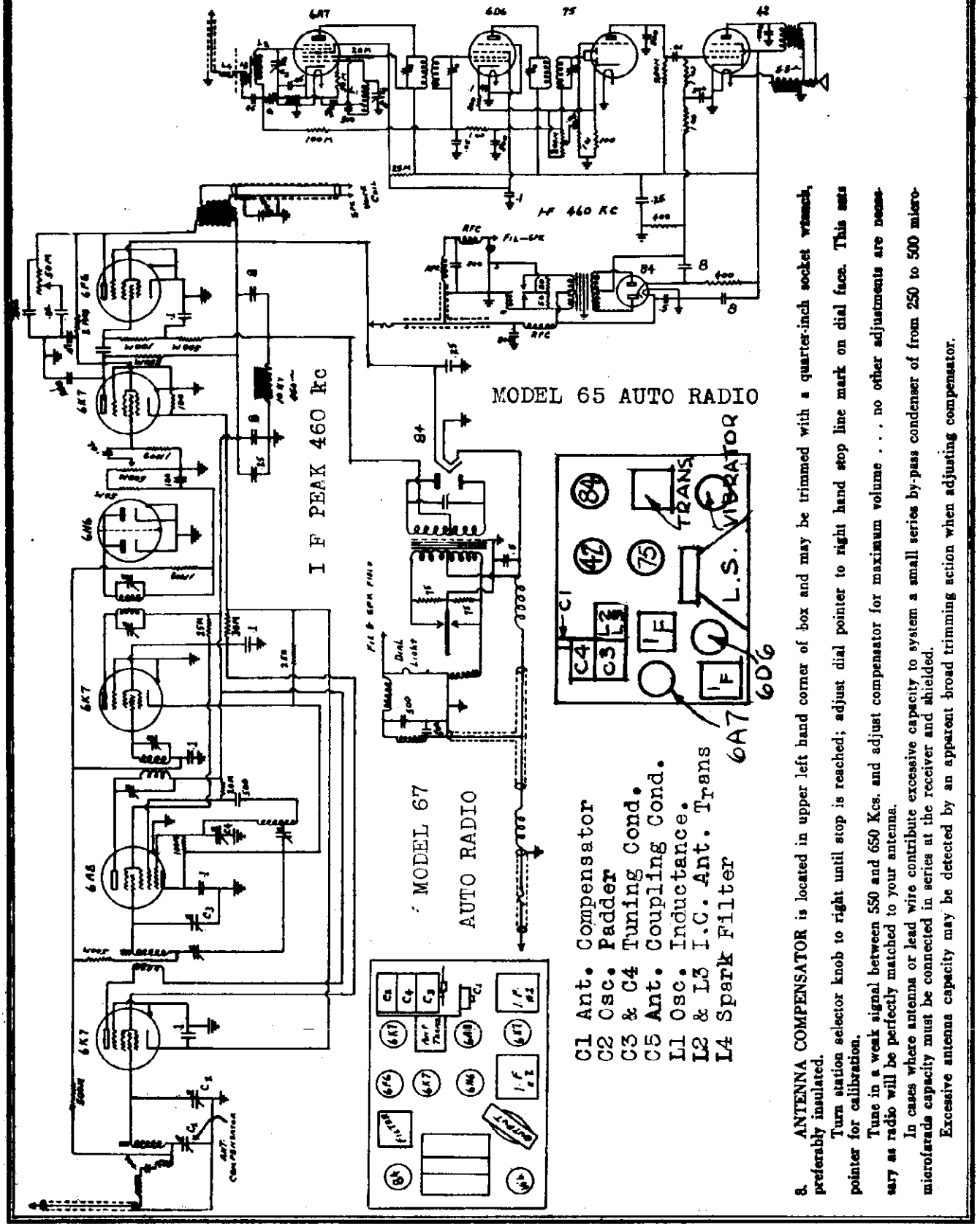

8. ANTENNA COMPENSATOR is located in upper left hand corner of box and may be trimmed with a quarter-inch socket wrench, preferably insulated.

Turn station selector knob to right until stop is reached; adjust dial pointer to right hand stop line mark on dial face. This sets pointer for calibration.

Tune in a weak signal between 550 and 650 Kcs. and adjust compensator for maximum volume . . . no other adjustments are necessary as radio will be perfectly matched to your antenna.

In cases where antenna or lead wire contribute excessive capacity to system a small series by-pass condenser of from 250 to 500 micromicrofarads capacity must be connected in series at the receiver and shielded.

Excessive antenna capacity may be detected by an apparent broad trimming action when adjusting compensator.

©John F. Rider, Publisher

PATTERSON RADIO CO.

MODEL PR-16
Series C
Schematic
Notes

C1 ..... 50 MMFD Trimmer
C2 ..... 300 MMFD Padder
C3 ..... .00001 Mica 10%
C4 ..... .0001 Mica 10%
C5 ..... .00025 Mica 10%
C6 ..... .001 Mica 3%
C7 ..... .0022 Mica 3%
C8 ..... .004 Mica 3%
C9 ..... .004 Mica 10%
C10 ..... .006—600 Volt
C11 ..... .02—600 Volt
C12 ..... .05—600 Volt
C13 ..... .1—200 Volt
C14 ..... .1—400 Volt
C15 ..... .25—400 Volt
C16 ..... .25—600 Volt
C17 ..... .5—200 Volt
C18 ..... 4 MFD—450 Volt
C19 ..... 8 MFD—450 Volt
C20 ..... 16 MFD—450 Volt
C21 3 Gang, 160-230 MMFD Tun. Cond
C22 ..... .10 MFD—25 Volt
J ..... Phone Jack
CH1 ..... OSC Filter Choke
CH2 ..... High Pass Audio Choke
V1 ..... R.F. Gain Control—25,000 OHM
V2 ..... Meter Adjustment—1,000 OHM
V3 ..... I.F. Gain Control—25,000 OHM
V4 ..... Volume Control—500,000 OHM
V5 ..... Tone Control—100,000 OHM
R ..... 8000 OHM Voltage Divider
R1 ..... 200 OHM ½ Watt
R2 ..... 300 OHM ½ Watt
R3 ..... 5,000 OHM ½ Watt
R4 ..... 10,000 OHM ½ Watt
R5 ..... 15,000 OHM ½ Watt
R6 ..... 15,500 OHM 1 Watt
R7 ..... 25,000 OHM ½ Watt
R8 ..... 50,000 OHM ½ Watt
R9 ..... 100,000 OHM ½ Watt
R10 ..... 100,000 OHM ½ Watt
R11 ..... 250,000 OHM ½ Watt
R12 ..... 300,000 OHM ½ Watt
R13 ..... 500,000 OHM ½ Watt
R14 ..... 2 MEG OHM ½ Watt
S1 ..... Band Change Switch
S2 ..... Short Out Section
S3 ..... Crystal—Series Parallel Switch
S4 ..... A.V.C. Short Out Switch
S5 ..... Beat Oscillator Switch
S6 ..... Communication Switch
S7 ..... A.C. Switch — on Volume Control
S8 ..... Connector Socket No. 1
S9 ..... Connector Socket No. 2
S10 ..... Speaker Socket
T1 ..... Audio Transformer
T2 ..... Power Transformer
T3 ..... Out-put Transformer
P1 ..... Connector Plug No. 1
P2 ..... Connector Plug No. 2
P6 ..... Speaker Plug
F ..... Field 1500 OHM

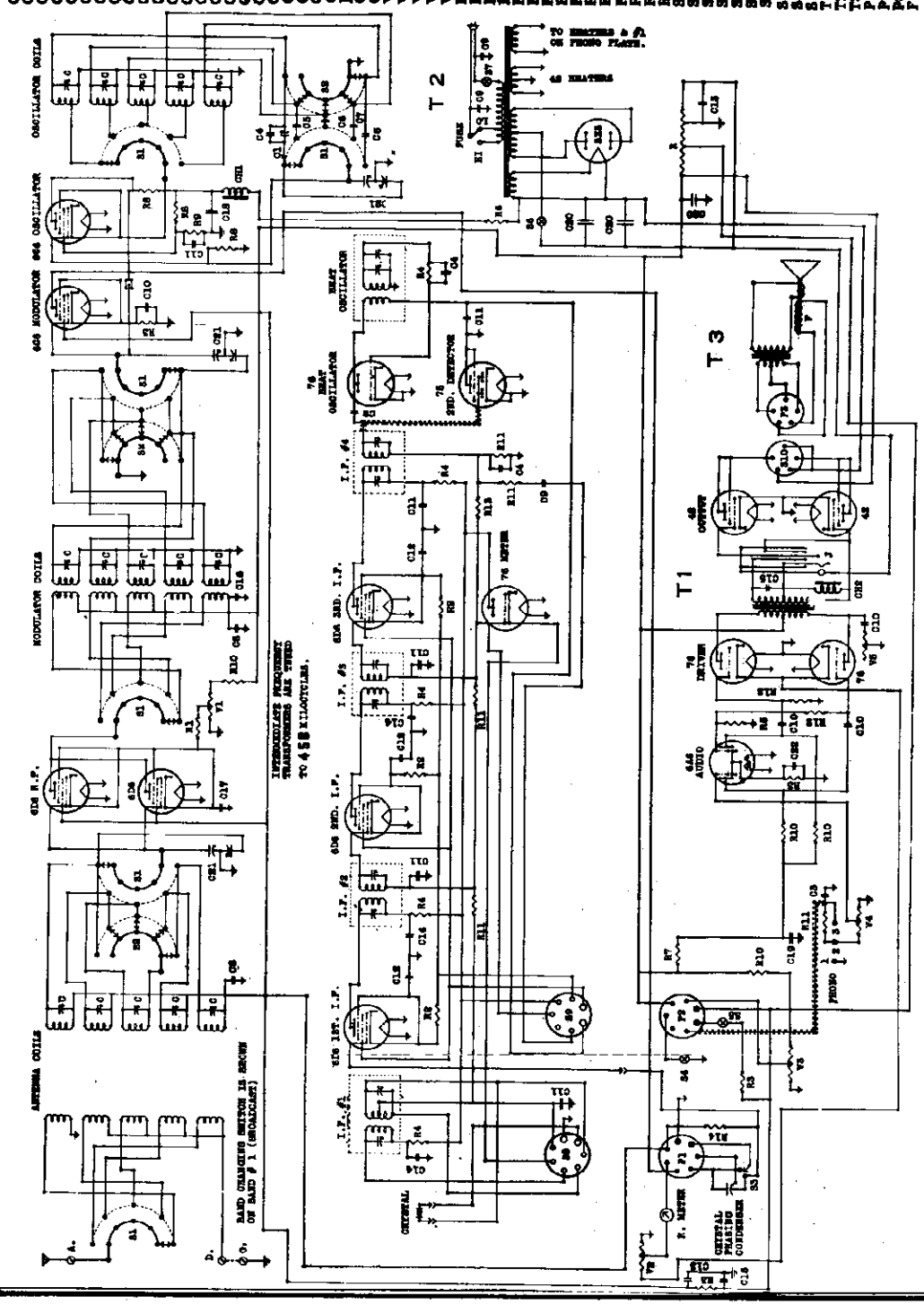

THE TUNING METER adjustment is located on the back panel just below the "Phono" Terminals. The adjustment may be made as directed above for Standard Broadcast or Phone Reception, and with automatic volume control in action. Now with dial, Band Switch and Volume Control set in any position turn Manual Control to extreme left, minimum position. Now adjust the screw marked "Tuning Set" on the back panel until the indicating vane on the Tuning Meter rests at the point on meter face marked "Set" at the extreme left of the scale. The Manual Control may now be increased toward the right for normal operation.

An auxiliary adjustment screw for the Beat Oscillator is located in the hole in the same shield can, directly back of the long adjustment handle. **THIS SHOULD NEVER BE TOUCHED unless it is impossible to get a beat note by adjusting the long handle. This adjustment screw will be found to be quite critical as compared to the long handle. UNDER NO CIRCUMSTANCES should the intermediate adjustment screws within the other square shield cans be touched! To do so will result in COMPLETE FAILURE** of the receiver to operate unless, of course, these adjustments are made by a competent service man who is thoroughly equipped to make such adjustments.

©John F. Rider. Publisher

MODEL PR-16
Series C
Socket, Trimmers
Notes

PATTERSON RADIO CO.

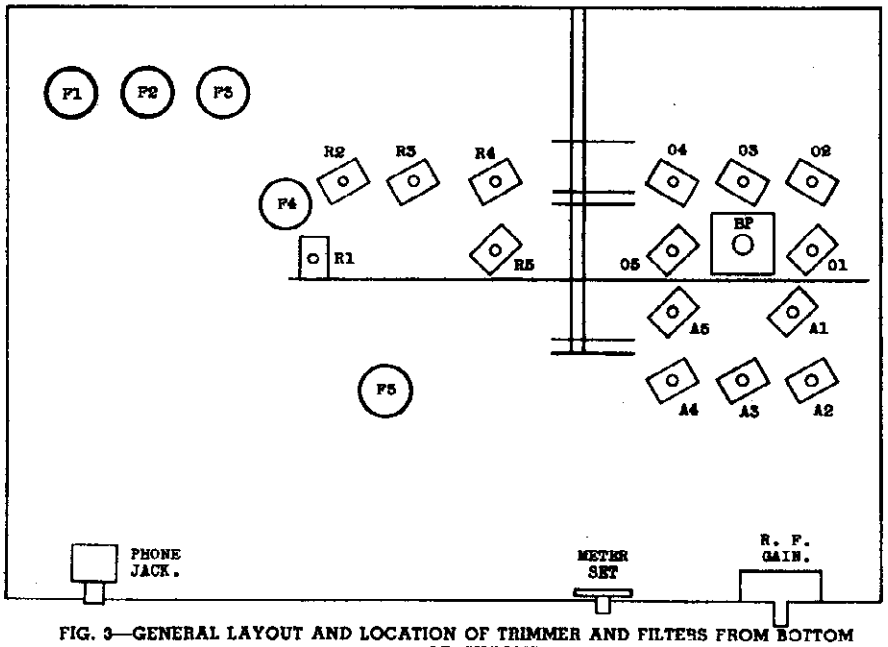

FIG. 3—GENERAL LAYOUT AND LOCATION OF TRIMMER AND FILTERS FROM BOTTOM OF CHASSIS.

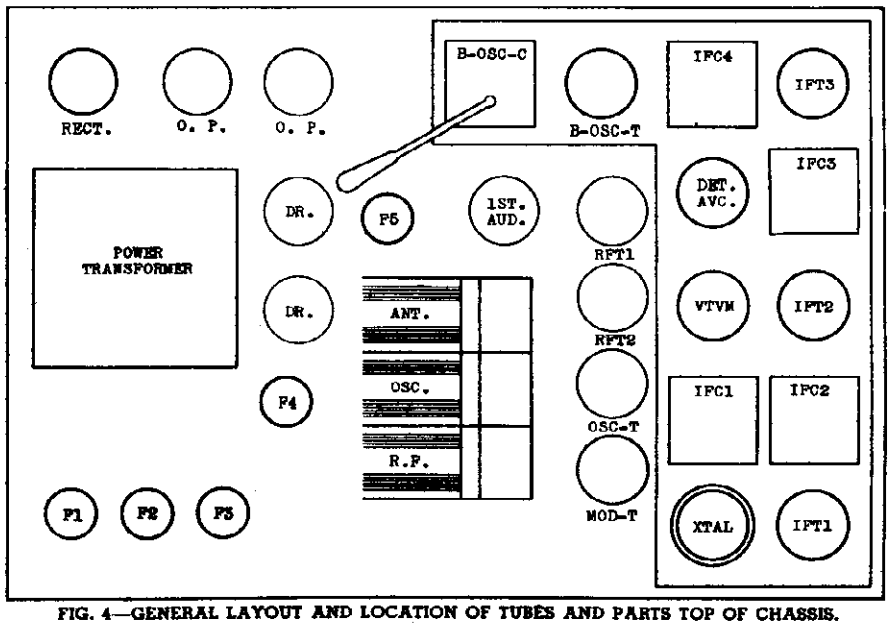

FIG. 4—GENERAL LAYOUT AND LOCATION OF TUBES AND PARTS TOP OF CHASSIS.

F1.....Filter No. 1—16 MFD
F2.....Filter No. 2—16 MFD
F3.....Filter No. 3—16 MFD
F4.....Filter No. 4— 8 MFD
F5.....Filter No. 5— 8 MFD
A.1.....B.C. Ant. Coil & Trimmer
A.2.....2 Band Ant. Coil & Trimmer
A.3.....3 Band Ant. Coil & Trimmer
A.4.....4 Band Ant. Coil & Trimmer
B.P.....B.C. Low-Freq. Padding Cond.
A.5.....5 Band Ant. Coil & Trimmer
R1.....B.C. R.F. Coil & Trimmer
R2.....2 Band R.F. Coil & Trimmer
R3.....3 Band R.F. Coil & Trimmer
R4.....4 Band R.F. Coil & Trimmer
R5.....5 Band R.F. Coil & Trimmer
01.....B.C. Osc. Coil & Trimmer
02.....2 Band Osc. Coil & Trimmer
03.....3 Band Osc. Coil & Trimmer
04.....4 Band Osc. Coil & Trimmer
05.....5 Band Osc. Coil & Trimmer
F1.....Filter No. 1
F2.....Filter No. 2
F3.....Filter No. 3
F4.....Filter No. 4
F5.....Filter No. 5
Rect.....Rectifier Tube 5Z3

O.P.—Output — Power-Tubes — 42 Push-Pull. Class—A.B.

DR.—Push-Pull-Driver Tubes—Type 76.

1st Aud. — 6A6-Phase-Inverter and 1st Stage Audio.

Det. A.V.C. — Detector and Automatic Volume Control Tube—Type 75.

V.T.V.M. — Vacuum-Tube-Voltmeter or "R" Meter-Control Tube—Type 76.

I.F.T. 3—Intermediate-Frequency Tube. Third Stage—Type 6D8.

I.F.T. 2—Intermediate-Frequency Tube. Second Stage—Type 6D6.

I.F.T. 1—Intermediate-Frequency Tube. First Stage—Type 6D6.

XTAL—Quartz-Filter. Crystal.

B-OSC.C.....Beat-Oscillator-Coil

B-OSC.T...Beat-Oscillator-Tube—Type 76

I.F.C.4...Intermediate Transformer No. 4

I.F.C.3...Intermediate Transformer No. 3

I.F.C.2...Intermediate Transformer No. 2

I..F.C.1...Intermediate Transformer No. 1

MOD.....Modulator-Tube—Type 6C6

OSC-T—Heterodyne - Oscillator - Tube—Type 6C8.

R.F.T.1 & R.F.T.2 — Parallel-Radio Frequency and Pre-selector Tubes—Type 6D6.

KEY TO CONTROLS

1—A. V. C. Switch
2—Manual Volume Control
3—Communication Switch
4—Volume Control and AC Switch
5—Tone Control
6—Station Selector, 2 Speeds
7—Wave Band Switch
8—Beat Oscillator Switch
9—Crystal Phasing Control
10—Crystal Filter Series Parallel Switch
12—360-degree Illuminated Band Spread
13—Camera Shutter, Illuminated Dial, 5 Bands
14—Illuminated Meter Showing the Carrier in R's

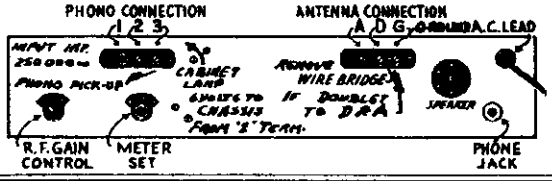

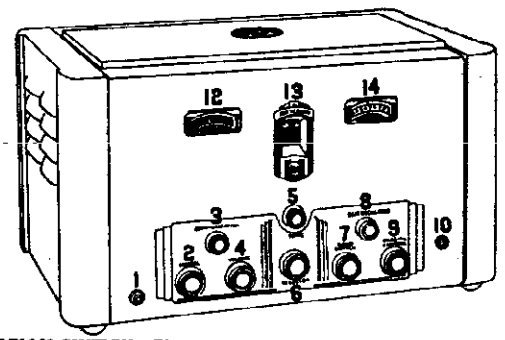

COMMUNICATION SWITCH—The use of the Communication Switch will be found to be of most value to amateurs. It permits the operator to "kill" the receiver while transmitting without allowing the filaments to cool down or altering the setting of the receiver.

PATTERSON RADIO CO.

MODEL PR-16
Series C
Alignment
Voltage

Alignment Procedure

CRYSTAL FILTER. During Broadcast or Phone reception the Crystal Filter is seldom of any value, if used in the series position. For most satisfactory results the Crystal Filter may be placed in parallel by throwing the right hand Toggle Switch down. When in this position it is seldom of any value for phone reception. To put the Crystal in series position it is necessary that the right hand Toggle Switch on front panel be in "Up" position, which is the normal receive position (Crystal not in use). Now turn front panel control marked "Crystal Phasing" toward the left; this control automatically puts the Crystal in the proper phase relationship for the series position. Crystal selectivity, maximum selectivity being reached about mid-point of the control range. It should be further noted that for either control Switch in parallel position the Phasing Control must be turned to mid set of the extreme right end of its range for satisfactory performance.

ALL VOLTAGES BELOW MEASURABLE WITH STANDARD A.C. VOLTMETERS

OUT-PUT TUBE FILAMENTS. Type 42
6.3 Volts A.C.—Center tap ground.
RECTIFIER FILAMENT. Type 5Z3
5 Volts A.C.
RECTIFIER PLATE. Type 5Z3
No. 1 to ground ..... 370 Volts A.C.
RECTIFIER PLATE. Type 5Z3
No. 2 to ground ..... 370 Volts A.C.
All other Filaments 6.3 Volts A.C., one side grounded

I.F. ALIGNMENT

As explained below the "R" meter will be found invaluable, and extremely flexible in all line-up procedure, making it unnecessary to use any other external resonance indicating device. On all sets equipped with crystal filters it is extremely important that the intermediate be aligned exactly to the crystal's fundamental frequency. If satisfactory crystal performance is to be accomplished. Few service men are equipped with a proper service oscillator designed for use with the crystal in the I.F. channel, the method of procedure described below will prove most practical, and if carefully followed, will prove most satisfactory.

Production crystals vary on much as 2 K.C. plus or minus 456 K.C., so it is inadvisable to attempt alignment by merely setting the service oscillator at 456 K.C., without making the final adjustment described below. The variation mentioned above, while less than 1%, is sufficient to cause very poor crystal performance unless great care is exercised, and all new sets are checked with a beat oscillator. Crystals may be checked with a service oscillator by merely tuning out all lines in the service oscillator dial except the 456 K.C. and with all controls on radio set for broadcast or phone reception, (crystal switch on right hand toggle-switch handle pointing up) A.V.C. in action (left hand toggle-switch handle pointing down). R.F. gain back of radio, communication switch in clockwise position, "on," beat oscillator switch in counter-clockwise position, "off," volume control about midpoint of its range (optional).

With service oscillator in operation at 456 K.C. remove the grid cap from the third I.F. tube and I.F. transformer positions indicated in Fig. 4), connect output lead from test oscillator to grid cap of this tube; if no signal is heard or if no reading is indicated the output attenuator or service oscillator should be increased until a reading is obtained on "R" meter. The trimmer screws on I.F. transformer No. 4 may now be adjusted for maximum reading on "R" meter. As they now be adjusted for maximum reading on "R" meter. As they now be adjusted for maximum reading on "R" meter within a readable range.

A standard bakelite or fibre screw driver should be used. After maximum setting of trimmer screws has been reached the grid cap may be replaced on third I.F. tube, and removing grid cap on second I.F. tube, connect service oscillator to the grid of this tube and continue as above, this time making adjustment of trimmer screws on I.F. transformer No. 3, continually reducing service oscillator attenuator when necessary to keep "R" meter within a readable range about "R" 6 or 7.

The same procedure may now be followed out on first I.F. tube, replacing grid cap on second I.F. tube and connecting service oscillator output lead to grid cap on first I.F. tube. Trimmer screws on I.F. transformer No. 2 should be adjusted for maximum reading on "R" meter as before, reducing service oscillator attenuator as necessary, in getting a low enough output from service oscillator to obtain a readable reading on "R" meter below "R" 7 or 8.

First make sure you have a good ground connection between service oscillator and radio chassis. The usual ground or shielding on output lead from service oscillator is usually sufficient) If the ground is good and meter still reads high, you may now reduce the manual control on radio counter-clockwise until "R" meter reads "R" 6 or 7. The trimmers on I.F. transformer No. 1 should be adjusted for maximum reading on "R" meter, reducing the manual control when necessary in line of service oscillator attenuator to obtain readable indication on "R" meter. When this is done you may now re-check adjustments on I.F. transformers No. 2, 3 and 4 as before. If any difficulties are experienced; otherwise, you may continue to reduce service oscillator attenuator as necessary.

The grid cap may now be replaced on first I.F. tube, and service oscillator output lead moved to grid of modulator tube, removing cap before making connection. Then adjust trimmers on I.F. transformer No. 1 for maximum reading on "R" meter as before, reducing service oscillator attenuator or manual control for readable indication on "R" meter. When this is done you may now re-check adjustments on I.F. transformers No. 2, 3 and 4 as before. If any difficulties are experienced, you may continue to reduce service oscillator attenuator as necessary.

If the radio is equipped with a beat oscillator, the above procedure should be followed closely.

If the selectivity and I.F. gain is good when set is first, before attempting the above instructions may be omitted, following only instructions given below.

Leave service oscillator connected to grid of modulator tube in the manner described above. Set service oscillator output attenuator set for quite low output and, if necessary, manual control reduced; "R" meter reading about "R" 6 or 7.

Next turn phasing control toward counter-clockwise position to about midpoint of its tuning range (crystal toggle switch handle up). Now very slowly and carefully tune the service oscillator through resonance until the maximum point is found as indicated on maximum reading on "R" meter. This point will be very sharp, and extreme care must be used to tune the service oscillator exactly to resonance. Carefully rock the tuning control back and forth through this point to be sure you have found the exact point, and keep it there. This should be checked several times during the following procedure.

Now start on No. 4 I.F. transformer and carefully tune trimmers for maximum peak on "R" meter and proceed up to No. 1 checking, and if I.F. trimmers, except trimmers on No. 1 I.F. transformer, does not require any change, the alignment is complete. The trimmers on No. 1 should never be touched while the crystal is in series position, as indicated above. When the maximum peak has been reached the phasing control may be returned to its original entrance clockwise position, (crystal toggle switch handle up), and without touching the service oscillator tuning, the trimmers on No. 1 I.F. transformer may now be re-set for maximum peak on "R" meter reading.

The above procedure should be followed with the right hand toggle switch down, (parallel position) and using the radio through a broadcast station, or un-modulated signal from service oscillator set somewhere in the broadcast band; as the radio is tuned through exact resonance, a sharp dip in the "R" meter reading will be noticed, or it should be tuned for maximum peak on the exact center of resonance peak.

It is also necessary at any time to remove the crystal from its holder for inspection, do not handle the crystal or its associate mounting plates any more than absolutely necessary. Wash all parts thoroughly with alcohol before replacing in holder, using care not to handle parts with your bare hands after they are washed.

BROADCAST AND SHORT-WAVE ALIGNMENT

Make sure that adjustments are necessary before proceeding. Before attempting further alignment the diagram in Fig. 3 should be studied, particularly in reference to trimmer and padder, or locations and functions.

It is highly improbable that any adjustments will be necessary other than a slight touch-up of the various oscillator coil trimmers and broadcast padding condenser, and possibly a check on all other trimmers for alignment, although this latter is usually unnecessary with very little reduction in effect on toll R.F. coils, so that a large change in the mechanical setting would have to take place before any noticeable capacity change or impaired performance could result, particularly as since all trimmer adjustments are sealed at the factory.

The broadcast band can be easily checked for calibration by tuning in stations of known frequency at various points on the dial, and corrections can be made without use of service oscillator, if desired, by using "R" meter to indicate exact peak, reducing manual control, I.F. gain where necessary to obtain a readable indication on the "R" meter. The short-wave bands may be checked with main tuning dial set to a frequency near 1400 K.C. where a local station of known frequency should appear, being sure first that the desired station is in operation at the time. Turn trimmer screw 01 very slowly and carefully, until the desired station is tuned to exact peak, as indicated by maximum reading of "R" meter.

Now set tuning dial to a frequency near 600 K.C., where a local station of known frequency is in operation. If the desired station appears at the proper setting no further adjustment will be necessary, if not, adjust padder screw "02" until station is tuned in at proper setting. Rock tuning dial back and forth through point of resonance to be sure you have found exact point. Next tune broadcast dial near 3 M.C. and tune back and forth until the 3rd harmonic of service oscillator is found; it should appear exactly on the 3 M.C. point. If it does not, it may be brought into place by carefully adjusting trimmer condenser "02." The signal from the service oscillator is very strong at this point, a second peak slightly higher in frequency may also be found, but it will be much weaker than the lower frequency peak on the 3 M.C. point on dial. The second peak is the image of the fundamental and should be disregarded. This image is the result of the harmonic and should be checked with the image chart in the service section. It may now be checked all across, a harmonic from the service oscillator appearing on 7 M.C., 6 M.C., 5 M.C., 4 M.C.

If this is not the case, an error has been made in adjusting trimmer "02," and should be checked again until a harmonic falls on each successive 1 M.C. point on tuning dial.

However, some of the points may be weaker than others, particularly the odd harmonics. This is perfectly normal and should cause no concern.

It would be well at this point to replace antenna on radio, set band switch to broadcast at 1000 K.C. and check again for zero beat with station at this frequency before continuing to No. 4 band (short-wave). Make sure that the crystal switch is in the "off" position (all-the-way counter-clockwise) and tune set to zero beat with station at 1000 K.C. Now set tuning dial near 3 M.C. and tune back and forth until the 3rd harmonic of service oscillator is found; it should appear exactly on the 3 M.C. point; if it does not, it may be brought into place by carefully adjusting trimmer condenser "02." The rest of the band will then be automatically in calibration.

Next change the band switch to No. 3 short-wave band, and set the dial at 7 M.C. and tune the oscillator trimmer screw "03" until harmonic of service oscillator is located. It should appear exactly on the 7 M. C. point; if it does not, it may be brought into place by careful adjustment of trimmer screw "03." If the signal from the service oscillator is very strong at this point, a second peak slightly higher in frequency may also be found, but it will be much weaker than the lower frequency peak on the 7 M.C. point on dial. The second peak is the image of the fundamental and should be disregarded. This image is the result of the harmonic and should be checked with the image chart in the service section. It may now be checked all across, a harmonic from the service oscillator appearing on 7 M.C., 6 M.C., 5 M.C., 4 M.C.

The band change switch should now be changed to No. 2 short-wave band. Next set tuning dial near 3 M.C. and tune back and forth until the 3rd harmonic of service oscillator is found; it should appear exactly on the 3 M.C. point. If it does not it may be brought into place by carefully adjusting trimmer condenser "02." The rest of the band will then be automatically in calibration.

Next change the band switch to No. 1 short-wave band, and set the dial at 14 M.C. and tune the oscillator trimmer screw "04" until harmonic of service oscillator is located. It should appear exactly on the 14 M. C. point; if it does not, it may be brought into place by careful adjustment of trimmer screw "04." If the signal from the service oscillator is very strong at this point, a second peak slightly higher in frequency may also be found, but it will be much weaker than the lower frequency peak on the 14 M.C. point on dial. The second peak is the image of the fundamental and should be disregarded. This image is the result of the harmonic and should be checked with the image chart in the service section. It may now be checked all across, a harmonic from the service oscillator appearing on 14 M.C., 13 M.C., 12 M.C., 11 M.C., 10 M.C., 9 M.C., 8 M.C. As in the case of the No. 3 band, adjustments at 14 M.C. the image being weaker and higher in frequency than the desired fundamental.

In checking the 5th band the procedure should be changed somewhat as the harmonics come so very close together on this band that it is impossible to identify them readily. The oscillator may be made on this band by the present method to determine if adjustment is necessary. If 2 harmonic from service oscillator appears on each M.C. point throughout its range, no further adjustment is necessary.

Now change service oscillator to 7 M.C. band and true to 7 M.C. position; leaving radio dial set at 7 M.C. as described above, turn the service oscillator slowly past 7 M.C., watching "R" meter and tuning for maximum peak. When peak has been accurately reached, the service oscillator should be left at that setting and radio band switch changed to No. 4 band, and set for zero beat with station near 28 M.C. and tune for the harmonic of this station from the oscillator. When it has been located, it should appear on 28 M.C. If it does not it may be brought into place by very careful adjustment of trimmer screw "05", taking care to avoid the higher frequency image as in the case of No. 3 and No. 4 band.

When this adjustment has been made properly, set the main tuning dial to 21 M.C. A service oscillator harmonic will also appear on this point.

A further check may now be made on No. 4 band if desired by changing radio band switch to No. 4 band and tuning the radio dial to 14 M.C., where the 7 M.C. service oscillator second harmonic should be found. If it does not appear, it is probable that an error has been made in the original adjustment. Trimmer screw "01" may be adjusted again to bring this point into line at 14 M.C. and the original adjustment repeated. Care must be taken not to make any adjustments in this region when set at 1000 K.C., will prove the most practical method.

AVERAGE VOLTAGE CONDITIONS THROUGHOUT IN A NORMAL SET

All voltages below measurable under the following conditions: Set all controls for normal broadcast reception (as indicated on page 2 under the heading "Operation"), antenna must be removed, Band switch on B.C. Band (no signal being received), volume control (audio) set at minimum.

All D.C. Voltage measured with standard 1000 ohm per volt, VOLT meter from point indicated to chassis (ground).

Fuse on 110 V Tap	Line Voltage, 110 V	50-60 Cycles
Fuse on 120 V Tap	Line Voltage, 120 V	50-60 Cycles
Fuse on 220 V Tap	Line Voltage, 220 V	50-60 Cycles
Fuse on 240 V Tap	Line Voltage, 240 V	50-60 Cycles

R.F. TUBES. 1 and 2, Type 6D6
Grid 0 Volts — Plates 250 Volts+ — Screens 100 Volts+
Suppressors and Cathodes
1 Volt+ ..... R. F. Gain Control, maximum position
38 Volts+ ..... R. F. Gain Control, minimum position*

HETERODYNE OSC. TUBE. Type 6C6
Grid 0 Volts — Plate 75 Volts+ — Screen 130 Volts+
Suppressor and Cathode
0 Volts

MODULATOR TUBE. Type 6C6
Grid 0 Volts — Plate 230 Volts+ — Screen 100 Volts+
Suppressor and Cathode
3 Volts+

I.F. TUBES. 1, 2 and 3, Type 6D6
Grids 0 Volts — Plates 180 Volts+ — Screens 115 Volts+
Suppressors and Cathodes
1 Volt+ ..... Manual Control, maximum position
30 Volts+ ..... Manual Control, minimum position*

BEAT OSCILLATOR TUBE. Type 76*
Grid 0 Volts — Plate 70 Volts+ — Cathode 0 Volts

V.T.V.M. METER CONTROL TUBE. Type 76
Grid 0 Volts — Plate 250 Volts+ — Cathode 8 Volts+ (Approx.)

1st AUDIO and PHASE INVERTER TUBE. Type 6A6
Grids 1 & 2, 0 Volts; Plates 1 & 2, 150 Volts+; Cathode 4 Volts+

A.V.C. and DETECTOR TUBE. Type 75
Grid 0 Volts — Plate 0 Volts — Cathode 0 Volts — Diodes 0 Volts

DRIVER TUBES. 1 and 2, Type 76, Push-Pull
Grids 0 Volts — Plates 250 Volts+ — Cathodes 12 Volts+

OUT-PUT POWER TUBES. 1 and 2, Type 42, Push-Pull, Class A.B. Triodes
Grids 45 Volts — Plates 380 Volts+ — Cathodes 0 Volts
Screen tied to plate.

***Whenever a minimum control measurement is made, the control should be returned to maximum position before proceeding to other measurements.**

***Beat oscillator switch on front panel must be turned on before these measurements can be made. It should be turned off again before proceeding to other measurements.**

ELECTROLYTICS—FILTER—CONDENSERS
(Positions in chassis indicated in Fig. 3)

F1—16 MFD—
Can insulated from chassis.
Center to ground ..... 380 Volts+
Can to ground ..... 45 Volts
F2—16 MFD—
Can grounded.
Center to ground ..... 250 Volts+
F3—16 MFD—
Can insulated from chassis.
Center to ground ..... 380 Volts+
Can to ground ..... 45 Volts
F4—8 MFD—
Can grounded.
Center to ground ..... 250 Volts+
F5—8 MFD—
Can grounded.
Center to ground ..... 220 Volts+
SPEAKER-FIELD—
Rectifier filament, side to ground ..... 380 Volts+
Set, side to ground ..... 250 Volts+

PR-16 FIVE BAND RECEIVERS 538 Kilocycles to 22 Megacycles (.6 to 550 Meters)

BAND No. 1 — 3.2 megacycles to 7.5 megacycles (40 to 85 meters).
BAND No. 2 — 7.5 megacycles to 17 megacycles (18 to 40 meters).
BAND No. 3 — 13.5-1500 Kcs. (193-550 meters).
BAND No. 4 — 17 megacycles to 16 megacycles (18 to 8 meters).
BAND No. 5 — 1500 Kcs. to 3.6 megacycles (83 to 200 meters).

©John F. Rider, Publisher

PETER PAN RADIO CO.

MODELS 4,4-S
MODEL 34
MODEL 45
MODEL 56
Schematics

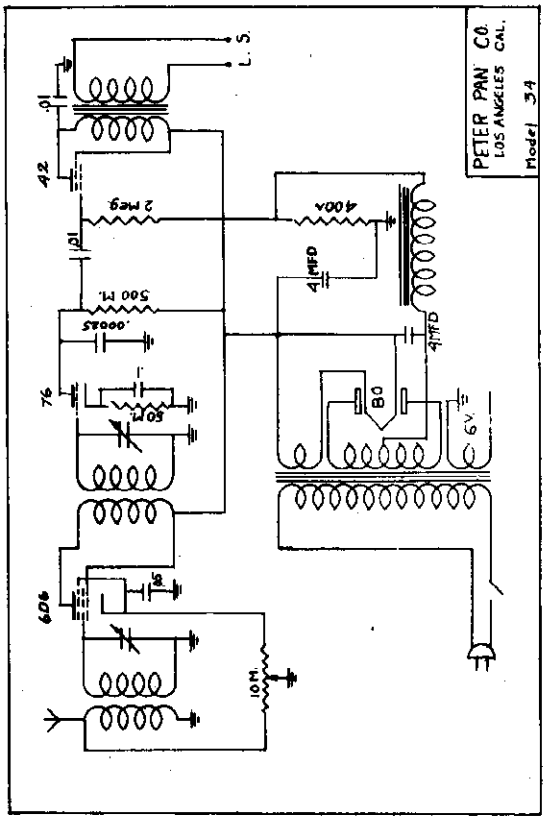

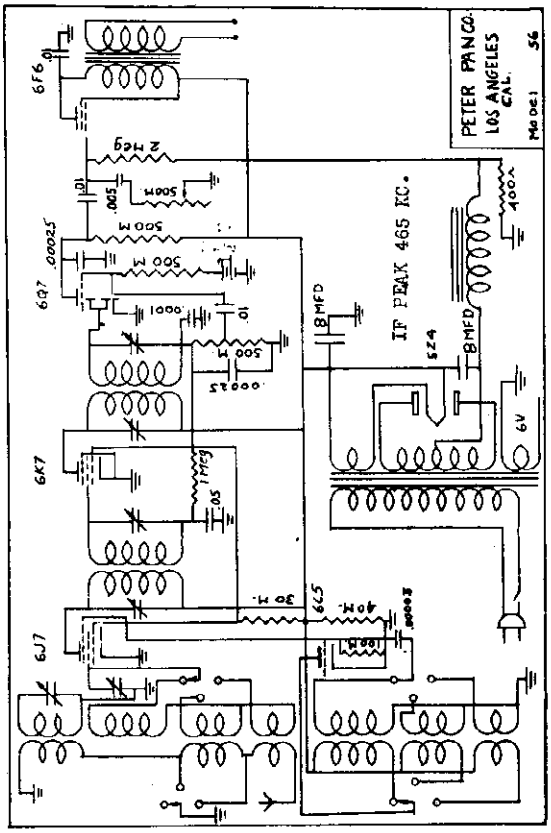

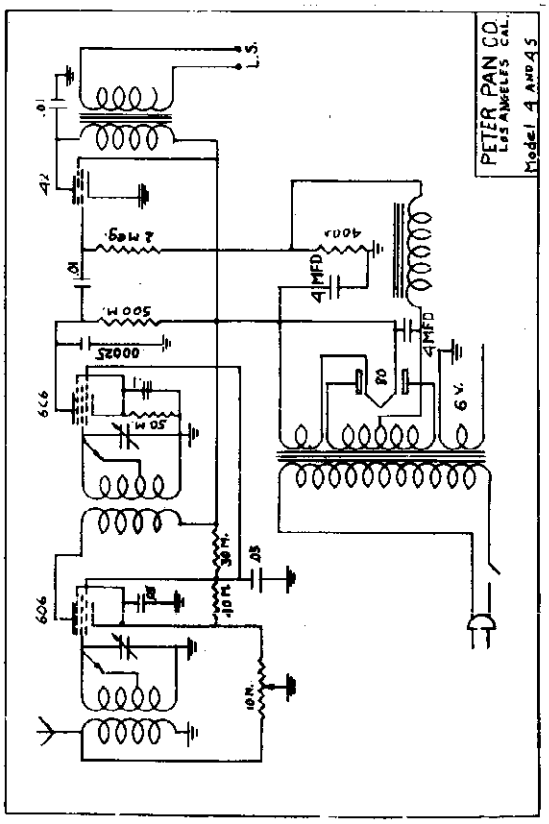

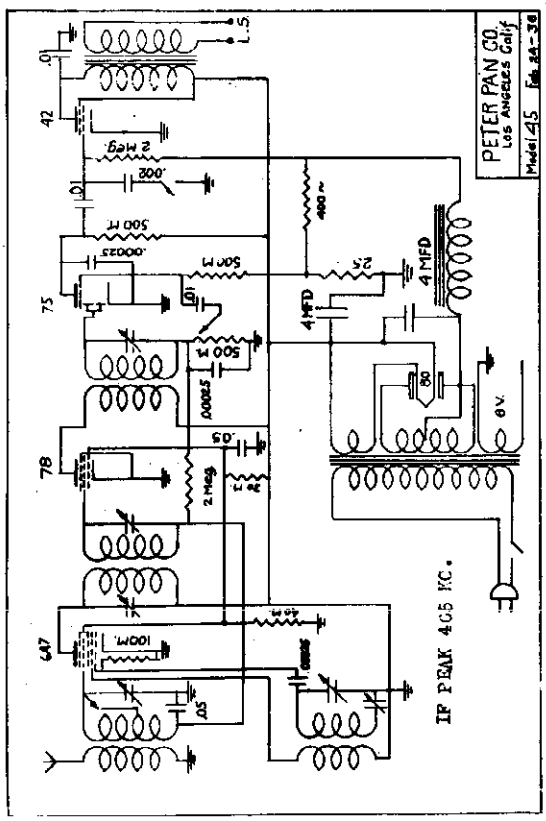

©John F. Rider, Publisher

MODEL B
MODEL 4(w.Tone Cont.)
MODELS 25AV,25UV
Schematics

PETER PAN RADIO CO.

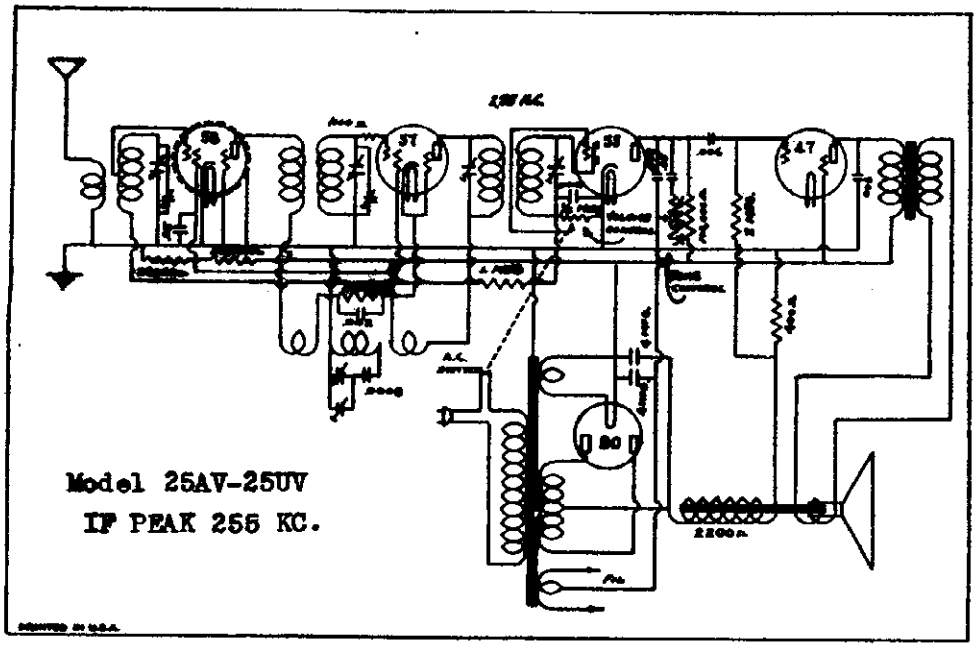

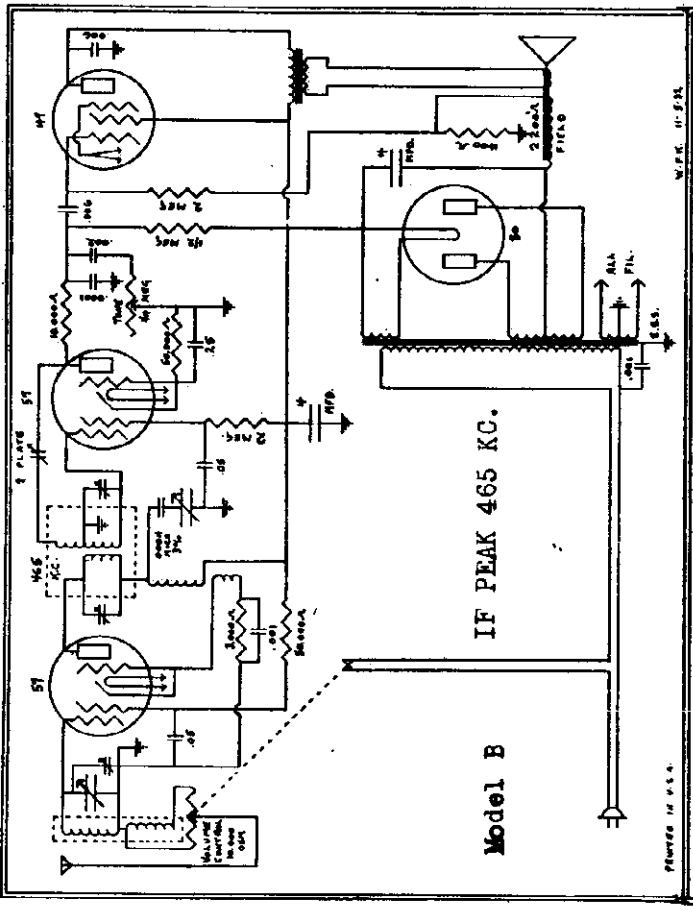

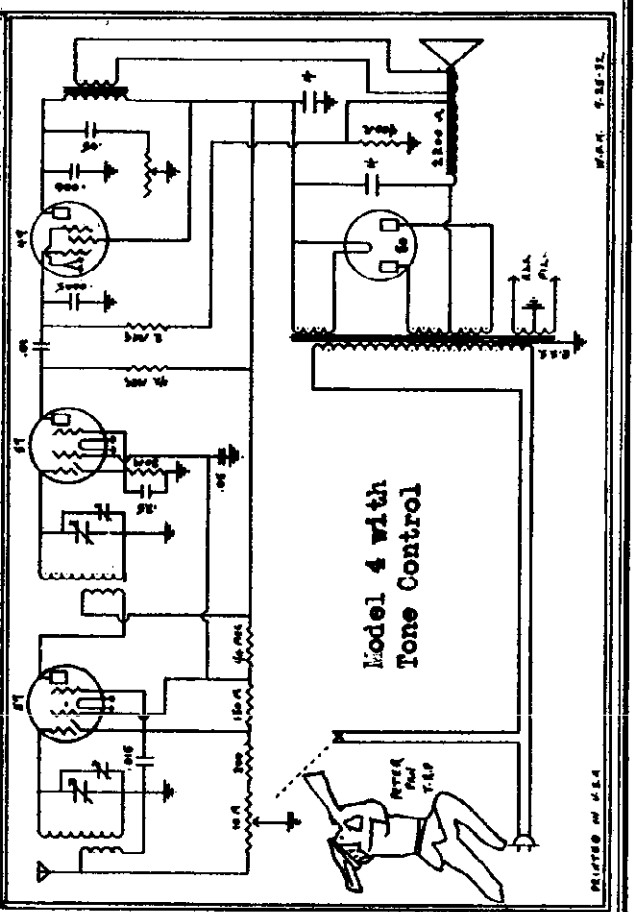

©John F. Rider, Publisher

PHILCO RADIO & TELEV. CORP.

MODEL FT-6 Ford 7-1
Schematic, Socket
Trimmers, Chassis, Parts

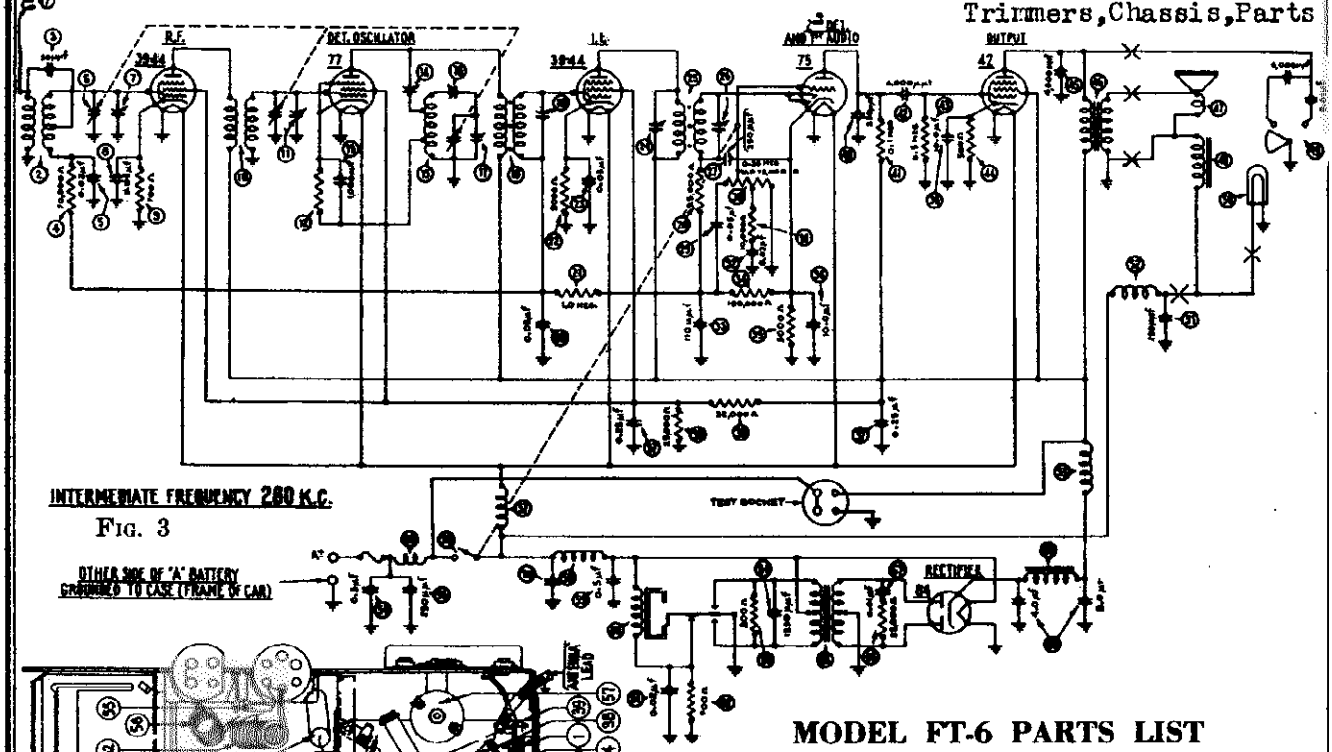

FIG. 3

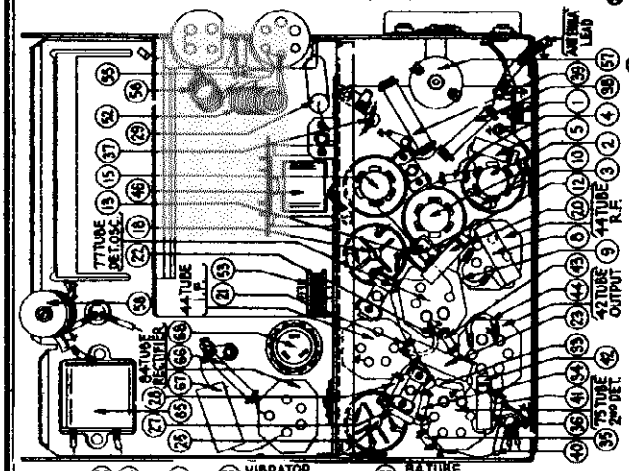

FIG. 2

FIG. 4

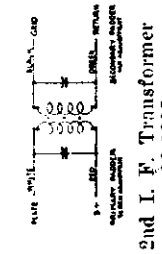

2nd I. F. Transformer
32-1237

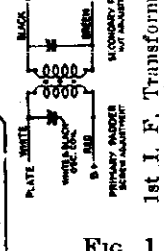

1st I. F. Transformer
32-1329

FIG. 1

MODEL FT-6 PARTS LIST

No. Shown on Schematic	Description	Part No.
(1)	Antenna Choke	32-1372
(2)	Antenna Transformer	32-1535
(3)	Condenser (50 mmfd.)	30-1029
(4)	Resistor (70,000 ohms)	33-1115
(5)	Condenser (.03 mfd.)	30-4025
(6)	Tuning Condenser	31-1459
(7)	1st Padder (on tun. cond.)	
(8)	Condenser (.05 mfd.)	30-4020
(9)	Resistor (700 ohms)	6443
(10)	R. F. Transformer	32-1536
(11)	2nd Padder (on tun. cond.)	
(12)	Resistor (11,000 ohms)	33-1194
(13)	Condenser (1000 mmfd.)	30-1007
(14)	Padder (Pri. 1st I. F. Trans.)	
(15)	Oscillator Transformer	32-1537
(16)	3rd Padder (on tun. cond.)	
(17)	4th Padder (on tun. cond.)	
(18)	First I. F. Transformer	32-1329
(19)	Padder (Sec. 1st I. F. Trans.)	
(20)	Condenser (.03 mfd.)	30-4025
(21)	Resistor (1.0 meg.)	33-1096
(22)	Resistor (2000 ohms)	33-3048
(23)	Condenser (.05 mfd.)	30-4020
(24)	Padder (Pri. 2nd I. F. Trans.)	
(25)	Second I. F. Transformer	32-1237
(26)	Padder (Sec. 2nd I. F. Trans.)	
(27)	Condenser (250 mmfd.)	30-1032
(28)	Resistor (25,000 ohms)	33-1013
(29)	Condenser (.05 mfd.)	30-4020
(30)	Vol. Con. & Switch Assm.	33-5067
(31)	Resistor (10,000 ohms)	33-1000
(32)	Condenser (.03 mfd.)	30-4025
(33)	Condenser (110 mmfd.)	30-1031
(34)	Resistor (190,000 ohms)	33-1116
(35)	Resistor (5000 ohms)	6096
(36)	Condenser (10-10 mfd.)	30-2076
(37)	Condenser (.25-.25 mfd.)	30-4126
(38)	Resistor (25,000 ohms)	3656
(39)	Resistor (32,000 ohms)	3525
(40)	Condenser (250 mmfd.)	30-1032
(41)	Resistor (.1 meg.)	6099
(42)	Condenser (6000 mmfd.)	30-4125
(43)	Resistor (.5 meg.)	6097
(44)	Resistor (500 ohms)	33-3031
(45)	Condenser (4000 mmfd.)	30-4185
(46)	Output Transformer	32-7347

No. Shown on Schematic	Description	Part No.
(47)	Cone and Voice Coil	02861
(48)	Field Coil Assembly	36-3097
(49)	Tone Control	30-4243
(50)	Pilot Lamp	34-2039
(51)	Condenser (250 mmfd.)	30-1032
(52)	Choke	32-1374
(53)	R. F. Choke	32-1078
(54)	Condenser (.5 mfd.)	30-4018
(55)	Condenser (250 mmfd.)	30-1032
(56)	"A" Choke	32-1374
(57)	"A" Choke	32-1368
(58)	Vibrator Choke	32-1367
(59)	Condenser (.5 mfd.)	30-4227
(60)	Vibrator	38-5036
(61)	Condenser (.02 mfd.)	30-4039
(62)	Resistor (200 ohms)	7217
(63)	Resistor (200 ohms)	7217
(64)	Condenser (1250 mmfd.)	5886
(65)	Power Transformer	32-7232
(66)	Resistor (32,000 ohms)	3525
(67)	Condenser (.01 mfd.)	30-4051
(68)	Filter Condenser (4-8 mfd.)	30-2030
(69)	"B" Choke	32-7233
(70)	Condenser (110 mmfd.)	30-1031
	4-prong Socket	27-6006
	5-prong Socket	27-6014
	6-prong Socket	27-6020
	Spark Plug Resistor	33-1015
	Spark Plug Terminal	28-6179
	Interference Cond. (Gen.)	30-4181
	Interference Cond. (Dist.)	30-4176
	Face Assembly	42-5302
	Glass for Control	27-7757
	Knobs	27-4171
	Pointer	28-2605
	Flexible Shaft (Tuning)	28-8331
	Flexible Shaft (Volume)	28-8332
	Ammeter Cable	38-5749
	Fuse	7227
	Fuse Insulator	27-7131
	Antenna Lead	L1741
	"T" Bolt (set mounting)	28-8161
	Nut (set mounting)	W318A
	Speaker Cable	41-3125
	Tow Strap	36-3432
	"U" Clamp Control Mtg.	29-2699

©John F. Rider, Publisher

MODEL FT-6 Ford
Alignment

PHILCO RADIO & TELEV. CORP.

I. F. TRANSFORMER AND PADDERS

The I. F. transformers are assembled complete with padding condensers.

The padders are placed in the top of the shield can one above the other.

The primary padder is adjusted by means of the screw slot, accessible through the hole in the top of the shield can. The secondary padder is adjusted by means of the small hex nut, also accessible through the hole in the top of the shield. (See Figs. 1 and 2.)

The coil windings terminate in leads instead of terminals or lugs. The color scheme of the leads is given in Fig. 1.

If replacements are ever necessary, replace the entire coil assembly 32-1329 for the first I. F. stage and 32-1237 for the second I. F. stage. Neither the coil nor the padders will be furnished separately. Order only by the above numbers.

MODEL FT-6 RECEIVER

THE new Ford auto radio incorporates new advanced principles of circuit and tube design. A totally new idea in sound distribution and musical fidelity is built into a dynamic speaker located above the occupants' heads in the header-bar of the car. Other features of the set are two-unit construction with separate speaker, highly developed Automatic Volume Control, illuminated custom-built instrument panel control, mounting in the ash receptacle opening.

The Receiver is mounted directly above the steering column out of sight and out of the way.

MODEL FT-6 ADJUSTMENTS

All adjustments have been carefully checked at the factory. If, however, it is found necessary to readjust the padding condensers, this procedure must be followed carefully. Do not attempt to make any adjustments until the procedure is clearly understood or without the use of a good oscillator or signal generator and output meter. The PHILCO Set Tester 048 is highly recommended for this procedure and for all service work.

The Receiver must be connected to a six-volt storage battery and set up for operation. It is assumed that tubes have been checked and that the Receiver is in good condition except for the padding adjustments.

Remove the cover from the Receiver and disconnect the grid clip from the 77 tube. (For location see Fig. 2.)

Set up the signal generator and adjust it to exactly 260 K.C. Connect the generator lead to the grid cap of the 77 tube, and ground the shield to the Receiver housing.

Connect one lead from the output meter to the plate of the 42 tube and the other lead to the receiver housing. The Receiver volume control must be turned to approximately full volume and the attenuator in the generator set for a half-scale reading of the output meter.

The primary screw padders ㉔ and ㉕ must be screwed all the way in. (Figs. 2 and 3.) The secondary nut padders ㉖ and ㉗ must then be adjusted. These padders should be adjusted for maximum reading on the output meter.

The screw padders ㉓ and ㉔ must be adjusted next.

Adjust the screw on each padder for maximum reading on the meter. This adjustment is critical. Note the maximum reading obtainable. Turn the screw in again and readjust, just bringing the adjustment up to the maximum reading. Do not pass it and then back off.

After padding the I. F. stages, remove the generator lead from the 77 tube and reconnect the grid clip to the 77 tube. Adjust the generator to 1580 K.C. and then connect the generator lead to the antenna lead. Ground the shield to the receiver housing.

Using a piece of paper approximately .006 inch in thickness, place it under the heel of the tuning condenser between the stator and rotor plates and turn the tuning condenser until the rotor plates strike this paper.

With the tuning condenser in this position, adjust the high-frequency padder ㉒ until the maximum reading is obtained in the output meter. This is the true setting for 1580 K.C., 158 on the dial scale. Adjust condensers ㉑ and ⑦ in the same manner.

Remove the paper and turn the tuning condenser plates in mesh to approximately 60 on the scale, and adjust the signal generator to 600 K.C. Roll the tuning condenser and adjust the series padder ⑲ for the maximum meter reading.

Readjust the padder ㉒ at 1580 K.C.

Tune the gang to 1400 K.C. and adjust padders ⑪ and ⑦ to maximum.

If this procedure has been carefully followed and an accurately calibrated oscillator or signal generator used, the receiver will be adjusted properly.

©John F. Rider, Publisher

PHILCO RADIO & TELEV. CORP.

MODEL CT-11 Chrysler
Schematic, Chassis
Parts

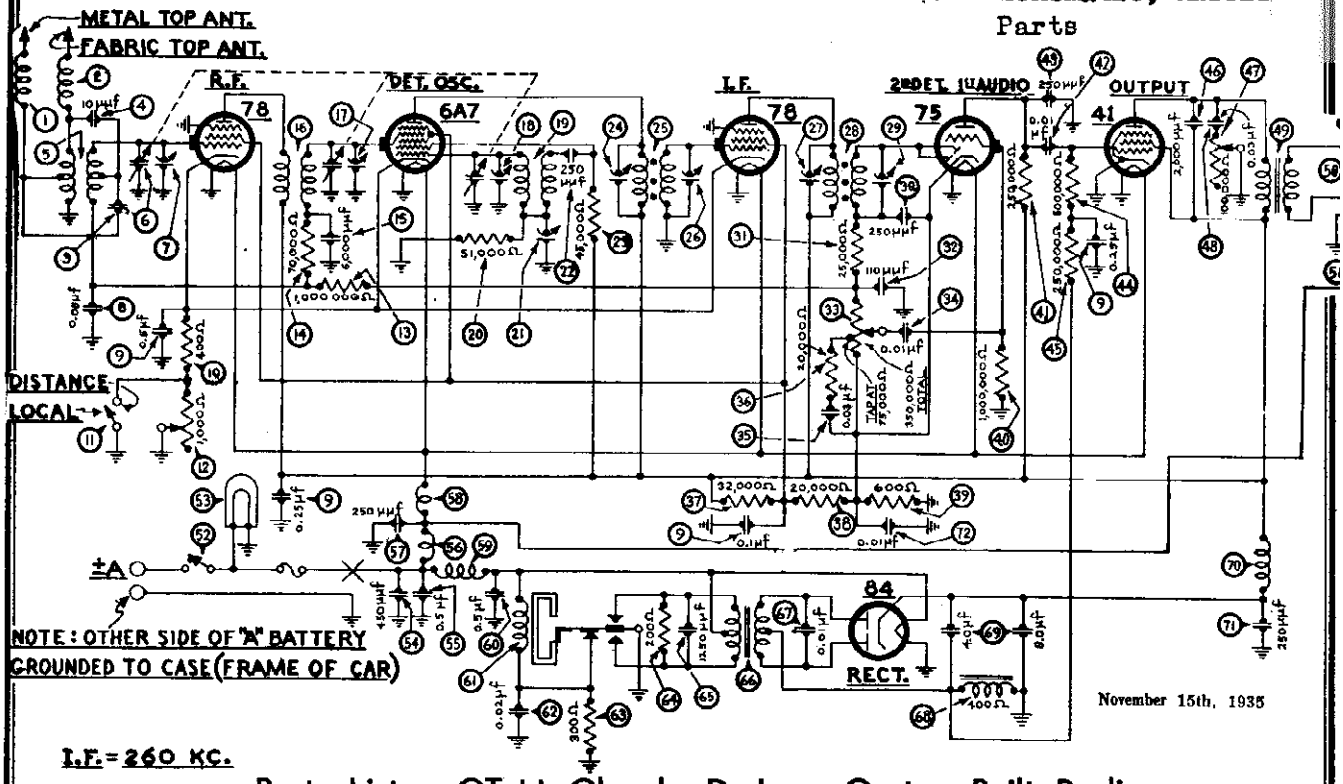

Parts List — CT-11 Chrysler De Luxe Custom-Built Radio

No.	Description	Part No.
①	Antenna Choke	38-7210
②	Antenna Choke	38-7210
③	Condenser (70 mmfd.)	30-1068
④	Condenser (10 mmfd.)	30-1065
⑤	Antenna Transformer	32-1925
⑥	Tuning Condenser	31-1674
⑦	First Padder (on tun. cond.)	
⑧	Condenser (.05 mfd.)	30-4020
⑨	Condenser (.1-.25-.25-.5 mfd.)	30-4374
⑩	Resistor (400 ohms)	33-1211
⑪	Sensitivity Control Switch	42-1140
⑫	Sensitivity Control	33-5129
⑬	Resistor (1,000,000 ohms)	33-1096
⑭	Resistor (70,000 ohms)	33-1115
⑮	Condenser (6000 mmfd.)	30-4125
⑯	R. F. Transformer	32-1926
⑰	Second Padder (on tun. cond.)	
⑱	Third Padder (on tun. cond.)	
⑲	Oscillator Transformer	32-1927
⑳	20Resistor (51,000 ohms)	6098
㉑	Low Frequency Padder	31-6056
㉒	Condenser (250 mmfd.)	30-1032
㉓	Resistor (45,000 ohms)	5256
㉔	Padder (pri. 1st I. F. trans.)	
㉕	First I. F. Transformer	32-1928
㉖	Padder (Sec. 1st I. F. trans.)	
㉗	Padder (Pri. 2nd I. F. trans.)	
㉘	Second I. F. Transformer	32-1929
㉙	Padder (Sec. 2nd I. F. trans.)	
㉚	Condenser (250 mmfd.)	30-1032
㉛	Resistor (25,000 ohms)	33-1013
㉜	Condenser (110 mmfd.)	30-1031
㉝	Volume Control (350,000 ohms)	33-5121
㉞	Condenser (.01 mfd.)	30-4124
㉟	Condenser (.03 mfd.)	30-4025
㊱	Resistor (20,000 ohms)	33-1178
㊲	Resistor (32,000 ohms)	3525
㊳	Resistor (20,000 ohms)	6650
㊴	Resistor, (600 ohms)	33-1212
㊵	Resistor (1,000,000 ohms)	33-1096
㊶	Resistor (250,000 ohms)	33-1097
㊷	Condenser (.01 mfd.)	30-4145
㊸	Condenser (250 mmfd.)	30-1032
㊹	Resistor (500,000 ohms)	6097
㊺	Resistor (250,000 ohms)	33-1097
㊻	Condenser (2000 mmfd.)	30-4177
㊼	Tone Control	33-5141
㊽	Condenser (.03 mfd.)	30-4380
㊾	Output Transformer	2598
㊿	Cone & Voice Coil	36-3159
(51)	Field Coil Assembly	02795
(52)	On and Off Switch	42-5408
(53)	Pilot Lamp	34-2039
(54)	Condenser (450 mmfd.)	31-6065
(55)	Condenser (.5 mfd.)	30-4047
(56)	"A" Choke	32-1644
(57)	Condenser (250 mmfd.)	30-1032
(58)	Choke	32-1930
(59)	Vibrator Choke	32-1933
(60)	Condenser (.5 mfd.)	30-4047
(61)	Vibrator	38-5036
(62)	Condenser (.02 mfd.)	30-4039
(63)	Resistor (300 ohms)	33-3130
(64)	Resistor (200 ohms)	33-1210
(65)	Condenser (1250 mmfd.)	5886
(66)	Power Transformer	32-7482
(67)	Condenser (.01 mfd.)	30-4381
(68)	Filter Choke	32-7491
(69)	Filter Condenser (4-8 mfd.)	30-2134
(70)	R. F. Choke	32-193'
(71)	Condenser (250 mmfd.)	30-1032
(72)	Condenser (.01 mfd.)	30-4124
	Four Hole Socket	27-6044
	Five Hole Socket	27-6035
	Six Hole Socket	27-6036
	Seven Hole Socket	27-6037
	Designation Plate	28-3290
	Spark Plug Resistor	33-1015
	Distributor Resistor	33-1113
	Interference Condenser (.5 mfd.)	30-4007
	Interference Condenser (1 mfd.)	4522
	Receiver Housing	38-1568
	Carriage Bolt (Set Mtg.)	W825B
	Nut (Set Mtg.)	W98A
	Washer (Set Mtg.)	4486
	Bracket (Set Mtg.)	29-3086
	Clamp (Control Mtg.) Plymouth and DeSoto Deluxe	29-3300
	Clamp (Control Mtg.) Dodge	29-3281
	Clamp (Control Mtg.) DeSoto Custom	29-3223
	Clamp (Control Mtg.) Chrysler	29-3280
	Nut (Clamp Mtg.)	W317A
	Fuse	7227
	Fuse Insulator	27-7131
	Control Stud	28-6145
	Pilot Lamp Assembly	38-7213
	Tuning Control Shaft	28-8439
	Volume Control Shaft	28-8440
	Tone Control Shaft	28-8441
	Drum Assembly (Chrysler)	42-5437
	Drum Assembly (DeSoto DeLuxe)	42-5436

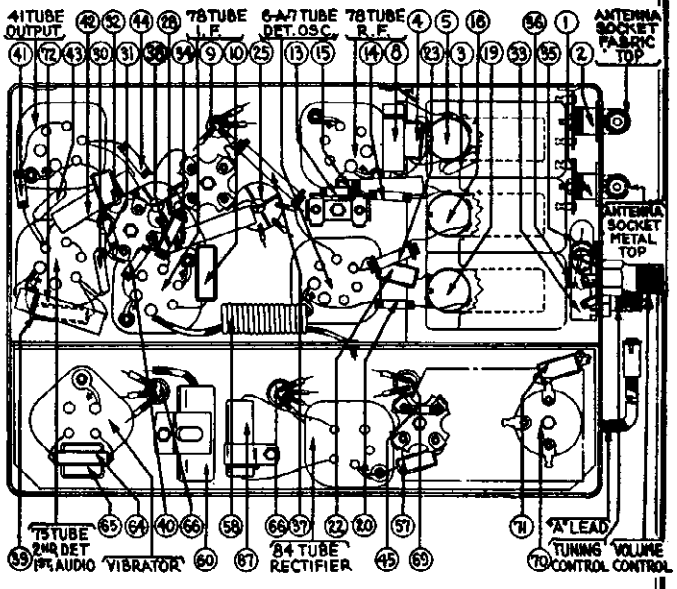

FIGURE 4

Description	Part No.
Drum Assembly DeSoto Custom	42-5505
Drum Assembly (Dodge)	42-5435
Drum Assembly (Plymouth)	42-5407
Tuning and Volume Knob (Plymouth P-1)	27-4263
Tuning and Volume Knob (Plymouth P-2)	27-4233
Tuning and Volume Knob (Dodge)	27-4246
Tuning and Volume Knob (Chrysler C-7)	27-4235
Tuning and Volume Knob (Chrysler C-8)	27-4234
Tuning and Volume Knob (DeSoto)	27-4243
Tone Control Knob (Plymouth P-1)	27-4264
Tone Control Knob (Plymouth P-2)	27-4227
Tone Control Knob (Dodge)	27-4245
Tone Control Knob (Chrysler C-7)	27-4229
Tone Control Knob (Chrysler C-8)	27-4228
Tone Control Knob (DeSoto)	27-4242
Shield Loom Assembly	38-7295

©John F. Rider, Publisher

MODEL CT-11 Chrysler
Socket, Trimmers
Alignment

PHILCO RADIO & TELEV. CORP.

Chrysler DeLuxe Custom Built Radio Model CT11

NOVEMBER 15th, 1935

I. F. Transformers and Padders Model CT11

The I. F. transformers are assembled complete with padding condensers.

Both the primary and the secondary padders are placed side by side in the top of the transformer shield can. The adjusting screws are accessible thru the holes in the top of the shield. (See Fig. 2).

The coil windings terminate in leads instead of terminals or lugs. The color scheme of the leads is given in Fig. 1.

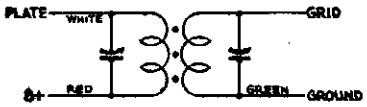

FIGURE 1

If replacements are ever necessary, replace the entire coil assembly, 32-1928 for the first I. F. stage and 32-1929 for the second I. F. stage. Neither the coil nor the padders will be furnished separately. Order only by the above numbers.

Model CT11 Adjustments

All padding adjustments are carefully made at the factory and ordinarily no readjustments are necessary. However, when readjustments to the Model CT-11 are required, the procedure given below must be followed in detail.

Equipment

Fully charged heavy duty storage battery or 6-volt power pack, 046A Philco Set Tester, 3164 Padding wrench, 27-7159 Padding screw driver.

General

OUTPUT METER — The output meter must be connected by means of an adapter to the plate of the type 41 output tube and to the Receiver chassis.

SIGNAL GENERATOR — With the Receiver and signal generator set up for operation at the prescribed frequency, turn the Receiver volume control on full and set the signal generator attenuator so that a half scale reading is obtained on the output meter. The signal in the speaker should be audible but not loud.

The shielding on the signal generator output lead must be connected to the Receiver housing.

The sensitivity switch must be in the "distance" position. The tone control should be turned to the brilliant position.

Procedure

I. F. — Adjust the signal generator to exactly 260 K. C. Connect the generator lead to the grid cap of the 78 I. F. tube in series with a .1 mfd. condenser.

Adjust the secondary screw padder ㉙ on the second I. F. transformer for maximum reading on the output meter. Then adjust the primary screw padder ㉗ for maximum reading. (See Fig. 2 for location of padders).

Remove the generator lead from the 78 tube.

Connect the generator lead to the grid cap of the 6A7 tube in series with a .1 mfd. condenser. Adjust the secondary screw padder ㉖ on the first I. F. transformer for maximum reading on the output meter. Then adjust the primary screw padder ㉔ for maximum reading. (See Figure 2 for location of padders).

HIGH FREQUENCY AND R. F. — After padding the first I. F. stage remove the generator lead from the 6A7 tube.

Adjust the signal generator to 1600 K. C. and then connect the generator lead to the grid cap of the 78 R. F. tube in series with a .1 mfd. condenser.

Turn the tuning condenser plates out of mesh as far as they will go. With the tuning condenser in this position, adjust the high frequency padder ⑱ and the R. F. padder ⑰ until the maximum reading is obtained on the output meter. This is the true setting for 1600 K. C., 160 on the dial scale.

LOW FREQUENCY — Turn the tuning condenser plates in mesh to approximately 580 K. C., 58 on the dial scale and adjust the signal generator to the 580 K. C. Roll the tuning condenser and adjust the low frequency padder screw ㉑ for maximum reading on the output meter.

HIGH FREQUENCY RE-ADJUSTMENT — Turn the tuning condenser plates out of mesh as far as they will go and adjust the signal generator to 1600 K. C. Then adjust the high frequency padder ⑱ again for maximum reading on the output meter.

ANTENNA —Connect the generator lead to the antenna cable assembly (made up of Part No. L1915 loom and 40 inches of 16 strand No. 30 wire), using a 110 mmfd. condenser in series between the two leads. Plug the cable into the antenna socket marked "fabric top."

Turn the tuning condenser to 1400 K. C. and set the generator for 1400 K. C. Adjust the padders ⑰ and ⑦ for the maximum reading on the output meter.

When the antenna stage adjustment is made with the Receiver installed in the car, the Receiver antenna lead must be connected to the car antenna in the usual manner. The signal generator output lead should be connected to a wire placed near the car antenna but not connected to it.

If this procedure has been carefully followed and an accurately calibrated oscillator or signal generator has been used, the Receiver will be adjusted properly.

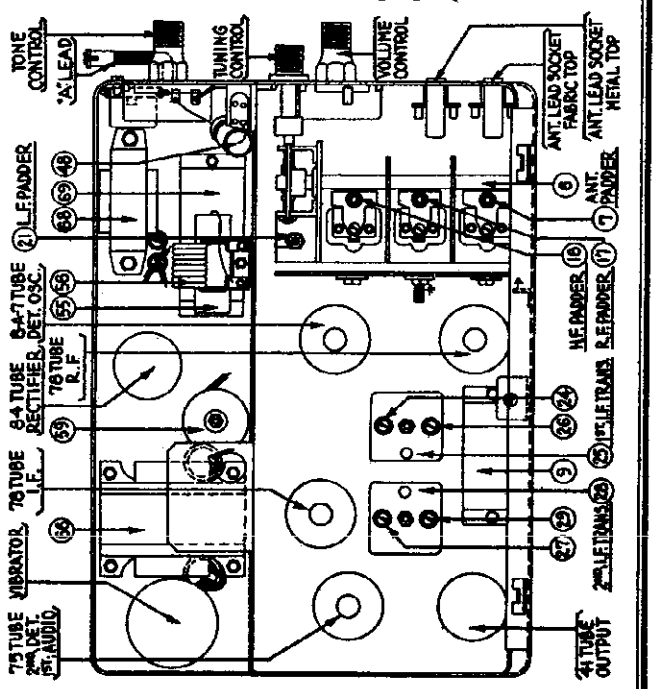

FIGURE 2

©John F. Rider, Publisher

Schematic, Chassis Parts

PHILCO RADIO & TELEV. CORP.

MODELS NT12X, NT12X2 Nash, Lafayette

Nash-Philco Model NT12X and NT12X2 Two Unit Receiver

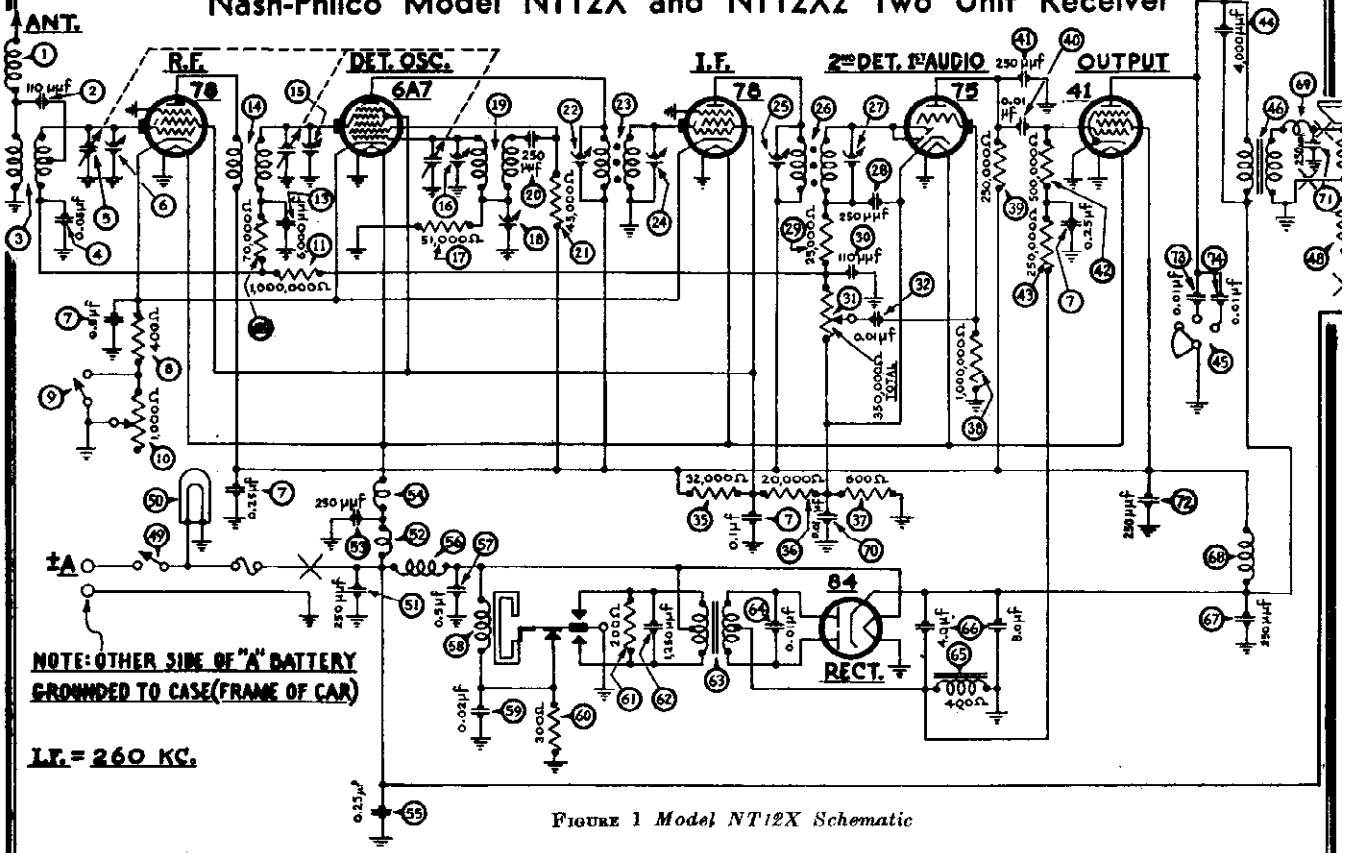

FIGURE 1 *Model NT12X Schematic*

The Model NT12X Receiver (Nash—AC-1889) is made for the Nash 400 and Lafayette 3610 cars, using the Nash under-car Ant
The Model NT12X2 Receiver (Nash—AC1789) is made for the Nash 3620 — 3680 cars using the insulated metal top antenna.
The Models NT12X and NT12X2 Receivers are not interchangable.

Model NT12X and NT12X2 Parts List

① Antenna Choke	38-7210	㊶ Condenser (250 mmfd.)	30-1032
② Condenser (110 mmfd.)	30-1031	㊷ Resistor (500,000 ohms)	38-449344
③ Antenna Transformer (NT12X)	32-1934	㊸ Resistor (250,000 ohms)	33-424844
③ Antenna Transformer (NT12X2)	32-1990	㊹ Condenser (4000 mmfd.)	30-4185
④ Condenser (.05 mfd.)	30-4020	㊺ Tone Control Switch	42-1139
⑤ Tuning Condenser (NT12X)	31-1674	㊻ Output Transformer	32-7495
⑥ Tuning Condenser (NT12X2)	31-1728	㊼ Cone and Voice Coil	36-3526
⑥ First Padder (on tun. cond.)	....	㊽ Field Coil	32-9236
⑦ Condenser (.1-.25-.25-.5 mfd.)	30-4374	㊾ On and Off Switch	42-5466
⑧ Resistor (400 ohms)	33-1211	㊿ Pilot Lamp	34-2040
⑨ Sensitivity Control Switch	42-1145	(51) Condenser (250 mmfd.)	30-1032
⑩ Sensitivity Control	33-5129	(52) "A" Choke	32-1644
⑪ Resistor (1,000,000 ohms)	33-510344	(53) Condenser (250 mmfd.)	30-1032
⑫ Resistor (70,000 ohms)	33-370334	(54) Choke	32-1930
⑬ Condenser (6000 mmfd.)	30-4125	(55) Condenser (.25 mfd.)	30-4146
⑭ R. F. Transformer	32-1926	(56) Vibrator Choke	32-1968
⑮ Second Padder (on tun. cond.)	....	(57) Condenser (.5 mfd.)	30-4047
⑯ Third Padder (on tun. cond.)	....	(58) Vibrator	38-5036
⑰ Resistor (51,000 ohms)	33-351344	(59) Condenser (.02 mfd.)	30-4039
⑱ Low Frequency Padder	31-6056	(60) Resistor (300 ohms)	33-3130
⑲ Oscillator Transformer	32-1927	(61) Resistor (200 ohms)	33-1210
⑳ Condenser (250 mmfd.)	30-1032	(62) Condenser (1250 mmfd.)	.5886
㉑ Resistor (45,000 ohms)	33-345344	(63) Power Transformer	32-7488
㉒ Padder (Pri. 1st I. F. Trans.)	....	(64) Condenser (.01 mfd.)	30-4381
㉓ First I. F. Transformer	32-1928	(65) Filter Choke	32-7491
㉔ Padder (Sec. 1st I. F. Trans.)	....	(66) Filter Conden ser(4-8 mfd.)	30-2134
㉕ Padder (Pri. 2nd I. F. Trans.)	....	(67) Condenser (250 mmfd.)	30-1032
㉖ Second I. F. Transformer	32-1929	(68) R. F. Choke	32-1932
㉗ Padder (Sec. 2nd I. F. Trans.)	....	(69) Choke	32-1464
㉘ Condenser (250 mmfd.)	30-1032	(70) Condenser (.01 mfd.)	30-4124
㉙ Resistor (25,000 ohms)	33-325344	(71) Condenser (250 mmfd.)	30-1032
㉚ Condenser (110 mmfd.)	30-1031	(72) Condenser (250 mmfd.)	30-1032
㉛ Volume Control (350,000 ohms)	33-5139	(73) Condenser (.01 mfd.)	30-4051
㉜ Condenser (.01 mfd.)	30-4124	(74) Condenser (.01 mfd.)	30-4051
㉝ Resistor (32,000 ohms)	3525	Four Hole Socket	27-6044
㉞ Resistor (20,000 ohms)	33-320334	Five Hole Socket	27-6035
㉟ Resistor (600 ohms)	33-1212	Six Hole Socket	27-6036
㊱ Resistor (1,000,000 ohms)	33-510344	Seven Hole Socket	27-6037
㊲ Resistor (250,000 ohms)	33-424344	Distributor Resistor	4851
㊳ Condenser (.01 mfd.)	30-4145	Interference Condenser (.5 mfd.)	30-4007
		Dial	27-5152
		Knob (Tun. and Vol.)	27-4258
		Knob (Sensitivity Switch)	27-4261
		Speaker Cable	41-3175

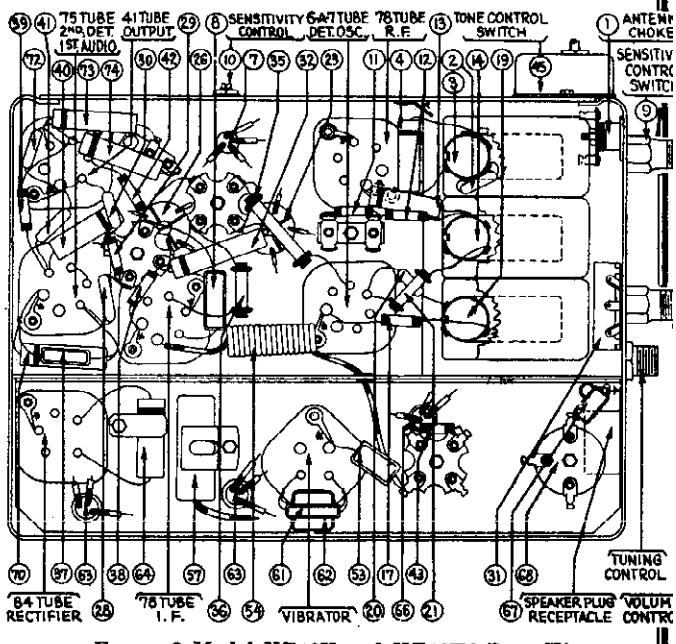

FIGURE 2 *Model NT12X and NT12X2 Base View*

Receiver Housing	38-1589	Fuse Insulator	27-772
Tuning Shaft	28-8452	Tee Bolt (Rec. Mtg.)	28-616
Volume Shaft	28-8453	Nut (Rec. Mtg.)	W518
Sensitivity Switch Shaft	28-8454	Tow Strap	36-340
Fuse	7227		

©John F. Rider, Publisher

MODELS NT12X,NT12X2
Socket,Trimmers
Alignment

PHILCO RADIO & TELEV. CORP.

I. F. Transformers and Padders
Model NT12X and NT12X2

The I. F. transformers are assembled complete with padding condensers.

Both the primary and the secondary padders are placed side by side in the top of the transformer shield can. The adjusting screws are accessible thru the holes in the top of the shield. (See Figure 8).

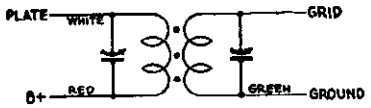

FIGURE 7

The coil windings terminate in leads instead of terminals or lugs. The color scheme of the leads is given in Figure 7.

If replacements are ever necessary, replace the entire coil assembly, 32-1928 for the first I. F. stage and 32-1929 for the second I. F. stage. Neither the coil nor the padders will be furnished separately. Order only by the above numbers.

Model NT12X Adjustments

All padding adjustments are carefully made at the factory and ordinarily no readjustments are necessary. However, when readjustments to the Model NT12X and NT12X2 are required, the procedure given below must be followed in detail.

Equipment

Fully charged heavy duty storage battery or 6-volt power pack, 048A Philco Set Tester, 3164 Padding wrench, 27-7159 Padding screw driver.

General

OUTPUT METER — The output meter must be connected by means of an adapter to the plate of the type 41 output tube and to the Receiver chassis.

SIGNAL GENERATOR — With the Receiver and signal generator set up for operation at the prescribed frequency, turn the Receiver volume control on full and set the signal generator attenuator so that a half scale reading is obtained on the output meter. The signal in the speaker should be audible but not loud.

The shielding on the signal generator output lead must be connected to the Receiver housing.

The sensitivity switch must be in the "distance" position. The tone control should be turned to the brilliant position.

Procedure

I. F. — Adjust the signal generator to exactly 260 K. C. Connect the generator lead to the grid cap of the 78 I. F. tube in series with a .1 mfd. condenser.

Adjust the secondary screw padder ㉗ on the second I. F. transformer for maximum reading on the output meter. Then adjust the primary screw padder ㉘ for maximum reading. (See Figure 8 for location of padders).

Remove the generator lead from the 78 tube.

Connect the generator lead to the grid cap of the 6A7 tube in series with a .1 mfd. condenser. Adjust the secondary screw padder ㉔ on the first I. F. transformer for maximum reading on the ouput meter. Then adjust the primary screw padder ㉕ for maximum reading. (See Figure 8 for location of padders).

HIGH FREQUENCY AND R. F. — After padding the first I. F. stage remove the generator lead from the 6A7 tube.

Adjust the signal generator to 1600 K. C. and then connect the generator lead to the grid cap of the 78 R. F. tube in series with a .1 mfd. condenser.

Turn the tuning condenser plates out of mesh as far as they will go. With the tuning condenser in this position, adjust the high frequency padder ⑯ and the R. F. padder ⑮ until the maximum reading is obtained on the output meter. This is the true setting for 1600 K. C., 160 on the dial scale.

LOW FREQUENCY — Turn the tuning condenser plates in mesh to approximately 580 K. C., 58 on the dial scale and adjust the signal generator to the 580 K. C. Roll the tuning condenser and adjust the low frequency padder screw ⑱ for maximum reading on the ouput meter.

HIGH FREQUENCY RE-ADJUSTMENT — Turn the tuning condenser plates out of mesh as far as they will go and adjust the signal generator to 1600 K. C. Then adjust the high frequency padder ⑯ again for maximum reading on the output meter.

ANTENNA

(NT12X only) — Connect the generator lead to the antenna cable assembly (made up of Part No. L1915 loom, 1-27-7133 terminal and 40 inches of 16 strand No. 30 wire), using a 200 mmfd. condenser in series between the two leads. Plug the cable into the antenna socket.

(NT12X2 only) — Connect the generator lead to the antenna lead using a 1250 mmfd. condenser and 50 ohms (non-inductive) as a dummy antenna. Plug the antenna lead into the antenna socket.

(NT12X and NT12X2) — Turn the tuning condenser to 1400 K. C. and set the generator for 1400 K. C. Adjust the padders ⑮ and ⑥ for the maximum reading on the output meter.

When the antenna stage adjustment is made with the Receiver installed in the car, the Receiver antenna lead must be connected to the car antenna in the usual manner. The signal generator output lead should be connected to a wire placed near the car antenna but not connected to it.

If this procedure has been carefully followed and an accurately calibrated oscillator or signal generator has been used, the Receiver will be adjusted properly.

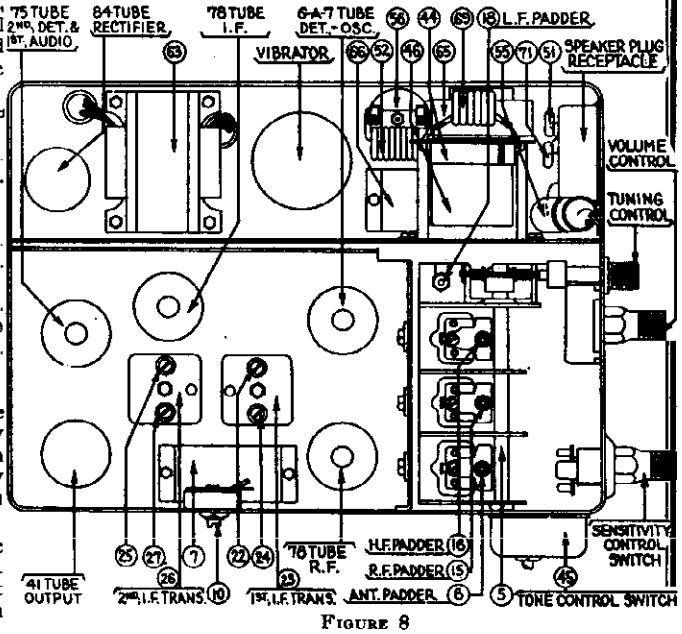

FIGURE 8

The Model NT12X Receiver (Nash—AC-1889) is made for the Nash 400 and Lafayette 3610 cars, using the Nash under-car Antenna. The Model NT12X2 Receiver (Nash—AC1789) is made for the Nash 3620—3680 cars, using the insulated metal top Antenna. The Models NT12X and NT12X2 Receivers are not interchangeable.

©John F. Rider, Publisher

PHILCO RADIO & TELEV. CORP.

MODEL ST-12
Studebaker
Schematic
Alignment

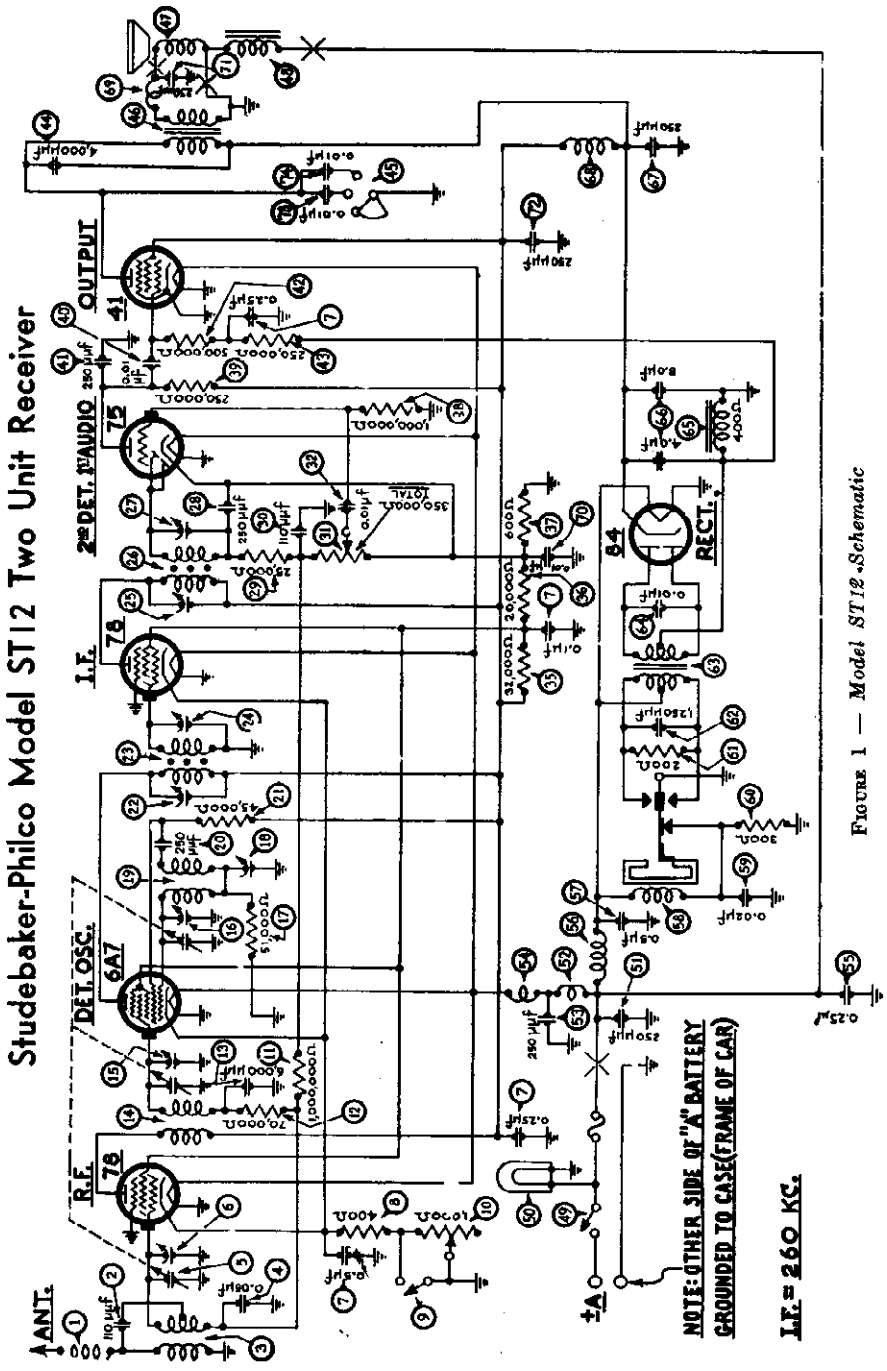

FIGURE 1 — *Model ST12 Schematic*

December 15, 1935

HIGH FREQUENCY RE-ADJUSTMENT — Turn the tuning condenser plates out of mesh as far as they will go and adjust the signal generator to 1600 K. C. Then adjust the high frequency padder ⑯ again for maximum reading on the output meter.

Adjust the signal generator to 1600 K. C. and then connect the generator lead to the grid cap of the 78 R. F. tube in series with a .1 mfd. condenser.

Turn the tuning condenser plates out of mesh as far as they will go. With the tuning condenser in this position, adjust the high frequency padder ⑯ and the R. F. padder ⑮ until the maximum reading is obtained on the output meter. This is the true setting for 1600 K. C., 160 on the dial scale.

LOW FREQUENCY — Turn the tuning condenser plates in mesh to approximately 580 K. C., 58 on the dial scale and adjust the signal generator to the 580 K. C. Roll the tuning condenser and adjust the low frequency padder screw ⑰ for maximum reading on the output meter

General

OUTPUT METER — The output meter must be connected by means of an adapter to the plate of the type 41 output tube and to the Receiver chassis.

SIGNAL GENERATOR — With the Receiver and signal generator set up for operation at the prescribed frequency, turn the Receiver volume control on full and set the signal generator attenuator so that a half scale reading is obtained on the output meter. The signal in the speaker should be audible but not loud.

The shielding on the signal generator output lead must be connected to the Receiver housing.

The sensitivity switch must be in the "distance" position. The tone control should be turned to the brilliant position.

Procedure

I. F. — Adjust the signal generator to exactly 260 K. C. Connect the generator lead to the grid cap of the 78 I. F. tube in series with a .1 mfd. condenser.

Adjust the secondary screw padder ㉗ on the second I. F. transformer for maximum reading on the output meter. Then adjust the primary screw padder ㉖ for maximum reading. (See Figure 8 for location of padders).

Remove the generator lead from the 78 tube.

Connect the generator lead to the grid cap of the 6A7 tube in series with a .1 mfd. condenser. Adjust the secondary screw padder ㉔ on the first I. F. transformer for maximum reading on the output meter. Then adjust the primary screw padder ㉒ for maximum reading. (See Figure 8 for location of padders).

©John F. Rider, Publisher

I. F. Transformers and Padders

Model ST12

The I. F. transformers are assembled complete with padding condensers.

Both the primary and the secondary padders are placed side by side in the top of the transformer shield can. The adjusting screws are accessible thru the holes in the top of the shield. (See Figure 8).

The coil windings terminate in leads instead of terminals or lugs. The color scheme of the leads is given in Figure 7

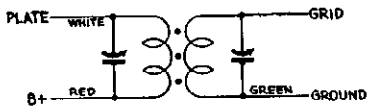

FIGURE 7

If replacements are ever necessary, replace the entire coil assembly, 32-1928 for the first I. F. stage and 32-1929 for the second I. F. stage. Neither the coil nor the padders will be furnished separately. Order only by the above numbers.

Model ST12 Adjustments

All padding adjustments are carefully made at the factory and ordinarily no readjustments are necessary. However, when readjustments to the Model ST12 are required, the procedure given below must be followed in detail.

Equipment

Fully charged heavy duty storage battery or 6-volt power pack, 048A Philco Set Tester, 3164 Padding wrench, 27-7159 Padding screw driver.

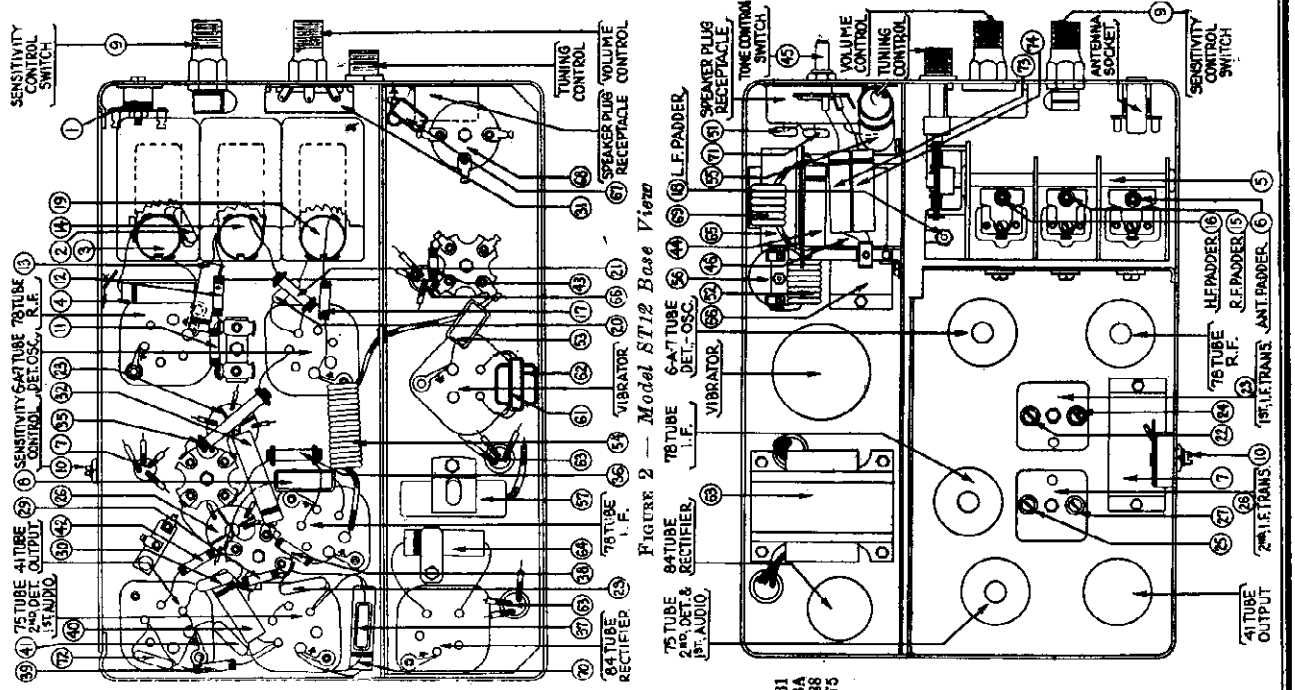

FIGURE 2 — *Model ST12 Base View*

Model ST12 Parts List

①	Antenna Choke	38-7210	
②	Condenser (110 mmfd.)	30-1031	
③	Antenna Transformer	32-1934	
④	Condenser (.05 mfd.)	30-4020	
⑤	Tuning Condenser	31-1674	
⑥	First Padder (on tun. cond.)		
⑦	Condenser (.1-.25-.5 mfd.)	30-4374	
⑧	Resistor (400 ohms)	33-1211	
⑨	Sensitivity Control Switch	42-1140	
⑩	Sensitivity Control	33-5129	
⑪	Resistor (1,000,000 ohms)	33-510344	
⑫	Resistor (70,000 ohms)	33-370344	
⑬	Condenser (6000 mmfd.)	30-4125	
⑭	R. F. Transformer	32-1928	
⑮	Second Padder (on tun. cond.)		
⑯	Third Padder (on tun. cond.)	33-351344	
⑰	Resistor (51,000 ohms)	33-351344	
⑱	Low Frequency Padder	31-6036	
⑲	Oscillator Transformer	32-1927	
⑳	Condenser (250 mmfd.)	30-1032	
㉑	Resistor (45,000 ohms)	33-345344	
㉒	Padder (Prl. 1st I. F. Trans.)		
㉓	First I. F. Transformer	32-1928	
㉔	Padder (Sec. 1st I. F. Trans.)		
㉕	Padder (Prl. 2nd I. F. Trans.)		
㉖	Second I. F. Transformer	32-1929	
㉗	Padder (Sec. 2nd I. F. Trans.)		
㉘	Condenser (250 mmfd.)	30-1032	
㉙	Resistor (25,000 ohms)	33-325344	
㉚	Condenser (110 mmfd.)	30-1031	
㉛	Volume Control (350,000 ohms)	33-5139	
㉜	Condenser (.01 mfd.)	30-4124	
㉝	Resistor (32,000 ohms)	33-323434	
㉞	Resistor (20,000 ohms)	33-320334	
㉟	Resistor (600 ohms)	33-1212	
㊱	Resistor (1,000,000 ohms)	33-510344	
㊲	Resistor (250,000 ohms)	33-424344	
㊳	Condenser (.01 mfd.)	30-4145	
㊴	Condenser (250 mmfd.)	30-1032	
㊵	Resistor (500,000 ohms)	33-449344	
㊶	Resistor (250,000 ohms)	33-424344	
㊷	Condenser (4000 mmfd.)	30-4185	
㊸	Tone Control Switch	42-1139	
㊹	Output Transformer	32-7495	
㊺	Cone and Voice Coil	36-3526	
㊻	Field Coil	32-9236	
㊼	On and Off Switch	42-1157	
㊽	Pilot Lamp	34-2039	
㊾	Condenser (250 mmfd.)	30-1032	
㊿	"A" Choke	32-1644	
(51)	Condenser (250 mmfd.)	30-1032	
(52)	Choke	32-1930	
(53)	Condenser (.25 mfd.)	30-4146	
(54)	Vibrator Choke	32-1968	
(55)	Condenser (.5 mfd.)	30-4047	
(56)	Vibrator	38-5036	
(57)	Condenser (.02 mfd.)	30-4039	
(58)	Resistor (300 ohms)	33-3130	
(59)	Resistor (200 ohms)	33-1210	
(60)	Condenser (1250 mmfd.)	5886	
(61)	Power Transformer	32-7488	
(62)	Condenser (.01 mfd.)	30-4381	
(63)	Filter Choke	32-7491	
(64)	Filter Condenser (4-8 mfd.)	30-2134	
(65)	Condenser (250 mmfd.)	30-1032	
(66)	R. F. Choke	32-1932	
(67)	Choke	32-1464	
(68)	Condenser (.01 mfd.)	30-4124	
(69)	Condenser (250 mmfd.)	30-1032	
(70)	Condenser (.01 mfd.)	30-4051	
(71)	Condenser (.01 mfd.)	30-4051	
(72)	Four Hole Socket	27-8044	
	Five Hole Socket	27-8035	
	Six Hole Socket	27-8036	
	Seven Hole Socket	27-8037	
	Distributor Resistor	4851	
	Interference Condenser (.5 mfd.)	30-4007	
	Interference Condenser (1 mfd.)	4522	
	Scale Assembly (Dictator)	42-5445	
	Scale Assembly (President)	42-5449	
	Knob (Sensitivity)	27-4261	
	Knob (Tun.&Vol.) Dictator	27-4252	
	Knob (Tun&Vol.) President	27-4254	
	Tee Bolt (Rec. Mtg.)	28-6161	
	Nuts (Rec. Mtg.)	W518A	
	Receiver Housing	38-1588	
	Speaker Cable	41-3175	
	Pointer Gear Shaft Assembly	42-5456	
	Tuning and Volume Shaft	28-8442	
	Sensitivity Switch Shaft	28-8444	
	Fuse	7227	
	Fuse Insulator	27-7729	

ANTENNA — Connect the generator lead to the antenna cable assembly (made up of Part No. L1915 loom, 1-27-7188 terminal and 40 inches of 16 strand No. 30 wire), using a 200 mmfd. condenser in series between the two leads. Plug the cable into the antenna socket.

Turn the tuning condenser to 1400 K. C. and set the generator for 1400 K. C. Adjust the padders ㉞ and ㉛ for the maximum reading on the output meter.

When the antenna stage adjustment is made with the Receiver installed in the car, the Receiver antenna lead must be connected to the car antenna in the usual manner. The signal generator output lead should be connected to a wire placed near the car antenna but not connected to it.

If this procedure has been carefully followed and an accurately calibrated oscillator or signal generator has been used, the Receiver will be adjusted properly.

©John F. Rider, Publisher

PHILCO RADIO & TELEV. CORP.

MODEL LT14X3 Lincoln
Schematic, Chassis
Parts List

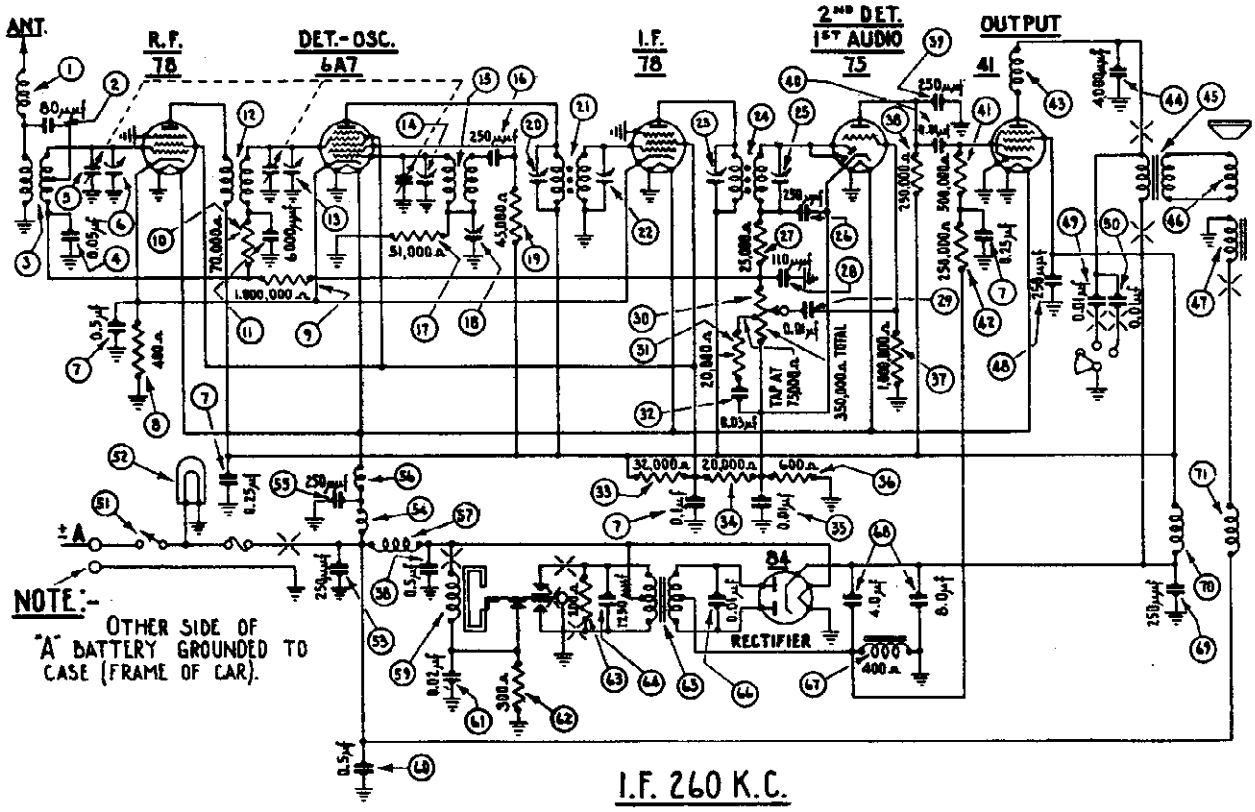

FIGURE 3

MODEL LT14X3 PARTS LIST

No.	Description	Part No.
1	Antenna Choke	38-7210
2	Condenser (80 mmfd.)	30-1066
3	Antenna Transformer	32-1975
4	Condenser (.05 mfd.)	30-4444
5	Tuning Condenser	31-1674
6	First Padder (on tun. cond.)	
7	Condenser (.1-.25-.25-.5 mfd.	30-4374
8	Resistor (400 ohms)	33-1211
9	Resistor (1,000,000 ohms)	33-510344
10	Resistor (70,000 ohms)	33-370334
11	Condenser (6000 mmfd.)	30-4445
12	R. F. Transformer	32-1926
13	Second Padder (on tun. cond).	
14	Third Padder (on tun. cond.)	
15	Oscillator Transformer	32-1927
16	Condenser (250 mmfd.)	30-1032
17	Resistor (51,000 ohms)	33-351344
18	Low Frequency Padder	31-6056
19	Resistor (45,000 ohms)	33-345344
20	Padder (Pri. 1st I.F. transf.)	
21	First I. F. Transformer	32-1928
22	Padder (Sec. 1st I. F. Transf.)	
23	Padder (Pri. 2nd I. F. Transf.)	
24	Second I. F. Transformer	32-1929
25	Padder (Sec. 2nd I. F. transf.)	
26	Condenser (250 mfd.)	30-1032
27	Resistor (25,000 ohms)	33-325344
28	Condenser (110 mmfd.)	30-1031
29	Condenser (.01 mfd.)	30-4124
30	Volume Control (350,000 ohms)	33-5139
31	Resistor (20,000 ohms)	33-320334
32	Condenser (.03 mfd.)	30-4443
33	Resistor (32,000 ohms)	33-332434
34	Resistor (20,000 ohms)	33-320334
35	Condenser (.01 mfd.)	30-4124
36	Resistor (600 ohms)	33-1212
37	Resistor (1,000,000 ohms)	33-510344
38	Resistor (250,000 ohms)	33-424344
39	Condenser (250 mmfd.)	30-1032
40	Condenser (.01 mfd.)	30-4145
41	Resistor (500,000 ohms)	33-449344
42	Resistor (250,000 ohms)	33-424344
43	Choke	32-1382
44	Condenser (4000 mmfd.)	30-4185
45	Output Transformer	2598
46	Cone and Voice Coil	36-3159
47	Field Coil Assembly	02795
48	Condenser (250 mmfd.)	30-1032
49	Condenser (.01 mfd.)	30-4051
50	Condenser (.01 mfd.)	30-4051
51	On and Off Switch	42-5423
52	Pilot Lamp	34-2039
53	Condenser (250 mmfd.)	30-1032
54	"A" Choke	32-1644
55	Condenser (250 mmfd.)	30-1032
56	Filament Choke	32-1930
57	Vibrator Choke	32-1933
58	Condenser (.5 mfd.)	30-4047
59	Vibrator	38-5036
60	Condenser (.5 mfd.)	30-4047
61	Condenser (.02 mfd.)	30-4039
62	Resistor (300 ohms)	33-3130
63	Resistor (200 ohms)	33-1210
64	Condenser (1250 mmfd.)	5886
65	Power Transformer	32-7488
66	Condenser (.01 mfd.)	30-4381
67	"B" Filter Choke	32-7491
68	Condenser (4-8 mfd.)	38-7693
69	Condenser (250 mmfd.)	30-1032
70	"B" Choke	32-1932
71	"A" Choke	32-1464
	Four Prong Socket	27-6044
	Five Prong Socket	27-6035
	Six Prong Socket	27-6036
	Seven Prong Socket	27-6037
	Tone Control Knob	27-4208
	Face Assembly	28-3786
	Glass	27-7757
	Glass Gasket	27-8206
	Tuning and Volume Shaft	28-8497
	Pointer	28-3505
	Pilot Lamp Assembly	38-7217
	Antenna Shielded Loom	L-1963
	Fuse Lead	38-6595
	Interference Condenser	30-4007
	Interference Condenser	30-4381

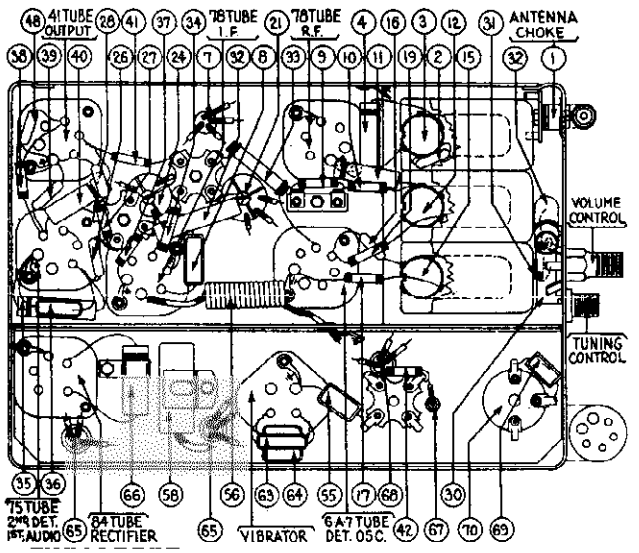

FIGURE 4

No.	Description	Part No.
	Interference Condenser	30-4307
	Interference Condenser	30-4387
	Interference Condenser	30-4404
	Fuse	7227
	Fuse Insulator	27-7729
	Clamp (control mtg.)	29-2699
	Wing Nut (control mtg.)	W-1321
	Screw (Rec. mtg.)	W-1614
	Plate (Rec. mtg.)	29-3734
	Stud (Speaker mtg.)	28-6037
	Washer (Speaker mtg.)	4486
	Nut (Speaker mtg.)	W-55A

© John F. Rider, Publisher

MODEL LT14X3 Lincoln Socket, Trimmers Alignment

PHILCO RADIO & TELEV. CORP.

LINCOLN CUSTOM BUILT CAR RADIO

I. F. Transformers and Padders Model LT14X3

The I. F. transformers are assembled complete with padding condensers.

Both the primary and the secondary padders are placed side by side in the top of the transformer shield can. The adjusting screws are accessible thru the holes in the top of the shield. (See Fig. 2).

The coil windings terminate in leads instead of terminals or lugs. The color scheme of the leads is given in Fig. 1.

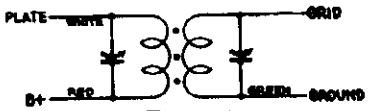

FIGURE 1

If replacements are ever necessary, replace the entire coil assembly, 32-1928 for the first I. F. stage and 32-1929 for the second I. F. stage. Neither the coil nor the padders will be furnished separately. Order only by the above numbers.

Model LT14X3 Adjustments

All padding adjustments are carefully made at the factory and ordinarily no readjustments are necessary. However, when readjustments to the Model LT14X3 are required, the procedure given below must be followed in detail.

Equipment

Fully charged heavy duty storage battery or 6-volt power pack, 048A Philco Set Tester, 3164 Padding wrench, 27-7159 Padding screw driver.

General

OUTPUT METER — The output meter must be connected by means of an adapter to the plate of the type 41 output tube and to the Receiver chassis.

SIGNAL GENERATOR — With the Receiver and signal generator set up for operation at the prescribed frequency, turn the Receiver volume control on full and set the signal generator attenuator so that a half scale reading is obtained on the output meter. The signal in the speaker should be audible but not loud.

The shielding on the signal generator output lead must be connected to the Receiver housing.

The tone control should be turned to the brilliant position.

Remove the cover from the Receiver. The antenna lead must be disconnected.

I. F. — Adjust the signal generator to exactly 260 K. C. Connect the generator lead to the grid cap of the 78 I. F. tube in series with a .1 mfd. condenser.

Adjust the secondary screw padder (25) on the second I. F. transformer for maximum reading on the output meter. Then adjust the primary screw padder (23) for maximum reading. (See Fig. 2 for location of padders).

Remove the generator lead from the 78 tube.

Connect the generator lead to the grid cap of the 6A7 tube in series with a .1 mfd. condenser. Adjust the secondary screw padder (20) on the first I. F. transformer for maximum reading on the output meter. Then adjust the primary screw padder (21) for maximum reading. (See Figure 2 for location of padders).

HIGH FREQUENCY AND R. F. — After padding the first I. F. stage remove the generator lead from the 6A7 tube. Adjust the signal generator to 1600 K. C. and then connect the generator lead to the grid cap of the 78 R. F. tube in series with a .1 mfd. condenser.

Turn the tuning condenser plates out of mesh as far as they will go. With the tuning condenser in this position, adjust the high frequency padder (14) and the R. F. padder (13) until the maximum reading is obtained on the output meter. This is the true setting for 1600 K. C., 160 on the dial scale.

LOW FREQUENCY — Turn the tuning condenser plates in mesh to approximately 580 K. C., 58 on the dial scale and adjust the signal generator to 580 K. C. Roll the tuning condenser and adjust the low frequency padder (16) for maximum reading on the output meter.

HIGH FREQUENCY RE-ADJUSTMENT — Turn the tuning condenser plates out of mesh as far as they will go and adjust the signal generator to 1600 K. C. Then adjust the high frequency padder (14) again for maximum reading on the output meter.

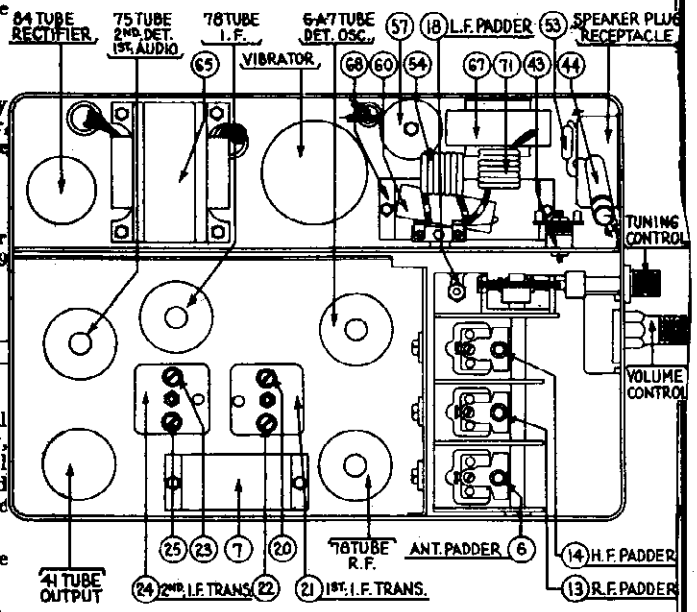

FIGURE 2

ANTENNA — Connect the generator lead to the antenna cable assembly (made up of Part No. L1963 loom, 1-27-7133 terminal and 64 inches of 16 strand No. 30 wire), using a 530 mmfd. condenser in series between the two leads. Plug the cable into the antenna socket.

Turn the tuning condenser to 1400 K. C. and set the generator at 1400 K. C. Adjust the padders (13) and (6) for the maximum reading on the output meter.

When the antenna stage adjustment is made with the Receiver installed in the car, the Receiver antenna lead must be connected to the car antenna in the usual manner. Connect the signal generator output lead to a wire placed near the car antenna but not connected to it.

If this procedure has been carefully followed and an accurately calibrated oscillator or signal generator has been used, the Receiver will be adjusted properly.

©John F. Rider, Publisher

Schematic, Chassis Parts

PHILCO RADIO & TELEV. CORP.

MODELS NT15, NT15X
Nash, Lafayette

NASH - PHILCO MODEL NT15 SINGLE UNIT RECEIVER

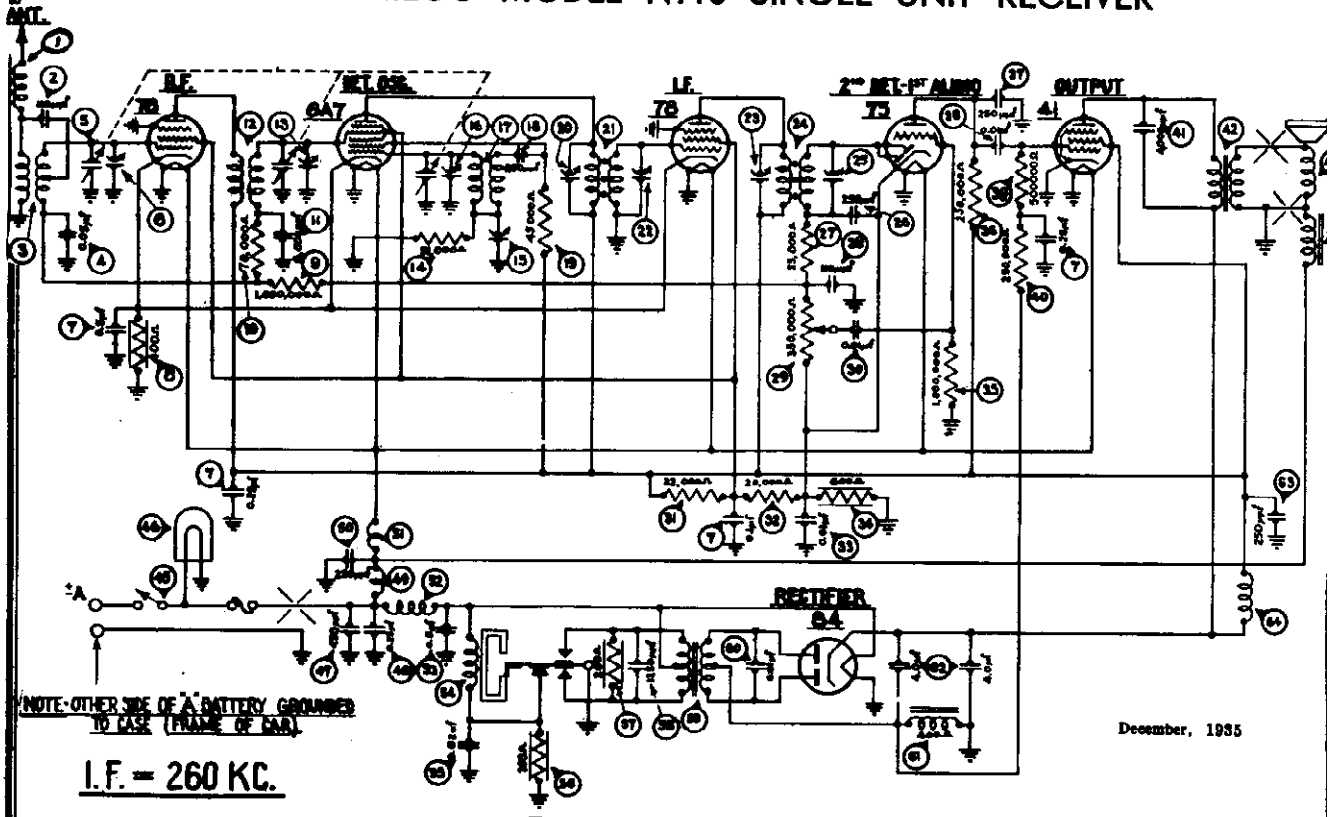

FIGURE 3 *Model NT15 Schematic*

The Model NT15 Receiver (Nash—AC1989) is made for the Nash 400 and Lafayette 3610 cars using the Nash under-car Ant

Model NT15X Parts List

①	Antenna Choke	38-7210	
②	Condenser (110 mmfd.)	30-1031	
③	Antenna Transformer	32-1934	
④	Condenser (.05 mfd.)	30-4020	
⑤	Tuning Condenser	31-1674	
⑥	First Padder (on tun. cond.)		
⑦	Condenser (.1-.25-.25-.5 mfd.)	30-4374	
⑧	Resistor (400 ohms)	33-1211	
⑨	Resistor (1,000,000 ohms)	33-510344	
⑩	Resistor (70,000 ohms)	33-370344	
⑪	Condenser (6000 mmfd.)	30-4125	
⑫	R. F. Transformer	32-1926	
⑬	Second Padder (on tun. cond.)		
⑭	Resistor (51,000 ohms)	33-351344	
⑮	Low Frequency Padder	31-6056	
⑯	Third Padder (on tun. cond.)		
⑰	Oscillator Transformer	32-1927	
⑱	Condenser (250 mmfd.)	30-1032	
⑲	Resistor (45,000 ohms)	33-345344	
⑳	Padder (Pri. 1st I. F. Trans.)		
㉑	First I. F. Transformer	32-1928	
㉒	Padder (Sec. 1st I. F. Trans.)		
㉓	Padder (Pri. 2nd I. F. Trans.)		
㉔	Second I. F. Transformer	32-1929	
㉕	Padder (Sec. 2nd I. F. Trans.)		
㉖	Condenser (250 mmfd.)	30-1032	
㉗	Resistor (25,000 ohms)	33-325344	
㉘	Condenser (110 mmfd.)	30-1031	
㉙	Volume Control (350,000 ohms)	33-5139	
㉚	Condenser (.01 mfd.)	30-4124	
㉛	Resistor (32,000 ohms)	33-332433	
㉜	Resistor (20,000 ohms)	33-320333	
㉝	Condenser (.01 mfd.)	30-4124	
㉞	Resistor (600 ohms)	33-1212	
㉟	Resistor (1,000,000 ohms)	33-510344	
㊱	Resistor (250,000 ohms)	33-424344	
㊲	Condenser (250 mmfd.)	30-1032	
㊳	Condenser (.01 mfd.)	30-4145	
㊴	Resistor (500,000 ohms)	33-440344	
㊵	Resistor (250,000 ohms)	33-424344	
㊶	Condenser (4,000 mmfd.)	30-4185	
㊷	Output Transformer	32-7495	
㊸	Cone and Voice Coil	36-3526	
㊹	Field Coil Assembly	32-9236	
㊺	On and Off Switch	42-5466	
㊻	Pilot Lamp	34-2040	
㊼	Condenser (450 mmfd.)	31-6065	
㊽	Condenser (.25 mfd.)	30-4146	
㊾	"A" Choke	32-1644	
㊿	Condenser (250 mmfd.)	30-1032	
(51)	Filament Choke	32-1464	
(52)	Vibrator Choke	32-1908	
(53)	Condenser (.5 mfd.)	30-4047	
(54)	Vibrator Unit	38-5036	
(55)	Condenser (.02 mfd.)	30-4039	
(56)	Resistor (300 ohms)	33-3130	
(57)	Resistor (200 ohms)	33-1210	
(58)	Condenser (1250 mmfd.)	5886	
(59)	Power Transformer	32-7482	
(60)	Condenser (.01 mfd.)	30-4381	
(61)	Filter Choke	32-7491	
(62)	Filter Condenser (4-4 mfd.)	30-2145	
(63)	Condenser (250 mmfd.)	30-1032	
(64)	"B" Choke	32-1932	
	Four Hole Socket	27-6044	
	Five Hole Socket	27-6035	
	Six Hole Socket	27-6036	
	Seven Hole Socket	27-6037	
	Distributor Resistor	4651	
	Interference Condenser (.5 mfd.)	30-4007	
	Dial Assembly	27-5152	
	Knob (Tun and Vol.)	27-4258	
	Tuning Shaft	28-8452	
	Volume Shaft	28-8453	
	Fuse	7227	
	Fuse Insulator	27-7729	
	Tee Bolt (Rec. Mtg.)	28-6161	
	Nuts (Rec. Mtg.)	W518A	
	Speaker Mtg. Clamp	29-3131	
	Speaker Cable Assembly	41-3180	

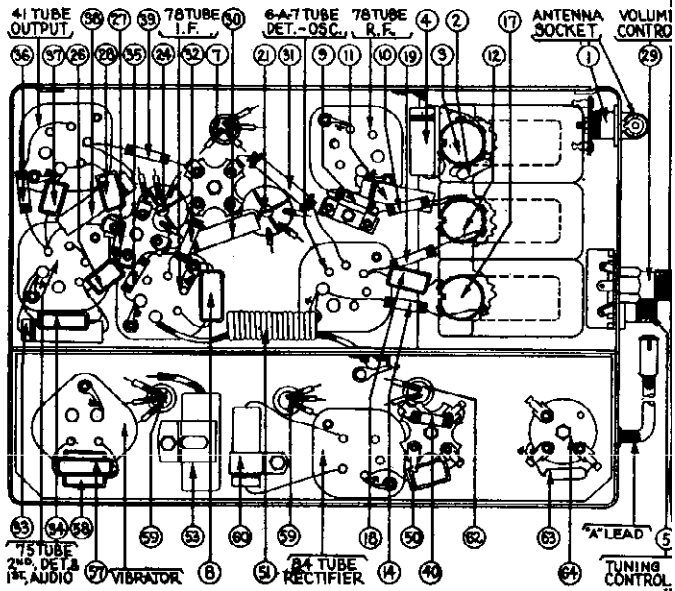

FIGURE 4 *Model NT15 Base View*

©John F. Rider, Publisher

MODELS NT15,NT15X
Nash,Lafayette

PHILCO RADIO & TELEV. CORP.

Socket,Trimmers
Alignment

I. F. Transformers and Padders

The I. F. transformers are assembled complete with padding condensers.

Both the primary and the secondary padders are placed side by side in the top of the transformer shield can. The adjusting screws are accessible thru the holes in the top of the shield. (See Figure 6).

The coil windings terminate in leads instead of terminals or lugs. The color scheme of the leads is given in Figure 5.

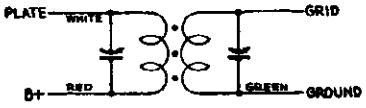

FIGURE 5

If replacements are ever necessary, replace the entire coil assembly, 32-1928 for the first I. F. stage and 32-1929 for the second I. F. stage. Neither the coil nor the padders will be furnished separately. Order only by the above numbers.

Model NT15 Adjustments

All padding adjustments are carefully made at the factory and ordinarily no readjustments are necessary. However, when readjustments to the Model NT15 are required, the procedure given below must be followed in detail.

Equipment

Fully charged heavy duty storage battery or 6-volt power pack, 048A Philco Set Tester, 3164 Padding wrench, 27-7159 Padding screw driver.

General

OUTPUT METER — The output meter must be connected by means of an adapter to the plate of the type 41 output tube and to the Receiver chassis.

SIGNAL GENERATOR — With the Receiver and signal generator set up for operation at the prescribed frequency, turn the Receiver volume control on full and set the signal generator attenuator so that a half scale reading is obtained on the output meter. The signal in the speaker should be audible but not loud.

The shielding on the signal generator output lead must be connected to the Receiver housing.

Procedure

I. F. — Adjust the signal generator to exactly 260 K. C. Connect the generator lead to the grid cap of the 78 I. F. tube in series with a .1 mfd. condenser.

Adjust the secondary screw padder (23) on the second I. F. transformer for maximum reading on the output meter. Then adjust the primary screw padder (22) for maximum reading. (See Figure 6 for location of padders).

Remove the generator lead from the 78 tube.

Connect the generator lead to the grid cap of the 6A7 tube in series with a .1 mfd. condenser. Adjust the secondary screw padder (21) on the first I. F. transformer for maximum reading on the output meter. Then adjust the primary screw padder (20) for maximum reading. (See Figure 6 for location of padders).

HIGH FREQUENCY AND R. F. — After padding the first I. F. stage remove the generator lead from the 6A7 tube.

Adjust the signal generator to 1600 K. C. and then connect the generator lead to the grid cap of the 78 R. F. tube in series with a.1 mfd. condenser.

Turn the tuning condenser plates out of mesh as far as they will go. With the tuning condenser in this position, adjust the high frequency padder (16) and the R. F. padder (13) until the maximum reading is obtained on the output meter. This is the true setting for 1600 K. C., 160 on the dial scale.

LOW FREQUENCY — Turn the tuning condenser plates in mesh to approximately 580 K. C., 58 on the dial scale and adjust the signal generator to the 580 K. C. Roll the tuning condenser and adjust the low frequency padder screw (18) for maximum reading on the output meter.

HIGH FREQUENCY RE-ADJUSTMENT — Turn the tuning condenser plates out of mesh as far as they will go and adjust the signal generator to 1600 K. C. Then adjust the high frequency padder (16) again for maximum reading on the output meter.

ANTENNA — Connect the generator lead to the antenna cable assembly (made up of Part No. L1915 loom, 1-27-7133 terminal and 40 inches of 16 strand No. 30 wire), using a 200 mmfd. condenser in series between the two leads. Plug the cable into the antenna socket.

Turn the tuning condenser to 1400 K. C. and set the generator for 1400 K. C. Adjust the padders (13) and (6) for the maximum reading on the output meter.

When the antenna stage adjustment is made with the Receiver installed in the car, the Receiver antenna lead must be connected to the car antenna in the usual manner. The signal generator output lead should be connected to a wire placed near the car antenna but not connected to it.

If this procedure has been carefully followed and an accurately calibrated oscillator or signal generator has been used, the Receiver will be adjusted properly.

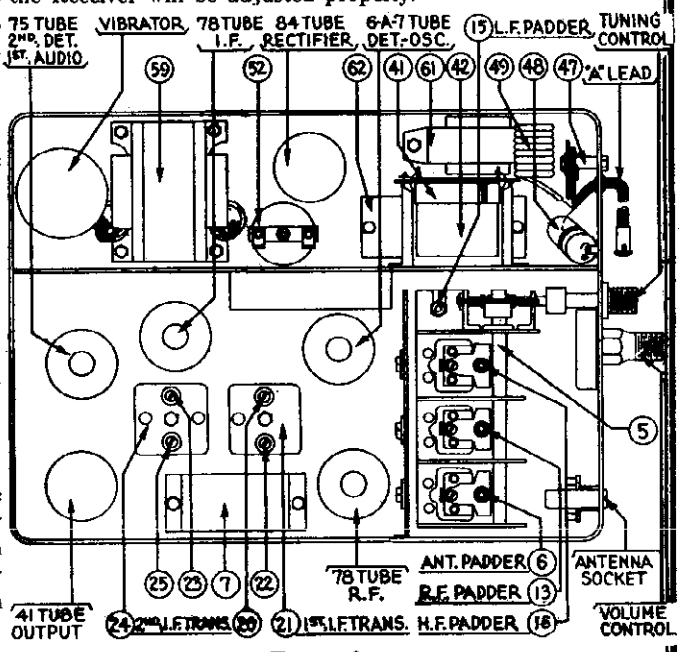

FIGURE 6

The Model NT15 Receiver (Nash — AC1989) is made for the Nash 400 and Lafayette 3610 cars using the Nash under-car Antenna.

©John F. Rider, Publisher

MODEL ST15
Studebaker
Schematic, Chassis
Parts List

PHILCO RADIO & TELEV. CORP.

Studebaker-Philco Model ST15 Single Unit Receiver

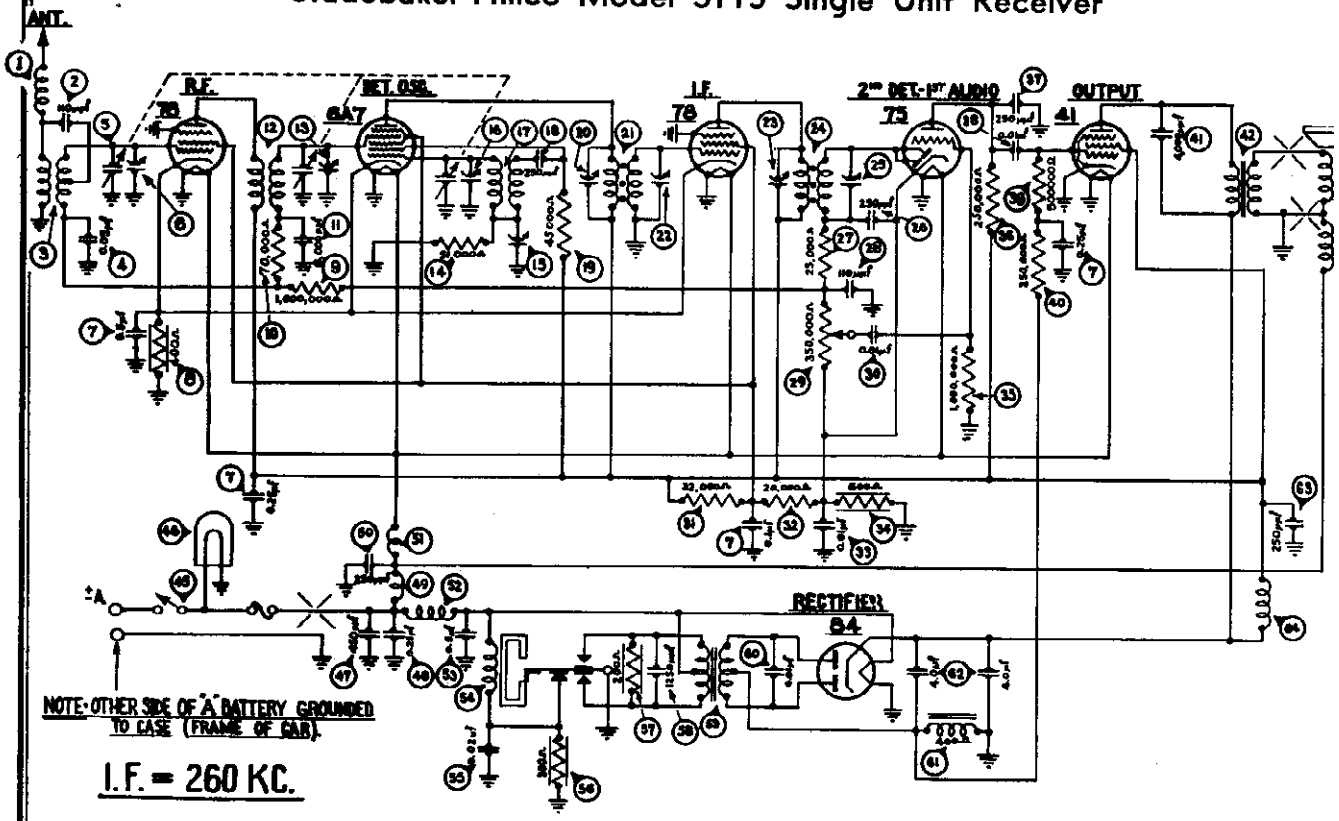

December 15, 1935

Model ST15 Parts List

①	Antenna Choke	38-7210	
②	Condenser (110 mmfd.)	30-1031	
③	Antenna Transformer	32-1934	
④	Condenser (.05 mfd.)	30-4020	
⑤	Tuning Condenser	31-1674	
⑥	First Padder (on tun. cond.)		
⑦	Condenser (.1-.25-.25-.5 mfd.)	30-4374	
⑧	Resistor (400 ohms)	33-1211	
⑨	Resistor (1,000,000 ohms)	33-510344	
⑩	Resistor (70,000 ohms)	33-370344	
⑪	Condenser (6000 mmfd.)	30-4125	
⑫	R. F. Transformer	32-1926	
⑬	Second Padder (on tun. cond.)		
⑭	Resistor (51,000 ohms)	33-351344	
⑮	Low Frequency Padder	31-4056	
⑯	Third Padder (on tun. cond.)		
⑰	Oscillator Transformer	32-1927	
⑱	Condenser (250 mmfd.)	30-1032	
⑲	Resistor (45,000 ohms)	33-345344	
⑳	Padder (Pri. 1st I. F. Trans.)		
㉑	First I. F. Transformer	32-1928	
㉒	Padder (Sec. 1st I. F. Trans.)		
㉓	Padder (Pri. 2nd I. F. Trans.)		
㉔	Second I. F. Transformer	32-1929	
㉕	Padder (Sec. 2nd I. F. Trans.)		
㉖	Condenser (250 mmfd.)	30-1032	
㉗	Resistor (25,000 ohms)	33-325344	
㉘	Condenser (110 mmfd.)	30-1031	
㉙	Volume Control (350,000 ohms)	33-5139	
㉚	Condenser (.01 mfd.)	30-4124	
㉛	Resistor (32,000 ohms)	33-332433	
㉜	Resistor (20,000 ohms)	33-320333	
㉝	Condenser (.01 mfd.)	30-4124	
㉞	Resistor (600 ohms)	33-1212	
㉟	Resistor (1,000,000 ohms)	33-510344	
㊱	Resistor (250,000 ohms)	33-424344	
㊲	Condenser (250 mmfd.)	30-1032	
㊳	Condenser (.01 mfd.)	30-4145	
㊴	Resistor (500,000 ohms)	33-449344	
㊵	Resistor (250,000 ohms)	33-424344	
㊶	Condenser (4,000 mmfd.)	30-4185	
㊷	Output Transformer	32-7495	
㊸	Cone and Voice Coil	36-3526	
㊹	Field Coil Assembly	32-9236	
㊺	On and Off Switch	42-1157	
㊻	Pilot Lamp	34-2039	
㊼	Condenser (450 mmfd.)	31-6065	
㊽	Condenser (.25 mfd.)	30-4146	
㊾	"A" Choke	32-1644	
㊿	Condenser (250 mmfd.)	30-1032	
(51)	Filament Choke	32-1464	
(52)	Vibrator Choke	32-1968	
(53)	Condenser (.5 mfd.)	30-4047	
(54)	Vibrator Unit	38-5036	
(55)	Condenser (.02 mfd.)	30-4039	
(56)	Resistor (300 ohms)	33-3130	
(57)	Resistor (200 ohms)	33-1210	
(58)	Condenser (1250 mmfd.)	5886	
(59)	Power Transformer	32-7482	
(60)	Condenser (.01 mfd.)	30-4381	
(61)	Filter Choke	32-7491	
(62)	Filter Condenser (4-4 mfd.)	30-2145	
(63)	Condenser (250 mmfd.)	30-1032	
(64)	"B" Choke	32-1932	
	Four Hole Socket	27-6044	
	Five Hole Socket	27-6035	
	Six Hole Socket	27-6036	
	Seven Hole Socket	27-6037	
	Distributor Resistor	4851	
	Interference Condenser (.5 mfd.)	30-4007	
	Clamp (Cont. Mtg.)	23-3403	
	Dial Assembly (Dictator)	42-5445	
	Dial Assembly (President)	42-5449	
	Knob (Tun. & Vol.)	27-4254	
	Pointer (Dictator)	28-3461	
	Pointer (President)	28-3462	
	Tuning Shaft	28-8442	
	Volume Shaft	28-8443	
	Fuse	7227	
	Fuse Insulator	27-7729	

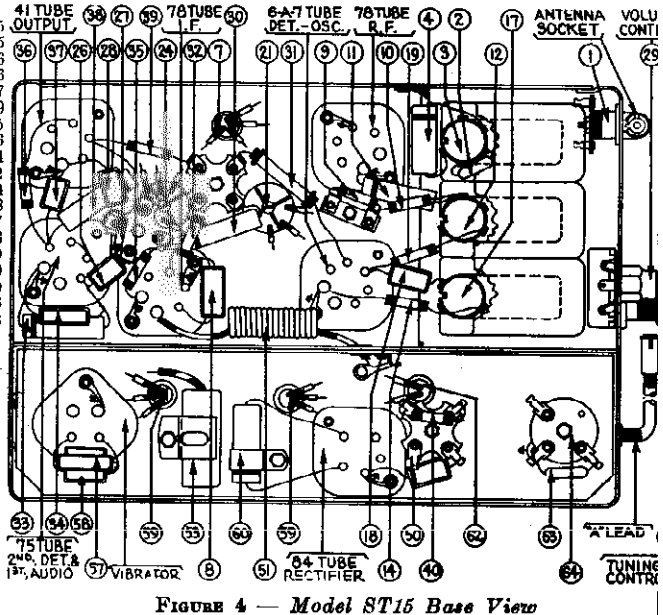

FIGURE 4 — *Model ST15 Base View*

	Tee Bolt (Rec. Mtg.)	28-6161	Speaker Mtg. Clamp 29-3131
	Nuts (Rec. Mtg.)	W518A	Speaker Cable Assembly 41-3180

©John F. Rider, Publisher

MODEL ST15
Studebaker
Socket, Trimmers
Alignment

PHILCO RADIO & TELEV. CORP.

I. F. Transformers and Padders Model ST15

The I. F. transformers are assembled complete with padding condensers.

Both the primary and the secondary padders are placed side by side in the top of the transformer shield can. The adjusting screws are accessible thru the holes in the top of the shield. (See Figure 6).

The coil windings terminate in leads instead of terminals or lugs. The color scheme of the leads is given in Figure 5.

FIGURE 5

If replacements are ever necessary, replace the entire coil assembly, 32-1928 for the first I. F. stage and 32-1929 for the second I. F. stage. Neither the coil nor the padders will be furnished separately. Order only by the above numbers.

Model ST15 Adjustments

All padding adjustments are carefully made at the factory and ordinarily no readjustments are necessary. However, when readjustments to the Model ST15 are required, the procedure given below must be followed in detail.

Equipment

Fully charged heavy duty storage battery or 6-volt power pack, 048A Philco Set Tester, 3164 Padding wrench, 27-7159 Padding screw driver.

General

OUTPUT METER — The output meter must be connected by means of an adapter to the plate of the type 41 output tube and to the Receiver chassis.

SIGNAL GENERATOR — With the Receiver and signal generator set up for operation at the prescribed frequency, turn the Receiver volume control on full and set the signal generator attenuator so that a half scale reading is obtained on the output meter. The signal in the speaker should be audible but not loud.

The shielding on the signal generator output lead must be connected to the Receiver housing.

Procedure

I. F. — Adjust the signal generator to exactly 260 K. C. Connect the generator lead to the grid cap of the 78 I. F. tube in series with a .1 mfd. condenser.

Adjust the secondary screw padder (25) on the second I. F. transformer for maximum reading on the output meter. Then adjust the primary screw padder (23) for maximum reading. (See Figure 6 for location of padders).

Remove the generator lead from the 78 tube.

Connect the generator lead to the grid cap of the 6A7 tube in series with a .1 mfd. condenser. adjust the secondary screw padder (22) on the first I. F. transformer for maximum reading on the output meter. Then adjust the primary screw padder (21) for maximum reading. (See Figure 6 for location of padders).

HIGH FREQUENCY AND R. F. — After padding the first I. F. stage remove the generator lead from the 6A7 tube.

Adjust the signal generator to 1600 K. C. and then connect the generator lead to the grid cap of the 78 R. F. tube in series with a .1 mfd. condenser.

Turn the tuning condenser plates out of mesh as far as they will go. With the tuning condenser in this position, adjust the high frequency padder (16) and the R. F. padder (13) until the maximum reading is obtained on the output meter. This is the true setting for 1600 K. C., 160 on the dial scale.

LOW FREQUENCY — Turn the tuning condenser plates in mesh to approximately 580 K. C., 58 on the dial scale and adjust the signal generator to the 580 K. C. Roll the tuning condenser and adjust the low frequency padder screw (15) for maximum reading on the output meter.

HIGH FREQUENCY RE-ADJUSTMENT — Turn the tuning condenser plates out of mesh as far as they will go and adjust the signal generator to 1600 K. C. Then adjust the high frequency padder (16) again for maximum reading on the output meter.

ANTENNA — Connect the generator lead to the antenna cable assembly (made up of Part No. L1915 loom, 1-27-7133 terminal and 40 inches of 16 strand No. 30 wire), using a 200 mmfd. condenser in series between the two leads. Plug the cable into the antenna socket.

Turn the tuning condenser to 1400 K. C. and set the generator for 1400 K. C. Adjust the padders (13) and (6) for the maximum reading on the output meter.

When the antenna stage adjustment is made with the Receiver installed in the car, the Receiver antenna lead must be connected to the car antenna in the usual manner. The signal generator output lead should be connected to a wire placed near the car antenna but not connected to it.

If this procedure has been carefully followed and an accurately calibrated oscillator or signal generator has been used, the Receiver will be adjusted properly.

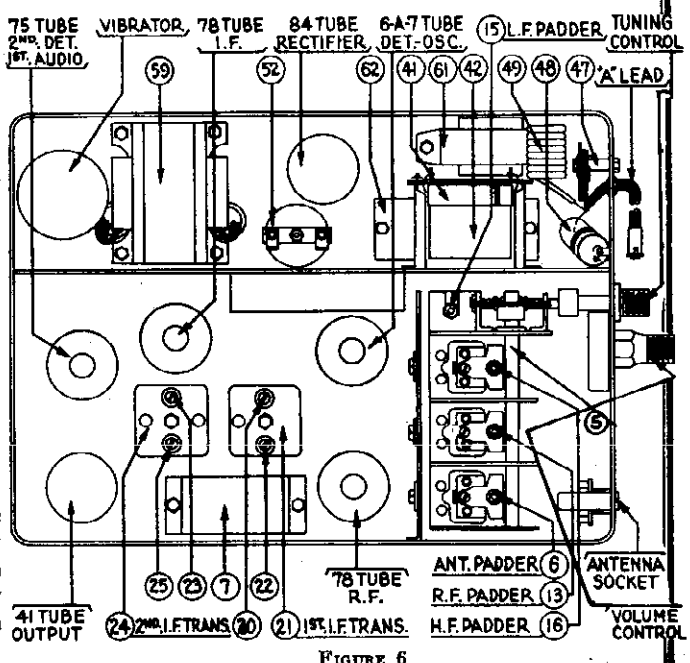

FIGURE 6

©John F. Rider, Publisher

PHILCO RADIO & TELEV. CORP.

MODEL 37-33
Schematic
Trimmers, Parts

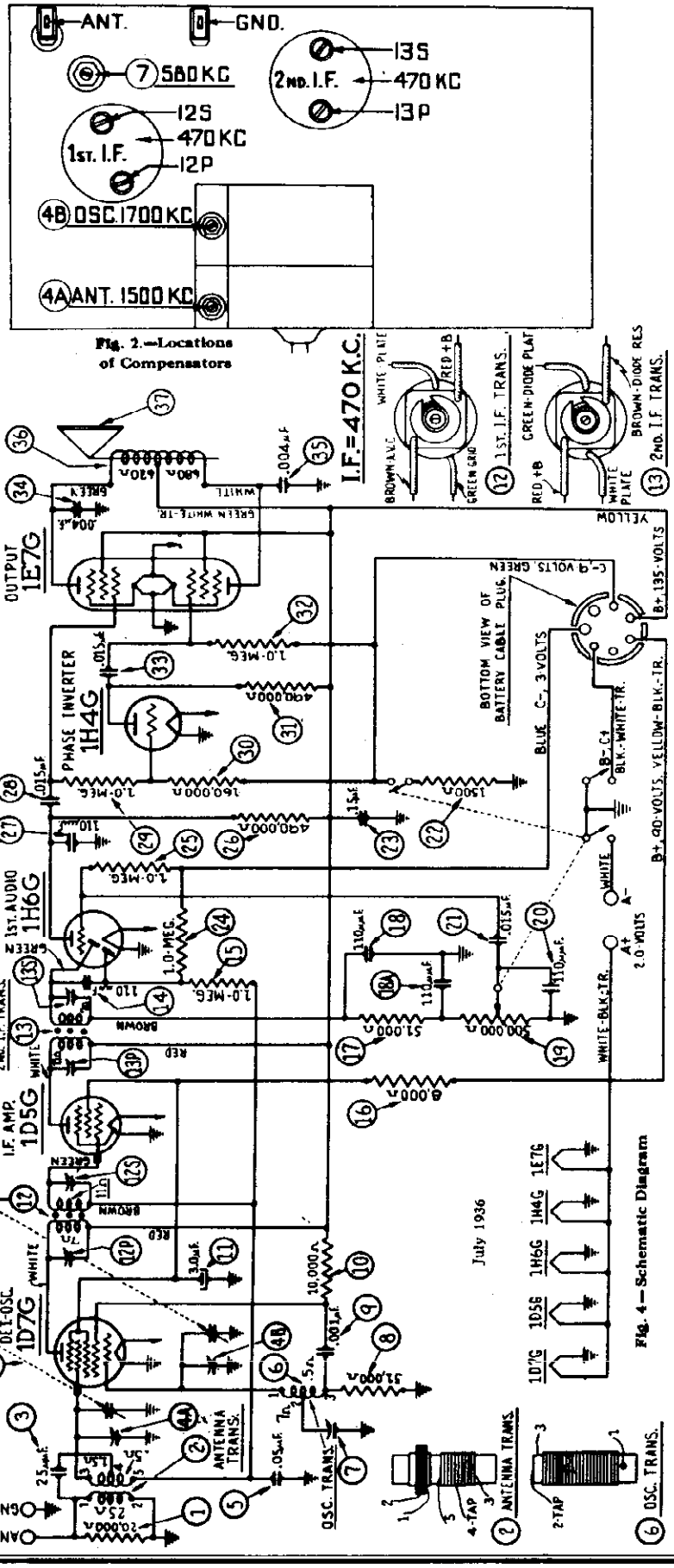

Fig. 2.—Locations of Compensators

Fig. 4—Schematic Diagram

Replacement Parts

Schem. No.	Description	Part No.	List Price
1	Resistor (20,000 ohms, ½ watt)	33-320339	$0.20
2	Transformer, Antenna	32-2212	1.20
3	Condenser (25 mmfd., mica)	30-1067	.20
4	Tuning Condenser	31-1902	3.00
5	Condenser, Tubular (.05 mfd.)	30-4444	.20
6	Oscillator Transformer	32-2213	.55
7	Compensator (580 K.C.)	040008	.35
8	Resistor (51,000 ohms)	33-351339	.20
9	Condenser (.001 mfd., tubular)	30-4201	.20
10	Resistor (10,000 ohm, ½ watt)	33-310339	.20
11	Electrolytic Condenser (3 mfd.)	30-2158	.90
12	1st I. F. Transformer	32-2100	1.50
13	2d I. F. Transformer	32-2102	1.50
14	Condenser (110 mmfd., mica)	30-1031	.20
15	Resistor (1 megohm, ½ watt)	33-510339	.20
16	Resistor (8,000 ohm, ½ watt)	33-280339	.20
17	Resistor (51,000 ohm, ½ watt)	33-351339	.20
18	Condenser (110 mmfd., double bakelite)	8035DG	.25
19	Volume Control & Power Switch	33-5169	1.45
20	Condenser (110 mmfd., mica)	30-1031	.20
21	Condenser (.015 mfd.)	3793SU	.35
22	Resistor (1,500 ohm, ½ watt)	33-215339	.20
23	Condenser (.15 mfd., tubular)	30-4191	.25
24	Resistor (1 megohm, ½ watt)	33-510339	.20
25	Resistor (1 megohm, ½ watt)	33-510339	.20
26	Resistor (490,000 ohm, ½ watt)	33-449339	.20
27	Condenser (110 mmfd., mica)	30-1031	$0.20
28	Condenser (.015 mfd., bakelite)	3793SU	.35
29	Resistor (1 megohm, ½ watt)	33-510339	.20
30	Resistor (160,000 ohm, ½ watt)	33-416339	.20
31	Resistor (490,000 ohm, ½ watt)	33-449339	.20
32	Resistor (1 megohm, ½ watt)	33-510339	.20
33	Condenser (.015 mfd., bakelite)	3793SU	.35
34	Condenser (.004 mfd., tubular)	30-4185	.25
35	Condenser (.004 mfd., tubular)	30-4185	.25
36	Speaker L2B, B and F Cabinets	36-1256	6.50
37	Cone Assembly	45-2315	
	Dial	27-5243	.15
	Pointer	27-7933	.01
	Felt Washer	27-7897	.50 C
	Knob Assembly	27-4282	.10
	Vernier Drive	31-1925	
	Pilot Lamp	5316	.23
	Pilot Lamp Assembly	38-7964	.45
	Cable Assembly	41-3203	1.40
	Clamp	28-2345	.60 C
	Terminal Panel R.F.	38-7963	.05
	Spacers	28-4001	.25 C
	Washers	W-442	.20 C
	Mounting Plate (Coil)	28-3808	.02
	Spacer	27-8228	.01
	Screw	W-1635	.30 C
	Socket—7 prong	27-6057	$0.11
	Socket—8 prong	27-6058	.11
	Shield Base	28-3898	.03
	Shield	28-2726	.10
	Fahnstock Clip	L-1126	1.25 C
	Washer	4243	.01
	Washer	27-7414	.70 C
	Lugs	L-1125	.75 C
	B Battery	41-8007	
	A Battery (Wet)	172R	
	A Battery (Dry)	41-8011	
	Ballast Lamp	1Y1	
	Mounting Screw (Chassis)	W-567	3.00 C
	Mounting Washer (Chassis)	W-315	.50 C
	Mounting Nut (Chassis)	W-124	.35 C
	Mounting Bolt (Speaker)	W-1604	.50 C
	Nut (Speaker)	W-124	.35 C

B CABINET

Baffle Silk Assembly	40-5988	.30

F CABINET

Baffle Silk Assembly	40-5933	.75
Bottom Shield	27-8440	.02

Figures in black type indicate circled figures in base view

Prices Subject to Change Without Notice

©John F. Rider, Publisher

MODEL 808
Chassis

PHILCO RADIO & TELEV. CORP.

MODEL 37-33
Socket, Chassis
Alignment, Voltage

Electrical Specifications

Type Circuit: Superheterodyne, with push-pull pentode audio output, battery operated.

Batteries Required:
"A" supply— **Philco 172R** 2 volt storage battery or a dry **A battery Philco Part No. 41-8011.** If a dry A supply is used, a ballast lamp **(Philco Part No. 1Y1)** must be inserted in the socket provided in the dry A battery **Part No. 41-8011.** This lamp acts as a voltage regulator, and maintains a constant potential of two volts on the filaments of the receiver tubes.

"BC" supply—Philco battery Part No. 41-8007 is used to supply B and C voltages. This battery contains a socket into which the receiver battery cable plug is inserted.

Current Drain: A Battery, 540MA. B Battery, 13MA.

Philco Tubes Used: 1D7G, Detector Oscillator; 1D5G, I.F. Amplifier; 1H6G, 2nd Detector, 1st audio; 1H4G, Phase inverter; and 1E7G, Output.

Frequency Range: 530-1720 K.C.

Intermediate Frequency: 470 K.C.

Speaker: Permanent Magnet Model L2B.

Aligning Compensators

To accurately adjust this receiver precision test equipment is necessary. A signal generator such as the **Philco Model 088,** covering from 110 to 20,000 K.C. is recommended for adjusting the various compensators at the frequencies specified. A visual indication of the receiver output is also necessary, **Philco Model 025 Circuit Tester** contains a sensitive output meter and is recommended for this purpose.

Philco fibre handle screw-driver **No. 27-7059** and wrench **Part No. 3164** complete the equipment necessary for the following adjustments. The locations of the various compensators are shown in Fig. (2).

OUTPUT METER—The 025 Output Meter is connected between one of the plate contacts of the 1E7G tube and ground. Adjust the meter to use the (0-30) volt scale.

INTERMEDIATE FREQUENCY CIRCUIT

Frequency 470 K. C.

1. Connect the 088 Signal Generator output lead through a .1 mfd. condenser to the control grid of the 1C7G tube; and the ground connection of the output lead to the chassis. Then turn the tuning condenser to approximately 580 K.C. and adjust the signal generator for 470 K.C.

2. Now adjust compensators ⑯s, 2nd I. F. Sec., ⑯p 2nd I. F. Pri., ⑮s 1st I. F. Sec., and ⑮p 1st I. F. Pri. for maximum output.

RADIO FREQUENCY CIRCUIT

530 to 1720 K.C.

1. Remove the signal generator output lead from the 1C7G tube and connect it through a 200 mmfd. condenser to the antenna post of the receiver, and the generator ground lead to the chassis.

2. Turn signal generator to 1700 K.C. Rotate receiver tuning condenser to minimum capacity position (clockwise); then place a .006" gauge between the rotor and stator plates (left side of tuning condenser facing front of receiver), and turn condenser until rotor and stator gauge touch gauge. Now remove gauge without disturbing setting of the plates. Compensators ⑭b Osc. and ⑭a Ant. are then adjusted for maximum output.

3. Turn signal generator and receiver dials to 580 K.C. and adjust compensator ⑬ as follows:

First tune compensator ⑬ for maximum output. Then vary the tuning condenser for maximum output. Now retune compensator ⑬ and again vary the tuning condenser back and forth about 580 K.C. for maximum output. This operation of first tuning the compensator, then the tuning condenser is continued until maximum output is obtained at the 580 K.C. frequency.

4. Readjust the 1700 K.C. end of dial as given in paragraph 2 above.

5. Then turn signal generator and receiver dials to 1500 K.C. and adjust compensator ⑫a Ant. for maximum output.

DIAL CALIBRATION—After the above adjustments have been performed, the dial pointer is adjusted to track properly with the tuning condenser. To do this turn signal generator to 1000 K.C. and tune the receiver tuning condenser for maximum output at this frequency. When maximum output is obtained dial pointer is adjusted to the 1000 K.C. mark on dial.

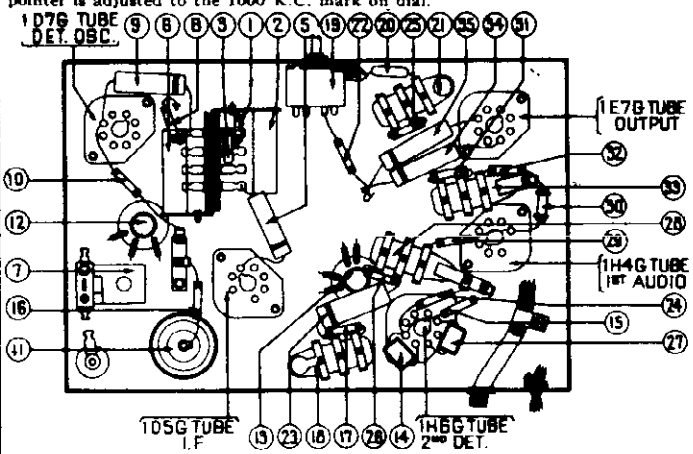

Fig. 3.—Parts Location. Underside of Chassis View

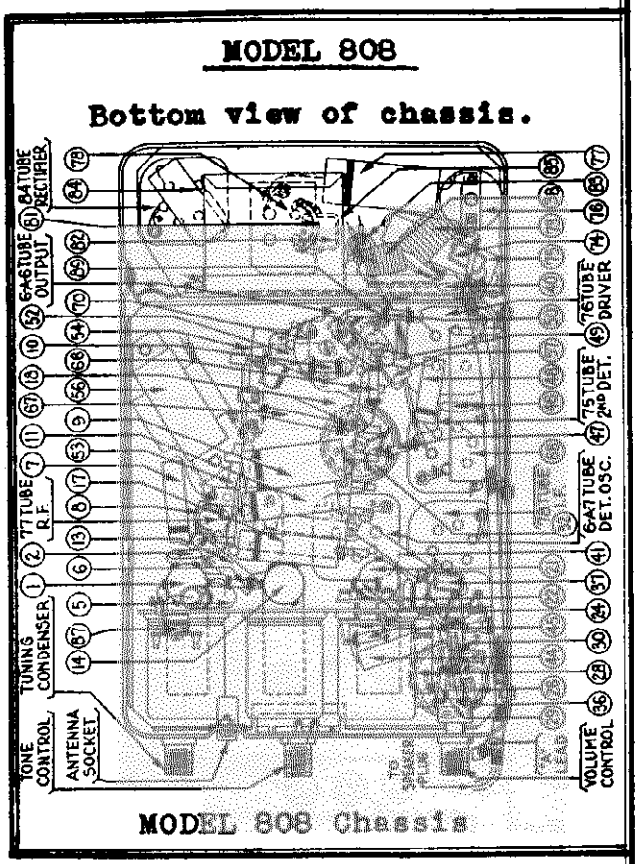

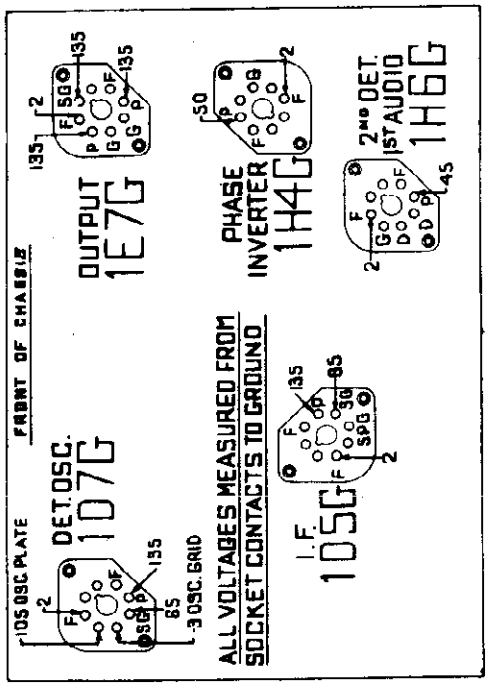

Fig. 1.—View of Sockets from Underside Chassis

The voltages indicated by arrows were measured with a Philco 25 Circuit Tester which contains a voltmeter having a resistance of 1000 ohms per volt. Volume Control at minimum.

©John F. Rider, Publisher

MODEL 37-38
Schematic
Parts, Coils

PHILCO RADIO & TELEV. CORP.

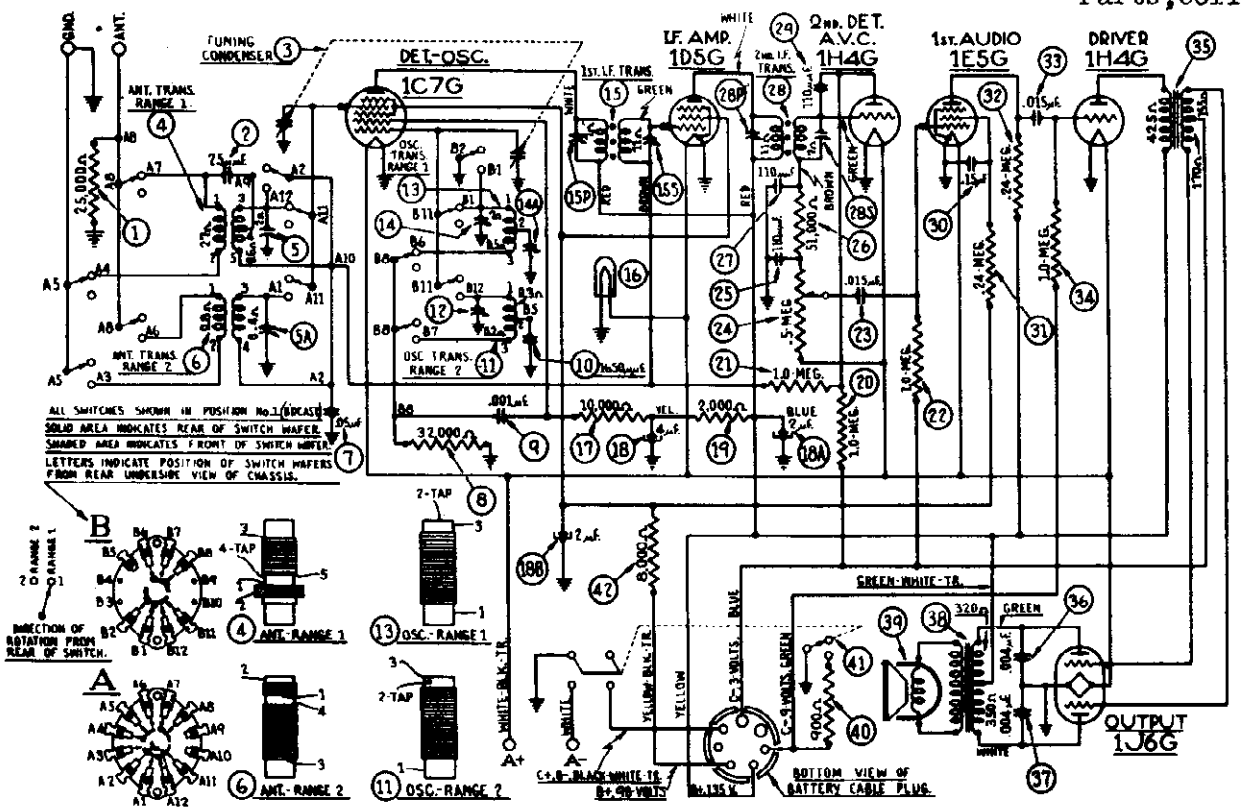

I.F.=470 K.C.

Fig. 5—Schematic Diagram—Model 37-38

July 1936

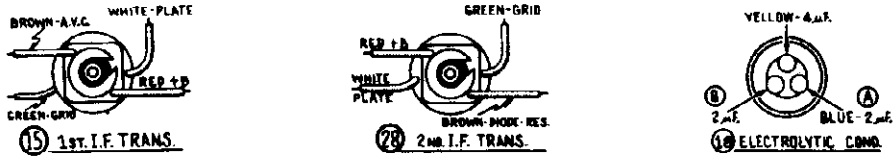

Replacement Parts — Model 37-38

Schem. No.	Description	Part No.	List Price
1	Resistor (25,000 ohm, ½ watt)	33-325339	$0.20
2	Condenser (25 mmfd. mica)	30-1067	.20
3	Tuning Condenser	31-1826	3.00
4	Antenna Transformer (Broadcast)	32-2159	1.20
5	Compensator (Twin)	31-6120	.50
6	Antenna Transformer (Police)	32-2246	.80
7	Condenser (.05 mfd. tubular)	30-4444	.20
8	Resistor (32,000 ohm, ½ watt)	33-332339	.20
9	Condenser (.001 mfd. tubular)	30-4453	.20
10	Condenser (1650 mmfd. semi-fixed)	31-6096	.40
11	Oscillator Transformer (Police)	32-2121	.40
12	Compensator (Single)	31-6101	.20
13	Oscillator Transformer (Broadcast)	32-2120	.65
14	Compensator (Twin)	31-6100	.40
15	1st I.F. Transformer	32-2100	1.50
16	Pilot Lamp	34-2150	.25
17	Resistor (10,000 ohm, ½ watt)	33-310339	.20
18	Electrolytic Condenser (4-2-2 mfd.)	30-2162	1.40
19	Resistor (2,000 ohm, ½ watt)	33-220339	.20
20	Resistor (1 megohm, ½ watt)	33-510339	.20
21	Resistor (1 megohm, ½ watt)	33-510339	.20
22	Resistor (1 megohm, ½ watt)	33-510339	.20
23	Condenser (.015 mfd. tubular)	30-4358	.20
24	Volume Control	33-5165	1.00
25	Condenser (110 mmfd. mica)	30-1031	.20
26	Resistor (51,000 ohm, ½ watt)	33-351339	$0.20
27	Condenser (110 mmfd., mica)	30-1031	.20
28	2d I.F. Transformer	32-2102	1.50
29	Condenser (110 mmfd., mica)	30-1031	.20
30	Condenser (.15 mfd. bakelite)	62879G	.35
31	Resistor (240,000 ohm, ½ watt)	33-424339	.20
32	Resistor (240,000 ohm, ½ watt)	33-424339	.20
33	Condenser (.015 mfd. tubular)	30-4236	.20
34	Resistor (1 megohm, ½ watt)	33-510339	.20
35	Audio Transformer (Interstage)	32-7037	2.00
36	Condenser (.004 mfd. tubular)	30-4456	.20
37	Condenser (.004 mfd. tubular)	30-4456	.20
38	Output Transformer—KR17, HR12	32-7039	1.60
39	Cone Voice Coil—KR17	36-3540	.80
	Cone Voice Coil—HR12	36-3557	1.20
40	Resistor (900 ohm, ½ watt)	33-1223	.20
41	Power Switch	33-5170	1.20
42	Resistor (8,000 ohms, ½ watt)	33-280339	.20
	Range Switch	42-1195	
	Screen Bracket Assembly	31-1878	.25
	Dial	27-5196	.45
	Hub	26-7152	.10
	Clamp	26-2637	.10
	Set Screw	W-1506	2.00 C
	Pilot Lamp Assembly	38-7875	

Description	Part No.	List Price
Pilot Lamp	34-2150	
Vernier Drive	31-1863	.35
Socket—6 prong	27-6058	$0.11
Socket—7 prong	27-6067	.11
Tube Shield	26-2736	.10
Tube Shield Base	26-3806	.08
Volume Control Shaft	33-9058	
Shaft Spring	28-4117	.40 C
Shaft Retaining Clip	28-4304	.01
Mounting Grommet R.F. Unit	27-4317	.04
Mounting Sleeve	26-2367	.01
Washer	W-425	.85 C
Screw	W-720	.45 C
Washer	28-2927	.01
Terminal Panel (I.F. Unit)	38-7703	.25
Spacer	26-4001	.25 C
Cable Assembly (Battery)	41-3198	1.40
A Battery, Wet	172R	
A Battery, Dry	41-2911	
B Battery	41-3007	
Cable (Speaker)	41-3207	.30
Knob, Tuning	27-4321	.10
Knob, Tone and Volume	27-4332	.10
Speaker, KR-17, R. and F. Cabinets	36-1248	10.60
Speaker, HR-12, J. Cabinet	36-1250	11.00

Figures in black type indicate circled figures in Base View.

Prices Subject to Change without Notice.

©John F. Rider, Publisher

©John F. Rider, Publisher

Electrical Specifications

Type Circuit: Superheterodyne, with class "B" audio output, battery operated.

Batteries Required:

"A" supply—**Philco 172R** 2 volt storage battery or a dry A battery Philco Part No. 41-8011. If a dry A supply is used, a ballast lamp Philco type **1F1 must** be inserted in the socket provided in the dry A battery (Part 41-8011). This small lamp acts as a voltage regulator, and maintains a constant potential of two volts on the filaments of the receiver tubes.

"BC" supply—Philco battery Part No. 41-8007 is used to supply B and C voltages. This battery contains a socket into which the receiver battery cable plug is inserted.

Current Drain: A Battery, 720 M. A.; B Battery, 20 M. A.

Philco Tubes Used: 1C7G, Detector Oscillator; 1D5G, I.F. Amplifier; 1H4G, 2nd Detector, A.V.C.; 1E5G, 1st Audio; 1H4G, Driver; 1J6G, Output.

Frequency Range: Range 1, 530-1720 K. C.; Range 2, 2.3-7.4 M. C.

Intermediate Frequency: 470 K. C.

Speaker: KR-17—B, F Cabinets; HR-12—J Cabinet.

Alignment of Compensators

To accurately adjust this receiver, precision test equipment is necessary. A signal generator such as the PHILCO MODEL 088 Signal Generator, covering from 110 to 20,000 K. C. is recommended for use in adjusting the compensators at the various frequencies specified. A visual indication of the receiver output is also necessary to obtain correct adjustment of the compensators. PHILCO MODEL 025 Circuit Tester contains a sensitive output meter and is recommended for these adjustments.

Philco Fibre Wrench No. 3164 and Fibre Handle Screw-Driver No. 27-7059 complete the necessary equipment for these adjustments. The locations of the various compensators are shown in **Figs.** 2 and 3.

The following procedure must be observed in adjusting the compensators:—

DIAL ADJUSTMENT—The tuning condenser is set at the maximum capacity position, by turning the tuning knob clockwise. Loosen the set screw of dial hub and set dial, with Glowing Indicator centered between the first and second index lines at the low frequency end of scale.

OUTPUT METER—The 025 Output Meter is connected between one of the plate prongs of the 1J6G tube and the chassis. Then adjust the meter to use the (0-30) volt scale.

INTERMEDIATE FREQUENCY CIRCUIT

Frequency 470 K. C.

1. Connect the 088 Signal Generator output lead through a .1 mfd. condenser, to the control grid of the 1C7G tube, and the generator ground lead to the chassis.

2. Set the range switch in position No. 1 (Broadcast), then rotate the tuning condenser of the receiver to the maximum capacity position (clockwise) and adjust the signal generator for 470 K. C. Now adjust compensators (28s) 2nd I.F. Sec., (28p) 2nd I.F. Pri., (15s) 1st I.F. Sec. and (15p) 1st I.F. Pri. for maximum output.

RADIO FREQUENCY CIRCUIT

Tuning Range 2.3 M. C. to 7.4 M. C.

1. Remove the signal generator output lead from the grid of the 1C7G tube and connect it through a 200 mmf Condenser to the antenna terminal on input panel (rear of chassis), and the generator ground lead to the ground terminal of this panel.

2. Set the range switch in position No. 2. Turn the receiver and signal generator dials to 7.0 M. C. Now adjust compensator (12) for maximum output.

3. Turn signal generator and receiver dials to 6.0 M. C. and adjust compensator ⑫a for maximum output.

Tuning Range 530 to 1720 K. C.

1. Set range switch in position No. ① (Broadcast). Turn signal generator and receiver dials to 1600 K. C. Then adjust (14) Osc. "Screw", and (5) antenna for maximum output.

2. Turn signal generator and receiver dials to 580 K. C. and adjust compensator (14a) Osc., "nut"—see Fig. 3—as follows: To adjust compensator (14a) the tuning condenser must be rolled for maximum output, thusly: First turn the compensator (14a) for maximum output. Then vary the tuning condenser for maximum output about 580 K. C. Now retune compensator (14a) and again vary the tuning condenser back and forth about the 580 K. C. dial mark for maximum output.

This operation of first tuning the compensator, then the tuning condenser is continued until maximum output is obtained at the 580 K. C. dial mark. If the signal generator is not accurately calibrated the maximum point on the dial of the receiver may fall slightly above or below the 580 K. C. dial mark.

3. Turn signal generator and receiver dials to 1600 K. C. and readjust compensator (14) Osc. "screw" for maximum output.

4. Turn signal generator and receiver dials to 1500 K. C. and readjust compensator (5) for maximum output.

SOCKET VOLTAGES

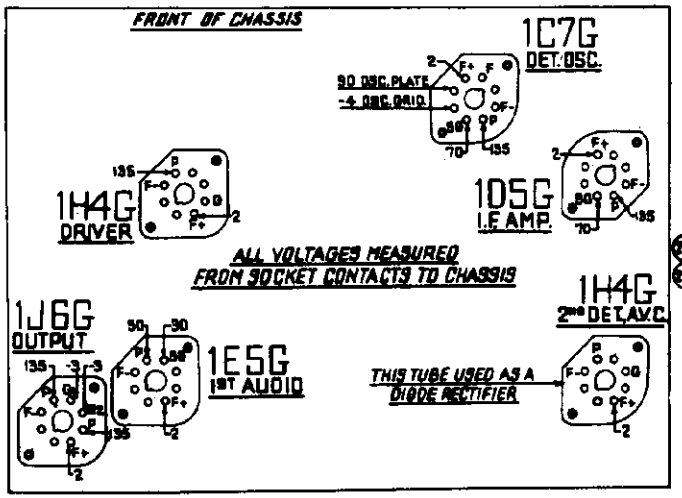

Fig. 1—Socket Voltages—Underside of Chassis View

The voltages indicated by arrows were measured with a **Philco 025 Circuit Tester** which contains a voltmeter having a resistance of 1000 ohms per volt. Volume Control at minimum, range switch in broadcast position.

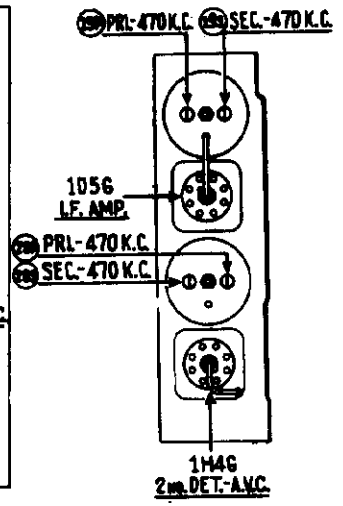

Fig. 2—I.F. Compensators Top of Chassis

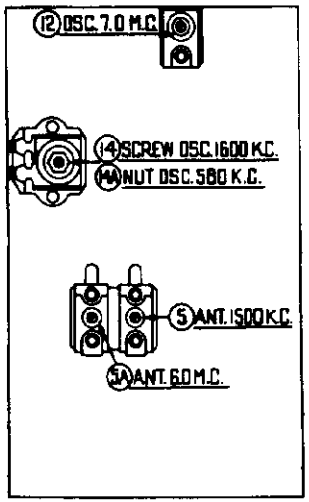

Fig. 3—R.F. Compensators Underside of Chassis

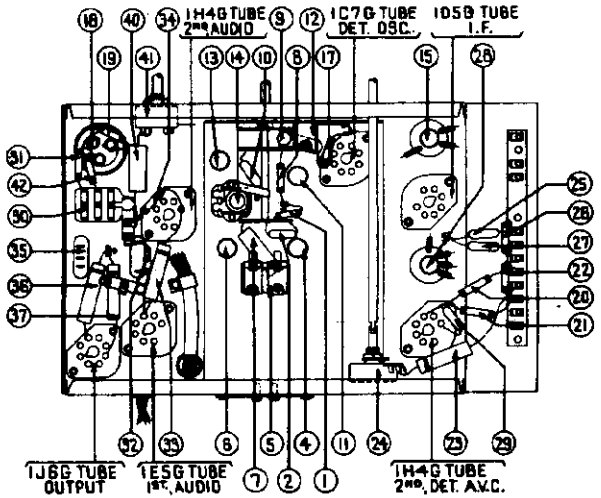

Fig. 4—View of Parts from Underside of Chassis

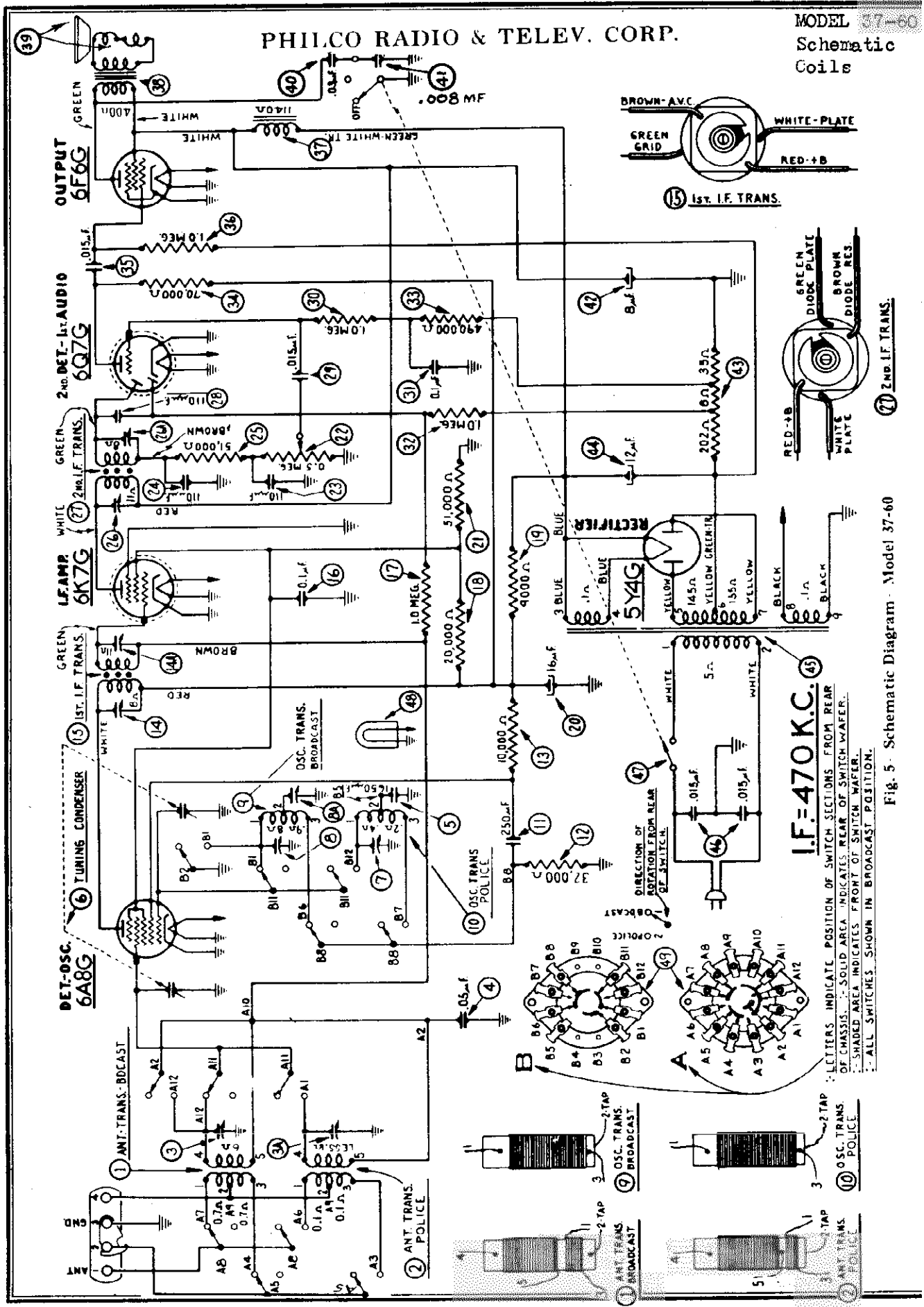

Fig. 5 Schematic Diagram - Model 37-60

©John F. Rider, Publisher

MODEL 37-60
Voltage, Socket Circuit Data, Transformer Data

PHILCO RADIO & TELEV. CORP.

Model 37-60

General Description

Model 37-60 is a 5 tube superheterodyne receiver for operation on alternating current and has two tuning ranges, covering Standard Broadcast and American short-wave reception up to 7 megacycles. The new Philco High Efficiency self-centering glass tubes are used.

The circuit incorporates the Philco Aerial Tuning System—controlled by the range switch—which provides maximum sensitivity and noise reduction when used with the Philco All Wave Aerial.

The red and black leads of the All Wave Aerial "transmission line" are connected to terminals 1 and 2 respectively, of the terminal panel provided at the rear of the chassis. Connect the jumper of the terminal panel across terminals 3 and 4.

If a temporary aerial is used, the jumper should be across terminal 2 and 3. The aerial connects to terminal 1 and the ground to terminals 3. A good ground connection is required in all installations.

CONSTRUCTION

The chassis is constructed in three basic assembly units.

The Radio Frequency unit contains a 6A8G tube which functions as a Detector-Oscillator, tuning condenser, antenna and oscillator coils for each tuning range, selector switch—compensating condensers for all coils and other parts necessary for the associated circuits. The unit is separately mounted on rubber grommets, cushioning it from the main chassis.

The Intermediate Frequency unit, mounted on the right-hand side of the chassis (facing the front) consists of the Intermediate Frequency coils compensating condensers, a 6K7G tube for I. F. Amplifier stage, and a 6Q7G tube as the second detector-automatic volume control and first audio stage.

All voltages supplied to the I. F. and R. F. units are furnished from a terminal strip mounted in this unit.

The Power Pack and audio output circuits, together with the required Voltage dividers and filter condensers are mounted in the power unit. All high Voltage A. C. Wiring is housed in the power transformer assembly which includes the rectifier socket.

Although unit construction has changed the appearance of this model, the service bulletin will be of great assistance in checking through all stages of the receiver. The Wiring Diagram, as usual, is numbered, indicating all important parts. These numbers correspond with the parts layout shown in Fig. 6. In addition, the range switch wafers are shown on the schematic diagram. The contacts on each wafer are lettered and numbered to indicate their connection points in the schematic diagram, which are also lettered and numbered. The physical drawings of each coil used in the receiver are also shown on schematic diagram Fig. 5. The connections of these coils are numbered on the coil itself and on the schematic diagram.

Fig. 1 shows the Voltage measurements taken from the bottom of the socket at each contact. In Fig. 2, the correct position of the dial indicator, for proper adjustment of the compensators is shown. Figs. 3 and 4, are the location of the I. F. and R. F. compensators respectively.

This Receiver is supplied in two models, type B and type F. These instructions, however, are used for both types.

Electrical Specifications

Voltage Rating: 115 Volts. A. C.
Frequency Rating: 50-60 Cycle.
For 25-40 cycle operation use Power Transformer, marked with asterisks in Parts List.
Power Consumption: 60 Watts.
Type and Number of Philco Tubes: 1 type 6A8G First Detector-oscillator; 1 type 6K7C I. F. Amplifier; 1 type 6Q7G 2nd Detector, A. V. C., and 1st Audio; 1 type 6F6G Pentode Output and 1 type 5Y4G, Rectifier.
Speaker: S7.
Type of Circuit: Superheterodyne with Pentode Power Output.
Intermediate Frequency: 470 K. C.
Undistorted Power Output: 3 Watts.
Tuning Ranges: Two—(1): 530 to 1720 K.C., (2): 2.3 to 7.4 M.C.

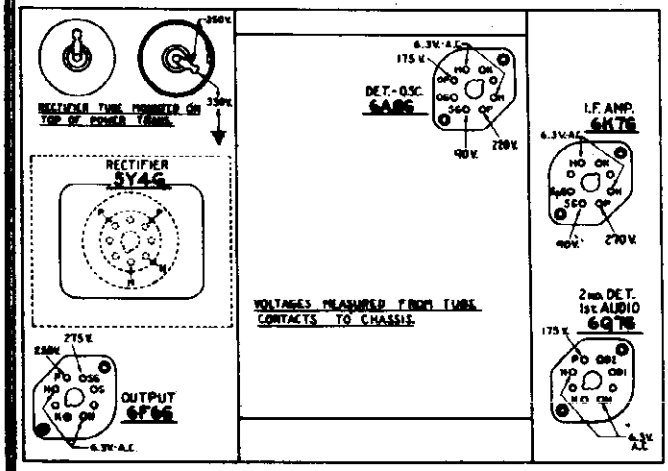

Fig. 1—Socket Voltages Viewed from Underside of Chassis

Measurements taken with Philco Model 025 Circuit Tester which contains a 1000 ohm per volt voltmeter. Line voltage, 115—Wave Switch in Broadcast Position. Dial turned to 600 KC.

POWER TRANSFORMER DATA

Lead No. Shown on Schematic	A. C. Volts	Current	Circuit	Color	Resistance
1-2	120	—	Primary	White	50 ohms
5-7	670	70 M. A.	High Voltage Sec.	Yellow	145 ohms 155 ohms
3-4	5.0	2.0 A	Fil. Rect.	Blue	.1 ohms
8-9	6.7	2.1 A	Fil.	Black	.1 ohms
6	—	—	Center Tap of 5-7	Yellow Green Tr	—

©John F. Rider, Publisher

PHILCO RADIO & TELEV. CORP.

MODEL 37-60
Trimmers
Alignment

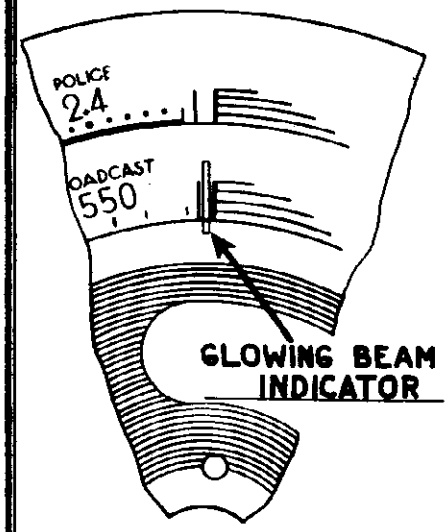

Fig. 2—Dial Calibration

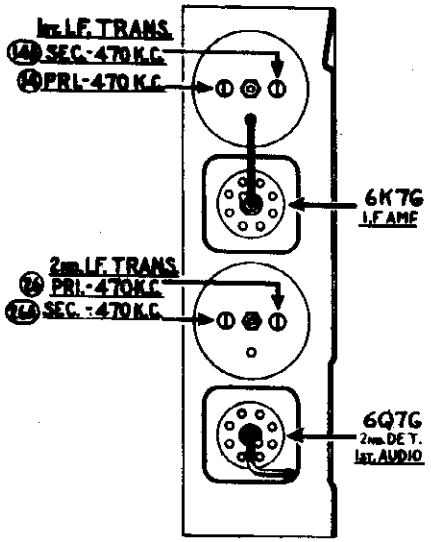

Fig. 3—Locations of I. F. Compensators Top of Chassis

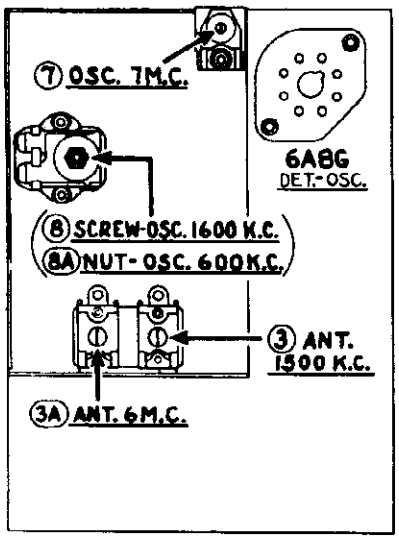

Fig. 4—Locations of R. F. Compensators Underside o Chassis

Adjustment of Compensators

The accurate adjustment of the various compensating condensers is vital to the proper functioning of this receiver. There are four compensating condensers in the I. F. Circuit, three in the Oscillator Circuit, and two in the Antenna Circuit. Incorrect adjustment will cause loss of sensitivity, unsatisfactory tone, and poor selectivity.

To accurately adjust this receiver, precision test equipment is necessary. A signal generator such as the PHILCO MODEL 088 SIGNAL GENERATOR, covering from 110 to 20,000 K. C. is recommended to adjust the compensators at the various frequencies specified. A visual indication of the receiver output is also necessary to obtain correct adjustment of the compensators. PHILCO MODEL 025 CIRCUIT TESTER contains a very sensitive output meter and is recommended for these adjustments.

Philco Fibre Wrench No. 3164 and Fibre Handle Screw-driver No. 27-7059 complete the necessary equipment for these adjustments. The locations of the various compensators are shown in Figs. 3 and 4.

The following procedure must be observed in adjusting the compensators:

DIAL ADJUSTMENT—The Tuning condenser is set at the maximum capacity position, by turning the tuning knob counterclockwise. Loosen the set screw of dial hub and set dial, (see Fig. 2) with Glowing Indicator centered between the index lines at the low frequency end of scale.

OUTPUT METER—The Output Meter is attached to the Plate and Cathode terminals of the (6F6G tube) and adjusted to use the (0-30) volt scale. When adjusting each circuit, care should be taken to have the signal generator attenuator set to give approximately ¼ scale reading on output meter.

INTERMEDIATE FREQUENCY CIRCUIT

1 Turn wave band switch to Range 1. Rotate the tuning control to approximately 600 K. C. Connect the 088 Signal Generator output lead through a .1 mfd. condenser to the grid of the 6A8G tube, and the ground lead of Signal Generator to the chassis.

2 Set Signal Generator indicator for 470 K. C., adjust attenuator for approximately ¼ scale reading on output meter. Then adjust compensators ㉘a 2nd I. F. Sec., ㉘ 2nd I. F. Pri., ⑭a 1st I. F. Sec., ⑭ 1st I. F. Pri., for maximum reading on output meter.

RADIO FREQUENCY CIRCUIT—Range 2: 2.3 to 7.4 M. C.

1 Turn Range switch to Range 2. Remove signal generator output lead from the grid of 6A8G tube.

2 Attach signal generator output lead through a 0.1 mfd. condenser to the ANT. TERMINAL No. 1, on aerial panel, and the generator ground to chassis. Connect TERMINAL No. 2, to GROUND TERMINAL No. 3, with connector link provided on the panel.

3 Set Signal Generator and receiver dials for 7.0 M. C. Now adjust compensator ⑦ for maximum reading on output meter. Then turn Signal Generator and Receiver to 6.0 M. C., and adjust compensator ⑧a for maximum output.

RANGE 1: 530 to 1720 K. C.

1 Turn range switch to Range 1. Turn the Receiver dial to 1600 K. C. Then adjust compensators ⑧ and ③ for maximum reading on output meter.

The 088 Signal Generator dial is set at 800 K. C. and the second harmonic of this frequency (1600 K. C.) is used in making the above adjustment.

2 The low frequency end of the band is now tuned by turning Signal Generator and Receiver dials to 600 K. C. and adjusting compensator ⑧a—see note (a) below—for maximum output.

(a) When compensator ⑧a osc. series is being adjusted, the Tuning Condenser must be rolled for maximum output. This is accomplished as follows: First tune compensator ⑧a for maximum output. Then vary the Tuning Condenser for maximum output at 600 K. C. Now retune Compensator ⑧a, and again vary the tuning condenser back and forth about 600 K. C., for maximum output. This operation of first tuning the Compensator, then the Tuning Condenser is continued until maximum output is obtained at the 600 K. C. frequency.

3 Set the Signal Generator and Receiver dials for 1600 K. C. and re-adjust Compensator ⑧ for maximum output. Then turn the dials to 1500 K. C. and re-adjust compensator ③ for maximum reading on output meter.

©John F. Rider, Publisher

MODEL 37-60
Chassis
Parts

PHILCO RADIO & TELEV. CORP.

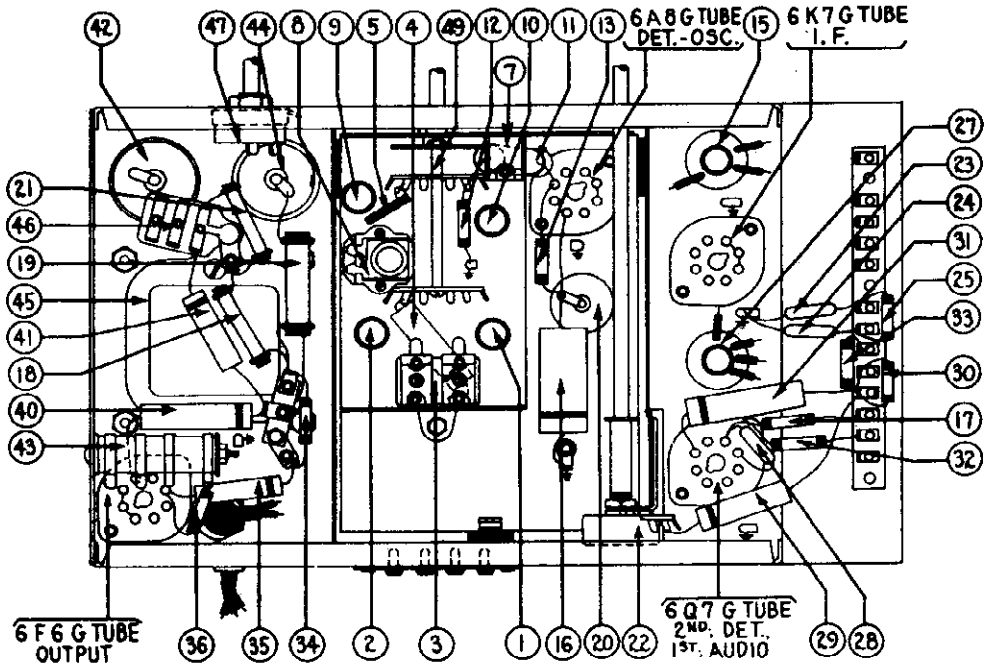

Fig. 6—Base View of Chassis

Replacement Parts—Model 37-60

Schem. No.	Description	Part No.	Price List
①	Antenna Transformer (Broadcast)	32-2108	$0.80
②	Antenna Transformer (Police)	32-2119	.65
③	Compensator ANT 1600 K.C.	31-6093	.40
③A	ANT. Compensator 6 meg.	Part of ③	
④	Condenser (.05 mfd. Tubular)	30-4444	.20
⑤	Condenser (1650 mfd. Semi-fixed)	31-6096	.40
⑥	Tuning Condenser	31-1826	3.00
⑦	Oscillator Compensator (Police 7 M.C.)	31-6101	.20
⑧	Oscillator Compensator (Broadcast) 1600 K.C. Screw	31-6100	.40
⑧A	Compensator (600 K.C. Nut)	Part of ⑧	
⑨	Oscillator Transformer (Broadcast)	32-2120	.65
⑩	Oscillator Transformer (Police)	32-2121	.40
⑪	Condenser (.250 mmfd. Mica)	30-1032	.25
⑫	Resistor (32000 ohms ½ watt)	33-332339	.20
⑬	Resistor (10000 ½ watt)	33-310339	.20
⑭	Compensator (Pri. 1st I.F.)	Part of ⑮	
⑭A	Compensator (Sec. 1st I.F.)	Part of ⑭	
⑮	1st I.F. Transformer	32-2100	1.50
⑯	Condenser (.1 mfd. Tubular)	30-4170	.25
⑰	Resistor (1 meg. ½ watt)	33-510344	.20
⑱	Resistor (20000 ohms 1 watt)	33-320439	.20
⑲	Resistor (9000 ohms 2 watts)	33-290539	.30
⑳	Electrolytic Condenser (16 mf.l.)	30-2118	1.65
㉒	Resistor (51000 ohms ½ watt)	33-351439	.20
㉓	Volume Control	33-5157	1.00
㉔	Condenser (mica 110 mmfd.)	30-1031	.20
㉕	Condenser (mica 110 mmfd.)	30-1031	.20
㉖	Resistor (51000 ohms ½ watt)	33-351339	.20
㉗	Compensator 2nd I.F. Pri.	Part of ㉘	
㉗A	Compensator 2nd I.F. Sec.	Part of ㉘	
㉘	2nd I.F. Transformer Unit	32-2102	1.50
㉙	Condenser (mica 110 mmfd.)	30-1031	.20
㉚	Condenser (Tubular .015 mfd.)	30-4358	.20
㉛	Resistor (1 meg. ½ watt)	33-510339	.20
㉜	Condenser (Tubular .1 mfd.)	30-4122	.20
㉝	Resistor (1 megohm ½ watt)	33-510339	.20
㉞	Resistor (490000 ohm ½ watt)	33-449339	.20
㉟	Resistor (70000 ohm ½ watt)	33-370339	.20
㊱	Condenser (Tubular .015 mfd.)	30-4226	.20
㊲	Resistor (1 meg. ½ watt)	33-510339	.20
㊳	Field Coil Assembly	36-3039	2.75
㊴	Output Transformer	32-7019	
㊵	Cone & Voice Coil Assembly	36-3157	.80
㊶	Condenser (Tubular .03 mfd.)	30-4380	.20
㊷	Condenser (Tubular .008 mfd.)	30-4112	.20
㊸	Electrolytic Condenser (8 mfd.)	30-2024	1.10
㊹	Bias Resistor	33-3277	.20
㊺	Electrolytic Condenser (12 mfd.)	30-2117	1.20
㊻	Power Transformer (50-60 cycle, 115 volts)	32-7583	4.25
	*Power Transformer (25-40 cycle, 115 volts)	32-7584	
㊼	Condenser (Bakelite Twin .015 mfd.)	3793 DG	.40
㊽	Tone Control & Power Switch	42-1180	$0.75
㊾	Pilot Lamp	34-2039	.15
㊿	Wave Switch	42-1195	1.50
	Dial	27-5196	.30
	Dial Hub	28-7152 FA-3	.10
	Dial Hub Clamp	28-2837 FA-3	.10
	Set Screw	N-1506 Per C	2.00
	Screen Bracket & Screen Assembly	31-1878	.25
	Pilot Lamp Socket Assembly	38-7706	.35
	Tube Socket 7 Prong	27-6057	.11
	Tube Socket 8 Prong	27-6058	.11
	Tube Shield	28-2726	.10
	Tube Shield Base	28-3898	.03
	I. F. Coil Shield	38-7763	.20
	R.F. Trans. Mtg. Plate	28-3908	.02
	R.F. Trans. Mtg. Spacer	27-6228	.01
	R.F. Trans. Mtg. Screw	W-1635 Per C	.30
	R.F. Mtg. Grommet	27-4317	.04
	R.F. Mtg. Sleeve	28-2257 FA-3	.01
	R.F. Mtg. Bushing	27-6339 Per C	.40
	Screw	W-729	
	Vernier Drive Assem.	31-1879	
	B.C. Resistor Mtg. Screw	W-512 Per C	.90
	B.C. Resistor Mtg. Nut	W-317A Per C	.40
	Volume Control Shaft	28-6498	
	Volume Control Shaft Spring	28-4117 Per C	.40
	Washer Volume Control Shaft	28-4186	
	Washer Volume Control Shaft	4436 Per C	1.50
	Volume Control Shaft Retaining Clip	28-8610	.03
	Volume Control Mtg. Nut	W-684 FA-3 Per C	1.25
	Tone Control Mtg. Nut	W-684 FA-3 Per C	1.25
	Insulator	27-6320 Per C	.40
	I.F. Terminal Panel	38-7708	.25
	I.F. Terminal Spacer	4122	.01
	Knob Tuning	27-4321	.10
	Knob Volume, Tone	27-4332	.10
	Knob Selector Switch	27-4332	.10
	Chassis Mtg. Screw		
	Tuning Condenser Grommet	27-4325	.02
	Screw	W-650 FA-3 Per C	.40
	Baffle Assembly B Cabinet	40-5935	
	A.C. Cord	L-2163	.40
	Speaker Cable	L-2181	.25
	Clamp Electrolytic Condenser	6440	.05
	Insulator Electrolytic Condenser	27-7194	.01
	Grid Cap	38-3888	.01
	Spacer, (Compensating Condenser)	29-6032	.04
	Screw	W-1653 FA-3 Per C	.30
	†B Speaker S-7	36-1009	5.75
	Nut Mtg. Speaker	W-124 A Per C	1.35
	Baffle Assem. F Cabinet	40-5933	

*25 cycle Transformer 32-7584 used in Model 37-60A.
†Speaker used in F & B Cabinet.

PRICES SUBJECT TO CHANGE WITHOUT NOTICE

©John F. Rider, Publisher

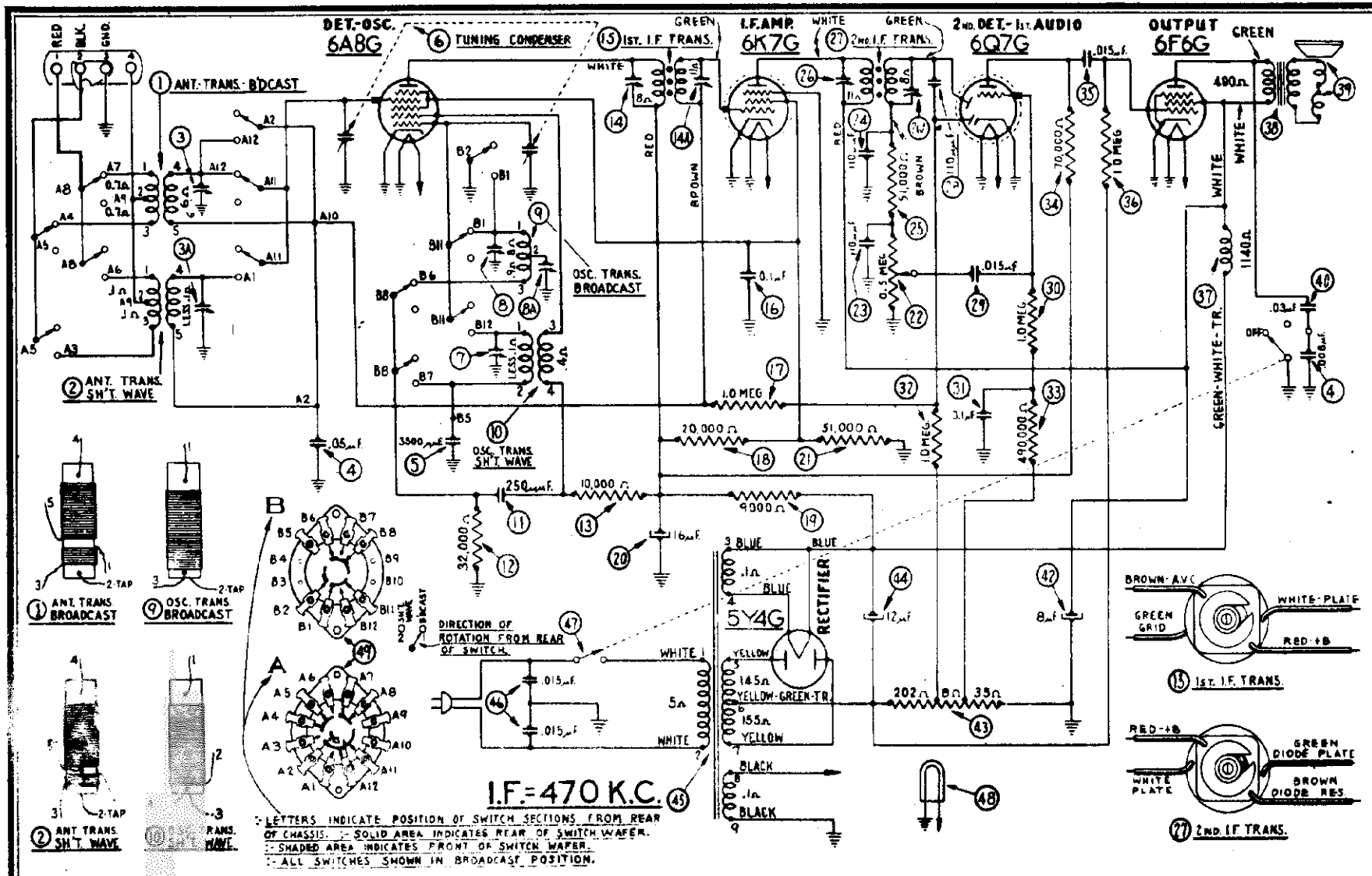

Fig. 5—Schematic Diagram—Model 37-61

The red and black leads of the High-Efficiency Aerial "transmission line" are connected to terminals 1 and 2 respectively, of the terminal panel provided at the rear of the chassis. Connect the jumper of the terminal panel across terminal 3 and 4. A good ground connection is required in all installations. Make the ground connection to terminal 3 on the terminal panel.

If a temporary aerial is used, the jumper should be across terminal 2 and 3. The aerial connects to terminal 1 and the ground to terminal 3.

Voltage Rating: 115 Volts. A. C.
Frequency Rating: 50-60 Cycle.
For 25 to 40 cycle operation use Power Transformer, marked with asterisks in Parts List.
Power Consumption: 60 Watts.

Type of Circuit: Superheterodyne with Pentode Power Output.
Intermediate Frequency: 470 K. C.
Undistorted Power Output: 3 Watts.
Tuning Ranges: Two—(1): 530 to 1720 K. C.; (2): 5.7 to 18.2 M. C.

2nd Detector, A. V. C., and 1st Audio; 1 type 6F6G Pentode Output and 1 type 5Y4G, Rectifier.
Speaker: S7.

MODEL 37-61
Trimmers
Alignment

PHILCO RADIO & TELEV. CORP.

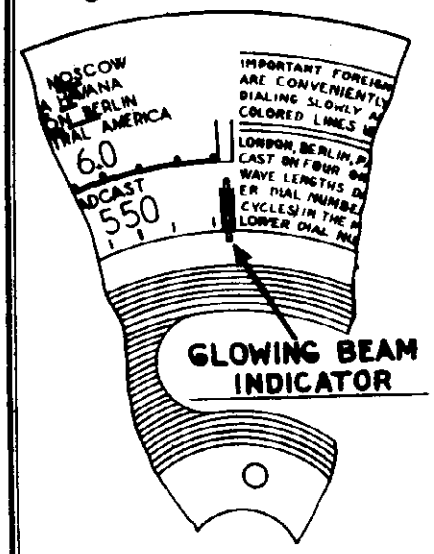

Fig. 2—Dial Calibration

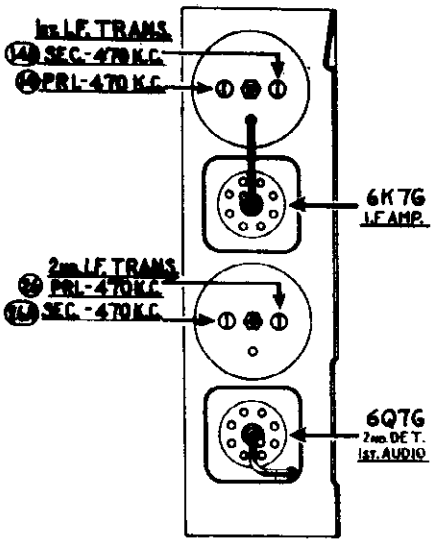

Fig. 3—Locations of I. F. Compensators Top of Chassis

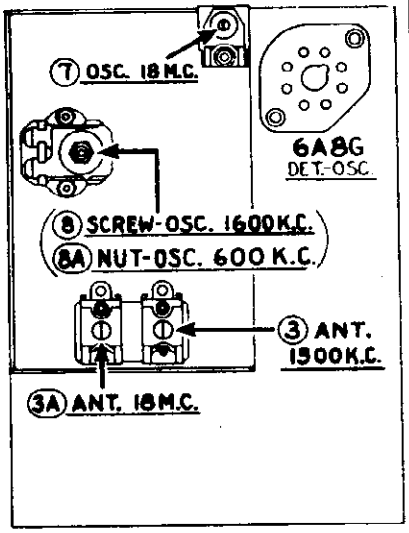

Fig. 4—Locations of R. F. Compensators Underside of Chassis

Adjustment of Compensators

The accurate adjustment of the various compensating condensers is vital to the proper functioning of this receiver. There are four compensating condensers in the I. F. Circuit; three in the Oscillator Circuit; and two in the Antenna Circuit. Incorrect adjustment will cause loss of sensitivity, unsatisfactory tone, and poor selectivity.

To accurately adjust this receiver, precision test equipment is necessary. A signal generator such as the PHILCO MODEL 088 SIGNAL GENERATOR, covering from 110 to 20000 K. C. is recommended to adjust the compensators at the various frequencies specified. A visual indication of the receiver output is also necessary to obtain correct adjustment of the compensators. PHILCO MODEL 025 CIRCUIT TESTER contains a very sensitive output meter and is recommended for these adjustments.

Philco Fibre Wrench No. 3164 and Fibre Handle Screw-driver No. 27-7059 complete the necessary equipment for these adjustments. The locations of the various compensators are shown in Figs. 3 and 4.

The following procedure must be observed in adjusting the compensators:—

DIAL ADJUSTMENT—The Tuning Condenser is set at the maximum capacity position, by turning the tuning knob counter-clockwise. Loosen the set screw of dial hub and set dial, (see Fig. 2) with Glowing Indicator centered between the index lines at the low frequency end of scale.

OUTPUT METER—The Output Meter is connected to the Plate and Cathode terminals of the (6F6G) tube and adjusted to use the (0-30) Volt scale. When adjusting each circuit, care should be taken to have the Signal Generator attenuator set to give approximately ¼ scale reading on output meter.

INTERMEDIATE FREQUENCY CIRCUIT

1 Turn range switch to Range 1. Rotate the tuning control to approximately 600 K. C. Connect the 088 Signal Generator output lead through a .1 mfd. condenser to the grid of the 6A8G tube.

2 Set Signal Generator indicator for 470 K. C. adjust attenuator for approximately ¼ scale reading on output meter. Then adjust compensators ㉘a 2nd I. F. Sec., ㉘ 2nd I. F. Pri., ⑭a 1st I. F. Sec., ⑭ 1st I. F. Pri., for maximum reading on output meter.

RADIO FREQUENCY CIRCUIT

Range 2.—5.7 to 18 M. C.

1 Remove the signal generator output lead and series condenser from the 6A8G tube and connect them to the ANT. TERMINAL No. 1, on aerial input panel (rear of chassis) and the generator ground lead to GND. TERMINAL No. 3, rear of chassis. Connect TERMINAL No. 2 to GROUND TERMINAL No. 3 with connector link provided on the panel.

2 Set range switch in position No. 2 (S. W.). Turn signal generator and receiver dials to 18 M. C. and adjust compensator (7) Osc. for maximum output.

3 The adjustment of the antenna compensator on the high frequency range causes a slight detuning of the oscillator circuit. In order to overcome this detuning effect, connect a variable condenser of approximately 350 mfd., having a good vernier drive, across the oscillator section of the tuning condenser. Leaving the signal generator and receiver dials at 18 M. C., tune the added condenser so that the second harmonic of the receiver oscillator will beat against the signal from the signal generator. The antenna compensator ③a should then be adjusted to give maximum output.

4 Now remove the external condenser from the tuning condenser of receiver and turn compensator ⑦ osc. to the maximum capacity position (clockwise), then without moving signal generator or receiver tuning condenser, turn compensator ⑦ (counter-clockwise) until a second peak is reached on the output meter. The first peak is caused by tuning to the image frequency signal and must be neglected. Compensator ⑦ is adjusted on the second peak to give maximum output.

RANGE 1: 530 to 1720 K. C.

Turn range switch to Range No. 1. Turn the Receiver dial to 1600 K. C. Then adjust compensators ⑧ and ③ for maximum reading on output meter.

The 088 Signal Generator dial is set at 800 K. C. and the second harmonic of this frequency (1600 K. C.) is used in making the above adjustment.

2 The low frequency end of the band is now tuned by turning Signal Generator and Receiver dials to 600 K. C. and adjusting compensator ⑧a—see note (a) below—for maximum output.

(a) When compensator ⑧a osc. series is being adjusted, the Tuning Condenser must be rolled for maximum output. This is accomplished as follows: First tune compensator ⑧a for maximum output. Then vary the Tuning Condenser for maximum output at 600 K. C. Now retune Compensator ⑧a and again vary the tuning condenser back and forth at 600 K. C., for maximum output. This operation of first tuning the Compensator, then the Tuning Condenser is continued until maximum output is obtained at the 600 K. C. frequency.

3 Set the Signal Generator and Receiver Dials for 1600 K. C. and re-adjust Compensator ⑧ for maximum output. Then turn the dials to 1500 K. C. and re-adjust compensator ③ for maximum reading on output meter.

©John F. Rider, Publisher

Transformer Data
Notes, Parts

PHILCO RADIO & TELEV. CORP.

MODEL 37-61
Chassis, Voltage

Model 37-61 is a 5 tube superheterodyne receiver for operation on alternating current and has two tuning ranges, covering standard broadcast and short wave reception. It, also, uses the new Philco High Efficiency self-centering glass tubes.

The circuit includes the Philco Foreign Tuning System—controlled by the range switch—providing maximum sensitivity and noise reduction when used with the New Philco High-Efficiency Aerial, supplied with the receiver.

Fig. 1 shows the Voltage measurements taken from the botto of the socket at each contact. In Fig. 2, the correct position the dial indicator, for proper adjustment of the compensato is shown. Figs. 3 and 4 show the location of the I. F. and R. compensators respectively.

This receiver will be supplied in two model cabinets type and F. These instructions, however, will cover both ty cabinets.

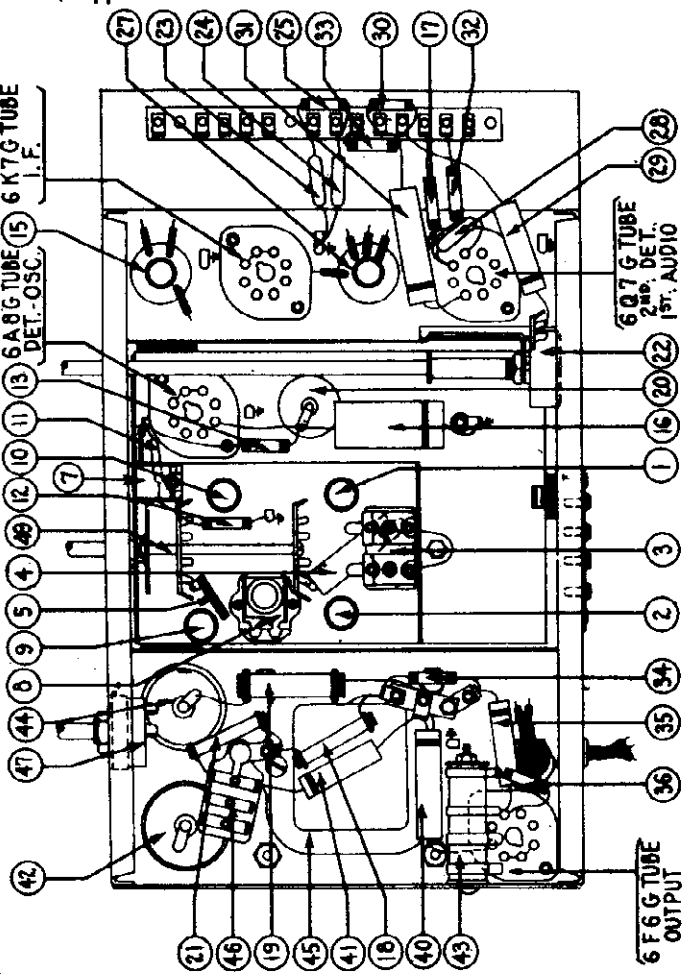

Fig. 6—Base View of Chassis

Schem. No.	Description	Part No.	Price List
①	Antenna Trans. Broadcast	32-2108	90.90
②	Antenna Trans. S.W.	32-2142	.80
③	Compensator Twin Ant. 1500 K.C.	31-6003	.40
③A	Compensator Ant. 18 M.C.	Part of ③	
④	Condenser (Tubular .05 mfd.)	30-4444	.20
⑤	Condenser Semi-fixed 3500 mfd.	31-6102	.60
⑥	Tuning Condenser	31-1851	3.25
⑦	Compensator Osc., 18 M.C.	31-6101	.20
⑧	Compensator Osc., 1500 K.C. "Screw"	31-6100	.40
⑧A	Compensator Osc., 600 K.C. "Nut"	Part of ⑧	
⑨	Transformer Osc. Broadcast	32-2130	.65
⑩	Transformer Osc. S.W.	32-2143	.65
⑪	Condenser (Tubular 250 mfd.)	30-1082	.25
⑫	Resistor (20000 ohms ½ watt)	33-332339	.20
⑬	Resistor (10000 ohms ½ watt)	33-310339	.20
⑭	Compensator (1st I.F. Pri. 470 K.C.)	Part of ①	
⑭A	Compensator (1st I.F. Sec. 470 K.C.)	Part of ①	
⑮	1st I.F. Transformer	32-2100	1.50
⑯	Condenser (Tubular 0.1 mfd.)	30-4170	.25
⑰	Resistor (1 megohm ½ watt)	33-510339	.20
⑱	Resistor (20000 ohm, 1 watt)	33-320439	.20
⑲	Resistor (9000 ohms, 2 watt)	33-290839	.20
⑳	Electrolytic condenser, 16 mfd.	30-2118	1.65
㉑	Resistor (51000 ohms 1 watt)	33-351439	.20
㉒	Volume Control	32-6157	1.00
㉓	Condenser (110 mmfd. Mica)	30-1081	.20
㉔	Condenser (110 mmfd. Mica)	30-1081	.20
㉕	Resistor (51000 ohms ½ watt)	33-351339	.20
㉖	Compensator (2nd I.F. Pri.) 470 K.C.	Part of ㉗	
㉖A	Compensator (2nd I.F. Sec.) 470 K.C.	Part of ㉗	
㉗	2nd I.F. Transformer	32-2102	1.50
㉘	Condenser (110 mmfd. Mica)	30-1031	.20
㉙	Condenser (.015 mfd. Tubular)	30-4258	.20
㉚	Resistor (1 megohm ½ watt)	33-510339	.20
㉛	Condenser (0.1 mfd. Tubular)	30-4122	.20
㉜	Resistor (1.0 megohm ½ watt)	33-510439	.20
㉝	Resistor (400,000 ohm ½ watt)	33-440339	.20
㉞	Resistor (70000 ohm ½ watt)	33-370339	.20
㉟	Condenser (.015 mfd. Tubular)	30-4256	.20
㊱	Resistor (1 megohm ½ watt)	33-510339	.20
㊲	Field Coil Assembly	36-3089	2.75
㊳	Output Transformer	32-7019	.85
㊴	Cone and Voice Coil Assembly	36-3157	.90
㊵	Condenser (.03 mfd. Tubular)	30-4260	.20
㊶	Condenser (.006 mfd. Tubular)	30-4112	.20
㊷	Electrolytic Condenser (8 mfd.)	30-2094	1.10
㊸	Bias Resistor (345 ohm)	33-3277	.20
㊹	Electrolytic Condenser 12 mfd.	30-2117	1.30
㊺P	Power Transformer (50-60 cycle 105-120 volt)	32-7863	4.25
	*Power Transformer (25 cycle 115 volt)	32-7864	
㊻	Condenser Bakelite Twin (.015-.015 mfd.)	3798 DG	.40
㊼	Tone Control & AC Switch	42-1189	.75
㊽	Pilot Lamp	34-3030	.15

*Power Transformer used in Model 37-61A

PRICES SUBJECT TO CHANGE WITHOUT NOTICE

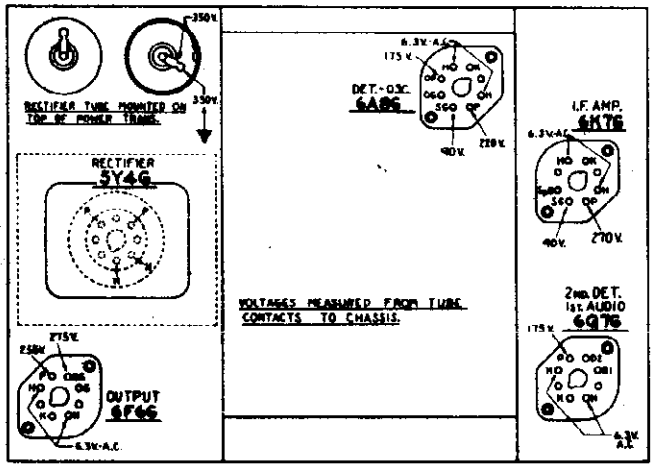

Fig. 1—Socket Voltages Viewed from Underside of Chassis

Measurements taken with PHILCO MODEL 025 Circuit Tester which contains a 1000 ohms per volt Voltmeter. Line voltage, 115—Range Switch in Broadcast Position. Dial tuned to 600 K. C.

POWER TRANSFORMER DATA

Lead No. Shown on Schematic	A. C. Volts	Current	Circuit	Color	Resistance
1-2	120	—	Pri.	White	5 ohms
3-4	5.0	2.0A	Fil. Rect.	Blue	.1 ohm
5-7	670	70 M. A.	High Voltage Sec.	Yellow	145 ohms 155 ohms
6	—	—	Center Tap of 5-7	Yellow Green Tr.	—
8-9	6.7	2.1A	Fil.	Black	.1 ohm

©John F. Rider, Publisher

MODELS 806,808,809,PHD FN,CT-2,ST-3,CT-5 FT-6,NT-7 PHILCO RADIO & TELEV. CORP.

Changes Parts Numbering System

RUN NUMBER CHANGE DATA

The run numbers are stamped both on the top side and the underneath side of the sub-base. They are usually stamped on the sub base but when this is not practical, due to all the space being taken up with the parts, then the numbers will be found on the vibrator section partition or in some other conspicuous place. The numbers are stamped in black ink with 1/4" rubber stencils and should not be confused with various other numbers, also stamped inside the housing in black ink, but of a larger size.

The run number and the conveyor number appear together. The run number is the first number given and the conveyor number, which can de disregarded, is the second number.

Not all run number changes affect the parts or the wiring of the Receiver so that information on only those runs, having to do with major changes or part changes will be furnished.

The following run number change data are an invaluable aid in service work and should be kept with other circuit service data.

MODEL 806

RUN No. 3—Second I.F. Transformer, (58 on the schematic), has been replaced with a new type having the same part number. The new Transformer can be identified by the white paint mark on the fibre. The 50 mmfd. Condenser, Part No. 30-1029 (5 on the schematic), has been replaced with another 50 mmfd. Condenser, Part No. 4587.

RUN No. 5—Part No. 33-1177, a 15,000 ohm resistor, (48 on the schematic), has been replaced with a 51,000 ohm resistor Part No. 33-1163.

RUN No. 7—An additional "A" choke, Part No. 32-1438, has been added in series between the "A" choke (54 on the schematic), and the tube filaments. A 250 mmfd. condenser, Part No. 30-1032, has been added. One side is connected between the new choke and the choke 54. The other side of the condenser is connected to ground.

RUN No. 8—An antenna interference choke, Part No. 32-1678, has been added in series with the antenna lead and the antenna transformer and condenser (1 and 2 on the schematic).

RUN No. 10—A wiring panel is used for mounting the large tubular condensers on the sub-base to prevent the condenser leads from breaking off.

RUN No. 11—Part No. 30-4227, a .5 mfd. condenser, (7 on the schematic), has been replaced with another .5 mfd. condenser, Part No. 30-4147. This new condenser is mounted on the sub-base under the R. F. transformer shields.

MODEL 808

RUN No. 2—A 250 mmfd. condenser, Part No. 30-1032, has been added across the secondary of the output transformer (58 on the schematic).

RUN No. 3—Remove the condenser that was added in run number 2

MODEL 809

RUN No. 2—Part No. 30-4227, a .5 mfd. condenser, (7 on the schematic), has been replaced with another .5 mfd condenser, Part No. 30-4147. This new condenser is mounted on the sub-base under the R. F. transformer shield.

MODEL PHD

RUN No. 4—Part No. 30-1029, a 50 mmfd. condenser, (58 on the schematic), has been replaced with a 250 mmfd. condenser, Part No. 30-1032.

An interference choke, Part No. 32-1374, has been added in series between the pilot lamp and the condenser, and resistor (52 and 53 on the schematic).

The dial, Part No. 27-5022, has been replaced with a new dial, Part No. 27-5070.

MODEL FN

RUN No. 8—The first I.F. transformer, (16 on the schematic) has been replaced with a new type having the same part number. The new transformer can be identified by the green paint mark on the fibre.

Part No. 33-3047, a 1500 ohm resistor, (38 on the schematic) has been replaced with a 2000 ohm resistor, Part No. 33-3048

MODEL CT-2

RUN No. 3—The oscillator transformer, Part No. 32-1537, (16 on the schematic), has been replaced with a new type having the same part number. The new transformer can be identified by the red paint mark on the fibre.

RUN No. 4—An antenna interference choke, Part No. 32-1382, has been added in series with the antenna lead and the antenna transformer and condenser (1 and 2 on the schematic).
Part No. 33-1194, a 11,000 ohm resistor, (42 on the schematic), has been replaced with a 10,000 ohm resistor, Part No. 33-1000.

MODEL ST3

RUN No. 2—The oscillator transformer, Part No. 32-1537, (16 on the schematic), has been replaced with a new type having the same part number. The new transformer can be identified by the red paint mark on the fibre.

RUN No. 3—The white lead of the output transformer is connected directly to the plate of the type 42 tube instead of to the pin-jack. This prevents audio feedback.

RUN No. 4—The tone control, Part No. 30-4243, and the 2000 mmfd. condenser, Part No. 30-4177 (66 and 67 on the schematic), have been removed. These parts are replaced with the new tone control, Part No. 30-4298.

RUN No. 5—A wire is connected from the ground spring between the antenna and R. F. stage of the tuning condenser, to the ground lug on the antenna transformer (1 on the schematic), to reduce vibrator interference.

MODEL CT5

RUN No. 2—An antenna interference choke, Part No. 32-1382, has been added in series with the antenna lead, and the antenna transformer and condenser, (1 and 2 on the schematic).

MODEL FT6

RUN No. 3—The oscillator transformer, Part No. 32-1537, (16 on the schematic), has been replaced with a new type having the same part number. The new transformer can be identified by the red paint mark over the white and blue marking on the fibre.

RUN No. 4—A 110 mfd. condenser has been added. One side is connected between the switch and choke (58 and 59 on the schematic), and the other side is connected to ground. Part No. 30-4047, a .5 mfd. condenser, (9 on the schematic), has been replaced with another .5 mfd. condenser, Part No. 30-4227.

RUN No. 5—The 4000 mmfd. condenser, (45 on the schematic), has been relocated. One side of the condenser is connected to the tone control pin jack and the other side connected to ground.
Part No. 33-1000, a 10,000 ohm resistor, (42 on the schematic), has been replaced with an 11,000 ohm resistor, Part No. 33-1194.

RUN No. 8—The series padder, (17 on the schematic), has been removed from the tuning condenser and relocated on the sub-base.

MODEL NT-7

RUN No. 2—Part No. 30-4227, a .5 mfd. condenser, (7 on the schematic), has been replaced with another .5 mfd. condenser, Part No. 30-4147. This new condenser is mounted on the sub-base under the R. F. transformer shields.

RUN No. 3—The .05 mfd. condenser, Part No. 30-4020, (6 on the schematic), has been relocated. It is now between the antenna and R. F. transformer shields. Connections are the same.

PARTS NUMBERING SYSTEM

The first radio part numbers started at 3000 and progressed upward in order as new radio parts were added. Speaker part numbers started at 2999 and progressed downward as new speaker parts were added. There was no attempt made to classify the various kinds of parts and make identification easier until several years later. Part No. 3025 was a mica condenser but almost any other number could be a mica condenser also. The old parts numbering system was practically blind but with the new system now in effect, a part number indicates immediately the kind of part it represents. It consists of a two digit group classification number and a four digit identification number. Since it was not practical to re-number the old parts, they are still the same, but all new parts numbers are assigned in accordance with the following classification:

27—Fibre, bakelite—moulded parts.
1000-4999—forms, moulded parts, etc.
5000-5999—Celluloid parts.
6000-6999—Sockets.
7000-9999—finished parts—miscellaneous.
28—Metal parts—Unplated—unfinished.
29—Metal parts—plated and painted.
30—Fixed condensers
1000-1999—mica condensers.
2000-2999—electrolytic condensers.
4000-9999—paper condensers, sections, etc.
31—Variable condensers.
1000-5999—tuning condensers.
6000-9999—padding condensers.
32—Transformers—R. F., I. F. and other assemblies.
7000-8999—Power and audio transformers and other assemblies.
9000-9999—Field coils, etc.
33—Resistances.
1000-2999—carbon (fixed).
3000-4999—wire wound (fixed).
5000—variable (carbon and wire wound) and volume controls.
34—Tubes and Lamps.
1000-2999—tubes.
3000—tube kits.
35—Phonograph parts.
36—Speakers and speaker sub-assemblies.
1000-2999—complete speakers.
3000—speaker sub-assemblies.
37—Chassis and sub-assemblies, etc.
38—Sub-base and assemblies.
39—Printed matter.
40—Accessory kits.
5000—Accessory kits.
7000-7999—Transitone master kits.
8000-8999—Transitone hardware kits.
9000—Transitone suppression kits.
41—Dynamotor and Chargers.
1000-4999—Dynamotors, etc.
6000-7999—Chargers.
42—Controls and switches.
1000-4999—Switches and jacks.
5000-5999—Control units, etc.
43—Major sub-assemblies.
44—Silks and cloth.
45—Miscellaneous.
1000-1999—Display kits.
2000-2999—Miscellaneous parts.

SEPTEMBER, 1935

©John F. Rider, Publisher

MODEL 37-84(Code 122

PHILCO RADIO & TELEV. CORP. Schematic
Parts List

Replacement Parts for Model 37-84

No. On Figs.	Description	Part No.	List Price
①	Volume Control and On-off Switch	33-5055	1.45
②	Antenna Transformer	32-1310	.40
③	Condenser—Capacity obtained by twisting end of two leads together		
④	Tuning Condenser Assembly	31-1122	4.00
⑤	Compensator (Antenna)	Part of ④	...
⑥	Resistor (6000 ohms, ½ watt)	33-260339	.20
⑦	Condenser (.0014 mfd. Mica)	7007	.30
⑧	Resistor (13,000 ohms, ½ watt)	33-313439	.20
⑨	Condenser (Double .09-.09 mfd. Bakelite)	4989-DG	.40
⑩	Oscillator Transformer	32-1311	.40
⑪	Compensator (I. F. Primary)	04000A	.15
⑫	Resistor (16,000 ohms; 3 watt)	33-316639	.30
⑬	Compensator (Osc. 1700 K.C.)	Part of ④	...
⑭	I.F. Transformer	32-1313	1.05
⑮	Compensator (I.F. Sec.)	0-4000Y	.15
⑯	Resistor (4 meg.) inside (14)	35-540339	.20
⑰	Sensitivity Control	0-4000	...
⑱	Resistor (1 meg., ½ watt)	33-510339	.20
⑲	Resistor (10,000 ohms, ½ watt)	33-310339	.20
⑳	Condenser (.015-.001 mfd. Bakelite)	7762-EU	.25
㉑	Eliminated by Production Changes		
㉒	Resistor (24,000 ohms, ½ watt)	33-424339	.20
㉓	Resistor (490,000 ohms, ½ watt)	33-449339	.20
㉔	Condenser (.006 mfd. Bakelite)	7625-SU	.25
㉕	Output Transformer	32-7019	.85
㉖	Voice Coil and Cone Assembly	36-3157	...
㉗	Field Coil and Pot Assembly	36-3243	1.70
㉘	Condenser (.015-.015 mfd. Bakelite)	7762-EU	.40

No. On Figs.	Description	Part No.	List Price
㉙	Condenser (Electrolytic 4-8 mfd.)	30-2013	1.95
㉚	Resistor (Wire Wound 325 ohms)	7465	.1
㉛	Power Transformer (50-60 cycle 115)	32-7180	3.6
	Power Transformer (25 cycle 115)	7422	..
㉜	Pilot Lamp	6608	.0
	Eight Prong Socket Rectifier	27-6053	.1
	Seven Prong Socket	27-6057	.1
	Tube Shield	28-2726	.1
	Tube Shield Cap	28-2727	.0
	Knob	27-4282	.1
	Pointer	27-7933	.0
	AC Cord and Plug	L-2183	.0
	Speaker Cord	L-1474	.1
	Base Shield Plate	27-7452	.1
	Chassis Mounting Screw	W-490-A	2.75
	Chassis Mounting Washer	W-315-A	.50
	Output Transformer Shield	36-3025	.0
	Dial	27-5210	1.50
	R.F. Shield Assembly	38-5483	.5
	Speaker Mounting Screw	W-1604	..
	Speaker Mounting Nut	W-124-A	..
	Speaker SB	36-1073	..
	Baffle Silk Assembly	40-5961	..
	Spacer Padder Assem.	3098	..
	Screw Padder Assem.	W-614 FA-3	
	Nut Padder Assemb.	W-95 FA-3	
	Felt Washer Tuning Knob	27-7807	..
	Pilot Lamp Assem.	38-7578	..

PRICES SUBJECT TO CHANGE WITHOUT NOTICE

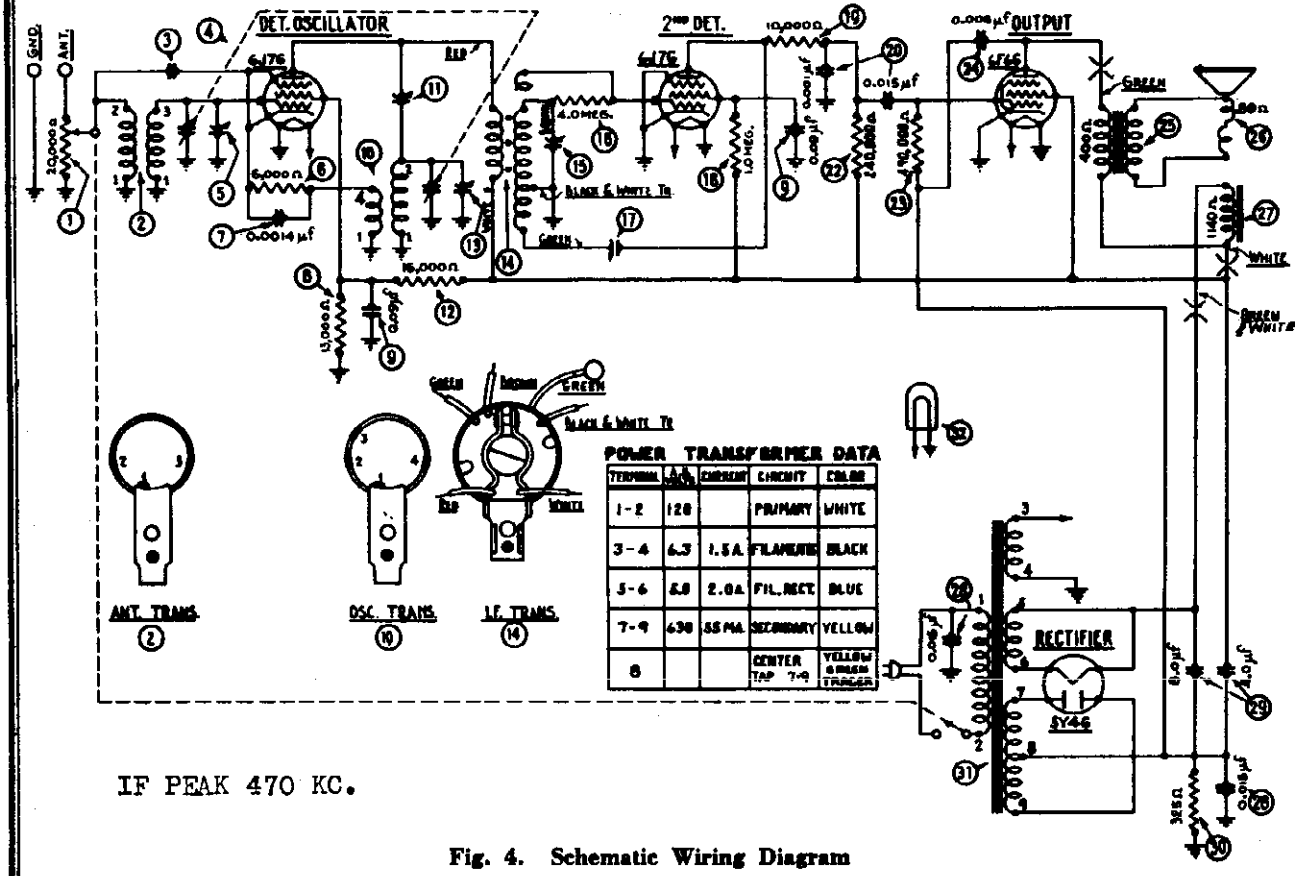

Fig. 4. Schematic Wiring Diagram

©John F. Rider, Publisher

MODEL 37-84(Code 122)
Socket,Trimmers
Voltage,Alignment

PHILCO RADIO & TELEV. CORP.

Model 37-84, Code-122

General Specifications

TYPE CIRCUIT: Superheterodyne with Pentode output.
POWER SUPPLY: 115 V., 60 cycle A.C.
TUBES USED: 1 type 6J7G, Det Osc., 1 type 6J7G 2nd detector—first audio, 1 type 6F6G output, 1 type 5Y4G Rectifier.
FREQUENCY RANGE: 540-1700 K.C.
INTERMEDIATE FREQUENCY: 470 K.C.
POWER CONSUMPTION: 45 watts.
SPEAKER: SB.
POWER OUTPUT: ½ watt.

Adjusting Compensating Condensers

To accurately adjust the compensating condensers in the Model 37-84 receiver, it is necessary to use a signal generator of high stability on all frequencies, such as the PHILCO MODEL 088 Signal Generator. This instrument has a continuous frequency range from 110 to 20,000 K.C., and is designed to meet every requirement of the serviceman.

An output meter is also needed,—**PHILCO Model 025 Circuit Tester** includes a very sensitive output meter.

Convenient tools to use in adjusting the compensators are the **PHILCO No. 3164 Fibre Wrench** and **No. 27-7069 Fibre Handled Screw-driver.**

The locations of the various compensating condensers are shown in Fig. 1. Connect the output meter to the plate and cathode contacts of the 6F6G power tube, and adjust it to use the 0-30 volt range.

When adjusting each circuit, care should be taken to have the signal generator attenuator set to approximately ¼ scale reading on output meter.

Intermediate Frequency Circuit

1. Turn gang condenser to maximum capacity (counter-clockwise) and set the volume control of the receiver in the maximum position (clockwise).
2. Connect the 088 signal generator output lead through a .1 mfd. condenser, to the grid of the 6J7G Detector-oscillator tube and the generator ground to the chassis.
3. Turn the sensitivity control ⑰ to maximum capacity position (clockwise), and then release 1½ turns (counter-clockwise).
4. Set signal generator at 470 K.C. and adjust compensators ⑩ and ⑫ for maximum reading on the output meter. Then turn sensitivity control ⑰ clockwise until a hiss (oscillation) is heard. Now turn sensitivity control ⑰ counter-clockwise until the hiss ceases, then continue for ¼ turn more.

Radio Frequency Circuit

1. Turn the gang condenser to the minimum capacity position (extreme clockwise) and place a .006" (six-thousandths inch) gauge between the stator and rotor plates. Now turn the gang counter-clockwise until stator and rotor plates touch gauge.
2. Remove gauge from gang condenser. Now place signal generator output lead through a 100 mmfd. condenser to the aerial post of the receiver. Set signal generator at 850 K.C., (using second harmonic, 1700 K.C.). Adjust compensators ⑨ osc., and ⑤ ant., for maximum reading on output meter.
3. Turn signal generator to 1400 K.C. and adjust gang condenser for maximum output. Then adjust compensator ⑥ for maximum reading on output meter.
4. After the above adjustments are completed, the dial pointer is checked for calibration by turning signal generator to 1000 K.C. Then tune receiver for maximum signal. The dial pointer should then indicate 1000 K.C.

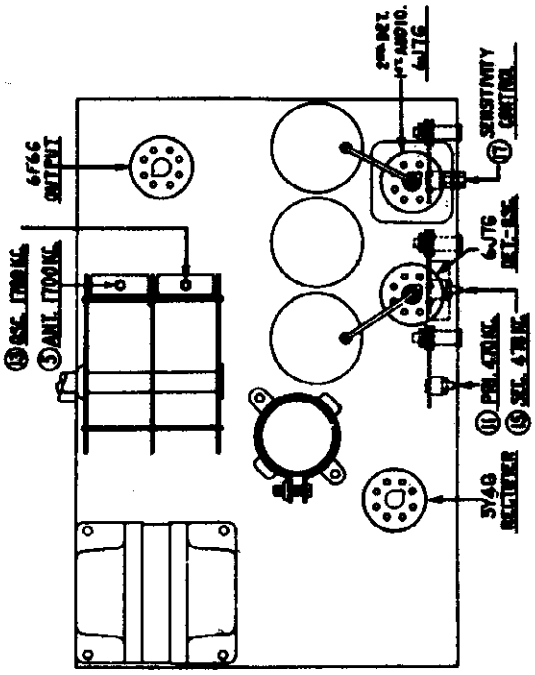

Fig. 1. Locations of Compensating Condensers

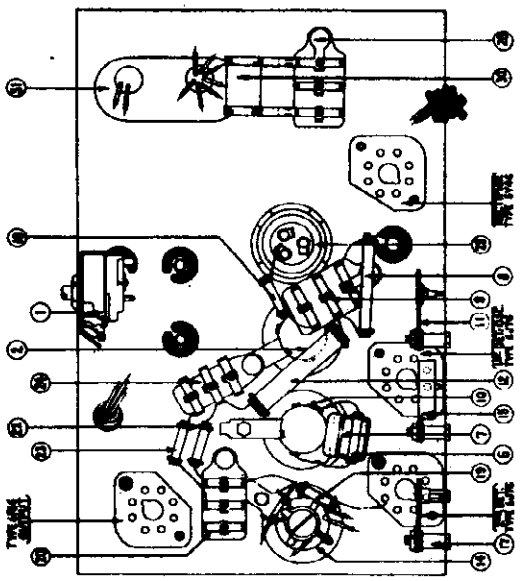

Fig. 3. Base view of Chassis

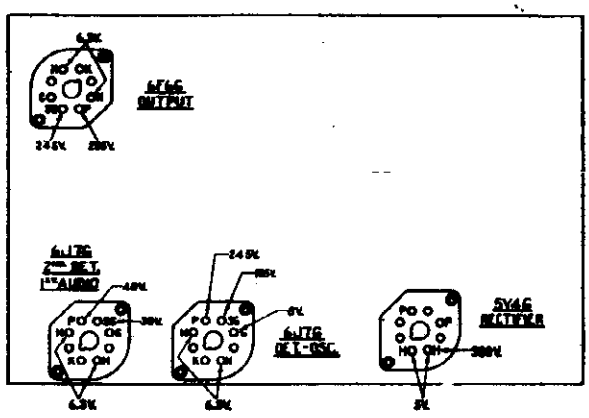

TUBE SOCKET VOLTAGES
(Measured from Tube Contact to Chassis)

Fig. 2. Tubes as viewed from underside of Chassis

The voltages at the points indicated by the arrows above were obtained with a Philco type 025 Circuit Tester which contains a high resistance (1000 ohms per volt) voltmeter.

©John F. Rider, Publisher

PHILCO RADIO & TELEV. CORP.

MODEL 37-89
Schematic
Coils, Parts

Fig. 5—Schematic Diagram—Model 37-89

Replacement Parts Model 37-89

Schem. No.	Description	Part No.	List Price
1	Antenna Transformer	32-2127	80.80
2	Compensator	31-6100	.40
3	Tuning Condenser	31-1833	4.00
4	Condenser (.05 mfd. tubular)	30-4020	.20
5	Resistor (51000 ohms ½ watt)	33-351339	.20
6	Condenser (.05 mfd. tubular)	30-4020	.20
7	Condenser (410 mmfd.)	30-1000	.25
8	R. F. Transformer	32-2128	.60
9	Condenser Two Wire Twisted		
10	Compensator	31-6100	.40
11	Choke	32-2139	.35
12	Compensator	31-6101	.20
13	Osc. Transformer	32-2130	.65
14	Condenser (250 mmfd. mica)	30-1032	.20
15	Resistor (32,000 ohms ½ watt)	33-351389	.20
16	Resistor (1000 ohms, ½ watt)	33-210339	.20
17	Condenser (.05 mfd. tubular)	30-4123	.20
18	Resistor (20000 ohms, ½ watt)	33-320339	.20
19	1st I. F. Transformer	32-2100	1.50
20	2nd I. F. Transformer	32-2102	1.50
21	Condenser (110 mmfd. mica)	30-1031	.20
22	Condenser (.25 mfd. tubular)	30-4445	.20
23	Resistor (51000 ohms, ½ watt)	33-351334	.20
24	Resistor (700 ohm, ½ watt)	33-1220	.20
25	Condenser (110 mmfd. mica)	30-1031	.20
26	Volume Control	33-5157	1.00
27	Condenser (0.1 mfd. tubular)	30-4465	.25
28	Resistor (51000 ohms, 1 watt)	33-351439	.20
29	Resistor (20000 ohms, 2 watt)	33-320539	.30
30	Resistor (1 meg. ½ watt)	33-510339	.20
31	Resistor (1 meg. ½ watt)	33-510339	.20
32	Resistor (490000 ohms ½ watt)	33-449339	.20
33	Condenser (0.1 mfd. tubular)	30-4122	.20
34	Resistor (1 megohm, ½ watt)	33-510339	.20
35	Condenser (.015 mfd. tubular)	30-4358	80.20
36	Resistor (120000 ohms, ½ watt)	33-412339	.20
37	Condenser (110 mmfd. mica)	30-1031	.20
38	Condenser (.25 mfd. tubular)	30-4134	.35
39	Resistor (1 megohm, ½ watt)	33-510339	.20
40	Resistor (120000 ohms, ½ watt)	33-412339	.20
41	Condenser (.015 mfd. tubular)	30-4226	.20
42	Output Transformer	32-7019	.85
43	Cone & Voice Coil	36-3157	.80
44	Condenser (.02 mfd. bakelite)	8318-SU	.35
45	Condenser (.008 mfd. tubular)	30-4112	.20
46	Field Coil & Pot Assembly	36-3664	
47	Condenser (.05 mfd. tubular)	30-4020	.20
48	Electrolytic Condenser (12 mfd.)	30-2117	1.20
49	Electrolytic Condenser (8 mfd.)	30-2024	1.10
50	Bias Resistor (245 ohms, Tape 35 and 43 ohms)	33-3277	.20
51	Power Transformer (115 volt, 50 to 60 cycle)	32-7683	4.25
52	Tone Control & A. C. Switch	42-1180	.75
53	Pilot Lamp	34-2089	.15
54	Condenser (.015, 015 mfd. bakelite)	3795-DG	.40
55	Wave Switch	42-1194	.60
56	Dial	27-6204	.35

PRICES SUBJECT TO CHANGE WITHOUT NOTICE June 1936

	Support Locking Plate	28-3589	.02
	Screw	W-644	Per C 1.60
.10	Knobs Tuning	27-4321	.10
.10	Knob Volume, Wavewitch, Tone	27-4322	.10
.25	Baffle Silk Assembly B, Cabinet	40-5925	.75
Per C .40	Baffle Silk Assembly F, Cabinet	40-6933	
	Speaker S-16	36-1226	5.75
.35	Screw Speaker Mtg	W-1604	Per C .50
Per C .40	Lockwasher Speaker Mtg	W-2	Per C .40
Per C 1.25	Washer Speaker Mtg	W-410	Per C .15
Per C .50	Nut Speaker Mtg	W-124	Per C .35
.10	Screw Chassis Mtg		
Per C50.40	Washer Chassis Mtg	28-2089	Per C .20
.02	Bezel Frame & Plate	40-6933	.10
Per C 1.50	Bezel Gasket	27-8311	.01
.08	Bezel Glass	27-8306	.06
.04	Bezel Ring	28-3967	.35
.01	Bezel Screw	W-1644	Per C .50
Per C .40	Bottom Shield Plate F, Cabinet		
Per C .45	I. F. Coil Shield	38-7763	.20
.01	Speaker 516 B, F Cabinets	36-1226	
.10	Support Locking Plate	28-3976	
.01			

©John F. Rider, Publisher

©John F. Rider Publisher

Electrical Specifications

Type of Circuit: Superheterodyne. Pentode Power Output.

Power Supply: 115 volts A. C. 50 to 60 or 25 to 40 cycles.

Power Consumption: 65 Watts.

Philco Tubes Used: 2 type 6K7G, R. F. and I. F. Circuit; 1 type 6A8G, Detector Oscillator; 1 type 6Q7G, 2nd Detector, A. V. C., and 1st Audio; 1 type 6F6G, Output and 1 type 5Y4G, Rectifier.

Intermediate Frequency: 470 K. C.

Tuning Ranges: Two. Range 1—530 to 1650 K. C. Range 2—1500 to 3700 K. C.

Speaker: S-16.

Power Output: 3 watts.

Aerial Connections: The Philco ALL Wave Aerial is recommended for use with this receiver, to obtain maximum sensitivity and noise reduction. The red and black leads of the "transmission line" (lead-in) are connected to terminals 1 and 2 respectively on the terminal panel provided at the rear of the chassis. Connect the link provided on the terminal panel across terminals 3 and 4.

If a temporary aerial is used, the link is connected across terminals 2 and 3, the aerial connects to terminal 1.

A good ground connection is desirable in all installations. Make the ground connection from the nearest water or radiator pipe to terminal 3 on the terminal panel.

Adjusting Compensator

To accurately adjust this receiver, precision test equipment is necessary. A signal generator such as the PHILCO MODEL 088 Signal Generator, covering from 110 to 20,000 K. C. is recommended for use in adjusting the compensators at the various frequencies specified. A visual indication of the receiver output is also necessary to obtain correct adjustment of the compensators. PHILCO MODEL 025 Circuit Tester contains a sensitive output meter and is recommended for these adjustments.

Philco Fibre Wrench No. 3164 and Fibre Handle Screw-Driver No. 27-7059 complete the necessary equipment for these adjustments. The locations of the various compensators are shown in Figs. 2 and 3.

The following procedure must be observed in adjusting the compensators:

DIAL ADJUSTMENT—The tuning condenser is set at the maximum capacity position, by turning the tuning knob clockwise. Loosen the set screw of dial hub and set dial, with Glowing Indicator centered between the first and second index lines at the low frequency end of scale.

OUTPUT METER—The 025 Output Meter is connected to the plate and cathode terminals of the 6F6G tube. Adjust the meter to use the (0-30) volt scale.

During the I. F. and R. F. adjustment, the signal generator output should be maintained at the lowest possible level that will give an indication on the output meter.

INTERMEDIATE FREQUENCY CIRCUIT

1. Turn selector switch to range 1 (counter-clockwise). Rotate the tuning control to approximately 600 K. C. Connect the 088 Signal Generator output lead through a .1 mfd. condenser to the grid of the 6A8G tube and the output ground lead to the receiver chassis.

2. Set signal generator dial indicator for 470 K. C. Adjust attenuator for approximately ½ scale reading on output meter. Then adjust compensators (20s) 2nd I. F. Sec., (20p) 2nd I. F. Pri., (19s) 1st I. F. Sec., and (19p) 1st I. F. Pri. for maximum reading on output meter.

RADIO FREQUENCY CIRCUIT

Tuning Range 1—530-1650 K. C.

1. Leave selector switch in range 1. Remove the signal generator output lead and .1 mfd. condenser from the grid of the 6A8G tube

2. Attach the signal generator output lead through the .1 mfd. condenser to the antenna terminal No. 1 on the aerial panel and the generator ground lead to terminal 3. Connect Terminal No. 2 to ground Terminal No. 3 with connector link provided on the panel.

3. Set signal generator and receiver dials for 1500 K. C. Now adjust compensators ⑳ Osc. (screw), ⑱ R. F., and ⑲ Ant. for maximum reading on output meter.

4. The low frequency end of the band is now tuned by turning signal generator and receiver dials to 600 K. C. and adjusting compensator ⑫a (see note A below) for maximum output.

(A) When compensator ⑫a Osc. series (nut) is being adjusted, the tuning condenser must be rolled for maximum output. This is accomplished as follows: First tune compensator ⑫a for maximum output at 600 K. C. Then vary the tuning condenser back and forth about the 600 K. C. dial mark for the maximum output point. Now retune compensator ⑫a and again varying the tuning condenser back and forth about 600 K. C. until the maximum output point is reached. This operation of first tuning the compensator, then the tuning condenser is continued until the maximum output is obtained at the 600 K. C. frequency.

5. Turn signal generator and receiver tuning dials to 1500 K. C., then readjust compensators ⑳ Osc.; ⑱ R. F.; ⑲ Ant. for maximum reading on output meter.

Tuning Range 2:

1. The compensating condenser adjustments of Band 1, takes care of Band 2, therefore no compensating condensers are required on the band.

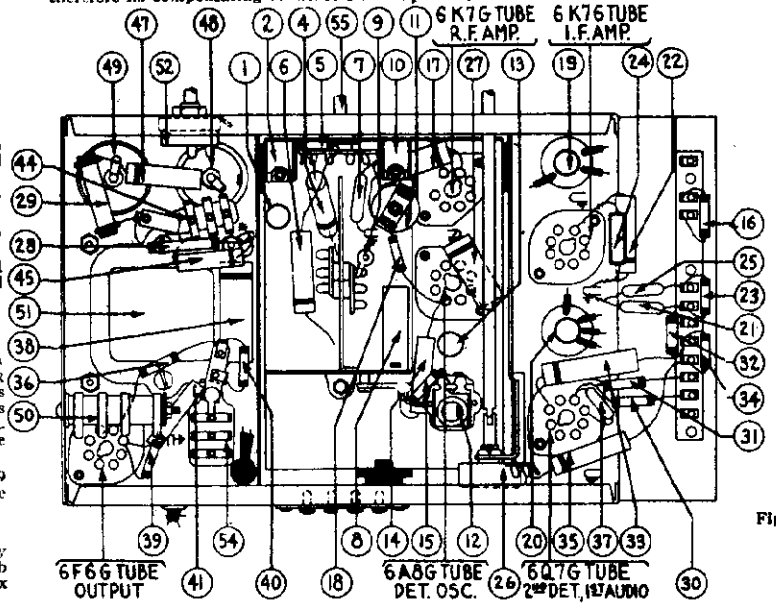

Fig. 4—Base View Chassis

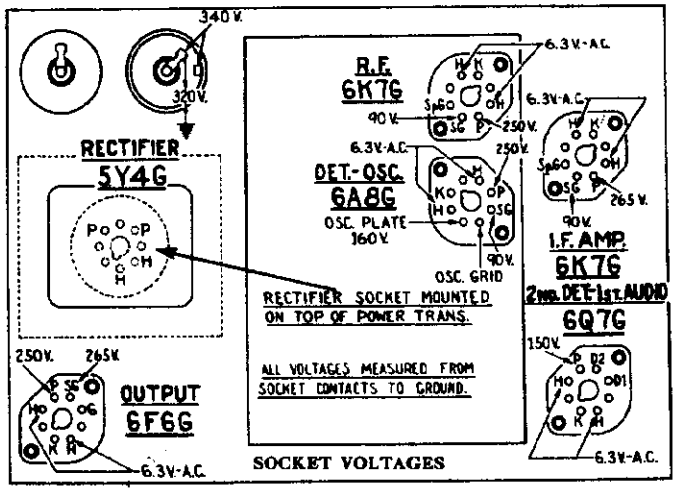

Fig. 1. View of Sockets from Underside Chassis

The voltages indicated by arrows were measured with a **Philco 025 Circuit Tester** which contains a voltmeter having a resistance of 1000 ohms per volt. Volume Control at minimum, range switch in broadcast position, line voltage 115 A. C.

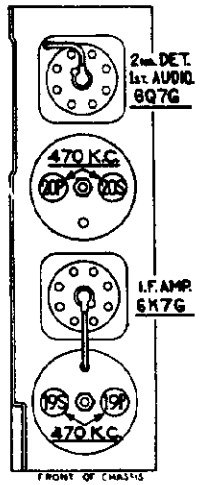

Fig. 2—I. F. Compensator

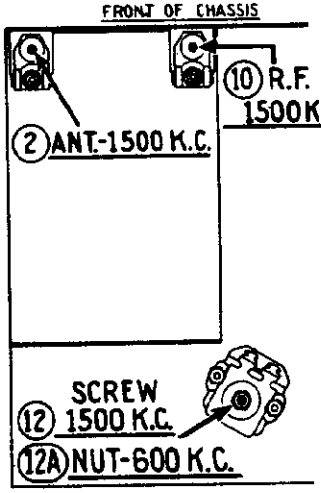

Fig. 3—R. F. Compensators

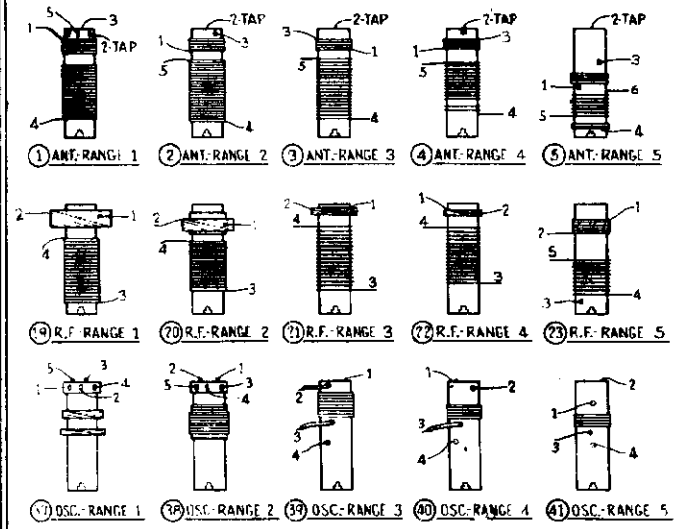

Fig. 5—Coil Wiring

The numbers on the coil leads correspond to those shown on the schematic diagram. For example: On Antenna transformer (1) lead No. 1 is connected to range switch wafer contact A6.

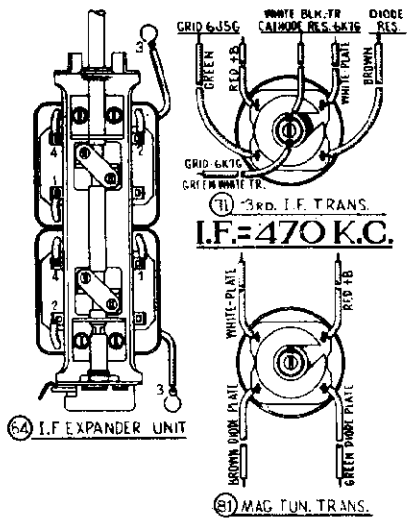

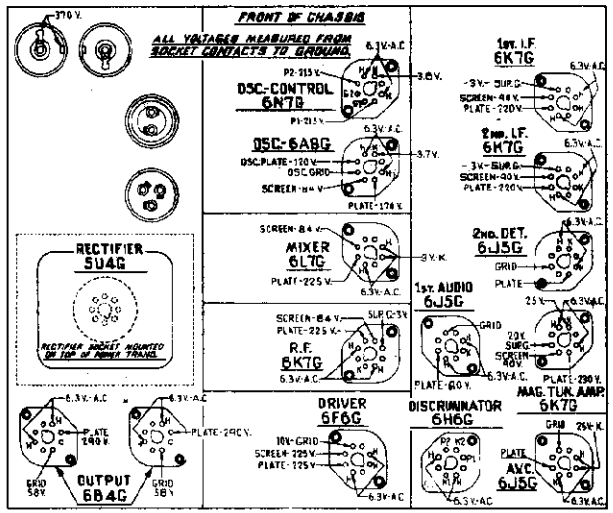

Fig. 2—Socket Voltages, Measured from Underside of Chassis

The voltages indicated by arrows were measured with a **Philco 625 Circuit Tester** which contains a voltmeter having a resistance of 1000 ohms per volt. Volume Control at minimum, range switch in broadcast position, line voltage 115 A. C.

HUM ADJUSTMENT

With Volume control at minimum volume position, adjust Potentiometer (128) on power unit for minimum hum.

SHADOWMETER ADJUSTMENT
Code 121

Remove aerial and allow tubes to warm up. Then adjust shadow meter as follows:

1. Move the shadow meter coil backwards and forwards, until the opposite edges of the shadow are ⅛ of an inch from each end of the shadow screen, measuring along the bottom edge of the screen. Adjustment of the shadow meter light bracket may be necessary for perfect centering.

2. Remove the rectifier tube from its socket, and rotate coil until shadow reaches minimum width. This width must not exceed ⅜ of an inch.

3. Replace the 5U4G rectifier tube in its socket. The shadow should then widen to not more than ¼ inch or less than ⅛ inch from each side of the screen measuring along the bottom edge. If these limits are not obtained readjust the shadow meter as given in paragraphs 1 and 2 until they are reached.

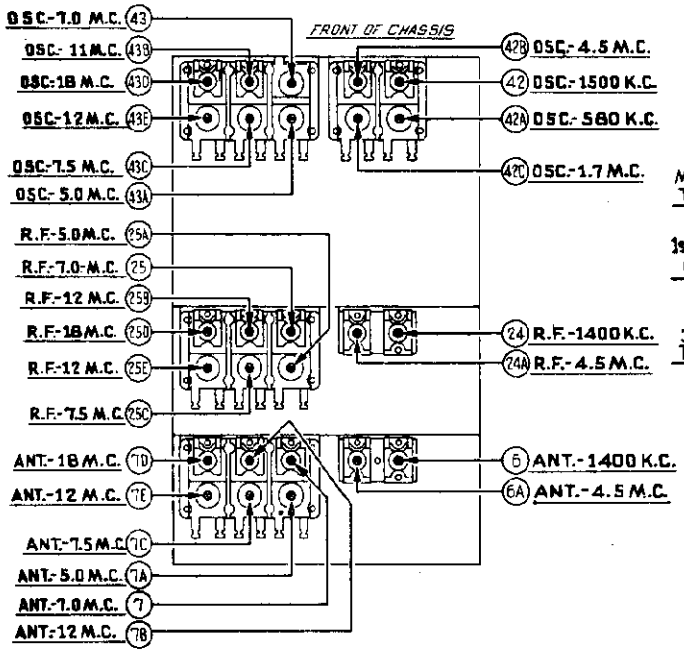

Fig. 8—Locations of R.F. Compensators
Underside of Chassis View

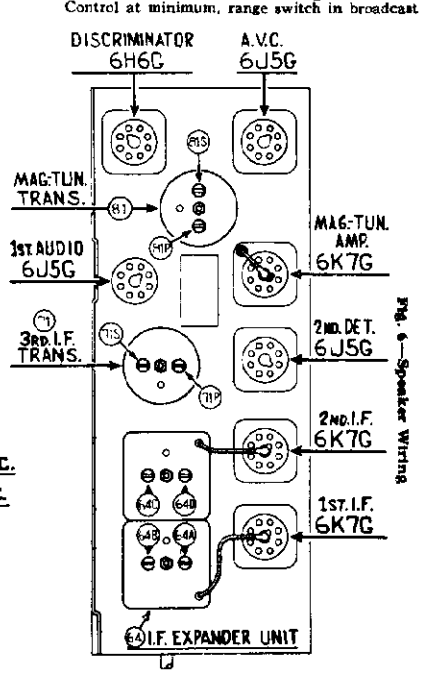

Fig. 7—Locations of I.F. Compensators

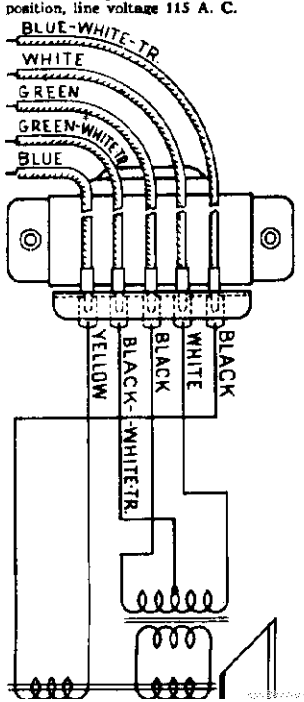

Fig. 6—Speaker Wiring

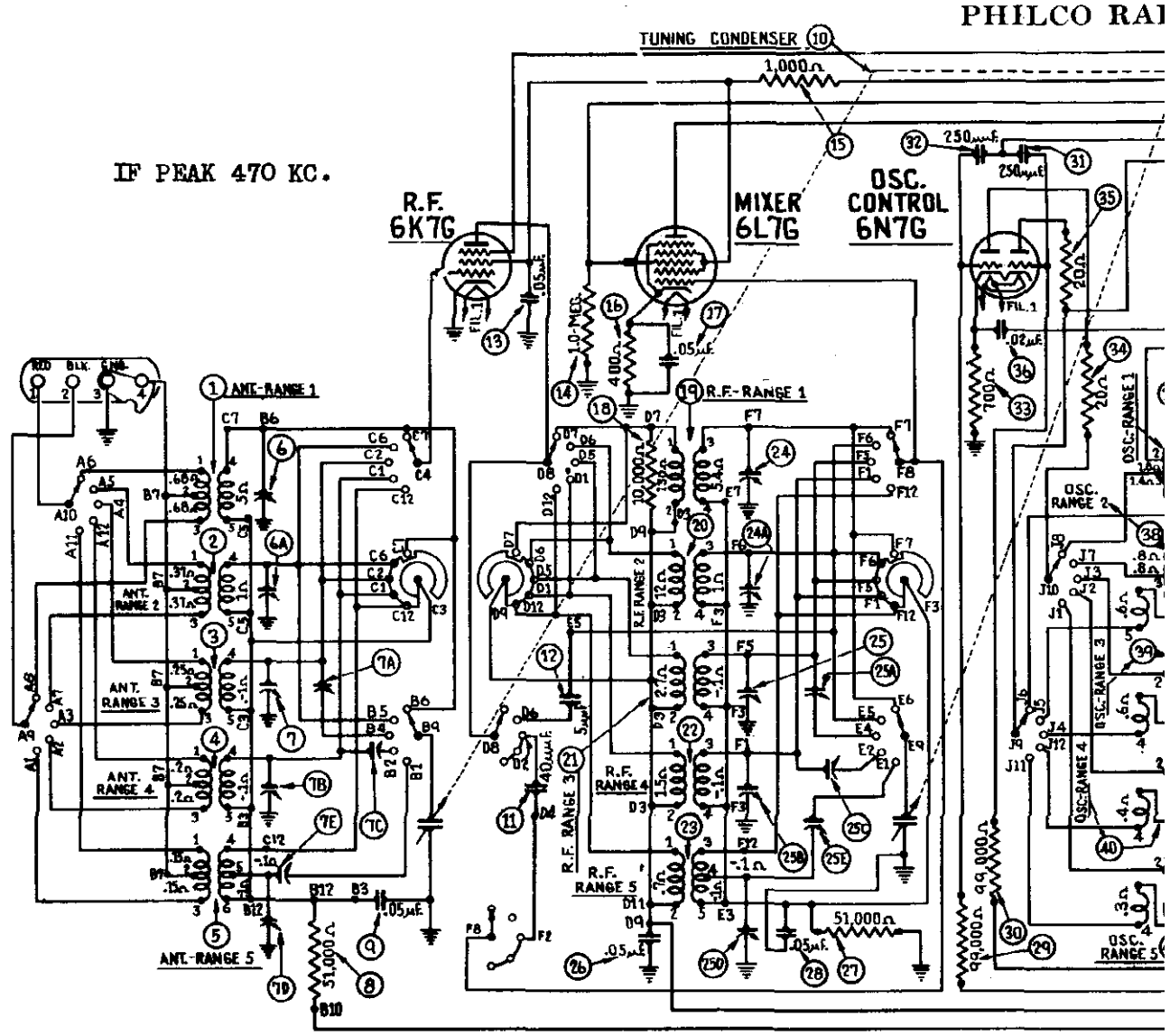

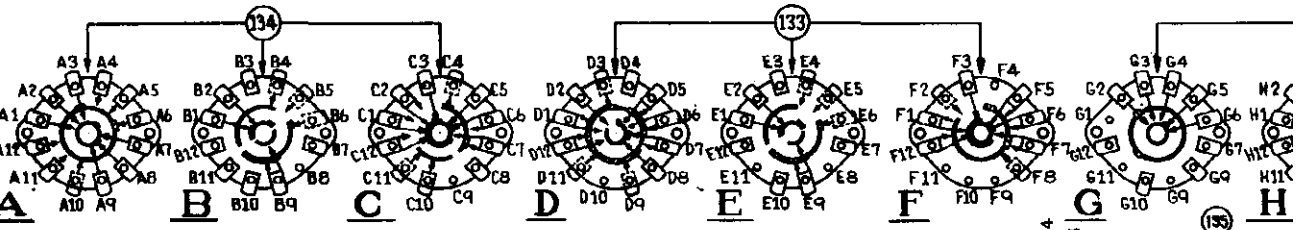

NOTE

LETTERS INDICATE POSITION OF SWITCH WAFERS FROM REAR UNDERSIDE VIEW OF CHASSIS.

ALL SWITCHES SHOWN IN POSITION No. 1 (BROADCAST.

SOLID AREA INDICATES REAR OF SWITCH WAFER.

SHADED AREA INDICATES FRONT OF SWITCH WAFER.

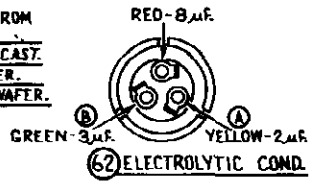

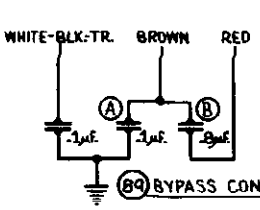

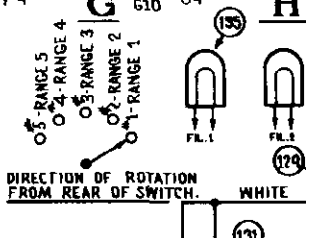

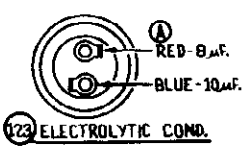

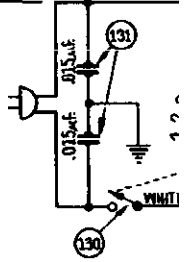

Type Circuit: Superheterodyne, with magnetic tuning; Fidelity-Selectivity control in the intermediate frequency circuit and pushpull class "A" audio output. The Code 122 Receiver uses the Philco Automatic Dial tuning system.

Power Supply: 115 Volts A.C. 50 to 60 cycles. For 25 to 40 cycle operation use power transformer listed in the parts list for this purpose.

Power Consumption: 165 Watts.

Intermediate Frequency: 470 K. C.

Undistorted Output: 15 Watts.

©John F. Rider, Publisher

ELEV. CORP.

MODEL 37-116(Codes 121,122)
Schematic

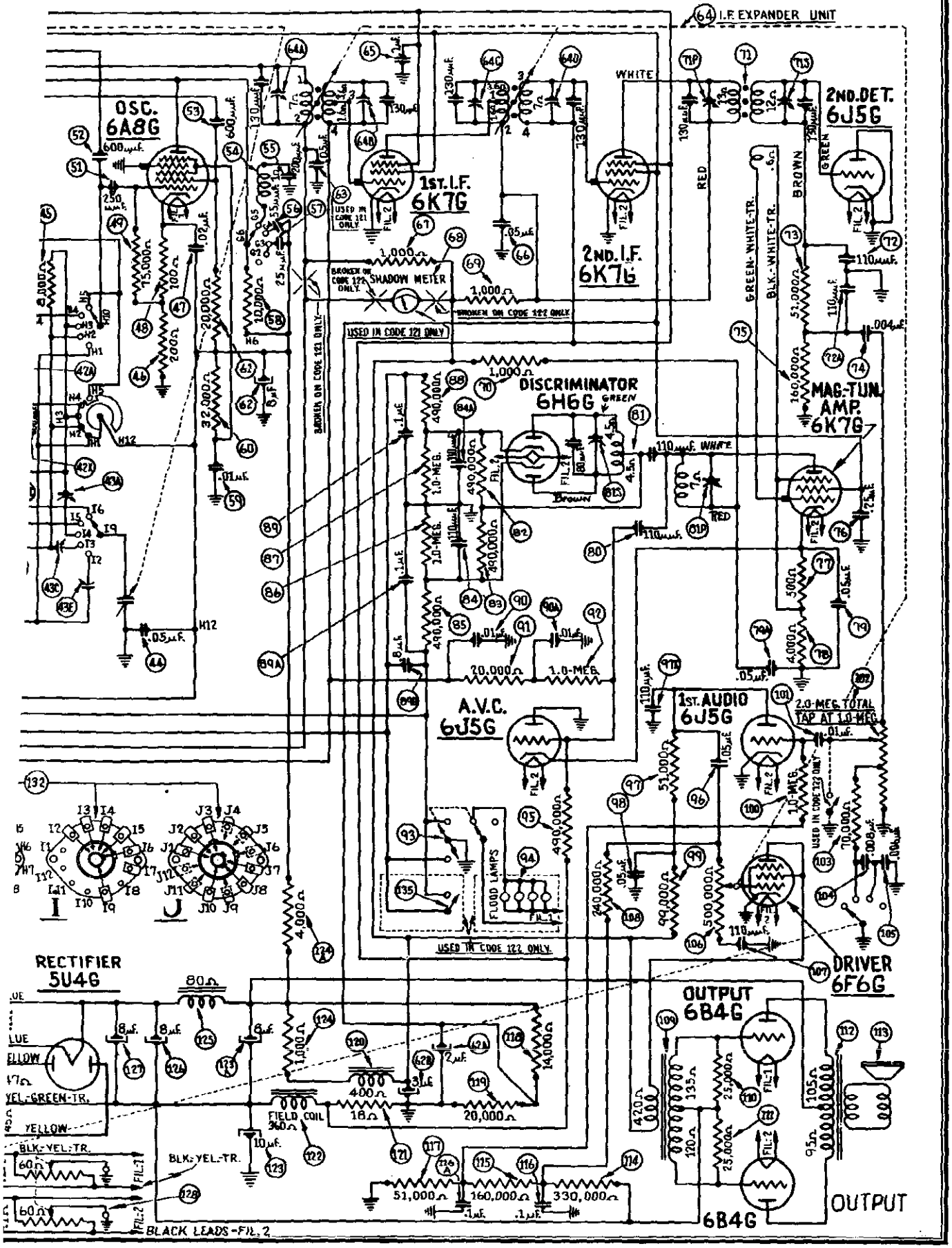

PHILCO RADIO & TELEV. CORP.

MODEL 37-116(Codes 121,12
Coils,Voltage,Trimmers,No

Fig. 2—Socket Voltages, Measured from Underside of Chassis

The voltages indicated by arrows were measured with a Philco #25 Circuit Tester which contains a voltmeter having a resistance of 1000 ohms per volt. Volume Control at minimum, range switch in broadcast position, line voltage 115 A. C.

Fig. 6—Speaker Wiring

Fig. 5—Coil Wiring

The numbers on the coil leads correspond to those shown on the schematic diagram. For example: On Antenna transformer (1) lead No. 1 is connected to range switch wafer contact A6.

HUM ADJUSTMENT

With Volume control at minimum volume position, adjust Potentiometer (128) on power unit for minimum hum.

SHADOWMETER ADJUSTMENT

Code 121

Remove aerial and allow tubes to warm up. Then adjust shadow meter as follows:

1. Move the shadow meter coil backwards and forwards, until the opposite edges of the shadow are ¼ of an inch from each end of the shadow screen, measuring along the bottom edge of the screen. Adjustment of the shadow meter light bracket may be necessary for perfect centering.

2. Remove the rectifier tube from its socket, and rotate coil until shadow reaches minimum width. This width must not exceed 1/16 of an inch.

3. Replace the 5U4G rectifier tube in its socket. The shadow should then widen to not more than ¼ inch or less than 1/16 inch from each side of the screen measuring along the bottom edge. If these limits are not obtained readjust the shadow meter as given in paragraphs 1 and 2 until they are reached.

PHILCO RADIO & TELEV. CORP.

MODEL 37-116(Codes 121,122)
Alignment

To accurately adjust this receiver, precision test equipment is necessary. A signal generator such as the PHILCO MODEL 088 SIGNAL GENERATOR, covering from 110 to 20,000 K. C. is recommended for adjusting the compensators at the various frequencies specified. A visual indication of the receiver output is also necessary to obtain correct adjustment of the compensators. PHILCO MODEL 025 CIRCUIT TESTER contains a sensitive output meter and is recommended for these adjustments.

Philco Fibre Handle Screw-driver No. 27-7059 completes the necessary equipment for these adjustments. The locations of the various compensators are shown in Figs. 7 and 8.

NOTE—The receiver should be allowed to heat for at least 15 minutes before adjusting the compensators.

OUTPUT METER

The 025 Output Meter is connected to the plate and cathode terminals of the 6F6G tube. Adjust the meter to use the (0-30) Volt Scale.

DIAL CALIBRATION

In order to adjust this receiver correctly the dial must be aligned to track properly with the tuning condenser. To do this proceed as follows:

1. Loosen the set screws on the shaft coupling of the tuning condenser. Then turn the tuning condenser until the plates are in the maximum capacity position. Now set the glowing beam indicator on the index line at the low frequency end of the broadcast band. With dial and tuning condenser in this position tighten set screws.

2. Turn the tuning condenser control until the indicator is on the first division from the index line.

3. With the dial in this position, loosen the shaft coupling set screws. Then turn the dial until the indicator is again on the index line. Tighten the set screws in this position.

NOTE: Be careful when turning the dial that the position of the tuning condenser is not disturbed.

INTERMEDIATE FREQUENCY CIRCUIT

Frequency 470 K. C.

1. Connect the 088 Signal Generator output lead in series with a .1 mfd. condenser to the grid of the 6L7G tube, and the ground connection of the output lead to the chassis.

2. Set the receiver volume control in the maximum position. Turn the fidelity-selectivity control clockwise; magnetic tuning control in the "off" position (counter-clockwise); range switch in position No. 1 (Broadcast); tuning condenser to approximately 580 K. C., and adjust the signal generator for 470 K. C.

3. Now adjust compensators (64B) 1st I.F. Sec., (64A) 1st I.F. Pri., (64D) 2nd I.F. Sec., (64C) 2nd I.F. Pri., (71S) 3rd I.F. Sec., and (71P) 3rd I.F. Pri. for maximum output.

4. Turn the fidelity-selectivity control to the expanded position (counter-clockwise). The intermediate frequency curve is now checked for symmetry as follows: Slowly shift the signal generator dial between 460 K. C. and 480 K. C. As the dial is turned two peaks will be indicated on the output meter—one about 465 K. C., and the other about 475 K. C. These peaks should give the same deflection or reading on the output meter. If they are unequal, compensator (71S) must be readjusted slightly to the right or left—depending on which peak gives the lowest reading—until they are equalized.

Each time the compensator is set in another position, rotate the signal generator dial through 460 to 480 K. C. and note the reading of each peak on the output meter. If the peaks become more equal when compensator (71S) is turned to the left, continue in this direction until they are equal. If they become more unequal turn the compensator to the right. Continue this adjustment in either direction until the peaks equalize.

5. After adjusting the third I.F. transformer, turn the fidelity-selectivity control clockwise (selective position) and adjust the attenuator of the signal generator for maximum output. Now tune the primary compensator (81P) of the magnetic tuning transformer for minimum output.

RADIO FREQUENCY CIRCUIT

Tuning Range 11.5-18.2 M. C.

1. The signal generator output lead with the .1 mfd. condenser, is connected to terminal No. 1 on the aerial input panel (rear of chassis) and the generator ground lead to terminal No. 3. Terminals 2 and 3 must be connected with the shorting link provided on the panel.

2. Set the magnetic tuning control in the "off" position, and the fidelity-selectivity control in the extreme clockwise position. Set the range switch in position No. 5 (11.5 to 18.2 M. C.) Turn the receiver and signal generator dials to 18 M. C. and adjust the generator attenuator for a readable indication on the output meter. Now adjust compensator (43D) by turning the screw (clockwise) to the maximum capacity position, then slowly turn it counter-clockwise until a second maximum peak is reached on the output meter. The first peak from maximum capacity is the image signal and the receiver *must not* be adjusted to this signal. On some receivers, however, only one peak will be found, therefore, adjust compensator (43D) to this peak. If the above procedure is correctly performed, the image signal will be found at 17.060 M. C. by advancing the signal generator input, and turning the receiver dial to this frequency mark on the scale.

3. Leaving the signal generator and receiver dials at 18 M. C. the antenna and R. F. compensators (7D) and (25D) are now adjusted by connecting a variable condenser (Philco Part No. 45-2325) across the oscillator compensator (43D) contact (first contact from the left side of the receiver facing rear underside view of the chassis) and ground. Now tune the added condenser until the second harmonic of the receiver oscillator beats against the signal from the generator, resulting in a maximum indication on the output meter. Note: It may be necessary to increase the signal generator output to obtain a signal of sufficient strength for reading on the output meter. Compensators (7D) and (25D) are now adjusted for maximum output. After these adjustments, remove the external condenser and readjust compensator (43D) as given in paragraph 2 above.

4. Turn the signal generator and receiver dials to 12 M. C. and adjust compensators (43E), (25E) and (7E) for maximum output.

5. Readjust compensator (43D) as given in paragraph 2 above, for maximum output.

6. Readjust compensators (7D), (25D) and (43D) as given in paragraph 3 above. This readjustment is to correct any variation that the low frequency compensator may have caused in the high end of this range.

Tuning Range (7.35-11.6 M. C.)

1. Turn selector switch to Range 4. Set the signal generator and receiver dials to 11.0 M. C. Now adjust compensator (43B) for maximum output. Check for image at 10.06 M. C.

2. Leaving signal generator and receiver dial turned to 11.0 M. C., connect the external variable condenser across the oscillator compensator (43B) contact (third contact from left side of the receiver facing rear underside view of chassis) and ground. Tune the added condenser for maximum output, then adjust compensators (7B) and (25B) for maximum output. Remove the added condenser and adjust (43B) for maximum.

3. Turn the signal generator and receiver dials to 7.5 M. C. and adjust compensators (43C), (25C) and (7C) for maximum output.

4. Readjust compensator (43B) as given in paragraph 1 above.

5. Readjust compensators (7B), (25B) and (43B) as given in paragraph 2 above.

Tuning Range (4.7 to 7.4 M. C.)

1. Turn selector switch to range 3. Set the signal generator and receiver dials for 7.0 M. C. and adjust compensators (43), (25) and (7) for maximum output.

2. Rotate the signal generators and receiver dials to 5.0 M. C., then adjust compensators (43A), (25A) and (7A) for maximum output.

3. Readjust compensators (43), (25) and (7) on the 7.0 M. C. signal.

Tuning Range (1.58 to 4.75 M. C.)

1. Turn the selector switch to range 2. Set the signal generator and receiver dials to 4.5 M. C. Now adjust compensators (42B), (24A) and (6A) for maximum output.

2. Rotate the signal generator and receiver dials to 1.7 M. C. Compensator (42C) Osc. series is now adjusted for maximum output as follows.

First tune compensator (42C) for maximum output, then vary the tuning condenser of the receiver for maximum output about the 1.7 M.C. dial mark. Now turn compensator (42C) slightly to the right or left and vary the receiver tuning condenser for maximum output. If the output reading increases, turn compensator (42C) in the same direction a trifle more, and again vary the tuning condenser for maximum output. If the output decreases, set the compensator in the opposite direction. This procedure of first setting the compensator and then varying the tuning condenser is continued until there is no further gain in output reading.

3. Readjust compensators (42B), (24A) and (6A) for maximum output as given in paragraph 1 above.

Tuning Range (530 to 1600 K. C.)

1. Set selector switch in range 1. Rotate the signal generator and receiver dial to 1500 K. C. Adjust compensators (42), (24) and (6) for maximum output.

2. Turn the signal generator and receiver dials to 580 K. C. Compensator (42A) Osc. series is now adjusted, using the same procedure as given in paragraph 2 under Tuning Range (1.58 to 4.75 M. C.). The only difference in the two adjustments is the frequency and compensator used.

3. Readjust compensator (42) on 1500 K. C. and compensators (24) and (6) on a 1400 K. C. signal.

ADJUSTMENT OF THE MAGNETIC TUNING CONTROL

1. Leave the selector switch in position 1. Set the fidelity-selectivity control in the "selective" position (clockwise). Magnetic tuning in the "out" position. Turn the signal generator and dial to 1000 K. C., then adjust the receiver tuning condenser for maximum output.

NOTE: It is very important to accurately adjust the receiver tuning condenser, also, adjust the signal generator attenuator to maximum output.

2. Turn the (Magnetic Tuning Control) to the "on" position (clockwise). Compensator (81S) Sec. of magnetic tuning transformer is now adjusted for maximum output. If the indicator of the output meter goes off scale, turn the volume control of the receiver toward the minimum position until a readable indication is obtained.

3. The above adjustment is now checked for accuracy, by turning the magnetic tuning control "off". When this is done there should be no change in the tone of the receiver signal. If a change of tone or a hiss develops, it indicates a shift in frequency and the adjustment must be made again.

©John F. Rider, Publisher

MODEL 37-116(Codes 121,122)
Parts List

PHILCO RADIO & TELEV. CORP.

Replacement Parts—Model 37-116

Schem. No.	Description	Part No.	List Price
1	Antenna Transformer (Range 1)	32-2108	$0.80
2	Antenna Transformer (Range 2)	32-2146	.80
3	Antenna Transformer (Range 3)	32-2183	.80
4	Antenna Transformer (Range 4)	32-2185	.70
5	Antenna Transformer (Range 5)	32-2175	.80
6	Compensator, 2 Gang	31-6093	.40
7	Compensator (6 Sections)	31-6112	1.40
8	Resistor (51000 ohms ½ watt)	33-351339	.20
9	Condenser (.05 mfd. Tubular)	30-4020	.20
10	Tuning Condenser	31-1892	3.75
11	Condenser (40 mmfd.)	30-1076	....
12	Condenser (5 mmfd.)	30-1077	....
13	Condenser (.05 mfd. Tubular)	30-4123	.20
14	Resistor (1 megohm, ½ watt)	33-510339	.20
15	Resistor (1000 ohms, ½ watt)	33-210339	.20
16	Resistor (400 ohms wirewound)	33-3016	.20
17	Condenser (.05 mfd. Tubular)	30-4444	.20
18	Resistor (10000 ohms, ½ watt)	33-310339	.20
19	R. F. Transformer (Range 1)	32-2105	.75
20	R. F. Transformer (Range 2)	32-2147	.60
21	R. F. Transformer (Range 3)	32-2177	.60
22	R. F. Transformer (Range 4)	32-2178	.60
23	R. F. Transformer (Range 5)	32-2176	.70
24	R. F. Compensator (2 Section)	31-6093	.40
25	R. F. Compensator (6 Section)	31-6113	1.40
26	Condenser (.05 mfd. Tubular)	30-4123	.20
27	Resistor (51000 ohms, ½ watt)	33-351339	.20
28	Condenser (.05 mfd. Tubular)	30-4020	.20
29	Resistor (99000 ohms, ½ watt)	33-399339	.20
30	Resistor (99000 ohms, ½ watt)	33-399339	.20
31	Condenser (250 mmfd. Mica)	30-1032	.25
32	Condenser (250 mmfd. Mica)	30-1032	.25
33	Resistor (700 ohms Wirewound)	33-170339	.20
34	Resistor (20 ohms, ½ watt)	33-200339	.20
35	Resistor (20 ohms, ½ watt)	33-200339	.20
36	Condenser (.02 mfd. Tubular)	30-4451	....
37	Oscillator Transformer (Range 1)	32-2191	.80
38	Oscillator Transformer (Range 2)	32-2194	.80
39	Oscillator Transformer (Range 3)	32-2197	.50
40	Oscillator Transformer (Range 4)	32-2198	.50
41	Oscillator Transformer (Range 5)	32-2199	.50
42	Compensator Oscillator (4 Section)	31-6124	1.00
42X	Condenser (600 mmfd.)	30-1049	....
43	Compensator Oscillator (6 Section)	31-6117	1.20
44	Condenser (.05 mfd. Tubular)	30-4123	.20
45	Resistor (8000 ohms, ½ watt)	33-280339	.20
46	Resistor (200 ohms Wirewound)	7217	.20
47	Condenser (.02 mfd. Tubular)	30-4481	.20
48	Resistor (100 ohms Wirewound)	33-3023	.25
49	Resistor (75000 ohms, ½ watt)	33-375339	.20
50	Resistor (20000 ohms, ½ watt)	33-320339	.20
51	Condenser (250 mmfd. Mica)	30-1032	.25
52	Condenser (600 mmfd. Mica)	30-1049	.25
53	Condenser (600 mmfd. Mica)	30-1049	.25
54	Coil (Ant. Plate)	32-2242	.25
55	Condenser (200 mmfd. Mica)	30-1047	.25
56	Condenser (55 mmfd. Mica)	30-1045	.20
57	Condenser (25 mmfd. Mica)	30-1067	.20
58	Resistor (10000 ohms, ½ watt)	33-310339	.20
59	Condenser (.01 mfd. Tubular)	30-4169	.25
60	Resistor (32000 ohms, ½ watt)	33-332339	.20
61	Resistor (20000 ohms, ½ watt)	33-320339	.20
62	Electrolytic Condenser (2, 3, 8 mfd.)	30-2169	1.60
63	Condenser (.05 mfd. Tubular—Code 121 only)	30-4123	....
64	Expander Unit	38-7929	....
65	Condenser (.1 mfd. Bakelite)	4989DG	.35
66	Condenser (.05 mfd. Tubular)	30-4123	.20
67	Resistor (1000 ohms, ½ watt)	33-210339	.20
68	Shadowmeter	45-2189	....
69	Resistor (1000 ohms, ½ watt)	33-210339	.20
70	Resistor (1000 ohms, ½ watt)	33-210339	.20
71	Third I. F. Transformer	32-2215	....
72	Condenser (110 mmfd. Dual Bakelite)	8035DG	.25
73	Resistor (51000 ohms, ½ watt)	33-351339	.20
74	Condenser (.004 mfd. Tubular)	30-4185	.25
75	Resistor (160,000 ohms, ½ watt)	33-416339	.20
76	Condenser (.25 mfd. Tubular)	30-4134	.25
77	Resistor (500 ohms, ½ watt)	33-150339	.20
78	Resistor (4000 ohms, ½ watt)	33-240339	.20
79	Condenser (.05 mfd. Dual Bakelite)	3615DG	.40
80	Condenser (110 mmfd. Mica)	30-1031	.20
81	Magnet Tuning Transformer	32-2217	....
82	Resistor (490,000 ohms, ½ watt)	33-449339	.20
83	Resistor (490,000 ohms, ½ watt)	33-449339	.20
84	Condenser (110 mmfd. Dual Bakelite)	8035DG	.25
85	Resistor (490,000 ohms, ½ watt)	33-449339	.20
86	Resistor (1 meg. ohm, ½ watt)	33-510339	.20
87	Resistor (1 meg. ohm, ½ watt)	33-510339	.20
88	Resistor (490,000 ohms, ½ watt)	33-449339	.20
89	Condenser (Three section .1, .1, .8 mfd.)	30-4464	1.40
90	Condenser (.01 mfd. Dual Bakelite)	3603DG	.30
91	Resistor (20,000 ohms, ½ watt)	33-320339	.20
92	Resistor (1.0 meg., ½ watt)	33-510339	.20
93	Switch (Mag. Tuning)	42-1218	.75
94	Flood Lamp (Code 122)	34-2039	....
95	Resistor (490,000 ohms, ½ watt)	33-449339	.20
96	Condenser (.05 mfd. Tubular)	30-4123	.20
97	Resistor (51,000 ohms, ½ watt)	33-351339	.20
97X	Condenser (110 mmfd. Mica)	30-1031	....
98	Condenser (.05 mfd. Tubular)	30-4123	.20
99	Resistor (99,000 ohms, ½ watt)	33-399339	.20
100	Resistor (1 meg., ½ watt)	33-510339	.20
101	Condenser (.01 mfd. Tubular)	30-4124	.25
102	Volume Control	33-5158	1.00
103	Resistor (70,000 ohms, ½ watt)	33-370339	.20
104	Condenser (.008 mfd. Tubular)	30-4113	.20
105	Condenser (.006 mfd. Tubular)	30-4445	.20
106	Potentiometer (Expander unit)	33-5172	....
107	Condenser (100 mmfd. Mica)	30-1035	....
108	Resistor (240,000 ohms, ½ watt)	33-424339	.20
109	Input Audio Transformer	32-7057	3.50
110	Resistor (25,000 ohms, ½ watt)	33-325339	.20
111	Resistor (25,000 ohms, ½ watt)	33-325339	.20
112	Output Transformer	32-7717	2.00
113	Cone and Voice Coil	36-3647	2.25
114	Resistor (330,000 ohms, ½ watt)	33-433339	.20
115	Resistor (160,000 ohms, ½ watt)	33-416339	.20
116	Condenser (.1 mfd. Dual Bakelite)	4989DG	.40
117	Resistor (51,000 ohms, ½ watt)	33-351339	.20
118	Resistor (14,000 ohms, ½ watt)	33-3291	....
119	Resistor (20000 ohms, 1 watt)	33-320439	$0.20
120	Choke (Filter)	32-7491	.95
121	Resistor (18 ohms, ½ watt)	33-020439	.20
122	Field Coil (W. Speaker)	36-3788	....
123	Electrolytic Condenser (8 and 10 mfd.)	30-2123	1.60
124	Resistor (1000 and 4000 ohms)	33-3289	.50
125	Choke (Filter)	32-7056	2.20
126	Electrolytic Condenser (8 mfd.)	30-2026	1.05
127	Electrolytic Condenser (8 mfd.)	30-2026	1.05
128	Potentiometer (Dual 60 ohms)	33-5176	....
129	Power Transformer 115 Volts, 60 Cycle	32-7688	7.50
	Power Transformer 115 Volts, 25 to 40 Cycle	32-7689	....
	Power Transformer, 220 Volts	32-7690	....
130	Power and Tone Switch	42-1196	.75
131	Condenser (.015 mfd. Dual Bakelite)	4989DG	.40
132	Range Switch (Osc)	42-1217	2.00
133	Range Switch (R. F.)	42-1212	1.60
134	Range Switch (Ant.)	42-1211	1.60
135	Pilot Lamp (Codes 121-122)	34-2039	.15
136	Shadowmeter Lamp (Code 121 only)	34-2039	.15

USED ON CODES 121-122

Dial Screen Holder Assembly	31-1900	.30
Coupling Assembly (Tuning Condenser)	31-1907	....
Screw	W-650	....
Set Screw	W-644	....
Brace (Drive Mtg.)	28-4119	.05
Volume Control Shaft	38-8061	....
Retaining Clip	28-4394	....
Spring	28-4117	Per C .40
Shaft & Index Plate (Range Switch)	42-1206	.50
Socket (8 Prong)	27-6058	.11
Socket (7 Prong)	27-6057	.11
Socket (Power Transformer)	27-6061	....
Tube Shield	28-2726	.10
Tube Shield Base	28-3908	.03
Tube Shield (6N7G)	8005	.10
Tube Shield Base (6N7G)	8004	.03
Mtg. Grommet (R. F. Unit)	27-4317	.04
Mtg. Sleeve (R. F. Unit)	28-2257	.01
Mtg. Screw (R. F. Unit)	W-729	Per C .45
Mtg. Spacer (R. F. Unit) Code 121	27-8339	Per C .40
Mtg. Spacer (R. F. Unit) Code 122	27-7807	....
Mtg. Washer	28-3927	.01
Mtg. Rubber Tuning Condenser	27-4385	....
Mtg. Spring Shadowmeter	28-8823	Per C .70
Mtg. Plate (R. F. Transformer)	28-3906	.03
Mtg. Spacer (R. F. Transformer)	27-8325	.01
Mtg. Screw (R. F. Transformer)	W-1635	Per C .30
Terminal Panel Antenna	38-7714	.15
Terminal Cover (Speaker)	36-3872	.15
Knob	27-4330	.10
Knob	27-4331	.10
Knob	27-4332	.10
Knob	27-4326	.10
Cable (Speaker)	41-3220	.50
A. C. Plug and Cord	L-2288	....
Fuses	45-2046	....
Chassis Mtg. Rubber	3558	....
Rubber Bushing (Small)	27-4359	....
Rubber Bushing (Large)	27-4360	....
Speaker, W	36-1219	....
Speaker, Felt	27-8498	....
Acoustic Clarifier (Type K)	36-1155	....
Bottom Shield	38-8142	....
Snap Fasteners	28-4279	....
Pilot Lamp Assembly	38-7909	.40

CODE 121

Dial	27-5249	.40
Hub	28-7187	.12
Clamp	28-2827	.10
Set Screw	W-1641	.02
Gear (Dial)	28-7185	.10
Gear Drive	31-1884	....
Thrust Spring	28-8611	.01
Thrust Washer	28-3976	Per C .30
C Washer	28-3904	.01
Mask	27-5206	.30
Mask Arm and Link Assembly	31-1899	.50
Mask Washer	27-8318	Per C .50
Mask Guide and Bracket	38-7876	.25
Drive Mounting Assembly	31-1901	....
Vernier Drive	31-1895	....
Bezel Frame and Plate Assembly (Cabinet)	40-5948	.80
Glass	27-8300	.06
Ring	28-3988	.45
Gasket	27-8313	.01

CODE 122

Auto Dial Tuning Assembly Complete	31-1886	....
Dial Scale	27-5207	....
Gasket (Dial Scale)	27-8398	....
Mask and Link Assembly	45-2328	....
Mask Guide	28-4118	....
Ring (Retaining Mask Assembly)	28-7195	....
Spring (Retaining Mask Assembly)	28-8629	....
Indexing Plunger	31-1898	....
Plunger Stop and Switch Assembly	45-2330	....
Range Switch Shaft Coupling	2R-7188	....
Felt Washer	27-8309	....
Washer	W-495	....
Snap Fastener	40-2212	....
Indexing Handle	38-8065	....
Handle Cover	38-8077	....
Set Screws	28-6403	....
Screws (Cover)	W-1660	....
Dial Escutcheon Assembly	45-2324	....
Flood Lamp Assembly	38-7937	....
Bezel Frame and Plate Assembly (Cabinet)	40-5980	....
Bezel Gasket	27-8317	....
Screw	W-490	....
Station Tab Kit	40-6012	....

Figures in black type indicate circled figures in Base View.

Prices Subject to Change without Notice.

©John F. Rider, Publisher

PHILCO RADIO & TELEV. CORP.

MODEL 37-600
Schematic
Socket, Trimmers
Parts List

Replacement Parts for Model 37-600

Schematic Number	Part and Description	Part No.	Price List
①	Volume Control	33-5152	$1.45
②	Condenser (35 Mmf. Mica)	30-1044	.20
③	Ant. Transformer	32-2144	1.40
④	Tuning Condenser	31-1794	3.00
⑤	Compensator (Det. K.C.)	Part of ④	...
⑥	Compensator (Osc. K.C.)	Part of ⑤	...
⑦	Resistor (300 ohm)	33-3010	.20
⑧	Condenser (.05 mf. Twin Bakelite)	3615-DG	.40
⑨	Resistor (4900 ohm, ½ watt)	33-249339	.20
⑩	Condenser (.09 mf. Twin Bakelite)	4989-DG	.40
⑪	Resistor (51,000 ohm, ½ watt)	33-351339	.20
⑫	Resistor (25,000 ohm, ½ watt)	33-325339	.20
⑬	Resistor (25,000 ohm, 1 watt)	33-325439	.20
⑭	Osc. Transformer	32-2043	1.20
⑮	Condenser (110 mmf. Mica)	30-1031	.20
⑯	Compensator (Osc. Series) (600 K.C.)	64000 S	.35
⑰	Resistor (25,000 ohm, ½ watt)	33-325339	.20
⑱	Compensator (I.F. Pri) (460 K.C.)	Part of ⑲	...
⑲	I.F. Transformer	32-2031	1.50
⑳	Compensator (I.F. Sec.) (460 K.C.)	Part of ⑲	...
㉑	Condenser (50 mmf. Mica)	30-1029	.20
㉒	Resistor (1.5 meg., ¼ watt)	33-515139	.20
㉓	Sensitivity Compensator	31-6086	.45
㉔	Condenser (.09 mf.)	Part of ⑩	...
㉕	Resistor (10,000 ohm, ¼ watt)	33-310339	.20
㉖	Resistor (240,000 ohm, ½ watt)	33-424339	.20
㉗	Condenser (.01 mf.)	30-4169	.20
㉘	Condenser (.00025 mf.) Mica	30-1032	.25
㉙	Resistor (750,000 ohm, ¼ watt)	33-475339	.20
㉚	Resistor (1.0 meg., ¼ watt)	33-510339	.20
㉛	Condensor (.02 mf.) (Tubular)	30-4113	.20
㉜	Output Transformer	32-7567	1.00
㉝	Voice Coil Conc Assy	36-3029	.60
㉞	Field Coil Assy	36-3609	2.50
㉟	Elec. Condenser (4 mf.)	30-2149	1.95
㊱	Resistor (300 ohm)	33-3121	.25
㊲	Condenser (.05 mf.)	Part of ⑧	...
㊳	Elec. Condenser (8.0 mf.)	Part of ㊴	...
㊴	Power Transformer (110 V., 60 Cycle)	32-7552	3.25
㊵	Condenser (.015 mf. Twin)	3793-DG	.40
㊶	Pilot Lamp (6.3 Volt)	34-2064	.09
	Power Transformer (230 V., 50-60 Cycle)	32-7554	...
	Power Transformer (110 V., 25 Cycle)	32-7553	5.75
	Tube Shield Body	28-2726	.10
	Tube Shield Base	28-3898	.03
	Tube Socket (7-prong)	27-6057	.11
	Tube Socket (8-prong)	27-6058	.11
	Tube Socket (5-prong)	27-6053	.11
	Volume Control Mtg. Nut	W-648-A	.20C
	Chassis Mtg. Screw	W-1656-A	.75C
	Chassis Mtg. Nut	W-124-A	.35C
	Chassis Mtg. Washer	W-151-A	.15C
	Chassis Mtg. Washer	W-291 A	.40C
	Baffle	40-5951	...
	Dial	27-5193	.15
	Knob (Station Selector)	27-4308	.10
	Knob (Volume, On-Off)	27-4309	.10
	Bottom Shield Assy.	29-3795	.40
	Bottom Shield Ins.	27-8122	.05
	Pointer	28-3789	.03
	Pilot Lamp Bracket Assy.	38-7529	.30
	A.C. Cord Assy.	L-2183	.40
	Speaker, B6	36-1205	6.00
	Aerial Lead	38-5144	.30

PRICES ARE SUBJECT TO CHANGE WITHOUT NOTICE

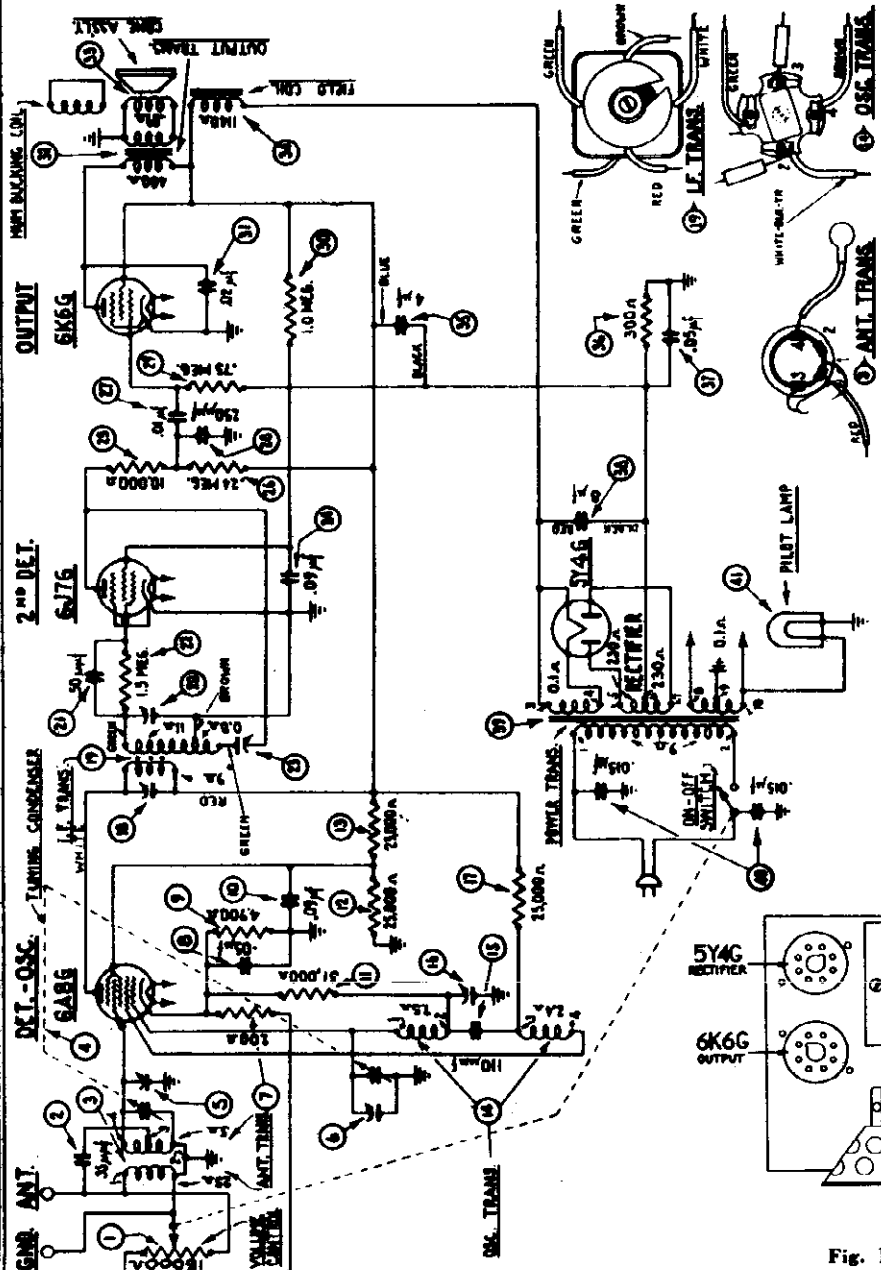

Fig. 4. Schematic Wiring Diagram

Specifications

TYPE CIRCUIT: Superheterodyne with pentode output.
POWER SUPPLY: 115 V., 60 cycle A.C.
TUBES USED: 1 type 6A8G, Det. Osc., 1 type 6J7G, 2nd Det., 1 type 6K6G, Output, 1 type 5Y4G Rectifier.
FREQUENCY RANGE: 530-1800 K.C.
INTERMEDIATE FREQUENCY: 470 K.C.
CURRENT CONSUMPTION: 45 watts.
SPEAKER: B-6.
POWER OUTPUT: ½ watt.

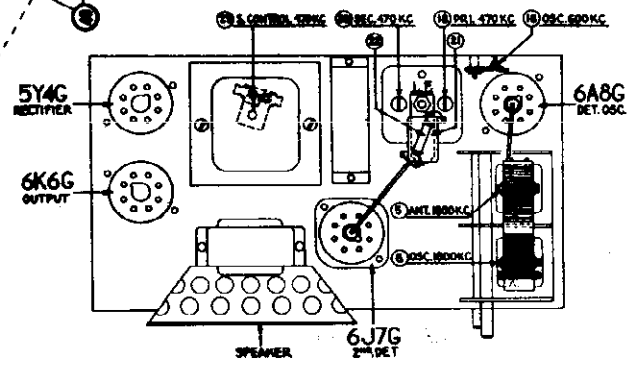

Fig. 1. Location of Compensators

MODEL 37-600
Voltage, Chassis
Alignment
Transformer Data

PHILCO RADIO & TELEV. CORP.

Adjusting Compensating Condensers

To accurately adjust the compensating condensers in the **Model 37-600** receiver, it is necessary to use a signal generator of high stability on all frequencies, such as the **PHILCO Model 088 Signal Generator.** This instrument has a continuous frequency range from 110 to 20,000 K.C., and is designed to meet every requirement of the serviceman.

An output meter is also needed.—**PHILCO MODEL 025 Circuit Tester** includes a very sensitive output meter.

Convenient tools to use in adjusting the compensators are the **Philco No. 3164 Fibre Wrench** and **No. 27-7059 Fibre Handled Screw-driver.**

The locations of the various compensating condensers are shown in Fig. 1. Connect the output meter to the plate and cathode contacts of the 6K6G power tube, and adjust it to use the 0-30 volt range.

When adjusting each circuit, care should be taken to have the signal generator attenuator set for approximately ¼ scale reading on output meter.

Intermediate Frequency Circuit

1. Connect the 088 signal generator output lead through a .1 mfd. condenser to the grid of the 6A8G tube and the ground lead to the chassis.

2. Turn the sensitivity compensator ㉘ to maximum capacity position (clockwise), and then release it; 1½ turns (counter-clockwise).

3. Turn gang condenser to approximately 600 K.C. Set the signal generator at 470 K.C.

4. Adjust the compensator ⑱ and ⑳ for maximum reading on the output meter. Then turn the sensitivity compensator ㉘ clockwise until a hiss, (oscillation) is heard. Now turn the compensator ㉘ counter-clockwise until hiss ceases, then continue for ¼ turn more.

Radio Frequency Circuit

1. Remove the signal generator output lead from the 6A8G tube, and connect it to the aerial lead of the receiver through a 100 mmfd. condenser.

2. Turn the gang condenser to minimum capacity position, (counter-clockwise) and place a .006" (six-thousands inch) gauge between the stator and rotor plates. Now turn the gang clockwise until stator and rotor plates touch gauge.

3. Remove gauge from gang condenser. Now set signal generator at 900 K.C., (using second harmonic 1800 K.C.), adjust compensators ⑪ and ⑤ for maximum reading on output meter.

4. Turn the signal generator and receiver gang condenser to 600 K.C., and adjust compensator ⑯. In doing so, the gang condenser must be rolled slightly above and below the 600 K.C. signal until the maximum reading is indicated on the output.

5. Turn the gang condenser to 1800 K.C. and signal generator to 900 K.C., (using second harmonic of signal generator 1800 K.C.), readjust compensator ⑪ for maximum reading on output meter. Set gang as per paragraph 2, for this adjustment.

6. Turn the gang condenser and signal generator to 1400 K.C., readjust compensator ⑤ for maximum reading on output meter. After the above adjustments are completed and receiver is placed in the cabinet, the dial pointer is properly placed by turning the signal generator to 1000 K.C. Then tune receiver for maximum signal. The dial pointer is then placed on gang shaft, so that it indicates 1000 K.C. on dial.

POWER TRANSFORMER DATA

TERMINAL	A.C. VOLTS	CURRENT	CIRCUIT	COLOR
1-2	120		PRIMARY	WHITE
5-7	580	50 M.A.	SECONDARY	YELLOW
3-4	5.0	2.0 A.	FIL. RECT	BLUE
8-10	6.3	1.5 A.	FILAMENTS	BLACK
6			CENTER TAP OF 5-7	YELLOW GREEN TRACER
9			CENTER TAP OF 8-10	BLACK, YELLOW TRACER

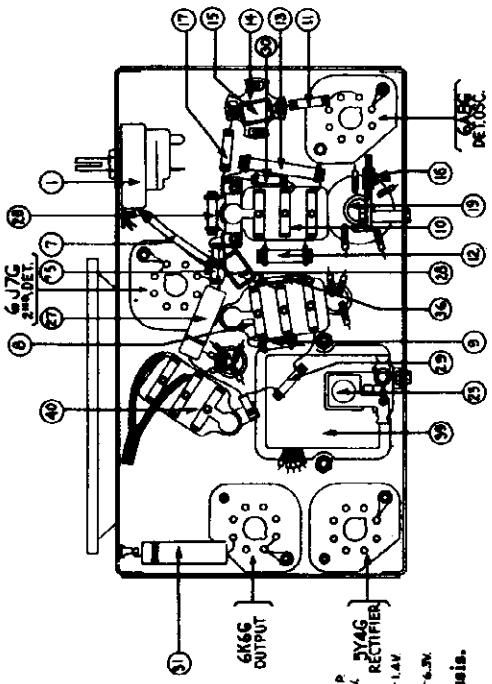

Fig. 3. Base View

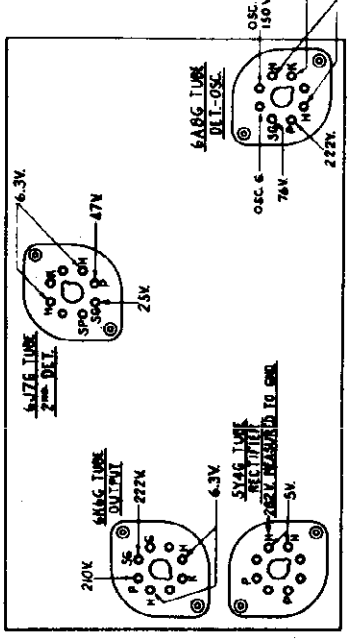

Fig. 2. Tube Sockets as Viewed from Underside of Chassis. (Measured from Socket Terminal to Ground Volume Control in Maximum Position)

©John F. Rider, Publisher

MODEL 37-602
Schematic
Parts

PHILCO RADIO & TELEV. CORP.

Schematic Number	Part and Description	Part No.	Price List
①	Condenser (.001 Mf. Tubular)	30-4201	$.20
②	Condenser (35 mmf. Mica)	30-1044	.20
③	Compensator (Ant. 1800 KC.)		
④⑤⑥	Ant. Transformer	32-2140	1.40
⑤⑥⑦	Osc. Transformer	32-2041	1.20
③④⑤⑥⑦	Tuning Condenser	31-1794	3.00
③a	Compensator (Osc. 1800 KC.)		
⑧	Condenser (35 mmf. Mica)	30-1044	.20
⑨	Compensator (Osc. Series) (600 Kc.)	04000S	.35
⑩	Resistor (4900 ohm, ½ watt)	33-249339	.20
⑪	Condenser (.05 Mf. Bakelite)	3615-OSU	.35
⑫	Resistor (120,000, ½ watt)	33-412339	.20
⑬	Condenser (.25-.05-.05-.05-.15-.01 mf.)	30-4410	1.00
⑭	Elec. Condenser (16-16-10 mf.)	30-2148	3.20
⑮	Filter Choke	32-7544	.95
⑯	Elec. Condenser (16 mf.)	Part of ⑭	...
⑰	Resistor (51,000 ohm, ¼ watt)	33-351339	.20
⑱	Condenser (.05 mf.)	Part of ⑫	...
⑲	Resistor (15,000 ohm, ¼ watt)	33-315339	.20
⑳	Resistor (300 ohm wirewound)	33-3010	.20
㉑㉒㉓	Condenser (.03 mf. Bakelite)	8318-OSU	.35
㉑㉒㉓	Compensator (1st I.F. Pri.)	Part of ㉔	...
㉑㉒㉓㉔	1st I.F. Transformer	32-2005	1.50
㉑㉒㉓㉔	Compensator (1st I.F. Sec.)	Part of ㉔	...
㉕	Resistor (300 ohm wirewound)	33-3010	.20

Replacement Parts

for Model 37-602

PRICES SUBJECT TO CHANGE WITHOUT NOTICE

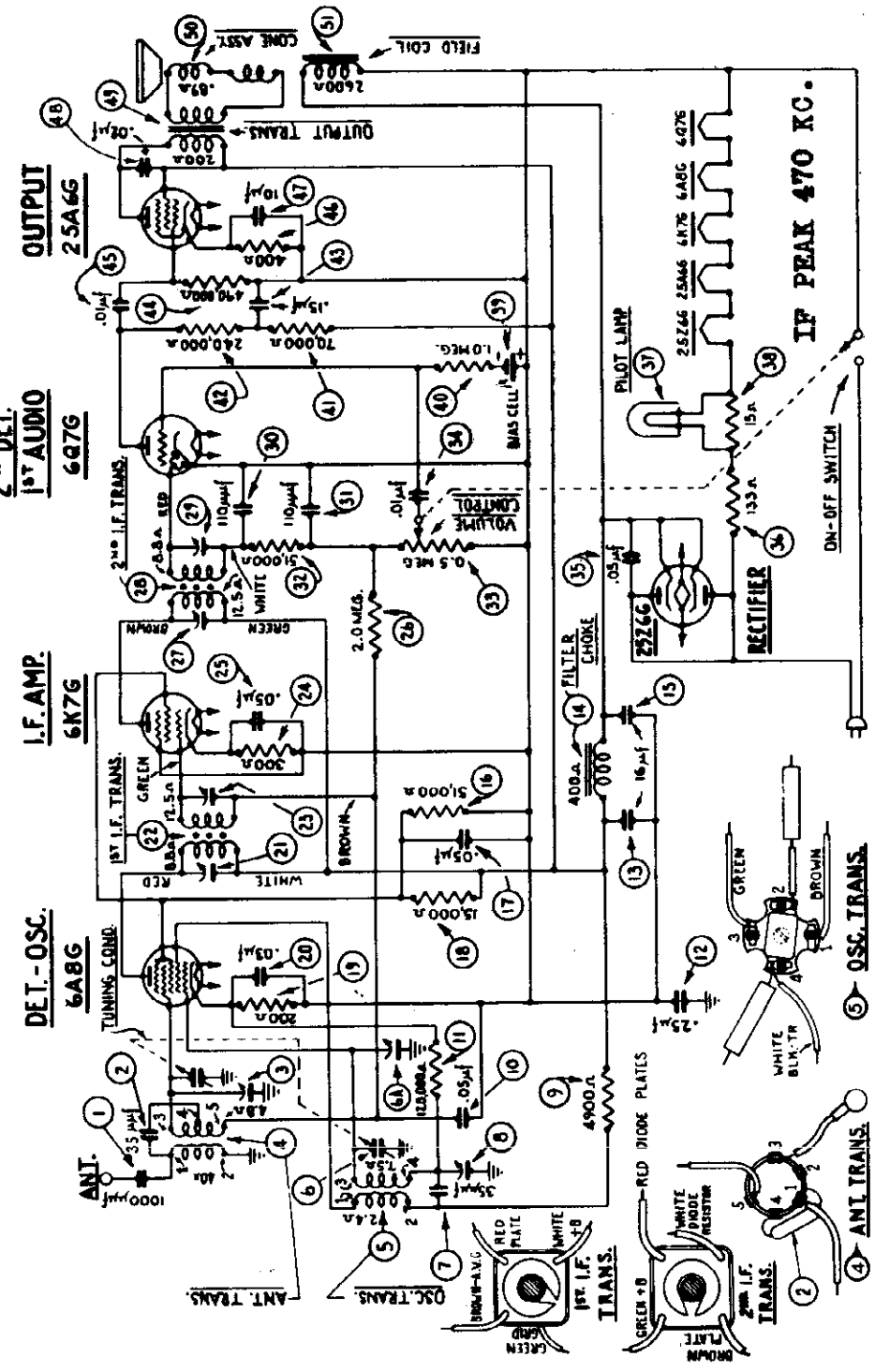

Schematic Number	Part and Description	Part No.	Price List
①	Condenser (.5 mf.)	Part of ⑫	...
②	Resistor (2.0 meg., ¼ watt)	33-520339	.20
③	Compensator (2nd I.F. Pri.)	Part of ㉔	...
④⑤⑥	2nd I.F. Transformer	32-2006	1.50
④⑤⑥	Compensator (2nd I.F. Sec.)	Part of ㉔	...
⑦⑧⑨	Condenser (.00011 mf. (twin)	8035 (1)U	.25
⑦⑧⑨	Condenser (.00011 mf.)	Part of ⑨	...
⑩	Resistor (51,000 ohm, ¼ watt)	33-351339	.20
⑪	Volume Control (0.5 meg.)	33-5145	1.45
⑫	Condenser (.01 mf. Tubular)	30-4145	.20
⑬	Condenser (.05 mf.)	Part of ⑫	...
⑭	Resistor (133.15 ohm)	33-3235	.55
⑮	Pilot Lamp	34-2068	.16
⑯	Resistor (15 ohm)	Part of ⑭	...
⑰	Bias Cell	41-8009	.20

Schematic Number	Part and Description	Part No.	Price List
⑱	Resistor (70,000 ohm, ¼ watt)	33-370339	.20
⑲	Resistor (240,000 ohm, ¼ watt)	33-424339	.20
⑳	Condenser (.15 mf.)	Part of ⑫	...
㉑	Resistor (490,000 ohm, ¼ watt)	33-449339	.20
㉒	Condenser (.01 mf.)	Part of ⑫	...
㉓	Resistor (400 ohm wirewound) (Flexible)	33-3122	.25
㉔	Elec. Condenser (10 mf.)	Part of ⑭	...
㉕	Condenser (.02 mf. Tubular)	30-4113	.20
㉖	Output Transformer	32-7566	1.10
㉗	Voice Coil Cone Assy.	36-3029	.60
㉘	Field Coil Assy.	36-3040	2.40
㉙	Volume Control Mtg. Nut	W-684-A	1.25C
㉚	B.C. Resistor Mtg. Screw	W-650-A	.40C
㉛	B.C. Resistor Mtg. Nut	W-95-A	.30C
㉜	Tube Shield Base	28-3898	.03
㉝	Tube Shield Body	28-2726	.10

Chassis Mtg. Screw	W-1656-A	.75C
Chassis Mtg. Nut	W-124-A	.35C
Chassis Mtg. Washer	W-151-A	.15C
Chassis Mtg. Washer	W-291-A	.40C
Speaker Baffle	40-5951	...
Dial	27-5191	...
Pointer	28-3789	...
Shield Bottom Assy.	38-7765	...
Shield Bottom Insulator	27-8182	.02
Tube Socket (7-prong)	27-6057	.11
Tube Socket (5-prong)	27-6053	.11
Knob (Volume, On-Off)	27-4309	.10
Knob (Station Selector)	27-4308	.10
Elec. Condenser Support	6440	.05
Elec. Condenser Insulator	27-7836	.06
Pilot Lamp Bracket Assy.	38-7513	.50
Ant. Coil Bracket	28-3546	.03
Bias Cell Assy.	38-7416	.15
Speaker 134	36-1194	6.00
A.C. Cord Assem.	L-2183	.40
Aerial Lead Assem.	38-5144	.30

©John F. Rider, Publisher

MODEL 37-602
Voltage, Socket

PHILCO RADIO & TELEV. CORP.

Trimmers, Chassis Alignment

Adjusting Compensating Condensers

To accurately adjust the compensating condensers in the Model 37-602 receiver, it is necessary to use a signal generator of high stability on all frequencies such as the **PHILCO Model 088 Signal Generator.** This instrument has a continuous frequency range from 110 to 20,000 K.C., and is designed to meet every requirement of the serviceman.

An output meter is also needed,—**PHILCO Model 025 Circuit Tester** includes a very sensitive output meter.

Convenient tools to use in adjusting the compensators are the **PHILCO No. 3164 Fibre Wrench** and **No. 27-7059 Fibre Handled Screw-driver.**

The locations of the various compensating condensers are shown in Fig. 1. Connect the output meter to the plate and cathode contacts of the (25A6G) power tube and adjust it to use the 0-30 volt range.

Intermediate Frequency Circuit

1. Turn the gang condenser to the maximum capacity position (extreme clockwise) and set the Volume Control of the receiver at the maximum position (extreme clockwise).

2. Connect the signal generator output lead through a .1 mfd. condenser to the grid of the 6K7G tube, and the generator ground lead to any point of chassis.

3. Set the signal generator at 470 K.C. and adjust ㉗ and ㉙ for maximum reading on the output meter.

4. Remove signal generator output lead and .1 mfd. condenser, from the grid of 6K7G and connect it to the grid of 6A8G. Now adjust condensers ㉑ and ㉓ for maximum reading on the output meter.

Radio Frequency Circuit

1. Remove the signal generator output lead from the 6A8G tube and connect it to the aerial lead of the receiver through a 100 mmfd. condenser. Turn the gang condenser to the minimum capacity position (extreme counter clockwise) and place a .006" (six thousandth inch) gauge between the stator and rotor plates. Now turn the gang clockwise until stator and rotor plates touch gauge.

2. Remove gauge from gang condenser. Now set signal generator at 900 K.C. (using second harmonic (1800 K.C.) adjust compensators ⑥A and ③ for maximum reading on the output meter.

3. Turn the signal generator and receiver gang condenser to 600 K.C., and adjust compensator ⑧. In doing so, the gang condenser must be rolled slightly above and below the 600 K.C. signal until the maximum reading is indicated on the output meter.

4. Turn the gang condensor to 1800 K.C. and signal generator to 900 K.C., (using second harmonic of signal generator 1800 K.C.), readjust compensator ⑥A for maximum reading on output meter. Set gang as given in paragraph 1, for this adjustment.

5. Turn the gang condenser and signal generator to 1400 K.C., readjust compensator ③ for maximum reading on output meter. After the above adjustments are completed and receiver is placed in the cabinet, the dial pointer is properly placed by turning the signal generator to 1000 K.C. Then tune receiver for maximum signal. The dial pointer is then placed on gang shaft, so that it indicates 1000 K.C. on dial.

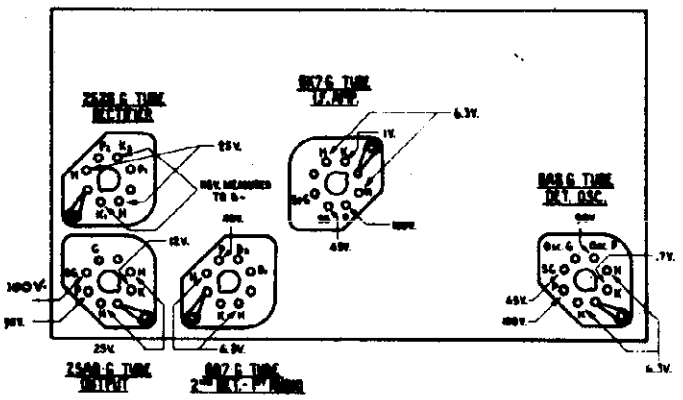

Fig. 2. Tube Sockets as viewed from underside of chassis. (Voltages measured from socket contacts to B—)

Specifications

TYPE CIRCUIT: Superheterodyne with pentode output.
POWER SUPPLY: 115 V., 25 or 60 cycle, A. C.; D. C.

FREQUENCY RANGE: 530--1800 K.C.
INTERMEDIATE FREQUENCY: 470 K.C.
CURRENT CONSUMPTION: 55 watts.
SPEAKER: B-4.
POWER OUTPUT: ¼ watt.

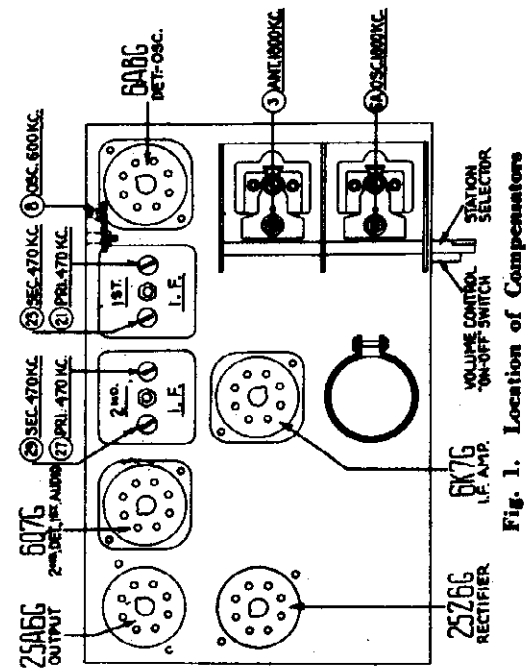

Fig. 1. Location of Compensators

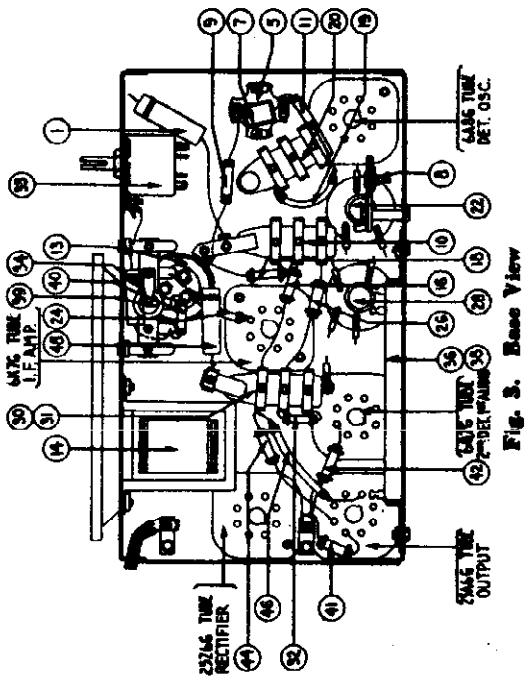

Fig. 3. Base View

©John F. Rider, Publisher

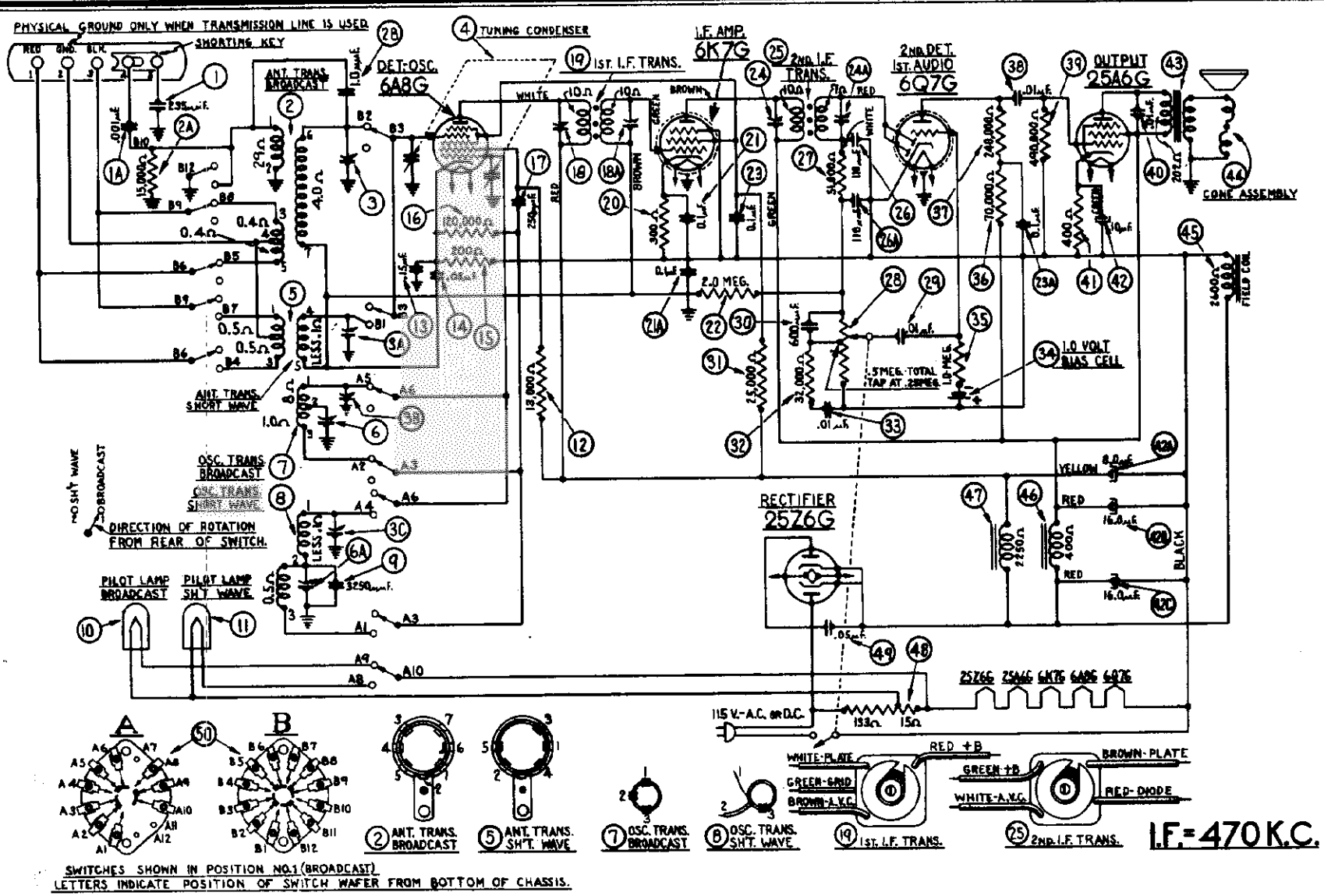

Fig. 2—Schematic Diagram

Electrical Specifications

Type of Circuit: Superheterodyne with pentode output.

Power Supply: 115 V., D.C., or A.C., 25 to 60 cycles.

Power Consumption: 50 watts.

Speaker: B-5.

Power Output: ¾ watt.

Philco Tubes Used: 1 type 6A8G, Detector-Oscillator; 1 type 6K7G, I. F.; 1 type 6Q7G, 2nd Detector, A. V. C., and 1st audio; 1 type 25A6G, Output; and 1 type 25Z6G, Rectifier.

Tuning Ranges: Two. Range 1.— 530 to 1750 K. C.
Range 2.—6.0 to 18.0 M. C.

MODEL 37-604
Alignment
Notes

PHILCO RADIO & TELEV. CORP.

Adjusting Compensating Condensers

The following procedure must be observed in adjusting the compensators:

DIAL ADJUSTMENT—In order to adjust this receiver correctly, the dial must be aligned to track properly with the tuning condenser. To do this, rotate the tuning condenser control to the extreme counter-clockwise position (maximum capacity). Loosen the set screw of dial hub, then turn dial until the glowing indicator is centered on the first index line of dial scale (see Fig. 5). Now tighten the dial hub set screw in this position.

OUTPUT METER—The 025 Output Meter is connected to the plate and cathode terminals of the 25A6G tube. Adjust the meter to use the (0-30) volt scale. Before adjusting the compensators of each circuit, the signal generator attenuator should be set to give approximately ¼ scale reading on output meter.

INTERMEDIATE FREQUENCY CIRCUIT

1—Connect the 088 Signal Generator output lead through a .1 mfd condenser to the control grid of the 6K7G tube and the ground connection of the output lead to the chassis.

2—The range switch is set in position No. 1 (Broadcast). Rotate the tuning condenser of the receiver to the maximum capacity position (counter-clockwise) and adjust the signal generator for 470 K. C.

3—Now adjust compensators ㉔a 2nd I. F. Sec. and ㉓ 2nd I. F. Pri. for maximum output.

4—Remove the signal generator output lead and .1 mfd. condenser from the 6K7G tube and connect them to the grid of the 6A8G tube. Now adjust compensators ㉒a 1st I. F. Sec. and ⑱ 1st I. F. Pri. for maximum output.

RADIO FREQUENCY CIRCUIT

Tuning Range—6.0 to 18.0 M. C.

1—Remove the signal generator output lead and series condenser from the 6A8G tube and connect them to terminal No. 1 on aerial input panel, and the generator ground lead to terminal No. 3, front of chassis.
(a) Terminal 4 and 5 of aerial input panel must be shorted with connector link provided on the panel, during the following adjustments.

2—Set range switch in position No. 2 (Shortwave). Turn signal generator and receiver dials to 18 M. C. and adjust compensator ③c Osc. for maximum output.

3—The adjustment of the antenna compensator on the high frequency range causes a slight detuning of the oscillator circuit. In order to overcome this detuning effect, connect a variable condenser of approximately 350 mmfd, having a good vernier drive, across the oscillator section of the tuning condenser (bottom section). Leaving the signal generator and receiver dials at 18 M. C., tune the added condenser so that the second harmonic of the receiver oscillator will beat against the signal from the signal generator bringing in the signal. The antenna compensator ③a should then be adjusted to give maximum output.

4—Now remove the external condenser from the tuning condenser of receiver and turn compensator ③c Osc. to the maximum capacity position (clockwise). Then without moving signal generator or receiver tuning condenser, turn compensator ②c (counter-clockwise) until a second peak is reached on the output meter. The first peak is caused by tuning to the image frequency signal and must not be used. Compensator ②c is adjusted on the second peak to give maximum output.
A further check on the image signal may be obtained by turning the signal generator attenuator to maximum output. Then turn dial of receiver to approximately 17.060. If the receiver is aligned correctly and the signal from the generator is strong enough, the image signal will be heard at this point.

5—The low frequency compensator ④a is now adjusted by turning signal generator and receiver dials to 6 M. C. and adjusting compensator ④a Osc. series (see note (a) below) for maximum output.
(a) When compensator ④a Osc. series is being adjusted, the tuning condenser must be rolled for maximum output. This procedure is accomplished as follows:—First tune compensator ④a for maximum output at 6.0 M. C. Then vary the tuning condenser back and forth about the 6.0 M. C. dial mark until maximum output is obtained. Now retune compensator ④a, and again vary the tuning condenser back and forth at 6.0 M. C. for maximum output.
This operation of first tuning the compensator, then the tuning condenser is continued until the maximum output is obtained at or near the 6.0 M. C. frequency. The maximum output point of this adjustment may fall slightly above or below the 6 M. C. dial setting.

6—Compensator ③c Osc. and ②a Ant. are now retuned as given in paragraphs 3 and 4 above.

Tuning Range—530 to 1750 K. C.

1—Set range switch in position No. 1 (Broadcast). Turn the 088 Signal Generator indicator to 800 K. C. and the receiver dial to 1600 K. C. The second harmonic of the 800 K. C. signal, to which the signal generator is tuned, is used for the 1600 K. C. adjustment.
Now adjust compensators ③b Osc. and ② Ant. for maximum output.

2—Turn the signal generator and receiver dials to 600 K. C. and adjust compensator ④ Osc. series (screw)—see note (a) below—for maximum reading on the output meter.
(a) When compensator ④ Osc. series is being adjusted, the tuning condenser must be rolled for maximum output. This procedure is accomplished as follows:—First tune compensator ④ for maximum output at 600 K. C. Then vary the tuning condenser back and forth until the maximum output point is reached. Now retune compensator ④ and again vary the tuning condenser back and forth at 600 K. C. for maximum output. This operation of first tuning the compensator then the tuning condenser is continued until the maximum output is obtained at, or near, the 600 K. C. frequency. The maximum output point of this adjustment may fall slightly above or below the 600 K. C. dial mark.

3—After the low frequency (600 K. C.) end of the range is adjusted, the 1600 K. C. end is readjusted, as given in paragraph (1) above, to correct any variation that the low frequency series compensator may have caused in the alignment of the high frequency end.

4—Now turn signal generator and receiver dials to 1400 K. C. and readjust compensator ② Ant. for maximum output.

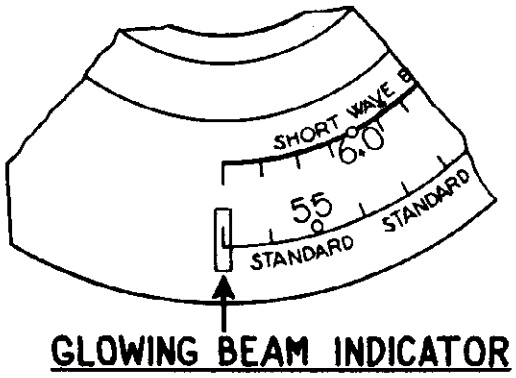

Fig. 5—Dial Calibration

Equipment for Adjusting Receiver

The accurate adjustment of the various compensating condensers is vital to the proper functioning of this receiver. There are four compensating condensers in the I. F. Circuit, four in the Oscillator Circuit, and two in the Antenna Circuit. Incorrect adjustment will cause loss of sensitivity, unsatisfactory tone, and poor selectivity.

To accurately adjust this receiver, precision test equipment is necessary. A signal generator such as the **PHILCO MODEL 088 SIGNAL GENERATOR**, covering from **110** to **20,000 K. C.** is recommended to adjust the compensators at the various frequencies specified. A visual indication of the receiver output is also necessary to obtain correct adjustment of the compensators. PHILCO MODEL 025 CIRCUIT TESTER contains a sensitive output meter and is recommended for these adjustments.

Philco Fibre Wrench No. 3164 and Fibre Handle Screw-driver No. 27-7059 complete the necessary equipment for these adjustments. The locations of the various compensators are shown in Fig. 6.

Antenna Connections

On the lower front corner of the chassis is a panel containing five terminals. When using the Philco High Efficiency Aerial terminals 4 and 5 are connected by the metal strap provided on the panel. The red and black leads of the PHILCO High Efficiency Aerial are connected to terminals 1 and 3 respectively and the ground lead to terminal 2.

If a temporary aerial is used shift the strap to rest across terminals 3 and 4 and connect the aerial to terminal 1. A ground connection must not be used when terminals 3 and 4 are connected.

Pilot Lamp Replacement

Facing the front top of the receiver, the pilot lamp housing will be found directly under the dial scale. Two screws will be found on this housing. The right hand screw holds the housing to the tuning condenser and should be removed only when replacing the housing. The center screw holds the pilot lamp socket assembly to the housing. By removing this center screw, the socket assembly may be removed from the housing for replacement of Pilot Lamps.

©John F. Rider, Publisher

MODEL 37-604
Socket, Trimmers
Voltage, Chassis

PHILCO RADIO & TELEV. CORP.

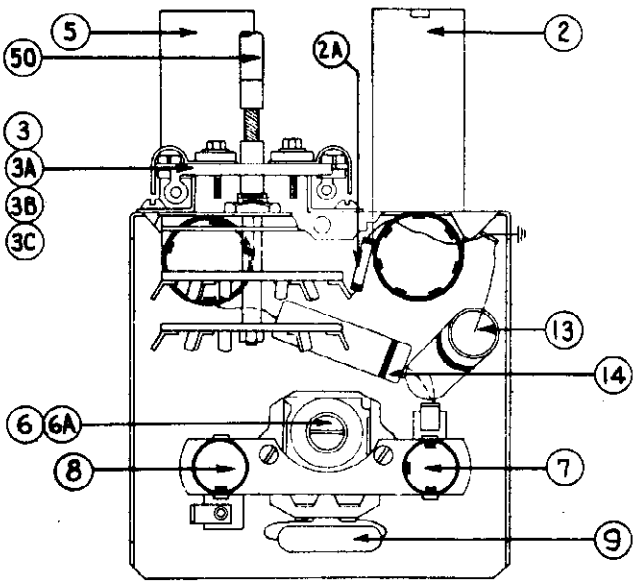

Fig. 3—Rear View of R. F. Unit

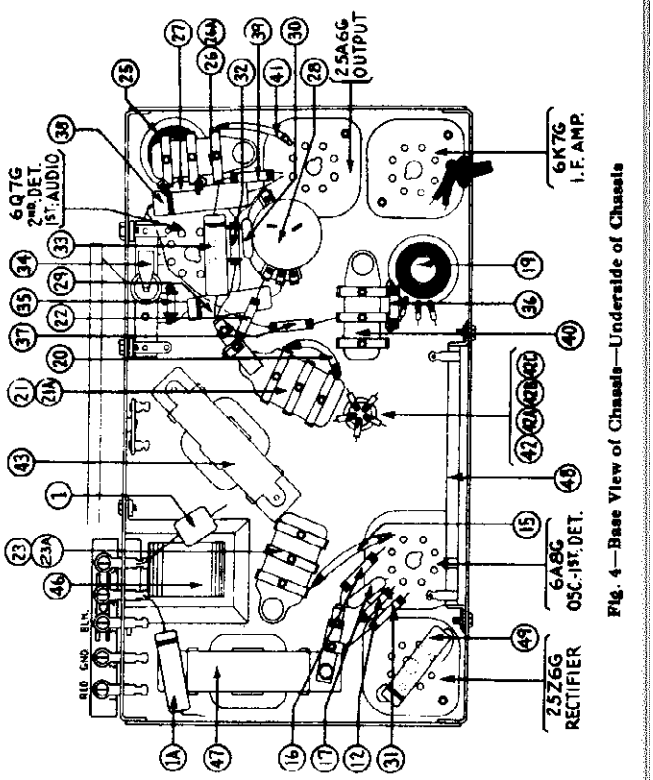

Fig. 4—Base View of Chassis—Underside of Chassis

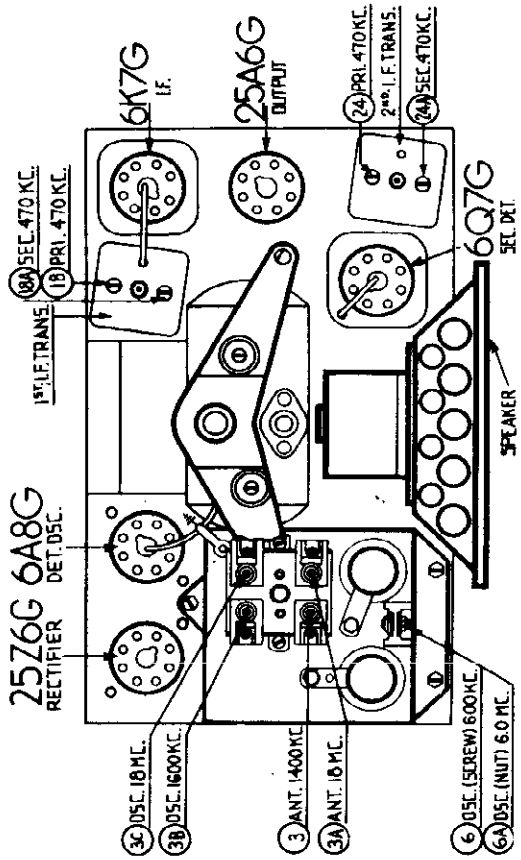

Fig. 6—Location of Compensating Condensers

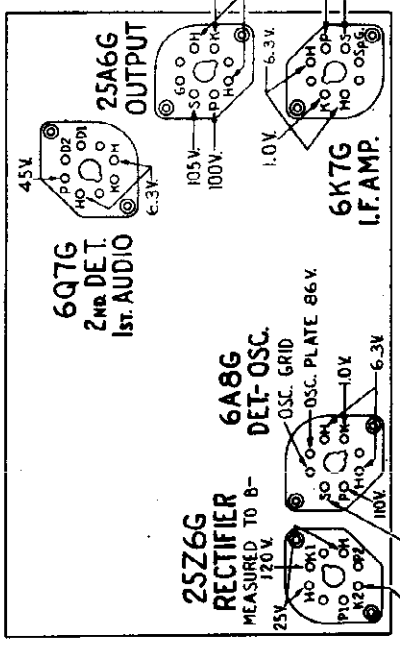

Fig. 1—View of Sockets from Underside of Chassis

The voltages indicated by arrows were measured with a PHILCO 025 CIRCUIT TESTER which contains a voltmeter having a resistance of 1000 ohms per volt. Volume Control at minimum. Range Switch in broadcast position. Line voltage 115 A. C.

©John F. Rider, Publisher

MODEL 37-604
Circuit Data
Parts List

PHILCO RADIO & TELEV. CORP.

General Description

Philco Model 37-604 is a 5 tube superheterodyne receiver using the new Philco High Efficiency self-centering glass tubes and designed for operation on either alternating or direct current. This receiver has two tuning ranges, covering standard broadcast and short wave reception.

The circuit consists of the Philco Foreign Tuning System—controlled by the range switch which provides maximum sensitivity and noise reduction when used with the **New Philco High Efficiency Aerial.** A 6A8G tube is used as the detector-oscillator; 6K7G tube as the I. F. amplifier; 6Q7G tube for the second detector, first audio and automatic volume control; 25A6G tube for Pentode Power Output, and a 25Z6G tube as the Rectifier. Automatic Bass Compensation is built into the volume control circuit and a Bias cell is used for supplying grid voltage to the first Audio tube.

The Radio Frequency circuit is assembled in one unit and mounted on the left side of the receiver (facing the front). This unit contains the antenna and oscillator coils for each tuning range, range switch, compensating condensers and other parts necessary for the operation of the associated circuits.

Mounted vertically and cushioned on the chassis is the tuning condenser. The bottom section of this condenser is for the oscillator tuning and the top section for the antenna circuit Attached to the condenser is the pilot lamp housing.

Replacement Parts—Model 37-604

Schem. No.	Description	Part No.	List Price
1	Condenser (235 mmfd. mica)	30-1037	$0.25
1a	Condenser (.001 mfd. tubular)	30-4453	.20
2	Antenna Transformer (Broadcast)	32-2141	.90
2a	Resistor (15,000 ohms ½ watt)	33-315339	.20
3	Compensator Ant. (1500 K. C.)	31-6085	.60
4	Tuning Condenser	31-1796	3.25
5	Antenna Transformer (S. W.)	32-2179	.55
6	Compensator (Osc. Series, screw, 600 K. C.)	31-6027	.70
7	Oscillator Transformer (Broadcast)	32-2047	.45
8	Oscillator Transformer (S. W.)	32-2048	.45
9	Condenser (3250 mmfd.)	30-1061	.45
10	Pilot Lamp (Broadcast)	34-2068	.16
11	Pilot Lamp (S. W.)	34-2068	.16
12	Resistor (13000 ohms ½ watt)	33-313339	.20
13	Condenser (.15 mfd. tubular)	30-4191	
14	Condenser (.05 mfd. tubular)	30-4020	.20
15	Resistor (200 ohms Wirewound)	33-3010	.20
16	Resistor (120000 ohms ½ watt)	33-412339	.20
17	Condenser (250 mmfd. mica)	30-1032	.25
18	Compensator (Pri. & Sec.)	Part of 19	
19	1st I. F. Transformer (470 K. C.)	32-2059	3.00
20	Resistor (200 ohms wirewound)	33-3010	.20
21	Condenser (.1 mfd. twin bakelite)	4989-ODU	.40
21a	Condenser (.1 mfd.)	Part of 21	
22	Resistor (2.0 megohms ½ watt)	33-520339	.20
23	Condenser (.1 mfd. Twin Bakelite)	4989-ODU	.40
23a	Condenser (.1 mfd. Bakelite)	Part of 23	
24	Compensator (Pri. & Sec.)	Part of 25	
25	2nd I. F. Transformer (470 K. C.)	32-2049	1.50
26	Condenser (110 mmfd. Mica Twin Bakelite)	8035-ODU	.25
26a	Condenser (110 mmfd. Mica Twin Bakelite)	Part of 26	
27	Resistor (51000 ohms ½ watt)	33-351339	.20
28	Volume Control (AC Switch)	38-7630	1.45
29	Condenser (.01 mfd. Tubular)	30-4124	
30	Condenser (110 mmfd. Mica)	30-1049	
31	Resistor (25000 ohms ½ watt)	33-325339	.20
32	Resistor (32000 ohms ½ watt)	33-332339	.20
33	Condenser (.01 mfd. Tubular)	30-4124	
34	Bias Cell (1.0 Volt)	41-8009	.20
35	Resistor (1.0 megohm ½ watt)	33-510339	.20
36	Resistor (70000 ohms ½ watt)	33-370339	.20
37	Resistor (240000 ohms ¼ watt)	33-424339	.20
38	Condenser (.01 mfd. Tubular)	30-4169	.20
39	Resistor (490000 ohms ½ watt)	33-449339	.20
40	Condenser (.01 mfd. Twin Bakelite)	3903-OSU	.25
41	Resistor (400 ohms Wirewound)	33-3122	.25
42	Condenser (10; 16; 16; and 8 mfd.)	30-2154	3.25
43	Output Transformer	32-7568	.95
44	Cone & Voice Coil	36-3029	.60
45	Field Coil Assembly	36-3620	$2.75
46	Filter Choke	32-7572	1.00
47	Filter Choke	32-7569	1.30
48	Filament Resistor (15-133 ohms)	33-3235	.55
49	Condenser (.05 mfd. Tubular)	30-4020	.20
50	Range Switch	38-7631	1.50
	Speaker Assembly	36-1204	5.00
	Pilot Lamp Socket Assembly	38-7616	.80
	Pilot Lamp Housing Assembly	31-1816	
	Pilot Lamp	34-2068	.16
	Dial and Hub Assembly	31-1799	.60
	Socket 8 prong	27-6058	.11
	Socket 7 prong	27-6057	.11
	Tube Shield	28-2726	.10
	Tube Shield Base	28-3898	.03
	Bias Cell Panel Assembly	38-7436	.15
	Terminal Panel Assembly	38-7848	
	Terminal Panel Insulator	27-8360	
	Mtg. Bracket Tuning Condenser	28-3538	.12
	Mtg. Bracket Washer	27-4307	
	Mtg. Bracket Washer	3914	.03
	Mtg. Bracket Sleeve	28-3806	
	Mtg. Bracket Screw	W-1446A	Per C .40
	Shaft Centering Plate	28-3805	.08
	Split Gear Assembly	31-1787	.30
	Gear Tuning Shaft	28-6436	Per C .60
	Retaining Ring	28-8604	.02
	Nut, Volume & Range Switch	W-684	Per C 1.25
	Oscillator Coil Mtg. Plate	28-3808	.02
	Spacers	27-8228	.01
	Wire Panel R. F. Unit	38-7178	.02
	Screw Mtg. Coil		
	Bottom Shield & Insulator Assembly	38-7908	
	Felt Ring Assembly	36-3605	.10
	Baffle & Silk Assembly	40-5918	.20
	Cabinet Top	27-4300	
	Spring	28-8602	
	Cup	28-3842	
	Washer	27-8255	
	Felt Washer	27-8258	
	Felt Washer	27-8235	
	Knob Tuning	27-4330	.10
	Knob Vernier	27-4331	.10
	Knob Volume & Range Switch	27-4332	.10
	R. F. Housing Side	28-3770	.15
	R. F. Housing Back	28-3814	
	Screw Chassis Mtg.	W-599	Per C .50
	Washer Chassis Mtg.	W-151	Per C .20

Figures in black type indicate circled figures in base view.

Prices Subject to Change Without Notice

©John F. Rider, Publisher

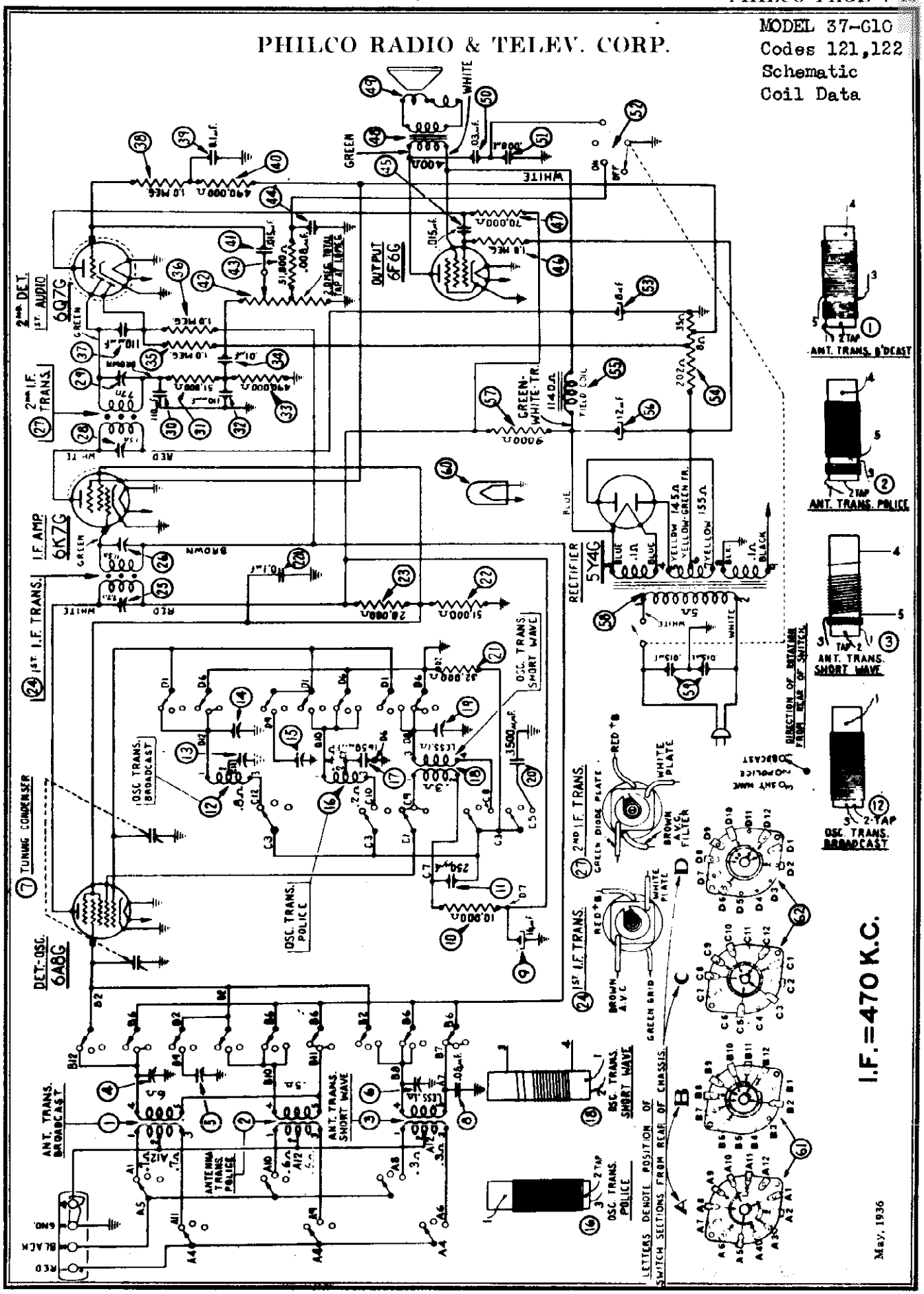

©John F. Rider, Publisher

MODEL 37-610
Codes 121,122
Circuit Data
Voltage
Transformer Data

PHILCO RADIO & TELEV. CORP.

Model 37-610
Codes, 121-122
General Description

Model 37-610 is a 5 tube superheterodyne receiver for operation on alternating current, having three tuning ranges, covering standard broadcast and short-wave frequencies and using the New Philco High-Efficiency self-centering glass tubes.

The circuit includes the Philco Foreign Tuning System—controlled by the range switch—providing maximum sensitivity and noise reduction when used with the Philco High Efficiency Aerial, supplied with the receiver.

The red and black leads of the High-Efficiency Aerial "transmission line" are connected to terminals 1 and 2 respectively, of the terminal panel provided at the rear of the chassis. Connect the jumper of the terminal panel across terminal 3 and 4.

If a temporary aerial is used, the jumper should be across terminal 2 and 3. The aerial connects to terminal 1 and the ground to terminal 3.

A good ground connection is desirable in all installations—with the Philco High-Efficiency Aerial, a ground lead and ground clamp are provided. Make the ground connection from the nearest water or radiator pipe to terminal 3 on the terminal panel.

CONSTRUCTION

The chassis is constructed in three basic assembly units.

The Radio Frequency unit contains a 6A8G tube which functions as a Detector-Oscillator, tuning condenser, antenna and oscillator coils for each tuning range, selector switch—compensating condensers for all coils and other parts necessary for the associated circuits. The unit is separately mounted on rubber grommets, cushioning it from the main chassis.

The Intermediate Frequency unit, mounted on the right-hand side of the chassis, facing front, consists of the Intermediate Frequency coils, compensating condensers, a 6K7G tube for I. F. Amplifier stage, and a 6Q7G tube as the second detector-automatic volume control and first audio stage.

All voltages supplied to the I. F. and R. F. units are furnished from a terminal strip mounted in this unit.

The Power Pack and audio output circuits, together with the required Voltage dividers and filter condensers are mounted in the power unit.

Although unit construction has changed the appearance of this model, the service bulletin will be of great assistance in checking through all stages of the receiver. The Wiring Diagram, as usual, is numbered, indicating all important parts. These numbers correspond with the parts layout shown in Fig. (6). In addition, the range switch wafers are shown on the schematic diagram. The contacts on each wafer are lettered and numbered to indicate their connection points in the schematic diagram, which are also lettered and numbered. The physical drawings of each coil used in the receiver are also shown on schematic diagram Fig. (5). The connections of these coils are numbered on the coil itself and on the schematic diagram.

Fig. 1 shows the Voltage measurements taken from the bottom of the sockets at each contact. In Fig. 2, the correct position of the dial indicator, for proper adjustment of the compensators is shown. Fig. 3, and 4, are the location of the I. F. and R. F. compensators respectively.

The Model 37-610 code 121 receiver is used in cabinets type B and J. In code 122 receiver, Type T cabinet is used. This receiver differs from code 121, only in the rectifier socket mounting and power transformer. The socket is placed adjacent to the 6F6G output tube and power transformer (Part No. 32-7626) is used. Location of rectifier socket is shown in Figs. 1 and 6.

Electrical Specifications

Voltage Rating) 115 Volts. A. C.
Frequency Rating: 50-60 and
For 25 to 40 cycle operation, use Power Transformer marked with asterisk in parts list.
Power Consumption: 60 Watts.
Type and Number of Tubes: 1 type 6A8G, Detector-Oscillator; 1 type 6K7G, I. F.; 1 type 6Q7G; 2nd Detector, A. V. C. and 1st audio; 1 type 6F6G, Output; and 1 type 5Y4G Rectifier.
Undistorted Output: 3.Watts.
Type Circuit: Superheterodyne with Pentode Output.
Intermediate Frequency: 470 K. C.
Tuning Ranges: 3. Range 1; 530 to 1720 Kilocycles.
Range 2; 2.3 to 7.4 Megacycles.
Range 3; 7.35 to 22 Megacycles.
Speaker Code: 121.—HS.
Speaker Code: 122.—S7.

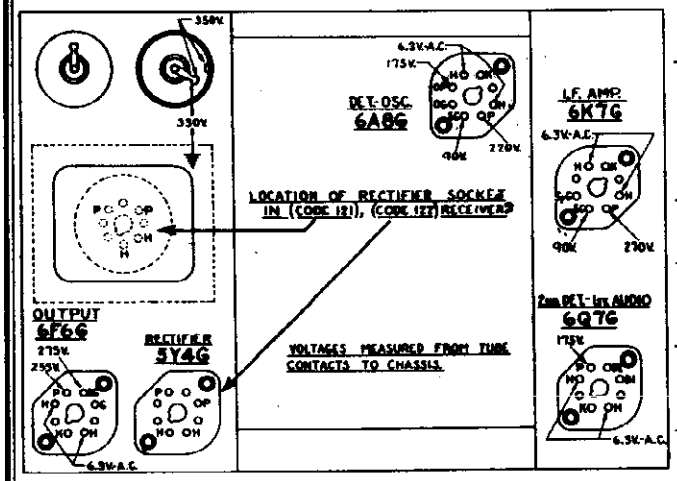

Fig 1—Tube Socket Voltages Viewed from Underside of Chassis

The Voltages Indicated by Arrows were Measured with a PHILCO 025 CIRCUIT TESTER which contains a 1000 ohm per volt Voltmeter. Range Switch in Broadcast Position. 115 volt line.

POWER TRANSFORMER DATA

Lead No. Shown on Schematic	A C Volts	Currents	Circuit	Color	Resistance
1-2	120	—	Pri.	White	5 ohms
3-4	5.0	2.0A	Fil. Rectifier	Blue	.1 ohms
5-7	670	70 M.A.	High Voltage Sec.	Yellow	145 ohms 155 ohms
6	—	—	Center Tap of 5-7	—	—
8-9	6.7	2.1A	Fil.	Black	.1 ohms

©John F. Rider, Publisher

PHILCO RADIO & TELEV. CORP.

MODEL 37-610
Codes 121, 122
Trimmers,
Alignment

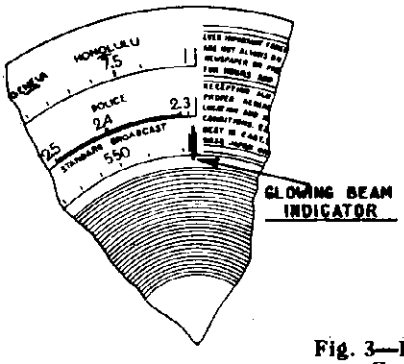

Fig. 2—Dial Calibration

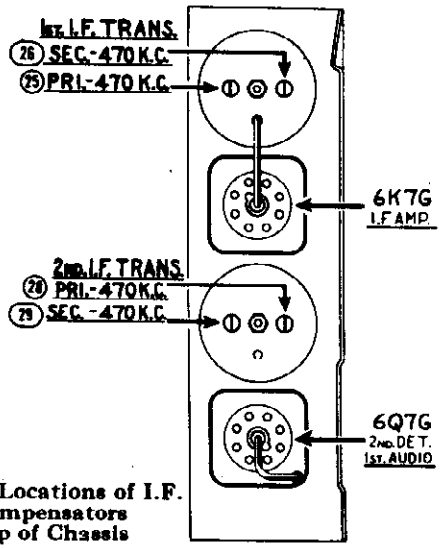

Fig. 3—Locations of I.F. Compensators Top of Chassis

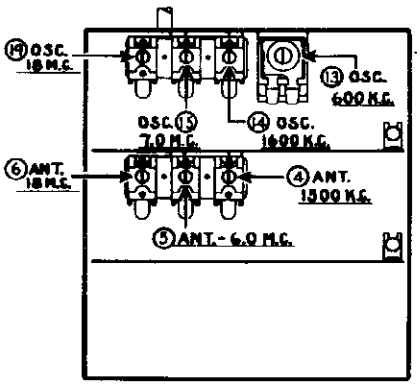

Fig. 4—Locations of R.F. Compensators Underside of Chassis

Alignment of Compensators

The accurate adjustment of the various compensating condensers is vital to the proper functioning of this receiver. There are four compensating condensers in the I. F. Circuit, four in the Oscillator Circuit, and three in the Antenna Circuit. Incorrect adjustment will cause loss of sensitivity, unsatisfactory tone, and poor selectivity.

To accurately adjust this receiver, precision test equipment is necessary. A signal generator such as the PHILCO MODEL 088 SIGNAL GENERATOR, covering from 110 to 20000 K. C. is recommended to adjust the compensators at the various frequencies specified. A visual indication of the receiver output is also necessary to obtain correct adjustment of the compensators. PHILCO MODEL 025 CIRCUIT TESTER contains a sensitive output meter and is recommended for these adjustments.

Philco Fibre Wrench No. 3164 and Fibre Handle Screw-driver No. 27-7059 complete the necessary equipment for these adjustments. The locations of the various compensators are shown in Figs. 3 and 4.

The following procedure must be observed in adjusting the compensators:—

DIAL ADJUSTMENT—In order to adjust this receiver correctly, the dial must be aligned to track properly with the tuning condenser. To do this, rotate the tuning condenser control to the extreme counter-clockwise position (maximum capacity). Loosen the set screw of dial hub, then turn dial until the glowing indicator is centered between the index lines of dial scale (see Fig. 2). Now tighten the dial hub set screw in this position.

OUTPUT METER—The 025 Output Meter is connected to the plate and cathode terminals of the (6F6G) tube. Adjust the meter to use the (0-30) volt scale.

Before adjusting the compensators of each circuit, the signal generator attenuator should be set to give approximately ¼ scale reading on output meter.

INTERMEDIATE FREQUENCY CIRCUIT

Frequency 470 K. C.

1 Connect the 088 signal generator output lead through a .1 mfd. condenser to the control grid of the 6A8G and the ground connection of output lead to the chassis.
2 The tuning range switch is set in position No. 1 (Broadcast). Rotate the tuning condenser of receiver to the maximum capacity position (counter-clockwise), and adjust the signal generator for 470 K. C.
3 Adjust compensators ㉚ 2nd I. F. Sec., ㉘ 2nd I. F. Pri., ㉖ 1st I. F. Sec. and ㉕ 1st I. F. Pri. for maximum reading on output meter.

RADIO FREQUENCY CIRCUIT

Tuning Range—7.3 to 22.0 M. C.

1 Remove the signal generator output lead from grid of 6A8G tube and connect it through a 0.1 mf. condenser to terminal No. 1 on aerial input panel, rear of chassis. Connect generator ground lead to chassis. Terminals 2 and 3 of aerial input panel must be connected with connector link provided on the panel.
2 Set tuning range switch in position No. 3. Turn signal generator and receiver dial to 18.0 M. C. and adjust compensators ⑲ osc., and ⑥ ant. for maximum output.
The adjustment of the antenna compensator on the high frequency range causes a slight detuning of the oscillator circuit. In order to overcome this detuning effect, connect a variable condenser of approximately 350 mmf., having a good vernier drive, across the oscillator section of the tuning condenser. Leaving the signal generator and receiver dials at 18.0 M.C., tune the added condenser so that the second harmonic of the receiver oscillator will beat against the signal from the 088 signal generator. The antenna compensator ⑥ should then be adjusted to give maximum output. Now remove the external condenser and turn compensator ⑲ to maximum capacity (clockwise) then without moving signal generator or receiver tuning condenser, back off compensator ⑲ (counter-clockwise) until a second peak is reached on the output meter. Note:—The first peak is caused by tuning to the image signal and must be neglected.

Tuning Range: 2.3 to 7.4 Megacycles.

1 Turn range switch to position No. 2 (Police). Rotate signal generator and receiver dials to 7.0 M.C. Then adjust compensator ⑬ for maximum output. Now turn signal generator and receiver dials to 6.0 M.C. and adjust compensator ⑤ for maximum reading on output meter.

Tuning Range: 530 to 1720 Kilocycles.

1 Set range switch in position No. 1 (standard broadcast). The 088 signal indicator is set at 800 K. C. and the receiver dial at 1600 K. C.
(a) In adjusting the receiver at 1600 K. C., the second harmonic of 800 K. C., to which the signal generator is tuned, is used.
Now adjust compensator ⑭ osc., ④ ant. for maximum output.
2 The low frequency end of the band is now tuned by turning signal generator and receiver dials to 600 K. C. and adjust compensator ⑬ for maximum output. When compensator ⑬ osc. series is being adjusted, the tuning condenser must be rolled for maximum output. This is accomplished as follows: First tune compensator ⑬ for maximum output. Then vary the tuning condenser for maximum output about 600 K. C. Now retune compensator ⑬, and again vary the tuning condenser back and forth at 600 K. C. for maximum output. This operation of first tuning the compensator, then the tuning condenser is continued until maximum output is obtained at the 600 K. C. frequency.
3 After the low frequency (600 K. C.) end of range 1 is adjusted, the 1600 K. C. end is re-adjusted, as given in Paragraph 1 above, to correct any variation that the low frequency series compensator may have caused in the alignment of the high frequency end.
4 Now turn signal generator and receiver dial to 1500 K. C. and re-adjust compensator ④ for maximum output.

©John F. Rider, Publisher

MODEL 37-610
Chassis
Parts List

PHILCO RADIO & TELEV. CORP.

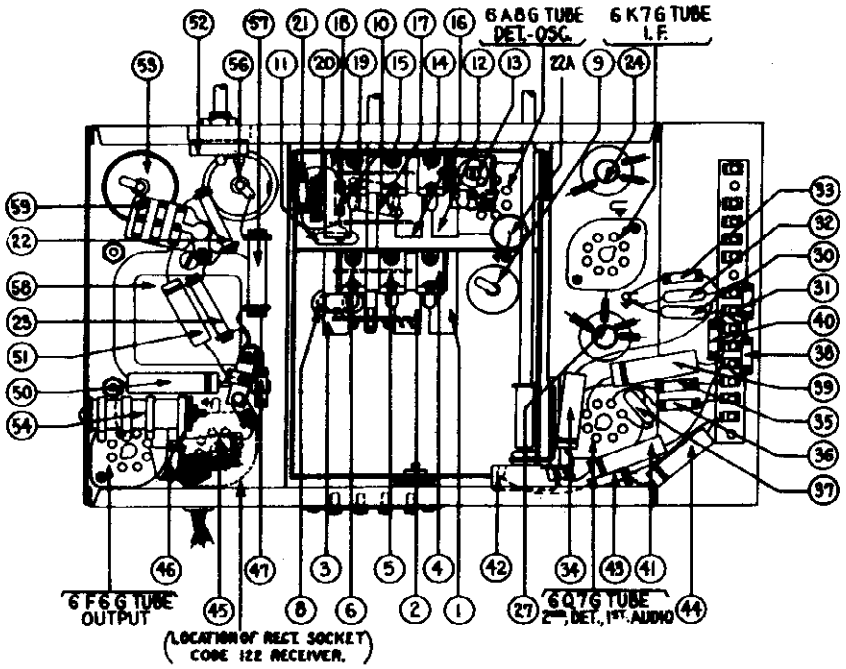

Fig. 6—Base View of Chassis

Replacement Parts—Model 37-610

Schem. No.	Description	Part No.	Price List
①	Antenna Transformer (Broadcast)	32-2108	$0.80
②	Antenna Transformer (Police)	32-2110	.65
③	Antenna Transformer (Short-Wave)	32-2109	.75
④	Compensator (Broadcast)	31-6982	.60
⑤	Compensator Ant. (Police)	Part of ②	
⑥	Compensator Ant. (Short-Wave)	Part of ③	
⑦	Tuning Condenser	31-1821	3.50
⑧	Condenser (.05 mfd. Tubular)	30-4080	.20
⑨	Electrolytic Condenser 16 mfd.	30-2116	1.05
⑩	Resistor (10000 ohm ½ watt)	33-310839	.20
⑪	Condenser (250 mmfd. Mica)	30-1082	.25
⑫	Oscillator Transformer (Broadcast)	32-2120	.65
⑬	Compensator Osc. Series 600 K.C.	31-6986	.55
⑭	Compensator Osc. 1500 K.C.	31-6982	.60
⑮	Compensator Osc. 7.0 Meg.	Part of ⑭	
⑯	Oscillator Transformer (Police)	32-2121	.40
⑰	Condenser (Semi-fixed 1650 mfd.)	31-6096	.40
⑱	Oscillator Transformer (S.W.)	32-2119	.75
⑲	Compensator (Osc. 18.0 megacycles)	Part of ⑱	
⑳	Condenser (Semi-fixed 3500 mfd.)	31-6097	.50
㉑	Resistor (32000, ½ watt)	33-332839	.20
㉒	Resistor (51000, ½ watt)	33-351339	.20
㉓A	Condenser (.1 mfd. Tubular)	30-4170	.25
㉔	Resistor (20000 ohm, ½ watt)	33-320439	.20
㉕	1st I. F. Transformer	32-2100	1.50
㉖	Compensator 1st I. F. Transformer	Part of ㉕	
㉗	Compensator 1st I. F. Transformer	Part of ㉕	
㉘	2nd I. F. Transformer	32-2102	1.50
㉙	Compensator 2nd I. F. Transformer	Part of ㉘	
㉚	Compensator 2nd I. F. Transformer	Part of ㉘	
㉛	Condenser (110 mmfd. Mica)	30-1081	.20
㉜	Resistor (51000 ohm, ½ watt)	33-351339	.20
㉝	Condenser (110 mmfd. Mica)	30-1081	.20
㉞	Resistor (490000 ohm ½ watt)	33-449839	.20
㉟	Condenser (.01 mfd. Tubular)	30-4124	.25
㊱	Resistor (1 megohm ½ watt)	33-510839	.20
㊲	Resistor (1 megohm ½ watt)	33-510839	.20
㊳	Condenser (110 mfd. Mica)	30-1081	.20
㊴	Resistor (1 megohm ½ watt)	33-510839	.20
㊵	Condenser (0.1 mfd. Tubular)	30-4122	.20
㊶	Resistor (490000 ohms, ½ watt)	33-449839	.20
㊷	Condenser (.015 mfd. Tubular)	30-4383	.20
㊸	Volume Control	33-5158	1.00
㊹	Resistor (51000, ½ watt)	33-510339	.20
㊺	Condenser (.006 mfd. Tubular)	30-4112	.20
㊻	Condenser (.015 mfd. Tubular)	30-4326	.20
㊼	Resistor (1 megohm ½ watt)	33-510839	.20
㊽	Resistor (70000 ohm ½ watt)	33-370839	.20
㊾	Output Transformer	32-7019	.85
㊿	Voice Coil and Cone	36-3157	.80
51	Condenser (.03 mfd. Tubular)	30-4360	.20
52	Condenser (.006 mfd. Tubular)	30-4112	.20
53	Tone Control and AC Switch	42-1182	.75
54	Electrolytic Condenser (8 mfd.)	30-2034	1.10
55	Resistor C-Bias	33-3277	.20
56	Field Coil Assembly	36-3089	2.75
57	Electrolytic Condenser (12 mfd.)	30-2117	1.20
58	Resistor (9000 ohm 2 watt)	33-390539	.30
⑨	Power Transformer 50-60 cycle 115 volts	32-7582	$4.25
	Power Transformer 25-40 cycle 115 volts	32-7584	
	*Power Transformer 50-60 cycle 115 volts Code 122	32-7636	
	**Power Transformer 25-40 cycle 115 volts Code 122	32-7637	
⑩	Condenser (Twin Bakelite, .015-.015 mfd.)	3793 DG	.40
⑪	Pilot Lamp	34-3089	.15
⑫	Wave Switch Antenna Section	42-1170	1.10
⑬	Wave Switch Osc. Section	42-1172	1.10
	I. F. Wiring Panel	38-7703	.25
	I. F. Wiring Panel Spacer	28-4001 Per C	.26
	Ant. Panel	38-7714	
	Tube Socket 7 prong	27-6067	.11
	Tube Socket 8 prong	27-6058	.11
	Tube Socket Rectifier, Code 122	27-6083	.11
	Tube Shield	28-3736	.10
	I. F. Transformer Shield	38-7703	.20
	AC Cable	L-2182	.40
	Speaker Cable	L-2181	.26
	Grommet Mtg. Tuning Condenser	27-4326	.02
	Grommet Mtg. R. F. Unit	27-4317	.04
	Mtg. Sleeve R. F. Unit	28-2367 FA-3	.01
	Mtg. Screw R. F. Unit	W-729 FA-3 Per C	.46
	Mtg. Washer R. F. Unit	28-3927	.01
	Pilot Lamp Assembly	38-7706	.25
	Bracket Electrolytic Condenser	6440	.05
	Bracket Screw Electrolytic Condenser	W-1446 FA-3 Per C	.40
	Bracket Nut Electrolytic Condenser	W-55 FA-3 Per C	.20
	Chassis Mtg. Screw	W-1358A Per C	2.00
	Wave Switch Indexing Plate & Shaft	42-1173 Rev-E	.50
	Dial	27-5203	.50
	Dial Hub	28-7187 FA-3	.12
	Dial Set Screw	W-1941	.02
	Dial Clamp	28-2887 FA-3	.10
	Dial Screen Assembly	38-7912	.10
	Dial Gear	28-7185	.10
	Drive Gear	31-1884	.25
	Scale Guard	27-6234	.02
	Dial Gear Thrust Spring	28-3611	.01
	Dial Gear C. Washer	28-3904	.01
	Dial Gear Thrust Washer	28-3976	.30
	Mask	27-6196	.30
	Mask Washer	27-6216 Per C	.50
	Mask Arm and Link Assembly	31-1866	.35
	Mask Guide	38-7844	
	Spring	28-6634 Per C	.50
	Lens	27-6210	.02
	Knob Tuning Control	27-4330	.10
	Knob Vernier	27-4331	.10
	Knob—Tone & Volume	27-4332	.10
	Knob—Wave Switch	27-4326	.10
	Volume Control Shaft	28-6499	.10
	Volume Control Spring	28-4117 Per C	.40
	Retaining Clip	28-6610	.02
	Washer	28-4186 Per C	.75
	Washer	4436 Per C	1.50
	Nut Tone Volume Controls	W-684 FA-3 Per C	1.25
	Speaker S7	36-1009	
	Speaker HS	36-1220	

*Code 122, **Code 122, 25 cycle operation.

PRICES SUBJECT TO CHANGE WITHOUT NOTICE

©John F. Rider, Publisher

PHILCO RADIO & TELEV. CORP.

MODEL 37-611
Schematic
Parts

Frequency Ranges:—Range 1—530 to 1720 K.C.; Range 2—2.3 to 7.4 M.C.; Range 3—7.35 to 22 M.C.
Intermediate Frequency: 470 K.C.
Speakers: S-15—"B", "F", "T" Cabinets. HS-2—"J" Cabinet.

September, 1936

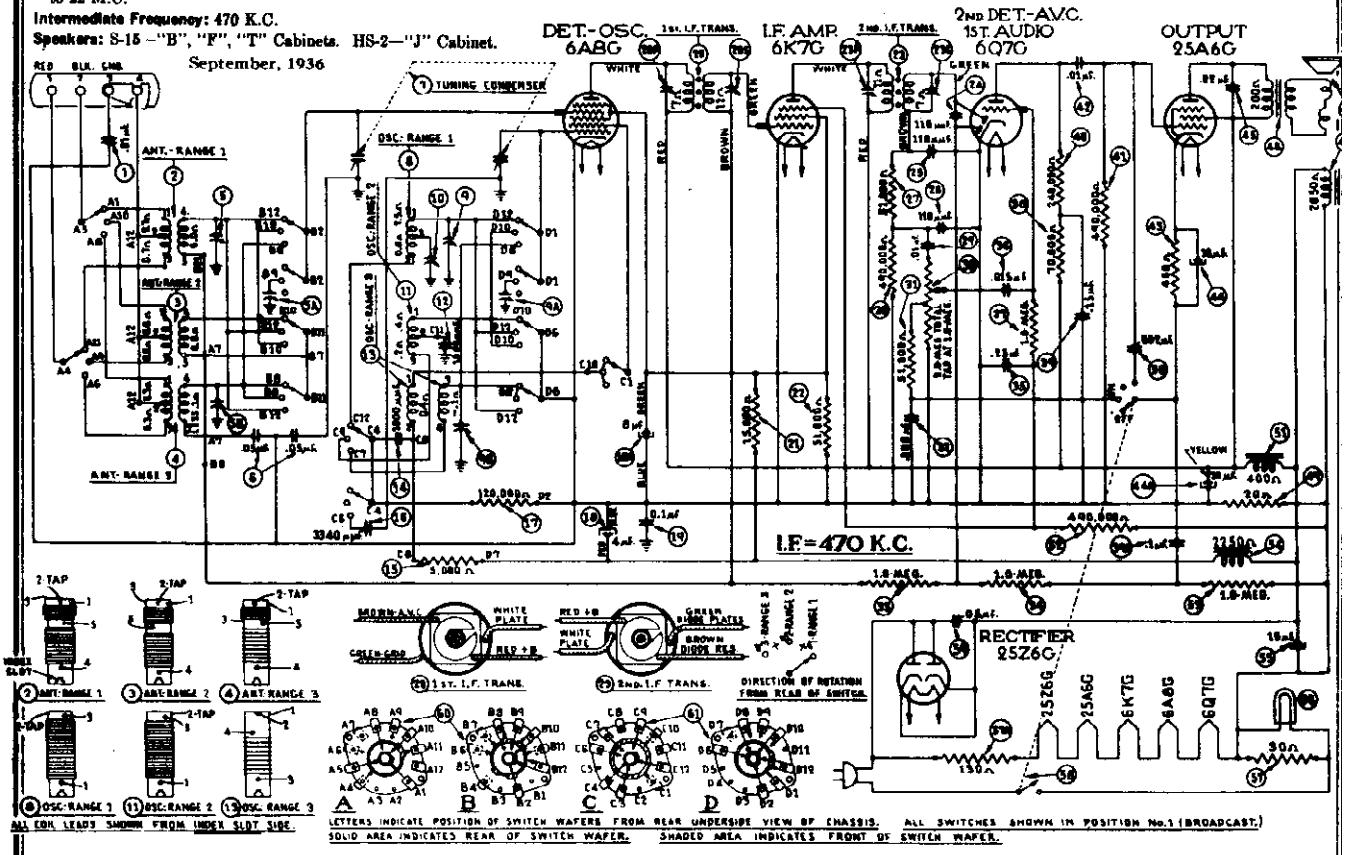

Power Supply: 115 volts, alternating or direct current.
Power Consumption: 55 watts.

Fig. 5—Schematic Diagram

Replacement Parts—Model 37-611

Schem. No.	Description	Part No.	List Price
1	Condenser .01 mfd. tubular	30-4145	$0.20
2	Antenna Transformer (Range 1)	32-2106	.80
3	Antenna Transformer (Range 2)	32-2119	.65
4	Antenna Transformer (Range 3)	32-2109	.75
5	Compensator (3 sections)	31-6092	.60
6	Condenser (.05 mfd. dual tubular)	30-4394	.35
7	Tuning Condenser	31-1821	3.50
8	Oscillator Transformer (Range 1)	32-2120	.65
9	Compensator (3 sections Osc.)	31-6092	.60
10	Compensator (Osc. series 580 K.C.)	31-6056	.55
11	Oscillator Transformer (Range 2)	32-2121	.40
12	Condenser (1650 mmfd.)	31-6096	.40
13	Oscillator Transformer (Range 3)	32-2110	.75
14	Condenser (1000 mmfd. tubular)	30-4453	.20
15	Resistor (5000 ohms ½ watt)	33-350339	.20
16	Condenser (3500 mmfd.)	31-6097	.50
17	Resistor (120000 ohms ½ watt)	33-412339	.20
18	Electrolytic Condenser (4-8 mfd.)	30-2157	
19	Condenser (.01 mfd. tubular)	30-4122	.20
20	1st I. F. Transformer Assembly	32-2100	1.50
21	Resistor (15000 ohms ½ watt)	33-315339	.20
22	Resistor (51000 ohms ½ watt)	33-351339	.20
23	2nd I. F. Transformer Assembly	32-2102	1.50
24	Condenser (110 mmfd. mica)	30-1031	.20
25	Condenser (110 mmfd. mica)	30-1031	.20
26	Condenser (110 mmfd. mica)	30-1031	.20
27	Resistor (51000 ohms ½ watt)	33-351339	.20
28	Resistor (490000 ohms ½ watt)	33-449339	.20
29	Condenser (.01 mfd. tubular)	30-4124	.25
30	Volume Control	33-5158	1.00
31	Resistor (51000 ohms ½ watt)	33-351339	.20
32	Condenser (.008 mfd. tubular)	30-4112	.20
33	Resistor (1.0 megohm ½ watt)	33-510339	.20
34	Resistor (1.0 megohm ½ watt)	33-510339	.20
35	Condenser (.25 mfd. tubular)	30-4446	.25
36	Condenser (.015 mfd. tubular)	30-4358	.20
37	Resistor (1.0 megohms ½ watt)	33-510339	.20
38	Resistor (70000 ohms ½ watt)	33-370339	.20
39	Condenser (.15 mfd. dual bakelite)	4989-DU	.40
40	Resistor (240000 ohms ½ watt)	33-424339	.20
41	Resistor (490000 ohms ½ watt)	33-449339	.20
42	Condenser (.01 mfd. bakelite)	3903-SU	.25
43	Resistor (400 ohms wirewound)	33-3122	.25
44	Electrolytic Condenser (10-20 mfd.)	30-2166	
45	Condenser (.02 mfd. tubular)	30-4113	$0.20
46	Output Transformer HS-2, S-15	32-7395	1.10
47	Cone Voice Coil HS-2	36-3627	1.00
	Cone Voice Coil S-15	36-3157	.80
48	Field Coil HS-2	36-3519	2.80
	Field Coil S-15	36-3519	2.80
49	Resistor (20 ohms Flexible)	33-3043	.25
50	Condenser (.002 mfd. tubular)	30-4177	.25
51	Choke	32-7668	1.20
52	Resistor (490000 ohms ½ watt)	33-449339	.20
53	Resistor (1.0 megohm ½ watt)	33-510339	.20
54	Choke	32-7667	1.60
55	Electrolytic Condenser (16 mfd.)	30-2124	.75
56	Pilot Lamp		
57	Resistor (30-130 ohms wirewound)		.60
58	Tone Control & Power Switch		.75
59	Condenser (.05 mfd. tubular)		.20
60	Range Switch (Ant.)		1.20
61	Range Switch (Osc.)	42-1246	1.20
	Pilot Lamp Assembly	38-7910	
	Switch Index Plate & Shaft	42-1173	.50
	Dial	27-5203	.50
	Hub	28-7187	.12
	Clamp	28-2837	.10
	Set Screw	W-1641	.02
	Dial Gear	28-7185	.10
	Drive Gear & Hub Assembly	31-1884	.25
	Thrust Spring	28-8611	.01
	Thrust Washer	28-3976	.30 C
	C Washer	28-3904	.01
	Mask	27-5198	.30
	Mask Arm & Link Assembly	31-1866	.35
	Mask Guide & Pilot Lamp Bracket	38-7844	.15
	Mask Washer	27-8318	.50 C
	Ind. Bracket & Lens Assembly	38-7912	.30
	Scale Guard	27-8324	.02
	Volume Control Shaft	38-8059	
	Shaft Spring	28-4117	.40 C
	Retaining Clip	28-4394	.01
	Tube Socket (7 Prong)	27-6057	.11
	Tube Socket (8 Prong)	27-6058	.11
	Tube Shield	28-2726	.10
	Shield Base	28-3898	$0.03
	Mtg. Grommet R. F. Unit	27-4317	.04
	Mtg. Sleeve R. F. Unit	28-2257	.01
	Mtg. Screw R. F. Unit	W-729	.45 C
	Mtg. Washer R. F. Unit	28-3927	.01
	Mtg. Washer Felt R. F. Unit	27-7807	.50 C
	Mtg. Rubber Tuning Condenser	27-4325	.02
	Mtg. Transformer Plate	28-3808	.02
	Spacer	27-8228	.01
	Screw	W-1635	.30 C
	Rubber Washer	5189	.03
	Rubber Bushing	27-4360	.04
	Chassis Mtg. Screw	W-1495	1.50 C
	Washer	28-2089	.50 C
	Knob Tuning Control	27-4330	.10
	Knob Vernier	27-4331	.10
	Knob Tone Volume	27-4332	.10
	Knob Range Switch	27-4326	.10
	Bottom Shield Plate	28-4234	
	Snap Fasteners	28-4279	.75 C
	Bottom Shield Plate T Cabinet	28-4358	
	Bezel Plate & Frame	40-4939	.75
	Gasket	27-8311	.01
	Screw	W-1644	.50 C
	Glass	27-8298	.05
	A. C. Cable	L-2183	.40
	Speaker Cable	L-2218	
	Speaker S-15 ("B", "T", "F" Cabinets)	36-1173	5.75
	Speaker HS-2 ("J" cabinet)	36-1255	
	"B" CABINET		
	Baffle Silk Assembly	40-5968	.30
	"F" CABINET		
	Baffle Silk Assembly	40-5933	.75
	"J" CABINET		
	Baffle Silk Assembly	40-5971	.80
	"T" CABINET		
	Baffle Silk Assembly	40-5969	.30

Figures in black type indicate circled figures on Base View. Prices Subject to Change without Notice

©John F. Rider, Publisher

MODEL 37-611
Voltage, Socket
Trimmers
Alignment

PHILCO RADIO & TELEV. CORP.

Alignment of Compensators

To accurately adjust this receiver, precision test equipment is necessary. A signal generator such as the **Philco Model 088 Signal Generator**, covering from 110 to 20,000 K.C. is recommended to adjust the compensators at the various frequencies specified. A visual indication of the receiver output is also necessary to obtain correct adjustment of the compensators. **Philco Model 025 Circuit Tester** contains a sensitive output meter and is recommended for these adjustments. Philco Fibre Handle Screw-driver No. 27-7059 and Tuning Condenser Part No. 45-2325 complete the necessary equipment for these adjustments. The locations of the various compensators are shown in Figs. 2 and 3.

The following procedure must be observed in adjusting the compensators:—

DIAL ADJUSTMENT—In order to adjust this receiver correctly, the dial must be aligned to track properly with the tuning condenser. To do this, rotate the tuning condenser control to the extreme counter-clockwise position (maximum capacity). Loosen the set screw of dial hub, then turn dial until the glowing indicator is centered between the index lines of dial scale. Now tighten the dial hub set screw in this position.

OUTPUT METER—The 025 Output Meter is connected to the plate and cathode terminals of the (25A6G) tube. Adjust the meter to use the (0-30) volt scale.

INTERMEDIATE FREQUENCY CIRCUIT

Frequency 470 K. C.

1. Connect the 088 Signal Generator output lead through a .1 mfd. condenser to the control grid of the 6A8G, and the ground connection of output lead to the chassis.

2. The tuning range switch is set in position No. 1 (Broadcast). Rotate the tuning condenser of the receiver to the maximum capacity position (counter-clockwise), and adjust the signal generator for 470 K. C.

3. Adjust compensators (**23S**) 2nd I. F. Sec., (**23P**) 2nd I. F. Pri., (**20S**) 1st I. F. Sec. and (**20P**) 1st I. F. Pri. for maximum reading on the output meter.

RADIO FREQUENCY CIRCUIT

Tuning Range—7.3 to 22.0 M. C.

1. Remove the signal generator output lead from the grid of the 6A8G tube and connect it with the .1 mfd. condenser to terminal No. 1 on the aerial input panel and the generator ground lead to terminal No. 3, rear of chassis. Terminals 2 and 3 must be connected by the shorting link provided on the panel.

2. Set the range switch in position 3. Turn the receiver and signal generator dials to 18 M. C. Now adjust compensator (**5S**) by turning the screw (clockwise) to the maximum capacity position, then slowly turning it (counter-clockwise) until a second peak signal is reached on the output meter. The first peak from maximum capacity is the image signal and must not be used. If the above procedure is correctly performed, the image signal will be found at 17.06 M. C., by advancing signal generator attenuator and turning receiver dial to this frequency mark on the scale.

3. The antenna compensator (**5S**) is now adjusted by connecting a variable condenser of approximately 350 mmfd., Philco Part No. 45-2325, across the oscillator section of the gang condenser and ground. Leaving the signal generator and receiver dials at 18 M. C. tune the added condenser from the maximum capacity point until the second harmonic of the receiver oscillator beats against the signal from the generator thereby bringing in the signal. The antenna compensator (**5S**) is then adjusted for maximum output. Now remove the external condenser and readjust compensator (**9S**) as given in paragraph 2 above.

Tuning Range: 2.3 to 7.4 Megacycles.

1. Turn the range switch to position No. 2 (Police). Rotate the signal generator and receiver dials to 7.0 M. C. Then adjust compensator (**9A**) for maximum output. Now turn the signal generator and receiver dials to 6.0 M. C. and adjust compensator (**5A**) for maximum reading on output meter.

Tuning Range: 530 to 1720 Kilocycles.

1. Set the range switch in position No. 1 (Broadcast). Rotate the signal generator and receiver dials to 1600 K. C. Now adjust compensators (**9**) Osc., and (**5**) Ant. for maximum output.

2. Rotate the signal generator and receiver dials to 580 K. C. Compensator (**10**) Osc. series is now adjusted for maximum output as follows:

First tune compensator (**10**) for maximum output, then vary the tuning condenser of the receiver for maximum output about the 580 K. C. dial mark. Now turn the compensator (**10**) slightly to the right or left and vary the receiver tuning condenser for maximum output. If the output reading increases, turn compensator (**10**) in the same direction a trifle more, and again vary the tuning condenser for maximum output. If the output decreases, set the compensator in the opposite direction. This procedure of first setting the compensator and then varying the tuning condenser is continued until there is no further gain in output reading.

3. Readjust compensator (**9**) for maximum output, by turning signal generator and receiver dials to 1600 K. C.

4. Turn the signal generator and receiver dials to 1500 K. C. and adjust compensator (**5**) Ant. for maximum output.

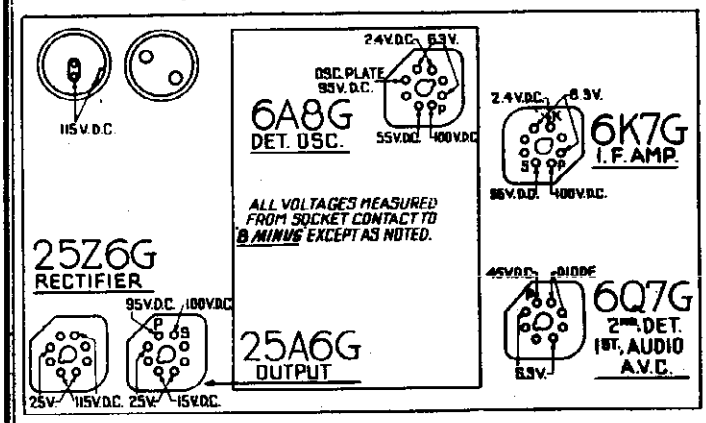

Fig. 1—Socket Voltages—Underside of Chassis View

The voltages indicated by arrows were measured with a **Philco 025 Circuit Tester** which contains a voltmeter having a resistance of 1000 ohms per volt. Volume Control at minimum, range switch in broadcast position, line voltage 115 A. C.

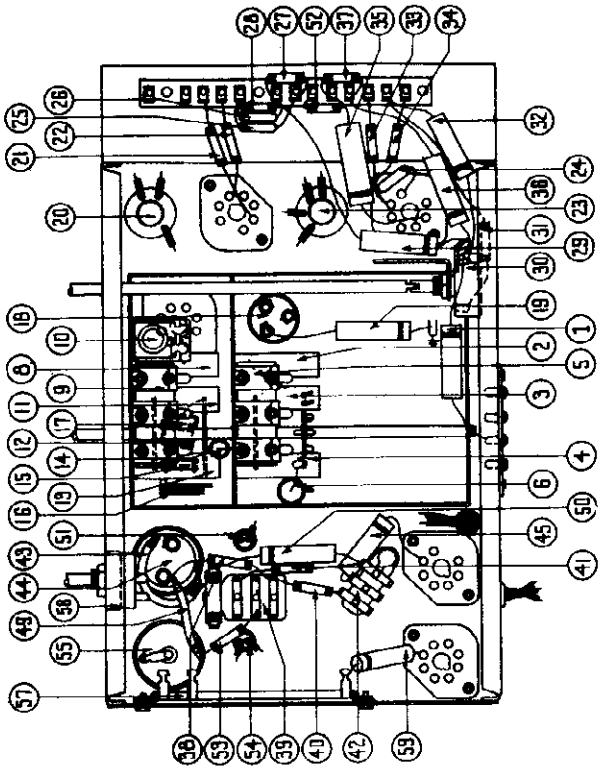

Fig. 4—View of Parts from Underside of Chassis

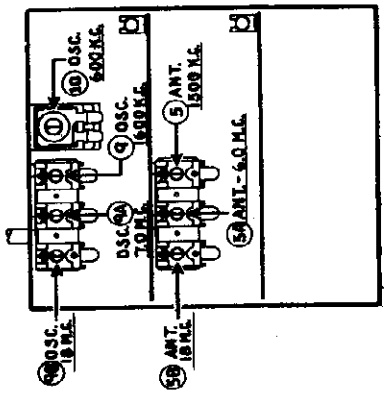

Fig. 3—R. F. Compensators

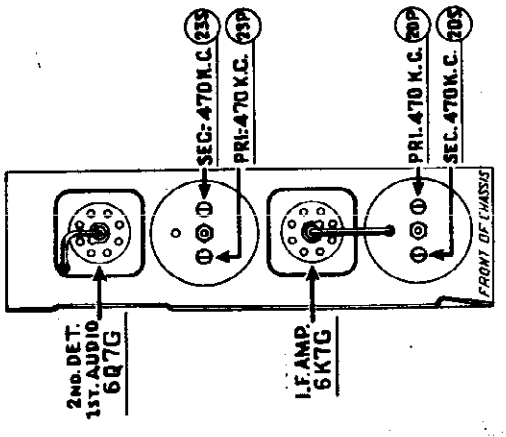

Fig. 2—I. F. Compensators

©John F. Rider, Publisher

PHILCO RADIO & TELEV. CORP.

MODEL 37-620
Schematic
Coil Data

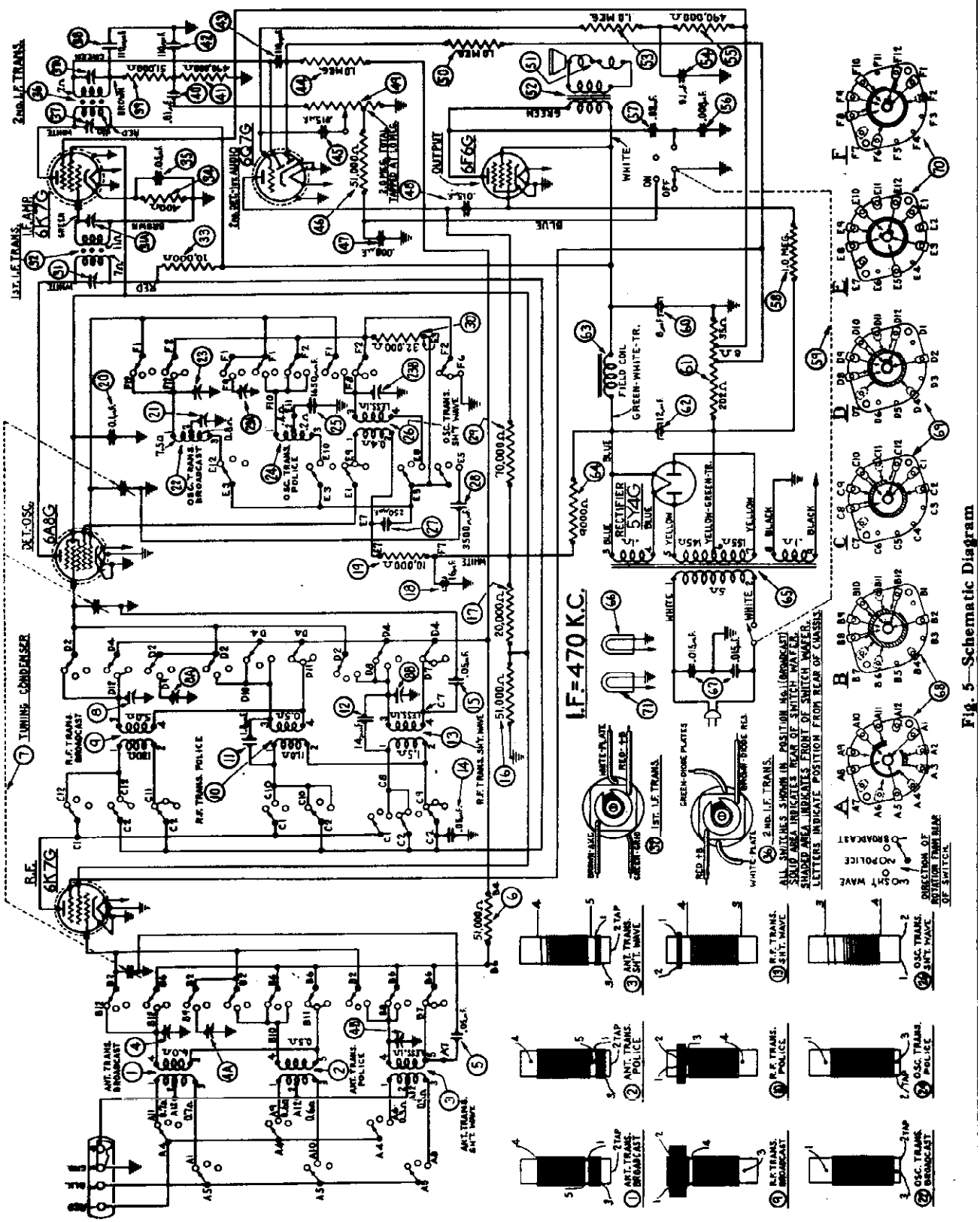

Fig. 5—Schematic Diagram

©John F. Rider, Publisher

MODEL 37-620
Circuit Data
Voltage
Transformer Data

PHILCO RADIO & TELEV. CORP.

Electrical Specifications

Voltage Rating: 115 Volts AC.

Frequency Rating: 50 to 60 cycles.
For 25 to 40 cycle operation, the Power Transformer marked with asterisk in the parts list is used.

Power Consumption: 65 Watts

Types and Number of Tubes: 2 type 6K7G, R. F. and I. F. Amplifiers; 1 type 6A8G, Detector-Oscillator; 1 type 6Q7G, 2nd Detector, Automatic Volume Control and 1st Audio; 1 type 6F6G, Output; and 1 type 5Y4G Rectifier.

Undistorted Output: 3 watts.

Intermediate Frequency: 470 K. C.

Tuning Ranges: Three, Range 1.—530 to 1720 Kilocycles; Range 2.—2.3 to 7.4 Megacycles; Range 3.—7.35 to 22 Megacycles.

Speakers: B Cabinet—S-7.
J Cabinet—HS.

General Description

Model 37-620 is a 6 tube superheterodyne receiver for operation on alternating current, having three tuning ranges, covering standard broadcast and short-wave frequencies, and using the new Philco High-Efficiency self-centering glass tubes.

The circuit includes the Philco "Foreign Tuning System"—controlled by the tuning range switch—which provides maximum sensitivity and noise reduction, when used with the Philco High Efficiency Aerial supplied with the receiver. One stage of Radio Frequency amplification which greatly increases the signal-to-noise ratio, automatic bass compensation in the volume control circuit, and a separate diode circuit for automatic volume control are also incorporated in this receiver.

The red and black leads of the High-Efficiency Aerial "transmission line" are connected to terminals 1 and 2 respectively, of the terminal panel provided at the rear of the chassis. Connect the jumper on the terminal panel across terminals 3 and 4.

If a temporary aerial is used, the jumper should be across terminals 2 and 3. The aerial connects to terminal 1 and the ground to terminal 3.

A good ground connection is desirable in all installations. Make the ground connection from the nearest water or radiator pipe to terminal 3 on the terminal panel.

CONSTRUCTION

The chassis is constructed in three basic assembly units, concentrating each circuit in a single unit.

(1) The Radio Frequency unit, located in the center of the chassis, contains a 6K7G tube which functions as a Radio Frequency Amplifier; a 6A8G tube, for the Detector-Oscillator circuit; individual Antenna, R. F. Amplifier and Oscillator coils for each tuning range; selector switch; compensating condensers for all coils; and other parts necessary for the associated circuits. The unit is separately mounted on rubber grommets, cushioning it from the main chassis.

(2) The Intermediate Frequency unit, mounted on the right hand side of the chassis (facing front of set) consists of the intermediate Frequency transformers, compensating condensers, a 6K7G tube for the I. F. Amplifier stage, and a 6Q7G tube as the second detector—automatic volume control and first audio stage. All voltages supplied to the I. F. and R. F. units are furnished from a terminal strip mounted on this unit.

(3) The Power Pack and Audio Output circuits, together with the required voltage dividers and filter condensers are mounted in the power unit. This unit contains a 6F6G tube and a 5Y4G tube for the Power output and rectifier circuits respectively; and the combined tone control and power switch. The socket for the 5Y4G tube is mounted on the power transformer.

Schematic Diagram Fig. 5 is numbered, indicating all important parts. These numbers correspond with the parts layout shown in Fig. 6. In addition, the range switch wafers are shown on the schematic diagram. The contacts on each wafer are lettered and numbered to indicate their connection points in the schematic diagram, which are also lettered and numbered. The physical drawings of each coil used in the receiver are also shown on schematic diagram Fig. 5. The connections of these coils are numbered on the coil Drawing and on the schematic diagram.

Fig. 1 shows the Voltage measurements taken from the bottom of the sockets at each contact. In Fig. 2, the correct position of the dial indicator, for proper adjustment of the compensator condenser is shown. Fig. 3 and 4 are the locations of the I. F. and R. F. compensators respectively.

This receiver is used in cabinets type B and J. These instructions, however, will cover both types.

Fig. 1—Socket Voltages
Measured from Socket Contact to Ground
Underside of Chassis View

The voltages indicated by arrows were measured with a Philco 025 Circuit Tester which contains a voltmeter having a resistance of 1000 ohms per volt. Volume Control at minimum. Range Switch in broadcast position. Line voltage 115 A. C.

POWER TRANSFORMER DATA

Lead No. Shown on Schematic	A.C. Volts	Current	Circuit	Color	Resistance
1-2	120	—	Pri.	White	.5 ohms
3-4	5.0	2.0 A.	Fil. Rectifier	Blue	.1 ohm
5-7	670	70 Ma.	High Voltage Sec.	Yellow	145 ohms 155 ohms
6	—	—	Center Tap of 5-7	—	—
8-9	6.7	2.1 A.	Fil.	Black	.1 ohm

Run 2.

While the circuit arrangement remains the same, the position of the parts is slightly changed in this Run. Bakelite condenser ⑨ Part No. 3793-DG is removed from front and placed in the rear of the chassis. Tubular condenser ⑨ Part No. 30-4380 is replaced with a Part No. 8318-SU bakelite condenser, placed in the position formerly held by 3793-DG.

©John F. Rider, Publisher

PHILCO RADIO & TELEV. CORP.

MODEL 37-620
Trimmers
Alignment

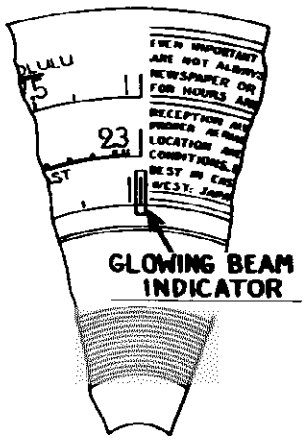

Fig. 2—Dial Calibration

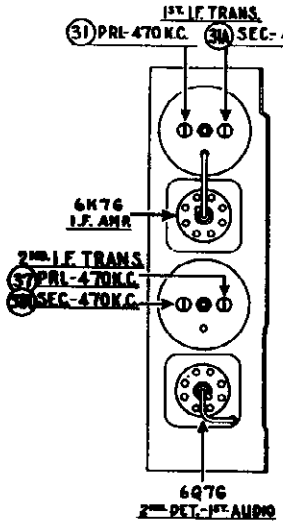

Fig. 3—Locations of I. F. Compensators

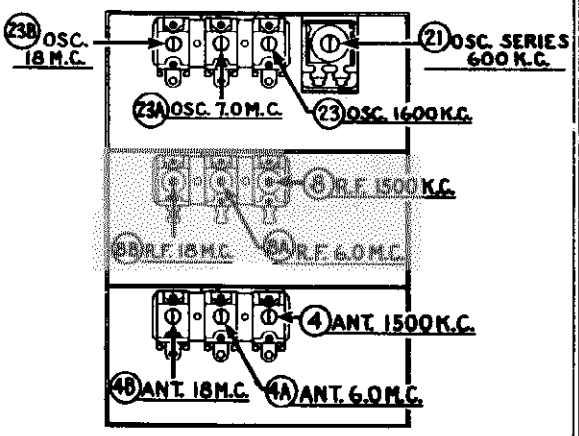

Fig. 3—Locations of R. F. Compensators

Adjustment of Compensators

The accurate adjustment of the various compensating condensers is vital to the proper functioning of this receiver. There are four compensating condensers in the I. F. Circuit, four in the Oscillator Circuit, three in the R. F. Amplifier Circuit and three in the Antenna Circuit. Incorrect adjustment will cause loss of sensitivity, unsatisfactory tone, and poor selectivity.

To accurately adjust this receiver, precision test equipment is necessary. A signal generator such as the PHILCO MODEL 088 SIGNAL GENERATOR, covering from 110 to 20,000 K. C. is recommended for adjusting the compensators at the various frequencies specified. A visual indication of the receiver output is also necessary to obtain correct adjustment of the compensators. PHILCO MODEL 025 CIRCUIT TESTER contains a sensitive output meter and is recommended for these adjustments.

Philco Fibre Handle Screw-driver No. 27-7059 completes the necessary equipment for these adjustments. The locations of the various compensators are shown in Figs. 3 and 4.

The following procedure must be observed in adjusting the compensators:—

DIAL CALIBRATION—In order to adjust this receiver correctly, the dial must be aligned to track properly with the tuning condenser. To do this, rotate the tuning condenser control to the extreme counter-clockwise position (maximum capacity). Loosen the screw of dial hub, then turn dial until the glowing indicator is centered on the first index line of dial scale (see Fig. 2). Now tighten the dial hub set screw in this position.

OUTPUT METER—The 025 Output Meter is connected to the plate and cathode terminals of the (6F6G) tube. Adjust the meter to use the (0-30) Volt Scale.

During the I. F. and R. F. adjustments, the signal generator output should be maintained at the lowest possible level that will give indication on the output meter.

INTERMEDIATE FREQUENCY CIRCUIT

Frequency 470 K. C.

1 Connect the 088 Signal Generator output lead, through a .1 mfd. condenser, to the control grid of the 6A8G tube; and the ground connection of the output lead to the chassis.

2 Set the range switch in position No. 1 (Broadcast), then rotate the tuning condenser of the receiver to the maximum capacity position (counter-clockwise), and adjust the signal generator for 470 K. C.

3 Adjust compensators ㊱a 2nd I. F. Sec., ㊲ 2nd I. F. Pri., ㉛a 1st I. F. Sec., and ㉝ 1st I. F. Pri. for maximum reading on output meter.

RADIO FREQUENCY CIRCUIT

Tuning Range—7.3 to 22.0 M. C.

1 Remove the signal generator output lead from the grid of 6A8G tube, and connect it through a .1 mfd. condenser to terminal No. 1 on aerial input panel, and the generator ground lead to terminal No. 3, rear of chassis.

(a) Terminals 2 and 3 of aerial input panel must be connected with connector link provided on the panel, during these adjustments.

2 Set the tuning range switch in position No. 3 (Short Wave). Turn the signal generator and receiver dials to 18. M. C. and adjust compensators ㉓b Osc., ⑧b R. F. and ④b Ant. for maximum output. (See Note (a) below).

(a) The adjustment of the Radio Frequency compensator on the high frequency range causes a slight detuning of the oscillator circuit. In order to overcome this detuning effect, connect a variable condenser of approximately 350 mmfd., having a good vernier drive, across the oscillator section of the tuning condenser. Leaving the signal generator and receiver dials at 18 M. C., tune the added condenser so that the second harmonic of the receiver oscillator will beat against the signal from the 088 signal generator bringing in the signal. The antenna and R. F. compensator ④b and ⑧b should then be adjusted to give maximum output. Now remove the external condenser and turn compensator ㉓b to maximum capacity (clockwise) then without moving signal generator or receiver tuning condenser, back off compensator ㉓b (counter-clockwise) until a second peak is reached on the output meter. The first peak is caused by tuning to the image frequency signal and must not be used.

Tuning Range 2.3 to 7.4 M. C.

1 Turn the range switch to position No. 2 (police). Rotate the signal generator and receiver dials to 7.0 M. C. Then adjust compensator ㉓a for maximum output. Now turn the signal generator and receiver dials to 6.0 M. C. and adjust compensators ⑧a R. F. and ④a Ant. for maximum reading on the output meter.

Tuning Range 530 to 1720 K. C.

1 Set the range switch in position No. 1 (Broadcast). Set the 088 Signal Generator indicator at 800 K. C. and the receiver dial at 1600 K. C.

(a) In adjusting the receiver at 1600 K. C. the second harmonic of 800 K. C., to which the signal generator is tuned, is used. The second harmonic of 800 K. C. is 1600 K. C. Now adjust compensators ㉓ Osc., ⑧ R. F. and ④ Ant. for maximum reading on output meter.

2 The low frequency end of the range is now tuned by turning the signal generator and receiver dials to 600 K. C. and adjusting compensator ㉑ Osc. Series—(see Note (a) below)—for maximum reading on output meter.

(a) While compensator ㉑ is being adjusted, the tuning condenser must be rolled for maximum output. This is accomplished as follows:—First tune compensator ㉑ for maximum output. Then vary the tuning condenser for maximum output at 600 K. C. Now retune compensator ㉑, and again vary the tuning condenser back and forth at 600 K. C. for maximum output. This operation of first turning the compensator then the tuning condenser is continued until maximum output is obtained at the 600 K. C. frequency.

3 After the low frequency (600 K. C.) end of the range is adjusted, the 1600 K. C. end is readjusted, as given in Paragraph (1) above, to correct any variation that the low frequency series compensator may have caused in the alignment of the high frequency end.

4 Now turn the signal generator and receiver dials to 1500 K. C. and readjust compensators ④ ant., and ⑧ R. F., for maximum output.

©John F. Rider, Publisher

MODEL 37-620
Chassis
Speaker Data
Parts List

PHILCO RADIO & TELEV. CORP.

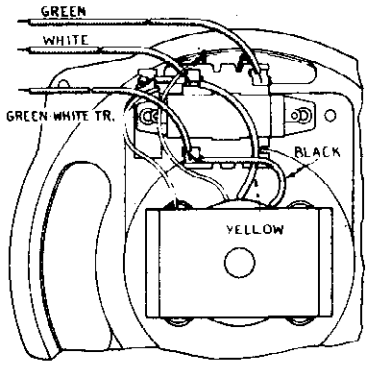

Speaker Wiring

When replacing any part of the speaker, the hum bucking coil connections should be connected for minimum hum.

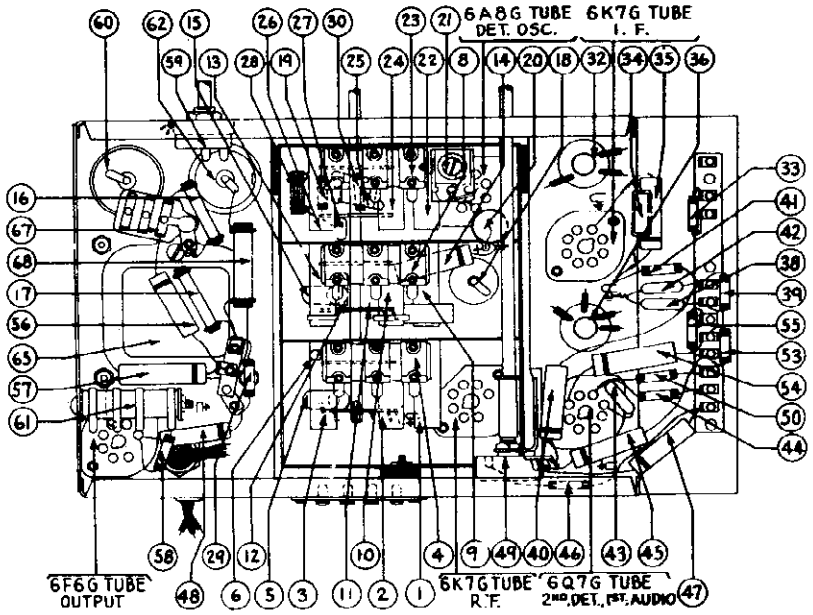

Fig. 6—Base View

Replacement Parts—Model 37-620

Schem. No.	Description	Part No.	Price List
1	Antenna Transformer (Broadcast)	32-2106	$0.80
2	Antenna Transformer (Police)	32-2119	.65
3	Antenna Transformer (S. W.)	32-2109	.75
4	Compensator Ant. 1500 K.C.	31-6092	.60
5	Condenser (.05 mfd. Tubular)	30-4020	.20
6	Resistor (51000 ohms ½ watt)	33-351339	.20
7	Tuning Condenser	31-1818	4.50
8	Compensator (R. F. 1500 K.C.)	31-6092	.60
9	R. F. Transformer (Broadcast)	32-2105	.75
10	R. F. Transformer (Police)	32-2106	.65
11	Condenser (1.0 mmfd.)		
12	Condenser (14 mmfd. Mica)	30-1073	.20
13	R. F. Transformer (S. W.)	32-2125	.55
14	Condenser (.05 mfd. Tubular)	30-4123	.20
15	Condenser (.05 mfd. Tubular)	30-4020	.20
16	Resistor (51000 ohms 1 watt)	33-351439	.20
17	Resistor (20000 ohms 1 watt)	33-320439	.20
18	Electrolytic Condenser (16 mfd.)	30-2118	1.65
19	Resistor (10000 ohms ½ watt)	33-310339	.20
20	Condenser (.1 mfd. Tubular)	30-4170	.25
21	Compensator (Osc. Series 600 K.C.)	31-6056	.55
22	Osc. Transformer (Broadcast)	32-2120	.65
23	Compensator (Osc. 1600 K.C.)	31-6092	.60
24	Osc. Transformer (Police)	32-2121	.40
25	Condenser (1680 mmfd. Semi-fixed)	31-6096	.40
26	Osc. Transformer (S.W.)	32-2110	.75
27	Condenser (250 mmfd. Mica)	30-1032	.25
28	Condenser (3500 mmfd. Semi-fixed)	31-6097	.50
29	Resistor (70000 ohms ½ watt)	33-370339	.20
30	Resistor (330000 ohms ½ watt)	33-332339	.20
31	Compensator (1st I. F. Pri. 470 K.C.)	Part of 39	
32	1st I. F. Transformer	32-2100	1.50
33	Resistor (1000 ohms ½ watt)	33-210339	.20
34	Resistor (400 ohm Bakelite)	33-1211	.20
35	Condenser (.05 mfd. Tubular)	30-4020	.20
36	2nd I. F. Transformer	32-2102	1.50
37	Compensator (2nd I. F. Pri. 470 K.C.)	Part of 42	
38	Condenser (110 mmfd. Mica)	30-1031	.20
39	Resistor (51000 ohms ½ watt)	33-351339	.20
40	Condenser (.01 mfd. Tubular)	30-4124	.25
41	Resistor (490000 ohms ½ watt)	33-449339	.20
42	Condenser (110 mmfd. Mica)	30-1031	.20
43	Condenser (110 mmfd. Mica)	30-1031	.20
44	Resistor (1 megohm ½ watt)	33-510339	.20
45	Condenser (.015 mfd. Tubular)	30-4358	.20
46	Resistor (51000 ohms, ½ watt)	33-351339	.20
47	Condenser (.006 mfd. Tubular)	30-4112	.20
48	Condenser (.015 mfd. Tubular)	30-4226	.20
49	Volume Control	33-5158	1.00
50	Resistor (1 megohm ½ watt)	33-510339	.20
51	Voice Coil and Cone, S7 Speaker	36-3014	.80
	Voice Coil & Cone, HS Speaker	36-3627	
52	Output Transformer, S7 & HS Speaker	32-7019	.85
53	Resistor (1 megohm ½ watt)	33-510339	.20
54	Condenser (0.1 mfd. Tubular)	30-4122	.20
55	Resistor (490000 ohms ½ watt)	33-449339	.20
56	Condenser (.008 mfd. Tubular)	30-4112	.20
57	Condenser (.03 mfd. Tubular)	30-4380	.20
58	Resistor (1 megohm ½ watt)	33-510339	.20
60	Tone Control and A. C. Switch	42-1182	.75
60	Electrolytic Condenser (8 mfd.)	30-2024	1.10
61	Bias Resistor	33-3277	.20
62	Electrolytic Condenser (12 mfd.)	30-2117	1.20
63	Field Coil Assembly, S7 Speaker	36-3039	2.75
	Field Coil Assem. HS Speaker	36-3690	

Schem. No.	Description	Part No.	Price List
64	Resistor (9000 ohms, 2 watt)	33-290539	$0.20
65	Power Transformer (115 Volt 50-60 cycle)	32-7582	4.50
*	Power Transformer (115V; 25-40 cycle)	32-7584	
66	Pilot Lamp	34-2089	.15
67	Condenser (.015-.015 mfd. Double Bakelite)	3788 DQ	.40
68	Wave Switch Antenna	42-1170	1.10
69	Wave Switch R. F.	42-1171	1.60
70	Wave Switch Osc.	42-1172	1.10
	Wave Switch Indexing Plate & Shaft	42-1173	.80
	Pilot Lamp Assembly	38-7706	.35
	Dial	27-6308	.50
	Dial Hub	38-7157	.12
	Dial Clamp	38-2037	.10
	Dial Hub Set Screw	W-1641	.02
	Dial Gear	38-7185	.10
	Dial Guard	27-6324	.02
	Thrust Spring	38-6611	.01
	Thrust Washer	38-3976	Per C .20
	"C" Washer	38-3904	.01
	Drive Gear	31-1884	.25
	Vernier Drive	31-1871	.75
	Mask	27-5198	.20
	Mask Arm Assembly	31-1866	.35
	Mask Guide on Lamp Bracket Support	38-7844	.15
	Mask Washer	27-6318	Per C .50
	Dial Screen Assem.	38-7912	.20
	Spring	38-6624	Per C .50
	Lens	27-6310	.02
	Volume Control Shaft	38-6499	.10
	Volume Control Shaft Spring	38-4117	Per C .40
	Retaining Clips	38-6610	.02
	Washer	38-4186	Per C .75
	Socket 8 prong	27-6056	.11
	Socket 7 prong	27-6057	.11
	Tube Shield	38-3736	.10
	Tube Shield Base	38-3998	.03
	I. F. Shield	38-7703	.20
	Terminal Panel I. F. Unit	38-7708	.25
	Washer I. F. Unit	38-4091	Per C .25
	Wiring Panel	38-6304	.02
	Wiring Panel Power Unit	38-5864	.02
	Grommet Mtg. Tuning Condenser	27-4325	.02
	Grommet R. F. Unit	27-4317	.04
	Sleeve Mtg. R. F. Unit	38-2267	.01
	Spacer Mtg. R. F. Unit	27-6230	Per C .40
	Screw Mtg. R. F. Unit	W-720	Per C .45
	Washer Mtg. R. F. Unit	38-3927	.01
	Insulator, Mtg. Elect. Cond.	27-7194	.01
	Bracket Mtg. Elect. Cond.	6440	.05
	Antenna Panel	38-7714	.15
	Speaker Cable	L-2181	.25
	A. C. Cord	L-2183	.40
	Speaker S7—B. Cabinet	38-1009	5.75
	Speaker HS—J. Cabinet	38-1220	6.25
	Knobs Tuning	27-4330	.10
	Knobs Tuning Vernier	27-4331	.10
	Knobs Wave Switch	27-4326	.10
	Knobs Tone & Volume	27-4332	.10
	Bezel Frame & Plate Assembly	38-6620	.75
	Gasket	27-6311	.01
	Glass	27-6306	.05
	Ring	38-3967	.25
	Screw Bezel Mtg.	W-1644	Per C .50
	Nut Mtg. Volume & Tone Control	W-884	Per C 1.25
	Chassis Mtg. Screw	W-1258A	Per C 2.00
	Chassis Mtg. Washer	38-2080	Per C .30

* 25-40 cycle operation.

Figures in black type indicate circled figures in Base View.

Prices Subject to Change Without Notice

Printed in U. S. A.

PHILCO RADIO & TELEV. CORP.

MODEL 37-623
Schematic
Parts, Coils

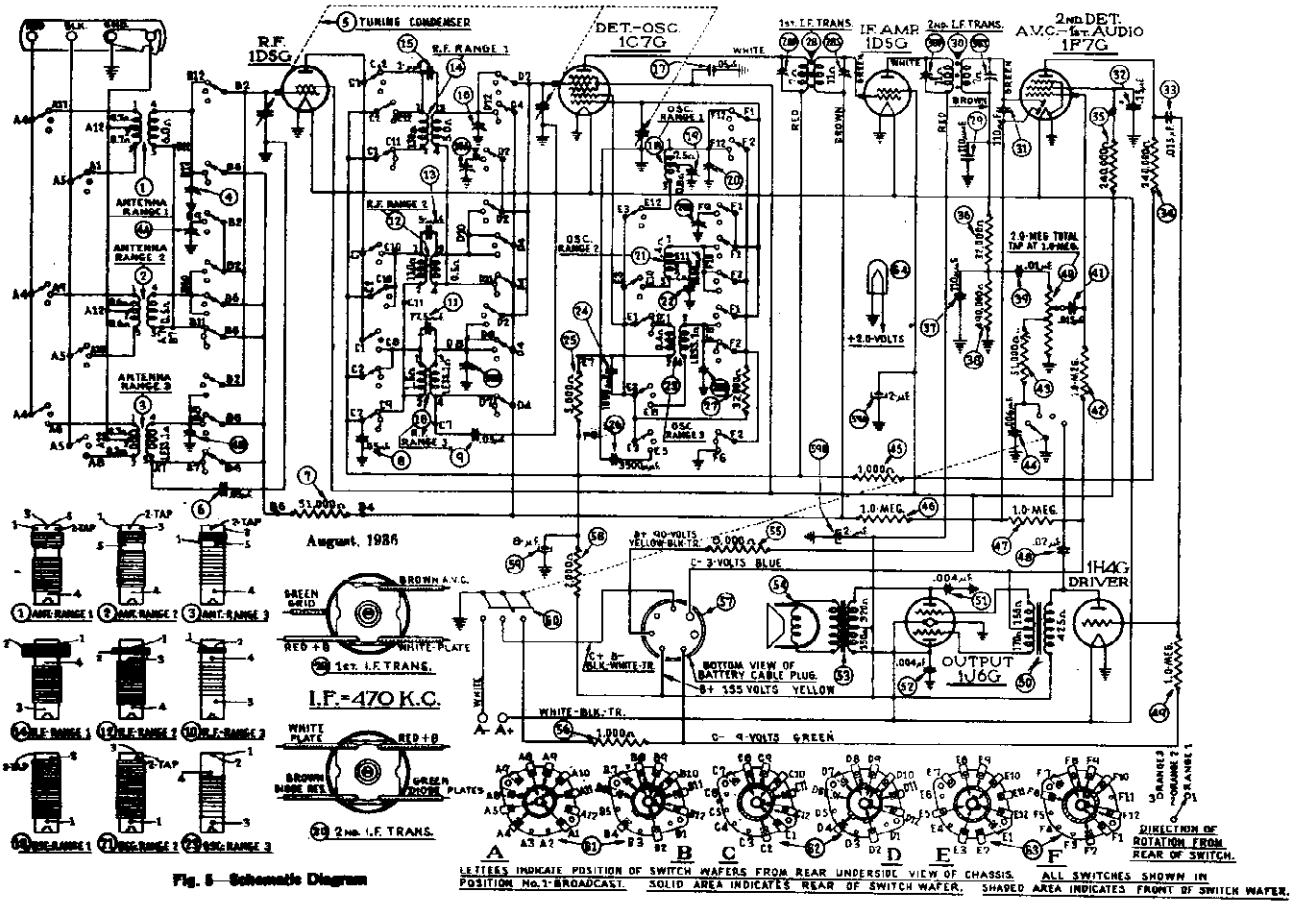

Fig. 5—Schematic Diagram

Replacement Parts—Model 37-623

Schem. No.	Description	Part No.	List Price
1	Antenna Transformer (530-1720 K.C.)	32-2106	$0.80
2	Antenna Transformer (2.3 to 7.4 M.C.)	32-2119	.85
3	Antenna Transformer (7.35 to 22 M.C.)	32-2109	.75
4	Compensator (Three Sections)	31-6002	.60
5	Tuning Condenser	31-1818	4.50
6	Condenser (.05 mfd. Tubular)	30-4020	.20
7	Resistor (51,00 ohms, ½ watt)	33-351339	.20
8	Condenser (.05 mfd. Tubular)	30-4020	.20
9	Condenser (.05 mfd. Tubular)	30-4020	.20
10	R. F. Transformer (7.35 to 22 M.C.)	32-2126	.55
11	Condenser (17.5 mmfd. Mica)	30-1079	
12	R. F. Transformer (2.3 to 7.4 M.C.)	32-2106	.6[illegible]
13	Condenser (5 mmfd. Mica)	30-1060	
14	R. F. Transformer (530-1720 K.C.)	32-2105	.75
15	Condenser (Twist wire and lug)	38-7878	
16	Compensator (Three section)	31-1621	
17	Condenser (.05 mfd. Tubular)	30-4020	.20
18	Oscillator Transformer (530-1720 K.C.)	32-2120	.55
19	Compensator (580 K.C.)	31-6006	.55
20	Compensator (Three section)	31-6002	.60
21	Oscillator Transformer (2.3 to 7.4 M.C.)	32-2121	.40
22	Condenser (1650 mmfd.)	31-6006	.40
23	Oscillator Transformer (7.35 to 22 M.C.)	32-2110	.75
24	Condenser (1,000 mmfd. Mica)	30-4453	.20
25	Resistor (5,000 ohms, ½ watt)	33-250339	.20
26	Condenser (3,500 mmfd. Semifixed)	31-6007	.50
27	Resistor (32,000 ohms, ½ watt)	33-332339	.20
28	First I. F. Transformer	32-2100	1.50
29	Condenser (110 mmfd. Mica)	30-1051	.20
30	Second I. F. Transformer	32-2102	1.50
31	Condenser (110 mmfd. Mica)	30-1051	.20
32	Condenser (.15 mfd. Bakelite)	6297/5G	.55
33	Condenser (.015 mfd. Tubular)	30-4226	.20
34	Resistor (240,000 ohms, ½ watt)	33-424239	.20
35	Resistor (240,000 ohms, ½ watt)	33-424239	.20
36	Resistor (32,000 ohms, ½ watt)	33-332239	.20
37	Condenser (110 mmfd. Mica)	30-1051	.20
38	Resistor (400,000 ohms, ½ watt)	33-440239	.20
39	Condenser (.01 mfd. Tubular)	30-4124	.25
40	Volume Control	33-5156	1.00
41	Condenser (.015 mfd. Tubular)	30-4226	.20
42	Resistor (1 megohm, ½ watt)	33-510339	.20
43	Resistor (51,000 ohms, ½ watt)	33-351239	.20
44	Condenser (.006 mfd. Tubular)	30-4125	.20
45	Resistor (1,000 ohms, ½ watt)	33-210339	0.20
46	Resistor (1 megohm, ½ watt)	33-510339	.20
47	Resistor (1 megohm, ½ watt)	33-510339	.20
48	Condenser (.02 mfd. Tubular)	30-4113	.20
49	Resistor (1 megohm, ½ watt)	33-510339	.20
50	Audio Input Transformer	32-7637	2.00
51	Condenser (.004 mfd. Tubular)	30-4456	.20
52	Condenser (.004 mfd. Tubular)	30-4456	.20
53	Output Transformer	32-7636	1.50
54	Cone and Voice Coil Assembly KR-17.	36-3640	.80
	Cone and Voice Coil Assembly HR-12.	36-3557	1.20
55	Resistor (8,000 ohm, ½ watt)	33-280339	.20
56	Resistor (1,000 ohms, ½ watt)	33-210339	.20
57	Cable Battery	41-8198	1.40
58	Resistor (2,000 ohms, ½ watt)	33-220339	.20
59	Electrolytic Condenser (2, 2, 8 mfd.)	30-2161	1.60
60	Power and Tone Control Switch	42-1207	1.20
61	Range Switch (ANT)	42-1206	1.20
62	Range Switch (R.F.)	42-1245	1.20
63	Range Switch (Osc.)	42-1246	1.20
	Pilot Lamp Assembly	38-7875	.45
	Pilot Lamp	34-2150	.22
	Vernier Drive Assembly	31-1871	.75
	Dial	27-5214	.40
	Dial Hub	28-7187	.12
	Dial Clamp	28-2837	.10
	Dial Guard	27-8324	.02
	Set Screw	W-1641	.02
	Gear (Dial)	28-7185	.10
	Thrust Spring	28-8611	.01
	Thrust Washer	28-3976	.30/C
	C Washer	28-3904	.01
	Gear (Drive)	31-1854	.25
	Mask	27-5198	.30
	Mask Arm and Assembly	31-1940	
	Shaft Coupling (Mask)	31-1941	
	Felt Washers	27-8309	
	Washer	27-8318	.50/C
	Snap Fastener	28-4279	.75/C
	Indicator Bracket and Lens Assembly	38-7912	.30
	Mask Guide and Lamp Support	38-7844	.15
	Shaft and Index Plate (Range Switch)	42-1173	.50
	Shaft (Volume Control)	38-8069	
	Retaining Clip (Vol. Shaft)	28-4304	.01
	Spring (Vol. Shaft)	28-4117	$0.40/C
	Socket (8 prong)	27-6068	.11
	Socket (7 prong)	27-6067	.11
	Shield Tube	28-2726	.10
	Base Tube Shield	28-2806	.03
	Grommet Mtg. R. F. Unit	27-4317	.04
	Sleeve Mtg. R. F. Unit	28-2257	.01
	Screw Mtg. R. F. Unit	W-729	.45/C
	Washer Mtg. R. F. Unit	28-3927	.01
	Washer Mtg. R. F. Unit	27-8339	.40/C
	Rubber Mtg. Tuning Condenser	27-4326	.02
	Mtg. Plate (Trans.)	28-3806	.02
	Mtg. Spacer (Trans.)	27-8228	.01
	Mtg. Screw (Trans.)	W-1635	.30/C
	Terminal Panel I. F. Unit	38-7703	.25
	Cable Speaker	41-8207	.30
	Mtg. Bolt (Chassis)	W-1405	1.50/C
	Mtg. Rubbers	5139	.03
	Mtg. Bushing	27-4360	
	Knob	27-4330	.10
	Knob	27-4331	.10
	Knob	27-4326	.10
	Knob	27-4332	.10
	"B" Battery	41-8007	
	"A" Battery (Wet)	172R	
	"A" Battery (Dry)	41-8011	
	Ballast Lamp	1FI	
	Bezel Plate and Frame	40-5939	.75
	Gasket	27-8311	.01
	Glass	27-8296	.05
	Ring	28-3967	.35
	Screws	W-1644	.50/C

S CABINET

Baffle and Silk Assembly	40-5870	
Speaker—KR17	36-1248	10.00

J CABINET

Speaker—HR12	36-1250	11.00
Baffle and Silk Assembly	40-5971	.00
Speaker	36-1250	11.00
Speaker Ring	27-8016	
Speaker Bolts	W-1693	

Figures in black type indicate circled figures in Base View.

Prices Subject to Change without Notice

©John F. Rider, Publisher

Electrical Specifications

Type of Circuit: Superheterodyne; battery operated; with class "B" output, the Philco Automatic Aerial Tuning System and built in connections for the Philco High Efficiency Aerial.

Batteries Required: "A"—Philco 172-R two volt storage battery or a dry "A" battery **Philco Part No. 41-8011.** If a dry "A" battery is used, a ballast lamp PHILCO type 1F1 must be inserted in the socket provided in the dry "A" battery. This lamp acts as a voltage regulator, and maintains a constant potential of two volts on the filaments of the receiver tubes.

"BC" Philco battery Part No. 41-8007 is used to supply B and C voltage. This battery contains a socket into which the receiver battery cable plug is inserted.

Current Drain: A Battery, 720 M.A.; B Battery, 21 M.A.

Philco Tubes Used: R. F. Amp. 1D5G, Det.—Osc. 1C7G I. F. Amp. 1D5G, 2nd Det. A. V. C.; 1st audio; 1F7G, Driver 1H4G, Output 1J6G.

Frequency Ranges: Range 1—530 to 1720 K. C.; Range 2—2.3 to 7.4 M. C.; Range 3—7.35 to 22 M. C.

Intermediate Frequency: 470 K. C.

Speakers: KR-17-"B" Cabinet HR-12-"J" Cabinet

Alignment of the Compensators

To accurately adjust this receiver, precision test equipment is necessary. A signal generator such as the **Philco Model 088** Signal Generator, covering from 110 to 20,000 K. C. is recommended for use in adjusting the compensators at the various frequencies specified. A visual indication of the receiver output is also necessary to obtain correct adjustment of the compensators. **Philco Model 025** Circuit Tester contains a sensitive output meter and is recommended for these adjustments.

Philco Fibre Handle Screw-Driver No. 27-7059 and Variable Condenser Part No. 45-2325 complete the necessary equipment for these adjustments. The locations of the various compensators are shown in Figs. 2 and 3.

The following procedure must be observed in adjusting the compensators:—

DIAL ADJUSTMENT—The tuning condenser is set at the maximum capacity position, by turning the tuning knob counter-clockwise. Loosen the set screw of dial hub and set dial, with Glowing Indicator centered between the first and second index lines at the low frequency end of the broadcast scale.

OUTPUT METER—The 025 Output Meter is connected between one of the plate prongs of the 1J6G tube and the chassis. Then adjust the meter to use the (0-30) volt scale.

INTERMEDIATE FREQUENCY CIRCUIT

Frequency 470 K. C.

1. Connect the 088 Signal Generator output lead, through a .1 mfd. condenser to the control grid of the 1C7G tube, and the ground connection of the output lead to the chassis.
2. Set the range switch in position No. 1 (Broadcast). Rotate the tuning condenser of the receiver to approximately 580 K. C. Then adjust the signal generator for 470 K. C.
3. Adjust compensators (30S), (30P), (28S), and (28P) for maximum output, see Fig. 2.

RADIO FREQUENCY CIRCUIT

Tuning Range (7.35 to 22 M. C.)

1. Remove the signal generator output lead from the grid of the 1C7G, and connect it through the .1 mfd. condenser to terminal No. 1 on the aerial input panel. Connect the generator ground lead to terminal No. 3. Terminals 2 and 3 of the aerial input panel must be shorted with the connector link provided on the panel during the following adjustments.
2. Set the range switch in position No. 3 (extreme clockwise). Turn the signal generator and receiver dials to 20 M. C.
3. Now adjust compensator (20B) by turning the screw (clockwise) to the maximum capacity position, then slowly turn it counter-clockwise until a second maximum peak is reached on the output meter. The first peak from maximum capacity is the image signal and the receiver must not be adjusted to it. **NOTE:** In adjusting some receivers only one peak will be observed, therefore tune the compensator to maximum on this peak. If the above procedure is correctly performed, the image signal will be found at 19.060 M. C., by advancing the signal generator input, and turning the receiver dial to this frequency mark on the scale.
4. Leaving the signal generator and receiver dials at 20 M. C. the antenna and R. F. compensators (4B) and (16B) are now adjusted, by connecting a variable condenser (Philco Part No. 45-2325) across the oscillator compensator (20B) contact (first contact from the left side of the receiver facing rear underside view of the chassis) and ground. Now tune the added condenser until the second harmonic of the receiver oscillator beats against the signal from the generator, resulting in a maximum indication on the output meter. **NOTE:** It may be necessary to increase the signal generator output to obtain a signal of sufficient strength for reading on the output meter. Compensators (4B) and (16B) are now adjusted for maximum output. After these adjustments, remove the external condenser and readjust compensator (20B) as given in paragraph 3 above.

Tuning Range 2.3 to 7.4 M. C.

1. Turn the range switch to position No. 2 (middle range). Rotate the signal generator and receiver dials to 7.0 M. C. Then adjust compensator (20A) for maximum output.
2. Now turn the signal generator and receiver dials to 6 M. C. and adjust compensators (4A) Ant., and (16A) R. F. for maximum output.

Tuning Range 530 to 1720 K. C.

1. Turn the range switch to position No. 1 (Broadcast). Set the 088 signal generator indicator and the receiver dial to 1600 K. C.

Now adjust compensators (20) osc., (4) ant. and (16) R. F. for maximum output.

2. The low frequency end of this range is now adjusted as follows: Turn the signal generator and receiver dials to 580 K. C. Now tune compensator (19) for maximum output, then vary the tuning condenser of the receiver for maximum output about the 580 K. C. dial mark. Turn compensator (19) slightly to the right or left and vary the receiver turning condenser for maximum output. If the output reading increases, turn compensator (19) in the same direction a trifle more and again vary the tuning condenser for maximum output. This procedure of first setting the compensator, and then varying the tuning condenser, is continued until there is no further gain in the output reading. When a decrease in output is noted turn the compensator in the opposite direction.
3. Set the signal generator and receiver dials as given in Paragraph 1 above and adjust compensator (20) for maximum output.
4. Now turn the signal generator and receiver dials to 1500 K. C. and adjust compensators (4) ant. and (16) R. F. for maximum output.

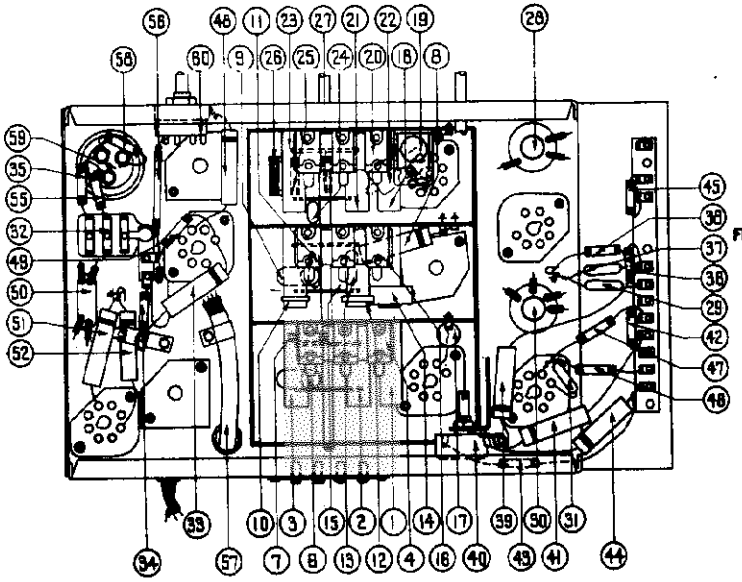

Fig. 4—Parts Location, Under Side of Chassis

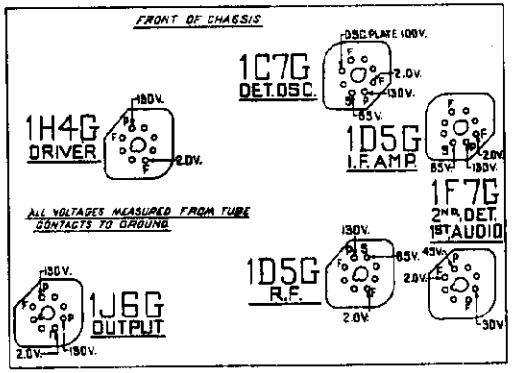

Fig. 1—Socket Voltages Underside of Chassis View

The voltages indicated by arrows were measured with a Philco 025 Circuit Tester which contains a voltmeter having a resistance of 1000 ohms per volt. Volume Control at minimum, range switch in broadcast position.

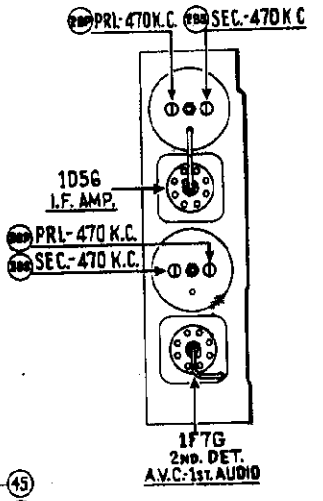

Fig. 2—I. F. Compensators, Top of Chassis

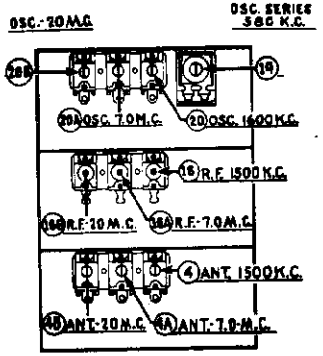

Fig. 3—R. F. Compensators, Under Side of Chassis

©John F. Rider, Publisher

MODEL 37-630
Schematic, Coils
Change

PHILCO RADIO & TELEV. CORP.

Run 2.

While the circuit arrangement remains the same, the locations of the parts are slightly changed in this Run. Bakelite condenser ㊷ Part No. 3793-DG is removed from front and placed in the rear of the chassis. Tubular condenser ㊸ Part No. 30-4380 is replaced with a Part No. 8318-SU bakelite condenser placed in the position formerly held by 3793-DG.

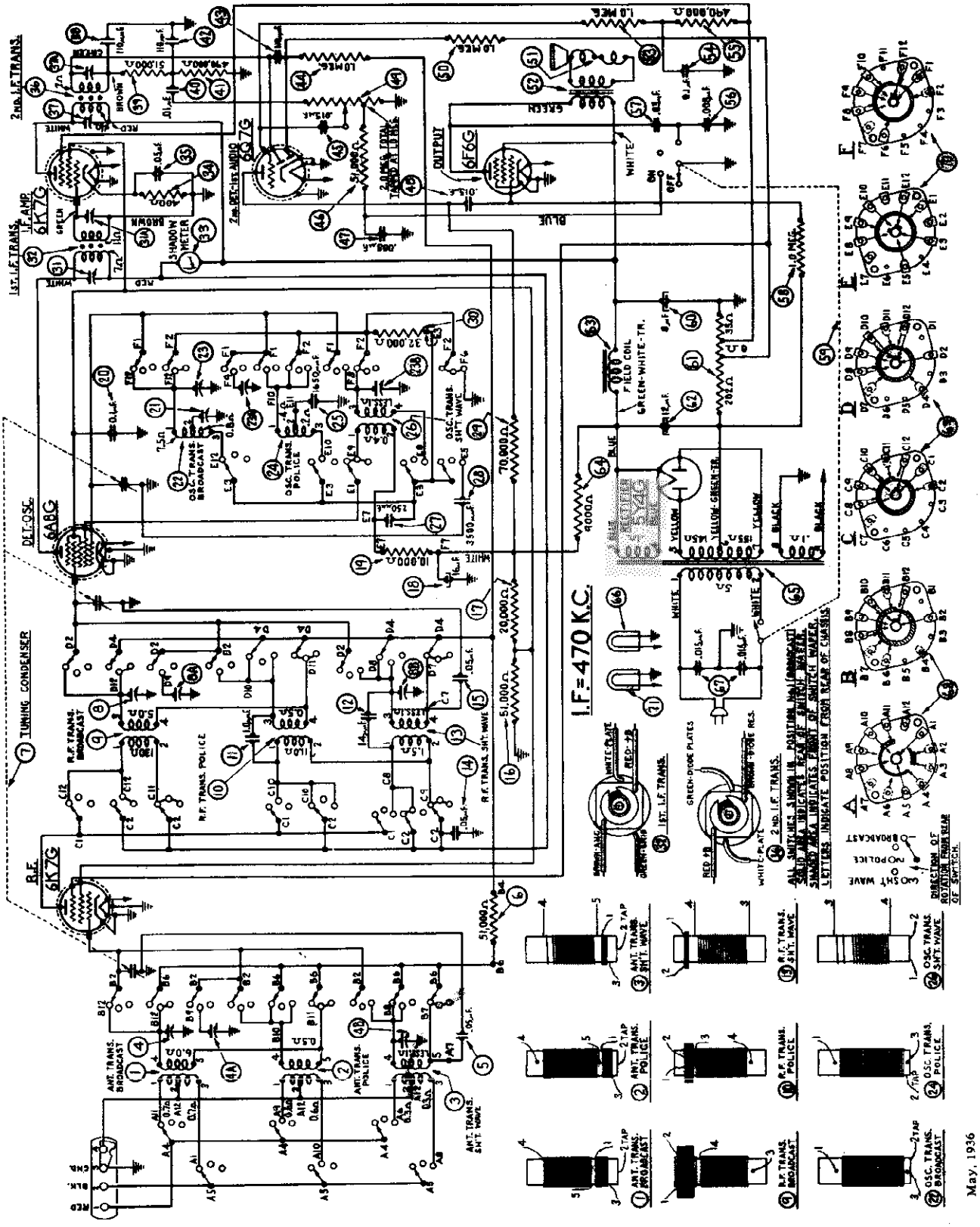

May, 1936

©John F. Rider, Publisher

MODEL 37-630
Trimmers
Alignment

PHILCO RADIO & TELEV. CORP.

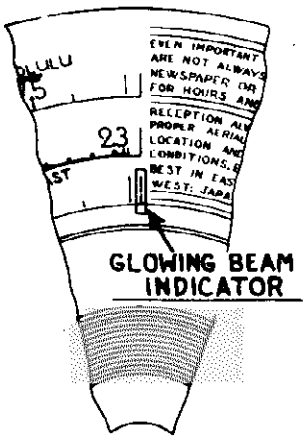

Fig. 2 Dial Calibration

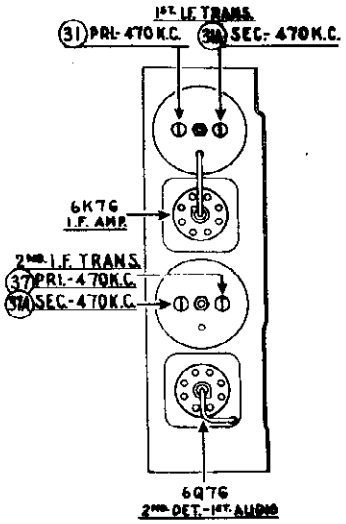

Fig. 3—Locations of I. F. Compensators

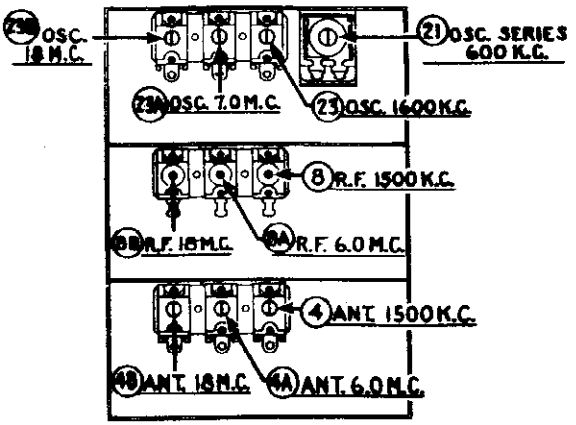

Fig. 4—Locations of R. F. Compensators

Alignment of the Compensators

The accurate adjustment of the various compensating condensers is vital to the proper functioning of this receiver. There are four compensating condensers in the I. F. Circuit, four in the Oscillator Circuit, three in the R. F. Amplifier Circuit and three in the Antenna Circuit. Incorrect adjustment will cause loss of sensitivity, unsatisfactory tone, and poor selectivity.

To accurately adjust this receiver, precision test equipment is necessary. A signal generator such as the PHILCO MODEL 088 SIGNAL GENERATOR, covering from 110 to 20,000 K. C. is recommended for adjusting the compensators at the various frequencies specified. A visual indication of the receiver output is also necessary to obtain correct adjustment of the compensators. PHILCO MODEL 025 CIRCUIT TESTER contains a sensitive output meter and is recommended for these adjustments.

Philco Fibre Handle Screw-driver No. 27-7059 completes the necessary equipment for these adjustments. The locations of the various compensators are shown in Figs. 3 and 4.

The following procedure must be observed in adjusting the compensators:—

Dial Calibration—In order to adjust this receiver correctly, the dial must be aligned to track properly with the tuning condenser. To do this, rotate the tuning condenser control to the extreme counter-clockwise position (maximum capacity). Loosen the screw of dial hub, then turn dial until the glowing indicator is centered on the first index line of dial scale (see Fig. 2). Now tighten the dial hub set screw in this position.

Shadow Meter Adjustment—Remove aerial and allow tubes to warm up. Then adjust shadow meter as follows:

1 Move the Shadow meter coil backwards and forwards, until the shadow is within one eighth of an inch of each side of the screen.
2 Remove the Rectifier tube from its socket, and rotate the shadow meter coil for minimum shadow width.
3 Replace the Rectifier tube. The shadow should then return to maximum width or within one-eighth of an inch of each side of the screen. If the shadow does not return to maximum width, operations 1 and 2 should be continued until it does.

Output Meter—The 025 Output Meter is connected to the plate and cathode terminals of the (6F6G) tube. Adjust the meter to use the (0-30) Volt Scale.

During the I. F. and R. F. adjustments, the signal generator output should be maintained at the lowest possible level that will give an indication on the output meter.

INTERMEDIATE FREQUENCY CIRCUIT

Frequency 470 K. C.

1 Connect the 088 Signal Generator output lead, through a .1 mfd. condenser, to the control grid of the 6A8G tube; and the ground connection of the output lead to the chassis.
2 Set the range switch in position No. 1 (Broadcast), then rotate the tuning condenser of the receiver to the maximum capacity position (counter-clockwise), and adjust the signal generator for 470 K. C.
3 Adjust compensators (37)a 2nd I. F. Sec., (37) 2nd I. F. Pri., (32)a 1st I. F. Sec., and (31) 1st I. F. Pri. for maximum reading on output meter.

RADIO FREQUENCY CIRCUIT

Tuning Range—7.3 to 22.0 M. C.

1 Remove the signal generator output lead from the grid of 6A8G tube, and connect it through a .1 mfd. condenser to terminal No. 1 on aerial input panel, and the generator ground lead to terminal No. 3, rear of chassis.
(a) Terminals 2 and 3 of aerial input panel must be connected with connector link provided on the panel, during these adjustments.
2 Set the tuning range switch in position No. 3 (Short Wave). Turn the signal generator and receiver dials to 18 M. C. and adjust compensators (23)b Osc., (8)b R. F. and (4)b Ant. for maximum output. (See Note (a) below).
(a) The adjustment of the Radio Frequency compensator on the high frequency range causes a slight detuning of the oscillator circuit. In order to overcome this detuning effect, connect a variable condenser of approximately 350 mmfd., having a good vernier drive, across the oscillator section of the tuning condenser. Leaving the signal generator and receiver dials at 18 M. C., tune the added condenser so that the second harmonic of the receiver oscillator will beat against the signal from the 088 signal generator bringing in the signal. The antenna and R. F. compensators (4)b and (8)b should then be adjusted to give maximum output. Now remove the external condenser and turn compensator (23)b to maximum capacity (clockwise) then without moving signal generator or receiver tuning condenser, back off compensator (23)b (counter-clockwise) until a second peak is reached on the output meter. The first peak is caused by tuning to the image frequency signal and must not be used.

Tuning Range 2.3 to 7.4 M. C.

1 Turn the range switch to position No. 2 (police). Rotate the signal generator and receiver dials to 7.0 M. C. Then adjust compensator (23)a for maximum output. Now turn the signal generator and receiver dials to 6.0 M. C. and adjust compensators (8)a R. F. and (4)a Ant. for maximum reading on the output meter.

Tuning Range 530 to 1720 K. C.

1 Set the range switch in position No. 1 (Broadcast). Set the 088 Signal Generator indicator at 800 K. C. and the receiver dial at 1600 K. C.
(a) In adjusting the receiver at 1600 K. C. the second harmonic of 800 K. C., to which the signal generator is tuned, is used. The second harmonic of 800 K. C. is 1600 K. C. Now adjust compensators (23) Osc., (8) R. F. and (4) Ant. for maximum reading on output meter.
2 The low frequency end of the range is now tuned by turning the signal generator and receiver dials to 600 K. C. and adjusting compensator (21) Osc. Series—(see Note (a) below)—for maximum reading on output meter.
(a) While compensator (21) is being adjusted, the tuning condenser must be rolled for maximum output. This is accomplished as follows:—First tune compensator (21) for maximum output. Then vary the tuning condenser for maximum output at 600 K. C. Now retune compensator (21), and again vary the tuning condenser back and forth at 600 K. C. for maximum output. This operation of first turning the compensator then the tuning condenser is continued until maximum output is obtained at the 600 K. C. frequency.
3 After the low frequency (600 K. C.) end of the range is adjusted, the 1600 K. C. end is readjusted, as given in Paragraph (1) above, to correct any variation that the low frequency series compensator may have caused in the alignment of the high frequency end.
4 Now turn the signal generator and receiver dials to 1500 K. C. and readjust compensators (4) Ant., and (8) R. F., for maximum output.

MODEL 37-630
Circuit Data
Voltage, Socket
Transformer Data

PHILCO RADIO & TELEV. CORP.

Electrical Specifications

Voltage Rating: 115 Volts A.C.

Frequency Rating: 50 to 60 cycles.
For 25 to 40 cycle operation the Power Transformer marked with asterisk in parts list is used.

Power Consumption: 65 Watts.

Types and Number of Tubes: 2 type 6K7G, R. F. and I. F. Amplifiers; 1 type 6A8G, Detector-Oscillator; 1 type 6Q7G, 2nd Detector, Automatic Volume Control and 1st Audio; 1 type 6F6G, Output; and 1 type 5Y4G Rectifier.

Undistorted Output: 3 watts.

Intermediate Frequency: 470 K. C.

Tuning Ranges: Three. Range 1.—530 to 1720 Kilocycles; Range 2.—2.3 to 7.4 Megacycles; Range 3.—7.35 to 22 Megacycles.

Speakers: X Cabinet—H24
T Cabinet—K38

General Description

Model 37-630 is a 6 tube superheterodyne receiver for operation on alternating current, having three tuning ranges, covering standard broadcast and short-wave frequencies, and using the new Philco High-Efficiency self-centering glass tubes.

The circuit includes the Philco "Foreign Tuning System" controlled by the tuning range switch which provides maximum sensitivity and noise reduction, when used with the **Philco High Efficiency Aerial** supplied with the receiver. One stage of Radio Frequency amplification which greatly increases the signal to noise ratio, automatic bass compensation in the volume control circuit, shadow tuning and a separate diode circuit for automatic volume control are also incorporated in this receiver.

The red and black leads of the High-Efficiency Aerial "transmission line" are connected to terminals 1 and 2 respectively, of the terminal panel provided at the rear of the chassis. Connect the jumper on the terminal panel across terminals 3 and 4.

If a temporary aerial is used, the jumper should be across terminals 2 and 3. The aerial connects to terminal 1 and the ground to terminal 3.

A good ground connection is desirable in all installations. Make the ground connection from the nearest water or radiator pipe to terminal 3 on the terminal panel.

The chassis is constructed in three basic assembly units, concentrating each circuit in a single unit.

The Radio Frequency unit, located in the center of the chassis, contains a 6K7G tube which functions as a Radio Frequency Amplifier; a 6A8G tube, for the Detector-Oscillator circuit; individual Antenna, R. F. Amplifier and Oscillator coils for each tuning range; selector switch; compensating condensers for all coils; and other parts necessary for the associated circuits. The unit is separately mounted on rubber grommets, cushioning it from the main chassis.

The Intermediate Frequency unit, mounted on the right hand side of the chassis (facing front of set) consists of the Intermediate Frequency transformers, compensating condensers, a 6K7G for the I. F. Amplifier stage, and a 6Q7G tube as the second detector —automatic volume control and first audio stage. All voltages supplied to the I. F. and R. F. units are furnished from a terminal strip mounted in this unit.

The Power Pack and Audio Output circuits, together with the required voltage dividers and filter condensers are mounted in the power unit. This unit contains a 6F6G tube and a 5Y4G tube for the Power Output and Rectifier Circuits respectively, and the combined tone control and power switch.

Schematic Diagram, Fig. 5, is numbered, indicating all important parts. These numbers correspond with the parts layout shown in Fig. 6. In addition, the range switch wafers are shown on the schematic diagram. The contacts on each wafer are numbered and lettered to indicate their connection points in the schematic diagram, which are also lettered and numbered. The physical drawings of each coil used in the receiver are also shown on schematic diagram Fig. 5. The connections of these coils are numbered on the coil drawing and on the schematic diagram.

Fig. 1 shows the Voltage measurements taken from the bottom of the socket at each contact. In Fig. 2, the correct position of the dial indicator, for proper adjustment of the compensator condenser is shown. Fig. 3 and 4 are the locations of the I. F. and R. F. compensators respectively.

This receiver is used in cabinets type X code 121 and type T code 122. These instructions, however, will cover both types.

POWER TRANSFORMER DATA

Lead No. Shown on Schematic	A.C. Volts	Current	Circuit	Color	Resistance
1-2	120	—	Pri.	White	5 ohms
3-4	5.0	2.0 A.	Fil. Rectifier	Blue	.1 ohm
5-7	670	70 Ma.	High Voltage Sec.	Yellow	145 ohms 155 ohms
6	—	—	Center Tap of 5-7	—	—
8-9	6.7	2.1 A.	Fil.	Black	.1 ohm

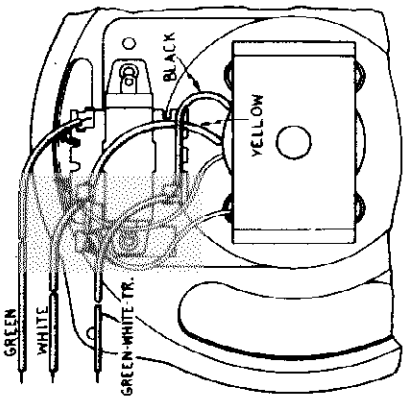

Speaker Wiring

When replacing any part of the speaker, the hum bucking coil connections should be connected for minimum hum.

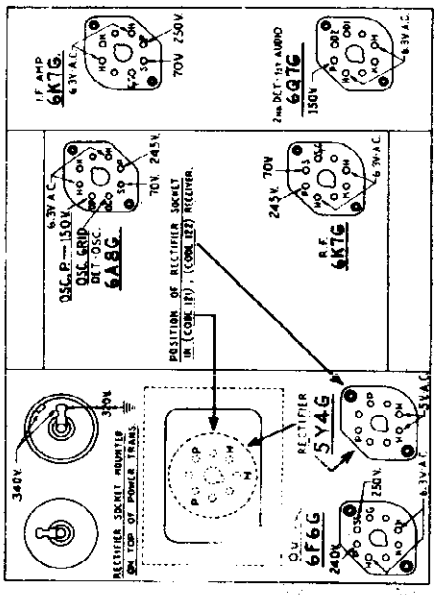

Fig. 1. Socket Voltages
Measured from Socket Contact to Ground
Underside of Chassis View

The voltages indicated by arrows were measured with a Philco 925 Circuit Tester which contains a voltmeter having a resistance of 1000 ohms per volt. Volume Control at minimum. Range Switch in broadcast position. Line voltage 115 A.C.

©John F. Rider, Publisher

MODEL 37-630
Chassis
Parts List

PHILCO RADIO & TELEV. CORP.

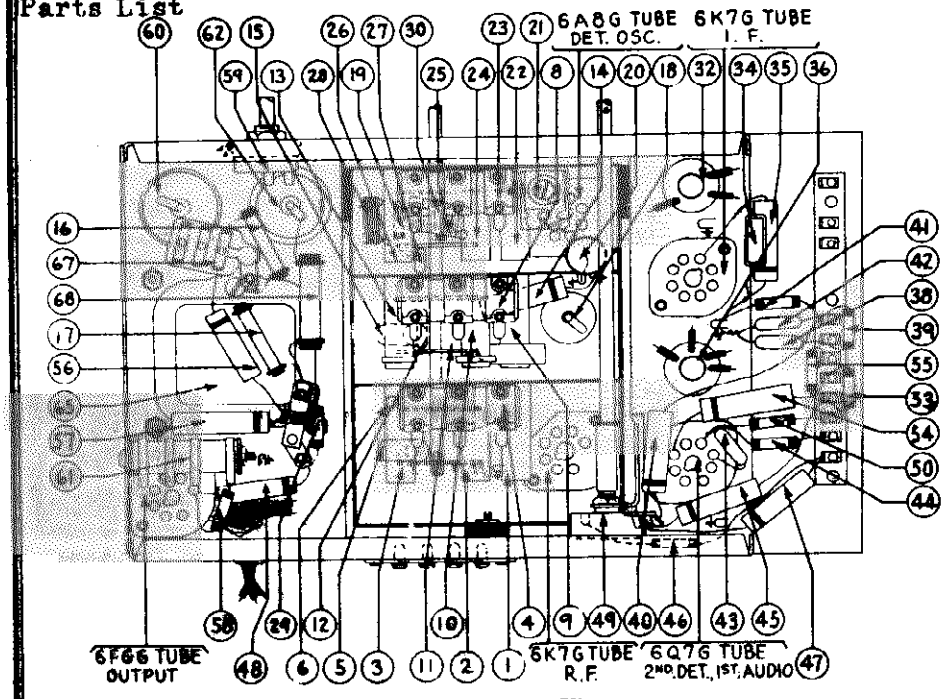

Retaining Clips	28-8610	.03
Washer	28-4186	.75
Socket 8 prong	27-6088	.11
Socket 7 prong	27-6087	.11
Tube Shield	28-2736	.10
Tube Shield Base	28-3808	.08
I. F. Shield	38-7703	.20
Terminal Panel I. F. Unit	38-7703	.24
Washer I. F. Unit	28-4001	Per C
Wave Switch Indexing Plate & Shaft	42-1173	.25
Pilot Lamp Assembly	28-7706	.50
Dial	27-8208	.25
Dial Hub	28-7187	.13
Dial Clamp	28-2837	.10
Dial Hub Set Screw	W-1641	.02
Dial Gear	28-7185	.10
Dial Guard	27-8324	.08
Thrust Spring	28-8611	.01
Thrust Washer	28-3876	Per C .30

Fig. 6—Base View

Schematic No.	Description	Part No.	List Price
1	Antenna Transformer (Broadcast)	32-2106	$0.80
2	Antenna Transformer (Police)	32-2119	.65
3	Antenna Transformer (S. W.)	32-2109	.75
4	Compensator Ant. 1500 K. C.	31-6092	.60
5	Condenser (.05 mfd. Tubular)	30-4020	.20
6	Resistor (51000 ohms ½ watt)	33-351339	.20
7	Tuning Condenser	31-1818	4.50
8	Compensator (R. F. 1500 K.C.)	31-6092	.60
9	R. F. Transformer (Broadcast)	32-2106	.75
10	R. F. Transformer (Police)	32-2106	.65
11	Condenser (1.0 mmfd.)		
12	Condenser (14 mmfd. Mica)	30-1073	.20
13	R. F. Transformer (S. W.)	32-2126	.55
14	Condenser (.05 mfd. Tubular)	30-4123	.20
15	Condenser (.05 mfd. Tubular)	30-4020	.20
16	Resistor (51000 ohms 1 watt)	33-351439	.20
17	Resistor (20000 ohms 1 watt)	33-320439	.20
18	Electrolytic Condenser (16 mfd.)	30-2118	1.65
19	Resistor (10000 ohms ½ watt)	33-310339	.20
20	Condenser (.1 mfd. Tubular)	30-4170	.25
21	Compensator (Osc. 600 K.C.)	31-6056	.55
22	Osc. Transformer (Broadcast)	32-2120	.65
23	Compensator (Osc. 1600 K.C.)	31-6092	.60
24	Osc. Transformer (Police)	32-2121	.40
25	Condenser (1550 mmfd. Semi-fixed)	31-6096	.40
26	Osc. Transformer (S.W.)	32-2110	.75
27	Condenser (250 mmfd. Mica)	30-1062	.25
28	Condenser (3500 mmfd. Semi-fixed)	31-6097	.50
29	Resistor (70000 ohms ½ watt)	33-370339	.20
30	Resistor (32000 ohms ½ watt)	33-332339	.20
31	Compensator (1st I. F. Pri. 470 K.C.)	Part of 39	
32	1st I. F. Transformer	32-2100	1.50
33	Shadowmeter	45-2189	2.50
34	Resistor (400 ohms Bakelite)	33-1211	.20
35	Condenser (.05 mfd. Tubular)	30-4020	.20
36	2nd I. F. Transformer	32-2102	1.50
37	Compensator (2nd I. F. Pri. 470 K.C.)	Part of 42	
38	Condenser (110 mmfd. Mica)	30-1031	.20
39	Resistor (51000 ohms ½ watt)	33-351339	.20
40	Condenser (.01 mfd. Tubular)	30-4124	.25
41	Resistor (490000 ohms ½ watt)	33-449339	.20
42	Condenser (110 mmfd. Mica)	30-1031	.20
43	Condenser (110 mmfd. Mica)	30-1031	.20
44	Resistor (1 megohm ½ watt)	33-510339	.20
45	Condenser (.015 mfd. Tubular)	30-4358	.20
46	Resistor (51000 ohms, ½ watt)	33-351339	.20
47	Condenser (.006 mfd. Tubular)	30-4112	.20
48	Condenser (.015 mfd. Tubular)	30-4226	.20
49	Volume Control	35-5156	1.00
50	Resistor (1 megohm ½ watt)	33-510339	.20
51	Voice Coil and Cone, H24 Speaker	02625	1.20
	Voice Coil and Cone, K38 Speaker	36-3174	.80
52	Output Transformer, H24	2580	1.00
	Output Transformer, K38	2580	1.60
53	Resistor (1 megohm ½ watt)	33-510339	.20
54	Condenser (0.1 mfd. Tubular)	30-4122	.20
55	Resistor (490000 ohms ½ watt)	33-449339	.20
56	Condenser (.006 mfd. Tubular)	30-4112	.20
57	Condenser (.03 mfd. Tubular)	30-4380	.20

Schematic No.	Description	Part No.	List Price
58	Resistor (1 megohm ½ watt)	33-510339	.20
59	Tone Control and A. C. Switch	42-1182	.75
60	Electrolytic Condenser (8 mfd.)	30-2024	1.10
61	Bias Resistor	33-3277	.20
62	Electrolytic Condenser (12 mfd.)	30-2117	1.20
63	Field Coil Assembly, H24 Speaker	36-3565	
	Field Coil Assembly, K38 Speaker	36-3718-01	
64	Resistor (9000 ohms, 2 watt)	33-290539	.30
65	Power Transformer (115 Volt 50-60 cycle) Code 121	32-7583	4.50
	Power Transformer (115 Volt 25-40 cycle) Code 121	32-7584	6.50
	Power Transformer (115 Volt 50-60 cycle) Code 122	32-7626	4.25
	Power Transformer (115 Volt 50-60 cycle) Code 122	32-7627	
66	Pilot Lamp	34-2039	$0.15
67	Condenser (.015-.015 mfd. Double Bakelite)	3793 DG	.40
68	Wave Switch Antenna	42-1170	1.10
69	Wave Switch R. F.	42-1171	1.00
70	Wave Switch Osc.	42-1172	1.10
	Drive Gear	31-1884	.25
	Vernier Drive	31-1871	.75
	Lens	27-8310	.02
	Volume Control Shaft	28-6499	.10
	Volume Control Shaft Spring	28-4117 Per C	.40
	Wiring Panel	38-6306	.03
	Wiring Panel Power Unit	38-5864	.02
	Grommet Mtg. Tuning Condenser	27-4325	.02
	Grommet R. F. Unit	27-4317	.04
	Sleeve Mtg. R. F. Unit	28-2357	.01
	Spacer Mtg. R. F. Unit	27-8339 Per C	.40
	Screw Mtg. R. F. Unit	W-729 Per C	.45
	Washer Mtg. R. F. Unit	28-3927	.01
	Insulator Mtg. Electrolytic Condenser	27-7194	.01
	Bracket Mtg. Electrolytic Condenser	6440	.05
	Antenna Panel	38-7714	.15
	Speaker Cable	L-2181	.25
	A. C. Cord	L-2183	.40
	Knobs Tuning	27-4330	.10
	Knobs Tuning Vernier	27-4331	.10
	Knobs Wave Switch	27-4326	.10
	Knobs Tone & Volume	27-4332	.10
	Shadowmeter Lamp Shield	28-2917	.02
	Shadowmeter Mtg. Spring	28-8623	

MODEL T CABINET

Bezel Frame & Plate Assembly	40-5937	
Bezel Frame Gasket	27-8311	
Bezel Frame Rubber	5196	.01
Bezel Frame Glass	27-8288	.06
Bezel Frame Ring	28-3987	.35
Speaker K-38	36-1262	
Baffle & Silk Assembly	40-5973	

MODEL X CABINET

Bezel Frame & Plate Assembly	40-5945
Bezel Frame Gasket	27-8312
Bezel Frame Glass	27-8289
Bezel Frame Ring	28-3987
Speaker H-24	36-1234
Baffle and Silk Assembly	40-5972

Figures in black type indicate circled figures in Base View.

May, 1936

©John F. Rider, Publisher

PHILCO RADIO & TELEV. CORP.

MODEL 376
MODEL 37-640
Schematic
Coil Data

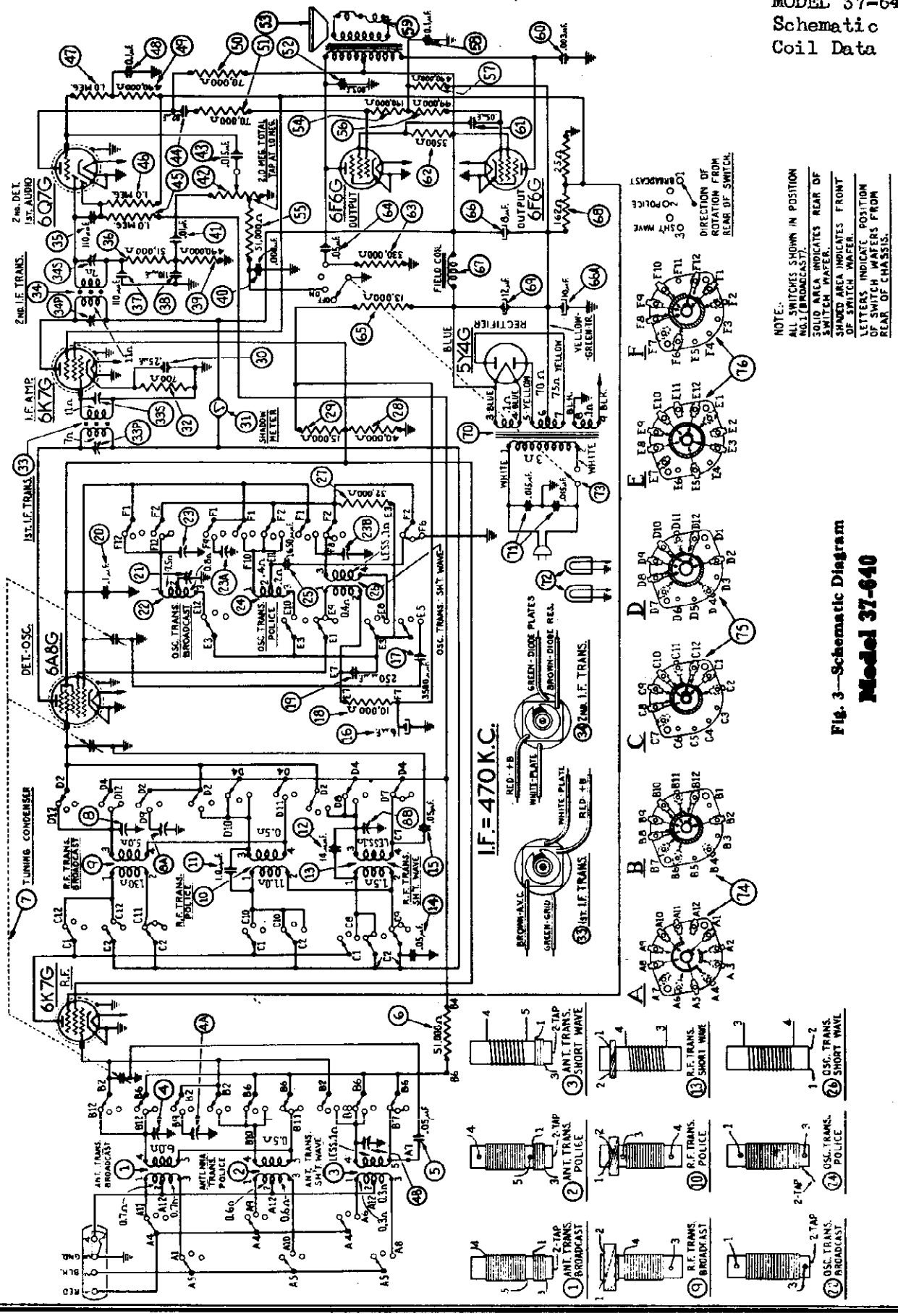

Fig. 3—Schematic Diagram

Model 37-640

©John F. Rider, Publisher

MODEL 37-640

PHILCO RADIO & TELEV. CORP.

Trimmers
Alignment

Alignment of Compensators

The accurate adjustment of the various compensating condensers is vital to the proper functioning of this receiver. There are four compensating condensers in the I. F. Circuit, four in the Oscillator Circuit, three in the R. F. Amplifier Circuit and three in the Antenna Circuit. Incorrect adjustment will cause loss of sensitivity, unsatisfactory tone, and poor selectivity.

To accurately adjust this receiver, precision test equipment is necessary. A signal generator such as the PHILCO MODEL 088 SIGNAL GENERATOR, covering from 110 to 20,000 K. C. is recommended for adjusting the compensators at the various frequencies specified. A visual indication of the receiver output is also necessary to obtain correct adjustment of the compensators. PHILCO MODEL 025 CIRCUIT TESTER contains a sensitive output meter and is recommended for these adjustments.

Philco Fibre Handle Screw-driver No. 27-7059 completes the necessary equipment for these adjustments. The locations of the various compensators are shown in Figs. 6 and 7.

The following procedure must be observed in adjusting the compensators:

DIAL CALIBRATION—In order to adjust this receiver correctly, the dial must be aligned to track properly with the tuning condenser. To do this, rotate the tuning condenser control to the extreme counter-clockwise position (maximum capacity). Loosen the screw of dial hub, then turn dial until the glowing indicator is centered on the first index line of dial scale (see Fig. 5). Now tighten the dial hub set screw in this position.

SHADOW METER ADJUSTMENT—Remove aerial and allow tubes to warm up. Then adjust shadow meter as follows:

1—Move the Shadow meter coil backwards and forwards, until the shadow is within one-eighth of an inch of each side of the screen.

2—Remove the Rectifier tube from its socket, and rotate the shadow meter coil for minimum shadow width.

3—Replace the Rectifier tube. The shadow should then return to maximum width or within one-eighth of an inch of each side of the screen. If the shadow does not return to maximum width, operations 1 and 2 should be continued until it does.

OUTPUT METER—The 025 Output Meter is connected to the plate and cathode terminals of one (6F6G) tube. Adjust the meter to use the (0-30) Volt Scale.

During the I. F. and R. F. adjustments, the signal generator output should be maintained at the lowest possible level that will give an indication on the output meter.

INTERMEDIATE FREQUENCY CIRCUIT

Frequency 470 K. C.

1—Connect the 088 Signal Generator output lead, through a .1 mfd. condenser, to the control grid of the 6A8G tube; and the ground connection of the output lead to the chassis.

2—Set the range switch in position No. 1 (Broadcast), then rotate the tuning condenser of the receiver to the maximum capacity position (counter-clockwise), and adjust the signal generator for 470 K. C.

3—Adjust compensators 33s 2nd I. F. Sec., 33p 2nd I. F. Pri., 34s 1st I. F. Sec., and 34p 1st I. F. Pri. for maximum reading on output meter.

RADIO FREQUENCY CIRCUIT

Tuning Range—7.3 to 22.0 M. C.

1—Remove the signal generator output lead from the grid of 6A8G tube, and connect it through the .1 mfd. condenser to terminal No. 1 on aerial input panel, and the generator ground lead to terminal No. 3, rear of chassis.
(a) Terminals 2 and 3 of aerial input panel must be connected with connector link provided on the panel, during these adjustments.

2—Set the tuning range switch in position No. 3 (Short Wave). Turn the signal generator and receiver dials to 18 M. C. and adjust compensators 23b Osc., 8b R. F. and 4b Ant. for maximum output (see note (a) below).
(a) The adjustment of the Radio Frequency compensator on the high frequency range causes a slight detuning of the oscillator circuit. In order to overcome this detuning effect, connect a variable condenser of approximately 350 mmfd., having a good vernier drive, across the oscillator section of the tuning condenser. Leaving the signal generator and receiver dials at 18 M. C., tune the added condenser so that the second harmonic of the receiver oscillator will beat against the signal from the 088 signal generator bringing in the signal. The antenna and R. F. compensator 4b and 8b should then be adjusted to give maximum output. Now remove the external condenser and turn compensator 23b to maximum capacity (clockwise) then without moving signal generator or receiver tuning condenser, back off compensator 23b (counter-clockwise) until a second peak is reached on the output meter. The first peak is caused by tuning to the image frequency signal and must not be used.

Tuning Range—2.3 to 7.4 M. C.

1—Turn the range switch to position No. 2 (police). Rotate the signal generator and receiver dials to 7.0 M. C. Then adjust compensator 23a for maximum output. Now turn the signal generator and receiver dials to 6.0 M. C. and adjust compensators 4a R. F. and 4a Ant. for maximum reading on the output meter.

Tuning Range—530 to 1720 K. C.

1—Set the range switch in position No. 1 (Broadcast). Set the 088 Signal Generator indicator at 800 K. C. and the receiver dial at 1600 K. C.
(a) In adjusting the receiver at 1600 K. C. the second harmonic of 800 K. C., to which the signal generator is tuned, is used. The second harmonic of 800 K. C. is 1600 K. C. Now adjust compensators 23 Osc., 8 R. F. and 4 Ant. for maximum reading on output meter.

2—The low frequency end of the range is now tuned by turning the signal generator and receiver dials to 600 K. C. and adjusting compensator 21 Osc. series (see Note (a) below) for maximum reading on output meter.
(a) While compensator 21 is being adjusted, the tuning condenser must be rolled for maximum output. This is accomplished as follows: First tune compensator 21 for maximum output. Then vary the tuning condenser for maximum output at 600 K. C. Now retune compensator 21 and again vary the tuning condenser back and forth at 600 K. C. for maximum output. This operation of first turning the compensator then the tuning condenser is continued until maximum output is obtained at the 600 K. C. frequency.

3—After the low frequency (600 K. C.) end of the range is adjusted, the 1600 K. C. end is readjusted, as given in Paragraph (1) above, to correct any variation that the low frequency series compensator may have caused in the alignment of the high frequency end.

4—Now turn the signal generator and receiver dials to 1500 K. C. and readjust compensators 4 Ant., and 8 R. F., for maximum output.

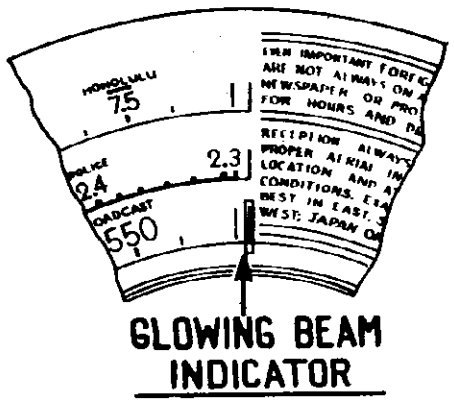

Fig. 5—Dial Calibration

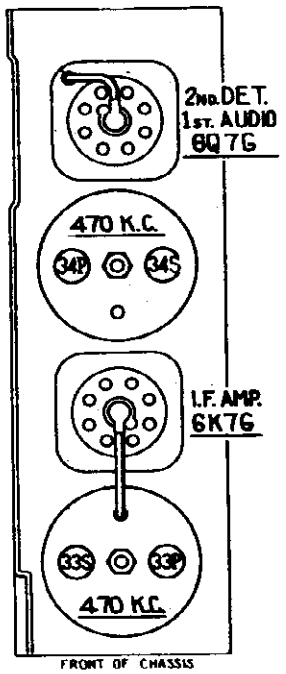

Fig. 6 -Location of I. F. Compensators

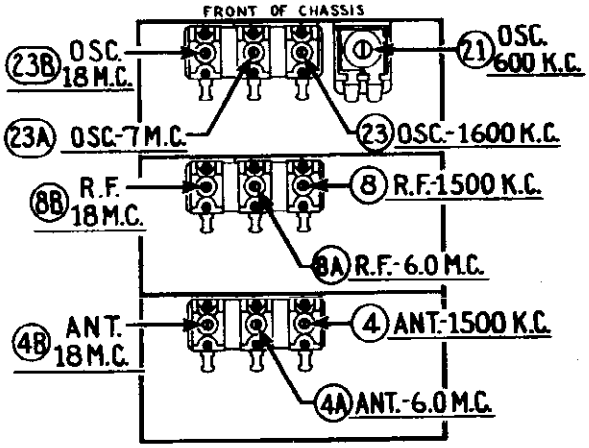

Fig. 7—Locations of R. F. Compensators

©John F. Rider, Publisher

PHILCO RADIO & TELEV. CORP.

MODEL 37-640
Voltage, Socket
Transformer Data
Notes

Model 37-640 is a 7 tube superheterodyne receiver for operation on alternating current, having three tuning ranges, covering standard broadcast and short-wave frequencies. The chassis is constructed in three basic assembly units, concentrating the R. F., I. F. and Audio Output circuits in individual units.

The circuit consists of the **"PHILCO FOREIGN TUNING SYSTEM"**—controlled by the range switch—providing maximum sensitivity and noise reduction, when used with the **PHILCO HIGH EFFICIENCY AERIAL.** One stage of radio frequency amplification which increases the signal to noise ratio, Automatic Bass Compensation in the volume control circuit, Shadow Tuning, a separate diode circuit for the Automatic Volume Control and a push-pull pentode audio output circuit are also incorporated in this receiver.

Aerial Connections

The Philco High Efficiency Aerial is recommended, for use with this receiver, to obtain maximum performance. A terminal panel is provided at the rear of the chassis for connecting the aerial. This panel contains four screw terminals and a connecting link.

When using the PHILCO HIGH EFFICIENCY AERIAL connect the red and black leads of the Aerial transmission line (lead-in) to terminals 1 and 2 respectively and the ground lead to terminal 3. The connector link should be across terminals 3 and 4.

If a temporary aerial and ground is used shift the connecting link to rest across terminals 2 and 3 and connect the aerial and ground to terminals 1 and 3 respectively.

REMOVING SWITCH AND COIL ASSEMBLIES FROM R. F. UNIT

Remove the center mounting screw on the rear of the R. F. unit. Then lift the rear of the unit and push forward until the rubber mounting grommet, on each side of the unit, clear the mounting slots. The unit is then lifted far enough from the chassis for removal of the two screws holding the selector switch indexing plate and shaft (front of the unit) then pull shaft straight out. Removal of the volume control shaft is also necessary.

IMPORTANT—When selector switch shaft is replaced, care should be taken to have all wafer rotors in the same position so that index projection on the end of shaft will slide freely into notched hole in wafer rotors. **Never** force shaft into rotors.

AERIAL SWITCH AND COIL ASSEMBLY. FIRST SECTION FROM REAR OF UNIT

a. Remove screw holding shield plate to unit base. This screw is located in the right hand corner of shield plate, facing rear underside of chassis.

b. Unsolder the leads connecting the range switch to the aerial panel and I. F. terminal panel; tubular condenser ⑥ to the tuning condenser stator plate and ground lead from assembly shield to unit frame— lift assembly straight out of unit.

R. F. AMPLIFIER ASSEMBLY, CENTER SECTION

a. Remove screw holding shield plate to unit base.

b. Unsolder the leads connecting the range switch to I. F. terminal panel and 6K7G plate socket contact, tubular condenser ⑮ to the tuning condenser housing, selector switch contact (D2) to the tuning condenser stator plates, tubular condenser ⑭ to shield ground lug and shield to R. F. unit base. The amplifier assembly may then be removed.

OSCILLATOR SWITCH AND COIL ASSEMBLY. THIRD SECTION FROM REAR OF UNIT

a. The oscillator assembly may now be removed by unscrewing the four screws holding shield to R. F. base. These screws are located on each side of the R. F. base.

b. Unsolder the leads connecting range switch to the 6K7G socket contacts and terminal panel in the I. F. unit, condenser ⑰ lead from tuning condenser housing and lead connecting selector switch to the tuning condenser stator plates. Then unsolder wires connecting selector switch to electrolytic condenser ⑯ and 6A8G socket contacts.

Parts are replaced by following the above procedure in the reverse order.

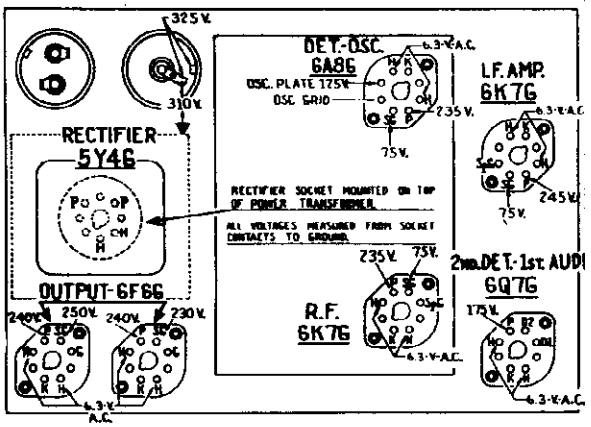

Fig. 1—Socket Voltages Measured from Underside of Chassis

The voltages indicated by arrows were measured with a **Philco 02 Circuit Tester** which contains a voltmeter having a resistance of 100 ohms per volt. Volume Control at minimum, range switch in broadcas position, line voltage 115 A. C.

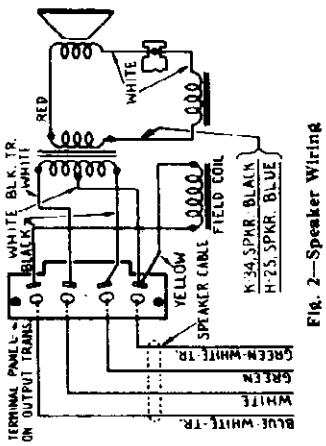

Fig. 2—Speaker Wiring

Electrical Specifications

Voltage Rating: 115 A. C. **Undistorted Output:** 5 watts.
Frequency Rating: 50 to 60 cycle. **Intermediate Frequency:** 470 K. C.
For 25 to 40 cycle operation use **Tuning Ranges:** Three. Range 1—530 to 1720 K. C. Range 2—
Power Transformer marked with 2.3 to 7.4 M. C. Range 3—7.35 to 22 M. C.
asterisk in parts list. **Speakers:** K-34 B Cabinet.

POWER TRANSFORMER DATA

Schematic Lead Number	A.C. Volts	Current	Circuit	Color	Resistance
1-2	120	....	Pri.	White	3 ohms
3-4	5.0	2.0A	Fil. Rect.	Blue	1 ohms
5-7	670	100 MA	High Voltage Sec.	Yellow	70 ohms 75 ohms
6	....	....	Center Top of 5-7	.....	Yellow Green
8-9	6.7	3.0A	Fil. Tubes	Black	1 ohm

©John F. Rider, Publisher

MODEL 37-640
Chassis
Parts List

PHILCO RADIO & TELEV. CORP.

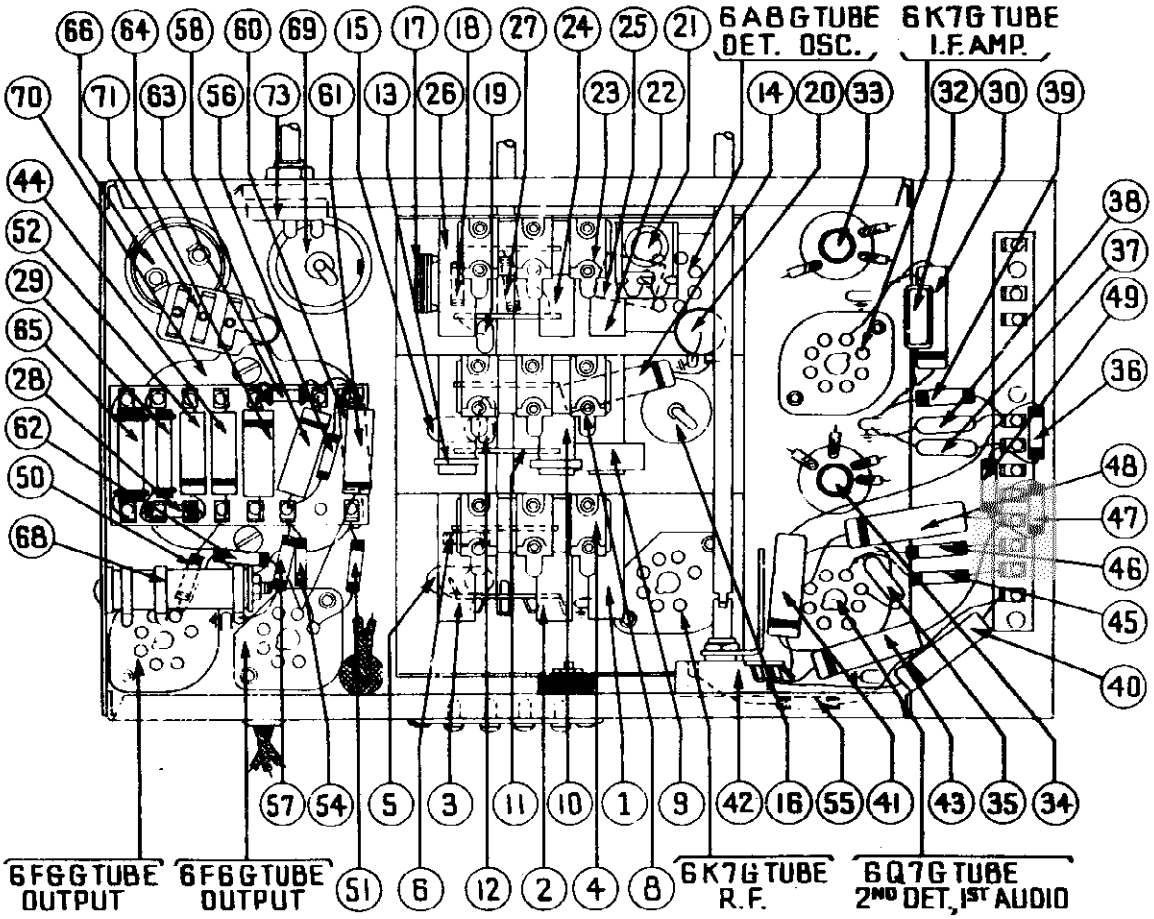

Fig. 4—Base View

Replacement Parts—Model 37-640

Schem. No.	Description	Part No.	List Price
1	Antenna Transformer (Broadcast)	32-2105	$0.80
2	Antenna Transformer (Police)	32-2119	.65
3	Antenna Transformer (S. W.)	32-2109	.75
4	Compensating Condensers Ant.	31-6002	.60
5	Condenser (.05 mfd. tubular)	30-4020	.20
6	Resistor (51000 ohms ½ watt)	33-351339	.20
7	Tuning Condenser	31-1520	5.00
8	Compensating Condensers R. F.	31-6002	.60
9	R. F. Transformer (Broadcast)	32-2106	.75
10	R. F. Transformer (Police)	32-2106	.65
11	Condenser		
12	Condenser (14 mmfd. mica)	30-1073	.20
13	R. F. Transformer (S. W.)	32-2126	.55
14	Condenser (.05 mfd. tubular)	30-4123	.20
15	Condenser (.05 mfd. tubular)	30-4020	.20
16	Electrolytic Condenser (16 mfd.)	30-2118	1.65
17	Condenser (3500 mmfd. semi-fixed)	31-6007	.50
18	Resistor (10000 ohms ½ watt)	33-310339	.20
19	Condenser (250 mmfd. mica)	30-1032	.25
20	Condenser (.1 mfd. tubular)	30-4170	.25
21	Compensator (Osc. Series Broadcast)	31-6056	.55
22	Osc. Transformer (Broadcast)	32-2120	.65
23	Compensating Condensers Osc.	31-6002	.60
24	Osc. Transformer (Police)	32-2121	.40
25	Condenser (1650 mmfd. semi-fixed)	31-6006	.40
26	Osc. Transformer (S. W.)	32-2110	.75
27	Resistor (32000 ohms ½ watt)	33-332339	.20
28	Resistor (40000 ohms ½ watt)	33-340339	.20
29	Resistor (15000 ohms 1 watt)	33-315439	.20
30	Condenser (.25 mfd. tubular)	30-4446	.20
31	Shadow meter	45-2189	2.50
32	Resistor, 700 ohms, Violet, Black, Brown	33-1220	.20
33	1st I. F. Transformer	32-2100	1.50
34	2nd I. F. Transformer	32-2102	1.50
35	Condenser (110 mmfd. mica)	30-1031	.20
36	Resistor (51000 ohms, ½ watt)	33-351339	.20
37	Condenser (110 mmfd. mica)	30-1031	.20
38	Condenser (110 mmfd. mica)	30-1031	.20
39	Resistor (490000 ohms ½ watt)	33-449339	.20
40	Condenser (.008 mfd. tubular)	30-4112	.20
41	Condenser (.01 mfd. tubular)	30-4124	.25
42	Volume Control	33-5158	1.00
43	Condenser (.015 mfd. tubular)	30-4358	.20
44	Condenser (.02 mfd. tubular)	30-4113	.20
45	Resistor (1 megohm ½ watt)	33-510339	.20
46	Resistor (1 megohm ½ watt)	33-510339	.20
47	Resistor (1 megohm ½ watt)	33-510339	.20
48	Condenser (.1 mfd. tubular)	30-4122	.20
49	Resistor (490000 ohms ½ watt)	33-449339	$0.20
50	Resistor (70000 ohms ½ watt)	33-370339	.20
51	Resistor (70000 ohms ½ watt)	33-370339	.20
52	Condenser (.003 mfd. tubular)	30-4042	.20
53	Output Transformer B. X. MX	32-7634	1.50
54	Resistor (190000 ohms ½ watt)	33-419339	.20
55	Resistor (51000 ohms ½ watt)	33-351339	.20
56	Resistor (99000 ohms ½ watt)	33-399339	.20
57	Resistor (490000 ohms ½ watt)	33-449339	.20
58	Condenser (.1 mfd. tubular)	30-4122	.20
59	Cone & Voice Coil K-34 Speaker	36-3174	.80
	Cone & Voice Coil H-25 Speaker	02625	1.30
60	Condenser (.003 mfd. tubular)	30-4042	.20
61	Condenser (.05 mfd. tubular)	30-4123	.20
62	Resistor (3500 ohms ½ watt)	33-235339	.20
63	Resistor (330000 ohms ½ watt)	33-433339	.20
64	Condenser (.05 mfd. tubular)	30-4454	.25
65	Resistor (10000 ohms 2 watt)	33-313539	
66	Electrolytic Condenser	30-2045	1.80
67	Field Coil Assembly K-34 Speaker	36-3239	3.75
	Field Coil Assembly H-25 Speaker	36-3218	3.50
68	Bias Resistor	33-3276	.20
69	Electrolytic Condenser (12 mfd.)	30-2117	1.20
70	Power Transformer 115 V., 50-60 cycles	32-7597	5.25
	Power Transformer 115 V., 25-40 cycles	32-7598	
71	Condenser (.015-.015 mfd. double)	3793-DG	.40
72	Pilot Lamp	34-2039	.15
73	Tone Control & A. C. Switch	42-1182	.75
74	Ant. Switch	42-1170	1.10
75	R. F. Range Switch	42-1171	1.00
76	Osc. Range Switch	42-1172	1.10
	Selector Switch Indexing Plate & Shaft	42-1173	.50
	Pilot Lamp Assembly	38-7706	.35
	Dial	27-5214	.40
	Dial Hub	28-7187	.12
	Dial Clamp	28-2637	.10
	Set Screw	W-1641	.02
	Dial Guard	27-8324	.02
	Dial Gear	28-7185	.10
	Thrust Spring	26-8611	.01
	C Washer	28-3904	.01
	Thrust Washer	28-3976 Per C	.20
	Drive Gear	31-1884	.25
	Vernier Drive	31-1871	.75
	Mask	27-5198	.30
	Mask Arm Assembly	31-1866	.35
	Mask Guide Lamp Bracket Support	38-7844	.15
	Mask Washer	27-8318 Per C	.50
	Indicator Bracket & Lens Assem.	38-7912	$0.30
	Spring	28-8624 Per C	.50
	Lens	27-8310	.02
	Volume Control Shaft	28-6498	.10
	Volume Control Shaft Spring	28-4117 Per C	.40
	Retaining Clips	28-8610	.03
	Washer	28-4186 Per C	.75
	Washer	4436 Per C	1.50
	Socket Power Trans.	27-6053	
	Socket 8 prong	27-6058	.11
	Socket 7 prong	27-6057	.11
	Tube Shield	28-2726	.10
	Tube Shield Base	28-3866	.03
	I. F. Shield	38-7762	.20
	Terminal Panel I. F. Unit	38-7703	.25
	Spacer	28-4001 Per C	.25
	Grommet Mtg. Tuning Condenser	27-4325	.02
	Grommet R. F. Unit	27-4317	.04
	Sleeve Mtg. R. F. Unit	28-2257	.01
	Spacer Mtg. R. F. Unit	27-7897 Per C	.50
	Screw Mtg. R. F. Unit	W-729 Per C	.45
	Washer Mtg. R. F. Unit	28-3927	.01
	Insulator Mtg. Electrolytic Condenser	27-7194	.01
	Bracket Mtg. Electrolytic Condenser	6440	.05
	Nut Mtg. Volume & Tone Control	W-684	1.25
	Antenna Panel	38-7714	.15
	Speaker Cable	41-3201	
	A. C. Cord	L-2183	.40
	Knob Tuning	27-4330	.10
	Knobs Tuning Vernier	27-4331	.10
	Knob Wave Switch	27-4326	.10
	Knob Tone & Volume	27-4332	.10
	Shadow Meter Mtg. Spring	28-8632 Per C	.70
	Speaker K-34, B Cabinet	36-1229	7.25
	Speaker H-25	36-1236	8.25
	Model B Cabinet		
	Bezel Frame & Plate Assembly	40-5927	.30
	Glass	27-4296	.05
	Bezel Ring	28-3967	.35
	Gasket	27-8311	.01
	Model X & MX Cabinets		
	Bottom Shield Plate	28-3995	
	Bezel Frame & Plate Assembly	40-5945	.70
	Gasket	27-8312	.01
	Screws	W-1644 Per C	.50
	Glass	28-3997	.06
	Ring	28-3967	.40

Figures in black type indicate circled figures in Bo · View.

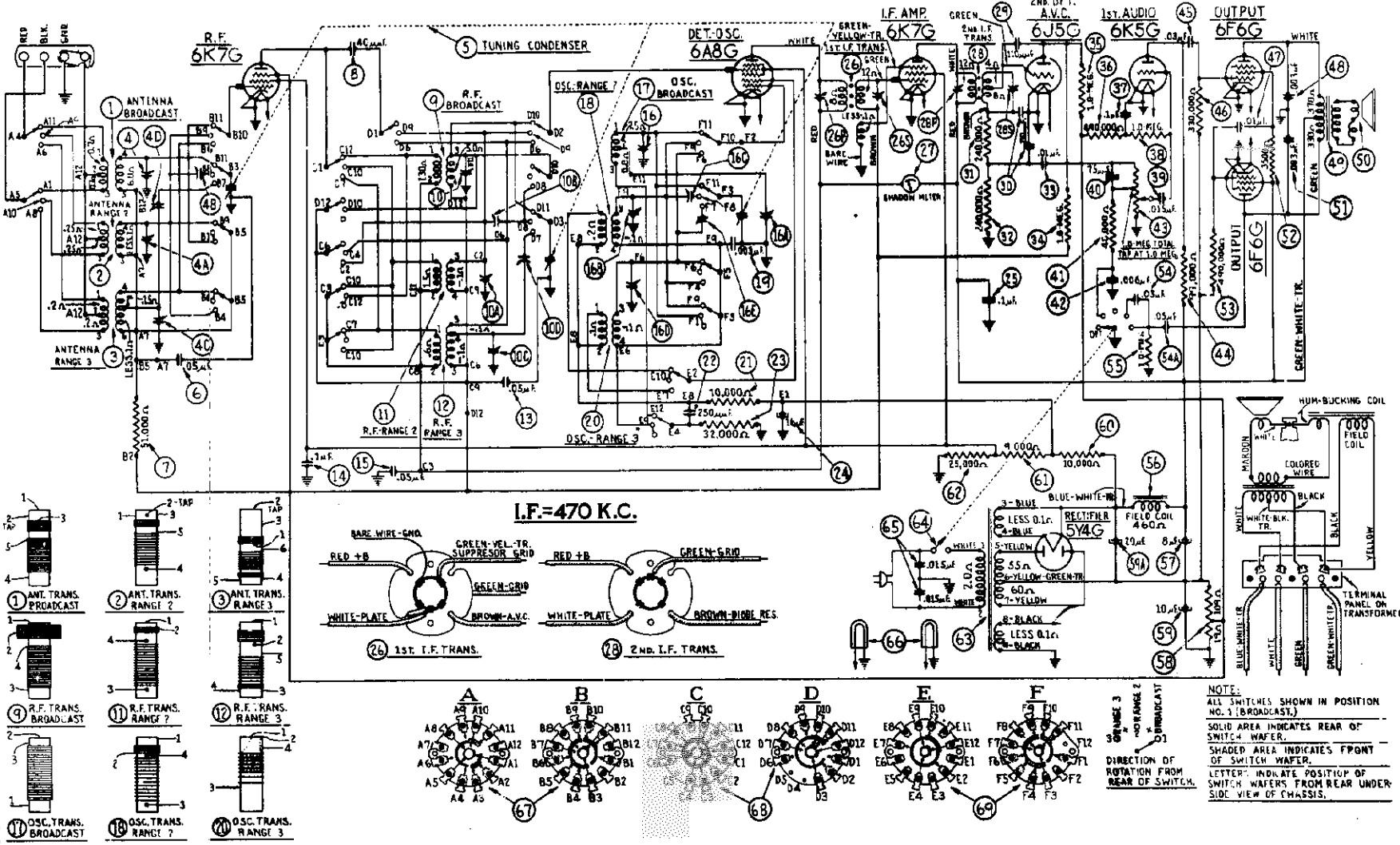

Fig. 2—Schematic Diagram

Model 37-650

Electrical Specifications

Power Supply:	Voltage	Frequency Cycles	Consumption
	115	50-60	110 watts
	115	25-40	110 watts

Intermediate Frequency: 470 K. C.
Output: Undistorted 7 watts.

Philco Tubes: 6K7G—R. F. Amplifier; 6A8G—Oscillator and first detector; 6K7G—I. F. Amplifier; 6J5G—2nd Detector, A. V. C.; 6K5G—1st Audio; 2-6F6G—Output; 5Y4G—Rectifier.
Tuning Ranges: Range 1—530 to 1720 K. C.; Range 2—5.7 to 11.6 M. C.; Range 3—11.5 to 18.2 M. C.
Speakers: X Cabinet—H-26; B Cabinet—K-35.

MODEL 37-650
Trimmers
Alignment

PHILCO RADIO & TELEV. CORP.

Alignment of Compensators

The accurate adjustment of the various compensating condensers is vital to the proper functioning of this receiver. There are four compensating condensers in the I. F. Circuit, six in the Oscillator Circuit, five in the R. F. Amplifier Circuit and five in the Antenna Circuit. Incorrect adjustment will cause loss of sensitivity, unsatisfactory tone, and poor selectivity.

The locations of the various compensators are shown in Figs. 5 and 6.

The following procedure must be observed in adjusting the compensators:—

SHADOWMETER ADJUSTMENT

1. Remove the aerial and allow tubes to warm up. Then adjust shadowmeter as follows: Move the coil backward and forward until opposite edges of the shadow are 1/8 of an inch from each end of shadow screen, measuring along bottom edge. Adjustment of the shadowmeter light bracket may be necessary for perfect centering.
2. Remove the (5Y4G) rectifier tube from its socket and rotate coil until shadow reaches minimum width. This width is not to exceed 1/16".
3. Replace the (5Y4G) rectifier tube. Shadow must not widen to more than 1/16" or less than 1/32" from each side of screen. If these limits are not obtained readjust the shadowmeter as given in paragraphs 1 and 2 until they are reached.

OUTPUT METER— The 025 Output Meter is connected to the plate and cathode terminals of one of the (6F6G) tubes. Adjust the meter to use the (0-30) volt scale.

DIAL CALIBRATION—Rotate the tuning condenser control to the extreme counter-clockwise position (maximum capacity). Loosen the screw of dial hub, then turn dial until the glowing indicator is centered on the second index line of dial scale (see Fig. 4). Then tighten the dial hub set screw in this position.

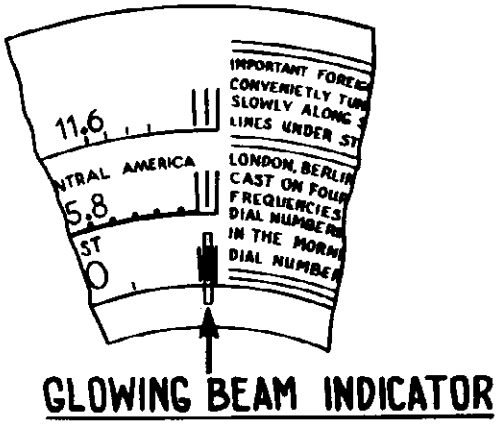

Fig. 4—Dial Calibration

INTERMEDIATE FREQUENCY CIRCUIT

Frequency 470 K. C.

1. Turn volume control to maximum volume position. Connect the 088 Signal Generator output through a .1 mfd. condenser, to the control grid of the 6A8G tube and the ground connection of the output lead to the chassis.
2. Set the range switch in position No. 1 (Broadcast), then rotate the tuning condenser of the receiver to the maximum capacity position (counter-clockwise) and adjust the signal generator for 470 K. C.
3. Adjust compensators (28S) 2nd I. F. Sec., (28P) 2nd I. F. Pri., (26S) 1st I. F. Sec. and (26P) 1st I. F. Pri. for maximum reading on the output meter.

RADIO FREQUENCY CIRCUIT

Tuning Range—7.3 to 18.0 M. C.

1. Remove the signal generator output lead from the grid of the 6A8G tube and connect it through the .1 mfd. condenser to terminal No. 1 on aerial input panel and the generator ground lead to terminal No. 3, rear of chassis. Terminals 2 and 3 must be connected with the shorting link provided on the panel during these adjustments.
2. Set the range switch in position No. 3. Turn the receiver and signal generator dials to 18 M. C. Now adjust compensator (16D) by turning the screw (clockwise) to the maximum capacity position. Then slowly turn it counter-clockwise until a second peak signal is reached on the output meter. The first peak from maximum capacity is the image signal and must not be used. NOTE: In some cases only one peak will be found, therefore, tune the compensator to this peak. If the above procedure is correctly performed, the image signal will be found at 17.060 M. C., by advancing signal generator input and turning receiver dial to this frequency mark on the dial.
3. The antenna and R. F. compensators (4C) and (10C) are now adjusted by connecting a variable condenser of approximately 350 mmfd.—having a good vernier drive—across the oscillator compensator (16D) contact (first contact from left side of receiver facing rear underside view of chassis) and ground. Leaving the signal generator and receiver dials at 18 M. C., tune the added condenser until the second harmonic of the receiver oscillator beats against the signal from the generator, thereby giving an indication on the output meter. It may be necessary to increase the signal generator output to obtain a signal of sufficient strength for reading on the output meter. The antenna and R. F. compensators (4C) and (10C) should then be adjusted for maximum output. Then remove external condenser and readjust compensator (16D) as given in paragraph 2 above.
4. Turn signal generator and receiver dials to 12 M. C. and adjust compensators (16E), (10D), (4D) for maximum output.
5. Now turn signal generator and receiver dials to 18 M. C. and readjust compensators (16D), (10C) and (4C) as given in Paragraphs 2 and 3 above.

Tuning Range—5.7 to 11.6

1. Set range switch in position No. 2. Rotate signal generator and receiver dials to 11 M. C. Compensator (16B) is now adjusted as given in Paragraph 2, under tuning range 7.3 to 18 M. C. above. *Check image signal on the 10.06 dial mark.* The only difference in the two procedures is the frequency used.
2. Turn the signal generator to 11 M. C. Then connect a 350 mmfd. variable condenser from the oscillator compensator (16B) contact (third contact from left side of the receiver, facing rear underside view of chassis) and ground. Tune the added condenser, as given in Paragraph 3 under tuning range 7.3 to 18 M. C. Now adjust compensators (10A) and (4A) for maximum output. The only difference in the two procedures is in the connection of the variable condenser and the frequency used.
3. Readjust compensator (16B) as given in Paragraph 1 for maximum output.
4. Turn signal generator and receiver dials to 6 M. C. and adjust compensators (16C), (10B) and (4B) for maximum output.
5. After the 6 M. C. end of scale is adjusted, the high frequency end is readjusted as given in Paragraphs 1, 2 and 3 above.

Tuning Range—530 to 1720 K. C.

1. Turn signal generator and receiver dials to 1600 K. C.—If signal generator scale is not calibrated for 1600 K. C. the dial of the generator may be rotated to 800 K. C. and the second harmonic of this frequency (1600 K. C.) may be used for following adjustments. Compensators (16), (10) and (4) are now adjusted for maximum output.
2. Turn signal generator and receiver dials to 580 K. C. and adjust compensator (16A) for maximum output. This is accomplished as follows:
First tune compensator (16A) for maximum output. Then vary the tuning condenser for maximum output about the 580 K. C. scale mark. Now retune compensator (16A), and again vary the tuning condenser back and forth about 580 K. C. for maximum output. This operation of first tuning the compensator, then the tuning condenser is continued until maximum output is obtained on or about the 580 K. C. dial mark.
3. Turn signal generator and receiver dials to 1600 K. C. and readjust compensator (16) for maximum output.
4. Now rotate signal generator and receiver dials to 1500 K. C. and adjust compensators (10) and (4) for maximum output.

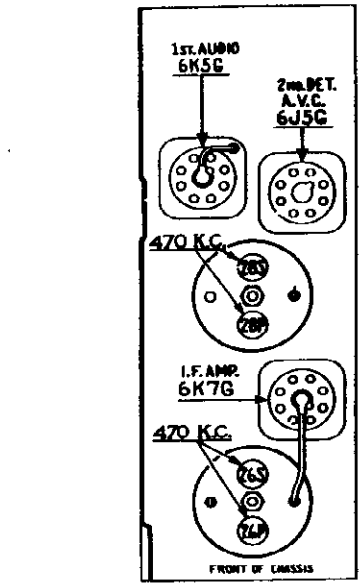

Fig. 5—I. F. Compensators—Top of Chassis

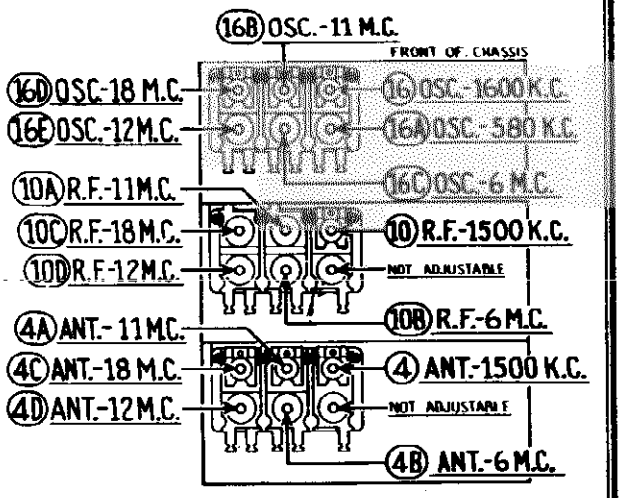

Fig. 6—R. F. Compensators—Underside of Chassis

©John F. Rider Publisher

MODEL 37-650
Voltage, Socket
Transformer Data
Notes

PHILCO RADIO & TELEV. CORP.

SERVICE DATA

DESCRIPTION

Model 37-650 is an 8 tube superheterodyne receiver for operation on alternating current. It has three tuning ranges, covering standard broadcast and short-wave frequencies. The chassis is constructed in four basic assembly units, concentrating the R. F., I. F., Audio and Power Circuits in individual units.

The circuit includes the **Philco Foreign Tuning System**—controlled by the range switch—providing maximum sensitivity and noise reduction, when used with the **Philco High Efficiency Aerial**; one stage of radio frequency amplification before the Detector-Oscillator tube; Automatic Bass Compensation in the Volume Control Circuit; Shadow Tuning; Automatic Volume Control, and a Push-Pull Pentode Output Circuit.

AERIAL CONNECTIONS

The red and black leads of the High-Efficiency Aerial "transmission line" are connected to terminals 1 and 2 respectively, of the terminal panel provided at the rear of the chassis. Connect the jumper on the terminal panel across terminals 3 and 4.

If a temporary aerial is used, the jumper should be across terminals 2 and 3. The aerial connects to terminal 1 and the ground lead to terminal 3. A good ground connection is desirable in all installations.

REPLACING DIAL

To replace the dial, remove the clamp holding the dial to the hub by turning clamp counter-clockwise, using the two holes provided on the clamp for this purpose.

REMOVING MASK ARM & LINK ASSEMBLY

First remove dial, then loosen set screw of dial hub and remove the hub and felt washer from the shaft. Now loosen screws holding indicator bracket and lens assembly, and move bracket forward about ½ inch. The assembly may now be removed by loosening set screw of range switch arm, then pull arm off of range switch shaft.

REMOVING SWITCH & COIL ASSEMBLIES OF R. F. UNIT

To replace any part in the switch and coil assemblies of the R. F. Unit, each assembly can be removed separately as follows:

First remove the tuning dial, mask and arm assembly. Remove the center mounting screw on the rear of the R. F. Unit. Then lift the rear of the unit and push forward until the rubber mounting grommets, on each side of the unit, clear the mounting slots. The unit is then lifted far enough from the chassis for removal of the two screws holding the selector switch indexing plate and shaft (front of unit). Then pull shaft straight out from the unit. Also, remove the volume control shaft by releasing the retaining clip, inside the chassis, from the shaft.

IMPORTANT—When selector switch shaft is replaced, care should be taken to have all wafer rotors in the same position, so that the key on the switch shaft will slide freely into the notched hole in each wafer rotor. *NEVER* force shaft into rotors.

Servicing Stages—It is necessary to unsolder some connecting leads in order to release the stage for servicing. If all the following connections are unfastened the stage will be entirely released. Ordinarily only one or two leads need be loosened in order to change coils, replace coupling condensers, or replace switch sections.

Antenna Stage Assembly—Rear Section of Unit

A. Remove screw holding shield plate to the unit base. This screw is located in the right hand corner of the shield plate, facing rear underside of the chassis.

B. Unsolder the wires at the I. F. and Aerial terminal panels which connect to the range switch, also wires from tuning condenser housing to tubular condenser (6); tuning condenser stator plate to selector switch contact (B3), and ground lead from assembly shield to unit frame. After disconnecting these wires assembly may be removed.

R. F. Stage Assembly—Middle Section

A. Remove screw (right side of assembly) holding shield plate to unit base.

B. Unsolder the two wires connecting the I. F. Unit to range switch contacts (C3) and (D12); also wires connecting tuning condenser housing to tubular condenser ⑱ and stator plates to selector switch contact (D3); selector switch contact (D2) to the grid of the 6A8G tube, and ground lead from shield to unit frame. Remove assembly from the unit.

Oscillator Stage Assembly—Front Section

A. The oscillator assembly may be removed by unscrewing the four screws holding shield to R. F. base. These screws are located on each side of the R. F. Unit.

B. Unsolder the wires connecting range switch contacts (E2) and (F2) to the 6A8G socket; tuning condenser stator plates to range switch contact (F3); mica condenser ⑲ to the tuning condenser housing; range switch to resistor ⑧ and ⑪, and ground lead to I. F. Unit. With these leads disconnect unit may be removed.

Replace the units by following the above procedure in the reverse order.

POWER TRANSFORMER DATA

Schematic Lead No.	A.C. Volts	Current	Circuit	Color	Resistance
1-2	190	—	Pri.	White	2.0 ohm
3-4	5.	2.0A	Rect. Fil.	Blue	Less than 0.1 ohm
5-7	700	185 MA	High Volt. Sec.	Yellow	56 ohms 60 ohms
6	—	—	Center Tap 5-7	Yellow Green tr.	—
8-9	6.7	3.3 A	Fil.	Black	Less than 0.1 ohm

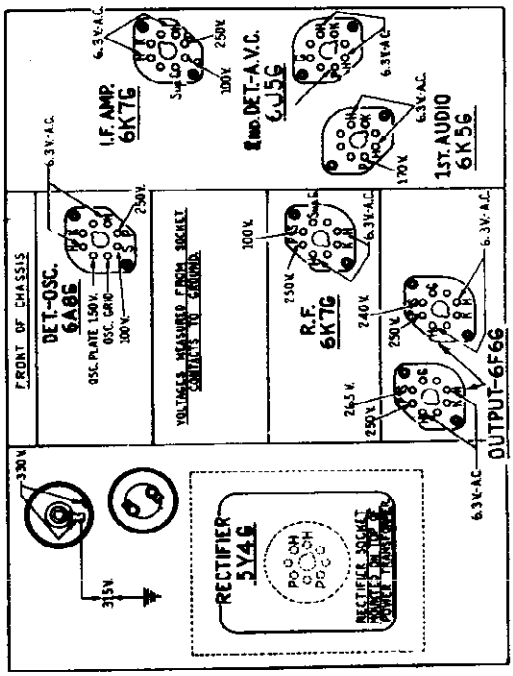

Fig. 1—Socket Voltages—Underside of Chassis View

The voltages indicated by arrows were measured with a Philco 625 Circuit Tester which contains a voltmeter having a resistance of 1000 ohms per volt. Volume Control at minimum, range switch in broadcast position, line voltage 115 A. C.

©John F. Rider, Publisher

MODEL 37-650
Chassis
Parts List

PHILCO RADIO & TELEV. CORP.

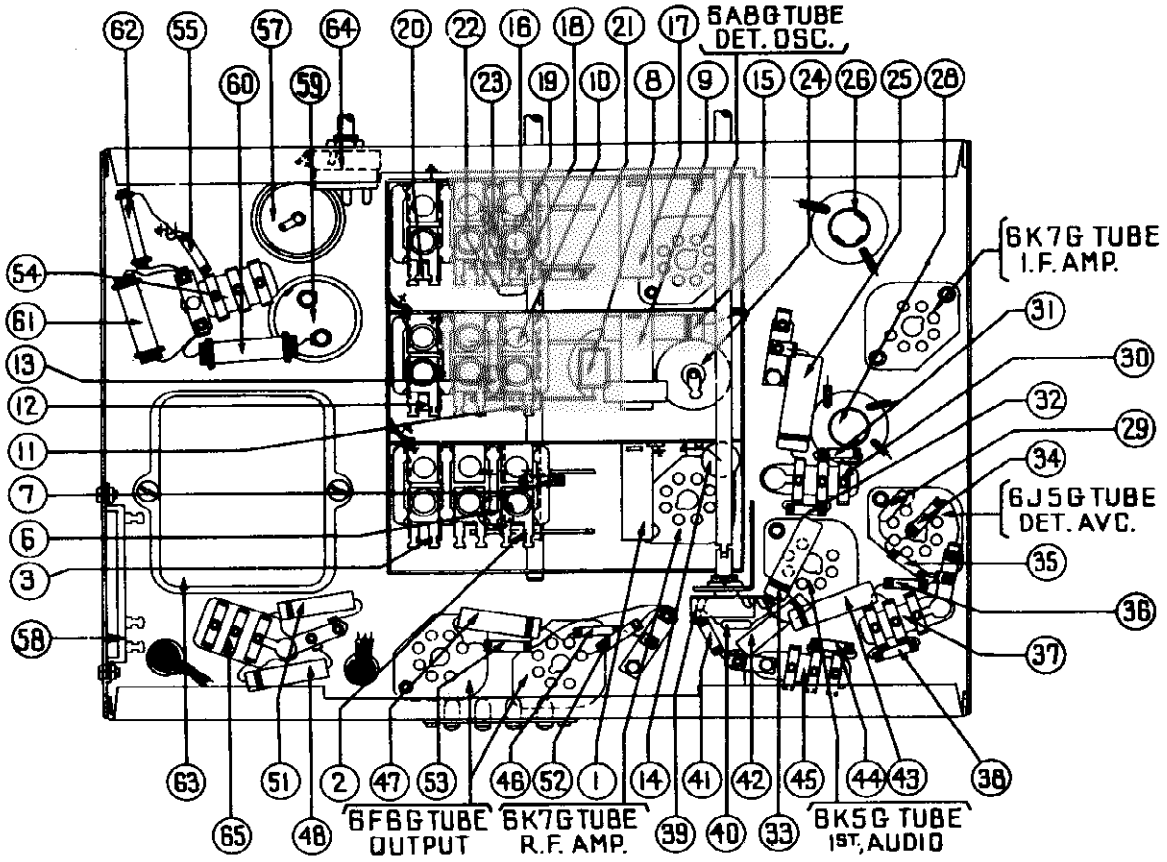

Fig. 3—Base View

Replacement Parts—Model 37-650

Schem. No.	Description	Part No.	Price List
1	Ant. Transformer (Broadcast)	32-2108	$0.80
2	Ant. Transformer	32-2150	.80
3	Ant. Transformer (S. W.)	32-2175	.90
4	Compensator Ant. (Five sections)	31-6104	
5	Tuning Condenser	31-1855	4.50
6	Condenser (.05 mfd. tubular)	30-4020	.20
7	Resistor (51000 ohms, ½ watt)	33-351339	.20
8	Condenser (40 mmfd. mica)	30-1076	.20
9	R. F. Transformer (Broadcast)	32-2105	.75
10	Compensator (R. F.) (Five sections)	31-6110	
11	R. F. Transformer	32-2151	.60
12	R. F. Transformer (S. W.)	32-2176	.70
13	Condenser (.05 mfd. tubular)	30-4020	.20
14	Condenser (.1 mfd. tubular)	30-4170	.25
15	Condenser (.05 mfd. tubular)	30-4123	.20
16	Compensator Osc. (Six sections)	31-6111	
17	Osc. Transformer (Broadcast)	32-2120	.65
18	Osc. Transformer	32-2152	.75
19	Condenser (.003 mfd. mica)	30-1028	.45
20	Osc. Transformer (S. W.)	32-2182	.70
21	Resistor (10000 ohms, ½ watt)	33-310339	.20
22	Condenser (250 mmfd. mica)	30-1032	.25
23	Resistor (32000 ohms, ½ watt)	33-332339	.20
24	Electrolytic Condenser (16 mfd.)	30-2118	1.65
25	Condenser (.1 mfd. tubular)	30-4170	.25
26	1st I. F. Transformer & Compensators	32-2169	
27	Shadow meter	45-2189	2.50
28	2nd I. F. Transformer & Compensators	32-2171	
29	Condenser (110 mmfd. mica)	30-1031	.20
30	Condenser (110 mmfd. double bakelite)	8035-DG	.25
31	Resistor (240000 ohms, ½ watt)	33-424339	.20
32	Resistor (240000 ohms, ½ watt)	33-424339	.20
33	Condenser (.01 mfd. tubular)	30-4124	.20
34	Resistor (1 megohm, ½ watt)	33-510339	.20
35	Resistor (1 megohm, ½ watt)	33-510339	.20
36	Resistor (190000 ohms, ½ watt)	33-449339	.20
37	Condenser (.1 mfd. bakelite)	4989-SG	.35
38	Resistor (1 megohm, ½ watt)	33-510339	.20
39	Volume Control	33-5158	1.00
40	Condenser (.75 mmfd. mica)	30-1053	.20
41	Resistor (40000 ohms, ½ watt)	33-340339	.20
42	Condenser (.006 mfd. tubular)	30-4125	.20
43	Condenser (.015 mfd. tubular)	30-4358	.20
44	Resistor (99000, ½ watt)	33-399339	.20
45	Condenser (.03 mfd. bakelite)	8318-SU	.35
46	Resistor (330000 ohms, ½ watt)	33-433339	.20
47	Condenser (.01 mfd. tubular)	30-4169	.20
48	Condenser (.003 mfd. tubular)	30-4469	.20
49	Output Transformer K35-H26	32-7634	$1.50
50	Cone and Voice Coil K35	36-3174	.80
	Cone and Voice Coil H26	09635	1.20
51	Condenser (.003 mfd. tubular)	30-4469	
52	Resistor (3500 ohms, ½ watt)	33-235339	.20
53	Resistor (490000 ohms, ½ watt)	33-449339	.20
54	Condenser (.05 mfd., .03 mfd. bakelite)	3615-YU	
55	Resistor (1 megohm, ½ watt)	33-510339	.20
56	Field Coil K35-H26	36-3687	
57	Electrolytic Condenser 8.0 mfd.	30-2024	1.10
58	Bias Resistor	33-3280	
59	Electrolytic Condenser (10, 20 mfd.)	30-2163	
60	Resistor (10000 ohms, 2 watt)	33-310539	
61	Resistor (9000 ohms, 2 watt)	33-290539	.35
62	Resistor (25000 ohms, 1 watt)	33-325339	.20
63	Power Transformer 115 V., 50-60 cycles	32-7606	
	Power Transformer 115 V., 25-40 cycles	32-7607	
64	Tone Control & A. C. Switch	42-1184	75
65	Condenser (.015 mfd. double bakelite)	3793-DG	.40
66	Pilot Lamp	34-2039	.15
67	Range Switch Ant.	42-1189	1.25
68	Range Switch R. F.	42-1190	1.25
69	Range Switch Osc.	42-1191	1.25
	Selector Switch Indexing Plate & Shaft	42-1192	.50
	Dial	27-5248	.40
	Dial Hub	28-7187	.12
	Dial Clamp	28-2837	.10
	Set Screw	W-1641	.02
	Retaining Washer	4436	Per C 1.50
	Gear (Dial)	28-7185	.10
	Gear Drive	31-1884	.25
	Thrust Spring	28-8611	.01
	Thrust Washer	28-3976	Per C .20
	C Washer	28-3904	.01
	Scale Guard	27-6324	
	Indicator Brkt. & Lens Assembly	38-7912	.30
	Pilot Lamp	34-2039	.15
	Pilot Lamp Assembly	38-7706	.35
	Mask	27-5198	.30
	Mask Arm & Link Assembly	31-1866	.35
	Mask Guide	38-7844	
	Mask Washer	27-8318	Per C .50
	Socket 8 prong	27-6058	.11
	Socket 7 prong	27-6057	.11
	Socket, Rect.	27-6052	
	Tube Shield Base	28-3898	.03
	Tube Shield	28-2796	$0.10
	Terminal Panel Assembly I. F.	38-4306	.03
	Terminal Panel Antenna	38-7714	.15
	Grommet Mtg. R. F. Unit	27-4317	.04
	Sleeve Mtg. R. F. Unit	28-2397	.01
	Screw Mtg. R. F. Unit	W-729	Per C .45
	Washer Mtg. R. F. Unit	28-3927	.01
	Washer Felt R. F. Unit	27-7807	Per C .40
	Grommet Mtg. Tuning Condenser	27-4336	.02
	Shadowmeter Lamp Shield	28-2917	.02
	Mtg. Plate R. F. Transformer	28-3908	.02
	Mtg. Spacer R. F. Transformer	27-8328	.01
	Mtg. Screw R. F. Transformer	W-1635	Per C .30
	Shaft Volume Control	38-8060	.12
	Clip Retaining	28-4394	.03
	Spring	28-4117	Per C .40
	Cable Speaker	41-3202	
	Cord A. C.	L-2183	.40
	Insulator Electrolytic Condenser	27-7194	.01
	Vernier Drive Tuning Condenser		
	I. F. Shield	38-7984	
	Shadowmeter Mtg. Spring	28-8823	Per C .70
	Knob Tuning	27-4330	.10
	Knob Tuning Vernier	27-4331	.10
	Knob Tone Volume	27-4332	.10
	Knob Range Switch	27-4326	.10
	Terminal Cover Speaker	38-3672	
	"B" CABINET		
	Speaker K-35	36-1231	7.25
	Screw Chassis Mtg.		
	Washer Chassis Mtg.	28-2069	Per C .30
	Bezel Frame & Plate Assembly	40-5945	
	Glass	27-8299	.06
	Ring	28-3927	.40
	Gasket	27-8312	.01
	"X" CABINET		
	Speaker H-26	36-1233	8.25
	Bezel Frame & Plate Assembly	40-5937	
	Glass	27-8300	.06
	Ring	28-3988	.45
	Gasket	27-8313	.01
	Screws	W-1644	Per C .50
	Bottom Shield Plate	28-4031	.45
	Snap Fastener	28-4279	
	Screw Speaker Mtg.	W-1695	
	Nut	W-124	Per C .35
	Washer	W-291	Per C .40
	Screw (Chassis Mtg.)	W-1494	
	Rubber (Chassis Mtg.)	3568	
	Washer	28-2089	Per C .40

Figures in black type indicate circled figures in Base View.

Price Subject to Change without Notice

©John F. Rider Publisher

PHILCO RADIO & TELEV. CORP.

MODEL 37-660
Schematic
Coil Data

Fig. 2—Schematic Diagram

Model 37-660

July, 1936

Electrical Specifications

Power Supply: 115 V.
Frequency: 50-60 cycle.
For 25 to 40 cycle operation, use the Power transformer marked with asterisk in the parts list.
Consumption: 130 Watts.
Intermediate Frequency: 470 K. C.

Output: 10 Watts.
Philco Tubes: 6K7G—R.F. Amplifier; 6A8G—Oscillator and first detector; 6K7G—I.F. Amplifier; 6J5G—2nd detector, A.V.C.; 6K5G—1st Audio; 6J5G Phase Inverter; 2-6F6G—Output; 5Y4G—Rectifier.
Tuning Ranges: Range 1—5.30 to 1720 K. C.; Range 2—2.3 to 7.4 M. C.; Range 3—7.35 to 11.6 M. C.; Range 4—11.5 to 18.2 M. C.
Speakers: X cabinet—H-27; B cabinet—K-36.

MODEL 37-660

PHILCO RADIO & TELEV. CORP.

Trimmers
Alignment

The following procedure must be observed in adjusting the compensators:

DIAL CALIBRATION—In order to adjust this receiver correctly, the dial must be aligned to track properly with the tuning condenser. To do this rotate the tuning control to the extreme counter-clockwise position (maximum capacity). Loosen the set screw of the dial hub, then turn dial until the glowing indicator is centered between the first and second index lines of dial scale (see Fig. 4). Now tighten the dial hub set screw in this position.

SHADOW METER ADJUSTMENT—Remove aerial and allow tubes to warm up. Then adjust shadow meter as follows:

1. Move the shadow meter coil backwards and forwards, until the opposite edges of the shadow are 1/8 of an inch from each end of the shadow screen, measuring along the bottom edge of the screen. Adjustment of the shadow meter light bracket may be necessary for perfect centering.
2. Remove the rectifier tube from its socket, and rotate coil until shadow reaches minimum width. This width must not exceed 1/32 of an inch.
3. Replace the 5X4G rectifier tube in its socket. The shadow should then widen to not more than 1/4 inch or less than 1/8 inch from each side of the screen measuring along the bottom edge. If these limits are not obtained readjust the shadow meter as given in paragraphs 1 and 2 until they are reached.

OUTPUT METER—The 025 Output Meter is connected between the plate and cathode prongs of one of the 6F6G tubes. The meter is adjusted to use the (0-30) volt scale.

INTERMEDIATE FREQUENCY CIRCUIT

Frequency 470 K. C.

1. Connect the 088 Signal Generator output lead through a .1 mfd. condenser to the control grid of the 6A8G tube and the ground connection of the output lead to the chassis. Turn the Volume Control to maximum volume position.
2. Set the range switch in position No. 1 (Broadcast), then rotate the tuning condenser of the receiver to approximately 580 K. C. and adjust the signal generator for 470 K. C.
3. Adjust compensators ⑰s 2nd I.F. sec., ⑰p 2nd I.F. Pri., ⑱s 1st I.F. Sec. and ⑱p 1st I.F. Pri. for maximum reading on the output meter.

RADIO FREQUENCY CIRCUIT

Tuning Range—11.5 to 18.2 M. C.

1. Remove the signal generator output lead from the grid of the 6A8G tube and connect it with the .1 mfd. condenser to terminal No. 1 on aerial input panel and the generator ground lead to terminal No. 3, rear of chassis. Terminals 2 and 3 must be connected with the shorting link provided on the panel.
2. Set the range switch in position 4. Turn the receiver and signal generator dials to 18 M. C. Now adjust compensator ⑲b by turning the screw (clockwise) to the maximum capacity position, then slowly turning it (counter-clockwise) until a second peak signal is reached on the output meter. The first peak from maximum capacity is the image signal and must not be used. NOTE—In adjusting some receivers only one peak will be observed, therefore, tune the compensator to maximum on this peak. If the above procedure is correctly performed, the image signal will be found at 17.06 M. C., by advancing signal generator attenuator and turning receiver dial to this frequency mark on the dial.
3. The antenna and R.F. compensators ⑥b and ⑰b are now adjusted by connecting a variable condenser of approximately 350 mmfd.—having a good vernier drive—across the oscillator compensator ⑲b contact (first contact from left side of the receiver facing rear underside view of chassis) and ground. Leaving the signal generator and receiver dials at 18 M. C., tune the added condenser from the maximum capacity point until the second harmonic of the receiver oscillator beats against the signal from the generator thereby bringing in the signal. The antenna and R.F. compensators ⑥b and ⑰b are then adjusted for maximum output. Now remove the external condenser and readjust compensator ⑲b as given in paragraph 2 above.
4. Turn signal generator and receiver dials to 12 M. C. and adjust compensator ⑲c for maximum output. Then adjust compensators ⑰c and ⑥c for maximum output.
5. Now turn signal generator and receiver dials to 18 M. C. and readjust compensators ⑲b Osc., ⑥b Ant. and ⑰b R.F. as given in paragraphs 2 and 3 above.

Tuning Range (7.35) to (11.6) M. C.

1. Set range switch in position 3. Rotate signal generator and receiver dials to 11 M. C. Now adjust compensator ⑲ by turning the screw (clockwise) to the maximum capacity position, then slowly turn it (counter-clockwise) until a second peak signal is reached on the output meter. The first peak from maximum capacity is the image signal and must not be used. NOTE—In adjusting some receivers only one peak will be observed, therefore, tune the compensator to maximum on this peak. If the above procedure is correctly performed, the image signal will be found at 10.06 M. C. by advancing the signal generator attenuator and turning receiver dial to this frequency mark on the dial.
2. Using the 11 M. C. signal, compensators ⑰ R.F. and ⑥ Ant. are adjusted by using the procedure given in paragraph 3, under tuning range (11.5) to (18.2) M. C., with the exception, that the external condenser is connected from compensator ⑲ contact to ground. This contact is the third one from left side of the receiver facing rear underside view of chassis. Also use a 11 M. C. signal.
3. Readjust compensator ⑲ Osc. as given in paragraph 1 above.
4. Turn signal generator and receiver dial to 7.5 M. C. and adjust compensators ⑳a Osc. series ⑰a R.F. and ⑥a Ant. for maximum output.
5. Due to the slight interaction of the high and low frequency compensators of this range, compensators ⑲ osc., ⑰ R.F. and ⑥ Ant. are readjusted using procedure in paragraphs 1 and 2 above.

Tuning Range 2.3 to 7.4 M. C.

1. Set range switch in Position 2. Turn signal generator and receiver dials to 7.0 M. C. Now adjust compensators ⑲b Osc., ⑯a R.F. and ⑥a Ant. for maximum output.
2. Turn signal generator and receiver dials to 2.35 M. C. Compensator ⑲c is now adjusted for maximum as follows:

First tune compensator ⑲c for maximum output. Then vary the tuning condenser for maximum output about the 2.35 dial mark. Now retune compensator ⑲c, and again vary the tuning condensers back and forth about the 2.35 dial mark for maximum output. This operation of first tuning the compensator, then the tuning condenser is continued until maximum output is obtained at or about the 2.35 dial mark.

If the signal generator is not accurately calibrated the maximum point on the dial of the receiver may fall slightly above or below the dial mark.

3. Turn the signal generator and receiver dials to 7.0 M. C. and readjust compensator ⑲b for maximum output. Then turn signal generator and receiver dials to 6.0 M. C. and adjust compensators ⑯a R.F. and ⑥a Ant. for maximum output.

Tuning Range 530 to 1720 K. C.

1. Set range switch in position No. 1 (Broadcast). Rotate signal generator and receiver dials to 1600 K. C. Now adjust compensators ⑲ Osc., ⑰ R.F. and ⑥ Ant. for maximum output.
2. Tune signal generator and receiver dials to 580 K. C. Compensator ⑳a Osc. series is then adjusted for maximum output as given in paragraph 2 under tuning range 2.3 to 7.4 M. C., the only difference in the procedure being in the frequency used.
3. Readjust compensator ⑲ for maximum output, by turning signal generator and receiver dials to 1600 K. C.
4. Turn signal generator and receiver dials to 1500 K. C. and adjust compensators ⑯ R.F. and ⑥ Ant. for maximum output.

Alignment of Compensators

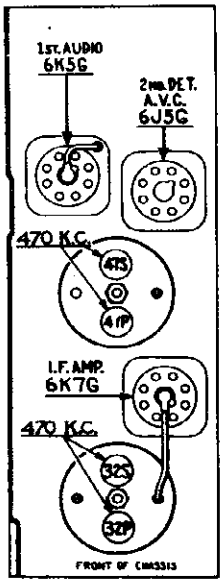

Fig. 5—Locations of I.F. Compensators Top of Chassis

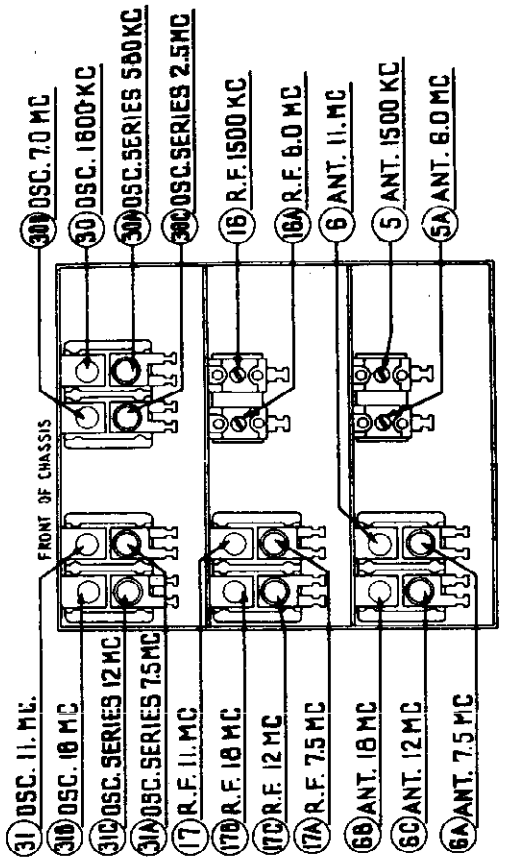

Fig. 6—Locations of R.F. Compensators Underside of Chassis

©John F. Rider, Publisher

MODEL 37-660
Voltage, Socket
Notes

PHILCO RADIO & TELEV. CORP.

SERVICE DATA

Model 37-660 is a 9 tube superheterodyne receiver designed for operation on alternating current. It has four tuning ranges, covering standard broadcast and short-wave frequencies. The chassis is constructed in four basic assembly units, concentrating the R.F., I.F., Audio and Power circuits in individual units.

The circuit includes the PHILCO Foreign Tuning System—controlled by the range switch—providing maximum sensitivity and noise-reduction, when used with the Philco High-Efficiency Aerial; automatic bass compensation in the volume control circuit; shadow tuning; automatic volume control, and a push-pull pentode output circuit.

AERIAL CONNECTIONS

The red and black leads of the High-Efficiency Aerial "transmission line" are connected to terminals 1 and 2 respectively, of the terminal panel provided on the rear of the chassis. Connect the jumper on the terminal panel across terminals 3 and 4.

If a temporary aerial is used, the jumper should be across terminals 2 and 3. The aerial connects to terminal 1 and the ground lead to terminal 3. A good ground connection is desirable in all installations.

REPLACING DIAL

To replace the dial, remove the clamp holding the dial to the hub, by turning clamp counter-clockwise, using the two holes provided on the clamp for this purpose.

REMOVING MASK ARM & LINK ASSEMBLY

First remove dial, then loosen set screw of dial hub and remove the hub and felt washer from the shaft. Now loosen screws holding indicator bracket and lens assembly, and move bracket forward about ½ inch. The assembly may now be removed by loosening set screw of range switch arm, then pull arm off of range switch shaft.

REMOVING SWITCH & COIL ASSEMBLIES OF R.F. UNIT

To replace any part in the switch and coil assemblies of the R.F. Unit, each assembly can be removed separately as follows:

First remove the tuning dial, mask and arm assembly. Remove the center mounting screw on the rear of the R.F. Unit. Then lift the rear of the unit and push forward until the rubber mounting grommets, on each side of the unit, clear the mounting slots. The unit is then lifted far enough from the chassis for removal of the two screws holding the selector switch indexing plate and shaft (front of unit). Then pull shaft straight out from the unit. Also, remove the volume control shaft by releasing the retaining clip, inside the chassis, from the shaft.

IMPORTANT—When selector switch shaft is replaced, care should be taken to have all wafer rotors in the same position, so that the key on the switch shaft will slide freely into the notched hole in each wafer rotor. NEVER force shaft into rotors.

Servicing Stages—It is necessary to unsolder some connecting leads in order to release the stage for servicing. If all the following connections are unfastened the stage will be entirely released. Ordinarily only one or two leads need be loosened in order to change coils, replace coupling condensers, or replace switch sections.

ANTENNA ASSEMBLY—Rear Section

1. Unsolder the wires which connect the antenna panel and I.F. Unit to the range switch and assembly shield plate ground leads.

2. Unsolder the two leads from the gang condenser terminal panel which connect to the range switch. Also lead of tubular condenser (7) at the ground lug on the R.F. Unit.

3. Remove screw holding shield plate to the unit base. This screw is located in the right hand corner of the shield plate, facing the rear underside of the chassis. The assembly can then be removed.

R.F. ASSEMBLY—Middle Section

1. Unsolder the wires from the I.F. Unit and the 6K7G plate contact in R.F. Unit which connects to the range switch. Then remove ground leads of shield plate.

2. Unsolder the leads from the gang condenser terminal panels and the lead of tubular condenser (18) at the ground lug on R.F. Unit base.

3. Remove the screw holding shield plate to the unit base. This screw is located in the right hand corner of the shield plate facing the rear underside of the chassis. Then pull assembly straight out.

OSCILLATOR ASSEMBLY—Front Section

1. The oscillator assembly can be removed by unscrewing the two screws located on each side of the R.F. Unit.

2. Unsolder the wires connecting range switch to bakelite condenser (78) in the power unit, electrolytic condenser (21) in the R.F. Unit and OSC plate contact on the 6A8G socket.

3. Remove the leads from the gang condenser terminal panels and the lead of Mica condenser (24) at the ground lug on R.F. Unit base.

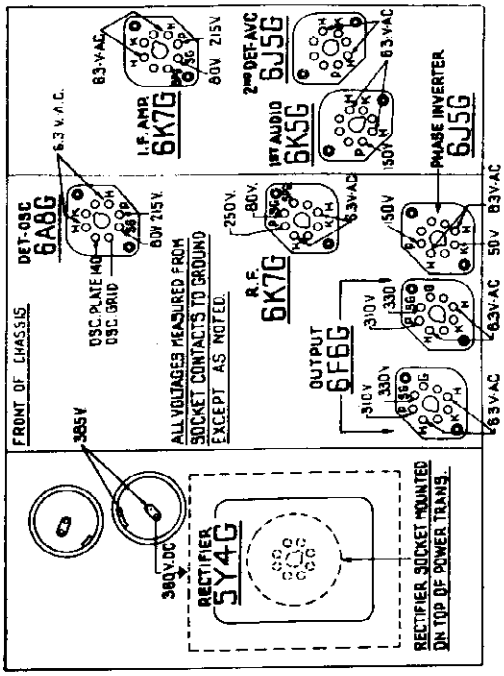

Fig. 1—Socket Voltages—Underside of Chassis View

The voltages indicated by arrows were measured with a Philco 025 Circuit Tester which contains a voltmeter having a resistance of 1000 ohms per volt. Volume Control at minimum, range switch in broadcast position, line voltage 115 A. C.

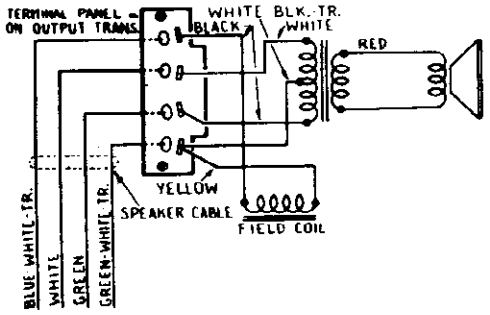

Speaker Wiring for Types K-36 and H-27

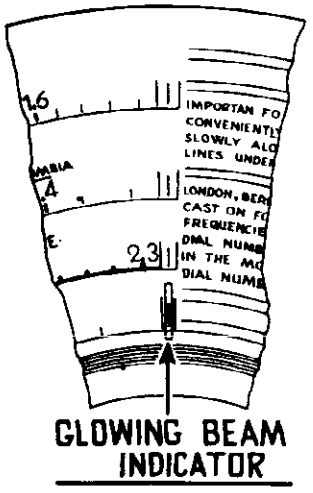

Fig. 4—Dial Calibration

©John F. Rider, Publisher

MODEL 37-660
Chassis Views
Parts List

PHILCO RADIO & TELEV. CORP.

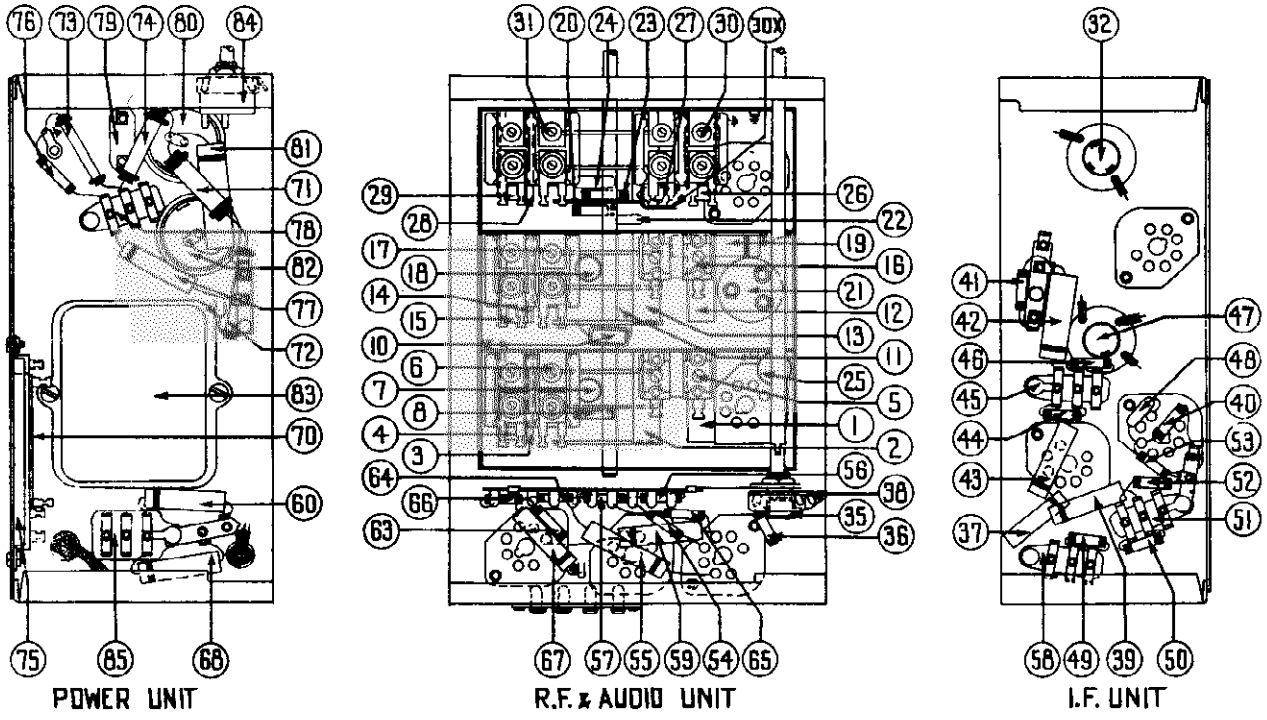

Fig. 3—Parts Locations—Underside View of Chassis.

Replacement Parts—Model 37-660

Schem. No.	Description	Part No.	List Price
1	Antenna Transformer (530 to 1720 K.C.)	32-2106	$0.80
2	Antenna Transformer (2.3 to 7.4 M.C.)	32-2119	.65
3	Antenna Transformer (7.35 to 11.6 M.C.)	32-2185	.70
4	Antenna Transformer (11.5 to 18.2 M.C.)	32-2175	.80
5	Compensator (Two sections) brown dot	31-6120	
6	Compensator (Four sections) brown dot	31-6105	
7	Condenser (.05 mfd. tubular)	30-4020	.20
8	Resistor (51000 ohms, ½ watt)	33-351339	.20
9	Tuning Condenser	31-1855	4.50
10	Condenser (40 mmfd. mica)	30-1076	.20
11	Condenser twisted wire & lugs		
12	R.F. Transformer (530 to 1720 K.C.)	32-2105	.75
13	R.F. Transformer (2.3 to 7.4 M.C.)	32-2106	.65
14	R.F. Transformer (7.3 to 11.6 M.C.)	32-2178	.60
15	R.F. Transformer (11.5 to 18.2 M.C.)	32-2176	.70
16	Compensator (Two sections) brown dot	31-6120	
17	Compensator (Four sections) red dot	31-6106	
18	Condenser (.05 mfd. tubular)	30-4020	.20
19	Condenser (.05 mfd. tubular)	30-4123	.20
20	Resistor (10000 ohms, ½ watt)	33-310339	.20
21	Electrolytic Condenser (three sections 1, 2, 3 mfd.)	30-2122	1.85
22	Condenser (250 mmfd. mica)	30-1032	.25
23	Resistor (32000 ohms, ½ watt)	33-332339	.20
24	Condenser (.003 mfd. mica)	30-1028	.45
25	Condenser (.05 mfd. tubular)	30-4123	.20
26	Oscillator Transformer (530 to 1720 K.C.)	32-2120	.65
27	Oscillator Transformer (2.3 to 7.4 M.C.)	32-2121	.40
28	Oscillator Transformer (7.3 to 11.6 M.C.)	32-2186	.70
29	Oscillator Transformer (11.5 to 18.2 M.C.)	32-2182	.70
30	Compensator (Four sections) yellow dot	31-6108	
30x	Condenser (1150 mmf)	29-1091	
31	Compensator (Four sections) brown dot	31-6105	
32	1st I.F. Transformer	32-2180	
33	Pilot Lamp Shadowmeter	34-2039	.15
34	Shadowmeter	45-2189	2.50
35	Condenser (75 mmfd. mica)	30-1053	.20
36	Resistor (51000 ohms, ½ watt)	33-351339	.20
37	Condenser (.006 mfd. tubular)	30-4123	.20
38	Volume Control	33-5158	1.00
39	Condenser (.015 mfd. tubular)	30-4358	.20
40	Resistor (1 megohm, ½ watt)	33-510339	.20
41	Resistor (1000 ohms, ½ watt)	33-210339	.20
42	Condenser (.1 mfd. tubular)	30-4170	.25
43	Condenser (.01 mfd. tubular)	30-4124	.25
44	Resistor (490000 ohms, ½ watt)	33-449339	.20
45	Condenser (110 mmfd. twin bakelite)	8035-DG	.25
46	Resistor (99000 ohms, ½ watt)	33-399339	$0.20
47	2nd I.F. Transformer	32-2171	
48	Condenser (110 mmfd. mica)	30-1031	.20
49	Resistor (99000 ohms, ½ watt)	33-399339	.20
50	Resistor (1 megohm, ½ watt)	33-510339	.30
51	Condenser (.1 mfd. bakelite)	4989-SG	.35
52	Resistor (490000 ohms, ½ watt)	33-449339	.20
53	Resistor (1 megohm, ½ watt)	33-510339	.30
54	Resistor (45000 ohm, ½ watt)	33-345339	.20
55	Condenser (.03 mfd. tubular)	30-4380	.20
56	Resistor (5000 ohms, ½ watt)	33-250339	.20
57	Resistor (490000 ohms, ½ watt)	33-449339	.20
58	Condenser (.03 mfd. bakelite)	8318-SU	.35
59	Condenser (.03 mfd. tubular)	30-4380	.20
60	Condenser (.003 mfd. tubular)	30-4469	
61	Cone & Voice Coil (H-27)	02625	1.20
	Cone & Voice Coil (K-36)	36-2020	
62	Output Transformer (H-27, K-36)	32-7634	1.50
63	Resistor (330000 ohms, ½ watt)	33-433339	.20
64	Resistor (330000 ohms, ½ watt)	33-433339	.20
65	Resistor (51000 ohms, ½ watt)	33-351339	.20
66	Resistor (490000 ohms, ½ watt)	33-449339	.20
67	Condenser (.05 mfd. tubular)	30-4444	.20
68	Condenser (.003 mfd. tubular)	30-4469	
69	Field Coil (H-27, K-36)	36-3673	
70	Resistor (7750 ohms, wirewound)	33-3279	
71	Resistor (32000 ohms, 2 watts)	33-332539	
72	Resistor (40000 ohms, 1 watt)	33-340339	
73	Resistor (70000 ohms, 1 watt)	33-370439	.20
74	Resistor (20000 ohms, 2 watt)	33-320539	
75	Bias Resistor (Wirewound)	33-3278	
76	Resistor (1 megohm, ½ watt)	33-510339	.20
77	Condenser (.008 mfd. tubular)	30-4112	.20
78	Condenser (.006 mfd. bakelite)	7625-SU	.25
79	Filter Choke	32-7115	1.80
80	Electrolytic Condenser 8 uf.	30-2026	1.05
81	Condenser (.2 mfd. tubular)	30-4455	
82	Electrolytic Condenser 8 uf.	30-2026	1.05
83	Power Transformer (115 V., 50-60 Cycles)	32-7615	
*	Power Transformer (115 V., 25-40 Cycles)	32-7616	
84	Tone Control & AC Switch	42-1184	.75
86	Condenser (.015 Twin Bakelite)	3793-DG	.40
86	Antenna Range Switch	42-1202	1.50
87	R.F. Range Switch	42-1203	1.50
88	Oscillator Range Switch	42-1204	1.50
	Switch Indexing Plate & Shaft	42-1186	
	Dial	27-5209	.55
	Hub	28-7187	.12
	Clamp	28-2837	.10
	Screw Set	W-1641	
	Dial Gear	28-7185	$0.10
	Drive Gear	31-1884	.25
	Thrust Spring	28-8611	.01
	Thrust Washer	28-3976	.30 C
	C Washer	28-3904	.01
	Vernier Drive Assem.	31-1871	
	Mask	27-5240	
	Mask Arm & Link Assembly	31-1867	
	Mask Washer	27-8318	.50 C
	Mask Guide Bracket	38-7876	
	Screen & Lens Holder Assembly	31-1900	
	Pilot Lamp Assembly	38-7706	.35
	Shadow Meter Lamp Shield	28-2917	.02
	Shadow Meter Mtg. Spring	28-8623	.70 C
	Socket, 7 Prong	27-6057	.11
	Socket, 9 Prong	27-6052	
	Tube Shield	29-2726	.10
	Tube Shield Base	29-3898	.03
	Volume Control Shaft	28-6500	.12
	Retaining Clips	28-8610	.03
	Washer (Volume Control)	28-4186	.75 C
	Washer Volume Control (Spring)	4436	1.50 C
	Spring	28-4117	.40 C
	Grommet Mtg. R.F. Unit	27-4317	.04
	Sleeve Mtg. R.F. Unit	28-2287	.01
	Screw Mtg. R.F. Unit	W-729	.45 C
	Washer	28-3927	.01
	Mtg. Rubber Tuning Condenser	27-4325	.02
	Speaker Cable	41-3202	
	A. C. Cord	L-2183	.40
	Terminal Panel Ant.	38-7714	.15
	Knob Assembly	27-4330	.10
	Knob Assembly	27-4331	.10
	Knob Assembly	27-4332	.10
	Knob Assembly	27-4326	.10
	"S" CABINET		
	Speaker K-36	36-1223	
	Bezel Frame & Plate Assembly	40-8046	
	Gasket	27-8312	.01
	Glass	27-8309	.06
	Ring	28-3967	.40
	"X" CABINET		
	Speaker H-27	36-1240	
	Screw Mtg. Speaker	W-709	
	Bezel Frame & Plate Assembly	40-8048	
	Glass	27-8300	.06
	Ring	28-3968	.45
	Gasket	27-8313	.01
	Bottom Shield Plate	28-4031	.45

Figures in black type indicate circled figures in Base View.

Prices Subject to Change without Notice

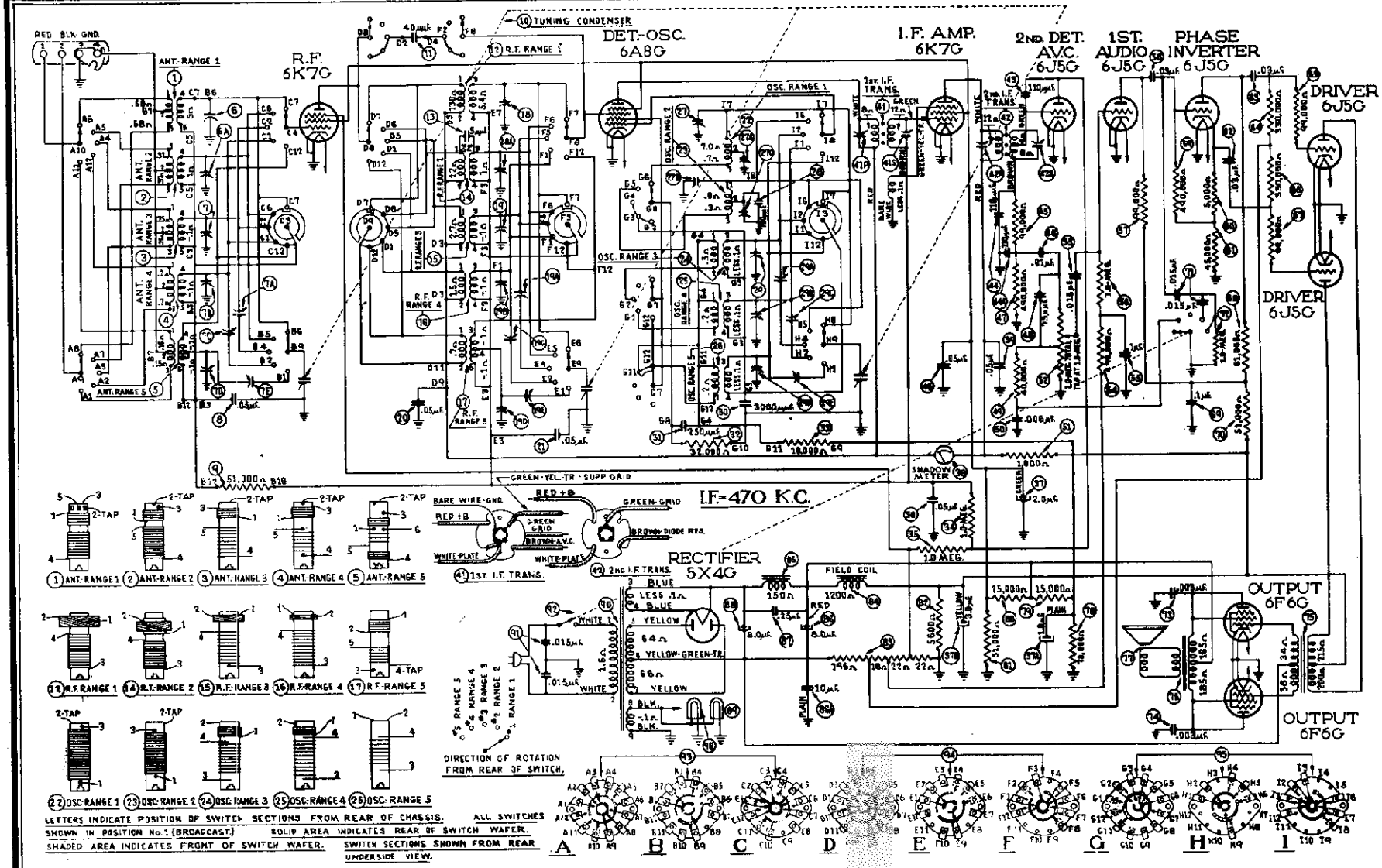

Fig. 3—Schematic Diagram 37-670

September, 1936

Electrical Specifications

POWER SUPPLY:

Voltage	Frequency	Power Consumption
115	50–60	130 watts
115	25–40	130 watts
220		

Power transformers for the different voltage and frequency ratings are listed in the Parts List, page 3.

Intermediate Frequency: 470 K. C.

Audio Output: 10 watts

Philco Tubes Used: 6K7G, R.F. Amplifier; 6A8G, Oscillator and First Detector; 6K7G, I.F. Amplifier; 6J5G, 2nd Detector, A.V.C.; 6J5G, First Audio; 6J5G, Phase Inverter; 2-6J5G, Push-Pull Drivers; 2-6F6G, Output; 5X4G, Rectifier.

Tuning Ranges: Five. Range 1—530-1600 K. C.; Range 2—1.58 to 4.75 M. C.; Range 3—4.7 to 7.4 M. C.; Range 4—7.35 to 11.6 M. C.; Range 5—11.5 to 18.2 M. C.

Speakers: "X" Cabinet, H-28; "B" Cabinet, K-37.

Alignment of Compensators

The locations of the various compensators are shown in Figs. 6 and 7.

The following procedure must be observed in adjusting the compensators:

DIAL CALIBRATION—In order to adjust this receiver correctly, the dial must be aligned to track properly with the tuning condenser. To do this rotate the tuning control to the extreme counter-clockwise position (maximum capacity). Loosen the set screw of the dial hub, then turn dial until the glowing indicator is centered on second index line of dial scale (see Fig. 5). Now tighten the dial hub set screw in this position.

SHADOW METER ADJUSTMENT—Remove aerial and allow tubes to warm up. Then adjust the shadow meter as follows:

1. Move the shadow meter coil backwards and forwards, until the opposite edges of the shadow are 1/8 of an inch from each end of the shadow screen, measuring along the bottom edge of the screen. Adjustment of the shadow meter light bracket may be necessary for perfect centering.
2. Remove the 5X4G rectifier tube from its socket and rotate coil until shadow reaches minimum width. This width must not exceed 1/16 of an inch.
3. Replace the 5X4G rectifier tube in its socket. The shadow should then widen until it is not more than 1/8 inch or less than 1/16 inch from each side of the screen, measuring along the bottom edge. If these limits are not obtained readjust the shadow meter as given in paragraphs 1 and 2 until they are reached.

OUTPUT METER—The 025 Output Meter is connected between the plate and cathode prongs of one of the (6F6G) tubes. The meter is adjusted to use the (0-30) volt scale.

INTERMEDIATE FREQUENCY CIRCUIT

Frequency 470 K. C.

1. Connect the 088 Signal Generator output lead through a .1 mfd. condenser to the control grid of the 6A8G tube, and the ground connection of the output lead to the chassis. Turn the Volume Control to maximum volume position.
2. Set the range switch in position No. 1 (Broadcast), then rotate the tuning condenser of the receiver to approximately 580 K. C. and adjust the signal generator for 470 K. C.
3. Adjust compensators (42S) 2nd I.F. Sec., (42P) 2nd I.F. Pri., (41S) 1st I.F. Sec., and (41P) 1st I.F. Pri. for maximum reading on the output meter.

RADIO FREQUENCY CIRCUIT

Tuning Range (11.5) to (18.2) M. C.

1. Remove the signal generator output lead from the grid of the 6A8G tube and connect it through the .1 mfd. condenser to terminal No. 1 on aerial input panel and the generator ground lead to terminal No. 3, rear of chassis. Terminals 2 and 3 must be connected by the shorting link provided on the panel.
2. Set the range switch in position No. 5. Turn the receiver and signal generator dials to 18 M. C. Now adjust compensator (29D) by turning the screw (clockwise) to the maximum capacity position, then slowly turning it (counter-clockwise) until a second peak signal is reached on the output meter. The first peak from maximum capacity is the image signal and must not be used. NOTE—In adjusting some receivers only one peak will be observed, therefore, tune the compensator to maximum on this peak. If the above procedure is correctly performed, the image signal will be found at 17.06 M. C. by advancing the signal generator attenuator and turning the receiver dial to this frequency mark on the dial.
3. The antenna and R.F. compensators (7D) and (19D) are now adjusted by connecting a variable condenser of approximately 350 mmfd.—Philco Part No. 45-2325 across the oscillator compensator (29D) (First contact from left side of the receiver facing rear underside of chassis) and ground. Leaving the signal generator and receiver dials at 18 M. C., tune the added condenser from the maximum capacity point until the second harmonic of the receiver oscillator beats against the signal from the generator thereby bringing in the signal. The antenna and R. F. compensators (7D) and (19D) are then adjusted for maximum output. Now remove the external condenser and readjust compensator (29D) as given in paragraph 2 above.
4. Turn signal generator and receiver dials to 12 M. C. and adjust compensator (29E) for maximum output. Then adjust compensators (19E) and (7E) for maximum output.
5. Now turn the signal generator and receiver dials to 18 M. C. and readjust compensators (29D) Osc., (7D) Ant. and (19D) R.F. as given in paragraphs 2 and 3 above.

Tuning Range (7.35) to (11.5) M. C.

1. Set range switch in position 4. Rotate signal generator and receiver dials to 11 M. C. Now adjust compensator (29S) by turning the screw (clockwise) to the maximum capacity position, then slowly turn it (counter-clockwise) until a second peak signal is reached on the output meter. The first peak from maximum capacity is the image signal and must not be used. NOTE—In adjusting some receivers only one peak will be observed, therefore, tune the compensator to maximum on this peak. If the above procedure is correctly performed, the image signal will be found at 10.06 M. C. by advancing the signal generator attenuator and turning receiver dial to this frequency mark on the dial.
2. Using the 11 M. C. signal, compensators (19S) R.F. and (7S) Ant. are adjusted by using the procedure given in paragraph 3, under tuning range (11.5) to (18.2) M. C. with the exception that the external condenser is connected across compensator (29S) (Third contact from left side of the receiver) and ground.
3. Remove the variable condenser and readjust compensator (29S) Osc. as given in paragraph 1 above.
4. Turn the signal generator and receiver dials to 7.5 M. C. and adjust compensators (29C) Osc. series, (19C) R.F. and (7C) Ant. for maximum output.
5. Due to the slight interaction of the high and low frequency compensators of this range, compensators (29S) Osc., (19S) R.F. and (7S) Ant. must be readjusted using the procedure in paragraphs 1 and 2 above.

Tuning Range (4.7) to (7.4) M. C.

1. Set range switch in Position 3. Turn signal generator and receiver dials to 7.0 M. C. Now adjust compensator (29) Osc., (19) R.F. and (7) Ant. for maximum output.
2. Turn the signal generator and receiver dials to 5.0 M.C. and adjust compensators (29A), (19A) and (7A) for maximum output.
3. Turn the signal generator and receiver dials to 7.0 M. C. and readjust compensators (29) Osc., (19) R.F. and (7) Ant. for maximum output.

Tuning Range (1.58) to (4.75) M. C.

1. Set the range switch in position 2. Turn the signal generator and receiver dials to 4.5 M. C
2. Now adjust compensators (27B) Osc., (13A) R.F. and (6A) Ant. for maximum output.
3. Rotate the signal generator and receiver dials to 1.7 M. C. Compensator (27C) Osc. series is now adjusted for maximum output as follows:

First tune compensator (27C) for maximum output, then vary the tuning condenser of the receiver for maximum output about the 1.7 M. C. dial mark. Now turn compensator (27C) slightly to the right or left and vary the receiver tuning condenser for maximum output. If the output reading increases, turn compensator (27C) in the same direction a trifle more, and again vary the tuning condenser for maximum output. If the output decreases, set the compensator in the opposite direction. This procedure of first setting the compensator and then varying the tuning condenser is continued until there is no further gain in output reading.

4. Turn signal generator and receiver dials to 4.5 M. C. and readjust compensators (27B), (13A) and (6A) as given in Paragraphs 1 and 2 above.

Tuning Range (530) to (1600) K. C.

1. Set range switch in position No. 1 (Broadcast). Rotate the signal generator and receiver dials to 1500 K. C. Now adjust compensators (27) Osc., (13) R.F. and (6) Ant. for maximum output.
2. Tune signal generator and receiver dials to 580 K. C. Compensator (27A) Osc. series is then adjusted for maximum output as given in paragraph 3 under tuning range (1.58) to (4.75) M. C., the only difference in the procedure being in the frequency used.
3. Readjust compensator (27) for maximum output, by turning the signal generator and receiver dials to 1500 K. C.
4. Turn the signal generator and receiver dials to 1400 K. C. and adjust compensators (13) R.F. and (6) Ant. for maximum output.

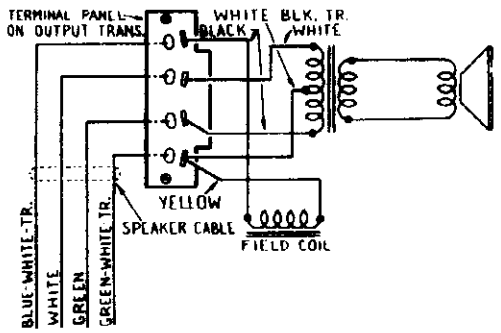

Fig. 1—Speaker Wiring for Types K-37 and H-28

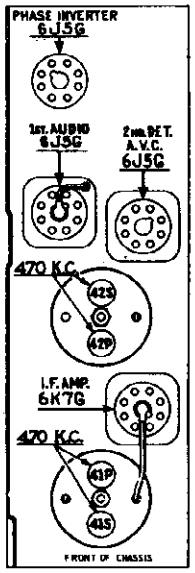

Fig. 6—I.F. Compensators Top of Chassis

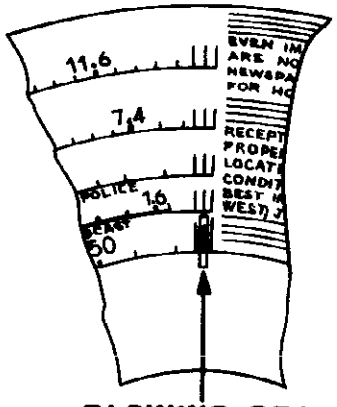

Fig. 5—Dial Calibration

©John F. Rider, Publisher

PHILCO RADIO & TELEV. CORP.

MODEL 37-670
Trimmers, Voltage
Socket, Data

SERVICE DATA

Model 37-670 is an 11 tube superheterodyne receiver designed for operation on alternating current. It has five tuning ranges, covering standard broadcast and short-wave frequencies. The chassis is constructed in four basic assembly units, concentrating the R.F., I.F., Audio and Power circuits in individual units.

The circuit includes the PHILCO Foreign Tuning System—controlled by the range switch—providing maximum sensitivity and noise-reduction, when used with the Philco High-Efficiency Aerial; automatic bass compensation in the volume control circuit; shadow tuning; automatic volume control, and a push-pull class "A" output circuit.

AERIAL CONNECTIONS

The red and black leads of the High-Efficiency Aerial "transmission line" are connected to terminals 1 and 2 respectively, of the terminal panel provided on the rear of the chassis. Connect the jumper on the terminal panel across terminals 3 and 4.

If a temporary aerial is used, the jumper should be across terminals 2 and 3. The aerial connects to terminal 1 and the ground lead to terminal 3. A good ground connection is desirable in all installations.

REPLACING DIAL

To replace the dial, remove the clamp holding the dial to the hub, by turning clamp counter-clockwise, using the two holes provided on the clamp for this purpose.

REMOVING MASK ARM & LINK ASSEMBLY

First remove dial, then loosen set screw of dial hub and remove the hub and felt washer from the shaft. Now loosen screws holding indicator bracket and lens assembly, and move bracket forward about ½ inch. The assembly may now be removed by loosening set screw of range switch arm, then pulling arm off of range switch shaft.

REMOVING SWITCH & COIL ASSEMBLIES OF R.F. UNIT

To replace any part in the switch and coil assemblies of the R.F. Unit, each assembly can be removed separately as follows:

First remove the tuning dial, mask and arm assembly. Remove the center mounting screw on the rear of the R.F. Unit. Then lift the rear of the unit and push forward until the rubber mounting grommets, on each side of the unit, clear the mounting slots. The unit is then lifted far enough from the chassis for removal of the two screws holding the selector switch indexing plate and shaft (front of unit). Then pull shaft straight out from the unit. Also, remove the volume control shaft by releasing the retaining clip, inside the chassis, from the shaft.

IMPORTANT—When selector switch shaft is replaced, care should be taken to have all wafer rotors in the same position, so that the key on the switch shaft will slide freely into the notched hole in each wafer rotor. **NEVER** force shaft into rotors.

Servicing Stages—It is necessary to unsolder some connecting leads in order to release the stage for servicing. If all the following connections are unfastened the stage will be entirely released. Ordinarily only one or two leads need be loosened in order to change coils, replace coupling condensers, or replace switch sections.

ANTENNA ASSEMBLY—Rear Section

1. Unsolder the wires which connect the antenna panel and I.F. Unit to the range switch, also the assembly shield ground leads.
2. Unsolder the two leads from the gang condenser terminal panel which connect to the range switch. Also the lead of tubular condenser (**40**) at the ground lug on the R.F. Unit.
3. Remove the screw holding the shield plate to the unit base. This screw is located in the right hand corner of the shield plate, facing the rear underside of the chassis. The assembly can then be removed.

R.F. ASSEMBLY—Middle Section

1. Unsolder the wires from the I.F. Unit and the 6K7G plate contact in R.F. Unit which connect to the range switch. Then remove ground leads of shield plate.
2. Unsolder the leads from the gang condenser terminal panels and the lead connecting D2 on the range switch to the 6K7G Plate Contact.
3. Remove the screw holding the shield plate to the unit base. This screw is located in the right hand corner of the shield plate facing the rear underside of the chassis. Then pull the assembly straight out.

OSCILLATOR ASSEMBLY—Front Section

1. Unscrew the two screws located on each side of the R.F. Unit.
2. Unsolder the wires connecting the range switch to resistors (**81**) and (**78**) in the power unit, electrolytic condenser (**77**) in the R.F. Unit and Osc. plate and grid contacts on the 6A8G socket.
3. Remove the leads from the gang condenser terminal panels and the lead of Mica condenser (**30**) at the ground lug on R.F. Unit base. With these leads disconnected lift oscillator section from unit.

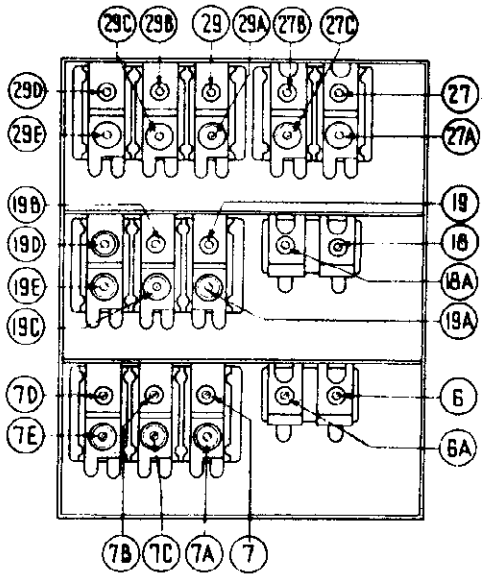

Fig. 7—R.F. Compensators Underside of Chassis

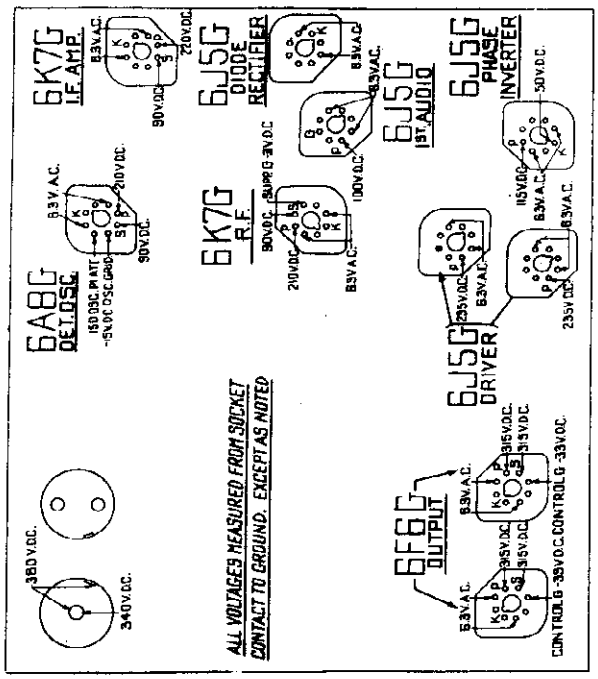

Fig. 2—Socket Voltages—Underside of Chassis View

The voltages indicated by arrows were measured with a voltmeter having a resistance of 1000 ohms per volt. Volume Control at minimum, range switch in broadcast position, line voltage 115 A.C.

©John F. Rider, Publisher

MODEL 37-670
Chassis Views
Parts List

PHILCO RADIO & TELEV. CORP.

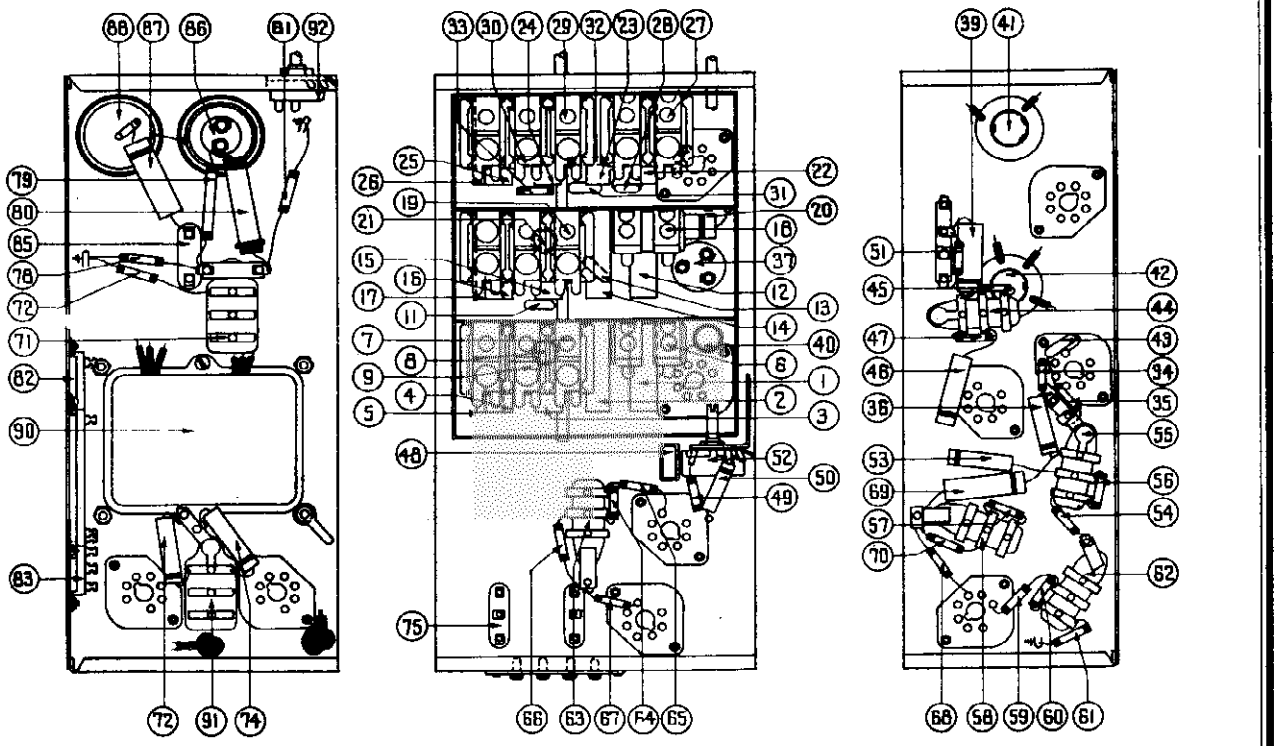

Fig. 4—Parts Location—Underside of Chassis

Replacement Parts — Model 37-670

Schem. No.	Description	Part No.	List Price
1	Antenna Transformer (530 to 1606 K.C.)	32-2106	$0.80
2	Antenna Transformer (1.58 to 4.75 M.C.)	32-2146	.80
3	Antenna Transformer (4.7 to 7.4 M.C.)	32-2183	.60
4	Antenna Transformer (7.35 to 11.6 M.C.)	32-2185	.70
5	Antenna Transformer (11.5 to 18.2 M.C.)	32-2175	.80
6	Compensator (two section)	31-6003	.40
7	Compensator (six section)	31-6112	1.40
8	Condenser (.05 mfd. tubular)	30-4020	.20
9	Resistor (51000 ohms)	33-351339	.20
10	Tuning Condenser	31-1855	4.50
11	Condenser (40 mmfd. mica)	30-1076	.20
12	R. F. Transformer (530 to 1600 K.C.)	32-2105	.75
13	Condenser (5 mmfd. mica)	30-1077	.20
14	R. F. Transformer (1.58 to 4.75 M.C.)	32-2147	.60
15	R. F. Transformer (4.7 to 7.4 M.C.)	32-2177	.60
16	R. F. Transformer (7.3 to 11.6 M.C.)	32-2178	.60
17	R. F. Transformer (11.5 to 18.2 M.C.)	32-2176	.70
18	Compensator (two section)	31-6003	.40
19	Compensator (six section)	31-6113	1.40
20	Condenser (.05 mfd. tubular)	30-4123	.20
21	Condenser (.05 mfd. tubular)	30-4020	.20
22	Oscillator Transformer (530 to 1600 K.C.)	32-2120	.65
23	Oscillator Transformer (1.58 to 4.75 M.C.)	32-2149	.60
24	Oscillator Transformer (4.7 to 7.4 M.C.)	32-2184	.60
25	Oscillator Transformer (7.3 to 11.6 M.C.)	32-2186	.70
26	Oscillator Transformer (11.6 to 18.2 M.C.)	32-2182	.70
27	Compensator (four section)	31-6108	
28	Condenser (700 mmf.)	5863	.25
29	Compensator (six section)	31-6112	
30	Condenser (3000 mmfd. mica)	30-1028	.45
31	Condenser (250 mmfd. mica)	30-1082	.25
32	Resistor (32000 ohms)	33-332339	.20
33	Resistor (10000 ohms)	33-310339	.20
34	Resistor (1.0 megohm)	33-510339	.20
35	Resistor (1.0 megohm)	33-510339	.20
36	Condenser (.05 mfd. tubular)	30-4444	.20
37	Electrolytic Condenser (2, 1, 2 mfd.)	30-2122	1.85
38	Shadowmeter	45-2189	2.50
39	Condenser (.05 mfd. tubular)	30-4012	.25
40	Condenser (.05 mfd. tubular)	30-4123	.20
41	1st I. F. Transformer	32-2170	2.00
42	2nd I. F. Transformer	32-2172	2.00
43	Condenser (110 mmfd. mica)	30-1031	.20
44	Condenser (110 mmfd. dual bakelite)	9025-DG	.25
46	Resistor (99000 ohms)	33-399339	.20
47	Condenser (.01 mfd. tubular)	30-4124	.25
47	Resistor (490000 ohms)	33-449339	.20
48	Condenser (75 mmfd. mica)	30-1053	.20
49	Resistor (40000 ohms)	33-340339	$0.20
50	Condenser (.006 mfd. tubular)	30-4125	
51	Resistor (1000 ohms)	33-210339	.20
52	Volume Control	32-5158	1.00
53	Condenser (.015 mfd. tubular)	30-4358	.20
54	Resistor (490000 ohms)	33-449339	.20
55	Condenser (.1 mfd. bakelite)	4989-SG	.35
56	Resistor (1 megohm)	33-510339	.20
57	Resistor (99000 ohms)	33-399339	.20
58	Condenser (.02 mfd. bakelite)	8318-SU	.35
59	Resistor (490000 ohms)	33-449339	.20
60	Resistor (5000 ohms)	33-250339	.20
61	Resistor (45000 ohms)	33-345339	.20
62	Condenser (.02 mfd. bakelite)	8318-SU	.20
63	Condenser (.03 mfd. bakelite)	8318-SU	.20
64	Resistor (330000 ohms)	33-433339	.20
65	Resistor (99000 ohms)	33-399339	.20
66	Resistor (330000 ohms)	33-433339	.20
67	Resistor (99000 ohms)	33-399339	.20
68	Resistor (51000 ohms)	33-351339	.20
69	Condenser (.1 mfd. tubular)	30-4455	
70	Resistor (51000 ohms)	33-351339	.20
71	Condenser (.015 mfd. dual bakelite)	3903-LU	
72	Resistor (1 megohm)	33-510339	.20
73	Condenser (.003 mfd. tubular)	30-4459	.20
74	Condenser (.003 mfd. tubular)	30-4459	.20
75	Audio Input Transformer	32-7671	2.50
76	Output Transformer (K-37, H-28)	32-7988	
77	Cone and Voice Coil (K-37)	36-9020	
	Cone and Voice Coil (H-28)	02625	
78	Resistor (70000 ohms)	33-370439	.20
79	Resistor (15000 ohms)	33-315339	.20
80	Resistor (25000 ohms)	33-325639	.20
81	Resistor (51000 ohms)	33-351339	.20
82	Resistor (5600 ohms wirewound)	33-3283	.60
83	Resistor (250 ohms wirewound)	33-3281	.60
84	Field Coil Assembly (K-37, H-28)	36-3104	
85	Filter Choke	32-7115	1.80
86	Electrolytic Condenser (8, 10 mfd.)	30-2045	1.80
87	Condenser (.25 mfd.) tubular	30-4446	.25
88	Electrolytic Condenser (8 mfd.)	30-2025	1.25
89	Pilot Lamp	34-2089	.15
90	Power Transformer 115 V., 50-60 cycles	32-7640	6.50
	Power Transformer 115 V., 25-40 cycles	32-7641	
91	Condenser (.015 mfd. dual bakelite)	3793-DG	.40
92	Power and Tone Control Switch	42-1184	.75
93	Range Switch (Ant.)	42-1211	1.60
94	Range Switch (R.F.)	42-1285	1.60
95	Range Switch (Osc.)	42-1213	1.60
96	Shadowmeter Lamp	34-2054	.09
	Switch Index Plate and Shaft	42-1187	.50
	Pilot Lamp Assembly	38-7706	.35
	Dial	27-5212	.40
	Hub	38-7187	.12
	Clamp	28-2837	$0.06
	Set Screw	W-1641	.02
	Gear (Dial)	28-7185	.10
	Gear (Drive)	31-1834	.35
	Thrust Spring	28-5611	.01
	Thrust Washer	28-3976	.30 C
	"C" Washer	28-3904	.01
	Mask	27-5206	.30
	Mask Arm and Link Assembly	31-1887	.45
	Mask Washer	27-8218	.50 C
	Mask Guide and Bracket	38-7876	.25
	Screens and Lens Holder Assembly	31-1900	.30
	Volume Control Shaft	38-9060	
	Retaining Clip	28-4304	
	Spring	28-4117	.40 C
	Tube Shield	28-2736	
	Tube Shield Base	28-3808	
	Socket 7 prong	27-6057	.11
	Socket 8 prong	27-6058	.11
	Socket Rectifier	27-6052	.11
	Terminal Panel (Ant.)	38-7714	.15
	Grommet Mtg. R. F. Unit	27-4317	.04
	Sleeve Mtg. R. F. Unit	28-2257	.01
	Washer Mtg. R. F. Unit	27-7807	.50 C
	Screw Mtg. R. F. Unit	W-729	.45 C
	Rubber Mtg. (Gang Condenser)	27-4328	.02
	Spring Mtg. Shadowmeter	28-8532	.70 C
	Plate Mtg. R. F. Transformer	28-2808	
	Spacer Mtg. R. F. Transformer	27-8228	
	Screw Mtg. R. F. Transformer	W-1635	
	Screw Chassis Mtg.	W-1495	1.50 C
	Washer Chassis Mtg.	28-2089	.30 C
	Shield (Chassis Bottom)	38-8143	
	Snap Fasteners	38-4379	
	Rubber Cushion (X Cabipet)	3558	
	Rubber Bushing (two required)	27-4360	
	Rubber Washer	5189	
	Speaker Cable	41-2210	
	A. C. Cord	L-2153	.40
	Knob Tuning	27-4320	.10
	Knob Tuning Vernier	27-4321	.10
	Knob Tone & Volume	27-4322	.10
	Knob Range Switch	27-4326	10

B & X CABINET PARTS

Bezel Frame and Plate	40-5048	.80
Glass	27-5300	.06
Ring	28-3088	.45
Gasket	27-5313	.01
Speaker K-37, "B" Cabinet	36-1235	7.25
Baffle Silk Assembly, X Cabinet	40-6015	
Speaker (H-28) "X" Cabinet	36-1242	

Figures in blank type indicate circled figures in Base View. Prices Subject to Change Without Notice.

PHILCO RADIO & TELEV. CORP.

MODEL 89(Code 123)
Schematic
Socket, Trimmers

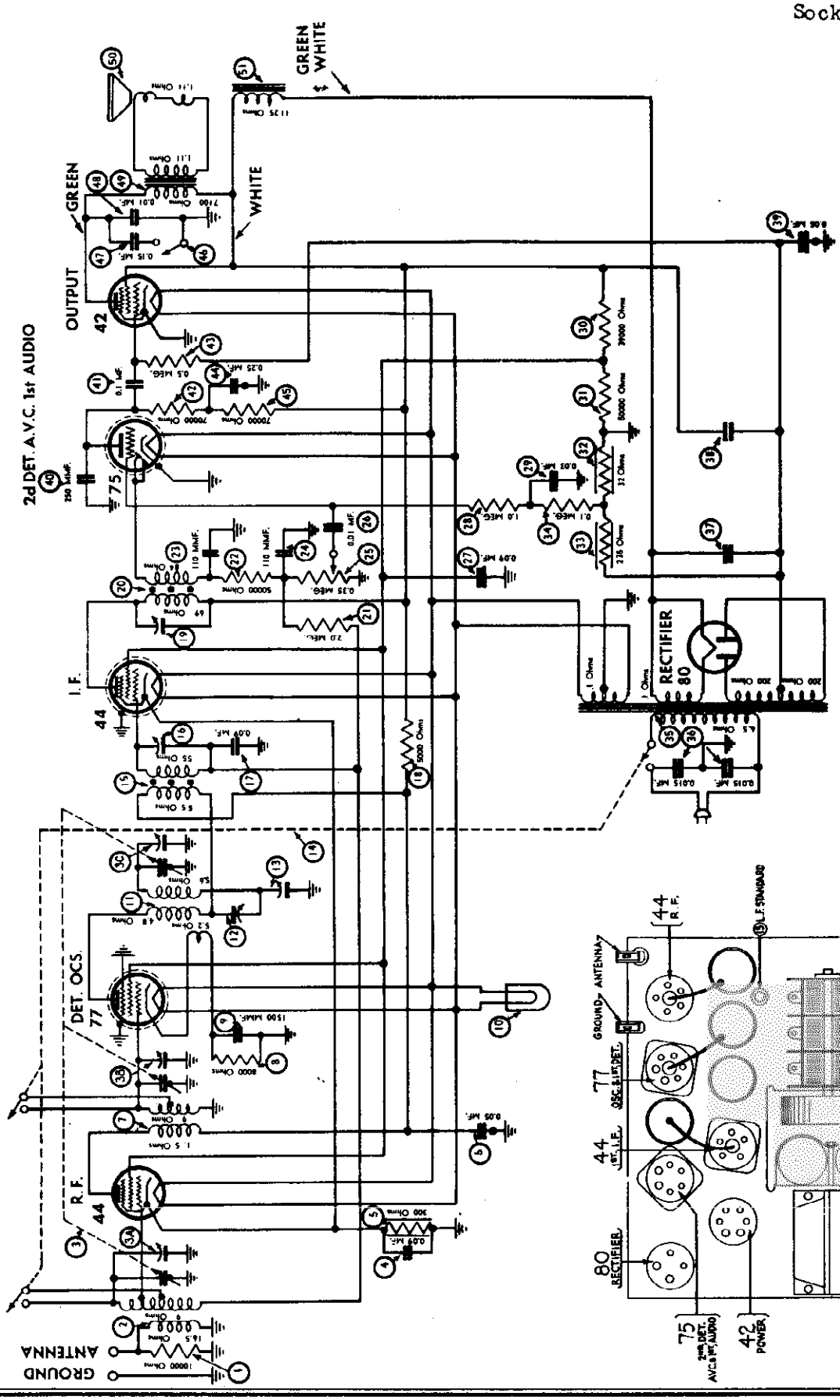

Fig. 2. Location of Compensating Condensers

©John F. Rider, Publisher

MODEL 89(Code 123)
Voltage,Trimmers
Alignment

PHILCO RADIO & TELEV. CORP.

Model 89 (Code 123)

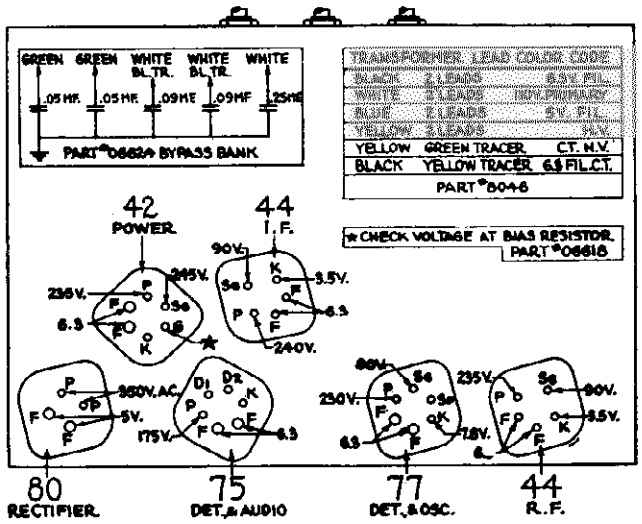

Fig. 1. Bottom View of Tube Sockets (Showing Voltages)

Description

The **PHILCO Model 89**, code 123, is of advanced design, incorporating a highly selective and very efficient R. F. Preamplifier, using the type 44 high mu tube.

The 1st detector and oscillator are combined in one tube, a type 77. The design of the oscillator circuit is such that changes in climatic conditions do not affect its stability. A single intermediate frequency stage designed around the high gain type 44 tube is used, insuring a maximum of power; a saving of two tubes is accomplished in the second detector unit by using a type 75 tube. This tube is a combination diode, triode; the diode functioning as a detector and automatic volume control and the triode as a separate audio amplifier.

The power or output stage uses a type 42 (6.3 fil.) pentode and is capable of delivering 3 watts undistorted output.

Adjusting Compensating Condensers

Adjustment of compensating condensers in the Model 89 requires an accurate signal generator covering the intermediate frequency as well as the standard broadcast range. The **PHILCO Model 088** or **024** can be used for this purpose.

Some instrument for measuring the output of the receiver while adjustments are being made is necessary. The **PHILCO 025 Circuit Tester** incorporates an output meter that is ideal for this purpose.

A **PHILCO No. 3164 Fibre Wrench** completes the equipment needed.

The location of the various compensating condensers is shown in Fig. 2 and Fig. 3. Connect the output meter to the plate and cathode terminals of the type 42 power tube, using the adapters provided with the "025" and set it for the 0–30 volt range.

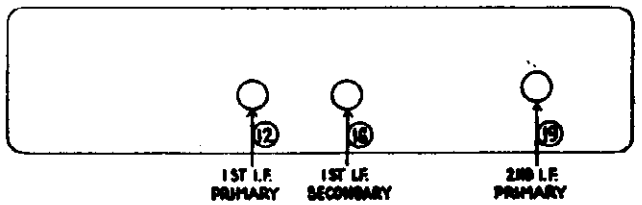

Fig. 3. I. F. Padder View from Rear of Chassis

I.F.—Set the signal generator at 260 K. C. and attach its antenna lead to the grid of the type 44 I.F. tube. Connect the ground lead of signal generator to the ground post of chassis. Turn the dial of the set to 540 K. C. and the volume control to the extreme right (maximum). Wave band switch in No. 1 position (left), tone control also in No. 1 position (left), adjust the signal generator attenuator for approximately ¼ scale reading on output meter. Using the fibre tuning wrench adjust condenser ⑲ (2nd I.F.) for maximum output meter reading. Remove the signal generator antenna lead from the grid of the 44 I.F. tube and connect it to the grid (removing grid clip), of the type 77, 1st detector and oscillator tube. Adjust the signal generator attenuator as before for ¼ scale output meter reading. With the fibre tuning wrench adjust condensers ⑭ and ⑫ (1st I.F.) for maximum output meter reading.

STANDARD (broadcast) and POLICE: Remove the antenna lead of the signal generator from the grid of the type 77 tube (replacing grid clip) and attach it to the antenna post on the chassis. Set the signal generator at 1500 K. C. and tune the set to 150 (1500 K. C.). Adjust signal generator attenuator as before for ¼ scale output meter reading. With the fibre tuning wrench adjust condensers ③A, ③B and ③C, for maximum output meter reading. Set the signal generator at 550 K. C. and tune the set to 55 (550 K. C.) adjust condenser ⑬ for maximum output meter reading. Readjust condenser ③C at 1500 K. C. During adjustments keep the output meter reading approximately ¼ scale to insure proper peaking of transformers.

©John F. Rider, Publisher

Parts List

MODEL 89(Code 123)
Chassis

PHILCO RADIO & TELEV. CORP.

Replacement Parts for Model 89 (Code 123)

PRICES ARE SUBJECT TO CHANGE WITHOUT NOTICE

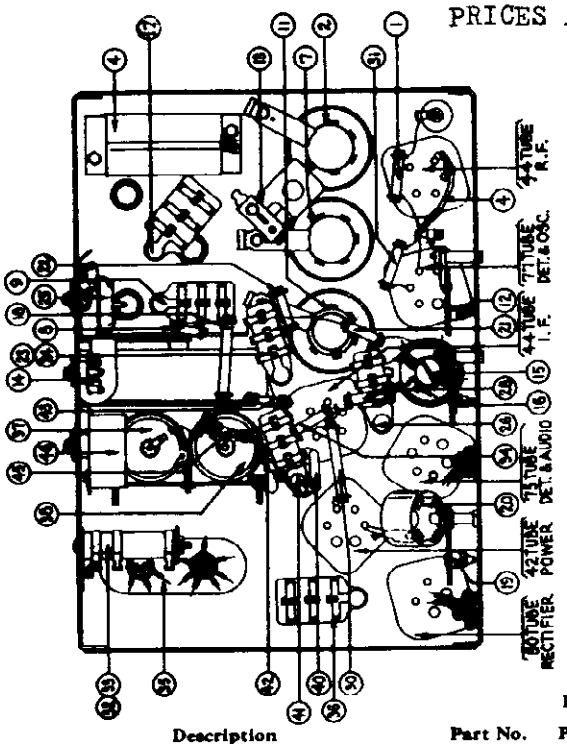

Fig. 5. Bottom View of Chassis

	Description	Part No.	List Price
①	Resistor (10,000 ohms)	4412	$0.20
②	Antenna Transformer	32-1062	.70
③	Tuning Condenser Gang	31-1053	4.80
③a	Compensator (Antenna)	Part of ③	....
③b	Compensator (R. F.)	Part of ③	....
③c	Compensator (Osc.)	Part of ③	....
④	Condenser (.09-.05-.09-.05-.25 mf.)	06624	.90
⑤	Resistor (300 ohms)	33-3010	.20
⑥	Condenser (0.05 mf.)	Part of ④	....
⑦	Detector Coil	32-1063	.50
⑧	Resistor (8,000 ohms)	33-1114	.20
⑨*	Condenser (.0015 mf. and .05 mf.)	3615-XG	.40
⑩	Pilot Light	6608	.09
⑪	Oscillator Coil	06620	.90
⑫	Compensating Condenser (Pri. 1st I. F.)	31-6024	.25
⑬	Compensating Condenser (L. F. Series)	04000-S	.35
⑭	Waveband Switch	42-1016	1.25
⑮	1st I. F. Transformer	32-1289	.60
⑯	Compensating Condenser (1st I. F. Sec.)	04000-M	.20
⑰	Condenser (0.09 mf.) (Twin)	4989-DG	.40
⑱	Resistor (5,000 ohms)	3526	.20
⑲	Compensating Condenser (2nd I. F. Pri.)	04000-A	.15
⑳	2nd I. F. Transformer	06622	$1.20
㉑	Resistor (2.0 meg.)	5872	.20
㉒	Resistor (50,000 ohms)	4518	.20
㉓	Condenser (.00011 mf.)	8035-DG	.25
㉔	Condenser (.00011 mf.)	Part of ㉓	....
㉕	Volume Control, On-Off Switch	33-5004	1.45
㉖	Condenser (0.01 mf.)	3903-SU	.25
㉗	Condenser (0.09 mf.)	Part of ④	....
㉘	Resistor (1.0 meg.)	4409	.20
㉙	Condenser (0.09 mf.)	Part of ⑰	....
㉚	Resistor (39,000 ohms)	33-1027	.20
㉛	Resistor (50,000 ohms)	4518	.20
㉜	B. C. Resistor (32 ohms)	7998	.20
㉝	B. C. Resistor (235 ohms)	Part of ㉜	....
㉞	Resistor (100,000 ohms)	4411	.20
㉟	Power Transformer	8046	3.50
㊱	Condenser (0.015-0.015 mf.)	3793-DG	.40
㊲	Condenser (Electrolytic) (8 mf.)	7558	1.25
㊳	Condenser (Electrolytic) (8 mf.)	7558	1.25
㊴	Condenser (0.05 mf.)	Part of ④	....
㊵	Condenser (250 mmf.)	5858	.25
㊶	Condenser (0.01 mf.)	3903-SU	.25
㊷	Resistor (70,000 ohms)	5385	.20
㊸	Resistor (500,000 ohms)	4517	.20
㊹	Condenser (0.25 mf.)	Part of ④	....
㊺	Resistor (70,000 ohms)	5385	.20
㊻	Tone Control	06764	.50
㊼	Condenser (0.015 mf.)	Part of ㊻	....
㊽	Condenser (0.01 mf.)	Part of ㊻	....
㊾	Output Transformer	2580	1.00
㊿	Replacement Cone Assembly (K-21)	36-3159	.80
(51)	Replacement Field Coil Assembly (K-21)	36-3245	4.00
	I. F. Shield	4450	.15
	R. F. Shield	5084	.15
	R. F. Shield	8000	.12
	Tube Shield Body	28-2726	.10
	Tube Shield Base	28-2725	03
	Speaker Cable	02720	.35
	Drive Cord Spring	7776	2.00C
	Drive Cord	31-1457	.10
	Dial Hub and Scale	31-1590	.40
	Bezel	27-4113	.20
	Bezel Screws	W841B	.50C
	Knob (Tuning)	27-4051	.10
	Knob (Volume, Tone, Wave Switch)	27-4052	.10

*The .05 mf. section connects the same as condenser ⑥.

©John F. Rider, Publisher

MODEL 600
Voltage, Socket
Chassis, Alignment
Chassis, Data

PHILCO RADIO & TELEV. CORP.

Model 600

Specifications

TYPE CIRCUIT: Superheterodyne with pentode output.
POWER SUPPLY: 115 V., 60 cycle A.C.
TUBES USED: 1 type 6A7, Det. Osc., 1 type 77, 2nd Det., 1 type 41, Output, 1 type 80 Rectifier.
FREQUENCY RANGE: 530-1800 K.C.
INTERMEDIATE FREQUENCY: 460 K.C.
CURRENT CONSUMPTION: 45 watts.
SPEAKER: B-6.
POWER OUTPUT: ½ watt.

Adjusting Compensating Condensers

Adjustment of compensating condensers in Model 600 requires an accurate signal generator covering I.F., and standard-wave frequencies. The **PHILCO Model 088 All-Wave Signal Generator,** having a continuous range of from 100 to 20,000 K.C., is ideal for this purpose.

An output meter is also needed. **PHILCO Model 025 Circuit Tester** includes a high grade output meter.

Philco No. 3164 fibre wrench and No. 27-7059 fibre-handled screwdriver complete the equipment needed for making these adjustments. The locations of the various compensaters are shown in Fig. 4. Connect the output meter to the plate and cathode contacts of the type 41 power tube (using the adapters provided with the "025") and set it at the 0-30 volt range.

INTERMEDIATE FREQUENCY: Connect the 088 signal generator antenna lead to the grid of the 6A7 (removing grid clip) and the ground lead to the ground post or some part of the chassis. Adjust sensitivity control ㉘ approximately 1½ turns from tight (counter clockwise), then set the 088 signal generator at 460 K.C. and the attenuator for approximately ¼ scale reading on output meter. Adjust condensers ⑩ and ㉙ for maximum reading on output meter. Turn sensitivity control ㉘ in (clockwise) until a low hiss or click (oscillation) is heard. Then turn it out (counter clockwise) approximately ¼ turn.

STANDARD and POLICE: Remove the 088 signal generator antenna lead from the grid of the 6A7 (replacing grid clip) and connect it to the aerial post on the set. Turn the condenser gang all the way out (minimum capacity) and place a .006" (six thousandth inch) gauge between the stator and rotor plates. Turn the condenser gang in until the correct spacing (.006") is had between the rotor and stator plates. The pointer on the front of the cabinet should be set at 1800 K.C. to coincide with this condenser gang setting.

With the condenser gang set in this manner, set the 088 signal generator at 1800 K.C. and adjust condensers ⑤ and ⑪ for maximum reading on output meter.

Set the condenser gang and 088 signal generator at 600 K.C. and adjust condenser ⑩ for maximum output meter reading.

Care should be taken to adjust the 088 signal generator attenuator for approximately ¼ scale output meter reading for each stage before attempting to adjust compensators.

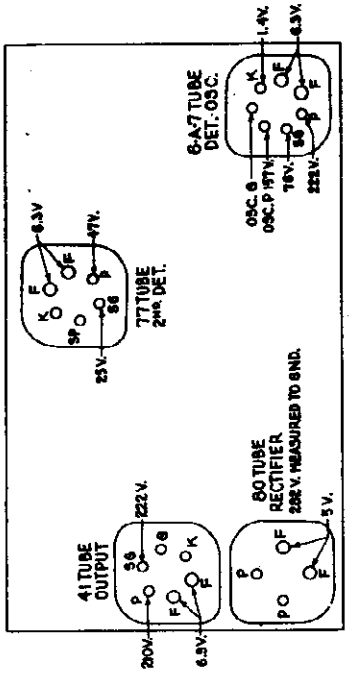

Fig. 2. Tube Sockets as Viewed from Bottom (Measured from Socket Terminal to B—)

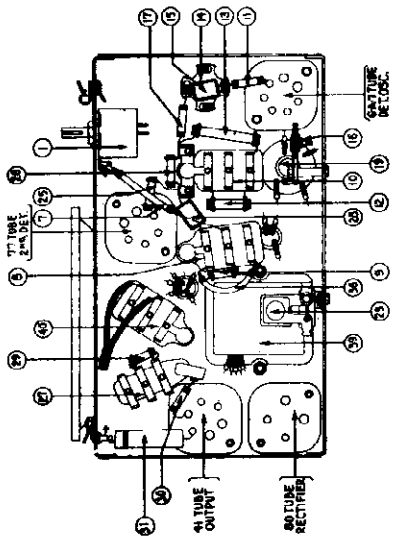

Fig. 3. Base View

POWER TRANSFORMER DATA

TERMINAL	A.C. VOLTS	CURRENT	CIRCUIT	COLOR
1-2	120		PRIMARY	WHITE
5-7	710	118 M.A.	SECONDARY	YELLOW
3-4	5.0	2.0 A.	FIL. RECT.	BLUE
8-10	6.3	3.5 A.	FILAMENTS	BLACK
6			CENTER TAP OF 5-7	YELLOW, GREEN TRACER
9			CENTER TAP OF 8-10	BLACK, YELLOW TRACER

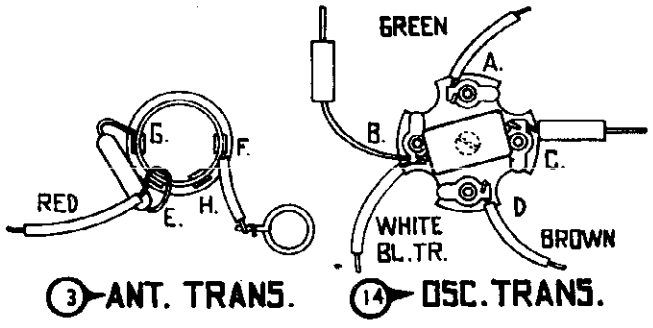

Fig. 1. Transformer Terminal Code

©John F. Rider, Publisher

©John F. Rider, Publisher

PRICES ARE SUBJECT TO CHANGE WITHOUT NOTICE

Replacement Parts for Model 600

Schematic Number	Part and Description	Part No.	Price List
①	Volume Control	33-5152	...
②	Condenser (35 Mmf. Mica)	30-1044	$.20
③④⑤	Ant. Transformer	32-2030	1.40
③④⑤	Tuning Condenser	31-1755	2.75
⑤	Compensater (Det. 1500 K.C.)	Part of ②	...
⑥	Compensater (Osc. 1500 K.C.)	Part of ④	...
⑦	Resistor (200 ohm)	7217	.20
⑧	Condenser (.05 mf. Twin Bakelite)	3615-DG	.40
⑨	Resistor (4900 ohm, ½ watt)	33-249334	.20
⑩	Condenser (.09 mf. Twin Bakelite)	4989-DG	.40
⑪	Resistor (51,000 ohm, ¼ watt)	33-351143	.20
⑫	Resistor (25,000 ohm, ½ watt)	33-325343	.20
⑬	Resistor (25,000 ohm, 1 watt)	33-325443	.20
⑭	Osc. Transformer	32-2043	1.20
⑮	Condenser (110 mmf. Mica)	30-1031	.20
⑯	Compensater (Osc. Series) (600 K.C.)	04000 S	.35
⑰	Resistor (25,000 ohm, ½ watt)	33-325343	.20
⑱	Compensater (I.F. Pri) (460 KC.)	Part of ⑲	...
⑲	I.F. Transformer	32-2031	1.50
⑳	Compensater (I.F. Sec.) (460 KC.)	Part of ⑲	...
㉑	Condenser (50 mmf. Mica)	30-1029	.20
㉒	Resistor (1.5 meg., ¼ watt)	33-515133	.20
㉓	Sensitivity Control	31-6086	.45
㉔	Condenser (.09 mf.)	Part of ⑩	...
㉕	Resistor (10,000 ohm, ¼ watt)	33-310133	.20
㉖	Resistor (240,000 ohm, ¼ watt)	33-424143	.20
㉗	Condenser (.01 mf. Bakelite)	3903-SU	.25
㉘	Condenser (.00025 mf.) (Mica)	30-1032	.25
㉙	Resistor (750,000 ohm, ¼ watt)	33-475133	.20
㉚	Resistor (1.0 meg., ¼ watt)	33-510143	.20
㉛	Condenser (.01 mf.) (Tubular)	30-4124	.25
㉜	Output Transformer	32-7043	.95
㉝	Voice Coil Cone Assy.	36-3029	.60
㉞	Field Coil Assy.	36-3593	2.50
㉟	Elec. Condenser (4.-8. mf.)	30-2149	1.95
㊱	Resistor (300 ohm)	33-3121	.25
㊲	Condenser (.05 mf.)	Part of ㊱	...
㊳	Elec. Condenser (8.0 mf.)	Part of ㊱	...
㊴	Power Transformer (110 V., 60 Cycle)	32-7552	3.25
㊵	Condenser (.015 mf. Twin)	3793-DG	.40
㊶	Pilot Lamp (6.3 Volt)	34-2064	.09

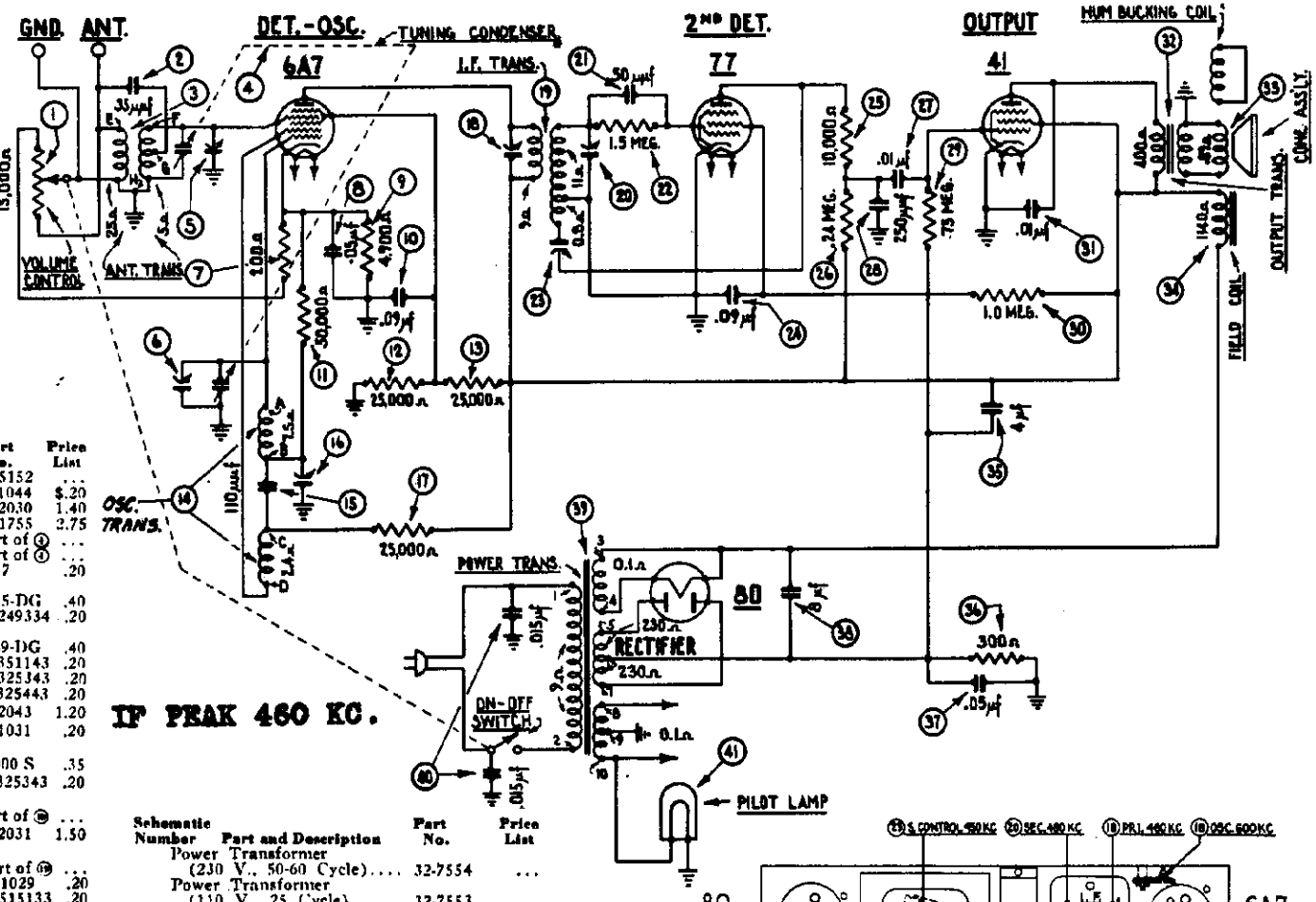

Schematic Number	Part and Description	Part No.	Price List
	Power Transformer (230 V., 50-60 Cycle)	32-7554	...
	Power Transformer (110 V., 25 Cycle)	32-7553	...
	Tube Shield Body	28-2726	.10
	Tube Shield Base	28-2725	.03
	Tube Socket (6-prong)	27-6036	.11
	Tube Socket (7-prong)	27-6037	.11
	Tube Socket (4-prong)	27-6044	.10
	Volume Control Mtg. Nut	W-648-A	.20C
	Chassis Mtg. Screw	W-1587-A	.75C
	Chassis Mtg. Nut	W-124-A	.35C
	Chassis Mtg. Washer	W-410-A	.15C
	Chassis Mtg. Washer	W-291-A	.40C
	Baffle	27-8232	.04
	Dial	27-5179	.20
	Knob (Station Selector)	27-4302	...
	Knob (Volume, On-Off)	27-4273	.10
	Bottom Shield Assy.	29-3795	.40
	Bottom Shield Ins.	27-8122	.05
	Pointer	27-7933	.01
	Pilot Lamp Bracket Assy.	38-7581	.20
	Coupling (For Tuning Knob)	28-6426	.15

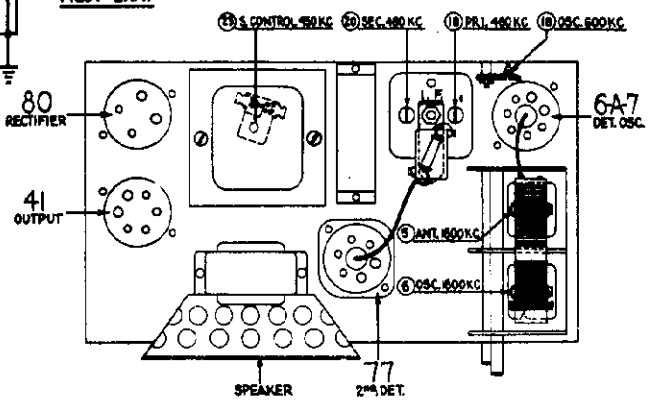

Fig. 4. Location of Compensators

MODEL 602
Voltage, Socket
Trimmers, Chassis
Alignment

PHILCO RADIO & TELEV. CORP.

Model 602

Specifications

TYPE CIRCUIT: Superheterodyne with pentode output.
POWER SUPPLY: 115 V., 25 or 60 cycle A. C., D. C.
TUBES USED: 1 type 6A7, Osc. Det., 1 type 78 I.F. Amplifier, 1 type 75, 2nd Det. 1st audio, 1 type 43 output, 1 type 25Z5, rectifier.
FREQUENCY RANGE: 530-1800 K.C.
INTERMEDIATE FREQUENCY: 460 K.C.
CURRENT CONSUMPTION: 55 watts.
SPEAKER: B-4.
POWER OUTPUT: ¾ watt.

Adjusting Compensating Condensers

Adjustment of compensating condensers in Model 602 requires an accurate signal generator covering I.F., and standard-wave frequencies. The **PHILCO Model 088 All-Wave Signal Generator,** having a continuous range of from 100 to 20,000 K.C., is ideal for this purpose.

An output meter is also needed. **PHILCO Model 025 Circuit Tester** includes a high grade output meter.

Philco No. 3164 fibre wrench and No. 27-7059 fibre-handled screwdriver complete the equipment needed for making these adjustments. The locations of the various compensating condensers are shown in Fig. 4. Connect the output meter to the plate and cathode contacts of the type 43 power tube (using the adapters provided with the "025") and set it at the 0-30 volt range.

INTERMEDIATE FREQUENCY: Turn the condenser gang all the way in (maximum capacity) and set the volume control of set at maximum (clockwise). Connect the 088 signal generator antenna lead to the grid of the 78 I.F. tube through a .00025 mf. condenser and the ground lead to the ground post of the set. Set the 088 signal generator attenuator for approximately ¼ scale reading on output meter. Adjust condensers ㉗ and ㉙ for maximum output meter reading.

Remove the 088 signal generator antenna lead from the grid of the 78 and connect it to the grid of the 6A7, adjust condensers ㉑ and ㉓ for maximum output meter reading.

WAVE TRAP: Connect the 088 signal generator antenna lead to the aerial post of set. Adjust condenser ①a for *minimum* output meter reading.

STANDARD and POLICE: Turn the condenser gang all the way out (minimum capacity) and place a .006" (six thousandth inch) gauge between the stator and rotor plates. Turn the condenser gang in until the correct spacing (.006") is had between the rotor and stator plates. The pointer on the front of the cabinet should be set at 1800 K.C. to coincide with this condenser gang setting.

With the condenser gang set in this manner, set the 088 signal generator at 1800 K.C. and adjust condensers ①a and ⑥a for maximum output meter reading.

Set the condenser gang and 088 signal generator at 600 K.C. and adjust condenser ⑧ for maximum output meter reading.

Care should be taken to adjust the 088 signal generator attenuator for approximately ¼ scale output meter reading for each stage before attempting to adjust compensators.

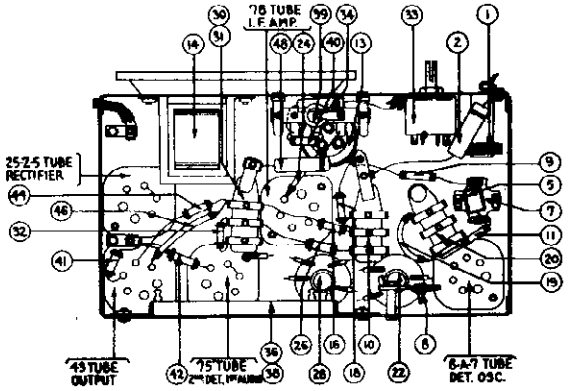

Fig. 3. Base View

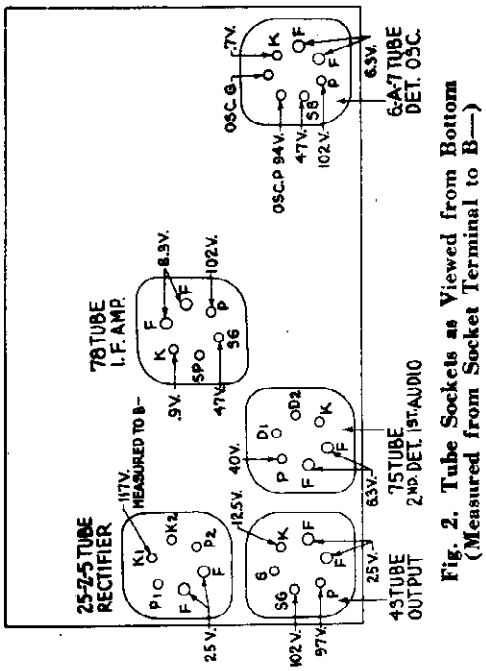

Fig. 2. Tube Sockets as Viewed from Bottom (Measured from Socket Terminal to B—)

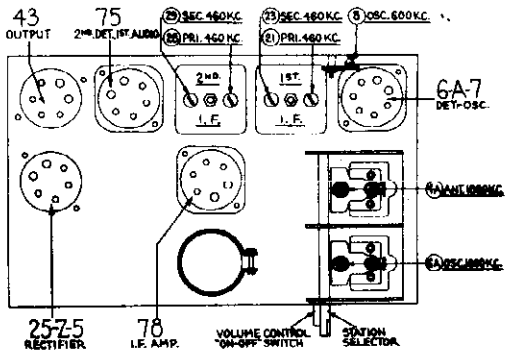

Fig. 4. Location of Compensators

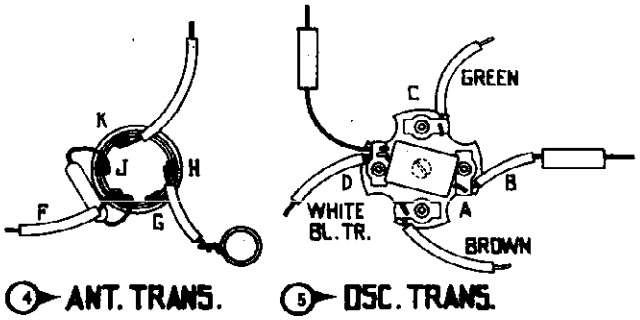

Fig. 1. Transformer Terminal Code

©John F. Rider, Publisher

©John F. Rider, Publisher

PRICES ARE SUBJECT TO CHANGE WITHOUT NOTICE

IF PEAK 460 KC.

Replacement Parts for Model 602

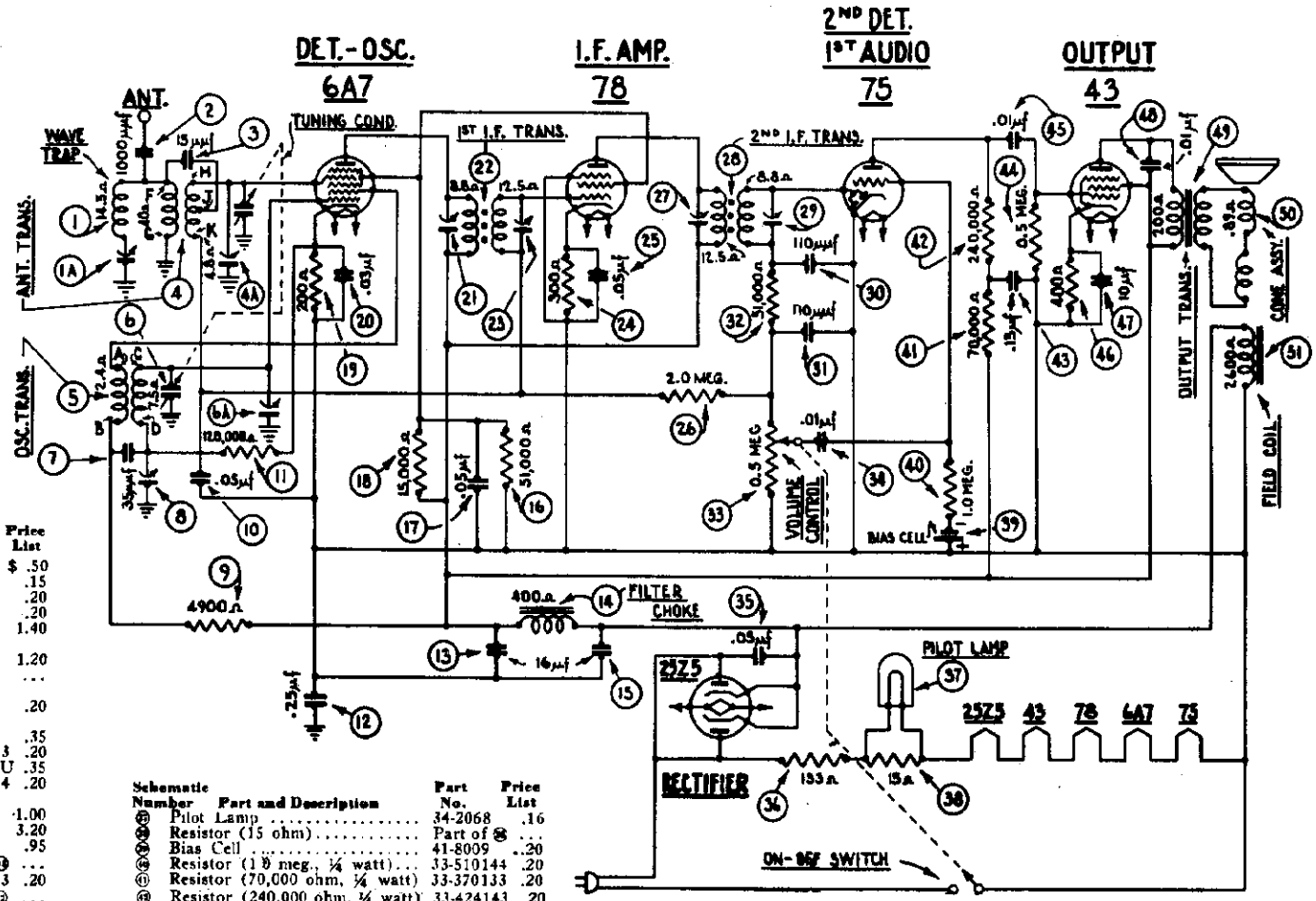

Fig. 5. Schematic Wiring Diagram

Schematic Number	Part and Description	Part No.	Price List
①	Wave Trap Coil	32-2007	$ .50
①a	Wave Trap Compensator	04000D	.15
②	Condenser (.001 Mf. Tubular)	30-4201	.20
③	Condenser (15 mmf. Mica)	30-1030	.20
④	Ant. Transformer	32-2003	1.40
④a	Compensater (Osc. 1800 KC.)		
⑤	Osc. Transformer	32-2041	1.20
⑥	Tuning Condenser	31-1794	...
⑥a	Compensater (Ant. 1800 KC.)		
⑦	Condenser (35 mmf. Mica)	30-1044	.20
⑧	Compensator (Osc. Series) (600 Kc.)	04000S	.35
⑨	Resistor (4900 ohm, ½ watt)	33-249333	.20
⑩	Condenser (.05 Mf. Bakelite)	3615-OSU	.35
⑪	Resistor (120,000, ½ watt)	33-412334	.20
⑫	Condenser (.25-.05-.05-.05-.15-.01 mf)	30-4410	1.00
⑬	Elec. Condenser (16-16-10 mf.)	30-2148	3.20
⑭	Filter Choke	32-7544	.95
⑮	Elec. Condenser (16 mf.)	Part of ⑬	...
⑯	Resistor (51,000 ohm, ¼ watt)	33-351143	.20
⑰	Condenser (.05 mf.)	Part of ⑫	...
⑱	Resistor (15,000 ohm, ¼ watt)	33-315133	.20
⑲	Resistor (200 ohm wirewound)	7217	.20
⑳	Condenser (.03 mf. Bakelite)	8318-OSU	.35
㉑	Compensator (1st I.F. Pri.)	Part of ㉒	...
㉒	1st I.F. Transformer	32-2005	1.50
㉓	Compensater (1st I.F. Sec.)	Part of ㉒	...
㉔	Resistor (300 ohm wirewound)	33-3010	.20
㉕	Condenser (.05 mf.)	Part of ㉔	...
㉖	Resistor (2.0 meg., ¼ watt)	33-520143	.20
㉗	Compensater (2nd I.F. Pri.)	Part of ㉘	...
㉘	2nd I.F. Transformer	32-2006	1.50
㉙	Compensator (2nd I.F. Sec.)	Part of ㉘	...
㉚	Condenser (.00011 mf. twin)	8035-ODU	.25
㉛	Condenser (.00011 mf.)	Part of ㉚	...
㉜	Resistor (51,000 ohm, ¼ watt)	33-351143	.20
㉝	Volume Control (0.5 meg.)	33-5145	1.45
㉞	Condenser (.01 mf. Tubular)	30-4145	.20
㉟	Condenser (.05 mf.)	Part of ⑫	...
㊱	B. C. Resistor (133-15 ohm)	33-3225	.55
㊲	Pilot Lamp	34-2068	.16
㊳	Resistor (15 ohm)	Part of ㊱	...
㊴	Bias Cell	41-8009	.20
㊵	Resistor (1.0 meg., ¼ watt)	33-510144	.20
㊶	Resistor (70,000 ohm, ¼ watt)	33-370133	.20
㊷	Resistor (240,000 ohm, ¼ watt)	33-424143	.20
㊸	Condenser (.15 mf.)	Part of ㊷	...
㊹	Resistor (490,000 ohm, ¼ watt)	33-449143	.20
㊺	Condenser (.01 mf.)	Part of ㊷	...
㊻	Resistor (400 ohm wirewound) (Flexible)	33-3122	.25
㊼	Elec. Condenser (10 mf.)	Part of ㊽	...
㊽	Condenser (.01 mf. Tubular)	30-4169	.20
㊾	Output Transformer	32-7566	...
㊿	Voice Coil Cone Assy.	36-3029	.60
(51)	Field Coil Assy.	36-3040	2.40
	Volume Control Mtg. Nut	W-684-A	1.25C
	B.C. Resistor Mtg. Screw	W-650-A	.40C
	B.C. Resistor Mtg. Nut	W-95-A	.30C
	Tube Shield Base	28-2725	.03
	Tube Shield Body	28-2726	.10
	Chassis Mtg. Screw	W-1587-A	.75C
	Chassis Mtg. Nut	W-124-A	.35C
	Chassis Mtg. Washer	W-410-A	.15C
	Chassis Mtg. Washer	W-291-A	40C

Part and Description	Part No.	Price List
Speaker Baffle	40-5840	...
Dial	27-5188	...
Pointer	27-8236	...
Shield Bottom Assy.	29-3605	...
Shield Bottom Insulator	27-8182	.02
Tube Socket (6-prong)	27-6036	.11
Tube Socket (7-prong)	27-6037	.11
Knob (Volume, On-Off)	27-4273	.10
Knob (Station Selector)	27-4302	...
Elec. Condenser Support	6440	.05
Elec. Condenser Insulator	27-7836	.06
Pilot Lamp Bracket Assy.	38-7513	.50
Ant. Coil Mfg. Bracket	28-3546	.03
Bias Cell Assy.	38-7436	.15
Coupling (For Tuning Knob)	28-6426	.15

MODEL 604
Voltage, Socket
Chassis, Parts

PHILCO RADIO & TELEV. CORP.

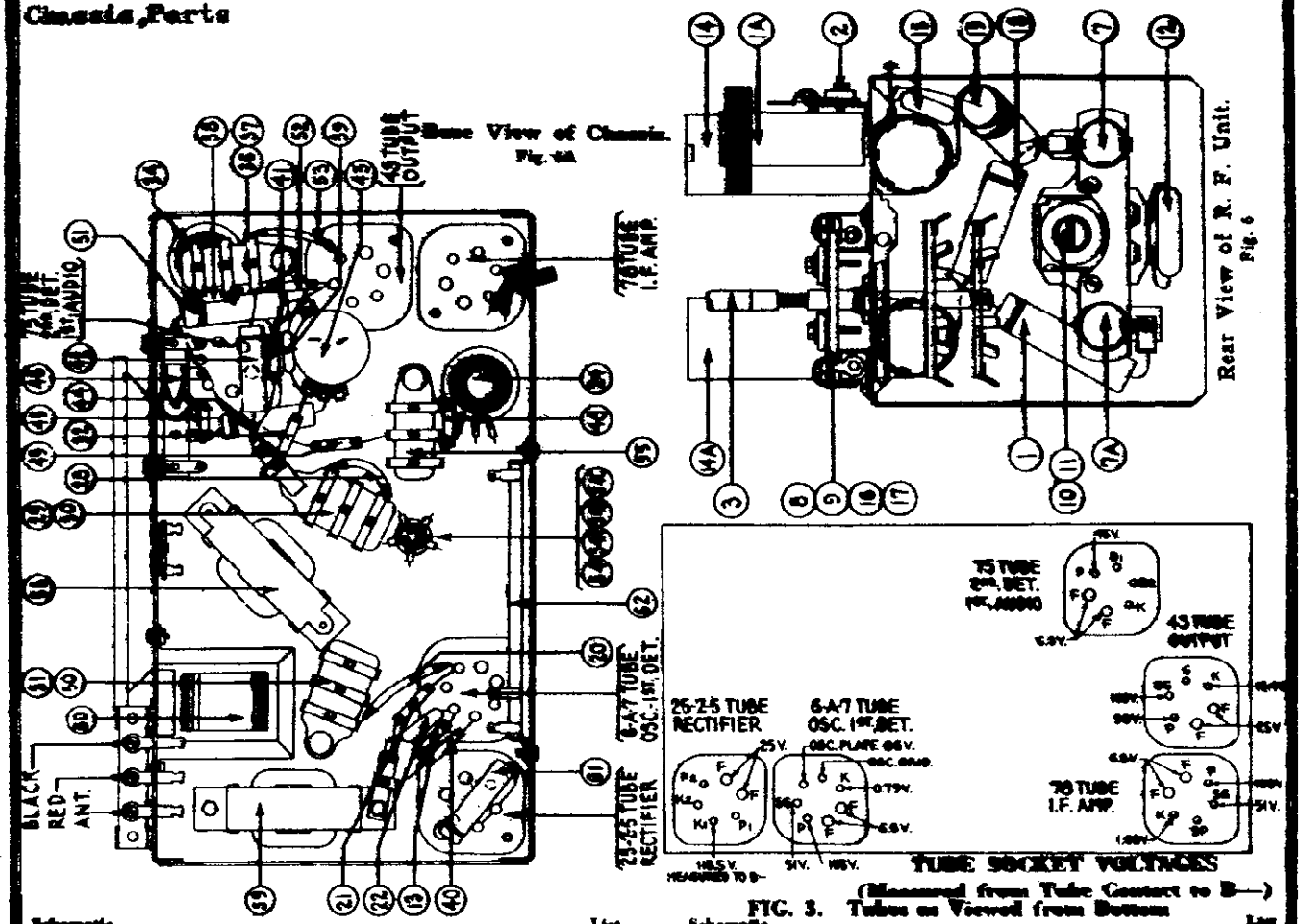

FIG. 3. Tubes as Viewed from Bottom

Schematic Number	Part and Description	Part No.	List Price
①	Condenser (.001 Mfd. Tubular)	30-4201	$0.20
②	Wave Trap Coil	32-2093	.50
③	Wave Trap Compensator (460 K.C.)	31-6084	.15
④	Wave Band Switch Assy.	38-7631	1.50
⑤	Pilot Lamp (S.W. 6.3 V.)	34-2068	.10
⑥	Pilot Lamp (Bdcst. 6.3 V.)	34-2068	.10
⑦	Tuning Condenser	31-1796	3.25
⑧	Oscillator Transformer (Bdcst.)	32-2047	.45
⑨	Oscillator Transformer (S.W.)	32-2048	.45
⑩	Compensator (Osc. 1400 K.C.)	31-6085	.60
⑪	Compensator (Osc. 18.0 M.C.)	Part of ⑩	
⑫	Compensator (Osc. series, screw, 500 K.C.)	31-6027	.70
⑬	Compensator (Osc. series, nut, 6.0 M.C.)	Part of ⑫	
⑭	Condenser (.00325 Mfd. Mica)	30-1061	.45
⑮	Resistor (13,000 ohms, ½ watt)	33-313133	.20
⑯	Antenna Transformer (Bdcst.)	32-2045	1.10
⑰	Antenna Transformer (S.W.)	32-2046	.55
⑱	Condenser (15 Mmfd., Mica)	30-1030	.20
⑲	Compensator (Ant., 1400 K.C.)	Part of ⑩	
⑳	Compensator (Ant., 18.0 M.C.)	Part of ⑪	
㉑	Condenser (.05 Mfd., Tubular)	30-4020	.20
㉒	Condenser (.15 Mfd., Tubular)	30-4191	.25
㉓	Resistor (200 ohms, wire wound)	7217	.20
㉔	Resistor (120,000 ohms, ½ watt)	33-412334	.20
㉕	Condenser (250 Mmfd., Mica)	30-1032	.25
㉖	Compensator (1st I.F. Pri. 460 K.C.)	Part of ㉗	
㉗	1st I.F. Transformer	32-2049	1.50
㉘	Compensator (1st I.F. Sec. 460 K.C.)	Part of ㉗	
㉙	Eliminated By Production Changes		
㉚	Resistor (300 ohms, wire wound)	33-3010	.20
㉛	Condenser (.1 Mfd. Twin Bakelite)	4989-ODU	.40
㉜	Condenser (.1 Mfd. Twin Bakelite)	Part of ㉛	
㉝	Condenser (.1 Mfd. Twin Bakelite)	4989-ODU	.40
㉞	Resistor (2.0 Meg., ½ watt)	33-520143	.20
㉟	Compensator (2nd I.F. Pri., 460 K.C.)	Part of ㊱	
㊱	2nd I.F. Transformer	32-2050	3.00
㊲	Compensator (2nd I.F. Sec. 460 K.C.)	Part of ㊱	
㊳	Condenser (110 Mmfd., Twin Bakelite)	8035-ODU	.25
㊴	Condenser (110 Mmfd.)	Part of ㊳	
㊵	Resistor (51,000 ohms, ½ watt)	33-351143	.20
㊶	Condenser (400 Mmfd., Mica)	30-1049	.25
㊷	Resistor (25,000 ohms, ½ watt)	33-325344	.20
㊸	Resistor (12,000 ohms, ½ watt)	33-312334	.20
㊹	Condenser (.01 Mfd. Tubular)	30-4124	.25
㊺	Volume Control Assy. (500,000 ohms)	38-7630	1.45
㊻	Condenser (.01 Mfd. Tubular)	30-4124	.25
㊼	Resistor (1.0 Meg., ½ watt)	33-510143	$0.20
㊽	Bias Cell (1.0 volt)	41-6069	.20
㊾	Eliminated By Production Changes		
㊿	Resistor (70,000 ohms, ½ watt)	33-370133	.20
(51)	Resistor (240,000 ohms, ½ watt)	33-424344	.20
(52)	Condenser (0.1 Mfd.)	Part of (53)	
(53)	Condenser (.01 Mfd. Tubular)	30-4169	.20
(54)	Resistor (490,000 ohms, ½ watt)	33-449344	.20
(55)	Resistor (400 ohms, wire wound)	33-3122	.25
(56)	Elec. Condensers (10.0 Mfd., 8.0 Mfd., 16.0 Mfd., 16 Mfd.)	30-2154	3.25
(57)	Condenser (.01 Mfd. Bakelite)	3003-OSU	.25
(58)	Output Transformer	32-7568	.95
(59)	Core Assy.	36-3029	.60
(60)	Field Coil Assy.	36-3620	2.75
(61)	Filter Choke	32-7569	1.30
(62)	Filter Choke	32-7572	1.00
(63)	Condenser (.05 Mfd. Tubular)	30-4020	.20
(64)	B. C. Resistor (15 133 ohms)	33-3235	.55
	R. F. Coil Housing	29-3755	.15
	R. F. Coil Housing, Side	29-3770	.10
	R. F. Coil Housing, Back	29-3814	.05
	Bias Cell Panel Assy.	38-7436	.15
	B. C. Resistor Mtg. Screw	W-458-A	.04C
	B. C. Resistor Mtg. Nut	W-95-A	.04C
	Tube Shield Body	28-2726	.10
	Tube Shield Base	28-2725	.03
	Socket (6-prong)	27-6936	.11
	Socket (7-prong)	27-6937	.11
	Volume Control Mtg. Nut	W-684-A	1.25C
	Volume Control Shaft	Part of (53)	
	Wave Switch Shaft	Part of (4)	
	Dial Assembly	31-1799	
	Shaft Centering Plate	29-3885	.10
	Pilot Lamp Bracket Assy.	38-7616	.15
	Chassis Mtg. Screw	W-1567-A	.75C
	Chassis Mtg. Nut	W-124-A	.35C
	Chassis Mtg. Washer	W-151	.20C
	Chassis Mtg. Washer	W-1335	.80C
	Chassis Mtg. Washer	W-391	.40C
	Knob (Tuning)	27-4206	.12
	Knob (Slow Speed Tuning)	27-4207	.10
	Knob (Wave Band Switch, Vol. Control)	27-4208	.10
	Shield Plate Assy.	29-3769	.40
	Shield Plate Ins.	27-8214	1.15
	Baffle Assy.	40-3918	

PRICES SUBJECT TO CHANGE WITHOUT NOTICE

©John F. Rider, Publisher

PHILCO RADIO & TELEV. CORP.

MODEL 604
Schematic

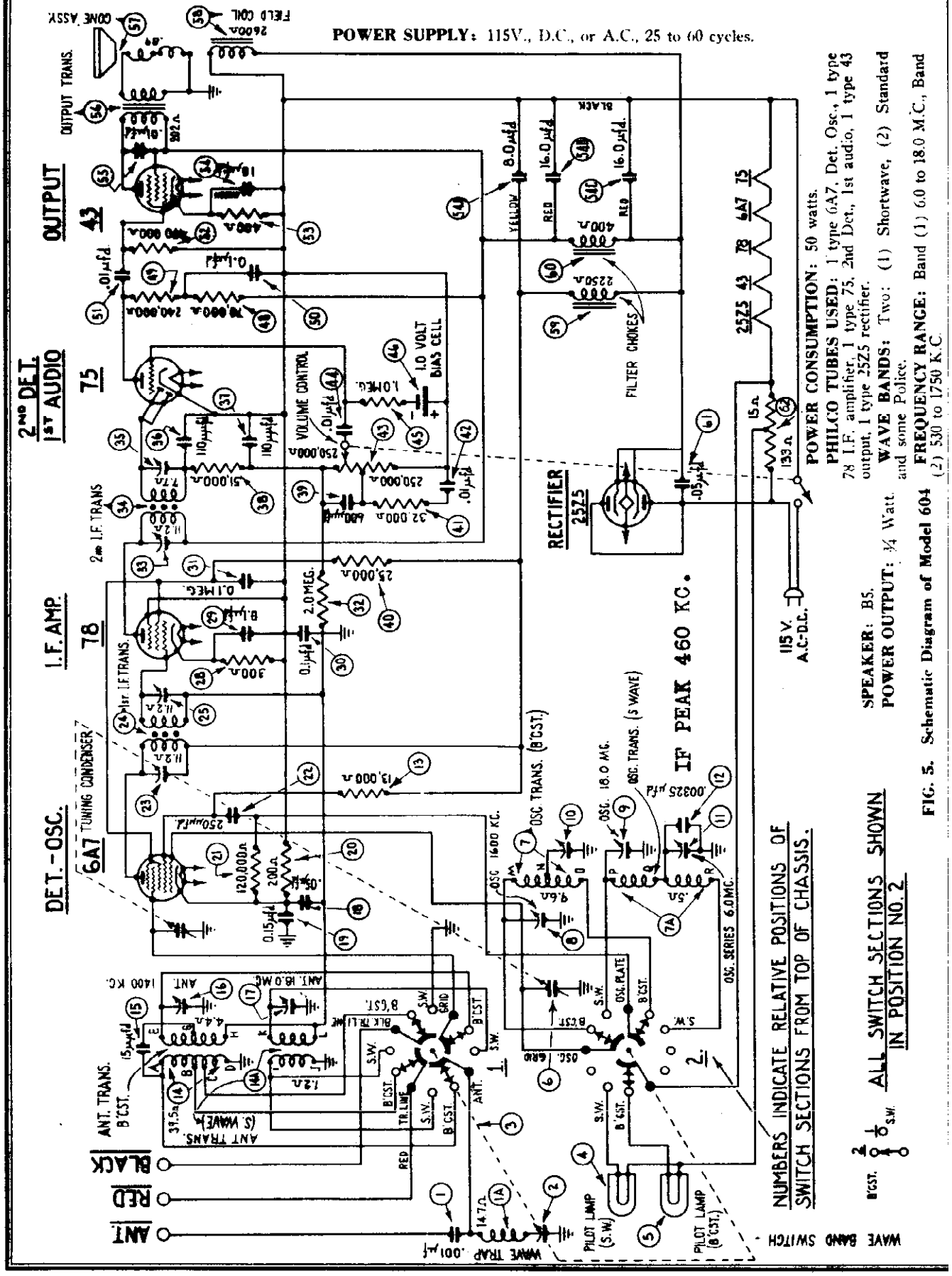

POWER CONSUMPTION: 50 watts.
PHILCO TUBES USED: 1 type 6A7, Det. Osc., 1 type 78 I.F. amplifier, 1 type 75, 2nd Det., 1st audio, 1 type 43 output, 1 type 2525 rectifier.
WAVE BANDS: Two: (1) Shortwave, (2) Standard and some Police.
SPEAKER: B5.
POWER OUTPUT: ¾ Watt.
FREQUENCY RANGE: Band (1) 6.0 to 18.0 M.C., Band (2) 530 to 1750 K.C.

FIG. 5. Schematic Diagram of Model 604

©John F. Rider, Publisher

MODEL 604
Trimmers
Coils
Alignment

PHILCO RADIO & TELEV. CORP.

Adjusting Compensating Condensers

Adjustment of compensating condensers in Model 604 requires an accurate signal generator covering I.F., and standard-wave frequencies. The **PHILCO Model 088 All-Wave Signal Generator,** having a continuous range of from 100 to 20,000 K.C., is ideal for this purpose.

An output meter is also needed. **PHILCO Model 025 Circuit Tester** includes a high grade output meter.

Philco No. 3164 fibre wrench and No. 27-7059 fibre-handled screwdriver complete the equipment needed for making these adjustments. The locations of the various compensating condensers are shown in Fig. 4. Connect the output meter to the plate and cathode contacts of the type 43 power tube (using the adapters provided with the "025") and set it at the 0-30 volt range.

INTERMEDIATE FREQUENCY: Turn the condenser gang all the way in (maximum capacity) and set the volume control of Receiver at maximum (clockwise). Connect the 088 signal generator antenna lead to the grid of the 78 I.F. tube through a .00025 mf. condenser and the ground lead to the chassis of the receiver. Set the 088 signal generator attenuator for approximately ¼ scale reading on output meter. Adjust condensers ㉕ and ㉓ for maximum output meter reading.

Remove the 088 signal generator antenna lead from the grid of the 78 and connect it to the grid of the 6A7, adjust condensers ㉝ and ㉟ for maximum output meter reading.

WAVE TRAP: Connect the 088 signal generator antenna lead to the aerial post of receiver. Adjust condenser ② for *minimum* output meter reading.

SHORT WAVE: In adjusting the short wave or high frequency band, the det. compensator will have a tendency to "pull" or **change** the frequency of the oscillator. By shunting a padding or variable condenser (about .00025 Mf.) across the oscillator section of the gang (bottom section) and tuning it so that the second harmonic, instead of the fundamental, beats with the incoming signal, this "pull" can be minimized. The procedure for tuning this band is as follows:

Set the dial of the receiver at 18 megacycles (top scale) and the 088 dial at the same frequency. Turn wave band switch to position 1 (extreme right). Connect the shunt condenser to the oscillator section of the gang and tune it so that the second harmonic of the oscillator beats with the 18 M.C. signal from the 088. Next tune condenser ⑰ (antenna) for maximum reading of the output meter. Disconnect shunt condenser and tune condenser ⑨ (osc.) for correct dial calibration. The receiver, oscillator frequency, when correctly adjusted, will be higher than that of the incoming signal. In order to check this it should be possible to pick up the 18 M.C. 088 oscillator signal as an image signal by increasing the 088 output and tuning the receiver to approximately 17.1 M.C.

For the low frequency adjustment of this band, turn the dial to 6.0 M.C., set the signal generator at 6.0 M.C. and adjust condenser ⑪ (nut) for maximum output meter reading. Readjust condenser ⑨ at 18.0 M.C.

STANDARD AND POLICE: Turn wave band switch to position 2 (extreme left), set signal generator at 800 K.C. and dial of receiver at 1600 K.C. (using second harmonic of Signal Generator). Now adjust the oscillator and antenna "standard" condensers. These are ⑧ and ⑯ respectively. Turn dial of receiver and Signal Generator to 1400 K.C., and readjust condenser ⑯.

Turn the dial of receiver to 58, set signal generator at 580 K.C. and adjust condenser ⑩, (oscillator standard series), (screw) for maximum output meter reading.

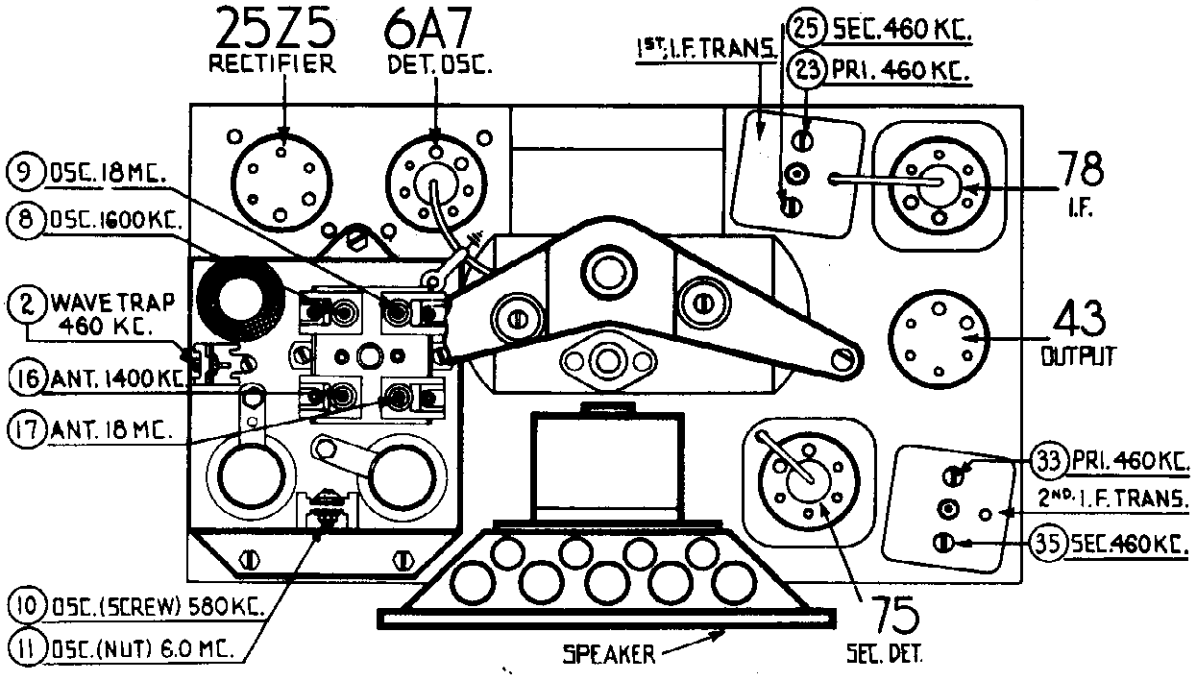

FIG. 4. Location of Compensating Condensers

The letters appearing on the terminals of the transformers below, correspond to those shown on the schematic diagram, Fig. 5.

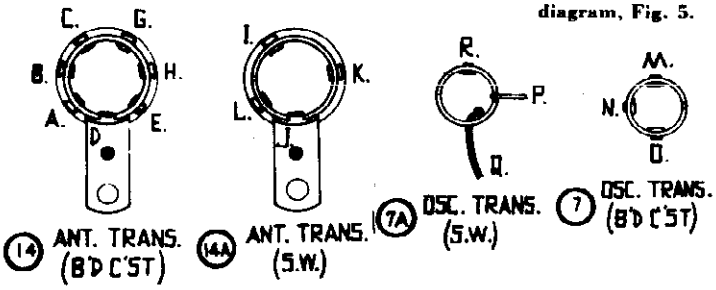

FIG. 1. R.F. Transformers

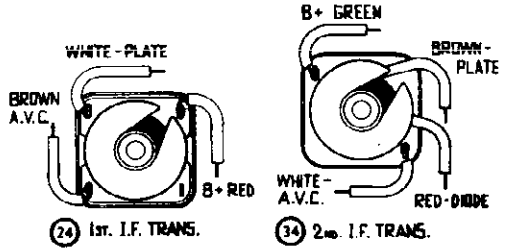

FIG. 2. I.F. Transformers

©John F. Rider, Publisher

PHILCO RADIO & TELEV. CORP.

MODELS 610, 610PF
2nd Type
Schematic

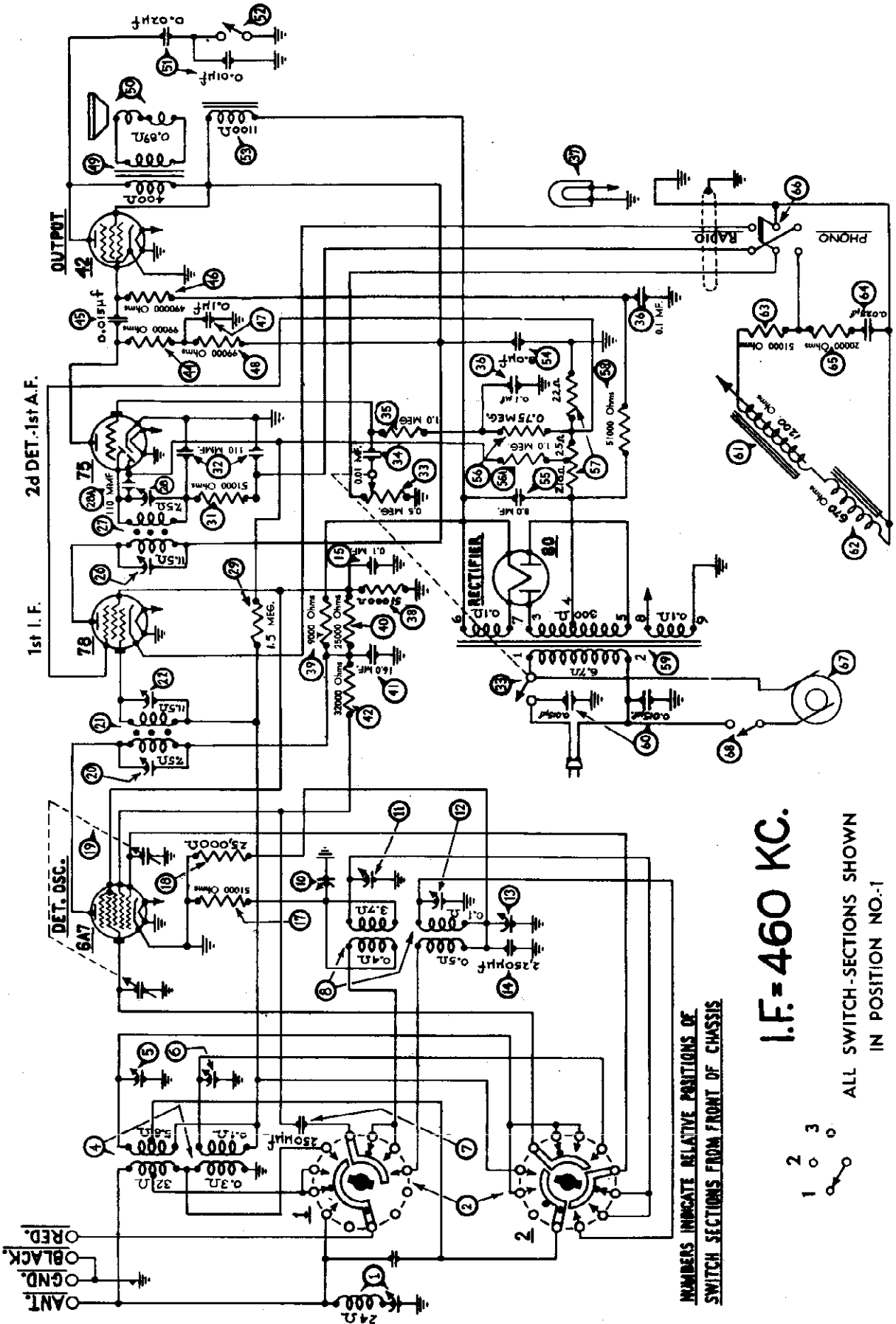

©John F. Rider, Publisher

MODELS 610,610PF
Changes,Parts

PHILCO RADIO & TELEV. CORP.

Later 1935 Production Runs

This sheet supplements the regular bulletin No. 217 on the Philco 610 and also covers the Philco Radio-Phonograph 610PF. All circuit and part number changes up to date have been included.

Beginning with run No. 9 the grid bias arrangement for the 6A7 1st detector and 78 I.F. was changed. A fixed bias from the B.C. resistor is fed through the AVC circuit to the grids of these tubes.

Beginning with run No. 11 the oscillator circuit was changed to series feed to eliminate possibilities of failure at 6.0 mc.

Beginning with run No. 14 the dial mask assembly was changed to the glowing arrow wave band indicator type.

PARTS LIST

	Description	Part No.	List Price
①	Wavetrap	38-6777	$1.00
②	Waveband Switch	42-1152	1.75
③	Antenna Transformer	32-1669	1.15
⑤	Compensating Condenser (Antenna, Standard)	Part of 31-6047	.50
⑥	Compensating Condenser (Antenna, S.W.)	Part of 31-6047	.50
⑦	Condenser (.00025 Mfd. Mica)	30-1032	.20
⑧	Oscillator Transformer	32-1973	1.00
⑩	Compensating Condenser (Osc. L.F. Standard) (Screw)	Part of 31-6027	.70
⑫	Compensating Condenser (Osc. H.F., Standard)	Part of 31-6047	.50
⑬	Compensating Condenser (Osc. S.W., H.F. End)	Part of 31-6047	.50
⑭	Compensating Condenser (Osc. S.W., L.F. End) (Nut)	Part of 31-6027	.70
⑭	Condenser (.00225 Mfd. Mica)	30-1055	.40
⑪	Resistor (50000 ohms) (Green, Brown, Orange)	6098	.20
⑩	Resistor (25000 ohms) (Red, Green, Orange)	33-1013	.20
⑮	Tuning Condenser Assembly	31-1740	....
⑯	Compensating Condenser (1st I.F. Primary)	Part of ⑰	....
⑰	1st I.F. Transformer	32-1671	1.35
⑱	Compensating Condenser (1st I.F. Secondary)	Part of ⑰	....
⑲	Condenser (.05 Mfd. Tubular)	30-4020	.35
⑳	Compensating Condenser (2nd I.F. Primary)	Part of ㉑	....
㉑	2nd I.F. Transformer	32-1672	1.35
㉒	Compensating Condenser (2nd I.F. Secondary)	Part of ㉑	....
㉓	Resistor (2 Megs.) (Red, Black, Green)	33-1188	.20
㉔	Resistor (50000 ohms) (Green, Brown, Orange)	6098	.20
㉕	Condenser (.00011 Twin Bakelite Block)	8035-DG	.25
㉖	Volume Control & On-Off Switch	33-5106	1.45
㉗	Condenser (.01 Mfd. Bakelite Block)	3903-SU	.25
㉘	Resistor (1 Meg.) (Brown, Black, Green)	33-1096	.20
㉙	Condenser (.1 Mfd. Twin Bakelite Block)	4989-DG	.40
㉚	Pilot Lamp	34-2039	.09
㉛	Resistor (50000 ohms) (Green, Brown, Orange)	4237	.20
㉜	Resistor (9000 ohms) (Black, White, Orange)	33-1215	.20
㉝	Resistor (25000 ohms) (Red, Green, Orange)	3656	.20
㉞	Condenser (Electrolytic—16 Mfd.)	30-2118	1.65
㉟	Resistor (32000 ohms) (Orange, Red, Orange)	5279	.20
㊱	Resistor (.1 Meg.) (Brown, Black, Green)	6099	.20
㊲	Condenser (.015 Mfd. Bakelite Block)	3793-SU	.35
㊳	Resistor (.5 Meg.) (Yellow, White, Yellow)	6097	.20

	Description	Part No.	List Price
㊴	Condenser (.1 Mfd. Tubular)	30-4170	$0.35
㊵	Resistor (.1 Meg.) (White, White, Yellow)	6099	.20
㊶	Output Transformer	32-7019	1.25
㊷	Cone & Voice Coil Assembly (P-27 Speaker)	02861	.65
㊸	Condensers (in Tone Control)	Part of ㊹	....
㊹	Tone Control	30-4318	.50
㊺	Field Coil & Pot Assembly (P-27 Speaker)	36-3341	2.75
㊻	Condenser (Electrolytic—8 Mfd.)	30-2025	1.35
㊼	Resistor (750000 ohms) (Violet, Green, Yellow) (½ Watt)	33-1203	.20
㊽	Condenser (Electrolytic) (8 Mfd.)	30-2025	1.35
㊾a	Resistor (1. Megohm) (Brown, Black, Green)	33-1096	.20
㊾	Resistor (B.C. Wire-wound, 22 ohms, 25 ohms, 210 ohms)	33-3222	.20
㊿	Resistor (50000 ohms) (Green, Brown, Orange)	6098	.20
(51)	Power Transformer (110 volts, 60 cycles)	32-7381	4.00
	(110 volts, 25 cycles)	32-7382	6.25
	(230 volts, 50 cycles)	32-7383	4.50
(52)	Condenser (.015 Mfd. Twin Bakelite Block)	3793-DG	.40
(53)	Pickup Head	35-2014	7.25
(54)	Hum Bucking Coil	32-1940	1.10
(55)	Resistor (51,000 ohm)	6098	.20
(56)	Resistor (20,000 ohm)	33-1178	.20
(57)	Condenser (.025 mf.)	7653-SU	.35
(58)	Phono. Radio Switch & Cable Assy.	35-3014	1.30
(59)	Phono. Radio Motor (115 V., 60 cycles)	35-1116	18.00
(60)	Phono. Radio Motor Switch	4535	.75
	Glowing Arrow Mask	27-5163	.20
	Glowing Arrow Screen	27-5161	.10
	Mask Arm	29-3274	....
	Link	29-3285	.04
	Coupling	29-3586	.10
	Screen Bracket Assy.	31-1745	....
	Dial Mask	27-5137	.15
	Dial Assembly	31-1539	.30
	Tube Shield Body	28-2726	.10
	Tube Shield Base	28-2725	.03
	Four Prong Socket	27-6034	.10
	Six Prong Socket	27-6036	.11
	Seven Prong Socket	27-6037	.11
	Knob (Station Selector)	27-4206	.12
	Knob (Fine Tuning)	27-4207	.10
	Knob (Volume, Waveband and Tone Control)	27-4208	.10
	Bezel	28-2928	.35
	Bezel Glass	27-7887	.60

PRICES SUBJECT TO CHANGE WITHOUT NOTICE

©John F. Rider, Publisher

PHILCO RADIO & TELEV. CORP.

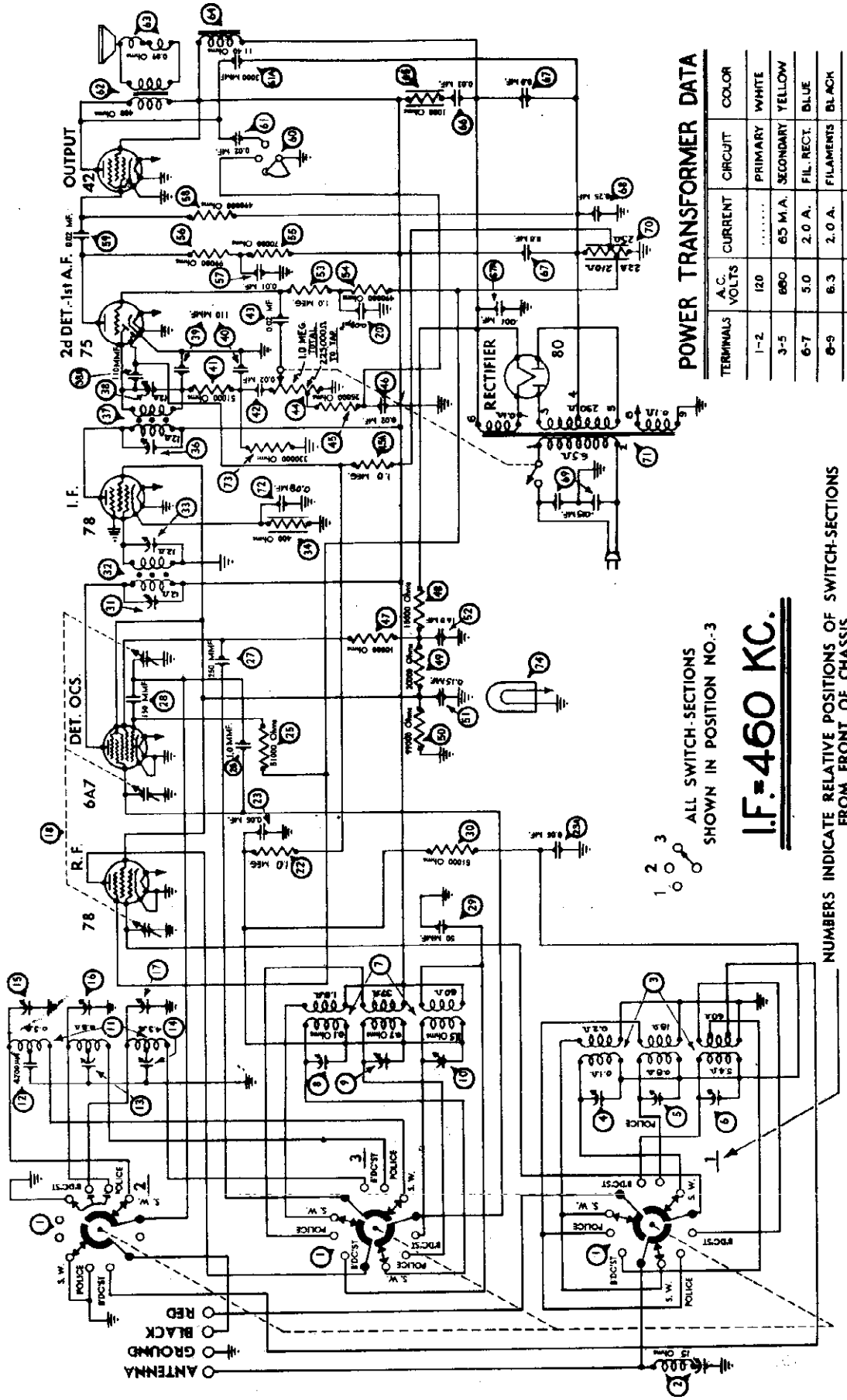

POWER TRANSFORMER DATA

TERMINALS	A.C. VOLTS	CURRENT	CIRCUIT	COLOR
1-2	120	.....	PRIMARY	WHITE
3-5	680	65 M.A.	SECONDARY	YELLOW
6-7	5.0	2.0 A.	FIL. RECT.	BLUE
8-9	6.3	2.0 A.	FILAMENTS	BLACK
4	...	.....	CENTER TAP OF 3-5	YELLOW, GREEN TRACER

MODEL 620
Changes, Parts

PHILCO RADIO & TELEV. CORP.

Later 1935 Production Runs

This sheet supplements the regular bulletin No. 218 on the Philco Model 620. All circuit and part number changes up to date have been included.

Beginning with run No. 7 the grid bias arrangement for the 78 R.F. and 6A7 1st detector was changed. A fixed bias from the B.C. resistor is fed through the AVC circuit to the grids of these tubes. The oscillator circuit was changed to series feed to eliminate possibilities of failure at 6.0 mc.

PARTS LIST

	Description	Part No.	Price List
①	Waveband Switch	42-1152	$1.75
②	Wavetrap	38-6850	1.10
③	Antenna Transformer	32-1699	3.00
④	Compensating Condenser (Ant. S.W.)	Part of ⑧	....
⑤	Compensating Condenser (Ant. Police)	Part of ⑧	....
⑥	Compensating Condenser (Ant. Standard)	Part of ⑧	....
⑦	R. F. Transformer	32-1636	3.25
⑧	Compensating Condenser (R.F. Short-Wave)	Part of ⑦	....
⑨	Compensating Condenser (R.F. Police)	Part of ⑦	....
⑩	Compensating Condenser (R.F. Standard)	Part of ⑦	....
⑪	Oscillator Transformer	32-1637	2.50
⑫	Condenser (.0047 Mfd. Mica)	30-1052	.60
⑬	Compensating Condenser (Osc. Police)	Part of ⑪	....
⑭	Compensating Condenser (Osc. H.F. Standard)	Part of ⑪	....
⑮	Compensating Condenser (Osc. S.W.)	Part of ⑪	....
⑯	Compensating Condenser (Osc. L.F. Police) Part of	31-6027	.70
⑰	Compensating Condenser (Osc. L.F. Standard) Part of	31-6027	
⑱	Tuning Condenser Assembly	31-1741	....
⑲	Condenser (.09 Mfd. Twin Bakelite Block)	4989-DG	.40
⑳	Resistor (1. Meg.) (Red, Black, Green)	33-1096	.20
㉑	Condenser (.05 Mfd. Tubular)	30-4020	.35
㉑a	Condenser (.05 Mfd. Tubular)	30-4020	.35
㉒	Resistor (50000 ohms) (Green, Brown, Orange)	6098	.20
㉓	Condenser (1 Mmfd.)	Part of ⑲	....
㉔	Condenser (.00025 Mfd. Mica)	30-1032	.35
㉕	Condenser (.00015 Mfd. Mica)	30-1033	.35
㉖	Condenser (.00005 Mfd. Mica)	30-1029	.35
㉗	Resistor (51,000 ohms) (Green, Brown, Orange)	6098	.20
㉘	Compensating Condenser (1st I.F. Primary)	Part of ㉙	....
㉙	1st I.F. Transformer	32-1646	2.25
㉚	Compensating Condenser (1st I.F. Secondary)	Part of ㉙	....
㉛	Resistor (400 ohms Flexible) (Yellow, Black, Brown)	33-3016	.20
㉜	Compensating Condenser (2nd I.F. Pri.)	Part of ㉝	....
㉝	2nd I.F. Transformer	32-1647	2.25
㉞	Compensating Condenser (2nd I.F. Sec.)	Part of ㉝	....
㉞a	Condenser (.00011 Mfd. Mica)	30-1031	.35
㉟	Condenser (.00011 Mfd. (Twin Bakelite)	8035-DG	.25
㊱	Condenser (.00011 Mfd. Mica)	Part of ㉟	....
㊲	Resistor (50000 ohms) (Green, Brown, Orange)	6098	.20
㊳	Condenser (.02 Mfd. Tubular)	30-4215	.30
㊴	Condenser (.02 Mfd. Tubular)	30-4215	.30
㊵	Volume Control and On-Off Switch	33-5105	1.45
㊶	Resistor (25000 ohms) (Red, Green, Orange)	33-1013	.20
㊶a	Resistor (1. Meg.) (Brown, Black, Green)	33-1096	.20
㊷	Condenser (.02 Mfd. Tubular)	30-4215	.30
㊸	Resistor (10000 ohms) (Brown, Black, Orange)	4412	.20
㊹	Resistor (15000 ohms) (Brown, Green, Orange)	5718	.35
㊺	Resistor (20000 ohms) (Red, Black, Orange)	6649	.20
㊻	Resistor (99000 ohms) (White, White, Yellow)	6099	$0.20
㊼	Condenser (.15 Mfd. Tubular)	30-4191	.35
㊽	Condenser (16 Mfd. Electrolytic)	30-2118	1.65
㊾	Resistor (1 Meg.) (Brown, Black, Green)	33-1096	.20
㊿	Resistor (.5 Meg.) (Yellow, White, Yellow)	6097	.20
(51)	Resistor (70000 ohms) (Violet, Black, Orange)	33-1115	.20
(52)	Resistor (99000 ohms) (White, White, Yellow)	6099	.20
(53)	Condenser (.09 Mf.)	4989-SG	.35
(54)	Resistor (.5 meg.) (Yellow, White, Yellow)	6097	.20
(55)	Condenser (.03 Mfd. Bakelite)	8318-SU	.35
(56)	Tone Control	30-4316	.75
(57)	Condenser in Tone Control	Part of (56)	....
(57)a	Condenser (.003 Mfd. Tubular)	30-4042	.25
(58)	Output Transformer	32-7019	1.25
(59)	Voice Coil & Cone Assembly (S-14 Speaker)	36-3157	.80
(60)	Field Coil & Pot Assembly (S-14 Speaker)	36-3495	2.75
(61)	Resistor (1000 ohms) (Brown, Black, Red)	33-1028	.20
(62)	Condenser (.3 Mfd. Bakelite Block)	6287-DU	.40
(63)	Condenser (8 Mfd. & 8 Mfd. Electrolytic)	30-2079	2.40
(63)a	Condenser (.001 Mf.)	30-4310	.25
(64)	Condenser (.25 Mfd. Tubular)	30-4146	.40
(65)	Condenser (.015 Mfd. Bakelite Block)	3793-DG	.40
(66)	Resistor (BC Wirewound, 22 ohms, 25 ohms, 210 ohms)	33-3222	.20
(67)	Power Transformer (115 Volts 60 Cycles)	32-7381	4.00
	(115 Volts 25 Cycles)	32-7382	6.25
	(230 Volts 50 Cycles)	33-7383	4.50
(68)	Condenser (.1 Mfd. Tubular)	Part of (63)	....
(69)	Resistor (330,000 ohms) (Orange, Orange, Yellow)	33-1200	.20
(70)	Pilot Lamp	34-2064	.09
	Dial Scale	27-5098	.25
	Dial Hub and Set Screw	31-1550	.15
	Dial Front Spring	28-2837	.10
	Knob (Station Selector)	27-4206	.12
	Knob (Fine Tuning)	27-4207	.10
	Knob (Waveband)	27-4219	.10
	Knob (Tone, Volume)	27-4208	.10
	Tube Shield	28-2726	.10
	Tube Shield Base	28-2725	.03
	Tube Socket (4 Prong)	27-6034	.10
	Tube Socket (6 Prong)	27-6036	.11
	Tube Socket (7 Prong)	27-6037	.11
	Speaker Plug Socket	27-6633	.08
	Chassis Mtg. Screw	W-1495	1.50perC.
	Chassis Mtg. Washer (Rubber)	27-4198	.01
	Electric Cord and Plug	L-943-A	.60
	Bezel	28-2928	.35
	Bezel Glass	27-7887	.60

PRICES SUBJECT TO CHANGE WITHOUT NOTICE

©John F. Rider, Publisher

PHILCO RADIO & TELEV. CORP.

MODEL 624
Schematic

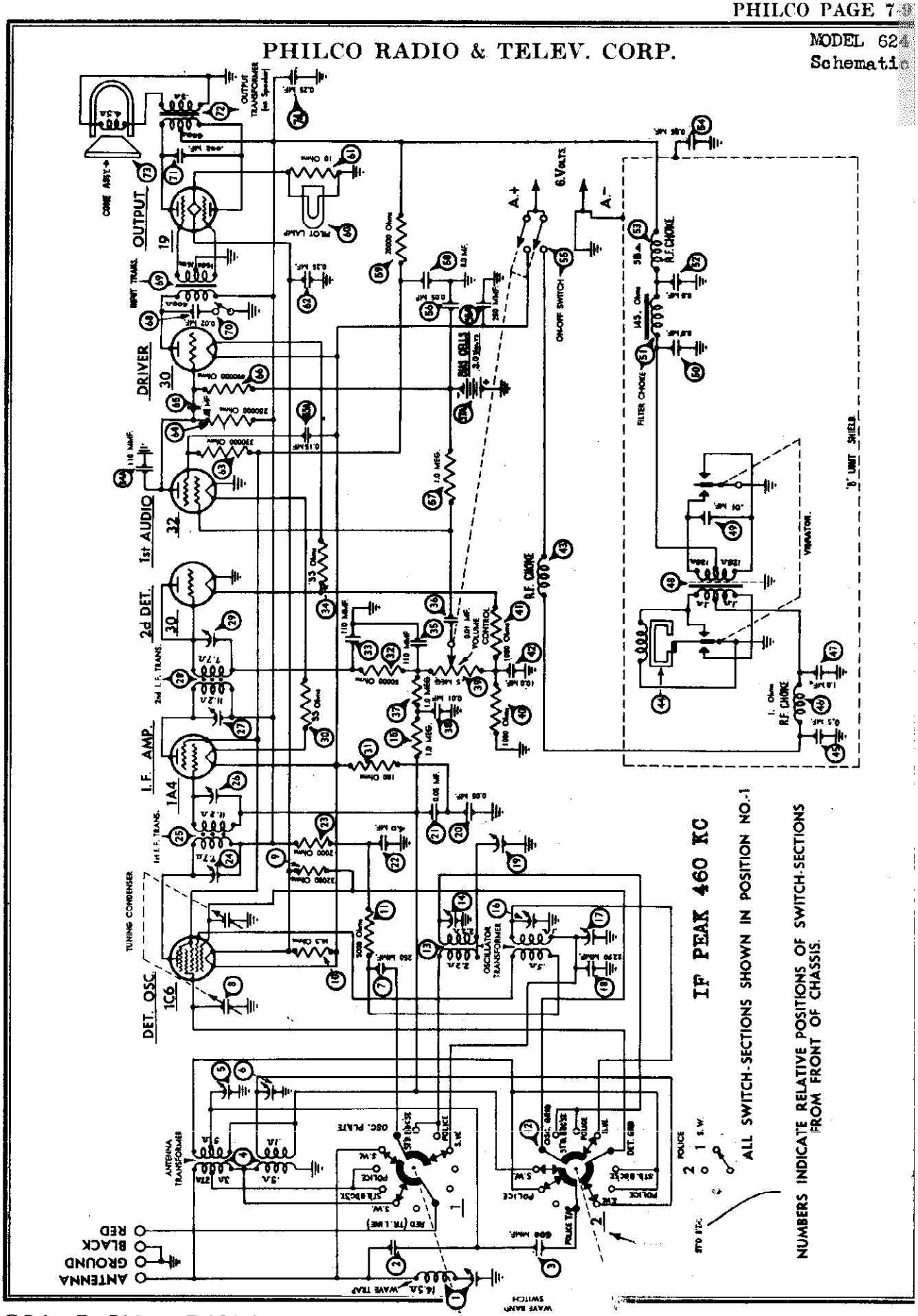

©John F. Rider, Publisher

MODEL 624
Voltage, Socket
Trimmers, Alignment

PHILCO RADIO & TELEV. CORP.

Adjusting Compensating Condensers

Adjustment of compensating condensers in Model 624 requires an accurate signal generator covering I.F., standard-wave, police and short-wave frequencies. The **PHILCO Model 088 All-Wave Signal Generator**, having a continuous range of from 100 to 20,000 K.C., is ideal for this purpose.

An output meter is also needed. **PHILCO Model 025 Circuit Tester** includes a high grade output meter.

Philco No. 3164 fibre wrench and No. 27-7059 fibre-handled screwdriver complete the equipment needed for making these adjustments. The locations of the various compensating condensers are shown in Fig. 2. Connect the output meter to the plate and cathode contacts of the type 30 driver tube (using the adapters provided with the "025") and set it at the 0-30 volt range.

Set the signal generator at 460 K.C. with attenuator set at minimum, and attach its antenna lead to the grid cap of the 1A4 I.F. amplifier tube. Connect ground lead to ground terminal on set or some part of chassis. Set the dial at 55 and turn the waveband switch to position 3 (extreme left). Adjust the volume control of set to almost maximum (just before oscillator hiss becomes noticeable), and the 088 attenuator so that about one-fourth (¼) scale reading is had on the output meter. With a fibre screw-driver adjust condensers ㉗ and ㉘ (2nd I.F.) for maximum reading on output meter. Turn attenuator of signal generator to minimum and remove its antenna lead from the grid of the 1A4 I.F. tube. Place it on the grid of the 1C6, removing grid lead. Adjust 088 attenuator as before, then proceed to adjust condensers ㉕ and ㉖ (1st I.F.) for maximum output meter reading. Then remove the 088 oscillator lead and replace grid connection. Care should be taken to keep the output meter reading during adjustments at about one-fourth scale reading. This should be done by using the 088 attenuator control.

Connect the Signal Generator antenna and ground leads to the antenna and ground posts of the set. With the signal generator operating at 460 K.C. and the set controls adjusted as before for I.F. alignment, adjust wavetrap ① until a minimum reading is obtained on the output meter.

SHORT WAVE

In adjusting the short wave or high frequency band, the R.F. compensator will have a tendency to "pull" or change the frequency of the oscillator. By shunting a compensating or variable condenser (about .00025 Mf.) across the oscillator section of the gang (front section) and tuning it so that the second harmonic, instead of the fundamental, beats with the incoming signal, this "pull" can be minimized. The procedure for tuning this band is as follows:

Set the dial of the receiver at 18 megacycles (top scale) and the 088 dial at the same frequency. Turn wave band switch to position 1 (extreme right). Connect the shunt condenser to the oscillator section of the gang and tune it so that the second harmonic of the oscillator beats with the 18 M.C. signal from the 088. Next tune condenser ⑯ (antenna) for maximum reading of the output meter. Disconnect shunt condenser and tune condenser ⑱ (osc.) for correct dial calibration. The oscillator frequency, when correctly set, will be higher than that of the incoming signal and the image frequency lower. In order to check this it should be possible to tune the image at approximately 17.1 M.C. by increasing the input from the 088 oscillator.

For the low frequency adjustment of this band, turn the dial to 6.0 M.C., set the signal generator at 6.0 M.C. and adjust condenser ⑰ (nut) for maximum output meter reading. Readjust condenser ⑱ at 18.0 M.C.

STANDARD WAVE: Turn waveband switch to position 3 (standard broadcast), set signal generator at 1500 and dial of set at 150. Now adjust the oscillator and antenna "Standard" condensers for maximum output meter reading. These are ⑲ and ⑤, respectively.

Now turn the dial to 60, set signal generator at 600 and adjust condenser ⑲ (oscillator standard and police series) (screw) for maximum output meter reading.

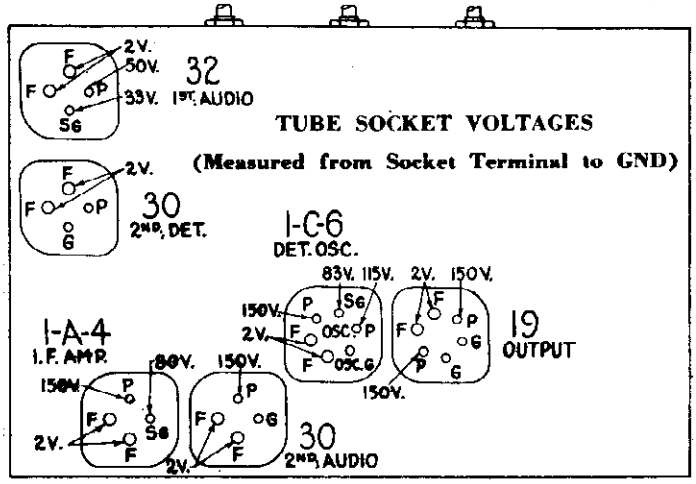

Fig. 1. Bottom View of Sockets, Showing Voltages

The voltages at the points indicated by the arrows above were obtained with a Philco type 025 Circuit Tester which contains a high resistance (1000 ohms per volt) voltmeter. Volume control at minimum, waveband switch at standard broadcast. KR-12 speaker.

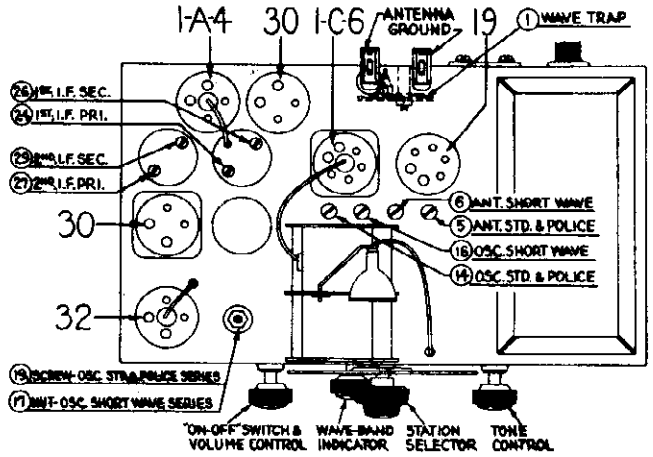

Fig. 2. Location of Compensating Condensers

Description

Philco Model 624 is a new type receiver designed to operate entirely from a 6-volt storage battery. Through a specially designed vibrator and power supply, the 6 volts from the storage battery is stepped up to the necessary "B" voltage for the plate and screen grid of the tubes. The correct filament voltages are obtained by using a series resistor arrangement.

TYPE CIRCUIT: Superheterodyne, with Class B output; built in connections for Philco all-wave aerial; aerial selector built into and operated by wave-band switch.

POWER SUPPLY: Battery operated; Model 624 uses a 6-volt 125-ampere-hour storage battery (Philco 110-R).

WAVE BANDS: Three—(1) Short Wave; (2) Police; (3) Standard.

COVERAGE OF EACH BAND: Band 1, 5700–18,000 K.C. (5.7 to 18.0 megacycles); Band 2, 2300–2500 K.C. (2.3–2.5 megacycles); Band 3, 530–1720 K.C.

TUNING DRIVE: Dual gear drive, ball bearing. 50 to 1 ratio for slow-speed tuning, 6 to 1 on main shaft.

TONE CONTROL: 2-Position.
INTERMEDIATE FREQUENCY: 460 K.C.
CURRENT CONSUMPTION: A battery, 1.5A.
SPEAKER: KR-12, Permanent Magnet Dynamic.

©John F. Rider, Publisher

MODEL 624
Chassis
Parts Lis

PHILCO RADIO & TELEV. CORP.

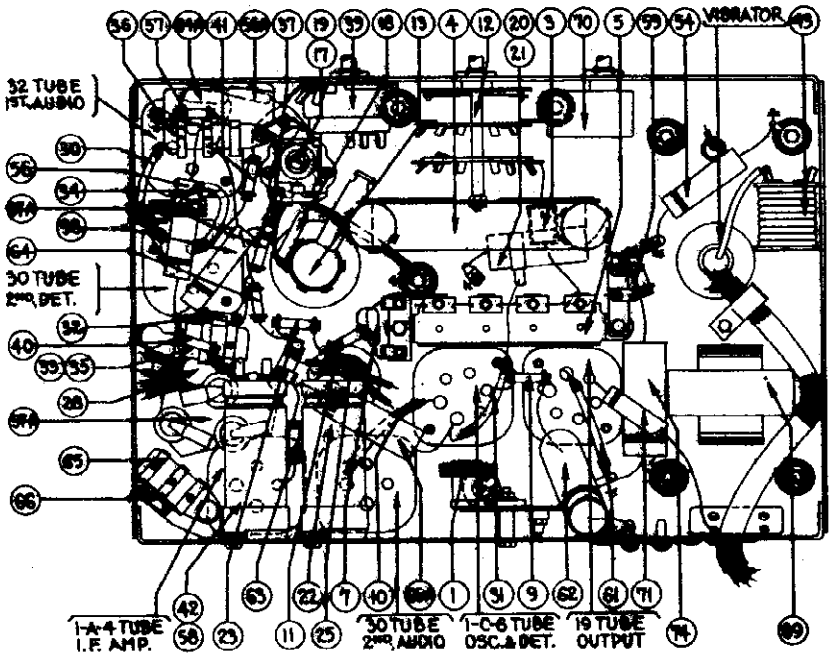

Fig. 4. Base View

Replacement Parts—Model 624

Schematic Number	Part and Description	Part No.	List Price
①	Wave Trap	38-6850	$1.10
②	Condenser (Leads twisted together)	....	....
③	Condenser (.0006 Mf. mica)	30-1049	.25
④	Aerial Transformer	32-1669	1.15
⑤	Compensator (Antenna Standard & Police)	31-6047	.50
⑥	Compensator (Antenna Short Wave)	Part of ③	....
⑦	Condenser (.00025 Mf. mica)	30-1032	.25
⑧	Tuning Condenser	31-1740	....
⑨	Resistor (32,000 ohms)	33-1208	.20
⑩	Resistor (14.3 ohms wire wound)	33-3232	.20
⑪	Resistor (5,000 ohms)	6096	.20
⑫	Wave Band Switch	42-1151	1.20
⑬	Oscillator Transformer	32-1973	1.00
⑭	Compensator (Oscillator Standard & Police)	Part of ③	....
⑮	Resistor (40,000 ohms, ¼ watt)	33-1180	.20
⑯	Compensator (Oscillator Short Wave)	Part of ③	....
⑰	Compensator (Nut) (Osc. Short Wave Series)	31-6027	.70
⑱	Condenser (2250 Mmf. mica)	30-1055	.40
⑲	Compensator (Screw) (Osc. Standard Series)	Part of ⑮	....
⑳	Condenser (.05 Mf. twin tubular)	30-4394	.35
㉑	Condenser (.05 Mf.)	Part of ㉚	....
㉒	Electrolytic Condenser (4 Mf., 200 V.)	30-2144	1.05
㉓	Resistor (2000 ohms, ¼ watt)	33-1029	.20
㉔	Compensator (Primary 1st I.F.)	Part of ㉕	....
㉕	1st I.F. Transformer	32-1671	1.35
㉖	Compensator (Secondary 1st I.F.)	Part of ㉕	....
㉗	Compensator (Primary 2nd I.F.)	Part of ㉘	....
㉘	2nd I.F. Transformer	32-1672	1.35
㉙	Compensator (Secondary 2nd I.F.)	Part of ㉘	....
㉚	Resistor (33 ohms wire wound)	33-3233	.20
㉛	Resistor (100 ohms wire wound)	33-3187	.20
㉜	Resistor (51,000 ohms, ¼ watt)	6098	.20
㉝	Condenser (.00011 Mf. twin bakelite)	8035-DG	.25
㉞	Resistor (33 ohms wire wound)	33-3233	.20
㉟	Condenser (.00011 Mf.)	Part of ㉞	....
㊱	Condenser (.01 Mf. bakelite)	3903-SU	.25
㊲	Resistor (1 Meg., ¼ watt)	33-1096	.20
㊲A	Resistor (1 Meg., ¼ watt)	33-1096	.20
㊳	Condenser (.01 Mf. tubular)	30-4124	.25
㊴	Volume Control (.5 Meg.)	33-5137	1.45
㊵	Resistor (1000 ohms, ¼ watt)	33-1028	.20
㊶	Resister (1000 ohms, ¼ watt)	33-1028	.20
㊷	Electrolytic Condenser (10 Mf., 8.0 Mf.)	30-2143	1.00
㊸	R.F. Choke	32-1954	.40
㊹	Vibrator Unit	41-2015	....
㊺	Condenser (.5 Mf. metal case)	30-4058	.60
㊻	R.F. Choke	32-1954	.40
㊼	Condenser (1.0 Mf. metal case)	30-4399	.75
㊽	Power Transformer	32-7504	2.75
㊾	Condenser (.01 Mf. tubular)	30-4318	.50
㊿	Electrolytic Condenser (8.0 Mf. twin)	30-2138	2.50
(51)	Filter Choke	32-7543	1.35
(52)	Electrolytic Condenser (8.0 Mf.)	Part of ㊽	....
(53)	R.F. Choke	32-1842	.50
(54)	Condenser (.05 Mf. tubular)	30-4020	.20
(55)	Off-On Switch	Part of ㊽	....

Schematic Number	Part and Description	Part No.	List Price
(56)	Condenser (.05 Mf. tubular)	30-4020	.20
(56)A	Condenser (.00025 Mf. mica)	30-1032	.25
(57)	Resistor (1.0 megohm, ¼ watt)	33-1096	.20
(57)A	Bias Cells Assembly	38-7275	....
(58)	Electrolytic Condenser (8.0 Mf.)	Part of ㊽	....
(59)	Resistor (20,000 ohms, ½ watt)	6650	.20
(60)	Pilot Lamp	34-2065	....
(61)	Resistor (10 ohms wire wound)	33-3041	.20
(62)	Condenser (.25 Mf. tubular)	30-4146	.25
(63)	Resistor (330,000 ohms, ¼ watt)	33-1200	.20
(64)	Resistor (240,000 ohms, ¼ watt)	33-1097	.20
(64)A	Condenser (.00011 Mf. mica)	30-1031	.25
(65)	Condenser (.01 Mf. bakelite)	3903-SU	.25
(65)A	Condenser (.15 Mf. tubular)	30-4191	.25
(66)	Resistor (490,000 ohms, ¼ watt)	6097	.20
(67)	Condenser (.00011 Mf. mica)	30-1031	.25
(68)	Condenser (.02 Mf.)	Part of (69)	....
(69)	Input Transformer	32-7454	1.35
(70)	Tone Control Assembly	30-4391	.50
(71)	Condenser (.002 Mf. tubular)	30-4177	.25
(72)	Output Transformer	32-7503	1.35
(73)	Voice Coil and Cone Assembly	36-3540	....
(74)	Condenser (.25 Mf. tubular)	30-4146	.25
	Wiring Panel (2 lug)	38-5500	....
	Wiring Panel (2 lug)	38-6801	....
	Wiring Panel (1 lug)	38-7178	....
	Wiring Panel (2 lug)	38-5501	....
	Tube Shield Body	28-2726	....
	Tube Shield Base	28-2725	....
	Glowing Arrow Mask	27-5167	....
	Screen	27-5166	....
	Mask Arm	29-3274	....
	Link	29-3285	....
	Coupling	29-3586	....
	Electrolytic Condenser Support	29-1328	....
	Screen Bracket Assembly	31-1751	....
	Dial Scale	27-5163	....
	Hub Assembly	28-7129	....
	Pilot Lamp Bracket Assembly	38-7499	....
	R.F. Shield Assembly	38-6757	....
	Battery Cable	41-3176	....
	Speaker Plug Socket	27-6043	....
	Speaker Terminal Cover	02824	....
	Knob (tuning)	27-4206	....
	Knob (slow-speed tuning)	27-4207	....
	Knob (volume, tone, wave switch)	27-4208	....
	Bezel	28-3163	....
	Bezel Gasket	27-7980	....
	Bezel Glass	27-8112	....
	Bezel Glass Mask	28-3429	....
	Bezel Mounting Screw	W-1494	....
	Speaker Cable	36-3009	....
	Front Bumper	27-4197	2.50
	Chassis Mounting Screw	W-1496-A	....
	Chassis Mounting Washer (rubber)	27-4198	....
	Chassis Mounting Cushion (rubber)	27-4199	....
	Chassis Mounting Sleeve	28-2897	....

PRICES SUBJECT TO CHANGE WITHOUT NOTICE

©John F. Rider, Publisher

MODEL 625
Socket, Chassis
Parts List

PHILCO RADIO & TELEV. CORP.

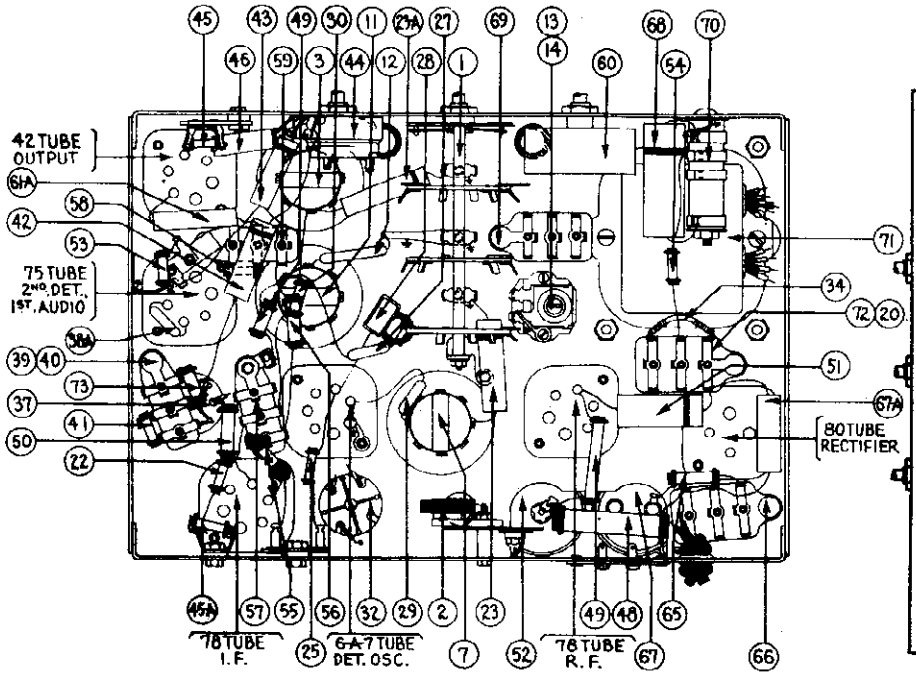

Fig. 4. Bottom View of Chassis

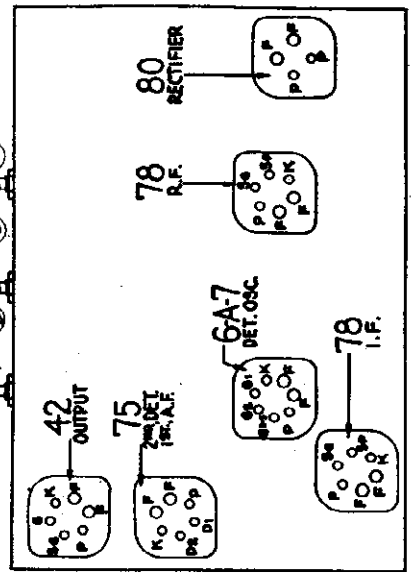

Fig. 1. Tube Sockets as viewed from bottom.

Replacement Parts—Model 625

	Description	Part No.	Price List
①	Waveband Switch	42-1152	$1.75
②	Wavetrap	38-6850	1.10
③	Antenna Transformer	32-1867	3.00
④	Compensater (Ant. S.W.)	Part of ③	....
⑤	Compensater (Ant. Police)	Part of ③	....
⑥	Compensater (Ant. Standard)	Part of ③	....
⑦	R. F. Transformer	32-1868	3.00
⑧	Compensater (R.F. Short-Wave)	Part of ⑦	....
⑨	Compensater (R.F. Police)	Part of ⑦	....
⑩	Compensater (R.F. Standard)	Part of ⑦	....
⑪	Oscillator Transformer	32-1869	2.50
⑫	Condenser (.0047 Mfd. Mica)	30-1052	.60
⑬	Compensater (Osc. Police Series) (Nut)	31-6027	.70
⑭	Compensater (Osc. Standard Series) (Screw)	Part of ⑪	....
⑮	Compensater (Osc. S.W.)	Part of ⑪	....
⑯	Compensater (Osc. Police)	Part of ⑪	....
⑰	Compensater (Osc. Standard)	Part of ⑪	....
⑱	Tuning Condenser Assembly	31-1741	....
⑲	Condenser (.09 Mfd. Twin Bakelite Block)	4989-DG	.40
⑳	Resistor (1. Meg.) (Red, Black, Green)	33-1096	.20
㉑	Condenser (.05 Mfd. Tubular)	30-4020	.35
㉑a	Condenser (.05 Mfd. Tubular)	30-4020	.35
㉒	Resistor (5000 ohms) (Green, Brown, Orange)	6098	.20
㉓	Condenser (1 Mmf.), Wires Twisted	Part of ⑨	....
㉔	Condenser (.00025 Mfd. Mica)	30-1032	.35
㉕	Condenser (.00015 Mfd. Mica)	30-1033	.35
㉖	Condenser (.00005 Mfd. Mica)	30-1029	.35
㉗	Resistor (51,000 ohms) (Green, Brown, Orange)	6098	.20
㉘	Compensater (1st I.F. Primary)	Part of ㉙	....
㉙	1st I.F. Transformer	32-2019	....
㉚	Compensater (1st I.F. Secondary)	Part of ㉙	....
㉛	Resistor (400 ohms Flexible) (Yellow, Black, Brown)	33-3016	.20
㉜	Compensater (2nd I.F. Pri.)	Part of ㉝	....
㉝	2nd I.F. Transformer	32-2020	....
㉞	Compensater (2nd I.F. Sec.)	Part of ㉝	....
㉟a	Condenser (.00011 Mfd. Mica)	30-1031	.35
㉟	Condenser (.00011 Mfd. (Twin Bakelite)	8035-DG	.25
㊱	Condenser (.00011 Mfd. Mica)	Part of ㉟	....
㊲	Resistor (5000 ohms) (Green, Brown, Orange)	6098	.20
㊳	Condenser (.02 Mfd. Tubular)	30-4215	.30
㊴	Condenser (.02 Mfd. Tubular)	30-4215	.30
㊵	Volume Control and On-Off Switch	33-5105	1.45
㊶	Resistor (25000 ohms) (Red, Green, Orange)	33-1013	.20
㊶a	Resistor (1. Meg.) (Brown, Black, Green)	33-1096	.20
㊷	Condenser (.02 Mfd. Tubular)	30-4215	.30
㊸	Resistor (10000 ohms) (Brown, Black, Orange)	33-310334	.20
㊹	Resistor (15000 ohms) (Brown, Green, Orange)	5718	.35
㊺	Resistor (20000 ohms) (Red, Black, Orange)	6649	.20
㊻	Resistor (99000 ohms) (White, White, Yellow)	6099	.20
㊼	Condenser (.15 Mfd. Tubular)	30-4191	.35
㊽	Condenser (16 Mfd. Electrolytic)	30-2118	$1.65
㊾	Resistor (1 Meg.) (Brown, Black, Green)	33-1096	.20
㊿	Resistor (490,000 ohm) (Yellow, White)	6097	.20
(51)	Resistor (70000 ohms) (Violet, Black, Orange)	33-1115	.20
(52)	Resistor (99000 ohms) (White, White, Yellow)	6099	.20
(53)	Condenser (.09 Mf.) (Bakelite)	4989-SG	.35
(54)	Resistor (490,000 ohm) (Yellow, White, Yellow)	6097	.20
(55)	Condenser (.03 Mfd. Bakelite)	8318-SU	.35
(56)	Tone Control	30-4332	.75
(57)	Condenser in Tone Control (.02 Mf.)	Part of (56)	....
(57)a	Condenser (.003 Mfd. Tubular)	30-4042	.25
(58)	Output Transformer	32-7019	1.25
(59)	Voice Coil & Cone Assembly (S-14 Speaker)	36-3157	.80
(60)	Field Coil & Pot Assembly (S-14 Speaker)	36-3495	2.75
(61)	Resistor (1000 ohms) (Brown, Black, Red)	33-1028	.20
(62)	Condenser (.3 Mfd. Bakelite Block)	6287-DU	.40
(63)	Condenser (8 Mfd. & 8 Mfd. Electrolytic)	30-2079	2.40
(63)a	Condenser (.001 Mf.)	30-4310	.25
(64)	Condenser (.25 Mfd. Tubular)	30-4146	.40
(65)	Condenser (.015 Mfd. Twin Bakelite Block)	3793-DG	.40
(66)	Resistor (BC Wirewound, 22 ohms, 25 ohms, 210 ohms)	33-3222	.20
(67)	Power Transformer (115 Volts 60 Cycles)	32-7381	4.00
	(115 Volts 25 Cycles)	32-7382	6.25
	(230 Volts 50 Cycles)	32-7418	....
(68)	Condenser (.09 Mfd.)	Part of (59)	....
(69)	Resistor (330,000 ohms) (Orange, Orange, Yellow)	33-1200	.20
(70)	Pilot Lamp	34-2064	.09
	Dial Scale	27-5098	.25
	Dial Hub and Set Screw	31-1550	.15
	Dial Front Spring	28-2837	.10
	Knob (Station Selector)	27-4206	.12
	Knob (Fine Tuning)	27-4207	.10
	Knob (Waveband)	27-4219	.10
	Knob (Tone, Volume)	27-4208	.10
	Tube Shield	28-2726	.10
	Tube Shield Base	28-2725	.03
	Tube Socket (4 Prong)	27-6034	.10
	Tube Socket (6 Prong)	27-6036	.11
	Tube Socket (7 Prong)	27-6037	.11
	Speaker Plug Socket	27-6033	.08
	Chassis Mtg. Screw	W-1495	1.50perC.
	Chassis Mtg. Washer (Rubber)	27-4198	.01
	Electric Cord and Plug	L-943-A	.60
	Bezel	28-2928	.35
	Bezel Glass	27-7887	.60
	Glowing Arrow Mask	27-5162	.20
	Glowing Arrow Screen	27-5161	.10
	Mask Arm	29-3274	.03
	Link	29-3285	.04
	Coupling	29-3586	.10

PRICES SUBJECT TO CHANGE WITHOUT NOTICE

©John F. Rider, Publisher

Intermediate Frequency: 460 K.C.

Power Consumption: 65 watts.

Tuning Drive: Two-speed gear drive, ball bearing. 50 to 1 ratio for slow-speed tuning.

Program Control: 3-position, with bass compensation effective in first position.

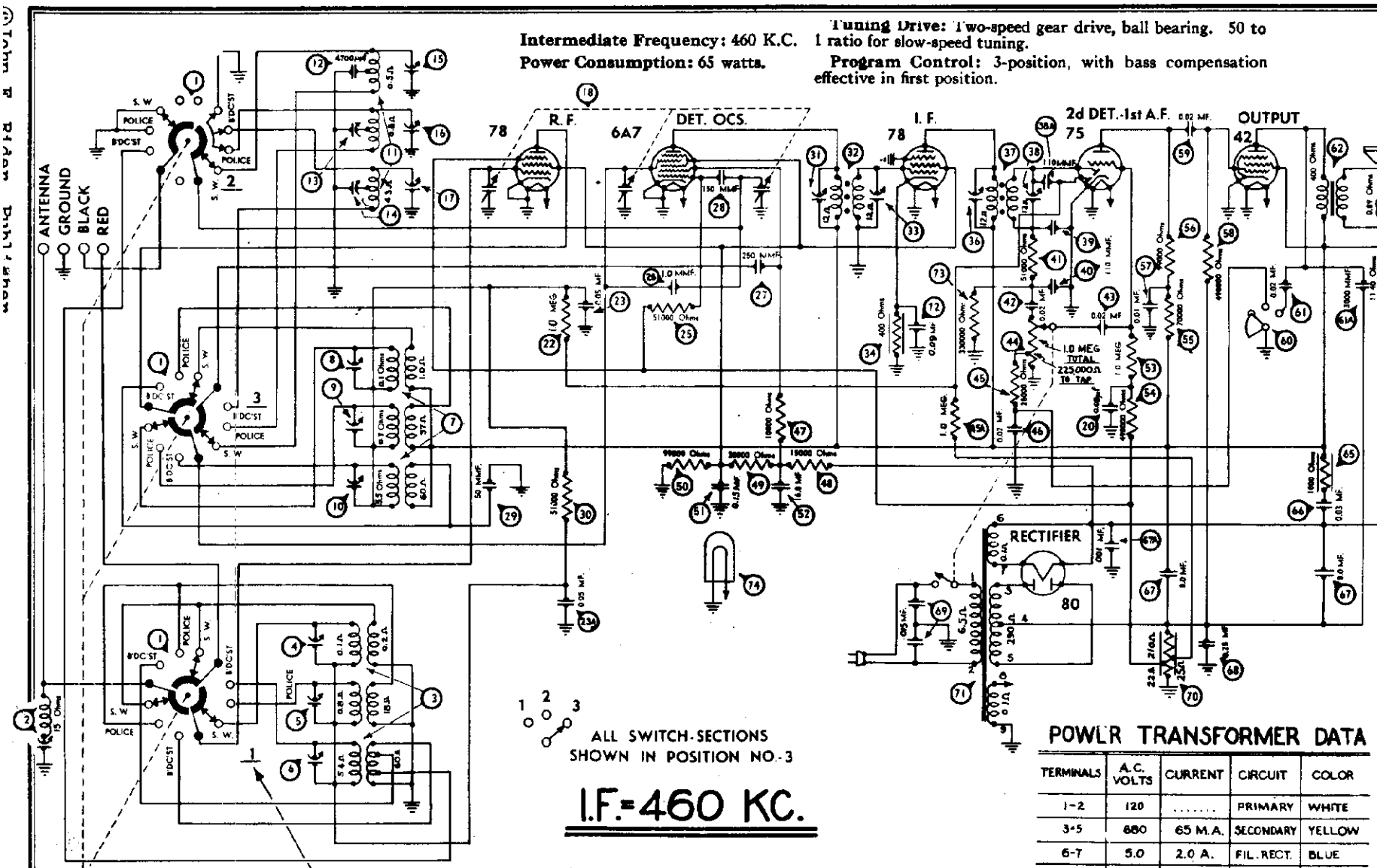

ALL SWITCH-SECTIONS SHOWN IN POSITION NO. 3

I.F.=460 KC.

Wave Bands: Three—(1) standard (with some Police); (2) Police, Aircraft and Amateur; (3) Short-wave.

Coverage of Each Band: Band 1, 540-1720 K.C.; Band 2, 1750 to 5800 K.C. (1.75-5.8 megacycles); Band 3, 5700-18000 K.C. (5.7 to 18.0 megacycles).

Fig. 3. Schematic Diagram of Model 625

POWER TRANSFORMER DATA

TERMINALS	A.C. VOLTS	CURRENT	CIRCUIT	COLOR
1-2	120	.....	PRIMARY	WHITE
3-5	660	65 M.A.	SECONDARY	YELLOW
6-7	5.0	2.0 A.	FIL. RECT.	BLUE
8-9	6.3	2.0 A.	FILAMENTS	BLACK
4	...	.....	CENTER TAP OF 3-5	YELLOW, GREEN TRACER

MODEL 625
Trimmers

PHILCO RADIO & TELEV. CORP.

Voltage
Alignment

Adjusting Compensating Condensers Model 625

The adjustment of the compensating condensers in Model 625 requires a signal generator covering the broadcast and police band, and also one capable of producing a signal at certain frequencies in the short wave band. Philco Model 088 All-wave signal generator is ideal for these requirements. Or you can use the Philco Model 024 or 048A instrument for the broadcast frequencies, and the Model 091 crystal controlled short wave signal generator for the "short-wave" frequencies. The location of all compensating condensers is shown in Fig. 2. An output meter is also needed, such as in Philco Model 025.

Adjustment of I. F.

1. Remove the antenna connection from the receiver, disconnect the grid clip from the first detector (type 6A7 tube), and connect the "ANT" output terminal of the broadcast signal generator to the grid cap of this tube; connect the "GND" terminal of the signal generator to the "GND" terminal of the receiver.

2. Connect the 0 to 80 volt range of the output meter in the Philco 048A or 025 unit to the plate and cathode of the output tube or to the two bottom prongs of the speaker plug.

3. Adjust the signal generator to a frequency of 460 K.C. Place the receiver in operation with the dial turned to the low frequency end of the standard broadcast band, wave band switch to extreme left (clockwise), and have the volume control adjusted near its maximum setting. Adjust the signal generator attenuator for approximately half-scale reading of the output meter.

4. The I.F. compensating condensers are located at the tops of the I.F. coil shields. The primary is adjusted by turning the screw in top and the secondary by the nut. Adjust condensers ㊱ and ㊲ (2d I.F. primary and secondary) for maximum reading in the output meter, and then condensers ㉞ and ㉝ (1st I.F. primary and secondary).

Adjustment of Wave-Trap

1. Connect the signal generator leads to the antenna and ground terminals of the receiver. Replace the grid clip on the 6A7 grid cap.

2. With the wave-band switch of the receiver still in the extreme left (standard band), (540-1720 K.C.), turn the station selector to 55.

3. With the signal generator in operation at 460 K.C., adjust the wave-trap ② condenser until a MINIMUM reading is obtained on the output meter. The Philco fibre wrench, part No. 3164, is used for this adjustment. The wave-trap compensator is reached from rear of chassis.

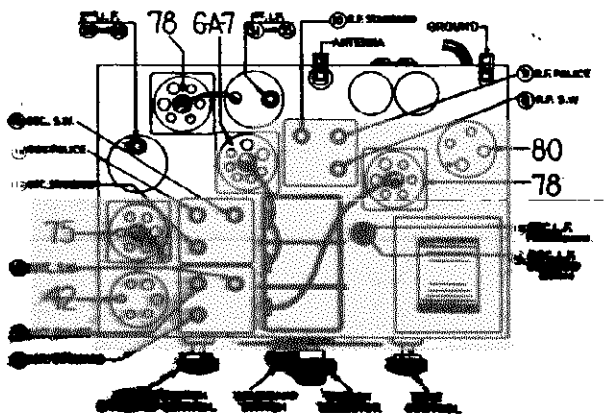

Fig. 2. Locations of Compensating Condensers

Adjustment of High and Low Frequency Compensators

1. With the wave-band switch still at Range No. 1 (broadcast band), set the dial at 1700 K.C. Set the signal generator at this frequency and adjust compensators ⑰, ⑥ and ⑩ for maximum output. These are the oscillator, antenna, and R.F. "standard" compensators respectively.

2. Tune the receiver and the signal generator to 600 K.C. and adjust compensator ⑭ (screw) for maximum output. This is the oscillator L.F. standard compensator.

3. Turn the wave-band switch to the second (middle) position. Set the dial at 3.6 M.C., at which point the fundamental of the 091 signal will be heard. If the Model 088 signal generator is being used, set it at 3.6 M.C. Adjust condensers ⑩, ⑨ and ⑨ in succession. These are the oscillator, antenna and R.F. police band adjustments.

4. Turn the tuning dial to 1.8 M.C., and set the signal generator (Model 024 or Model 088) at 1800 K.C. Adjust condenser ⑬ (Osc. L.F., police) (nut), to maximum signal.

5. Turn the wave-band switch to Band 3 (extreme right) and adjust the station selector to 18.0 megacycles. Set the signal generator at 18 M.C. By means of the Philco wrench, part No. 3164, adjust the oscillator S.W., antenna S.W. and R.F. S.W. compensators for maximum reading in the output meter. These are numbered ⑮, ④ and ⑧ respectively in figure No. 2.

Tube Socket Voltages
Measured to Ground

Tube	78 R.F.	6A7 Det. Osc.	78 I.F.	75 2d Det.	42 Output
Point P	258	258	258	153	243
SG	95	95	95	...	258
K	...	...	2.85	...	...
	6A7: G_3 & $_5$ = 173				

Above voltages were obtained by using a PHILCO type 025 Circuit Tester (or 048A All-purpose Tester), using test prods applied to underside of chassis. Volume control at maximum; dial at 55; waveband switch counter-clockwise (band 1). Use Fig. 1 for test points. Line voltage 115 volts.

Power Transformer Data

Terminals	A.C. Volts	Current	Circuit	Color
1–2	120	.....	Primary	White
3–5	680	65 M.A.	Secondary	Yellow
6–7	5.0	2.0 A.	Fil. Rect.	Blue
8–9	6.3	2.0 A.	Filaments	Black
4	...	.....	Center Tap of 3-5	Yellow, Green Tracer

MODEL 630, 630PF
2nd Type
Schematic

PHILCO RADIO & TELEV. CORP.

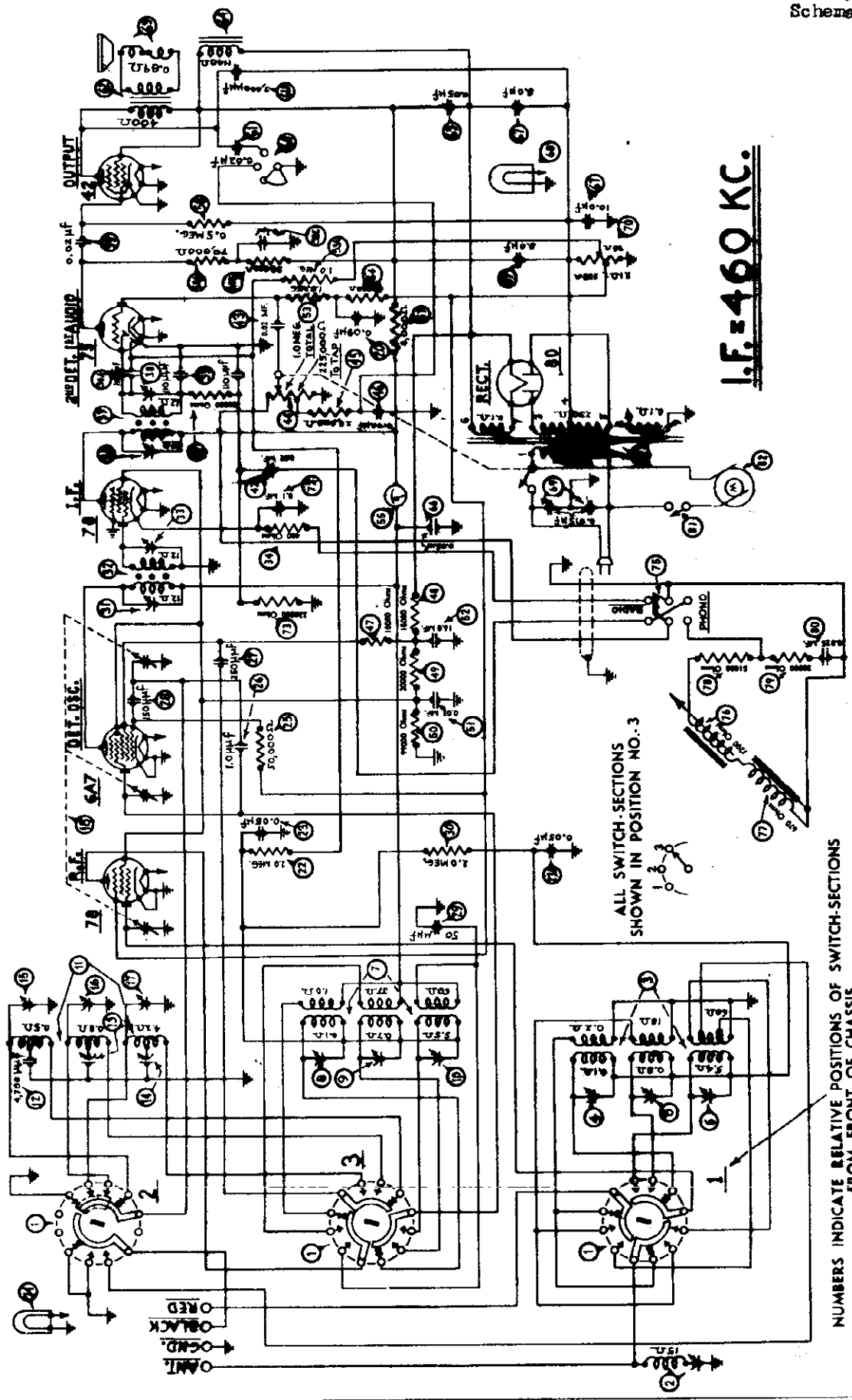

MODELS 630, 630PF
Changes, Parts

PHILCO RADIO & TELEV. CORP.

Later 1935 Production Runs

This sheet supplements the regular bulletin No. 219 on the Philco 630 and also covers the Philco Radio-Phonograph 630PF. All circuit and part number changes up to date have been included.

Beginning with run No. 5 the grid bias arrangement for the 78 R.F. and 6A7 1st detector was changed. A fixed bias from the B.C. resistor is fed through the AVC circuit to the grids of these tubes.

PARTS LIST

	Description	Part No.	List Price
①	Wave Band Switch	42-1152	$1.75
②	Wavetrap	38-6850	1.10
③	Antenna Transformer	32-1699	3.00
④	Compensating Condenser (Ant. S.W.)	Part of ③	....
⑤	Compensating Condenser (Ant. Police)	Part of ③	....
⑥	Compensating Condenser (Ant. Standard)	Part of ③	....
⑦	R. F. Transformer	32-1636	3.25
⑧	Compensating Condenser (R.F. Short-Wave)	Part of ⑦	....
⑨	Compensating Condenser (R.F. Police)	Part of ⑦	....
⑩	Compensating Condenser (R.F. Standard)	Part of ⑦	....
⑪	Oscillator Transformer	32-1637	2.50
⑫	Condenser (.0047 Mfd. Mica)	30-1052	.60
⑬	Compensating Condenser (Osc. Police)	Part of ⑪	....
⑭	Compensating Condenser (Osc. H.F. Standard)	Part of ⑪	....
⑮	Compensating Condenser (Osc. S.W.)	Part of ⑪	....
⑯	Compensating Condenser (Osc. L.F. Police)	Part of 31-6027	.70
⑰	Compensating Condenser (Osc. L.F. Standard)	Part of 31-6027	
⑱	Tuning Condenser Assembly	31-1741	....
⑲	Condenser (.09 Mfd. Twin Bakelite Block)	4989-DG	.40
⑳	Resistor (1 Meg.) (Brown, Black, Green)	33-1096	.20
㉑	Condenser (.05 Mfd. Tubular)	30-4020	.35
㉑a	Condenser (.05 Mfd. Tubular)	30-4020	.35
㉒	Resistor (50000 ohms) (Green, Brown, Orange)	6098	.20
㉓	Condenser (1 Mmfd.)	Part of ⑱	....
㉔	Condenser (.00025 Mfd. Mica)	30-1032	.35
㉕	Condenser (.00015 Mfd. Mica)	30-1033	.35
㉖	Condenser (.00005 Mfd. Mica)	30-1029	.35
㉗	Resistor (51000 ohms) (Green, Brown, Orange)	6098	.20
㉘	Compensating Condenser (1st I.F. Primary)	Part of ㉙	....
㉙	1st I.F. Transformer	32-1646	2.25
㉚	Compensating Condenser (1st I.F. Secondary)	Part of ㉙	....
㉛	Resistor (400 ohms Flexible) (Yellow, Black, Brown)	33-3016	.20
㉜	Compensating Condenser (2nd I.F. Pri.)	Part of ㉝	....
㉝	2nd I.F. Transformer	32-1647	2.25
㉞	Compensating Condenser (2nd I.F. Sec.)	Part of ㉝	....
㉟	Condenser (.00011 Mfd.) (Twin Bakelite)	8035-DG	.35
㉟a	Condenser (.00011 Mfd. Mica)	30-1031	.35
㊱	Condenser (.00011)	Part of ㊲	....
㊲	Resistor (50000 ohms) (Green, Brown, Orange)	6098	.20
㊳	Condenser (.02 Mfd. Tubular)	30-4215	.30
㊴	Condenser (.02 Mfd. Tubular)	30-4215	.30
㊵	Volume Control and On-Off Switch	33-5105	1.45
㊶	Resistor (20000 ohms) (Red, Black, Orange)	33-1178	.20
㊷	Condenser (.02 Mfd. Tubular)	30-4215	.30
㊸	Resistor (10000 ohms) (Brown, Black, Orange)	4412	.20
㊹	Resistor (15000 ohms) (Brown, Black, Orange)	5718	.35
㊺	Resistor (20000 ohms) (Red, Black, Orange)	3524	.20
㊻	Resistor (20000 ohms) (Red, Black, Orange)	6649	.20
㊼	Condenser (.15 Mfd. Tubular)	30-4191	.40
㊽	Condenser (16 Mfd. Electrolytic)	30-2118	1.65

	Description	Part No.	List Price
㊾	Resistor (1 Meg.) (Brown, Black, Green)	33-1096	$0.20
㊾a	Resistor (1. Meg.) (Brown, Black, Green)	33-1096	.20
㊿	Resistor (99000 ohms) (White, White, Orange)	6099	.20
(51)	Shadow Tuning Meter	45-2086	2.00
(52)	Condenser (.05 Mf. Twin Bakelite)	3615-DG	.40
(53)	Resistor (4000 ohms) (Yellow, Black, Red)	33-1031	.20
(54)	Resistor (490,000 ohms) (Yellow, White, Yellow)	33-1097	.20
(55)	Condenser (.02 Mfd. Bakelite)	8318-SU	.30
(55)a	Resistor (70000 ohms) (Violet, Black, Orange)	5385	.20
(55)b	Resistor (99000 ohms) (White, White, Orange)	6099	.20
(55)c	Condenser (.09 Mf. Bakelite)	4989-SG	.35
(56)	Tone Control (3 position)	30-4332	.75
(57)	Condenser in Tone Control	Part of (56)	....
(57)a	Condenser (.003 Mfd. Tubular)	30-4042	.25
(58)	Output Transformer	32-7178	1.60
(59)	Voice Coil & Cone Assembly (K-32)	36-3159	.80
(60)	Field Coil & Pot Assembly (K-32)	36-3498	3.25
(61)	Condenser (.05 Mfd. Tubular)	30-4020	.35
(62)	Condenser (.05 Mfd.)	Part of (61)	....
(63)	Condenser (8 Mfd., 8 Mfd., 10 Mfd. Electrolytic)	30-2073	2.15
(64)	Pilot Lamp (Shadow Tuning Meter)	Part of (51)	....
(65)	Condenser (.015 Mfd. Twin Bakelite Block)	3793-DG	.40
(66)	Resistor (BC Wirewound—22 ohms, 25 ohms, 210 ohms)	33-3222	.20
(67)	Power Transformer (115 Volts 60 Cycles)	32-7384	5.50
	(115 Volts 25 Cycles)	32-7385	7.75
	(230 Volts 50 Cycles)	33-7386	5.75
(68)	Condenser (.05 Mf.)	Part of (51)	....
(69)	Resistor (350,000 ohms) (Orange, Orange, Yellow)	33-1280	.20
(70)	Pilot Lamp	34-2039	.09
(71)	Phono Switch Cable Assy.	35-3014	1.30
(72)	Pickup Head Assy.	35-2014	7.25
(73)	Hum Bucking Coil Assy.	32-1940	1.10
(74)	Resistor (51,000 ohms)	6098	.20
(75)	Resistor (20,000 ohms)	33-1178	.20
(76)	Condenser (.025 Mf.)	7653-SU	.35
(77)	Automatic Stop	6345	3.15
(78)	Phono. Motor (115 V. 60 Cycle)	35-1112	20.00
	Dial Scale	27-5098	.25
	Dial Hub & Set Screw	31-1550	.15
	Dial Front Spring	28-2837	.10
	Knob (Station Selector)	27-4206	.12
	Knob (Fine Tuning)	27-4207	.10
	Knob (Waveband)	27-4219	.10
	Knob (Volume Control, Tone Control)	27-4208	.10
	Tube Shield	28-2726	.10
	Tube Shield Base	28-2725	.03
	Tube Socket (4-Prong)	27-6034	.10
	Tube Socket (6-Prong)	27-6036	.11
	Tube Socket (7-Prong)	27-6037	.11
	Speaker Plug Socket	27-6033	.08
	Chassis Mfg. Screw	W-1495	1.50perC.
	Chassis Mtg. Washer (Rubber)	27-4198	.01
	Electric Cord & Plug	L-943-A	.60

PRICES SUBJECT TO CHANGE WITHOUT NOTICE

©John F. Rider, Publisher

©John F. Rider. Publisher

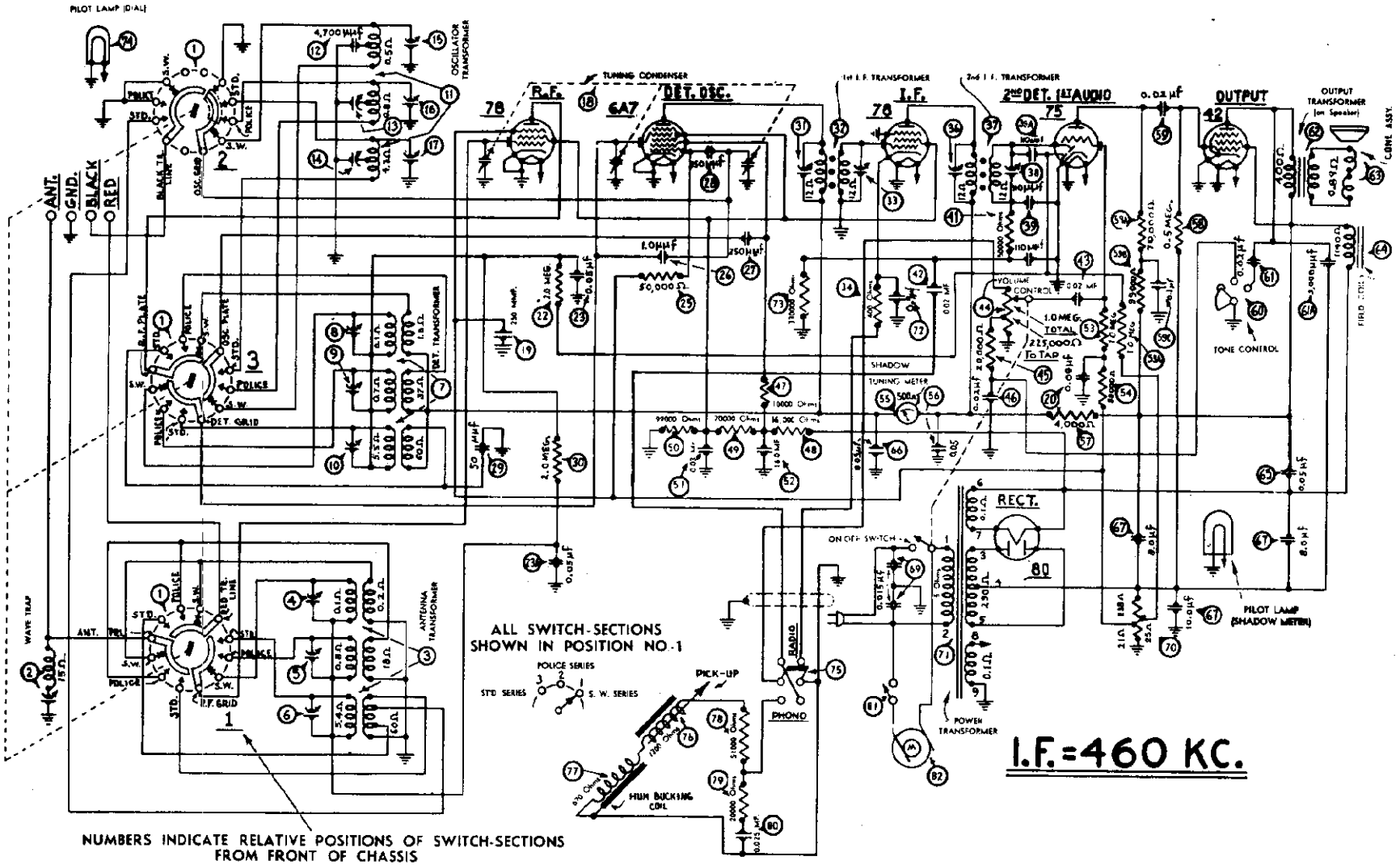

Type Circuit: Superheterodyne, with preselector R.F. amplifier, and pentode output (5 watts); built in connections for Philco All-wave aerial; aerial selector built into and operated by wave-band switch.

Power Supply: Alternating Current. Voltage and frequency as specified on chassis nameplate.

Tubes Used: 1 type 78, R.F.; 1 type 6A7, Detector-Oscillator; 1 type 78, I.F.; 1 type 75, 2d Detector and 1st A.F.; 1 type 42 Output; 1 type 80 Rectifier.

Wave Bands: Three—(1) Short Wave (with some Police); (2) Police, Aircraft and Amateur; (3) Standard.

Coverage of Each Band: Band 1, 540-1720 K.C.; Band 2, 1750 to 5800 K.C. (1.75-5.8 megacycles); Band 3, 5700-18000 K.C. (5.7 to 18.0 megacycles).

Tuning Drive: Two-speed gear drive, ball bearing. 50 to 1 ratio for slow-speed tuning.

Tone Control: 3-position, with bass compensation effective in first position.

Intermediate Frequency: 460 K.C.

Power Consumption: 70 watts.

MODEL 635
Socket, Trimmers

PHILCO RADIO & TELEV. CORP.

Voltage, Alignment
Transformer Data

Adjusting Compensating Condensers

The adjustment of the compensating condensers in Model 635 requires a signal generator covering the broadcast and police band, and also one capable of producing a signal at certain frequencies in the short wave band. Philco Model 088 All-wave signal generator is ideal for these requirements. Or you can use the Philco Model 024 or 048A instrument for the broadcast frequencies, and the Model 091 crystal controlled short wave signal generator for the "short wave" frequencies. The location of all compensating condensers is shown in Fig. 2. An output meter is also needed, such as in Philco Model 025

Adjustment of I. F.

1. Remove the antenna connection from the receiver, disconnect the grid clip from the first detector (type 6A7 tube), and connect the "ANT" output terminal of the broadcast signal generator to the grid cap of this tube; connect the "GND" terminal of the signal generator to the "GND" terminal of the receiver.

2. Connect the 0 to 30 volt range of the output meter in the Philco 048A or 025 unit to the plate and cathode of the output tube or to the two bottom prongs of the speaker plug.

3. Adjust the signal generator to a frequency of 460 K.C. Place the receiver in operation with the dial turned to the low frequency end of the standard broadcast band, wave band switch to extreme left (clockwise), and have the volume control adjusted near its maximum setting. Adjust the signal generator attenuator for approximately half-scale reading of the output meter.

4. The I.F. compensating condensers are located at the tops of the I.F. coil shields. The primary is adjusted by turning the screw in top and the secondary by the nut. Adjust condensers ㉜ and ㉝ (2d I.F. primary and secondary) for maximum reading in the output meter, and then condensers ㉛ and ㉞ (1st I.F. primary and secondary).

Adjustment of Wave-Trap

1. Connect the signal generator leads to the antenna and ground terminals of the receiver. Replace the grid clip on the 6A7 grid cap.

2. With the wave-band switch of the receiver still in the extreme left (standard band), (540-1720 K.C.), turn the station selector to 55.

3. With the signal generator in operation at 460 K.C., adjust the wave-trap ③ condenser until a MINIMUM reading is obtained on the output meter. The Philco fibre wrench, part No. 3164, is used for this adjustment. The wave-trap compensator is reached from rear of chassis.

Adjustment of High and Low Frequency Compensators

1. With the wave-band switch still at Range No. 3 (broadcast band), set the dial at 1700 K.C. Set the signal generator at this frequency and adjust compensators ⑰, ⑥ and ⑩ for maximum output. These are the oscillator, antenna, and R.F. "standard" compensators respectively.

2. Tune the receiver and the signal generator to 600 K.C. and adjust compensator ⑭ (screw) for maximum output. This is the oscillator L.F. standard compensator.

3. Turn the wave-band switch to the second (middle) position. Set the dial at 3.6 M.C. at which point the fundamental of the 091 signal will be heard. If the Model 088 Signal Generator is being used, set it at 3.6 M.C. Adjust condensers ⑯, ⑤ and ⑨ in succession. These are the oscillator, antenna and R.F. police band adjustments.

4. Turn the tuning dial to 1.8 M.C., and set the signal generator (Model 026 or Model 088) at 1800 K.C. Adjust condenser ⑬ (Osc. L.F., police) (nut), to maximum signal.

5. Turn the wave-band switch to Band 1 (extreme right) and adjust the station selector to 18.0 megacycles. Set the signal generator at 18 M.C. By means of the Philco wrench, part No. 3164, adjust the oscillator S.W., antenna S.W. and R.F. S.W. compensators for maximum reading in the output meter. These are numbered ⑫, ④ and ⑧ respectively in figure No. 2.

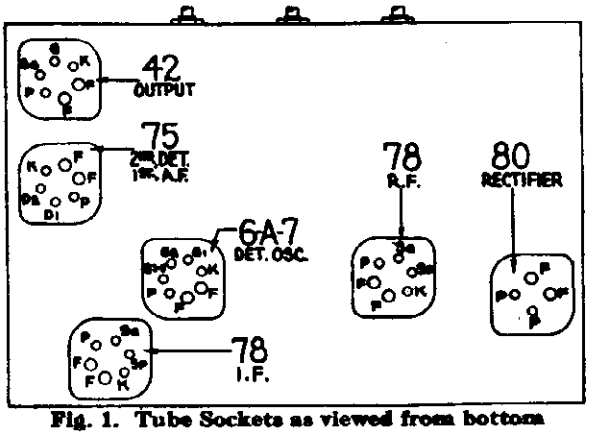

Fig. 1. Tube Sockets as viewed from bottom

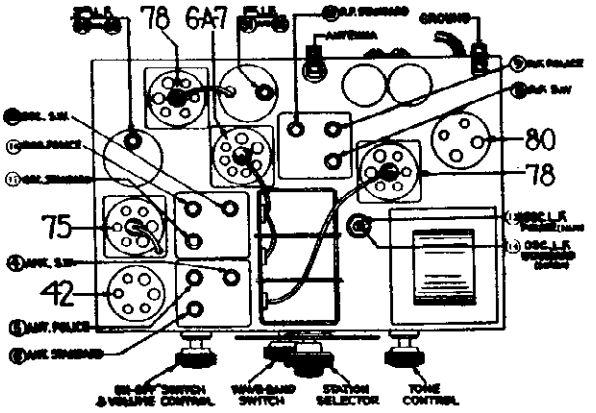

Fig. 2. Location of Compensating Condensers

Tube Socket Voltages
Measured to Ground

Tube	78 R.F.	6A7 Det. Osc.	78 I.F.	75 2d Det.	42 Output
Point P	245	245	245	188	298
SG	102	102	102	...	311
K	...	...	2.6	...	...
	6A7: $G_{3\&1}$ = 175				

Above voltages were obtained by using a PHILCO type 025 Circuit Tester (or 048A All-purpose Tester), using test prods applied to underside of chassis. Volume control at maximum; dial at 55; waveband switch counter-clockwise (band 1). Use Fig. 1 for test points. Line voltage 115 volts.

Power Transformer Data

Terminals	A.C. Volts	Current	Circuit	Color
1–2	120	.....	Primary	White
3–5	746	78 M.A.	Secondary	Yellow
6–7	5.0	2.0 A.	Fil. Rect.	Blue
8–9	6.3	2.25 A.	Filaments	Black
4	...	.....	Center Tap of 3-5	Yellow, Green Tracer

©John F. Rider, Publisher

PHILCO RADIO & TELEV. CORP.

MODEL 635
Chassis
Parts List

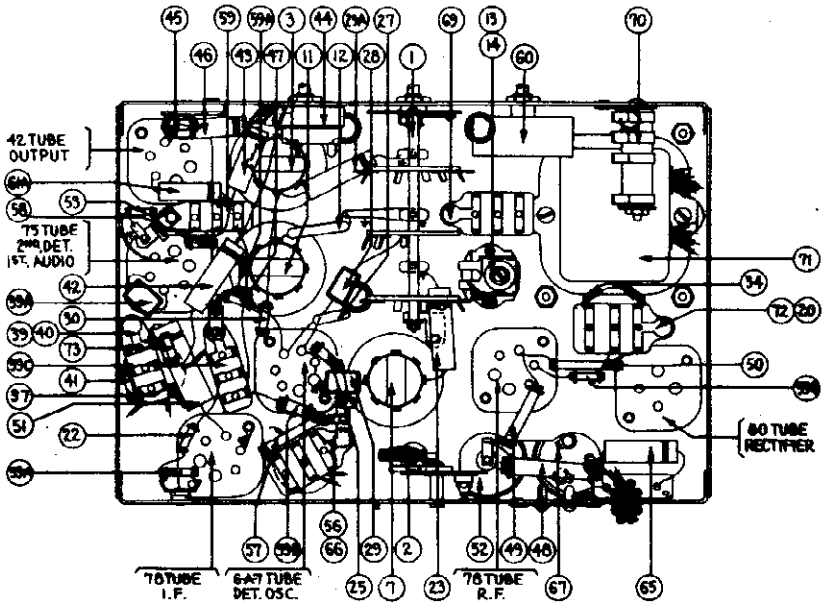

Fig. 4. Bottom View of Chassis

Replacement Parts—Model 635

	Description	Part No.	List Price
①	Wave Band Switch	42-1152	$1.75
②	Wavetrap	38-6850	1.10
③	Antenna Transformer	32-1867	3.00
④	Compensater (Ant. S.W.)	Part of ③	....
⑤	Compensater (Ant. Police)	Part of ③	....
⑥	Compensater (Ant. Standard)	Part of ③	....
⑦	R. F. Transformer	32-1868	3.00
⑧	Compensater (R.F. Short-Wave)	Part of ⑦	....
⑨	Compensater (R.F. Police)	Part of ⑦	....
⑩	Compensater (R.F. Standard)	Part of ⑦	....
⑪	Oscillator Transformer	32-1869	2.50
⑫	Condenser (.0047 Mfd. Mica)	30-1052	.60
⑬	Compensater (Osc. L.F. Police)	31-6027	.70
⑭	Compensater (Osc. L.F. Standard)	Part of ⑬	....
⑮	Compensater (Osc. S.W.)	Part of ⑬	....
⑯	Compensater (Osc. Police)	Part of ⑪	....
⑰	Compensater (Osc. Standard)	Part of ⑬	....
⑱	Tuning Condenser Assembly	31-1741	....
⑲	Condenser (.00025 Mica)	5858	.25
⑳	Condenser (.09 Mfd. Twin Bakelite Block)	4989-DG‡	.40
㉑	Resistor (1 Meg.) (Brown, Black, Green)	33-1096	.20
㉒	Condenser (.05 Mfd. Tubular)	30-4020	.35
㉒a	Condenser (.05 Mfd. Tubular)	30-4020	.35
㉓	Resistor (50000 ohms) (Green, Brown, Orange)	6098	.20
㉔	Condenser (1 Mmfd.)	Part of ⑬	....
㉕	Condenser (.00025 Mfd. Mica)	30-1032	.35
㉖	Condenser (.00015 Mfd. Mica)	30-1033	.35
㉗	Condenser (.00005 Mfd. Mica)	30-1029	.35
㉘	Resistor (51000 ohms) (Green, Brown, Orange)	6098	.20
㉙	Compensater (1st I.F. Primary)	Part of ㉚	....
㉚	1st I.F. Transformer	32-1646	2.25
㉛	Compensater (1st I.F. Secondary)	Part of ㉚	....
㉜	Resistor (400 ohms Flexible) (Yellow, Black, Brown)	33-3016	.20
㉝	Compensater (2nd I.F. Pri.)	Part of ㉞	....
㉞	2nd I.F. Transformer	32-1647	2.25
㉟	Compensater (2nd I.F. Sec.)	Part of ㉞	....
㊱	Condenser (.00011 Mfd.) (Twin Bakelite)	8035-DG‡	.35
㊱a	Condenser (.00011 Mfd. Mica)	30-1031	.35
㊲	Condenser (.00011)	Part of ㊱	....
㊳	Resistor (50000 ohms) (Green, Brown, Orange)	6098	.20
㊴	Condenser (.02 Mfd. Tubular)	30-4215	.30
㊵	Condenser (.02 Mfd. Tubular)	30-4215	.30
㊶	Volume Control and On-Off Switch	33-5105	1.45
㊷	Resistor (20000 ohms) (Red, Black, Orange)	33-1178	.20
㊸	Condenser (.02 Mfd. Tubular)	30-4215	.30
㊹	Resistor (10000 ohms) (Brown, Black, Orange)	6432	.20
㊺	Resistor (14000 ohms) (Brown, Black, Orange)	33-3166-33	.30
㊻	Resistor (20000 ohms) (Red, Black, Orange)	3529	.20
㊼	Resistor (20000 ohms) (Red, Black, Orange)	6099	.20
㊽	Condenser (.15 Mfd. Tubular)	30-4191	.40
㊾	Condenser (16 Mfd. Electrolytic)	30-2178*	1.65
㊿	Resistor (1 Meg.) (Brown, Black, Green)	33-1096	.20
㊿a	Resistor (1 Meg.) (Brown, Black, Green)	33-1096	.20
(51)	Resistor (99000 ohms) (White, White, Orange)	6099	.20
(52)	Shadow Tuning Meter	45-2083	2.50
(53)	Condenser (.05 Mf. Twin Bakelite)	3615-DG‡	.40
(54)	Resistor (4000 ohms) (Yellow, Black, Red)	33-1031	.20

	Description	Part No.	List Price
(55)	Resistor (490,000 ohms) (Yellow, White, Yellow)	33-1097	$0.20
(56)	Condenser (.02 Mfd. Bakelite)	8318-SU‡	.30
(56a)	Resistor (70000 ohms) (Violet, Black, Orange)	5385	.20
(56b)	Resistor (99000 ohms) (White, White, Orange)	6099	.20
(56c)	Condenser (.09 Mf. Bakelite)	4989-SG‡	.35
(57)	Tone Control (3 position)	30-4332†	.75
(58)	Condenser in Tone Control	Part of (57)	....
(58a)	Condenser (.003 Mfd. Tubular)	30-4042	.25
(59)	Output Transformer	32-7178	1.60
(60)	Voice Coil & Cone Assembly (K-32)	36-3159	.80
(61)	Field Coil & Pot Assembly (K-32)	36-3498	3.25
(62)	Condenser (.05 Mfd. Tubular)	30-4020	.35
(63)	Condenser (.05 Mfd.)	Part of (62)	....
(64)	Condenser (8 Mfd., 8 Mfd., 10 Mfd. Electrolytic)	30-2073	2.15
(65)	Pilot Lamp (Shadow Tuning Meter)	Part of (62)	....
(66)	Condenser (.015 Mfd. Twin Bakelite Block)	3793-DG‡	.40
(67)	Resistor (BC Wirewound—22 ohms, 25 ohms, 210 ohms)	33-3222	.20
(68)	Power Transformer (115 Volts 60 Cycles)	32-7384	5.50
	(115 Volts 25 Cycles)	32-7385	7.75
	(230 Volts 50 Cycles)	32-7420	....
(69)	Condenser (.09 Mf.)	Part of (62)	....
(70)	Resistor (330,000 ohms) (Orange, Orange, Yellow)	33-1200	.20
(71)	Pilot Lamp	34-2039	.09
(72)	Phono Switch Cable Assy.	35-3014	1.30
(73)	Pickup Head Assy.	35-2014	7.25
(74)	Hum Bucking Coil Assy.	32-1940	1.10
(75)	Resistor (51,000 ohms)	6098	.20
(76)	Resistor (20,000 ohms)	33-1178	.20
(77)	Condenser (.025 Mf.)	7653-SU‡	.35
(78)	Automatic Stop	6345	3.15
(79)	Phono. Motor (115 V. 60 Cycle)	35-1112	20.00
	Dial Scale	27-5098	.25
	Dial Hub & Set Screw	31-1550	.15
	Dial Front Spring	28-2837	.10
	Knob (Station Selector)	27-4206	.12
	Knob (Fine Tuning)	27-4207	.10
	Knob (Waveband)	27-4219	.10
	Knob (Volume Control, Tone Control)	27-4208	.10
	Tube Shield	28-2726	.10
	Tube Shield Base	28-2725	.03
	Tube Socket (4-Prong)	27-6034	.10
	Tube Socket (6-Prong)	27-6036	.11
	Tube Socket (7-Prong)	27-6037	.11
	Speaker Plug Socket	27-6033	.08
	Chassis Mtg. Screw	W-1095	1.50per C.
	Chassis Mtg. Washer (Rubber)	27-4198	.01
	Electric Cord & Plug	1-913-A	.80
	Glowing Arrow Mask	27-5162	.20
	Glowing Arrow Screen	27-5161	.10
	Mask Arm	29-3274	.03
	Link	29-3385	.04
	Coupling	29-3586	.10
	Shadow Season	27-5120	1.50C
	Inverted Dial Scale	27-5121	....

*CODE 124:— 30-2126 † 30-4530 ‡ Use "O" (GBG, etc.) Type Condensers

PRICES SUBJECT TO CHANGE WITHOUT NOTICE

©John F. Rider, Publisher

MODEL 641
Chassis
Parts List

PHILCO RADIO & TELEV. CORP.

PRICES ARE SUBJECT TO CHANGE WITHOUT NOTICE

Replacement Parts for Model 641

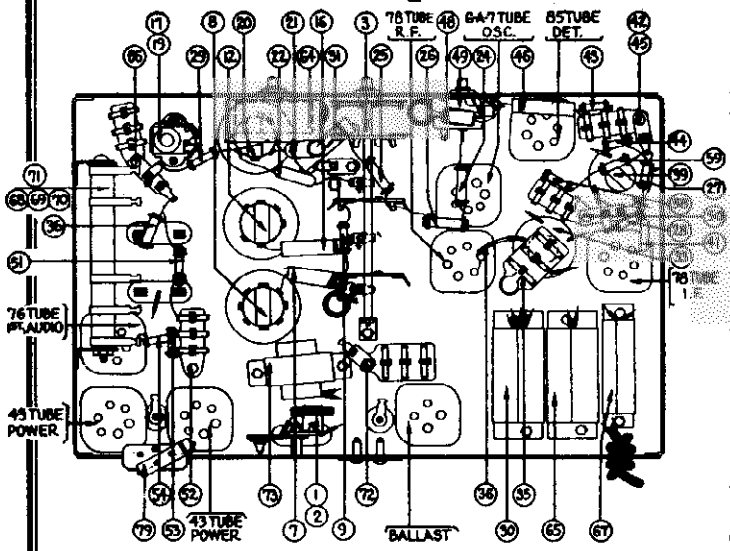

Fig. 4. Bottom View of Chassis

	Description	Part No.	List Price
①	Coil—Wavetrap	38-6972	$0.75
②	Condenser—Wavetrap		
③	Waveband Switch	42-1130	....
④	Padder	Part of ⑧	....
⑤	Padder	Part of ⑨	....
⑥	Padder	Part of ⑨	....
⑦	Condenser (0.05 mfd.)	30-4020	.20
⑧	Antenna Transformer	32-1827	2.40
⑨	Resistor (160,000 ohms)	33-1191	.20
⑩	Condenser (2.0 mfd.)	30-4355	2.25
⑪	Tuning Condenser Gang	31-1645	....
⑫	R. F. Transformer	32-1828	2.00
⑬	Padder	Part of ⑫	....
⑭	Padder	Part of ⑫	....
⑮	Padder	Part of ⑫S.W	....
⑯	Condenser (0.05 mfd.)	30-4020	.20
⑰	Padder (Nut S.W.)	31-6027	.70
⑰A	Condenser (1.2 mmf.)	.....	....
⑱	Padder	Part of ⑳	..
⑲	Padder (Screw, Broadcast)	Part of ⑫	....
⑳	Oscillator Transformer	32-1829	1.25
㉑	Condenser (0.01 mfd.)	30-4169	.20
㉒	Condenser (2200 mmf.)	30-1057	.40
㉓	Padder (S.W.)	Part of ㉒	....
㉔	Resistor (51,000 ohms)	6098	.20
㉕	Resistor (5000 ohms)	5310	.20
㉖	Resistor (10,000 ohms)	4412	.20
㉗	Resistor (1.0 meg.)	33-1096	.20
㉘	Resistor (1.0 meg.)	33-1096	.20
㉙	Resistor (13,000 ohms)	8267	.20
㉚	Condenser (0.05 mfd.)	Part of ㉖	....
㉛	Condenser (0.3 mfd.)	30-4020	.20
㉜	Padder	Part of ㉝	....
㉝	1st I. F. Transformer	32-1711	2.00
㉞	Padder	Part of ㉝	....
㉟	Condenser (0.05 mfd.)	3615-DU	.40
㊱	Resistor (10 ohms)	33-3041	.25
㊲	Shadow Meter	45-2083	2.00
㊳	Padder	Part of ㊴	....
㊴	2nd I. F. Transformer	32-1830	2.00
㊵	Padder	Part of ㊴	....
㊶	Condenser (110 mmf.)	30-1031	.20
㊷	Condenser (110 mmf.)	8035-DU	.25
㊸	Resistor (51,000 ohms)	6098	.20
㊹	Resistor (330,000 ohms)	33-1200	.20
㊺	Condenser (110 mmf.)	Part of ㊷	....
㊻	Condenser (0.01 mfd.)	30-4169S	.20
㊼	Condenser (0.05 mfd.)	Part of ㊳	....
㊽	Condenser (110 mmf.)	30-1031	.20
㊾	Volume Control (1. meg.)	33-5116	1.45
㊿	Condenser (0.01 mfd.)	3903-SU	.25
(51)	Resistor (99,000 ohms)	6099	.20
(52)	Condenser (0.05 mfd.)	3615-SU	.35
(53)	Resistor (490,000 ohms)	6097	.20
(54)	Resistor (99,000 ohms)	6099	.20
(55)	Condenser (0.2 mfd.)	Part of (64)	....
(56)	Resistor (25,000 ohms)	4516	.20
(57)	Condenser (0.75 mfd.)	Part of (64)	....
(58)	Resistor (1. meg.)	33-1096	.20
(59)	Resistor (490,000 ohms)	6097	.20
(60)	Condenser (0.09 mfd.)	Part of (62)	....
(61)	Resistor (20,000 ohms)	33-1178	.20
(62)	Condenser (0.015 mfd.)	8318-SU	.35
(63)	Condenser (2000 mmf.)	Part of (64)A	....
(64)	Condenser (800 mmf.)		
(64)A	Tone Control	30-4333	.75
(65)	Condenser (0.25 mfd.)	30-4356	1.20
(66)	Condenser (0.03 mfd.)	8318-SU	.35
(67)	Condenser (1.0 mfd.)	30-4357	1.30
(68)	Resistor (7 ohms)	B.C. 38-6970	....
(69)	Resistor (8.3 ohms)		
(70)	Resistor (30 ohms)		
(71)	Resistor (7.8 ohms)		
(72)	Condenser (0.015 mfd.) Double	3793-DU	.40
(73)	Choke	32-7476	1.25
(74)	Choke	32-7213	1.60
(75)	Input Transformer	32-7211	2.25
(76)	Output Transformer (on speaker)	2550	1.75
(77)	Speaker Model K-13 (641-B)	.....	....
(78)	Speaker Model H-10 (641-X)	.....	....
(79)	Condenser (.006 mfd.)	30-4125	.20
	Tube Shield Base	28-2725	.03
	Tube Shield Body	28-2726	.10
	R. F. Shield	38-6938	.85
	I. F. Shield	38-6808	.25
	4-prong Socket	27-6042	.10
	5-prong Socket	27-6035	.11
	6-prong Socket	27-6036	.11
	7-prong Socket	27-6037	.11
	Speaker Socket	27-6043	.08
	Bezel	28-3164	.50
	Bezel Gasket	27-8036	....
	Bezel Glass	27-8008	.55
	Bezel Frame Gasket	27-7972	....
	Dial	27-5125	....
	Hub and Set Screw Assembly	31-1550	.15
	Spring Clamp	28-2837	.10
	Pilot Lamp	34-2068	.16
	Knob (Station Selector)	27-4206	.12
	Knob (Fine Tuning)	27-4207	.10
	Knob (Volume Control, Tone Control)	27-4208	.10
	Knob (Waveband Switch)	27-4225	....

©John F. Rider, Publisher

MODEL 641
Schematic

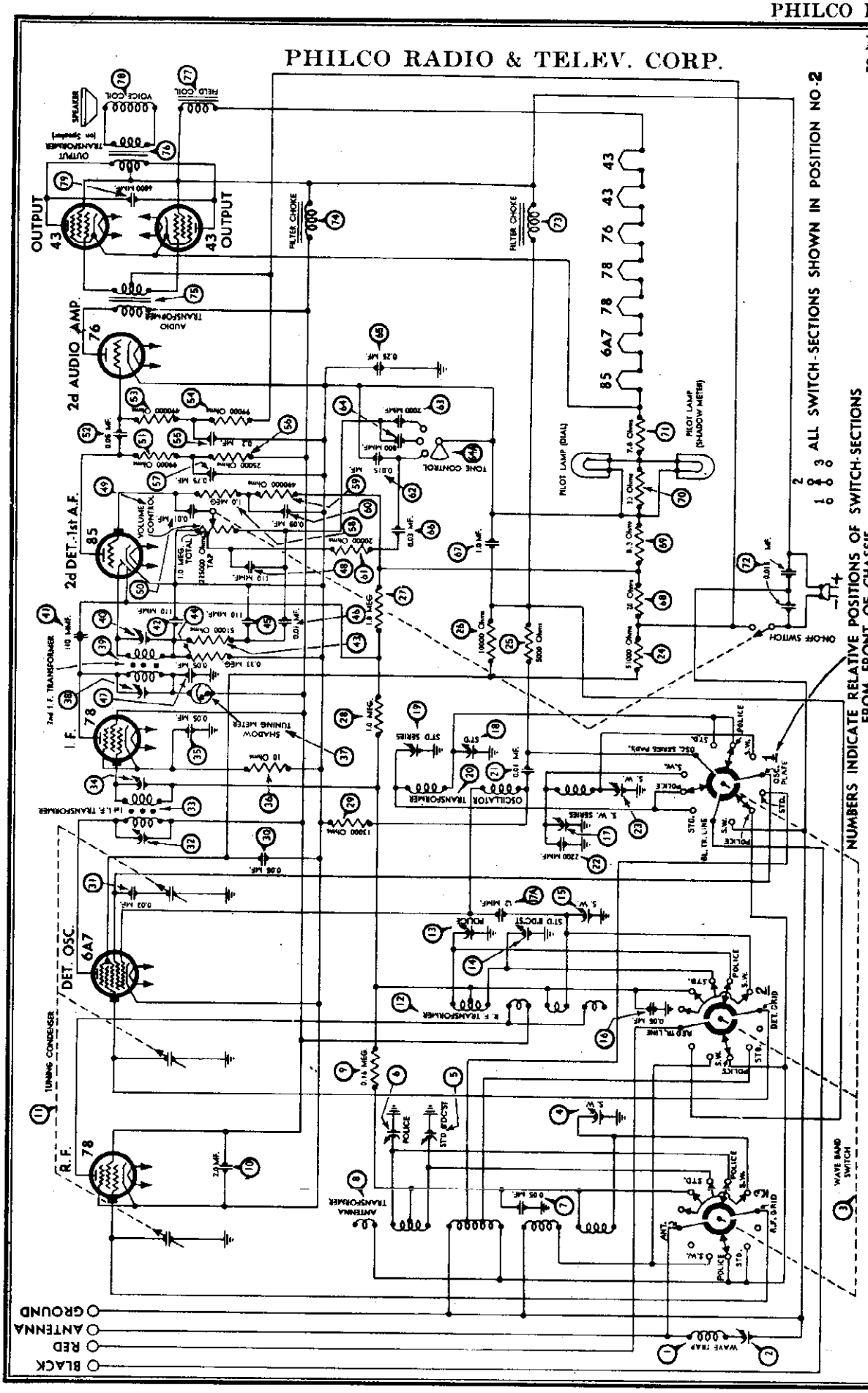

INTERMEDIATE FREQUENCY: 460 Kilocycles.

POWER SUPPLY: 115 volts D. C. use type 4 ballast tube for 230 volt operation.

WAVE BANDS: Three: (1) Standard (broadcast); (2) Police; (3) Shortwave.

Fig. 3. Schematic Diagram of Model 641

©John F. Rider, Publisher

MODEL 641 | PHILCO RADIO & TELEV. CORP. | Trimmers, Notes
Socket, Voltage | | Alignment

Adjusting Compensating Condensers

Adjustment of compensating condensers in Model 641 requires an accurate signal generator covering standard wave police, and shortwave frequencies. The **PHILCO Model 088 All-Wave Signal Generator,** having a continuous range of from 100 to 20000 K. C., is ideal for this purpose.

An output meter is also needed. **PHILCO Model 025 Circuit Tester** includes a high grade output meter.

Philco No. 3164 Fibre Wrench and **No. 27-7059 Fibre-Handled Screwdriver** complete the equipment needed for making these adjustments. The locations of the various compensating condensers are shown in Fig. 2. Connect the output meter to the plate contacts of the 43 output tubes (using the adapters provided with the "025") and set it at the 0-30 volt range.

I.F.—Connect the antenna lead from the No. 088 Signal Generator to the grid cap of the 78 I.F. amplifier (having removed the grid clip from the tube), and the ground lead to the ground post on the chassis. Set the Signal Generator No. 088 at 460 K. C., volume control of set full on, tone control counter-clockwise, wave band switch in No. 1 position, and condenser gang all the way in. Adjust the signal generator attenuator for approximately ¼ scale reading on the output meter, now adjust condensers ㉘ and ㉚ for maximum reading of the output meter. Remove the signal generator antenna lead from the grid cap (replacing grid clip) and connect to the 6A7 grid cap. Repeat procedure, this time tuning condensers ㉒ and ㉔ for maximum output reading. Care should be taken to keep the signal input from the signal generator low at all times to insure proper peaking of the transformers.

WAVE TRAP—Connect the Signal Generator antenna and ground-leads to the antenna and ground posts of the set. Replace the grid clip on the 6A7 tube cap. With the signal generator operating at 460 K. C. and the set controls adjusted as for I.F. adjustments, adjust wavetrap ① until a minimum reading is obtained in the output meter.

SHORT WAVE—Turn wave band switch to extreme right (position 3) and set dial at 18.0 meg. Set Signal Generator at 18.0 meg. connect a shunt condenser across the oscillator section of the gang and tune the shunt for maximum output. Adjust condensers ④ and ⑱ for maximum output. Remove shunt condenser and adjust condenser ⑳ for correct calibration. Turn dial of set and signal generator to 6.0 meg. and adjust condenser ⑰ for maximum output. Repad condenser ⑳ on 18.0 meg.

STANDARD—Turn wave switch to Standard (position 1) and set dial at 1400 K. C. Set signal generator at 1400 K. C. adjust condensers ⑤, ㉖, ㉙ for maximum. Turn dial of set and signal generator to 580 K. C. and adjust condenser ⑲ for maximum output, retune condenser ㉖ at 1400 K. C.

POLICE BAND—Turn wave band switch to Police band (position 2), turn dial of set and signal generator to 2400 K. C. Adjust condensers ⑧ and ⑫ for maximum output.

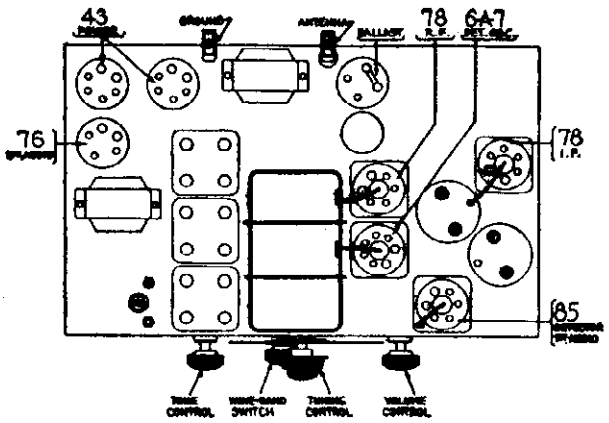

Fig. 1. Tube Sockets, top view

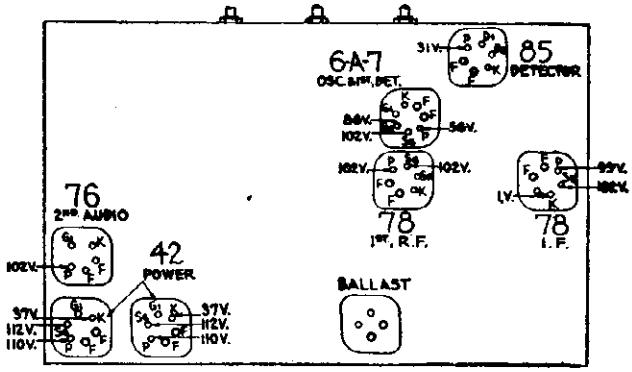

Fig. 2. Bottom View of Sockets with voltage measurements

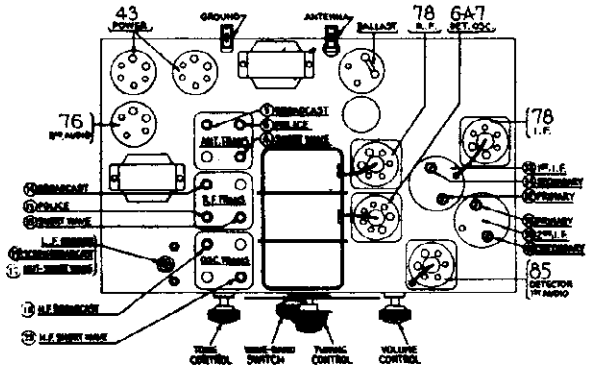

Fig. 5. Location of Compensating Condensers

TYPE CIRCUIT: Superheterodyne with preselector R. F. amplifier, and push-pull output (3 watts); built-in connections for Philco all-wave aerial; aerial selector built into and operated by wave band switch.

POWER CONSUMPTION: 40 watts.

SPEAKER: 641B—K-13; 641X—H-10.

COVERAGE OF EACH BAND: Standard (1), 530 to 1720 K. C.; Police (2), 2200 to 2600 K. C.; Shortwave (3), 5.8 to 18.0 Meg.

TUNING DRIVE: Dual Planetary, ball bearing, 80 to 1 ratio for slow speed tuning, 10 to 1 on main shaft.

TONE CONTROL: 3-position, bass compensation effective in first position, second position (medium), third position (brilliant).

PHILCO RADIO & TELEV. CORP.

MODEL 643
Schematic

WAVE BANDS: Four—(1) Longwave (U. S. weather forecasts); (2) Standard; (3) Police; (4) Shortwave.
COVERAGE OF EACH BAND: Band 1, 150-390 K.C.; Band 2, 540-1740 K.C.; Band 3, 1.75 to 5.8 megacycles; Band 4, 5.8 to 18.0 megacycles.

TUNING DRIVE: Dual planetary, ball bearing, 80 to 1 ratio for slow speed tuning.
TONE CONTROL: 3-Position.
INTERMEDIATE FREQUENCY: 460 K.C.
CURRENT CONSUMPTION: "A" battery, .750 M.A.; "B" battery, 22 M.A.

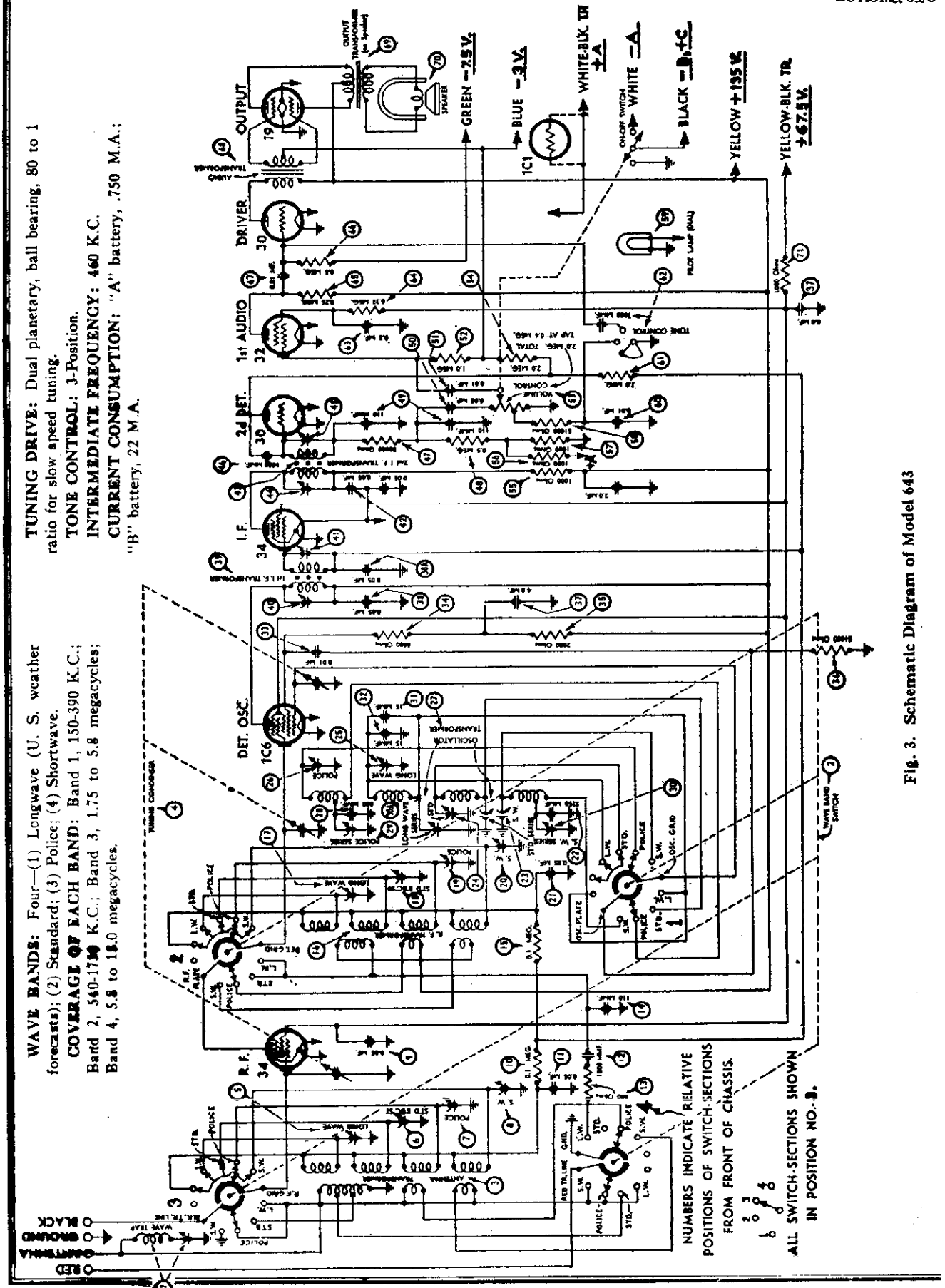

Fig. 3. Schematic Diagram of Model 643

©John F. Rider, Publisher

MODEL 643
Socket, Voltage
Trimmers, Notes
Alignment

PHILCO RADIO & TELEV. CORP.

Adjusting Compensating Condensers

Adjustment of compensating condensers in Model 643 requires an accurate signal generator covering long-wave, standard wave, police and short-wave frequencies.

The locations of the various compensating condensers are shown in Fig. 2. Connect the output meter to the plate and cathode contacts of the type 30 driver tube (using the adapters provided with the "025") and set it at the 0-30 volt range.

I.F.—Set the signal generator at 460 K.C. with attenuator set at minimum, and attach its antenna lead to the grid cap of the 34 I.F. amplifier tube (removing grid lead). Connect ground lead to ground terminal on set or some part of chassis. Set the dial at 55 and turn the waveband switch to position 2 (standard). Adjust the volume control of set to almost maximum (just before oscillator hiss becomes noticeable), and the 088 attenuator so that about one-fourth (¼) scale reading is had on the output meter. With a fibre screwdriver adjust condensers ㊹ and ㊺ (2nd I.F.) for maximum reading on output meter. Turn attenuator of signal generator to minimum and remove its antenna lead from the grid of the 34 I.F. tube, placing it on the grid of the 1C6. Adjust 088 attenuator as before then proceed to adjust condensers ㊸ and ㊷ (1st I.F.) for maximum reading. Then remove the 088 oscillator lead and replace grid connection. Care should be taken to keep the output meter reading during adjustments at about one-fourth scale reading. This should be done by using the 088 attenuator control.

WAVE TRAP—Connect the Signal Generator antenna and ground leads to the antenna and ground posts of the set. With the signal generator operating at 460 K.C. and the set controls adjusted as before for I.F. alignment, adjust wavetrap ① until a minimum reading is obtained in the output meter.

SHORT WAVE—In adjusting the short wave or high frequency band, the R.F. compensator will have a tendency to "pull" or change the frequency of the oscillator. By shunting a padding or variable condenser across the oscillator section of the gang and tuning it so that the second harmonic, instead of the fundamental, beats with the incoming signal, this "pull" can be minimized. The procedure for tuning this band is as follows:

Set the dial of the receiver at 18 megacycles (top scale) and the 088 dial at the same frequency. Connect the shunt condenser to the oscillator section of the gang and tune it so that the second harmonic of the oscillator beats with the 18 M.C. signal from the 088. Next tune padders ㉘ and ⑧ (antenna and R.F.) for maximum reading of the output meter. Disconnect shunt condenser and tune padder ㉗ (osc.) for correct dial calibration. The oscillator frequency, when correctly set, will be higher than that of the incoming signal and the image frequency lower. In order to check this it should be possible to tune the image at approximately 17.1 M.C. by increasing the input from the 088 oscillator.

For the low frequency adjustment of this band, turn the dial to 6.0 M.C., set the signal generator at 6.0 M.C. and adjust condenser ㉙ for maximum reading. This compensator is underneath the chassis and reached from underneath.

POLICE BAND—Turn waveband switch to position 3 from left (police band); set dial at 5.5 and signal generator at 5500 K.C. Adjust condenser ㉖, ⑲ and ⑦ for maximum reading (osc., R.F. and Ant.). Turn dial to 1.8 and signal generator to 1800. Then adjust condenser ㉘ (nut) for maximum output reading.

STANDARD WAVE—Turn waveband switch to position 2 (standard broadcast), set signal generator at 1500 and dial of set at 150. Now adjust the oscillator, R.F., and antenna "Standard" condensers. These are ㉖, ⑲ and ⑥, respectively.

Now turn the dial to 60, set signal generator at 600 and adjust condenser ㉘A (oscillator standard-series) (screw) for maximum reading.

LONG WAVE (Weather) BAND—Turn waveband switch to position 1 (left) (Longwave). Set dial at 35 and signal generator at 350 K.C. Adjust condensers ㉖, ⑰ and ⑤ (oscillator, R.F., and Antenna Longwave) for maximum reading.

Turn dial to 17, signal generator to 170 and adjust condenser ㉙A (longwave series) for maximum reading.

In making these adjustments be sure that the signal level from the 088 is kept as low as possible. If the dial calibration is off, go over the low and high frequency padders in the oscillator circuit of each band until this is corrected.

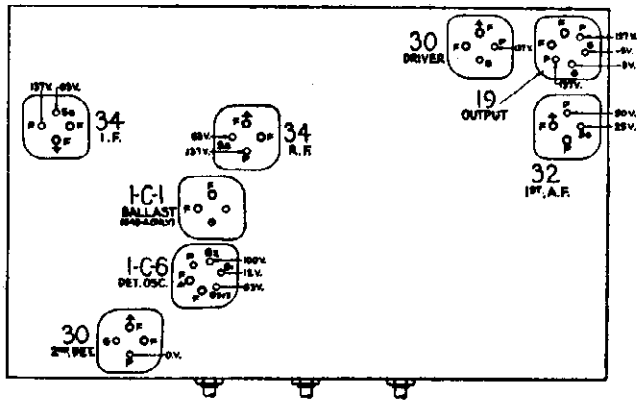

Fig. 1. Tube Sockets as viewed from bottom

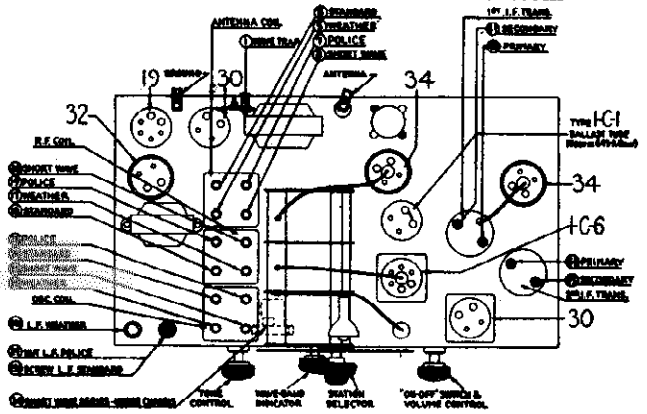

Fig. 2. Locations of Compensating Condensers

General Specifications

POWER SUPPLY: Battery operated Model 643 uses a 2-volt storage battery (Philco 172-R). Model 643-A uses dry A battery (Philco 41-8006). Both sets use a dry combination "B" and "C" battery unit (41-8061). This has a socket into which the plug on the battery cable attached to chassis is to be inserted.

TUBES USED: 1 type 34, pre-selector; 1 type 1C6, Detector-Oscillator; 1 type 34, I. F.; 1 type 30, 2nd Detector and A. V. C.; 1 type 32, 1st A. F.; 1 type 30, driver; 1 type 19 output. Model 643-A has also a ballast tube, type 1C1, to maintain constant filament voltage on all tubes. The socket for this tube exists in both 643 and 643-A chassis, but in the former, the type 1C1 tube is not used, and the filament contacts of the socket are shorted by a metal jumper.

©John F. Rider, Publisher

MODEL 643
Chassis
Parts List

PHILCO RADIO & TELEV. CORP.

PRICES ARE SUBJECT TO CHANGE WITHOUT NOTICE

Replacement Parts for Model 643

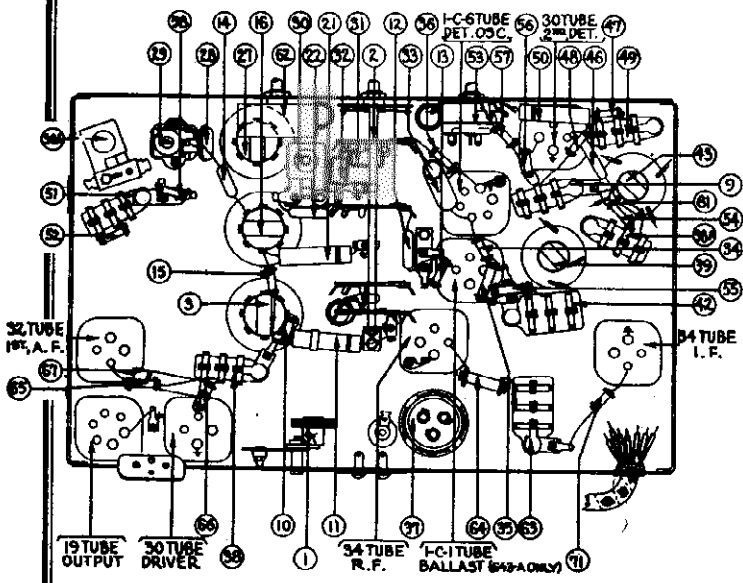

Fig. 4. Bottom View of Chassis

	Description	Part No	List Price
(1)	Wave Trap Assembly	38-6850	$1.10
(2)	Wave Band Switch	42-1128	2.50
(3)	Antenna Transformer	32-1806	3.25
(4)	Condenser Gang Assembly	31-1634	5.50
(5) (6) (7) (8)	Padder, Padder, Padder, Padder	Part of 32-1806 (3)	....
(9)	Condenser (.05 mfd.)	3615-SG	.35
(10)	Resistor (100,000 ohms)	6099	.20
(11)	Condenser (.05 mfd. tubular)	30-4020	.35
(12)	Condenser (Mica 1800 mmf.)	6018	.40
(13)	Resistor (500 ohms)	33-1207	.20
(14)	Condenser (Mica 110 mmf.)	30-1031	.35
(15)	Resistor (100,000 ohms)	6099	.20
(16)	R.F. Transformer	32-1807	3.00
(17) (18) (19) (20)	Padder, Padder, Padder, Padder	Part of 32-1807 (16)	....
(21)	Condenser (Tubular .05 mf.)	30-4020	.35
(22)	Condenser (Mica 3250 mmf.)	30-1061	.45
(23) (24) (25) (26)	Padder, Padder, Padder, Padder	Part of 32-1808 (27)	....
(27)	Oscillator Transformer	32-1808	2.50
(28)	Condenser (Mica 400 mmf.)	30-1049	.35
(29)	Padding Condenser	31-6027	.70
(30)	Padding Condenser	04000-R	.45
(30)A	Padding Condenser	04000-F	.25
(31)	Condenser (Mica 15 mmf.)	30-1030	.35
(32)	Condenser (Mica 15 mmf.)	30-1030	.35
(33)	Condenser (Tubular .01 mf.)	30-4145	.25
(34)	Resistor (8000 ohms)	5838	.20
(35)	Resistor (2000 ohms)	6084	.20
(36)	Resistor (51,000 ohms)	6098	.20
(37)	Electrolytic Condenser	30-2127	1.50
(38)	Condenser (0.05 mf.)	3615-SG	.35
(38)A	Condenser (.05 mfd.)	3615-SG	.35
(39)	1st I.F. Transformer	32-1809	1.50
(40) (41)	Padder, Padder	Part of (39)	....
(42)	Condenser (Twin 0.05 mf.)	3615-DU	.40
(43)	2nd I.F. Transformer	32-1810	2.00
(44) (45)	Padder, Padder	Part of (43)	....
(46)	Condenser (Mica 6000 mmf.)	6359	.60
(47)	Resistor (50,000 ohms)	6098	.20
(48)	Resistor (.5 meg.)	4410	.20
(49)	Condenser (Twin 110 mmf.)	30-1031	.35
(50)	Condenser (.05 mf.)	3615-SU	.35
(51)	Condenser (.01 mf.)	3903-SU	.25
(52)	Resistor (1 meg.)	33-1096	.20
(53)	Volume Control and Switch	33-5119	1.10
(54)	Resistor (2 meg.)	33-1025	.20
(55)	Resistor (1000 ohms)	33-1028	.20
(56)	Resistor (1000 ohms)	33-1028	.20
(57)	Resistor (1000 ohms)	33-1028	.20
(58)	Resistor (50,000 ohms)	6098	.20
(59)	Pilot Lamp	5316	.35
(60)	Condenser (.01 mf.)	3903-SG	.25
(61)	Resistor (2 meg.)	33-1025	.20
(62)	Tone Control	30-4352	.75
(63)	Condenser (0.3 mf.)	6287-DG	.40
(64)	Resistor (330,000 ohms)	6046	.20
(65)	Resistor (250,000 ohms)	4410	.20
(66)	Resistor (500,000 ohms)	6097	.20
(67)	Condenser (0.01 mf.)	3903-SU	.25
(68)	Input Transformer	32-7473	1.75
(69)	Output Transformer	32-7472	1.50
(70)	Voice Coil and Cone Assembly (K-7)	36-3159	.80
(71)	Resistor (1000 ohms)	5837	.20
	Battery Cable Assembly	41-3144	1.50
	Tube Shield Base (2)	28-2725	.03
	Tube Shield Base (3)	8004	.01
	Tube Shield Body (2)	28-2726	.10
	Tube Shield Body (3)	8005	.10
	4-prong Tube Socket (5)	27-6044	.10
	5-prong Tube Socket (1)	27-6042	.10
	6-prong Tube Socket (2)	27-6036	.11
	Speaker Socket (1)	27-6043	.08
	Dial Scale	27-5124	.25
	Knobs (1)	27-4206	.12
	Knobs (1)	27-4207	.10
	Knobs (2)	27-4208	.10
	Knobs (1)	27-4219	.10
	Bezel	28-2933	.55
	Bezel Glass	27-8009	.55
	Bezel Frame Gasket	27-7972	....
	Chassis Mounting Screw	W-1496-H	1.60 per C.
	Chassis Mounting Washer	27-4021	1.40 per C.
	Chassis Mounting Cushion	27-4202	.03
	"A" Battery	172R	....
	"B" and "C" Battery	P9068	....

©John F. Rider, Publisher

MODEL 645
Socket, Voltage
Chassis, Parts

PHILCO RADIO & TELEV. CORP.

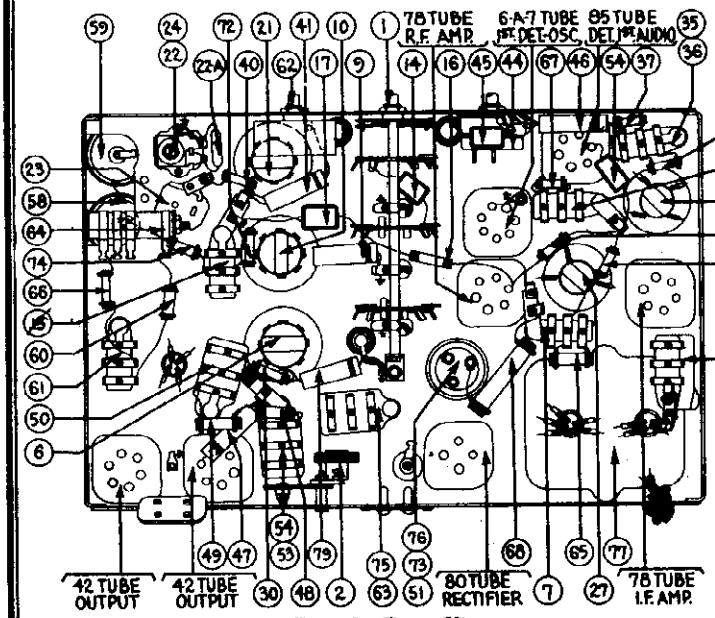

Fig. 6. Base View

TUBE SOCKET VOLTAGES
(Measured from Tube Contact to Gnd.)

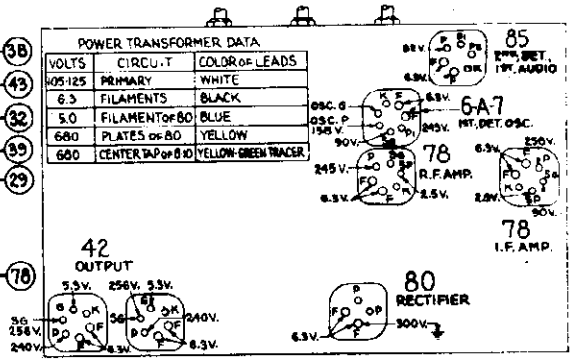

Fig. 3. Tubes as Viewed from Bottom

The voltages at the points indicated by the arrows above were obtained with a Philco type 025 Circuit Tester which contains a high resistance (1000 ohms per volt) voltmeter. Volume control at minimum, waveband switch at standard broadcast. K31 speaker.

Schematic Number	Part and Description	Part No.	List Price
①	Wave Band Switch	42-1153	$2.00
②	Wave Trap	38-6850	1.10
③	Compensater (Ant. Standard)		
④	Compensater (Ant. Police)	31-6058	.60
⑤	Compensater (Ant. Short-Wave)		
⑥	Ant. Transformer	32-1867	3.00
⑦	Condenser (.09 mf. Bakelite)	4989-SG	.35
⑧	Pilot Lamp (Dial)	34-2039	.15
⑨	Condenser (.05 mf. Tubular)	30-4020	.20
⑩	Det. Transformer	32-1868	3.00
⑪	Compensater (Det. Standard)		
⑫	Compensater (Det. Police)	31-6063	.50
⑬	Compensater (Det. Short-Wave)		
⑭	Condenser (50 mmf.)	30-1029	.20
⑮	Condenser (.05 Bakelite)	3615-SG	.35
⑯	Resistor (51,000 ohms, ¼ watt)	33-351143	.20
⑰	Condenser (.00025 mf. Mica)	30-1056	.40
⑱	Compensater (Osc. Standard)		
⑲	Compensater (Osc. Police)	31-6058	.60
⑳	Compensater (Osc. Short-Wave)		
㉑	Osc. Transformer	32-1976	1.75
㉒	Compensater (Short-Wave Series)	31-6027	.70
㉒a	Condenser (.0025 mf. Mica)	7006	.40
㉓	Compensater (Police Series)	31-6073	.50
㉔	Compensater (Standard Series)	Part of ㉒	
㉕	Tuning Condenser Assy.	31-1555	4.50
㉖	Compensater (1st I.F. Pri.)	31-6053	.50
㉗	1st I.F. Transformer	32-1917	1.75
㉘	Compensater (1st I.F. Sec.)	Part of ㉒	
㉙	Resistor (1.0 Meg., ¼ watt)	33-510143	.20
㉚	Resistor (51,000 ohm, ¼ watt)	33-351143	.20
㉛	Compensater (2nd I.F. Pri.)	31-6053	.50
㉜	2nd I.F. Transformer	32-1836	1.60
㉝	Compensater (2nd I.F. Sec.)	Part of ㉒	
㉞	Condenser (.00011 mf. Mica)	30-1031	.20
㉟	Condenser (.00011 mf. Twin Bakelite)	8035-DG	.25
㊱	Condenser (.00011 mf.)	Part of ㉟	
㊲	Resistor (51,000 ohm, ¼ watt)	33-351143	.20
㊳	Resistor (330,000 ohm, ¼ watt)	33-433133	.20
㊴	Resistor (1.0 Meg., ¼ watt)	33-510143	.20
㊵	Resistor (25,000 ohm, ½ watt)	33-325243	.20
㊶	Condenser (.05 mf. Tubular)	30-4020	.20
㊷	Condenser (.015 mf.)	Part of ㊸	
㊸	Condenser (.01 mf. Bakelite)	3903-SU	.25
㊹	Volume Control (1.0 Meg. ohm)	33-5113	1.45
㊺	Condenser (.00011 mf. Mica)	30-1031	.20
㊻	Condenser (.05 mf. Tubular)	30-4020	.20
㊼	Condenser (.06 mf. Tubular)	30-4123	.20
㊽	Resistor (32,000 ohm, ½ watt)	33-332333	.20
㊾	Resistor (99,000 ohm, ½ watt)	33-399343	.20
㊿	Resistor (.3 mf. Twin Bakelite)	6287-DU	.40
(51)	Elec. Condenser (1.0 mf., 1.0 mf., 2.0 mf.)	30-2080	1.85
(52)	Audio Input Transformer	32-7532	4.25
(53)	Condenser (.002 mf. Twin Bakelite)	7296-DU	.30
(54)	Condenser (.002 mf.)	Part of (53)	
(55)	Output Transformer	2585	1.25
(56)	Voice Coil Cone Assy. (B. G. K31)	36-3159	.80
(57)	Field Coil Assy. (B. G. K. 31)	36-3463	3.75
(58)	Electrolytic Condenser (8. mf.)	30-2025	1.35
(59)	Electrolytic Condenser (12 mf.)	30-2117	1.50
(60)	Resistor (25,000 ohm, ½ watt)	33-325243	.20
(61)	Condenser (.05 mf. Bakelite)	3615-SG	.35

Schematic Number	Part and Description	Part No.	List Price
(62)	Program Control	30-4406	$0.75
(63)	Condenser (.09 mf. Twin Bakelite)	4989-DG	.40
(64)	B.C. Resistor (136 ohm, 24 ohm)	33-3236	.20
(65)	Resistor (20,000 ohm, 1 watt)	33-320433	.20
(66)	Resistor (490,000 ohm, ¼ watt)	33-449143	.20
(67)	Resistor (1.0 meg. ohm, ¼ watt)	33-510143	.20
(68)	Resistor (16,000 ohm, 3 watt)	33-316633	.30
(69)	Pilot Lamp (Shadow Meter)	34-2064	.09
(70)	Shadow Meter	45-2083	2.50
(71)	Resistor (15,000 ohm, ¼ watt)	33-315133	.20
(72)	Electrolytic Condenser (1.0 mf.)	Part of (68)	
(73)	Resistor (15,000 ohm, ¼ watt)	33-315133	.20
(74)	Condenser (.09 mf.)	Part of (63)	
(75)	Electrolytic Condenser (2.0 mf.)	Part of (51)	
(76)	Power Transformer (110 V., 60 cycle)	32-7462	6.00
(77)	Condenser (.015 mf. Twin Bakelite)	3793-DG	.40
(78)	Condenser (.05 mf. Tubular)	30-4020	.20
	Power Transformer (115 V., 25 cycle)	32-7407	9.00
	Power Transformer (220 V., 50-60 cycle)	32-7464	6.50
	4-prong Socket	27-6044	.10
	6-prong Socket	27-6036	.11
	7-prong Socket	27-6037	.11
	Speaker Socket	27-6043	.08
	R.F. Transformer Shield	38-6921	.35
	I.F. Transformer Shield	38-6808	.25
	Tube Shield Base	28-2725	.03
	Tube Shield Body	28-2726	.10
	Shadow Meter Light Shield	28-2917	.02
	Electrolytic Condenser Clamp	6440	.05
	Electrolytic Condenser Insulator	27-7194	.01
	Dial Scale	25-5165	.30
	Dial Hub Assy.	31-1724	.15
	Screen Bracket Assy.	29-3061	.07
	Scale Guard	27-8140	.01
	Glowing Arrow Mask	27-5160	.20
	Glowing Arrow Screen	27-5159	.10
	Mask Arm	29-3274	.03
	Link	29-3338	.03
	Coupling	29-3339	.06
	Sub. Base Mtg. Foot	29-2959	.03
	Chassis Mtg. Screw	W-1496-A	1.60C
	Chassis Mtg. Washer (Rubber)	27-4201	1.40C
	Chassis Mtg. Cushion (Rubber)	27-4202	.03
	Knob (Tuning)	27-4206	.12
	Knob (Slow Speed Tuning)	27-4207	.10
	Knob (Volume, Tone)	27-4208	.10
	Knob (Wave Band)	27-4225	.10
	Bezel	28-3164	.50
	Bezel Mounting Screw	W-1494	.30C
	Bezel Glass	27-8113	.07
	Bezel Glass Gasket	27-8036	.01
	Shadow Screen	27-5120	1.50C
	Speaker Cable	02722	.30
	Bottom Shield	38-7189	.40
	Mask	28-3433	.25
	Pilot Lamp Bracket Assy.	38-6789	.50
	Front Bumper	27-4200	3.75C
	Speaker Mtg. Bolt	29-3128	.02
	Speaker Mtg. Nut	W-124-A	.35C
*	Voice Coil Cone Assy. (Furn. H-21)	02625	1.20
□	Field Coil Assy. (Furn. H-21)	36-3461	3.75
	G. Elec. Condenser (2.0 mf.)	Part of 30-2080	
	F. Resistor (32,000 ohm)	3525	.20

PRICES SUBJECT TO CHANGE WITHOUT NOTICE

©John F. Rider, Publisher

PHILCO RADIO & TELEV. CORP.

MODEL 645
Schematic

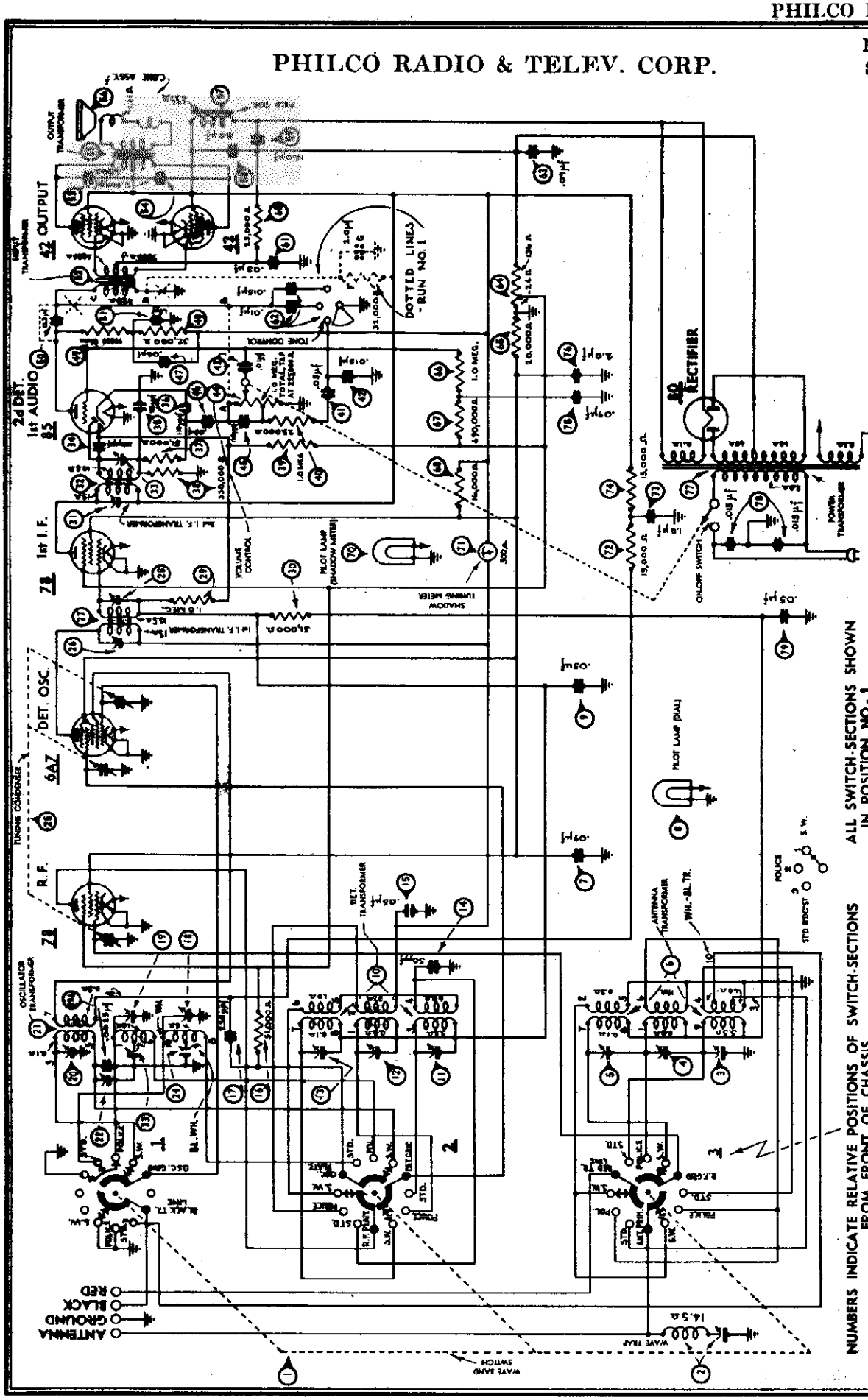

NUMBERS INDICATE RELATIVE POSITIONS OF SWITCH-SECTIONS FROM FRONT OF CHASSIS.

ALL SWITCH-SECTIONS SHOWN IN POSITION NO. 1

TYPE CIRCUIT: Superheterodyne, with preselector R.F. amplifier, and push-pull pentode output (7 watts); built in connections for Philco All-wave aerial; aerial selector built into and operated by wave-band switch.

COVERAGE OF EACH BAND: Band 1, 5.75–18 M.C.; Band 2, 1.75–5.8 M.C.; Band 3, 540–1750 K.C.

TUNING DRIVE: Dual planetary, ball bearing, 80 to 1 ratio for slow-speed tuning; glowing arrow wave band indicator.

POWER CONSUMPTION: 85 watts.

SPEAKER: 645 Baby Grand Model—K31; Furniture Model—H21.

POWER SUPPLY: 115v., 60 cycle A.C.

INTERMEDIATE FREQUENCY: 460 K.C.

©John F. Rider, Publisher

MODEL 645
Trimmers
Coil Data
Alignment

PHILCO RADIO & TELEV. CORP.

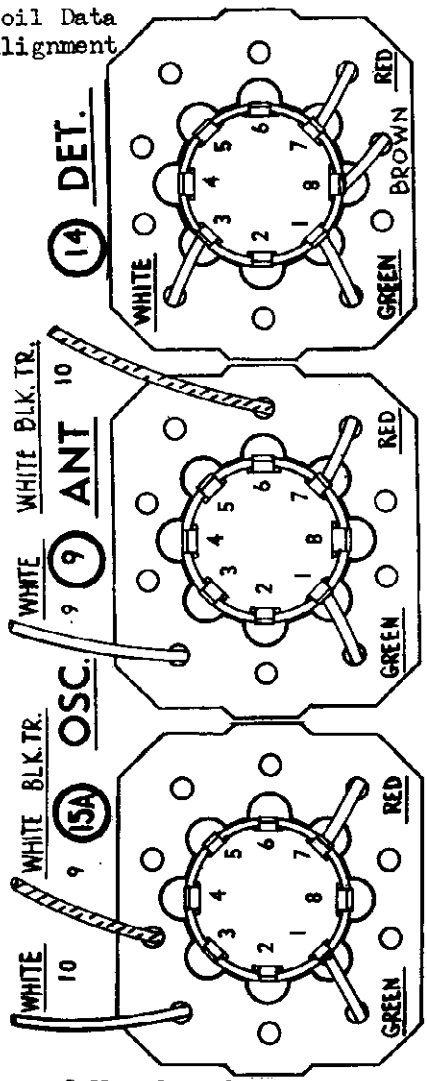

Fig. 1. R.F. Transformers

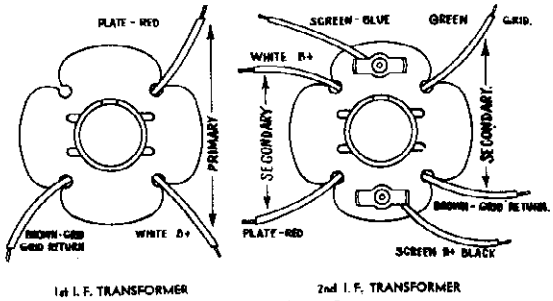

Fig. 2. I.F. Transformers

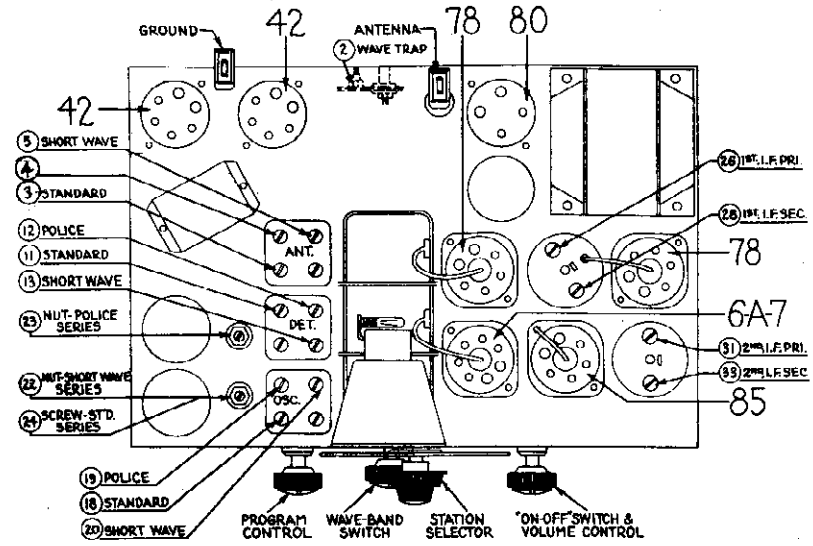

Fig. 4. Location of Compensating Condensers

Adjusting Compensating Condensers

The locations of the various compensating condensers are shown in Fig. 4. Connect the output meter to the plate contacts of the type 42 output tubes (using the adapters provided with the "025") and set it at the 0-30 volt range.

INTERMEDIATE FREQUENCY: Set the signal generator at 460 K.C. with attenuator set at minimum, connect a .001 mf. condenser in series with its antenna lead and attach it to the grid cap of the 78 I.F. amplifier tube. Connect ground lead to ground terminal on set. Set the dial at 55 and turn the waveband switch to position 3 (extreme left). Adjust the volume control of set to almost maximum, and the 088 attenuator so that about one-fourth (¼) scale reading is had on the output meter. With a fibre screwdriver adjust condensers (31) and (33) (2nd I.F.) for maximum reading on output meter. Turn attenuator of signal generator to minimum and remove its antenna lead from the grid of the 78 I.F. tube; place it on the grid of the 6A7. Adjust 088 attenuator as before, then proceed to adjust condensers (28) and (26) (1st I.F.) for maximum output meter reading. Then remove the 088 oscillator lead. Care should be taken to keep the output meter reading during adjustments at about one-fourth scale reading. This should be done by using the 088 attenuator control.

WAVE TRAP: Connect the Signal Generator antenna and ground leads to the antenna and ground posts of the set. With the signal generator operating at 460 K.C. and the set controls adjusted as before for I.F. alignment, adjust wave trap (2) until a minimum reading is obtained in the output meter.

SHORT WAVE:. In adjusting the short wave or high frequency band, the det. compensator will have a tendency to "pull" or **change** the frequency of the oscillator. By shunting a padding or variable condenser (about .00025 Mf.) across the oscillator section of the gang (front section) and tuning it so that the second harmonic, instead of the fundamental, beats with the incoming signal, this "pull" can be minimized. The procedure for tuning this band is as follows:

Set the dial of the receiver at 18 megacycles (top scale) and the 088 dial at the same frequency. Turn wave band switch to position 1 (extreme right). Connect the shunt condenser to the oscillator section of the gang and tune it so that the second harmonic of the oscillator beats with the 18 M.C. signal from the 088. Next tune condensers (5) and (19) (antenna and det.) for maximum reading of the output meter. Disconnect shunt condenser and tune condenser (24) (osc.) for correct dial calibration. The oscillator frequency, when correctly set, will be higher than that of the incoming signal and the image frequency lower. In order to check this it should be possible to pick up the image at approximately 17.1 M.C. by increasing the input from the 088 oscillator.

For the low frequency adjustment of this band, turn the dial to 6.0 M.C., set the signal generator at 6.0 M.C. and adjust condenser (22) (nut) for maximum output meter reading. Readjust condenser (24) at 18.0 M.C.

POLICE: Turn wave band switch to position 2 (center), set signal generator at 5500 and dial of set at 5.5. Adjust condensers (18), (4) and (12) (osc., ant., and det.) for maximum output. Turn the set dial to 1.8 and the signal generator to 1800. Adjust condenser (23) (nut) (osc. series) for maximum output meter reading.

STANDARD WAVE: Turn waveband switch to position 3 (extreme left), set signal generator at 1500 and dial of set at 150. Now adjust the oscillator, antenna and det. "Standard" condensers. These are (18), (3) and (11) respectively. Turn the dial to 60, set signal generator at 600 and adjust condenser (24) (oscillator standard series), (screw) for maximum output meter reading.

©John F. Rider. Publisher

PHILCO RADIO & TELEV. CORP.

MODEL 651
Schematic

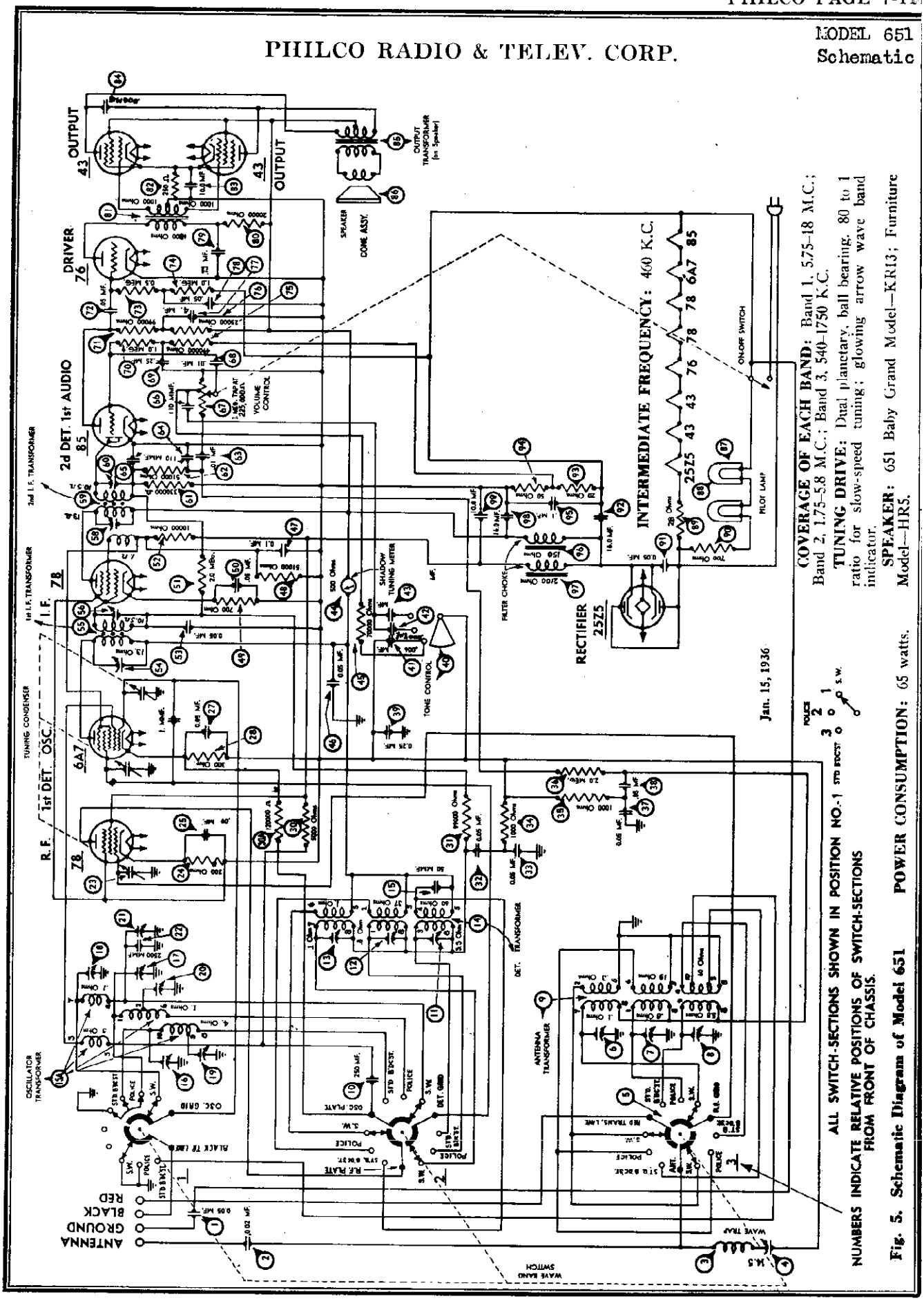

COVERAGE OF EACH BAND: Band 1, 5.75–18 M.C.; Band 2, 1.75–5.8 M.C.; Band 3, 540–1750 K.C.

TUNING DRIVE: Dial planetary, ball bearing, 80 to 1 ratio for slow-speed tuning; glowing arrow wave band indicator.

SPEAKER: 651 Baby Grand Model—KR13; Furniture Model—HR5.

POWER CONSUMPTION: 65 watts.

ALL SWITCH-SECTIONS SHOWN IN POSITION NO. 1

NUMBERS INDICATE RELATIVE POSITIONS OF SWITCH-SECTIONS FROM FRONT OF CHASSIS.

Fig. 5. Schematic Diagram of Model 651

©John F. Rider, Publisher

MODEL 651
Socket, Trimmers
Alignment

PHILCO RADIO & TELEV. CORP.

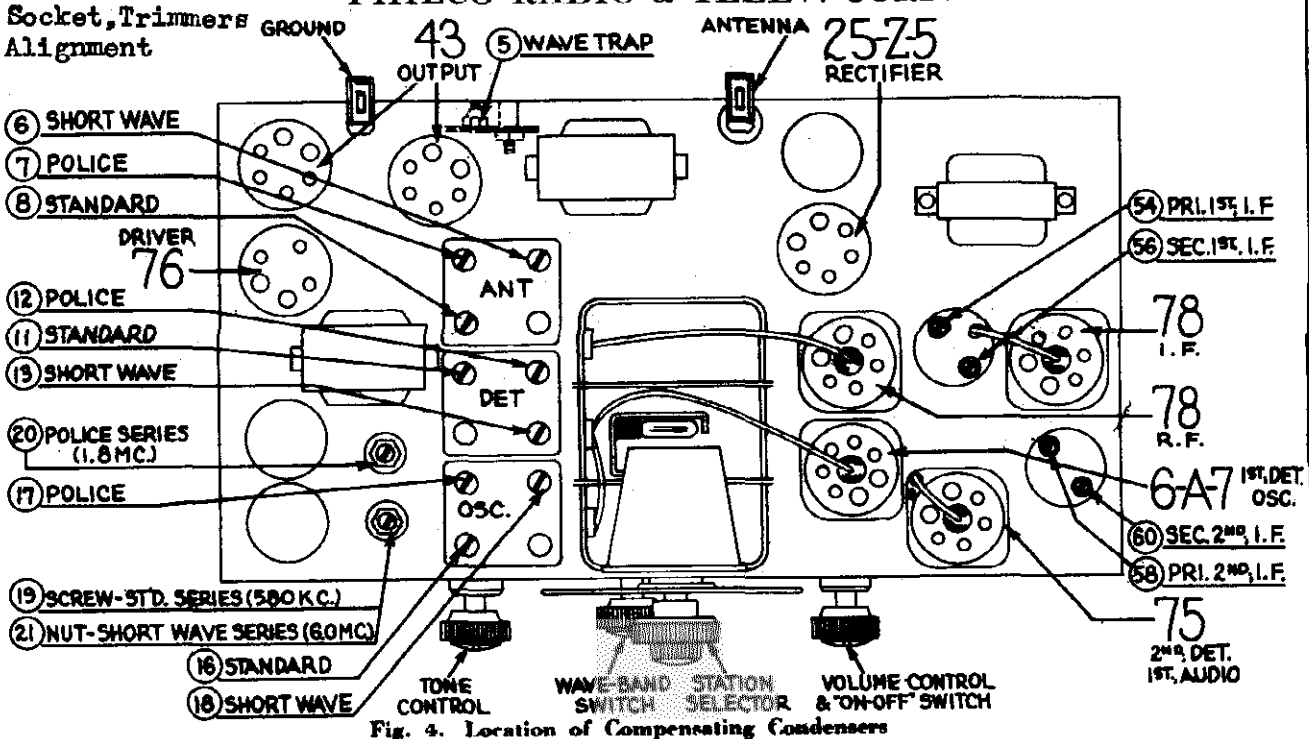

Fig. 4. Location of Compensating Condensers

Adjusting Compensating Condensers

Adjustment of compensating condensers in Model 651 requires an accurate signal generator covering I.F., standard-wave, police and short-wave frequencies. The **PHILCO *Model 088 All-Wave Signal Generator,*** *having a continuous* range of from 100 to 20,000 K.C., is ideal for this purpose.

An output meter is also needed. **PHILCO Model 025 Circuit Tester** includes a high grade output meter.

Philco No. 3164 fibre wrench and No. 27-7059 fibre-handled screwdriver complete the equipment needed for making these adjustments. The locations of the various compensating condensers are shown in Fig. 4. Connect the output meter to the plate contacts of the type 43 output tubes (using the adapters provided with the "025") and set it at the 0-30 volt range.

INTERMEDIATE FREQUENCY: Set the signal generator at 460 K.C. with attenuator set at minimum, connect a .001 mf. condenser in series with its antenna lead and attach it to the grid cap of the 78 I.F. amplifier tube. Connect ground lead to ground terminal on set. Set the dial at 55 and turn the waveband switch to position 3 (extreme left). Adjust the volume control of set to almost maximum, and the 088 attenuator so that about one-fourth (¼) scale reading is had on the output meter. With a fibre screwdriver adjust condensers ㊽ and ㊾ (*2nd I.F.*) for maximum reading on output meter. Turn attenuator of signal generator to minimum and remove its antenna lead from the grid of the 78 I.F. tube; place it on the grid of the 6A7. Adjust 088 attenuator as before, then proceed to adjust condensers ㊹ and ㊺ (1st I.F.) for maximum output meter reading. Then remove the 088 oscillator lead. Care should be taken to keep the output meter reading during adjustments at about one-fourth scale reading. This should be done by using the 088 attenuator control.

WAVE TRAP: Connect the Signal Generator antenna and ground leads to the antenna and ground posts of the set. With the signal generator operating at 460 K.C. and the set controls adjusted as before for I.F. alignment, adjust wave trap ⑤ until a minimum reading is obtained in the output meter.

SHORT WAVE: In adjusting the short wave or high *frequency band, the det.* compensator will have a tendency to "pull" or **change** the frequency of the oscillator. By shunting a padding or variable condenser (about .00025 Mf.) across the oscillator section of the gang (front section) and tuning it so that the second harmonic, instead of the fundamental, beats with the incoming signal, this "pull" can be minimized. The procedure for tuning this band is as follows:

Set the dial of the receiver at 18 megacycles (top scale) and the 088 dial at the same frequency. Turn wave band switch to position 1 (extreme right). Connect the shunt condenser to the oscillator section of the gang and tune it so that the second harmonic of the oscillator beats with the 18 M.C. signal from the 088. Next tune condensers ⑥ and ⑬ (antenna and det.) for maximum reading of the output meter. Disconnect shunt condenser and tune condenser ⑲ (osc.) for correct dial calibration. The oscillator frequency, when correctly set, will be higher than that of the incoming signal and the image frequency lower. In order to check this it should be possible to pick up the image at approximately 17.1 M.C. by increasing the input from the 088 oscillator.

For the low frequency adjustment of this band, turn the dial to 6.0 M.C., set the signal generator at 6.0 M.C. and adjust condenser ㉑ (nut) for maximum output meter reading. Readjust condenser ⑱ at 18.0 M.C.

POLICE: Turn wave band switch to position 2 (center), set signal generator at 5500 and dial of set at 5.5. Adjust condensers ⑦, ⑫ and ⑰ (ant., det., and osc.) for maximum output. Turn the set dial to 1.8 and the signal generator to 1800. Adjust condenser ⑳ (osc. series) for maximum output meter reading.

STANDARD WAVE: Turn waveband switch to position 3 (extreme left), set signal generator at 1500 and dial of set at 150. Now adjust the oscillator, antenna and det. "Standard" condensers. These are ⑯, ⑪ and ⑧ respectively.

Now turn the dial to 60, set signal generator at 600 and adjust condenser ⑲ (oscillator standard series), (screw) for maximum output meter reading.

©John F. Rider, Publisher

Parts List

PHILCO RADIO & TELEV. CORP.

MODEL 651
Voltage, Chassis

TUBE SOCKET VOLTAGES
(Measured from Tube Contact to B—)

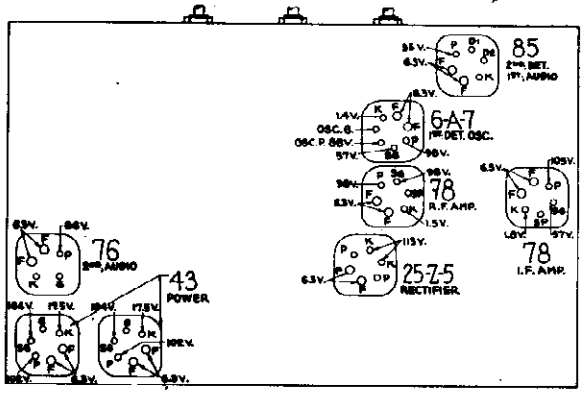

Fig. 3. Tubes as Viewed from Bottom

The voltages at the points indicated by the arrows above were obtained with a Philco type 025 Circuit Tester which contains a high resistance (1000 ohms per volt) voltmeter. Volume control at minimum, waveband switch at standard broadcast. KR-13 speaker.

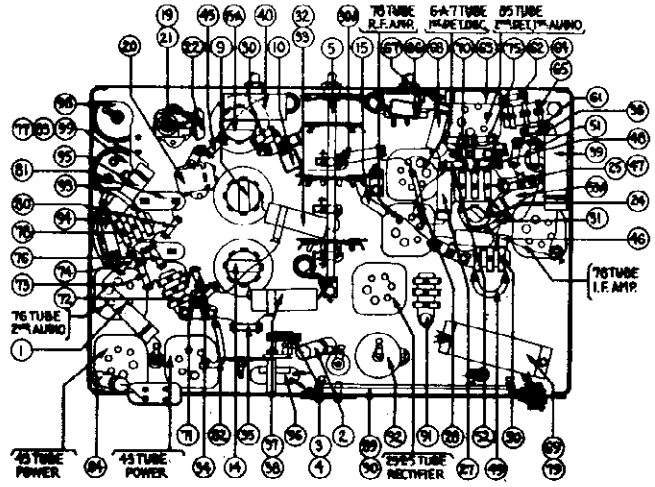

Fig. 6. Base View

NOTE: For Fig. 1. R.F. Transformers, For Fig. 2. I.F. Transformers, See MODEL 645.

Model 651

Schematic Number	Part and Description	Part No.	List Price
①	Condenser (.05 mf. Tubular)	30-4020	$0.20
②	Condenser (.002 mf.) Tubular	30-4177	.25
③	Wave Trap	38-6972	.75
④	Compensating Cond.	Part of ⑧	....
⑤	Wave Band Switch	42-1151	1.20
⑥	Compensating Condenser (Ant. S. Wave)	31-6058	.60
⑦	Compensating Condenser (Ant. Police)		
⑧	Compensating Condenser (Ant. Std.)		
⑨	Aerial Transformer	32-1867	3.00
⑩	Condenser (.00025 mf. Mica)	30-1032	.25
⑪	Compensating Condenser (Det. Std.)	31-6063	.50
⑫	Compensating Condenser (Det. Pol.)		
⑬	Compensating Condenser (Det. S. Wave)		
⑭	Det. Transformer	32-1868	3.00
⑮	Condenser (mica .00005 mf.)	30-1029	.20
⑮a	Oscillator Transformer	32-1976	1.75
⑯	Compensating Condenser (Osc. Std.)	31-6058	.60
⑰	Compensating Condenser (Osc. Pol.)		
⑱	Compensating Condenser (Osc. S. Wave)		
⑲	Compensating Condenser (Series Std.) (Screw)	31-6027	.70
⑳	Compensating Condenser (Series Pol.)	31-6073	.50
㉑	Compensating Condenser (Series S. Wave) (Nut)	Part of ⑱	....
㉒	Condenser (mica .0025 mf.)	7006	.40
㉓	Tuning Condenser Assy.	31-1555	4.50
㉔	Resistor (200 ohms wire wound)	33-3120	.25
㉕	Condenser (.09 mf. twin bakelite)	4989-DU	.40
㉖	Condenser (1 MMf., wires twisted)	.....	....
㉗	Condenser (.05 mf., tubular)	30-4020	.20
㉘	Resistor (300 ohm, wire wound)	33-3010	.20
㉙	Resistor (13,000 ohms)	8267	.20
㉚	Resistor (5,000 ohms)	33-250123	.20
㉚a	Resistor (120,000 ohms)	33-412334	.20
㉛	Resistor (99,000 ohms)	33-399344	.20
㉜	Condenser (.05 mf. twin tubular)	30-4394	.35
㉝	Condenser (.05 mf.)	Part of ㊶	....
㉞	Resistor (1000 ohms)	33-210133	.20
㉟	Resistor (1000 ohms)	33-210133	.20
㊱	Resistor (2 meg.)	33-520143	.20
㊲	Condenser (.05 mf. twin tubular)	30-4394	.35
㊳	Condenser (.05 mf.)	Part of ㊵	....
㊴	Condenser (.25 mf. tubular)	30-4146	.25
㊵	Tone Control	30-4382	....
㊶	Condenser (.015 mf.)	Part of ㊸	....
㊷	Condenser (.0007 mf.)		
㊸	Condenser (.0012 mf.)		
㊹	Shadow Meter	45-2083	2.50
㊺	Resistor (70,000 ohms, ¼ watt)	33-370133	.20
㊻	Condenser (.05 mf. tubular)	30-4020	.20
㊼	Condenser (.09 mf.)	Part of ㊸	....
㊽	Resistor (51,000 ohms)	33-351143	.20
㊾	Resistor (700 ohms, wire wound)	33-3124	.25
㊿	Condenser (.05 mf. bakelite)	3615-OSU	.35
(51)	Resistor (2 meg.)	33-520143	.20
(52)	Resistor (10,000 ohms)	33-310133	.20
(53)	Condenser (.05 mf. tubular)	30-4020	.20
(54)	Compensating Condenser (1st I.F. Pri.)	Part of (56)	....
(55)	1st I.F. Transformer	32-1835	1.60
(56)	Compensating Condenser (1st I.F. Sec.)	Part of (56)	....
(57)	Compensating Condenser (2nd I.F. Pri.)	Part of (56)	....
(58)	2nd I.F. Transformer	32-1978	2.00
(59)	Compensating Condenser (2nd I.F. Sec.)	Part of (56)	....
(60)	Resistor (330,000 ohms)	33-433133	.20
(61)	Resistor (51,000 ohms)	33-351143	.20
(62)	Condenser (.01 mf. tubular)	30-4169	.20
(63)	Condenser (.0001 mf. twin bakelite)	8035-ODU	.25
(64)	Condenser (.0001 mf.)	Part of (56)	....
(65)	Condenser (mica .00011 mf.)	30-1031	.20
(66)	Volume Control	33-5116	1.45
(67)	Condenser (.01 mf. tubular)	30-4169	.20
(68)	Condenser (4—.75 mf. metal can)	30-4405	....
(69)	Resistor (1 meg.)	33-510143	.20
(70)	Resistor (99,000 ohms)	33-399344	.20
(71)	Condenser (.05 mf. bakelite)	3615-SU	.35
(72)	Resistor (490,000 ohms)	33-449344	.20
(73)	Resistor (99,000 ohms)	33-399344	.20
(74)	Resistor (490,000 ohms)	33-449344	.20
(75)	Resistor (25,000 ohms)	33-325143	.20
(76)	Condenser (4—10—10 mf.) (electrolytic)	30-2147	1.85
(77)	Condenser (.05 mf. bakelite)	3615-SU	.35
(78)	Condenser (.75 mf.)	Part of (80)	....
(79)	Resistor (20,000 ohms)	33-320133	....
(80)	Input Transformer	32-7211	2.25
(81)	Resistor (250 ohms, wire wound)	33-3046	.25
(82)	Condenser (10 mf.)	Part of (83)	....
(83)	Condenser (.006 mf. tubular)	30-4024	.25
(84)	Output Transformer	32-7508	1.50
(85)	Cone & Voice Coil Assy. (651-B)	36-3540*	.80
(86)	Pilot Lamp, 6.3 volt (Dial)	34-2068	.16
(87)	Pilot Lamp, 6.3 volt (Shadow Meter)	34-2068	.16
(88)	Resistor (700 ohms, wire wound)	33-3231	.75
(89)	Resistor (28 ohms)	Part of (80)	....
(90)	Condenser (.05 mf. bakelite)	3615-SU	.35
(91)	Condenser electrolytic (16 mf.)	30-2124	.75
(92)	Resistor (20 ohms, wire wound)	33-3043	.25
(93)	Resistor (50 ohms, wire wound)	33-3044	.25
(94)	Condenser (.09 mf. tubular)	30-4170	.25
(95)	Choke (Filter)	32-7527	1.50
(96)	Choke (Filter)	32-7528	1.35
(97)	Electrolytic Condenser (16 mf.)	30-2124	.75
(98)	Electrolytic Condenser (10 mf.) yellow terminal	Part of (99)	....
	R.F. Shield Assy.	38-6938	.35
	I.F. Shield Assy.	38-6808	.25
	Tube Shield	28-2726	.10
	Tube Shield Base	28-2725	.03
	5 Prong Socket	27-6035	.11
	6 Prong Socket	27-6036	.11
	7 Prong Socket	27-6037	.11
	Speaker Plug Socket	27-6043	.08
	Screen Bracket Assy.	31-1749	....
	Screen	27-5159	.10
	Mask	27-5160	.20
	Mask Arm	29-3274	.03
	Shaft Coupling	29-3339	.06
	Dial Scale	27-5170	.30
	Hub Assembly	31-1724	.15
	Knob (Tuning)	27-4206	.12
	Knob (Vernier)	27-4207	.10
	Knob (Volume)	27-4208	.10
	Knob (Tone Control)	27-4291	....
	Knob (Wave Switch)	27-4225	.10
	Bezel	28-3164	.50
	Bezel Glass	27-8113	.07
	Bezel Mounting Screws	W-1494	.30C
	Speaker Cable	36-3009	.35
	Chassis Mounting Bolt	W-1496-A	1.60C
	Chassis Mounting Washer (Rubber)	27-4201	1.40
	Chassis Mounting Washer (Cushion)	27-4202	.03
	Elec. Condenser Clamp	6440	.05
	*Cone Assy. for Cabinet Models	36-3557	....

PRICES SUBJECT TO CHANGE WITHOUT NOTICE

©John F. Rider, Publisher

Model 655

Schematic Number	Part and Description	Part No.	List Price
①	Wave Band Switch	42-1153	$2.00
②	Wave Trap	38-6850	1.10
③	Ant. Transformer	32-1867	3.00
④	Compensater (Standard) (Ant.)	31-6058	.60
⑤	Compensater (Police) (Ant.)		
⑥	Compensater (Short-Wave) (Ant.)		
⑦	Condenser (.05 mf. Bakelite)	3615-SG†	.35
⑧	Condenser (.05 mf. Bakelite)	3615-SG†	.35
⑨	Condenser (50 mmf. Mica)	30-1029	.20
⑩	Det. Transformer	32-1868	3.00
⑪	Compensater (Standard) (Det.)	31-6063	.50
⑫	Compensater (Police) (Det.)		
⑬	Compensater (Short-Wave) (Det.)		
⑭	Resistor (51,000 ohm, ¼ watt)	33-351143	.20
⑮	Condenser (.00025 mf. Mica)	30-1032	.25
⑮a	Osc. Transformer	32-1976	1.75
⑯	Compensater (Standard) (Osc.)	31-6058	.60
⑰	Compensater (Police) (Osc.)		
⑱	Compensater (Short-Wave) (Osc.)		
⑲	Compensater (Std. Series) (Osc.)	31-6027	.70
⑲a	Condenser (.0025 Mica)	7006	.40
⑳	Compensater (Police Series) (Osc.)	31-6073	.50
㉑	Compensater (Short-Wave Series) (Osc.)	Part of ⑱	
㉒	Tuning Condenser	31-1555	4.50
㉓	Compensater (1st I.F. Pri.)	31-6053	.50
㉔	1st I.F. Transformer	32-1917	1.75
㉕	Compensater (1st I.F. Sec.)	Part of ㉔	
㉖	Resistor (1.0 meg., ¼ watt)	33-510143	.20
㉗	Resistor (51,000 ohm, ¼ watt)	33-351143	.20
㉘	Compensater (2nd I.F. Pri.)	31-6053	.50
㉙	2nd I.F. Transformer	32-1836	1.60
㉚	Compensater (2nd I.F. Sec.)	Part of ㉙	
㉛	Condenser (.00011 mf. Mica)	30-1030	.20
㉜	Condenser (.00011 mf. Twin Bakelite)	8035-DG†	.25
㉝	Resistor (330,000 ohm, ¼ watt)	33-433133	.20
㉞	Resistor (99,000 ohm, ¼ watt)	33-399143	.20
㉟	Condenser (.00011 mf.)	Part of ㉜	
㊱	Condenser (.05 mf. Tubular)	30-4020	.20
㊲	Condenser (50 mmf. mica)	30-1029	.20
㊳	Resistor (1.0 megohm, ⅛ watt)	33-510143	.20
㊴	Resistor (51,000 ohm, ⅛ watt)	33-351143	.20
㊵	Condenser (.01 mf.)	Part of ㊷	
㊶	Program Control	30-4378‡	.75
㊷	Volume Control	33-5108	1.45
㊸	Resistor (1.0 megohm, ⅛ watt)	33-510143	.20
㊹	Condenser (.03 mf. Tubular)	30-4025	.20
㊺	Condenser (.25 mf. Tubular)	30-4134	.35
㊻	Resistor (99,000 ohm, ⅛ watt)	33-399143	.20
㊼	Resistor (160,000 ohm, ⅛ watt)	33-416133	.20
㊽	Condenser (.05 mf. Bakelite)	3615-SU†	.35
㊾	Resistor (70,000 ohm, ⅛ watt)	33-370133	.20
㊿	Input Transformer	32-7114	3.00
(51)	Output Transformer	32-7078	1.25
(52)	Voice Coil & Cone Assy. (B.G. K-17)	*36-3159	.80
(53)	Field Coil Assy. (B G. K-17)	†36-3104	2.70
(54)	Electrolytic Condenser (3.0-1.0-2.0 mf.)	30-2122	1.85
(55)	B. C. Resistor (7750 ohm)	33-3211	.65
(56)	B. C. Resistor (10-10-100-130 ohm)	33-3226	.25
(57)	Electrolytic Condenser (8.0-10.0 mf.)	30-2045	1.80
(58)	Condenser (.3 mf. Bakelite)	6287-DU†	.40
(59)	Electrolytic Condenser (8.0 mf.)	30-2025*	1.35
(60)	Electrolytic Condenser (10 mf.)	Part of (59)	
(61)	Filter Choke	32-7115	1.80
(62)	Power Transformer (115 V., 60 cycle)	32-7402	4.50
(63)	Condenser (.015 Twin Bakelite)	3793-DG†	.40
(64)	Phono-motor switch assy.	6345	3.15
(65)	Phono-motor (115 V., 60 cycle)	35-1002	23.00
(66)	Resistor (39,000 ohm, 1 watt)	33-339443	.20
(67)	Electrolytic Condenser (1.0 mf.)	Part of (59)	
(68)	Resistor (15,000 ohm, ¼ watt)	33-315133	.20
(69)	Electrolytic Condenser (2.0 mf.)	Part of (59)	
(70)	Resistor (32,000 ohm, 2 watt)	33-332533	.30
(71)	Resistor (51,000 ohm, ½ watt)	33-351343	.20
(72)	Shadow Tuning Meter	45-2083	2.50
(73)	Pilot lamp (shadow meter)	34-2064	.09
(74)	Condenser (.05 mf. Tubular)	30-4020	.20
(75)	Pilot lamp (dial)	34-2039	.15
(76)	Phono-radio switch assy.	35-3014	1.30
(77)	Condenser (.05 mf. Tubular)	30-4020	.20
(78)	Condenser (.09 mf. Bakelite)	4989-SU†	.35

Schematic Number	Part and Description	Part No.	List Price
(79)	Resistor (5,000 ohm)	33-250125	.20
(80)	Resistor (15,000 ohm)	33-315133	.20
(81)	Pickup head	35-2014	7.25
	Pickup arm	35-2010	8.30
	Phono-motor (115 V., 50 cycle)	35-1007	23.00
	Phono-motor (115 V., 40 cycle)	35-1003	35.00
	Phono-motor (115 V., 25 cycle)	35-1008	35.00
	Phono-motor (230 V., 60 cycle)	35-1004	28.50
	Phono-motor (230 V., 50 cycle)	35-1009	....
	Phono-motor (230 V., 40 cycle)	35-1005	....
	Phono-motor (230 V., 25 cycle)	35-1006	....
	Hum Bucking coil	32-1940	1.10
	Radio-phono switch plate	28-2250	.10
	Switch Pointer	4277	.02
	Needle Cup	28-2222	.05
	Needle Cup Cover	28-2223	.05
	Speed Change lever	28-1648	.25
	Speed Change lever spring	28-1649	.05
	Speed Change lever spacer	28-6103	.03
	Speed Change lever washer	5577	.25C
	Turntable	35-3001	9.00
	Motor Board	25869	3.00
	Motor Board mtg. washer	27-4199	1.60C
	Motor Board mtg. washer	28-2089	.30C
	Motor Board mtg. washer	W-464-A	.55C
	Motor Board mtg. screw	W-461-B	.01
	Motor Board mtg. nut	W-149-A	.45C
	Motor Connector plug	4091	.30
	Shadow Meter light shield	28-2917	.02
	Glowing arrow screen	27-5159	.10
	Glowing arrow mask	27-5160	.20
	Scale guard	27-8140	.01
	Screen bracket	29-3061	.07
	Mask arm	29-3274	.03
	Coupling	29-3339	.06
	Link	29-3338	.03
	Shadow Screen	27-5120	1.50C
	Speaker Cable	02722	.30
	Knob (Phono-Radio)	03334	.10
	Knob (Tuning)	27-4206	.12
	Knob (Slow Speed Tuning)	27-4207	.10
	Knob (Volume Program Control)	27-4208	.10
	Knob (Wave Band)	27-4225	.10
	Socket (4-prong)	27-6044	.10
	Socket (6-prong)	27-6036	.11
	Socket (7-prong)	27-6037	.11
	Speaker Socket	27-6043	.08
	Tube Shield Body	28-2726	.10
	Tube Shield Base	28-2725	.03
	R. F. Shield	38-6921	.35
	I. F. Shield	38-6808	.25
	Wave Switch Nut	W-684-A	1.25C
	Power Transformer (115 V., 25 cycle)	32-7403	9.00
	Power Transformer (230 V., 50-60 cycle)	32-7404	7.50
	Electrolytic Condenser clamp	6440	.05
	Electrolytic Condenser insulator	27-7194	.01
	Chassis Mtg. screw	W-1496-A	1.60C
	Chassis Mtg. washer (rubber)	27-4201	1.40C
	Chassis Mtg. cushion (rubber)	27-4202	.03
	Chassis Mtg. sleeve	28-3101	.04
	Mask	28-3433	.25
	Bezel	28-3164	.50
	Bezel mtg. screw	W-1494	.30C
	Bezel glass	27-8113	.07
	Bezel glass gasket	27-8036	.01
	Dial scale	27-5165	.30
	Hub & set screw assy.	31-1724	.15
	Pilot lamp bracket assy.	38-6789	.50
	B.C. Resistor mtg. screw	W-888	1.00C
	B.C. Resistor mtg. nut	W-317-A	.40C
	B.C. Resistor spacer	3791	.45C
	Front Bumper	27-4200	3.75C
	Dial scale (inverted type code 123)	27-5183	.30
	Speaker Trans. Terminal cover	02824	.10
	Bottom shield	38-7189	.40
	Speaker mtg. bolt	29-3128	.02
	Speaker mtg. nut	W-124-A	.35C
	*Voice coil cone assy. (Furn. H-13)	02625	1.20
	†Field coil assy. (Furn. H-13)	02803	2.70

†Code 122—Use Type "O" (ODG, etc.) Prefix Condensers

*Code 122—30-2014 ‡Code 122—30-4379

PRICES SUBJECT TO CHANGE WITHOUT NOTICE

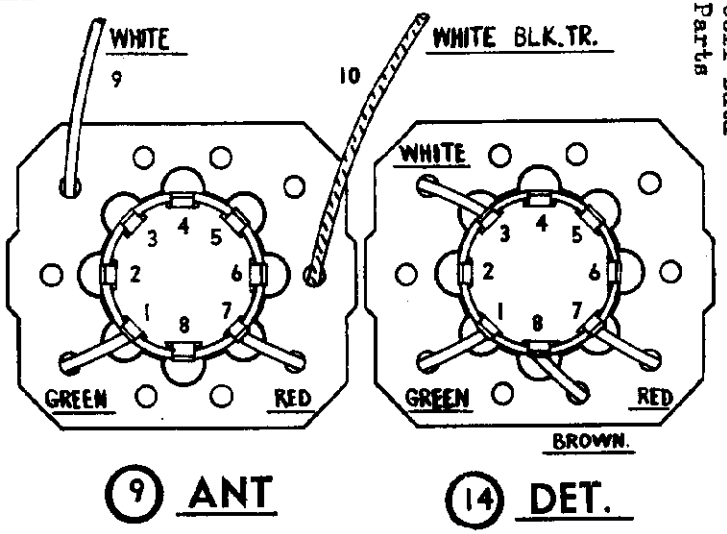

Fig. 1. R.F. Transformers

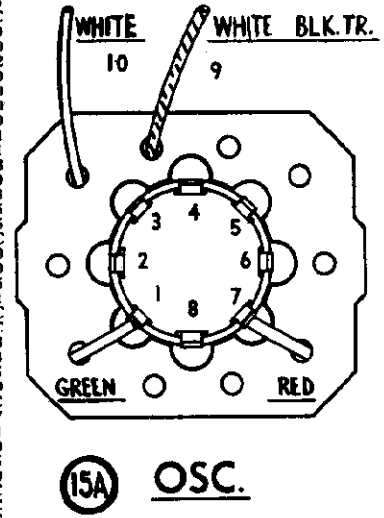

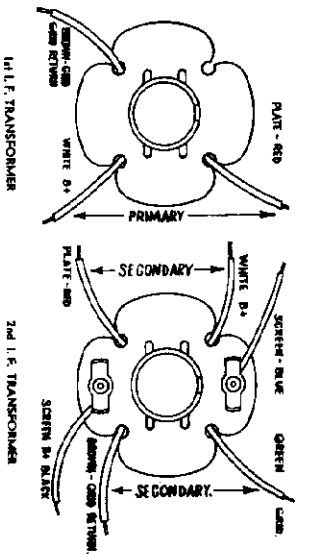

Fig. 2. I.F. Transformers

· PHILCO RADIO & TELEV. CORP.

MODEL 655
Schematic
Voltage

TUBE SOCKET VOLTAGES
(Measured from Tube Contact to Gnd.)

Fig. 3. Tubes as Viewed from Bottom

The voltages at the points indicated by the arrows above were obtained with a Philco type 025 Circuit Tester which contains a high resistance (1000 ohms per volt) voltmeter. Volume control at minimum, waveband switch at standard broadcast. K17 speaker.

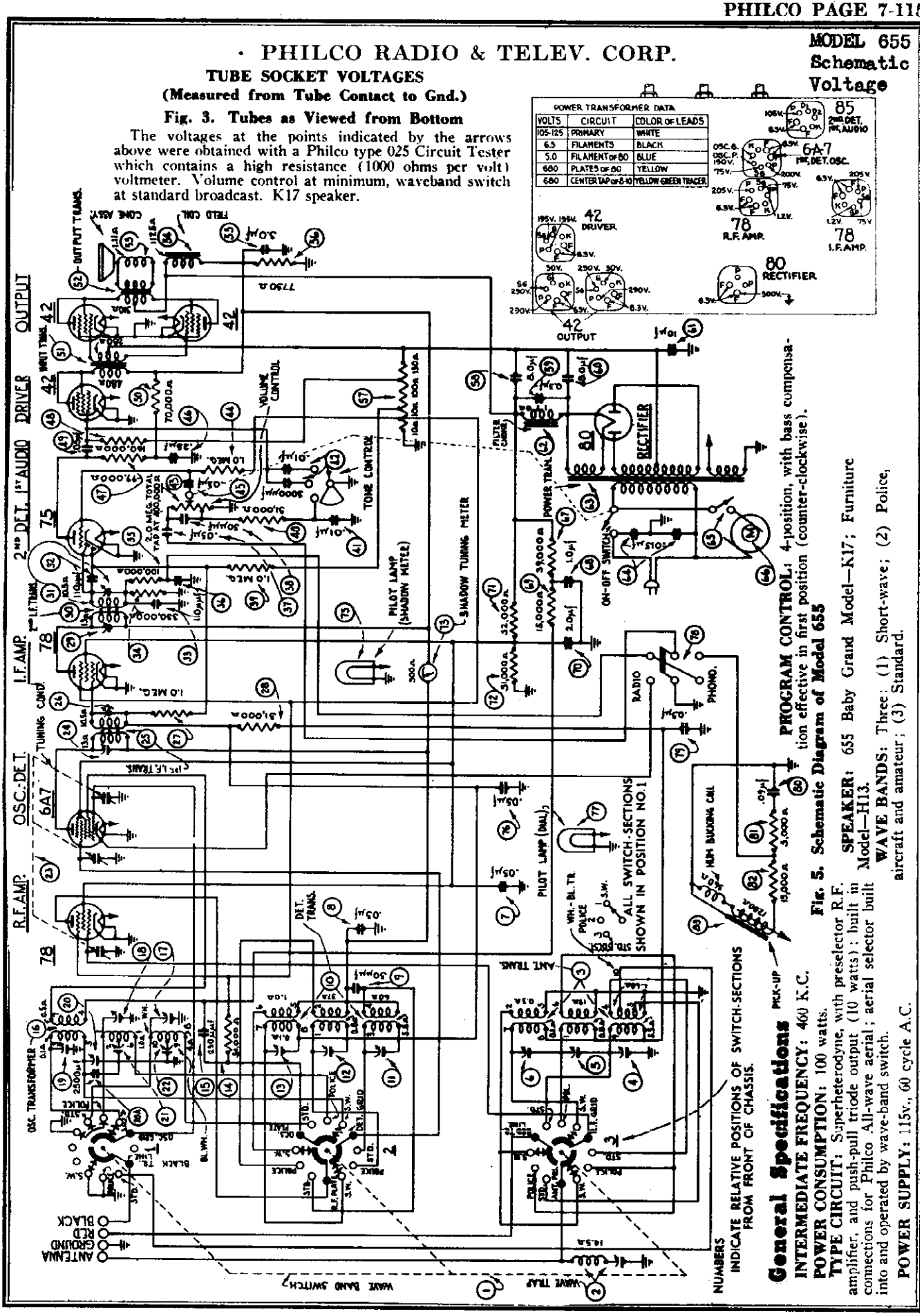

PROGRAM CONTROL: 4-position, with bass compensation effective in first position (counter-clockwise).

Fig. 5. Schematic Diagram of Model 655

SPEAKER: 655 Baby Grand Model—K17; Furniture Model—H13.

WAVE BANDS: Three: (1) Short-wave; (2) Police, aircraft and amateur; (3) Standard.

General Specifications

INTERMEDIATE FREQUENCY: 460 K.C.

POWER CONSUMPTION: 100 watts.

TYPE CIRCUIT: Superheterodyne, with preselector R.F. amplifier, and push-pull triode output (10 watts); built in connections for Philco All-wave aerial; aerial selector built into and operated by wave-band switch.

POWER SUPPLY: 115v., 60 cycle A.C.

NUMBERS INDICATE RELATIVE POSITIONS OF SWITCH-SECTIONS FROM FRONT OF CHASSIS.

©John F. Rider, Publisher

MODEL 655 Chassis, Alignment
Socket, Trimmers

PHILCO RADIO & TELEV. CORP.

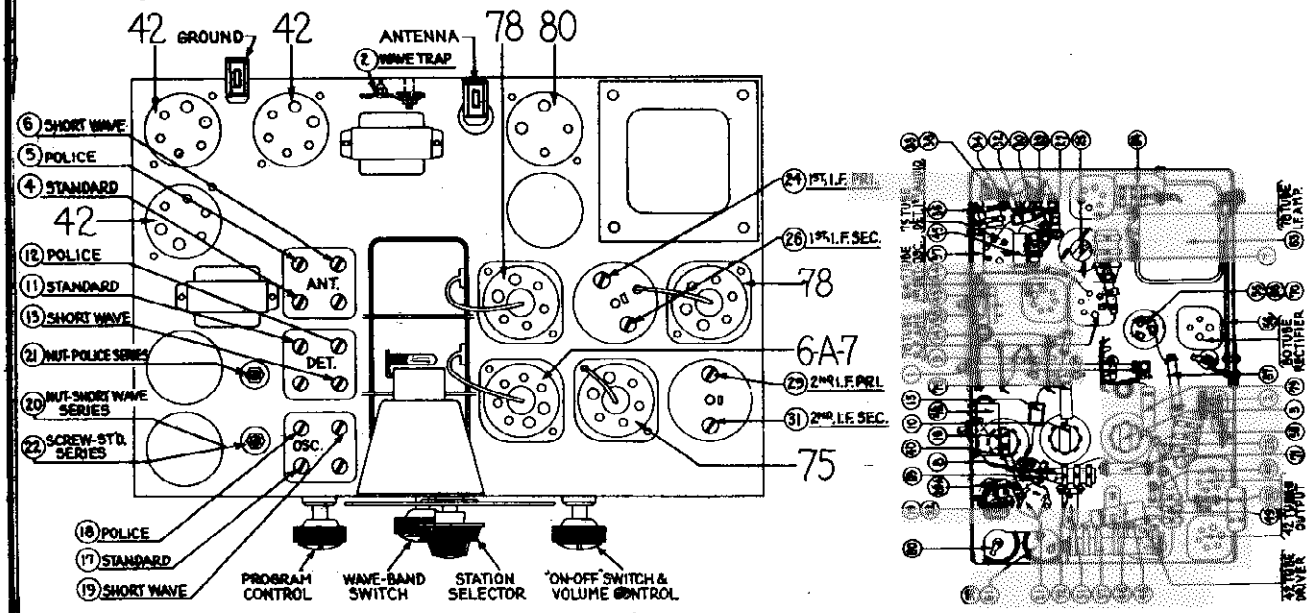

Fig. 4. Location of Compensating Condensers

Fig. 6. Base View

Adjusting Compensating Condensers

Adjustment of compensating condensers in Model 655 requires an accurate signal generator covering I.F., standard-wave, police and short-wave frequencies. The **PHILCO Model 088 All-Wave Signal Generator,** having a continuous range of from 100 to 20,000 K.C., is ideal for this purpose.

An output meter is also needed. **PHILCO Model 025 Circuit Tester** includes a high grade output meter.

Philco No. 3164 fibre wrench and No. 27-7059 fibre-handled screwdriver complete the equipment needed for making these adjustments. The locations of the various compensating condensers are shown in Fig. 4. Connect the output meter to the plate contacts of the type 42 output tubes (using the adapters provided with the "025") and set it at the 0-30 volt range.

INTERMEDIATE FREQUENCY: Set the signal generator at 460 K.C. with attenuator set at minimum, connect a .001 mf. condenser in series with its antenna lead and attach it to the grid cap of the 78 I.F. amplifier tube. Connect ground lead to ground terminal on set. Set the dial at 55 and turn the waveband switch to position 3 (extreme left). Adjust the volume control of set to almost maximum, and the 088 attenuator so that about one-fourth (¼) scale reading is had on the output meter. With a fibre screwdriver adjust condensers ㉙ and ㉛ (2nd I.F.) for maximum reading on output meter. Turn attenuator of signal generator to minimum and remove its antenna lead from the grid of the 78 I.F. tube; place it on the grid of the 6A7. Adjust 088 attenuator as before, then proceed to adjust condensers ㉔ and ㉖ (1st I.F.) for maximum output meter reading. Then remove the 088 oscillator lead. Care should be taken to keep the output meter reading during adjustments at about one-fourth scale reading. This should be done by using the 088 attenuator control.

WAVE TRAP: Connect the Signal Generator antenna and ground leads to the antenna and ground posts of the set. With the signal generator operating at 460 K.C. and the set controls adjusted as before for I.F. alignment, adjust wave trap ② until a minimum reading is obtained in the output meter.

SHORT WAVE: In adjusting the short wave or high frequency band, the det. compensator will have a tendency to "pull" or change the frequency of the oscillator. By shunting a padding or variable condenser (about .00025 Mf.) across the oscillator section of the gang (front section) and tuning it so that the second harmonic, instead of the fundamental, beats with the incoming signal, this "pull" can be minimized. The procedure for tuning this band is as follows:

Set the dial of the receiver at 18 megacycles (top scale) and the 088 dial at the same frequency. Turn wave band switch to position 1 (extreme right). Connect the shunt condenser to the oscillator section of the gang and tune it so that the second harmonic of the oscillator beats with the 18 M.C. signal from the 088. Next tune condensers ⑥ and ⑱ (antenna and det.) for maximum reading of the output meter. Disconnect shunt condenser and tune condenser ⑲ (osc.) for correct dial calibration. The set, oscillator frequency, when correctly adjusted, will be higher than that of the incoming signal. In order to check this it should be possible to pick up the 18 M.C. 088 oscillator signal as an image signal by increasing the 088 output and tuning the set to approximately 17.1 M.C.

For the low frequency adjustment of this band, turn the dial to 6.0 M.C., set the signal generator at 6.0 M.C. and adjust condenser ㉒ (nut) for maximum output meter reading. Readjust condenser ㉒ at 18.0 M.C.

POLICE: Turn wave band switch to position 2 (center), set signal generator at 5500 and dial of set at 5.5. Adjust condensers ⑮, ⑤ and ⑪ (osc., ant., and det.) for maximum output. Turn the set dial to 1.8 and the signal generator to 1800. Adjust condenser ㉑ (nut) (osc. series) for maximum output meter reading.

STANDARD WAVE: Turn waveband switch to position 3 (extreme left), set signal generator at 1500 and dial of set at 150. Now adjust the oscillator, antenna and det. "Standard" condensers. These are ⑬, ④ and ⑪ respectively.

Turn the dial to 60, set signal generator at 600 and adjust condenser ㉒ (oscillator standard series), (screw) for maximum output meter reading.

©John F. Rider, Publisher

PHILCO RADIO & TELEV. CORP.

MODEL 665
Schematic

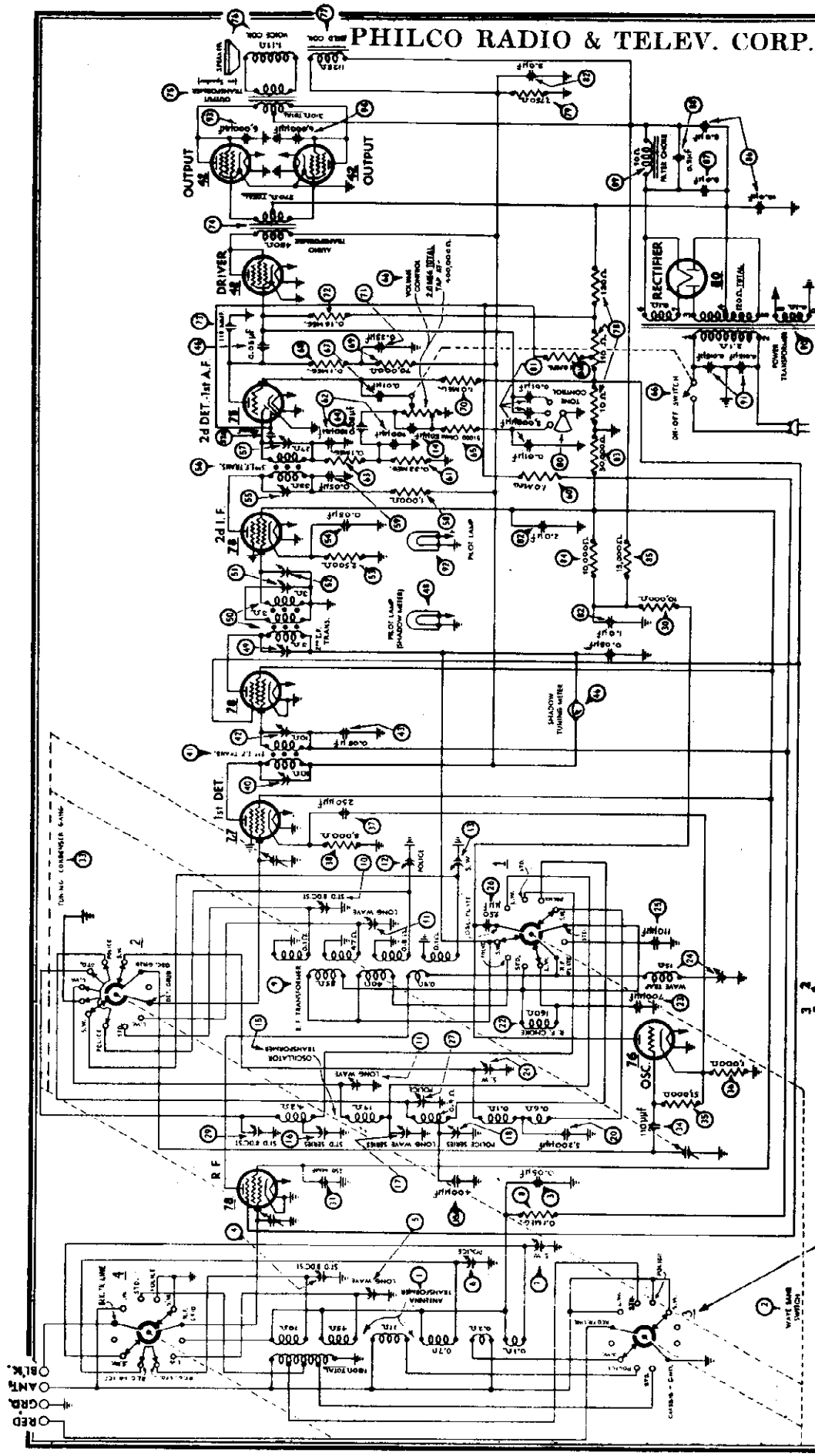

Fig. 3 — Schematic Diagram — Model 665

©John F. Rider, Publisher

MODEL 665
Socket,Voltage
Trimmers,Alignment

PHILCO RADIO & TELEV. CORP.

General Specifications

Type Circuit: Superheterodyne, with push-pull pentodes connected as triodes in output; output 10 watts; built in connections for Philco All-wave aerial; aerial selector built into and operated by wave-band switch.

Power Supply: Alternating Current. Voltage and frequency as specified on chassis nameplate.

Tubes Used: Ten (10) Total: 1 type 78 R.F., 1 type 77 1st detector, 1 type 76 oscillator, 2 type 78 I.F., 1 type 75 2nd detector 1st audio, 1 type 42 driver, 2 type 42 output, 1 type 80 rectifier.

Wave Bands: Four—(1) Shortwave; (2) Police and amateur; (3) Standard Broadcast; (4) Longwave (weather forecasts).

Frequency Ranges: Band (1)—5.7-18.0 Megacycles; Band (2)—1.75-5.8 Megacycles; Band (3)—540 to 1750 K.C.; Band (4)—150-390 K.C.

Program Control: 4 positions: (1) Mellow, (2) Brilliant, (3) Normal, (4) Noise reducing. Last two positions recommended for foreign short wave stations.

Tuning Meter: Shadow type tuning meter, mounted directly above scale.

Waveband Indicator: Glowing arrow on tuning scale shifts to proper scale when waveband switch is turned.

Automatic Volume Control: Fully effective on all stations.

Bass Compensation: Automatic: Effective on first two positions of program control, with volume control turned down.

Tuning Drive: Dual planetary, ball bearing. 80 to 1 ratio for slow-speed tuning, 10 to 1 on main knob.

Intermediate Frequency: 460 K.C.

Power Consumption: 90 watts.

Speaker: Type H-13.

Adjusting Compensating Condensers

Adjustment of compensating condensers in Model 665 requires an accurate signal generator covering long-wave, standard wave, police, and short-wave frequencies. The PHILCO Model 088 All-Wave Signal Generator, having a continuous range of from 100 to 20,000 K.C. (all fundamental frequencies) will be ideal for this purpose.

An output meter is also needed. PHILCO Model 025 Circuit Tester includes a high-grade output meter.

Philco No. 3164 fibre wrench and No. 27-7059 fibre handled screwdriver complete the equipment needed for making these adjustments. The locations of the various compensating condensers are shown in Fig. 2. Connect the output meter to the plate contacts of the output tubes (using the adapters provided with the "025") and set it at the 0-30 volt range.

I.F.—Set the Signal Generator at 460 K.C., and attach its antenna lead to the grid cap of the 77 1st detector tube (having removed the grid clip from the tube). Connect the ground terminal of the Signal Generator to the ground terminal of the set. Turn on the set, turn the waveband switch to standard broadcast (second position from left) and set dial at 60. Turn condenser ㊶ (2nd I.F. tertiary) all the way down before adjusting the other I.F. Compensators. Now with the fibre screwdriver, adjust condensers ㊲ and ㊳ (3rd I.F.), ㊴ and ㊵ (2nd I.F.), and then ㊷ and ㊸ (1st I.F.) until maximum reading is obtained in the output meter. Turn down the "attenuator" on the signal generator if the output meter needle goes off the scale. Now adjust condenser ㊶ (2nd I.F. tertiary) for maximum reading.

WAVE TRAP—Connect the Signal Generator antenna lead to the grid cap of the 78 R.F. tube. Replace the grid clip on the 77 tube cap. With the signal generator operating at 460 K.C. and the set controls adjusted as for I.F., adjust wavetrap ㉔ until the **minimum** reading is obtained in the output meter.

SHORTWAVE—Turn wave band switch to the shortwave position (extreme right). Set signal generator at 18 megacycles and dial of set at 18.0 (top scale). Now adjust the oscillator, Antenna, and R.F. shortwave compensators in turn, for maximum reading. These are ㉑, ⑭ and ⑦ respectively.

POLICE AND AMATEUR BAND—Turn the waveband switch to position 3 (from left). Set the dial and signal generator at 4.5 megacycles and adjust condensers ㉒, ⑬ and ⑥ respectively for maximum reading.

Set the signal generator at 1800 K.C. and turn the dial to 1.8. Adjust condenser ⑱ (nut), oscillator police series, to maximum reading.

STANDARD BROADCAST BAND—Turn the waveband switch to position 2 (from left). Set the dial and signal generator at 1500 K.C. and adjust condensers ⑳, ⑯ and ④ for maximum reading.

Set the dial and signal generator at 600 K.C. and adjust condenser ⑰ (screw), broadcast series, for maximum reading.

LONGWAVE BAND—Turn waveband switch to position 1 (left). Set the dial and signal generator at 340 K.C. and adjust condenser ⑳ (screw) to maximum. Then adjust ⑬ and ④ for maximum reading. Finally, set the dial and signal generator at 175 K.C. and adjust condenser ⑰ (nut) for maximum reading. This is the longwave series compensator.

Tube Socket and Power Transformer Voltages
Line Voltage 115

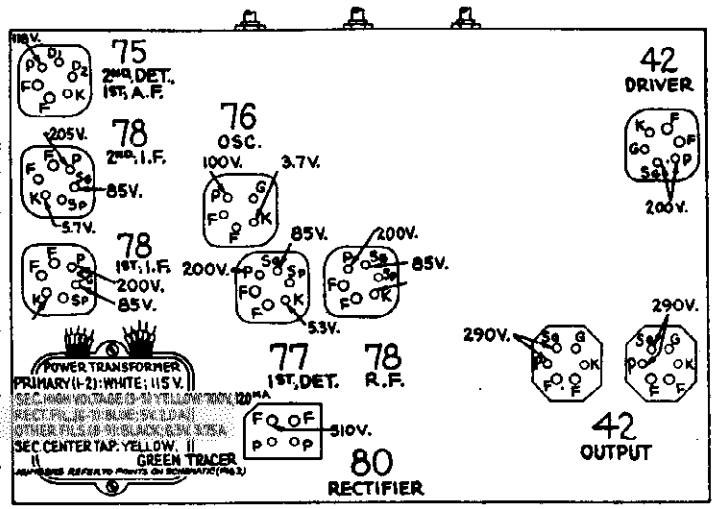

Fig. 1. Sockets as Viewed from Bottom

Socket voltages (measured to ground) obtained at points indicated by arrows. Above voltages were obtained by using a PHILCO type 025 Circuit Tester (or 048A All-purpose Tester), using test prods applied to sockets on underside of chassis. Volume control at minimum; dial at 60; waveband switch at standard broadcast (2d position from left). H-13 Speaker used.

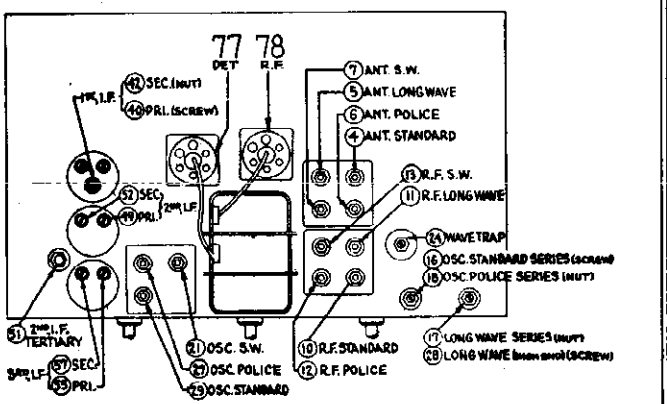

Fig. 2. Location of Compensating Condensers

PHILCO RADIO & TELEV. CORP.

MODEL 665
Chassis
Parts

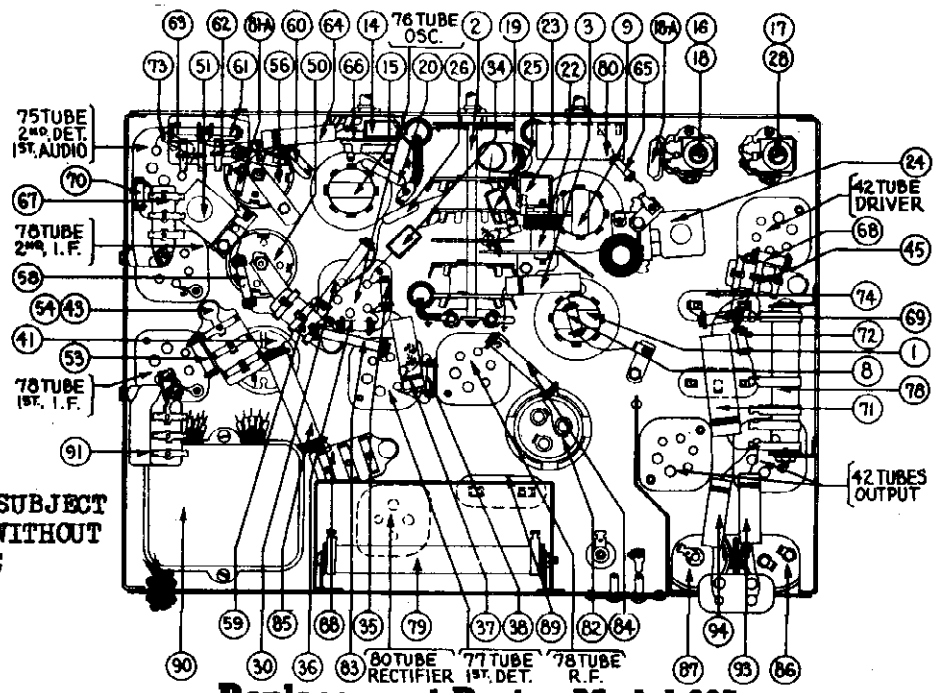

PRICES ARE SUBJECT TO CHANGE WITHOUT NOTICE

Replacement Parts—Model 665

①	Antenna Transformer	32-1750	$3.25
②	Waveband Switch	42-1120	2.50
③	Condenser (.05 Mfd. Tubular)	30-4020	.35
④	Compensater (Ant. Standard)	Part of ①	
⑤	Compensater (Ant. Longwave)	Part of ①	
⑥	Compensater (Ant. Police)	Part of ①	
⑦	Compensater (Ant. Shortwave)	Part of ①	
⑧	Resistor (99,000 ohm)(White, White, Orange)	33-399343	.20
⑨	R. F. Transformer	32-1751	3.00
⑩	Compensater (R. F. Standard)	Part of ⑨	
⑪	Compensater (R. F. Longwave)	Part of ⑨	
⑫	Compensater (R. F. Police)	Part of ⑨	
⑬	Compensater (R. F. Shortwave)	Part of ⑨	
⑭	Condenser (.00005 Mfd. Mica)	30-1029	.20
⑮	Oscillator Transformer	32-1752	2.25
⑯	Compensater (Standard Series)	Part of 31-6027	.70
⑰	Compensater (Longwave Series)	Part of 31-6054	.45
⑱a	Condenser (.0004 Mfd. Mica)	30-1000	.25
⑱	Compensater (Osc. Police Series)	Part of 31-6027	.70
⑲	Condenser (.1 Mfd. Tubular)	30-4170	.25
⑳	Condenser (.0052 Mfd. Mica)	30-1058	.55
㉑	Compensater (Osc. Shortwave)	Part of ⑲	
㉒	R. F. Choke	32-1745	.65
㉓	Condenser (.0007 Mfd. Mica)	5863	.25
㉔	Wave Trap	38-6850	1.10
㉕	Condenser (.00011 Mfd. Mica)	30-1031	.20
㉖	Condenser (.00025 Mfd. Mica)	30-1032	.25
㉗	Compensater (Osc. Police)	Part of ⑲	
㉘	Compensater (Longwave H. F. End)	Part of 31-6054	.45
㉙	Compensater (Osc. Standard)	Part of ⑲	
㉚	Resistor (10000 ohms) (Brown, Black, Orange)	33-310433	.20
㉛	Condenser (.00025 Mica)	30-1032	.25
㉜	Tuning Condenser Assembly	31-1609	5.50
㉝	Condenser (.00011 Mfd. Mica)	30-1031	.20
㉞	Resistor (51000 ohms)(Green, Brown, Orange)	33-351143	.20
㉟	Resistor (1000 ohms)(Brown, Black, Red)	33-210343	.20
㊱	Condenser (.00025 Mica)	30-1032	.25
㊲	Resistor (8000 ohms)(Gray, Black, Red)	33-280133	.20
㊳	Compensater (1st I. F. Primary)	Part of ㊴	
㊴	1st I. F. Transformer	*32-1642	2.00
㊵	Compensater (1st I. F. Secondary)	Part of ㊴	
㊶	Condenser (.05 Mfd. Bakelite Block)	+3615-DG	.40
㊷	Condenser (.05 Mfd. Bakelite Block)	+3615-SU	.35
㊸	Shadow Tuning Meter	45-2083	2.50
㊹	Pilot Lamp (Shadow Tuning Meter)	Part of ㊸	
㊺	Compensater (2nd I. F. Primary)	31-6067	.45
㊻	2nd I. F. Transformer	32-1865	1.00
㊼	Compensater (2nd I. F. Tertiary)	04000-R	.45
㊽	Compensater (2nd I. F. Secondary)	Part of ㊻	
㊾	Resistor (2500 ohms)(Red, Green, Red)	33-225333	.20
㊿	Condenser (.05 Mfd. Twin Bakelite Block)	Part of ㊸	
(51)	Compensater (3rd I. F. Primary)	Part of 31-6003	.45
(52)	Third I. F. Transformer	△32-1188	.65
(53)	Compensater (3rd I. F. Secondary)	Part of 31-6003	.45
(54)a	Condenser (.110 Mmf. Mica)	30-1031	.20
(54)	Resistor (1000 ohms)(Brown, Black, Red)	33-210633	.20
(55)	Condenser (.05 Mfd. Bakelite)	3615-SG	.35
(56)	Resistor (1.0 Meg. ¼ Watt)	33-510143	.20
(57)	Resistor (330000 ohms)(Orange, Orange, Yellow)	33-33133	.20
(58)	Condenser (.00011 Mfd. Twin Bakelite Block)	+8035-DG	.25
(59)	Resistor (99000 ohms)(White, White, Orange)	33-399143	.20
(60)	Condenser (.05 Mfd. Tubular)	30-4020	.20
(61)	Resistor (5000 ohms)(Green, Brown, Orange)	33-351143	.20
(62)	Volume Control & On-Off Switch	33-5110	$1.45
(63)	Condenser (.01 Mfd. Bakelite Block)	+3903-SU	.25
(64)	Resistor (99000 ohms)(White, White, Orange)	33-399143	.20
(65)	Resistor (70000 ohms)(Violet, Black, Orange)	33-370343	.20
(66)	Resistor (1 Meg.)(Brown, Black, Green)	33-510143	.20
(67)	Condenser (.25 Mfd. Tubular)	30-4134	.35
(68)	Resistor (160000 ohms)(Brown, Blue, Orange)	33-416133	.20
(69)	Condenser (.00011 Mfd. Mica)	30-1031	.20
(70)	Audio Transformer	32-7057	3.50
(71)	Output Transformer	32-7078	1.25
(72)	Cone & Voice Coil Assembly (H-13)	02625	1.20
(73)	Field Coil & Pot Assembly (H-13)	36-3104	2.70
(74)	Resistor (B. C., Wirewound)(10 ohms, 110 ohms, 130 ohms)	33-3226	.25
(75)	Resistor (Wirewound, 7750 ohms)	33-3020	.35
(76)	Tone Control	□30-4378	.75
(77)	Condensers in Tone Control	Part of (76)	
(77)a	Resistor (1.0 Meg. ¼ Watt)	33-510143	.20
(78)	Condenser (Electrolytic)(3 Mfd., 2 Mfd., 1 Mfd.)	30-2122	1.85
(79)	Resistor (30000 ohms)(Orange, Black, Orange)	33-330443	.20
(80)	Resistor (10000 ohms)(Brown, Black, Orange)	33-310433	.20
(81)	Resistor (13000 ohms)(Brown, Orange, Orange)	33-313633	.30
(82)	Condenser (Electrolytic, 8 Mfd., 10 Mfd.)	30-2045	1.80
(83)	Condenser (Electrolytic, 8 Mfd.)	○30-2025	1.35
(84)	Condenser (.3 Mfd. Bakelite Block)	+6287-DU	.40
(85)	Filter Choke	32-7056	2.20
(86)	Power Transformer 115 Volts 60 Cycles	32-7440	6.00
	115 Volts 25 Cycles	32-7441	8.75
	230 Volts 50 Cycles	32-7442	6.75
(87)	Condenser (.045 Mfd. Twin Bakelite Block)	+3793-DG	.40
(88)	Pilot Lamp (Dial)	34-2039	.15
(89)	Condenser (.006 Mfd. Tubular)	30-4024	.25
(90)	Condenser (.006 Mfd. Tubular)	30-4024	.25
	Dial Scale	27-5115	.40
	Dial Mask and Hub Assembly	31-1724	.15
	Dial Hub	28-7129	.10
	Dial Spring Clamp	28-2837	.10
	Socket—4-Prong	27-6042	.10
	Socket—5-Prong	27-6035	.11
	Socket—6-Prong	27-6036	.11
	Speaker Plug Socket	27-6033	.08
	Knob (Volume, Tone, Waveband)	27-4208	.10
	Knob (Station Selector)	27-4206	.12
	Knob (Slow Speed)	27-4207	.10
	Tube Shield (4 used)	28-2726	.10
	Tube Shield (2 used)	28-2755	.05
	Tube Shield Base	28-2725	.03
	A. C. Cord & Plug	L-943A	.60
	Bezel	28-3165	.50
	Bezel Glass	27-8011	.55
	Chassis Mtg. Bolt	W-1496A	1.60 per C
	Chassis Mtg. Washer (Rubber)	27-4201	1.40 per C
	Chassis Mtg. Bumper (Rubber)	27-4200	3.75 per C
	Mask	27-5136	.30
	Scale and Mask Guide	29-3272	.05
	R. F. Shield Assy.	38-6938	.35
	I. F. Shield Assy.	38-6872	.35
	Elec. Condenser Clamp	29-2460	.05
	Elec. Condenser Clamp	6440	.05
	Elec. Condenser Insulator	27-7194	.01
	Shadow Meter Light Shield	28-2917	.02
	Wave Switch Coupling	28-7150	.20
	Inverted Dial Scale	27-5123	.40

*Code 122: 32-1864 △Code 122: 32-1866 □Code 122: 30-4379 ○Code 122: 30-2014

+ The letter O should be added to parts (62), (63), (75), (76), (78), (84), (87), for Code 122. Example (3615-DG = 3615-ODG).

©John F. Rider, Publisher

MODEL 680
Chassis

PHILCO RADIO & TELEV. CORP.

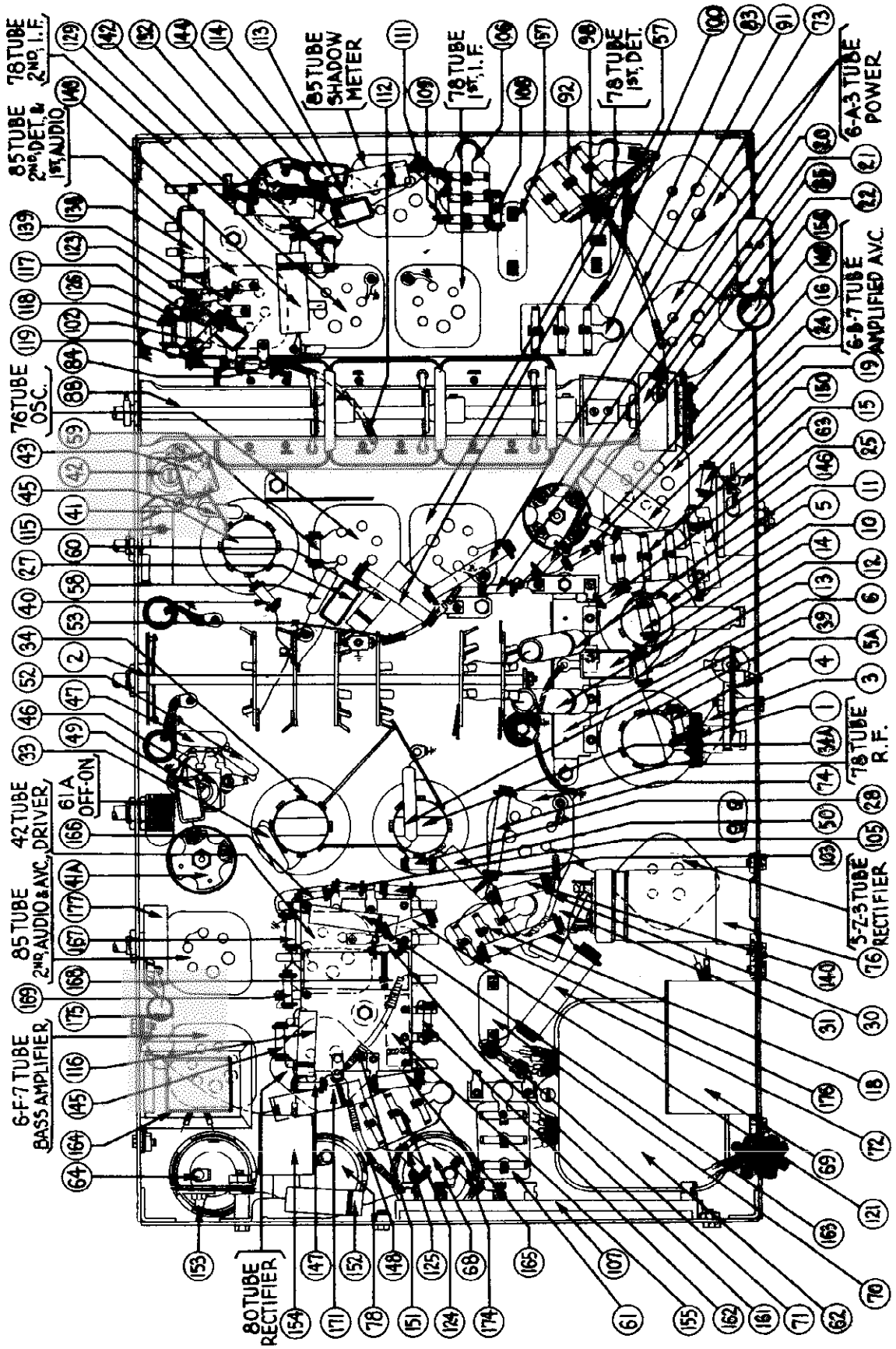

Fig. 3. Bottom View of Chassis

PHILCO RADIO & TELEV. CORP.

WAVE BANDS: Four: (1) short wave; (2) amateur and police; (3) standard; (4) long wave (weather).
FREQUENCY RANGES: Band (1), 7.2-22 mc.; Band (2), 2.3-7 mc.; Band (3), 550-1700 K.C.; Band (4), 150-400 K.C.
INTERMEDIATE FREQUENCY: 460 K.C.

General Specifications:

TYPE CIRCUIT: Superheterodyne, with push pull Class "A" Triodes as power tubes. Variable selectivity accomplished by varying the coupling in the I.F. Stages. Manual controlled bias amplifier, amplified automatic volume control, built-in connections for all-wave aerial; aerial selector built into and operated by wave band switch. Separate bias voltage supply for audio stages.

©John F. Rider, Publisher

MODEL 680
Socket, Voltage Alignment

PHILCO RADIO & TELEV. CORP.

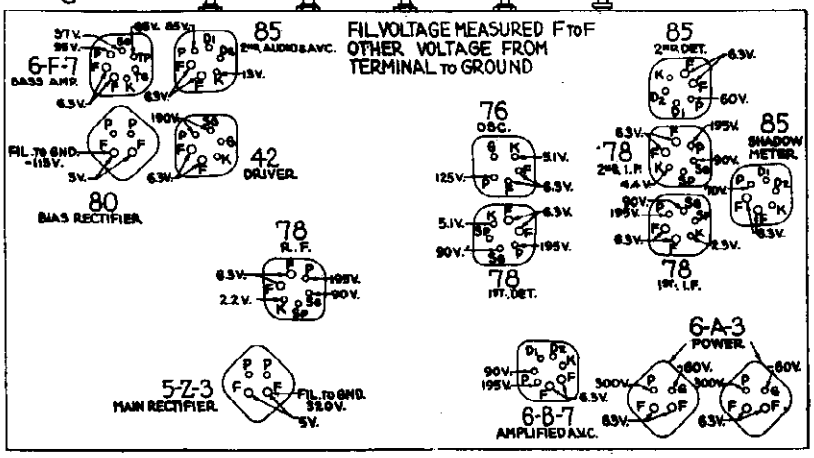

POWER SUPPLY: Alternating current, voltage and frequency as specified on name plate.

WAVE BAND INDICATOR: Glowing arrow on tuning scale shifts to proper scale when waveband switch is turned.

TUNING METER: Shadow type tuning meter mounted directly above scale and operated by a separate tube.

AUDIO OUTPUT: 20 watts undistorted output.

TUNING DRIVE: Dual Planetary, ball-bearing, 80 to 1 ratio for slow speed tuning. 10 to 1 normal.

POWER CONSUMPTION: 142 watts.

SPEAKER: U-10.

FIG. 1. Sockets Viewed from Bottom—Voltage Measurements to Ground, Unless Otherwise Shown—Line Voltage 115

Adjusting Compensating Condensers

Adjustment of compensating condensers in Model 680 requires an accurate signal generator covering long-wave, standard wave, police, and short-wave frequencies. The **PHILCO Model 088 All-Wave Signal Generator,** having a continuous range of from 100 to 20,000 K.C. (all fundamental frequencies) will be ideal for this purpose.

An output meter is also needed. **PHILCO Model 025 Circuit Tester** includes a high-grade output meter.

PHILCO No. 3164 Fibre Wrench and **No. 27-7059 Fibre Handled Screwdriver** complete the equipment needed for making these adjustments. The locations of the various compensating condensers are shown in Fig. 2. Connect the output meter to the plate contacts of the output tubes (using the adapters provided with the "025") and set it at the 0-30 volt range.

Under no conditions attempt to adjust this receiver without these instruments.

Before attempting to adjust the I.F. stages, turn the condenser gang all the way in. The glowing arrow should then be between the two vertical lines at the extreme left of the low frequency calibrations. The Bass Control should be turned off (turn to left). The fidelity control in selective position (turn to left). Adjust the hum control (back of set) for minimum hum.

Attach the signal generator antenna lead to the grid of the 2nd I.F. 78 tube, and the ground lead to the ground post on set. Adjust the volume control of set to maximum (turn to right), tune the signal generator to 460 K.C., and adjust the attenuator of the signal generator for approximately ¼ scale output meter reading.

Turn condenser (12) (shadow meter compensator) approximately four turns to the left. Adjust condensers (10), (13), and (11) for maximum output meter reading. Adjust condenser (12) for minimum output meter reading.

Remove the signal generator antenna lead from the grid of the 2nd I.F., 78 tube and place it on the grid of the 1st I.F., 78 tube, again adjust the signal generator attenuator for approximately ¼ scale output meter reading and adjust condensers (8) and (9) for maximum output meter reading.

Remove the signal generator antenna lead from the grid of the 1st I.F., 78 tube and place it on the grid of the 1st detector, 78 tube. Regulate the signal generator attenuator as before for ¼ scale output meter reading. Adjust condensers (5) and (7) for maximum output meter reading.

Turn down the volume control of set and advance the signal generator attenuator until the shadow meter width decreases approximately fifty percent. Adjust condenser (12) for minimum shadow meter width.

Remove the signal generator antenna lead from the grid of 1st detector, 78 tube and couple it to the aerial post on the set through a 125 mmf. condenser. Turn the volume control of the set back to maximum (to right) and adjust the signal generator attenuator for approximately ½ scale output meter reading. Adjust the wave trap (condenser (1)) for minimum output meter reading.

Reconnect the signal generator antenna lead to the grid of the first detector 78 tube and adjust the signal generator attenuator for approximately ¼ scale output meter reading.

If the fidelity selectivity control is turned to the extreme right hand position, it will be found, upon varying the frequency of the signal generator, that two definite peaks will appear in the output meter reading—one at 452 K.C. and another at 468 K.C. These peaks in the output meter reading indicate peaks in the tuning curve. The amplitude of these peaks should be equal; that is, the same output meter reading should be obtained at both 452 K.C. and 468 K.C. Any variations in these two readings can be corrected by a slight readjustment of the shadow meter I.F. primary padder (13). If the peak at 452 K.C. is higher than the one at 468 K.C., the primary padder will have to be turned out. If the reverse is true, the capacity of this padder must be increased. In any case, the voltmeter readings must be made equal by dividing the differences through readjustment.

R. F. and Oscillator Adjustments

SHORT WAVE

Turn the fidelity control back to the extreme left and the wave band switch to the extreme right (band 1). Connect the signal generator antenna lead to the aerial post on set through a two-meg resistor. Tune the set and signal generator to 18 mc. Turn the signal generator attenuator to maximum and adjust the volume control of set for ¼ scale reading on the output meter. Adjust condenser (6) for maximum output meter reading. Turn the dial of the set to approximately 17.1 mc. and check the image frequency.

Turn the dial of the set back to 18 mc. and connect a variable condenser (approximately 250 mmf.) across the oscillator section of the gang (2nd from front of chassis). Turn the variable shunt condenser in until the 18 mc. signal gives a reading on the output meter. Adjust condensers (2) and (3) for maximum output meter reading.

Removing the shunt condenser, turn the dial of the set and signal generator to 8 mc. and adjust condenser (4) for maximum output meter reading. Readjust condenser (3) with the set and signal generator tuned to 18 mc.

POLICE

Turn the wave band switch to position 2 and tune the set and signal generator to 6 mc. Adjust condensers (2), (6) and (3) for maximum output meter reading.

Turn the dial of the set and signal generator to 2.4 mc. and adjust condenser (4) for maximum output meter reading. Turn the dial of the set and signal generator back to 6 mc. and readjust condenser (3).

STANDARD

Turn the wave band switch to position 3 and tune the set and signal generator to 1500 K.C. and adjust condensers (7), (8), (3) and (5) for maximum output meter reading.

Turn the dial of the set and signal generator to 580 K.C., and remove the two meg. resistor from the antenna lead. Turn the volume control to maximum and adjust the signal generator attenuator for approximately ¼ scale output meter reading. Adjust condenser (6) for maximum output meter reading.

WEATHER

Turn the wave band switch to position 4, and tune the set and signal generator to 340 K.C. Adjust condensers (1), (3) and (5) for maximum output meter reading.

Turn the dial of the set and signal generator to 175 K.C. and adjust condenser (4) for maximum output meter reading. Readjust condenser (5) at 340 K.C.

Turn the wave band switch back to position (3) and tune the set and signal generator to 580 K.C. Adjust condenser (6) for maximum output meter reading. Tune the set and signal generator to 1500 K.C. and adjust condenser (3) for maximum output meter reading. Turn down (to left) the volume control and turn up (to right) the signal generator attenuator. Then adjust condenser (3) for maximum output meter reading.

Adjustment of 10 K. C. Filter

The 10 K.C. filter in the audio circuit will rarely require readjustment. As the proper adjustment of this padder ((13) on diagram) requires an accurately calibrated audio oscillator, it should be reset only in the event that it has been tampered with or in cases where it has become necessary to replace one of the elements of this filter.

Instructions covering an emergency adjustment of this filter can be obtained from your Philco distributor.

©John F. Rider, Publisher

PHILCO RADIO & TELEV. CORP.

MODEL 680
Trimmers
Parts List

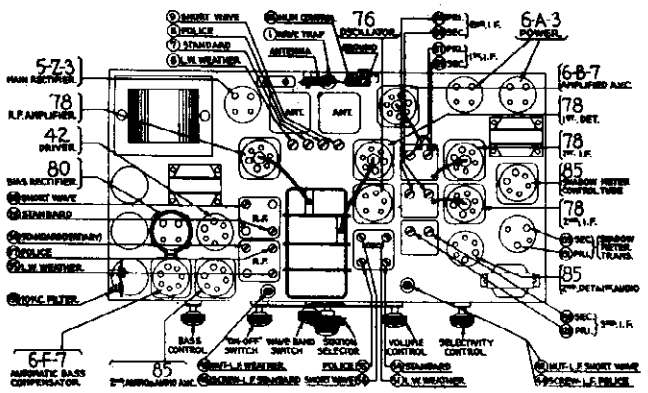

FIG. 2. Location of Compensating Condensers

TUBES USED: Fifteen (15) total: 1 type 78 R.F., 1 type 76 osc., 1 type 78, 1st det. and mixer, 2 type 78 I.F., 1 type 85, 2nd det. and 1st audio, 1 type 85, 2nd audio and audio A.V.C., 1 type 42 driver, 2 type 6A3 output, 1 type 6B7 amplified A.V.C., 1 type 6F7 automatic bass compensation, and bass amplifier, 1 type 85 shadow meter control, 1 type 80 fixed bias rectifier, 1 type 5Z3 main rectifier.

Replacement Parts for Model 680

Schematic No.	Part and Description	Part No.	List Price
①	Wave Trap	38-6850	$1.10
②	Wave Band Switch	42-1127	2.85
③	Condenser (0.015 mf.)	39-4358	.20
④	Resistor (5,000 ohms)	6096	.20
⑤	Antenna Transformer (Bdcst. 3 and 4)	32-1811	1.75
⑤a	Antenna Transformer (Bdcst. 1 and 2)	32-1812	1.10
⑥	Padder (Antenna Band 4)		
⑦	Padder (Antenna Band 3)		
⑧	Padder (Antenna Band 2)	31-6047	.50
⑨	Padder (Antenna Band 1)		
⑩	Resistor (51,000 ohms)	6098	.20
⑪	Condenser (6,000 mmf.)	30-4125	.20
⑫	Condenser (6,000 mmf.)	30-4125	.20
⑬	Resistor (51,000 ohms)	6098	.20
⑭	Condenser (4,700 mmf.)	30-1052	.55
⑮	Condenser (0.1 mf.)	4989-ODG	.40
⑯	Resistor (1.0 meg.)	33-1096	.20
⑰	Condenser Gang	31-1619	7.00
⑱	Condenser (0.05 mf.)	3615-ODG	.40
⑲	Condenser (1,000 mmf.)	30-4201	.20
⑳	I.F. Transformer (AVC)	32-1837	.70
㉑	Resistor (0.25 meg.)	6097	.20
㉒	Resistor (0.25 meg.)	6097	.20
㉓	Condenser (0.1 mf.)	Part of ⑮	....
㉔	Resistor (1.0 meg.)	33-1096	.20
㉕	Resistor (51,000 ohms)	6098	.20
㉖	Padder (R.F. Std.)	Part of ㉘a	....
㉗	Condenser (250 mmf.)	30-1032	.25
㉘	Resistor (51,000 ohms)	6098	.20
㉙	Condenser (0.05 mf.)	Part of ⑱	....
㉚	Resistor (400 ohms)	33-3016	.20
㉛	Condenser (0.1 mf.)	30-4122	.20
㉜	Transformer	Part of ㉘a	....
㉝	Condenser (410 mmf.)	30-1000	.20
㉞	Detector Transformer (Bdcst. 4 and 2)	32-1813	2.60
㉞a	Detector Transformer (Bdcst. 1 and 3)	32-1814	2.10
㉟	Padder (Det., Weather)		
㊱	Padder (Det., Tertiary)	31-6058	.60
㊲	Padder (Det., Police)		
㊳	Padder (Part of ㉘a)	61-6059	.50
㊴	Condenser (4,700 mmf.)	30-1052	.55
㊵	Resistor (70 ohms)	33-1129	.20
㊶	Oscillator Transformer (Bdcst. 1, 2 and 3)	32-1815	2.50
㊶a	Oscillator Transformer (Bdcst. 1)	32-1816	.30
㊷	Padder (S.W. Series)	31-6027	.70
㊸	Condenser (1,000 mmf.)	30-1063	.30
㊹	Padder (Police Series)	Part of ㊷	....
㊺	Condenser (900 mmf.)	30-1060	.25
㊻	Padder (Standard)	31-6033	.50
㊼	Condenser (250 mmf.)	30-1032	.25
㊽	Padder (Weather Srs.)	Part of ㊷	....
㊾	Condenser (410 mmf.)	30-1000	.25
㊿	Condenser (0.015 mf.)	30-4358	.20
(51)	Padder (Osc. Weather)	Part of ㉘a	....
(52)	Condenser (15 mmf.)	30-1030	.20
(53)	Resistor (700 ohms)	33-3124	.25
(54)	Padder (Osc. Standard)		
(55)	Padder (Osc. Police)	31-6057	.70
(56)	Padder (Osc. Short Wave)		
(57)	Resistor (10,000 ohms)	3524	.20
(58)	Condenser (50 mmf.)	4587	.20
(59)	Resistor (100,000 ohms)	6099	.20
(60)	Condenser (0.015 mf.)	30-4358	.20
(61)	Condenser (0.015-0.015 mf.)	3793-ODG	.40
(62)	Power Transformer	32-7455	8.00
(63)	Potentiometer (Hum Adj.)	33-5111	.70
(64)	Condenser (50.0 mf.)	30-2128X	1.80
(65)	Resistor (9,800 ohms)		
(66)	Resistor (2,600 ohms)	33-3216	.60
(67)	Resistor (800 ohms)		
(68)	Condenser (8.0 mf.) double	30-2028M	2.15
(69)	Condenser (0.6 mf.)	30-4384	.50
(70)	Choke (Filter)	32-7056	2.20
(71)	Off-On Switch	42-1129	.50
(72)	Resistor (10,000 ohms)	33-1024	.35
(73)	Resistor (10,000 ohms)	3524	.20
(74)	Resistor (25,000 ohms)	3656	.20
(75)	Condenser (8.0 mf.)	Part of (68)	....
(76)	Condenser (2.0, 2.0, 1.0, 1.0 mf.)	30-2130	2.15
(77)	Condenser (4.0 mf.)	30-2129	1.65
(78)	Condenser (8.0 mf.)	Part of (72)	....
(79)	Resistor (2.0 meg.)	33-1025	.20
(80)	Condenser (110 mmf.)	30-1031	.20
(81)	Pilot Lamp (Shadowmeter)	6608	.09
(82)	Pilot Lamp (Dial Scale)	34-2039	.15
(83)	Condenser (0.1 mf.)	4989-ODG	.40
(84)	Resistor (1.0 meg.)	33-1096	.20
(85)	Potentiometer (2300 ohms)	33-5124	1.00
(86)	Condenser (130 mmf.)	30-1036	.20
(87)	Padder (Primary)	31-6055	.50
(88)	1st I.F. Transformer Part of I.F. Unit (89a)		....
(89a)	I.F. Expander Unit	38-7013	15.00
(89)	Padder (Secondary)	Part of (87)	....
(90)	Condenser (130 mmf.)	30-1036	.20
(91)	Resistor (400 ohms)	33-3016	.20
(92)	Condenser (0.1 mf.)	4989-ODG	.40
(93)	Condenser (130 mmf.)	30-1036	.20
(94)	Padder (Primary)	31-6055	.50
(95)	2nd I.F. Transformer Part of I.F. Unit (89a)		....
(96)	Padder (Secondary)	Part of (94)	....
(97)	Condenser (130 mmf.)	30-1036	.20
(98)	Resistor (400 ohms)	33-3016	.20
(99)	Condenser (0.1 mf.)	Part of (92)	....
(100)	Resistor (400 ohms)	33-3016	.20
(101)	Condenser (0.01 mf.)	Part of (93)	....
(102)	Resistor (1.0 meg.)	33-1096	.20
(103)	Resistor (70,000 ohms)	33-1115	.20
(104)	Condenser (2.0 mf.)	Part of (74)	....
(105)	Resistor (99,000 ohms)	6099	.20
(106)	Condenser (0.03 mf.)	8318-OSG	.35
(107)	Resistor (3,200 ohms)	33-3215	.70
(108)	Resistor (1.0 meg.)	33-1096	.20
(109)	Resistor (1.5 meg.)	33-1188	.20
(110)	Condenser (0.03 mf.)	Part of (106)	....
(111)	Resistor (2.0 meg.)	33-1025	.20
(112)	Resistor (1,000 ohms)	33-3017	.20
(113)	Condenser (0.02 mf.)	30-4113	.20
(114)	Condenser (110 mmf.)	30-1031	.20
(115)	Volume Control (0.5 meg.)	33-5117	1.00
(116)	Condenser (0.02 mf.)	30-4215S	.20
(117)	Condenser (0.05 mf.)	30-4020P	.20
(118)	Resistor (99,000 ohms)	6099	.20
(119)	Resistor (99,000 ohms)	6099	.20
(120)	Shadow Meter	45-2088	2.50
(121)	Resistor (6,000 ohms)	7352	.20
(122)	Resistor (2,400 ohms)	Part of (107)	....
(123)	Condenser (110 mmf.)	30-1031	.20
(124)	Condenser (0.15 mf.)	6287-ODG	.40
(125)	Resistor (490,000 ohms)	6097	.20
(126)	Condenser (110 mmf.)	30-1031	.20
(127)	Condenser (130 mmf.)	30-1036	.20
(128)	Padder (Primary)	31-6055	.50
(129)	Condenser (0.01 mf.)	30-4124P	.25
(130)	Condenser (130 mmf.)	30-1036	.20
(131)	Padder (Primary)	31-6055	.50
(132)	I.F. Transformer (Shadow Meter)	32-1838	.90
(133)	Padder (Secondary)	Part of (132)	....
(134)	Condenser (130 mmf.)	30-1036	.20
(135)	3d I. F. Transformer Part of I.F. Unit (89a)		....
(136)	Padder (Secondary)	Part of (135)	....
(137)	Condenser (130 mmf.)	30-1036	.20
(138)	Condenser (0.05 mf.)	30-4020M	.20
(139)	Resistor (1.0 meg.)	33-1096	.20
(140)	Resistor (50,000 ohms)	4518	.20
(141)	Condenser (1.0 mf.)	Part of (74)	....
(142)	Resistor (25,000 ohms)	33-1013	.20
(143)	Condenser (0.05 mf.)	30-4020M	.20
(144)	Condenser (110 mf.)	30-1031	.20
(145)	Resistor (99,000 ohms)	6099	.20
(146)	Condenser (1,000 mmf.)	30-1063	.30
(147)	Resistor (0.5 meg.)	6097	.20
(148)	Resistor (100 ohms)	33-3187	.20
(149)	Switch....Part of (89a) I.F. Exp. Unit		....
(150)	Resistor (4.0 meg.)	33-1002	.20
(151)	Resistor (300 ohms)	33-3121	.25
(152)	Condenser (1,000 mmf.)	30-1063	.30
(153)	Padder	04000-T	.35
(154)	Transformer (10KC Filter)	32-7368	.60
(155)	Condenser (0.02 mf.)	30-4215S	.20
(156)	Condenser (0.01 mf.)	30-4051P	.25
(157)	Input Transformer	32-7446	1.75
(158)	Output Transformer	32-7461	2.00
(159)	Fuse	45-2113	.16
(160)	Speaker Cone Assembly	36-3381	1.75
(161)	Field Coil Assembly	36-3162	8.00
(162)	Resistor (99,000 ohms)	6099	.20
(163)	Resistor (0.5 meg.)	6097	.20
(164)	Condenser (0.02 mf.)	6097	.20
(165)	Choke	32-7476	1.25
(166)	Resistor (20,000 ohms)	6650	.20
(167)	Resistor (0.5 meg.)	6097	.20
(168)	Resistor (1.0 meg.)	33-1096	.20
(169)	Condenser (0.25 mf.)	6097	.20
(170)	Resistor (0.5 meg.)	6097	.20
(171)	Choke (Bass)	32-7478	1.50
(172)	Condenser (0.06 mf.)	30-4373	.20
(173)	Condenser (1.0 mf.)	Part of (74)	....
(174)	Condenser (0.15 mf.)	Part of (129)	....
(175)	Resistor (0.5 meg.)	6097	.20
(176)	Condenser (0.02 mf.)	30-4113X	.20
(177)	Resistor (15,000 ohms)	5278	.20
(178)	Potentiometer (1.0 meg.)	33-5118	.70
(179)	Resistor (70,000 ohms)	33-1182	.20
	Dial Mask Assembly	31-1575	.40
	Dial Mask Bearing	28-6307	.05
	Dial Mask Bearing Nut	28-6308	.10
	Cord Take-up Slide	28-7134	.10
	Mask Drive Cord	31-1580	.05
	Drive Cord Spring	28-8386	.01
	Dial Scale	27-5127	.40
	R.F. Shield Assembly	38-6938	.35
	R.F. Shield Assembly	38-6793	.35
	I.F. Shield Assembly	38-6986	.20
	Coil Shield (Oscillator-Long-Wave)	5840	.10
	5-Prong Socket	27-6035	.11
	6-Prong Socket	27-6036	.11
	7-Prong Socket	27-6037	.11
	4-Prong Socket	27-6044	.10
	Speaker Socket	27-6043	.08
	Tube Shield Body	28-2726	.10
	Tube Shield Base	28-2725	.03
	Knob (Station Selector)	27-4206	.12
	Knob (Slow Tuning)	27-4207	.10
	Knob (Off-On, Fidelity, Volume, Bass)	27-4225	.10
	Bezel	28-3165	.50
	Bezel Gasket	27-7982	.90C
	Bezel Glass	27-7890	.60
	Acoustic Compensator	36-1155	1.25
	Speaker Cable	02722	.30
	Shadow Screen	27-5120	1.50C
	Mounting Foot	29-2957	.06
	Wave Switch Shaft (Coupling)	28-7121	1.80C
	Bottom Shield Assembly	38-7042	.60
	Mounting Clamp (Electrolytic Condenser)	6440	.05
	Insulator	27-7194	.01
	Fahnestock Clip (Antenna and Ground)	L-1126	1.25C

PRICES ARE SUBJECT TO CHANGE WITHOUT NOTICE

©John F. Rider, Publisher

MODELS 811PA, 811PB, 811PV

PHILCO RADIO & TELEV. CORP.

MODEL 811PV Alignment

Notes

The coil windings terminate in leads instead of terminals or lugs. The color scheme of the leads is given in Figure 1.

FIGURE 1

If replacements are ever necessary, replace the entire coil assembly, 32-2160 for the first I. F. stage and 32-2164 for the second I. F. stage. Neither the coil nor the padders will be furnished separately. Order only by the above numbers.

POLICE AUTO RADIO — MODELS 811PA, 811PB AND 811PV

There are two new types of Philco police auto radio Receivers, each designed to meet the special requirements of this particularly rigorous service. The Model 811PV, a variable tuning Police Receiver — and the Model 811P, a crystal controlled, fixed frequency Receiver, the DeLuxe Police Auto Radio.

HOUSING, PLATING, FINISH Both are single unit Receivers, housed in containers, 10¾ inches long by 7⅛ inches wide by 5-15/16 inches deep. The chassis, housing and covers are all steel and are plated to prevent rusting. They are given an exterior black wrinkle finish.

MOUNTING BRACKETS Hanger brackets riveted to the Receiver, hook on to a dash bracket which is permanently installed in the car, while a single bolt at the bottom fastens the Receiver securely to the dash. This makes the installation and removal of the Receiver a simple, rapid operation.

CONTROL SHAFTS, CONNECTIONS The volume control and (in case of 811PV) the tuning control couplers, the "A" battery and the antenna connectors are located on one end of the housing. The shafts are the rapid coupling type with the locking gland nut at the Receiver end. The "A" battery and antenna connections are quick detachable bayonet locking type, with the "A" fuse placed in the "A" lead.

CONDENSER MOUNTING The tuning condenser is mounted on live rubber. This prevents microphonic trouble from developing in the condenser and is a patented Philco feature.

CONDENSER DRIVE The condenser drive gear ratio (Model 811PV) is 18:1. This eliminates practically all back lash and due to the mechanism used, prevents the tuning condenser from detuning from vibration. This high gear ratio also makes accurate tuning much easier.

CONTROL UNIT The control unit for the Model 811PV is for installation on the edge of the instrument board. It contains the "On-Off" switch and the volume and tuning control knobs. The calibrated scale is illuminated. The Model 811P, fixed frequency Receiver, utilizes a single control knob, which is mounted on the instrument board. This controls the "On-Off" switch and the volume.

SUPERHETERODYNE 811PV DRIFT A superheterodyne circuit is used for the 811PV, also the 811P. The frequency coverage of the Model 811PV is from 1560 K.C. to 2600 K.C. continuously in one band. The oscillator and I.F. circuits are especially designed to reduce frequency drift to a minimum.

RANGE 811P The Model 811P, the fixed frequency Receiver, can be furnished adjusted for any one particular frequency within the limits of the regular police band, i. e., from 1680 K. C. to 1712 K. C. and from 2398 K. C. to 2490 K. C.

CRYSTAL CONTROL A crystal controlled oscillator circuit is employed in the Model 811P. The crystal control holds the oscillator to the required frequency and is responsible, in a large measure, for the greatly improved performance of this Receiver.

TUBE EQUIPMENT The tubes used in the 811P and 811PV are:

- 78 Tube — Tuned R. F. Amplifier with A. V. C.
- 6A7 Tube — First Detector — Oscillator with A. V. C.
- 78 Tube — I. F. Amplifier
- 75 Tube — Second Detector and "Q" Relay Stage.
- 75 Tube — First A. F. Amplifier with "Q" Control.
- 41 Tube — Power Output Stage
- 84 Tube — Full Wave Rectifier.

ANTENNAS Both Receivers employ antenna circuits that will track satisfactorily on any antenna capacity between 100 and 2500 mmf. This permits satisfactory operation on inserted metal top, door, spare wheel and other special types of antennas.

A. V. C. Both the R. F. stage and the first detector stage have full automatic volume control supplied by the diode detector.

"Q" CIRCUIT In addition to this, the Receivers also have a "Q" or carrier relay circuit. The function of this circuit is to completely silence the Receiver when tuned off carrier, or when the carrier goes off the air. The correct values of the resistor network have been determined and used for satisfactory city operation where it is desirable to exclude street car noises, etc. A switch is provided on the end of the Receiver housing, to open or close this circuit, since, when in remote sections of the territory, where the police transmitter signal might be very weak, slight additional sensitivity can be obtained with the "Q" circuit cut out. This "Q" circuit should not be confused with the conventional squelch circuit. The "Q" relay circuit operates on a carrier field strength equivalent to approximately 8 microvolts in the antenna. A carrier below this strength is almost always of insufficient strength to give satisfactory reception, especially in noisy locations.

DYNAMIC SPEAKER $PECIAL AUDIO A full-powered electro-dynamic speaker is used to give clarity of reproduction and better articulation. The audio and the speaker circuits are especially designed to give the best reproduction of the voice frequencies. The Receiver and speaker are capable of delivering considerably greater undistorted output than is normally required.

POWER SUPPLY The power supply is self contained and is not polarized. The Receiver can be installed in any car without reversing battery connections. Philco's Improved Full-wave Vibrator is used.

ADJUSTMENTS — MODEL 811PV

The Model 811PV is a variable frequency Auto Radio Receiver with a frequency range of 1560 K. C. to 2600 K. C. The scale is calibrated only between 1675 K. C. and 1760 K. C., and between 2100 K. C. and 2500 K. C., since these are the conventional emergency police bands. The Model 811PV has an intermediate frequency of 260 K. C. and does not employ crystal control.

The Receiver must be set up for operation and the volume control set at maximum. The Receiver "Q" switch must be in the off position, cutting out the carrier relay circuit. Use a quality modulated oscillator or signal generator for the test signal, with an output meter connected across the output stage. The signal from the generator should be attenuated so that the output signal is just sufficient to actuate the output meter. The signal should not be strong enough to operate the automatic volume control.

The I. F. transformers are assembled complete with padding condensers.

Both the primary and the secondary padders are placed side by side in the top of the transformer shield can. The adjusting screws are accessible thru the holes in the top of the shield. (See Figure 1.)

I. F. STAGES — The signal generator must be set at exactly 260 K. C. and the generator lead connected to the grid cap of the 78 I. F. tube in series with a .1 mfd. condenser. Adjust the padders ⑧ and ⑨ on the second I. F. transformer for maximum output.

In a like manner, connect the signal generator lead to the grid caps of the 6A7 detector oscillator tube and adjust the padders on the first I. F. transformer.

R. F. — Connect a 2600 K. C. signal to the grid of the 78 R. F. amplifier tube in series with a .1 mfd. condenser. Set the tuning condenser at minimum capacity, using a strip of bond paper as a gauge under the heel of the rotor plates.

Adjust the first detector and oscillator padders ⑦ and ⑩ for maximum output.

Reset the signal generator for a 1600 K. C. signal. Tune in the signal and roll the variable condenser while adjusting the oscillator series padder ⑥.

Recheck the oscillator padder adjustment at 2600 K. C. Connect the signal generator to the Receiver antenna lead, using a 200 mmfd. condenser dummy antenna and adjust the antenna padder ⑤ at 2600 K. C.

IMPORTANT — All adjustments should be repeated after the Receiver has been operated at 6 volts for approximately 8 hours.

I. F. TRANSFORMERS AND PADDERS

The I. F. transformers are assembled complete with padding condensers.

Both the primary and the secondary padders are placed side by side in the top of the transformer shield can. The adjusting screws are accessible thru the holes in the top of the shield. (See Figure 2.)

These models are without peer and are the best modern police Receivers obtainable. They represent the best designing, engineering and production skill in the industry.

©John F. Rider, Publisher

PHILCO RADIO & TELEV. CORP.

MODELS 811PA,811PB
MODEL 811PV
Schematics
Parts

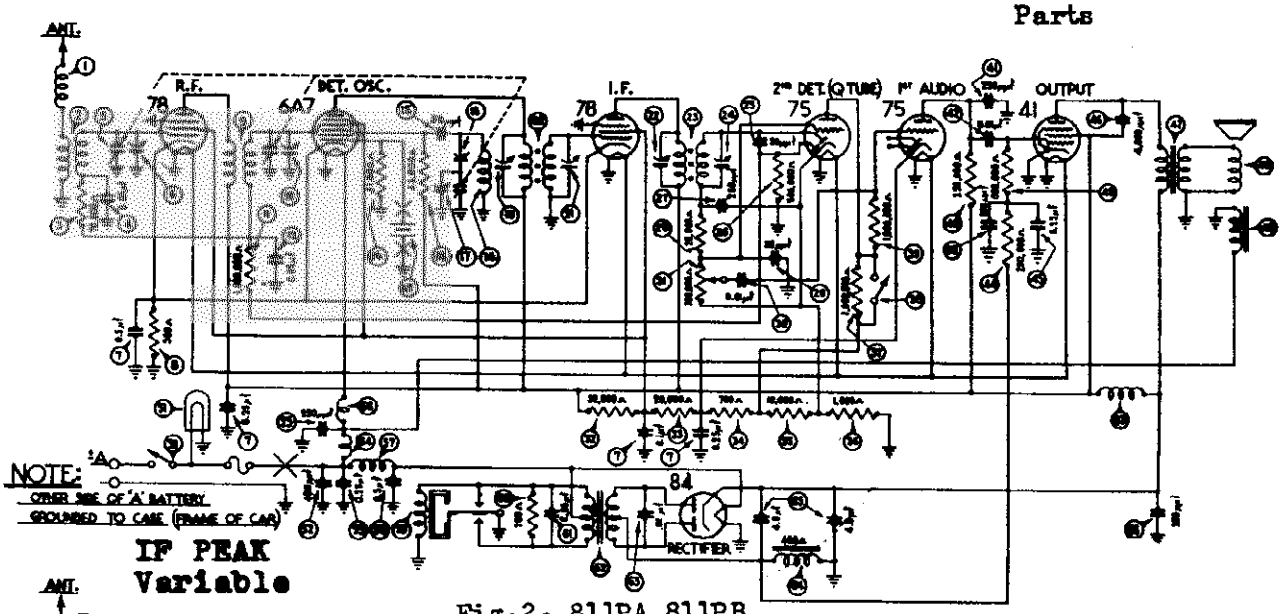

Fig. 2. 811PA,811PB

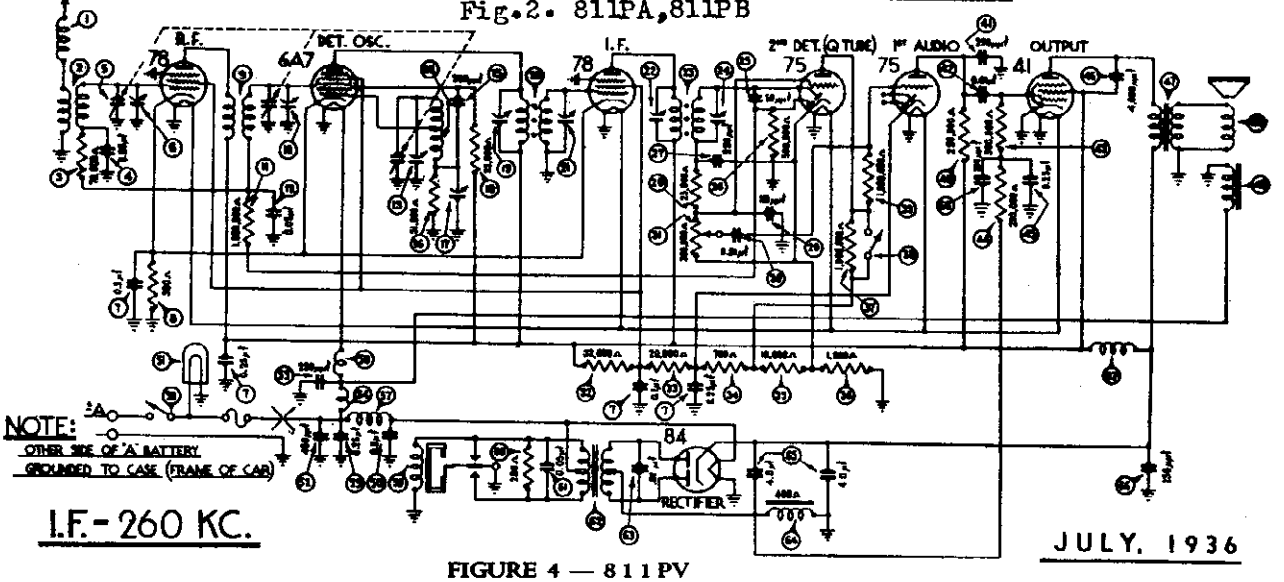

FIGURE 4 — 811PV

PARTS LIST - MODELS 811PA,811PB and 811PV

① Antenna Choke 38-7210
② Antenna Transformer 32-2111
③ Resistor (70,000 ohms) .33-370134
④ Condenser (.05 mfd.) .. 30-4444
⑤ Tuning Condenser (811 P.V.)31-1831
⑥ Tuning Condenser (811F) ..31-1872
⑦ First Padder (on Tun. Cond.) ....
⑧ Condenser (.1-.25-.25-.5 mfd.) ...30-4374
⑨ Resistor (300 ohms) 33-1214
⑩ R. F. Transformer (811P) 32-2112
⑪ R. F. Transformer (811PV) 32-2168
⑫ Second Padder (on Tun. Cond.)
⑬ Resistor (1,000,000 ohms)33-510344
⑭ Condenser (.05 mfd.) 30-4444
⑮ Third Padder (on Tun. Cond.)
⑯ Oscillator Transformer(811P) 32-2131
⑰ Oscillator Transformer (811PV) 32-2113
⑱ Condenser (50 mmfd.) 811P 30-1029
⑲ Condenser (250 mmfd.) (811PV) 30-1032
⑳ Resistor (51,000 ohms) ..33-351344
㉑ Low Frequency Padder 31-6056
㉒ Resistor (25,000 ohms) (811PV) 33-325344
㉓ Resistor (45,000 ohms (811P) 33-345344
㉔ Padder (Pri. 1st I. F. Trans.)
㉕ First I. F. Transformer ..32-2160
㉖ Padder (Sec. 1st I. F. Trans.)
㉗ Padder (Pri. 2nd I. F. Trans.)
㉘ Second I. F. Transformer .32-2164
㉙ Padder (Sec. 2nd I. F. Trans.)
㉚ Condenser (50 mmfd.) 30-1029
㉛ Resistor (500,000 ohms) 33-449344
㉜ Condenser (250 mmfd.) ..30-1032
㉝ Resistor (25,000 ohms) 33-325344
㉞ Condenser (110 mmfd.) ..30-1031
㉟ Condenser (.01 mfd.) 30-4124
㊱ Volume Control (350,000 ohms) 33-5139
㊲ Resistor (32,000 ohms) 33-332434
㊳ Resistor (20,000 ohms) .33-320334
㊴ Resistor (700 ohms) 33-1220
㊵ Resistor (10,000 ohms) 33-310134
㊶ Resistor (1,000 ohms) ...33-3017
㊷ Resistor (1,000,000 ohms)33-510344
㊸ "Q" Control Switch 3253
㊹ Resistor (1,000,000 ohms)33-510344
㊺ Resistor (250,000 ohms) 33-424344
㊻ Condenser (250 mmfd.) ..30-1032
㊼ Condenser (.01 mfd.) 30-4145
㊽ Resistor (500,000 ohms) 33-449344
㊾ Resistor (250,000 ohms) 33-424344
㊿ Condenser (.25 mfd.) 30-4446
(51) Condenser (4000 mmfd.) ..30-4185
(52) Output Transformer 32-7495
(53) Cone and Voice Coil 36-3526
(54) Field Coil 32-9236
(55) On and Off Switch (811P) 42-1188
(56) On and Off Switch (811PV) 42-1160
(57) Pilot Lamp (811 PV Only) 34-2040
(58) Condenser (450 mmfd.) ..31-6065
(59) Condenser (.25 mfd.) 30-4446
(60) "A" Choke 32-1464
(61) Condenser (250 mmfd.) ..30-1032
(62) Filament Choke 32-1930
(63) Vibrator Choke 32-1968
(64) Condenser .5 mfd.) 30-4047
(65) Vibrator 41-3186
(66) Resistor (200 ohms) 33-1210
(67) Condenser (.05 mfd.) 30-4444
(68) Power Transformer 32-7482
(69) Condenser (.01 mfd.) 30-4381
(70) Filter Choke 32-7491
(71) Filter Condenser (4-4 mfd.) 30-2145
(72) Condenser (250 mmfd.) ..30-1032
(73) "B" Choke 32-1932
(74) Condenser (250 mmfd.) ...30-1032
(75) Crystal (811P)
1908 K. C. Crystal 45-2194
Frequencies 1630-1634-1642-1650-1658-1666 K. C.
1953 K. C. Crystal 45-2195
Frequencies 1674-1682-1690-1698-1706-1712 K. C.
2658 K. C. Crystal 45-2196
Frequencies 2382-2390-2398-2406-2414 K. C.
2698 K. C. Crystal 45-2197
Frequencies 2422-2430-2442-2450 K. C.
2734 K. C. Crystal 45-2198
Frequencies 2458-2466-2474-2482-2490 K. C.
Four-prong Socket 27-6044
Five-prong Socket 27-6035
Six-prong Socket 27-6036
Seven-prong Socket 27-6037
Relay Circuit Switch Plate 28-2415
Speaker Clamps 20-3131
Control Assembly (811PV) 42-5585
Control Assembly (811P) ..42-5591
Bracket (811PV) 28-3711
Scale Assembly (811PV) ..42-5590
Tuning and Volume Shaft (811PV) 28-8595
Volume Shaft (811P) 28-8620
Tuning and Volume Knob (811PV) 27-4288
Volume Knob (811P) 27-4208
Switch Lever Knob (811PV) 27-4314
Antenna Lead Assembly ..41-3191
Fuse 7227
Fuse Insulator 27-7728
Receiver Mounting Plate ...28-3086
Receiver Housing 38-1657

©John F. Rider, Publisher

ADJUSTMENTS — MODELS 811PA AND 811PB

The fixed frequency Auto Radio Receivers are identical, except for the crystals used to obtain the various oscillator frequencies.

The Receivers, when used with the proper crystals, can be adjusted for any specified frequency between the limits of 1630 K. C. and 1712 K. C. (Model 811PA) and 2382 K. C. and 2490 K. C. (Model 811 PB). Different crystals are used to obtain these frequencies. The crystal frequency, however, is no indication of the Receiver frequency adjustment.

FREQ. OF CRYSTAL	RECEIVER FREQ.	PART NO. CRYSTAL
1908 K. C.	1630-1634-1642 1650-1658-1666 K. C.	45-2194
1953 K. C.	1674-1682-1690 1698-1706-1712 K. C.	45-2195
2658 K. C.	2382-2390-2398 2406-2414 K. C.	45-2196
2696 K. C.	2422-2430-2442 2450 K. C.	45-2197
2784 K. C.	2458-2466-2474 2482-2490- K. C.	45-2198

The I. F. frequency used in each Receiver is the difference between the frequency of the crystal in the Receiver and the frequency of the transmitter, i. e.: the transmitter frequency is 2422 K. C., the crystal used is 2696 K. C., the difference is 274 K. C., which is the frequency to which the I. F. amplifier must be tuned.

The Receivers are carefully adjusted to the required frequency at the factory and ordinarily need no readjustments except when the transmitter frequency is changed. Then the Receiver must be padded while warm.

The Receiver must be set up for operation and the volume control set at maximum. The Receiver "Q" switch must be in the off position, cutting out the carrier relay circuit. Use a quality modulated oscillator or signal generator for the test signal, with an output meter connected across the output stage. The signal from the signal generator should be attenuated so that the output signal is just sufficient to actuate the output meter. The signal should not be strong enough to operate the automatic volume control.

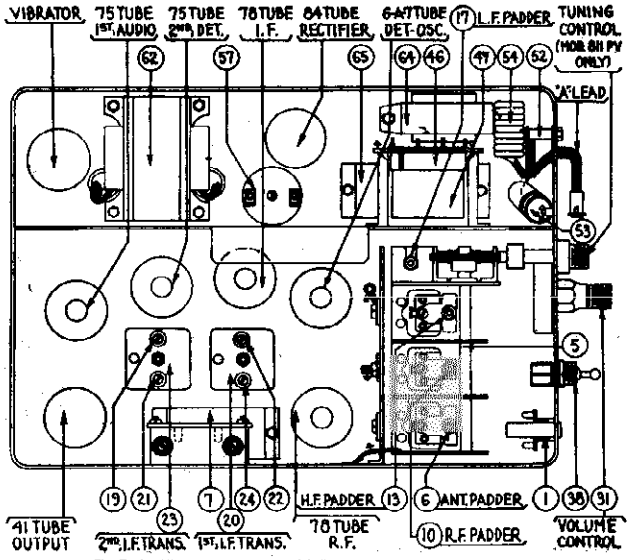

FIGURE 3 — MODELS 811

I. F. STAGES — The signal generator must be set exactly on the predetermined frequency and the generator lead connected to the grid cap of the 78 I. F. tube in series with a .1 mfd. condenser. Adjust the padders ㉘, ㉔ on the second I. F. transformer for maximum output.

In a like manner, connect the signal generator lead to the grid cap of the 6A7 detector oscillator tube and adjust the padders ⑲ and ㉑ on the first I. F. transformer.

Check the adjustments of the second I. F. transformer and the first I. F. transformer.

R. F. — Tune the signal generator to the frequency of the transmitter and connect the output of the generator to the Receiver antenna lead, through a 200 mmfd. dummy antenna.

The variable condenser is locked in place with two set screws. Adjust these and tune the variable condenser to the input frequency. If the crystal oscillator circuit does not function at first, loosen the padder ⑬ on the oscillator section of the tuning condenser and also the series padder ⑰. If the oscillator output is low, it can be increased by adjusting the padder ⑱ for the higher frequencies and the padder ⑰ for the lower frequencies.

Adjust the R. F. and detector padders ⑥ and ⑩ for maximum output. If after adjusting, they are loose, back out the tuning condenser slightly — or if they are too tight, turn the condenser in slightly. Then readjust the padders.

On the Model 811PA (lower frequency band) adjust the series padder ⑰ for maximum output reading, and on the Model 811PB (higher frequency band) adjust the high frequency padder ⑬ The adjustment will not give a sharp peak, but it is possible to adjust for the maximum output. After this is obtained, back off the adjusting nut a half turn.

After completing these adjustments, recheck all the padders. This time, using a carefully calibrated signal generator, or better still, test tone from the police transmitter, connected to the Receiver antenna lead through a 200 mmfd. dummy antenna. Recheck the padders ⑥, ⑩, ⑱ and ⑰ on the gang condenser. Using the same signal, adjust the second I. F. and first I. F. padders for maximum output.

IMPORTANT — These adjustments should be repeated after the Receiver has been operated at 8 volts for approximately 8 hours.

DO NOT OPEN THE CRYSTAL HOLDER. If, for any reason whatever it has been opened, the crystal and plates should be very carefully cleaned with carbon tetrachloride. After cleaning, the crystal must not be touched by the fingers. Use a clean cloth for handling.

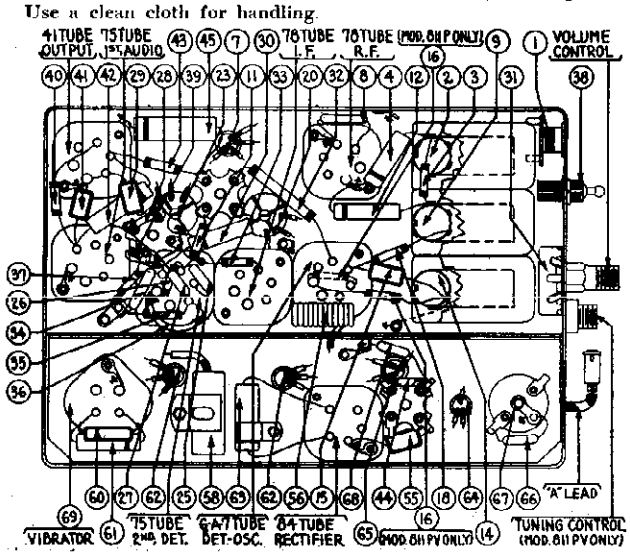

FIGURE 5 — MODELS 811

Trimmers, Chassis Parts List

PHILCO RADIO & TELEV. CORP.

MODEL 816
Schematic, Socket

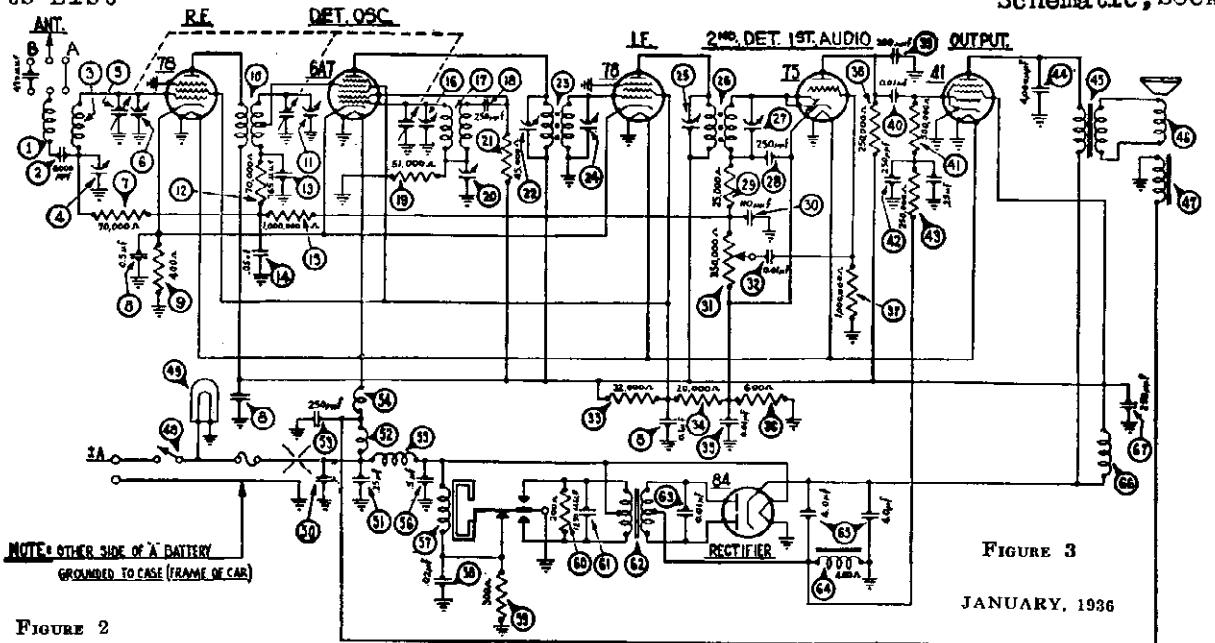

FIGURE 3

JANUARY, 1936

FIGURE 2

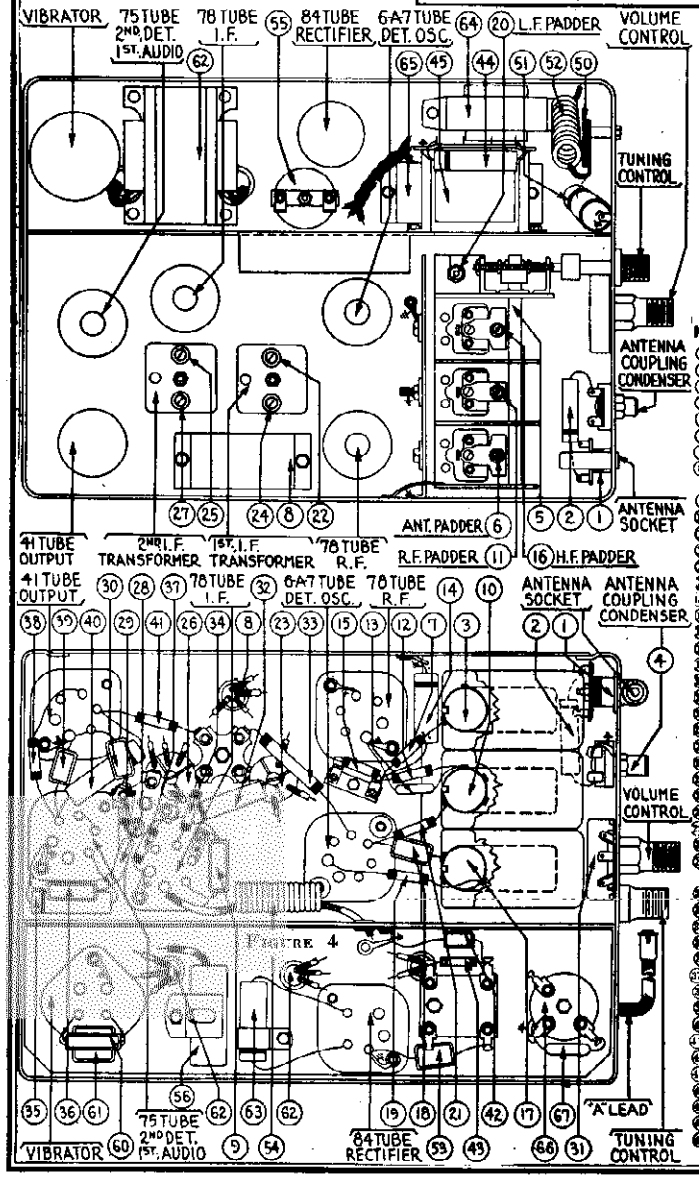

FIGURE 4

ANTENNA CONNECTIONS

NOTE:

•USE A WIRING WHEN RECEIVER IS INSTALLED IN A CAR HAVING A TOP SCREEN ANTENNA, UNDERCAR ANTENNA, SPARE WHEEL ANTENNA OR ANTENNA HAVING SIMILARLY LOW RELATIVE CAPACITANCE (30μμf TO 450μμf)

•USE B WIRING WHEN RECEIVER IS INSTALLED IN A CAR HAVING A METAL INSERT TOP ANTENNA, INSULATED DOOR ANTENNA, INSULATED TRUNK COVER ANTENNA OR ANTENNA HAVING SIMILARLY HIGH RELATIVE CAPACITANCE (450μμf TO 2500μμf)

I.F.-260 KC.

For Alignment and Remote Control Parts List, see Index

MODEL 816 PARTS LIST

No.	Description	Part No.
1	Antenna Choke	38-7516
2	Condenser (6000 mmfd.)	30-4125
3	Antenna Transformer	32-1984
4	Antenna Coupling Condenser	31-6082
5	Tuning Condenser	31-1767
6	First Padder (on Tun. Cond.)	
7	Resistor (70,000 ohms)	33-370334
8	Condenser (.1-.25-.25-.5 mfd.)	30-4374
9	Resistor (400 ohms)	33-1211
10	R. F. Transformer	32-1985
11	Second Padder (on Tun. Cond.)	
12	Resistor (70,000 ohms)	33-370334
13	Condenser (765 mmfd.)	30-1069
14	Condenser (.05 mfd.)	30-4020
15	Resistor (1,000,000 ohms)	33-510344
16	Third Padder (on Tun. Cond.)	
17	Oscillator Transformer	32-1986
18	Condenser (250 mmfd.)	30-1032
19	Resistor (51,000 ohms)	33-351344
20	Low Frequency Padder	31-6083
21	Resistor (45,000 ohms)	33-345344
22	Padder (Pri. 1st I. F. Trans.)	
23	First I. F. Transformer	32-1928
24	Padder (Sec. 1st I. F. Trans.)	
25	Padder (Pri. 2nd I. F. Trans.)	
26	Second I. F. Transformer	32-1929
27	Padder (Sec. 2nd I. F. Trans.)	
28	Condenser (250 mmfd.)	30-1032
29	Resistor (25,000 ohms)	33-325344
30	Condenser (110 mmfd.)	30-1031
31	Volume Control (350,000 ohms)	33-5148
32	Condenser (.01 mfd.)	30-4124
33	Resistor (32,000 ohms)	33-332433
34	Resistor (20,000 ohms)	33-320334
35	Condenser (.01 mfd.)	30-4124
36	Resistor (600 ohms)	33-1212
37	Resistor (1,000,000 ohms)	33-510344
38	Resistor (250,000 ohms)	33-424344
39	Condenser (250 mmfd.)	30-1032
40	Condenser (.01 mfd.)	30-4145
41	Resistor (500,000 ohms)	33-449344
42	Condenser (250 mmfd.)	30-1032
43	Resistor (250,000 ohms)	33-424344
44	Condenser (4000 mmfd.)	30-4185
45	Output Transformer	32-7495
46	Cone and Voice Coil	36-3526
47	Field Coil Assembly	32-9236
48	"On" and "Off" Switch	42-1160
49	Pilot Lamp	34-2039
50	Condenser (450 mmfd.)	31-6065
51	Condenser (.25 mfd.)	30-4146
52	"A" Choke	32-1464
53	Condenser (250 mmfd.)	30-1032
54	Filament Choke	32-1930
55	Vibrator Choke	32-1968
56	Condenser (.5 mfd.)	30-1047
57	Vibrator	38-5036
58	Condenser (.02 mfd.)	30-4039
59	Resistor (300 ohms)	33-3130
60	Resistor (200 ohms)	33-1210
61	Condenser (1250 mmfd.)	5886
62	Power Transformer	32-7482
63	Condenser (.01 mfd.)	30-4381
64	Filter Choke	32-7491
65	Filter Condenser (4-4 mfd.)	30-2145
66	R. F. Choke	32-1932
67	Condenser (250 mmfd.)	30-1032
	Four Prong Socket	27-6044
	Five Prong Socket	27-6035
	Six Prong Socket	27-6036
	Seven Prong Socket	27-6037
	Clamps (Speaker Mtg.)	29-3131
	Speaker Cable	41-3180
	Control Assembly (816)	42-5534
	Scale Assembly	42-5539
	Interference Condenser (⅛ mfd.)	30-4007
	Distributor Resistor	33-1196
	Tuning and Volume Shaft	28-8495
	Tee Bolt (Receiver Mtg.)	28-6161
	Nuts (Receiver Mtg.)	W38A
	Bracket (Control Mtg.)	29-3711
	Fuse	7227
	Fuse Insulator	27-7729
	Antenna Loom Assembly (816)	41-3191
	Antenna Connector	29-6423
	Antenna Connector Insulator	27-8199
	Condenser Plug	30-4412
	Control Assembly (816B-C)	42-5561
	Control Assembly (816P)	42-5562
	Scale Assembly (816B-C)	42-5570
	Scale Assembly (816P)	42-5540
	Knob (816P)	27-4299
	Knob (816-816B-C)	27-4288
	Knob Base	28-3698

©John F. Rider, Publisher

MODEL 817
Schematic, Chassis Notes, Parts List

PHILCO RADIO & TELEV. CORP.

NOTE: When receiver is installed in a car having top, under-car, spare wheel, or antenna's having similar lo-relative capacitance (50mmf.-450mmf.) use connector plug in "A". When installed in a car having a metal insert top, insulated door, insulated trunk cover, or antenna's having similarly hi-relative capacitance (450mmf.-2500mmf.) use condenser plug in "B".

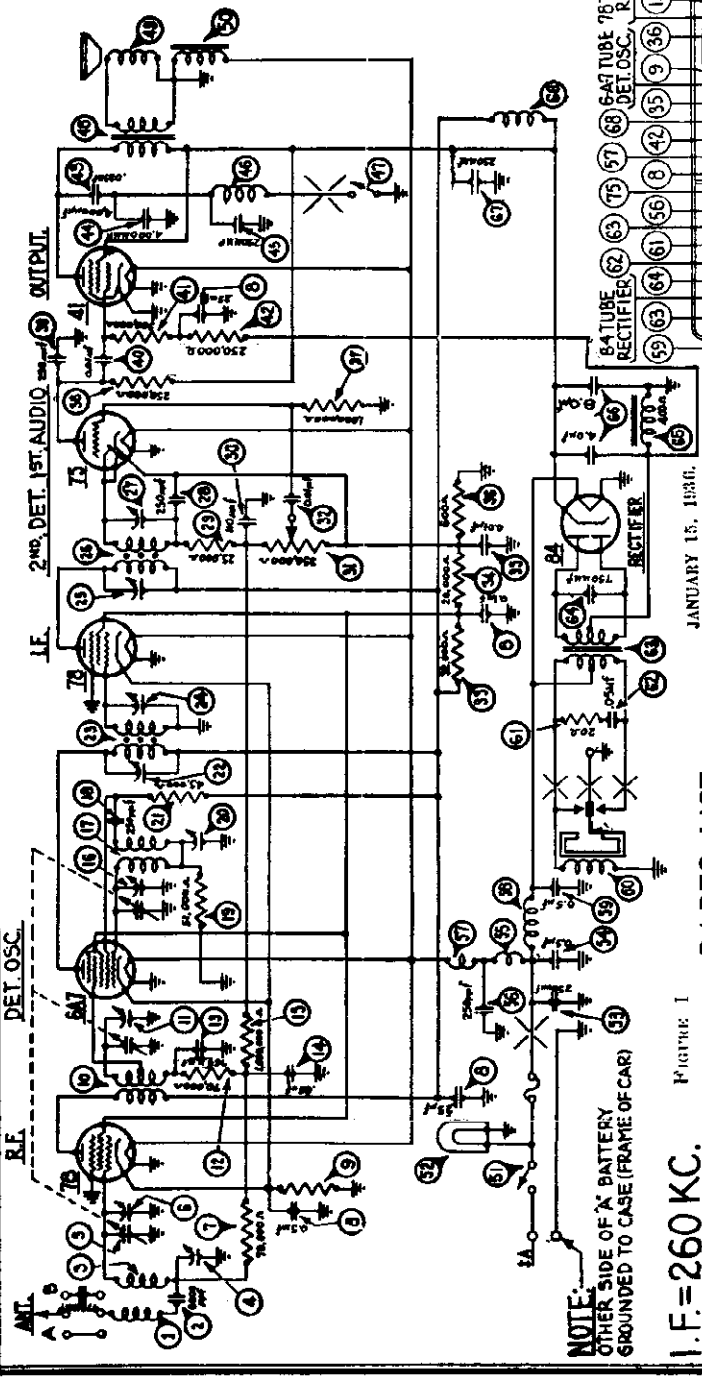

FIGURE 1

I.F.=260 KC.

For Remote Control Parts List, see Index

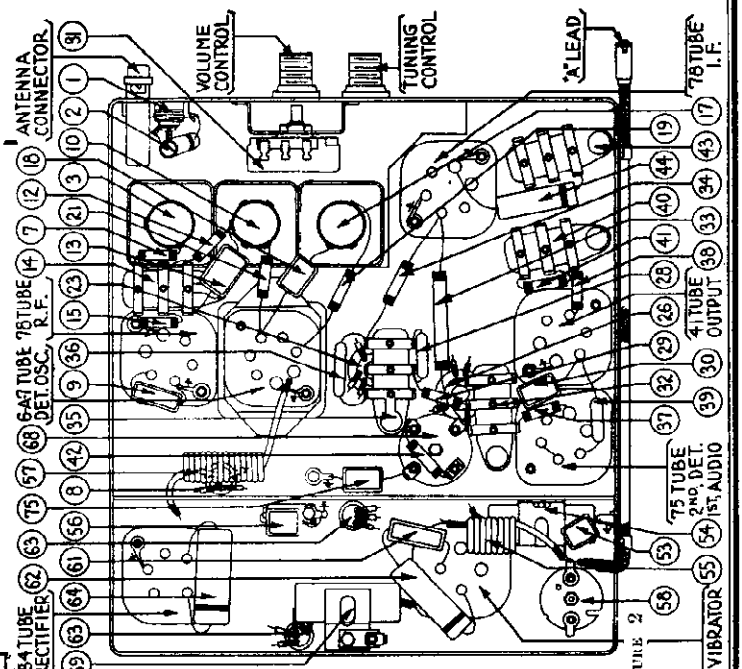

FIGURE 2

PARTS LIST

JANUARY 15, 1936.

No.	Description	Part No.
	Antenna Loop Assembly	41-3191
	Scale Assembly (817B-C)	42-3570
	Scale Assembly (817P)	42-3540
(1)	Antenna Choke	38-5316
(2)	Condenser (0.0500 mmfd.)	30-4125
(3)	Antenna Transformer	32-1981
(4)	Antenna Coupling Condenser	31-4082
(5)	Tuning Condenser	31-1760
(6)	First Padder (Ant. trim. cond.)	
(7)	Resistor (70,000 ohms)	33-5[illegible]31
(8)	Condenser (1.25-25.5 mfd.)	30-1115
(9)	Resistor (150 ohms)	33-1218
(10)	Condenser (.05 mfd.)	30-1038
(11)	Resistor (1,000,000 ohms)	33-5[illegible]31
(12)	Condenser (.05 mfd.)	30-1038
(13)	R. F. Transformer	32-1985
(14)	Second Padder (Ant. trim. cond.)	
(15)	Resistor (70,000 ohms)	33-5[illegible]31
(16)	Condenser (.05 mfd.)	30-1038
(17)	Resistor (1,000,000 ohms)	33-5[illegible]31
(18)	Third Padder (Ant. trim. cond.)	
(19)	Oscillator Transformer	32-1986
(20)	Condenser (250 mmfd.)	30-1022
(21)	Resistor (31,000 ohms)	33-5[illegible]14
(22)	Low Frequency Padder	31-4083
(23)	Resistor (45,000 ohms)	33-5[illegible]14
(24)	Padder (Pri. 1st I. F. Trans.)	
(25)	First I. F. Transformer	32-2026
(26)	Padder (Sec. 1st I. F. Trans.)	
(27)	Padder (Pri. 2nd I. F. Trans.)	
(28)	Second I. F. Transformer	32-2027
(29)	Padder (Sec. 2nd I. F. Trans.)	
(30)	Condenser (250 mmfd.)	30-1022
(31)	Resistor (25,000 ohms)	33-5[illegible]44
(32)	Condenser (.05 mfd.)	30-1038
(33)	Resistor (1,000,000 ohms)	33-5[illegible]31
(34)	Condenser (.05 mfd.)	30-1038
(35)	Resistor (250,000 ohms)	33-4[illegible]44
(36)	Resistor (1,000,000 ohms)	33-5[illegible]31
(37)	Condenser (250 mmfd.)	30-1022
(38)	Resistor (250,000 ohms)	33-4[illegible]44
(39)	Condenser (.025 mfd.)	7623-080
(40)	Condenser *(4000 mmfd.)	30-1185
(41)	Condenser (250 mmfd.)	30-1022
(42)	Condenser (.01 mfd.)	3903-080
(43)	Resistor (500,000 ohms)	33-4[illegible]14
(44)	Resistor (250,000 ohms)	33-4[illegible]44
(45)	Condenser (.025 mfd.)	7623-080
(46)	Tone Control Switch	42-1150
(47)	Output Transformer	32-7405
(48)	Cone and Voice Coil	36-8586
(49)	Field Coil Assembly	38-3597
(50)	"On and Off Switch"	42-1160
(51)	Pilot Lamp	34-2033
(52)	Condenser (250 mmfd.)	30-1022
(53)	Condenser (.5 mfd.)	30-4015
(54)	"A" Choke	32-1132
(55)	Condenser (250 mmfd.)	30-1022
(56)	Vibrator Choke	32-2033
(57)	Filament Choke	32-2038
(58)	Condenser (.5 mfd.)	30-4015
(59)	Resistor (25,000 ohms)	33-5[illegible]44
(60)	Vibrator	41-2170[illegible]
(61)	Resistor (20 ohms)	33-4[illegible]33
(62)	Condenser (.05 mfd.)	30-4028
(63)	Power Transformer	32-7550
(64)	Condenser (750 mmfd.)	30-4120
(65)	Filter Choke	32-7545
(66)	Filter Condenser (4-8 mfd.)	30-2150
(67)	Condenser (250 mmfd.)	30-1022
(68)	"B" Choke	32-1281
	Four Prong Socket	27-6044
	Five Prong Socket	27-6035
	Six Prong Socket	27-6036
	Seven Prong Socket	27-6037
	Control Assembly (817)	42-5536
	Bracket (Control Mtg.)	29-3711
	Knob	27-4288
	Condenser Connector	30-4112
	Connector Plug	29-6423
	Insulator	27-8199
	Fuse	7927
	Fuse Insulator	27-7795
	"Fuse" Bolt (Fuse Mtg.)	28-6161
	Nut (Fuse Mtg.)	27518A
	Socket (Model 78)	36-1203
	Pilot Lamp Assembly	38-7313
	Dial Assembly	42-5538
	Tuning and Volume Shaft	28-8495
	Dielectric Resistor	33-1106
	Interference Condenser	30-4007
	Knob (817P)	27-4289
	Knob (817B-C)	27-4288
	Knob Base	28-3698

©John F. Rider, Publisher

PHILCO RADIO & TELEV. CORP.

MODEL 816
MODEL 817
Socket, Trimmers
Alignment

I. F. TRANSFORMERS AND PADDERS

The I. F. transformers are assembled complete with padding condensers.

Both the primary and the secondary padders are placed side by side in the top of the transformer shield can. The adjusting screws are accessible thru the holes in the top of the shield (See Figure).

The coil windings terminate in leads instead of terminals or lugs. The color scheme of the leads is given in Figure

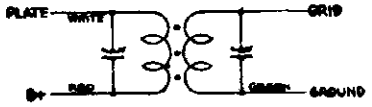

If replacements are ever necessary, replace the entire coil assembly, 32-2026 for the first I. F. stage and 32-2027 for the second I. F. stage. Neither the coil nor the padders will be furnished separately. Order only by the above numbers.

MODEL 816 817 ADJUSTMENTS

All padding adjustments are carefully made at the factory and ordinarily no readjustments are necessary. However, when readjustments are required, the procedure given below must be followed in detail.

Equipment

Fully charged heavy duty storage battery or 6-volt power pack, 048A Philco Set Tester, 3164 Padding wrench, 27-7159 Padding screw driver.

General

OUTPUT METER—The output meter must be connected by means of an adapter to the plate of the type 41 output tube and to the Receiver chassis.

SIGNAL GENERATOR—With the Receiver and signal generator set up for operation at the prescribed frequency, turn the Receiver volume control on full and set the signal generator attenuator so that a half scale reading is obtained on the output meter. The signal in the speaker should be audible but not loud.

The shielding on the signal generator output lead must be connected to the Receiver housing.

Procedure

I. F.—Set the signal generator at exactly 260 K. C. Connect the generator lead to the grid cap of the 78 I. F. tube in series with a .1 mfd. condenser (without removing the grid cap).

Adjust the secondary screw padder (27) on the second I. F. transformer for maximum reading on the output meter. Then adjust the primary screw padder (25) for maximum reading. (See Figure for location of padders).

Remove the generator lead from the 78 tube.

Connect the generator lead to the grid cap of the 6A7 tube in series with a .1 mfd. condenser (without removing the grid cap). Adjust the secondary screw padder (24) on the first I. F. transformer for maximum reading on the output meter. Then adjust the primary screw padder (22) for maximum reading. (See Figure for location of padders).

HIGH FREQUENCY AND R. F.—After padding the first I. F. stage remove the generator lead from the 6A7 tube.

Set the signal generator at 1550 K. C. and then connect the generator lead to the grid cap of the 78 R. F. tube in series with a .1 mfd. condenser (without removing the grid cap).

Turn the tuning condenser plates out of mesh as far as they will go. With the tuning condenser in this position, adjust the high frequency padder (16) and the R. F. padder (11) until the maximum reading is obtained on the output meter. This is the true setting for 1550 K. C., 155 on the dial scale.

LOW FREQUENCY—Turn the tuning condenser plates in mesh to approximately 580 K. C., 58 on the dial scale and set the signal generator at 580 K. C. Roll the tuning condenser and adjust the low frequency padder screw (46) for maximum reading on the output meter.

HIGH FREQUENCY RE-ADJUSTMENT—Turn the tuning condenser plates out of mesh as far as they will go and set the signal generator at 1550 K. C. Then adjust the high frequency padder (16) again for maximum reading on the output meter.

Remove the generator lead from the 78 R.F. tube.

ANTENNA—Connect the generator lead to the antenna cable assembly (made up of Part No. L1915 loom, 1-27-7133 terminal and 40 inches of 16 strand No. 30 wire), using a 200 mmfd. condenser in series between the two leads. Place the connector plug in the antenna socket on the Receiver. Plug the cable into the antenna socket.

Turn the tuning condenser in mesh to 580 K. C., and adjust the signal generator at 580 K. C. Adjust the Antenna coupling condenser (4) for maximum reading.

Turn the tuning condenser to 1400 K. C. and set the generator at 1400 K. C. Adjust the padders (11) and (6) for the maximum reading on the output meter.

When the antenna stage adjustment is made with the Receiver installed in the car, the Receiver antenna lead must be connected to the car antenna in the usual manner. Connect the signal generator output lead to a wire placed near the car antenna but not connected to it.

When installing the radio in a car, follow the installation instructions carefully. The correct connector must be used in the antenna lead connector in the Receiver and the antenna coupling condenser must be adjusted to the car antenna.

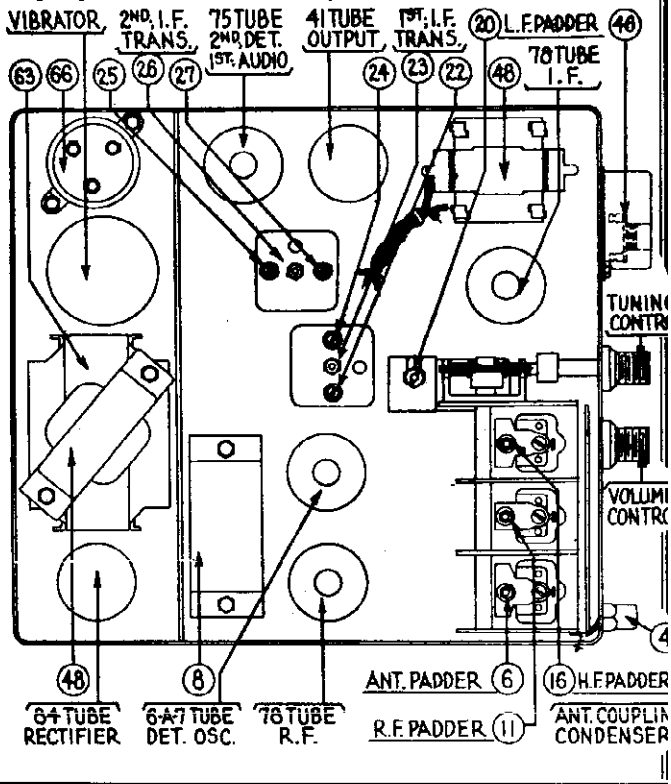

The Model 817 Receiver is furnished with the new streamline "wide vision" control which can be installed on the edge of instrument board. This control unit is exceptionally attractive and is designed to blend harmoniously with the instrument boa of practically all cars. The circuit and layout of the Models 817B-817C and 817P Receivers are the same as the Model However, these Receivers are equipped with a special "customed" control unit which matches the instrument board fittings, is designed for installation in the space provided for radio control in the instrument board of the 1936 Buick, Chevrolet Pontiac cars.

©John F. Rider, Publisher

MODEL 818
MODEL 818K
Socket, Trimmers
Alignment

PHILCO RADIO & TELEV. CORP.

I. F. Transformers and Padders

The I. F. transformers are assembled complete with padding condensers.

Both the primary and the secondary padders are placed side by side in the top of the transformer shield can. The adjusting screws are accessible thru the holes in the top of the shield. (See Figure).

The coil windings terminate in leads instead of terminals or lugs. The color scheme of the leads is given in Figure

If replacements are ever necessary, replace the entire coil assembly, 32-2026 for the first I. F. stage and 32-2027 for the second I. F. stage. Neither the coil nor the padders will be furnished separately. Order only by the above numbers.

MODEL 818 818K ADJUSTMENTS

All padding adjustments are carefully made at the factory and ordinarily no readjustments are necessary. However, when readjustments are required, the procedure given below must be followed in detail.

Equipment

Fully charged heavy duty storage battery or 6-volt power pack, 048A Philco Set Tester, 3164 Padding wrench, 27-7159 Padding screw driver.

General

OUTPUT METER—The output meter must be connected by means of an adapter to the plate of the type 41 output tube and to the Receiver chassis.

SIGNAL GENERATOR—With the Receiver and signal generator set up for operation at the prescribed frequency, turn the Receiver volume control on full and set the signal generator attenuator so that a half scale reading is obtained on the output meter. The signal in the speaker should be audible but not loud.

The shielding on the signal generator output lead must be connected to the Receiver housing.

Procedure

I. F.—Set the signal generator at exactly 260 K. C. Connect the generator lead to the grid cap of the 78 I. F. tube in series with a .1 mfd. condenser (without removing the grid cap).

Adjust the secondary screw padder ㉙ on the second I. F. transformer for maximum reading on the output meter. Then adjust the primary screw padder ㉗ for maximum reading. (See Figure for location of padders).

Remove the generator lead from the 78 tube.

Connect the generator lead to the grid cap of the 6A7 tube in series with a .1 mfd. condenser (without removing the grid cap). Adjust the secondary screw padder ㉙ on the first I. F. transformer for maximum reading on the output meter. Then adjust the primary screw padder ㉘ for maximum reading. (See Figure for location of padders).

HIGH FREQUENCY AND R. F.—After padding the first I. F. stage remove the generator lead from the 6A7 tube.

Set the signal generator at 1550 K. C. and then connect the generator lead to the grid cap of the 78 R. F. tube in series with a .1 mfd. condenser (without removing the grid cap).

Turn the tuning condenser plates out of mesh as far as they will go. With the tuning condenser in this position, adjust the high frequency padder ⑱ and the R. F. padder ⑪ until the maximum reading is obtained on the output meter. This is the true setting for 1550 K. C., 155 on the dial scale.

LOW FREQUENCY—Turn the tuning condenser plates in mesh to approximately 580 K. C., 58 on the dial scale and set the signal generator at 580 K. C. Roll the tuning condenser and adjust the low frequency padder screw ⑳ for maximum reading on the output meter.

HIGH FREQUENCY RE-ADJUSTMENT—Turn the tuning condenser plates out of mesh as far as they will go and set the signal generator at 1550 K. C. Then adjust the high frequency padder ⑯ again for maximum reading on the output meter.

Remove the generator lead from the 78 R. F. tube.

ANTENNA—Connect the generator lead to the antenna cable assembly (made up of Part No. 1.1915 loom, 1-27-7133 terminal and 40 inches of 16 strand No. 30 wire), using a 200 mmfd. condenser in series between the two leads. Place the connector plug in the antenna socket on the Receiver. Plug the cable into the antenna socket.

Turn the tuning condenser in mesh to 580 K. C., and adjust the signal generator at 580 K. C. Adjust the Antenna coupling condenser ④ for maximum reading.

Turn the tuning condenser to 1400 K. C. and set the generator at 1400 K. C. Adjust the padders ⑪ and ⑥ for the maximum reading on the output meter.

When the antenna stage adjustment is made with the Receiver installed in the car, the Receiver antenna lead must be connected to the car antenna in the usual manner. The signal generator output lead should be connected to a wire placed near the car antenna but not connected to it.

When installing the radio in a car, follow the installation instructions carefully. The correct connector must be used in the antenna lead connector in the Receiver and the antenna coupling condenser must be adjusted to the car antenna.

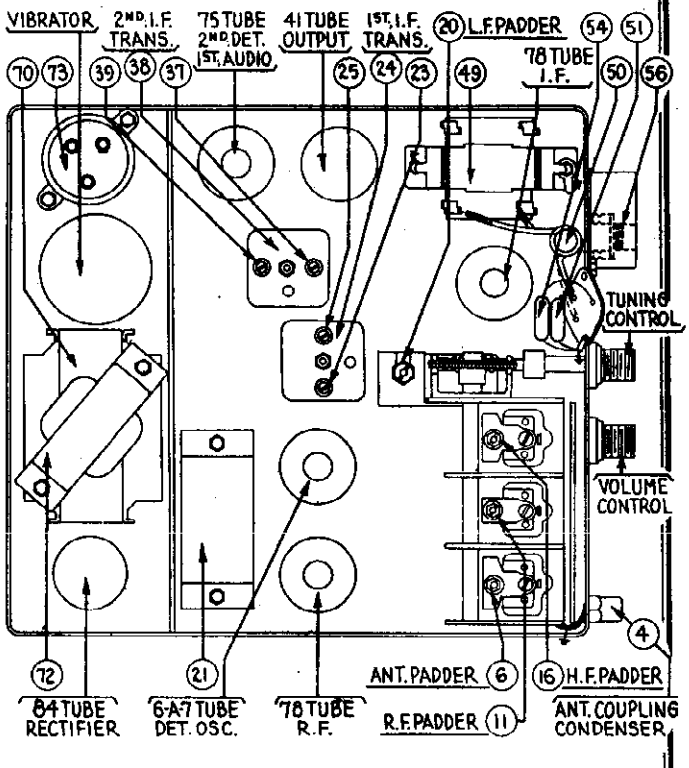

©John F. Rider, Publisher

PHILCO RADIO & TELEV. CORP.

MODEL 818
Schematic, Chassis
Notes, Parts

NOTE: When receiver is installed in a car having top, under-car, spare wheel, or antenna's having similar lo-relative capacitance (50mmf.-450mmf.) use connector plug in "A". When installed in a car having a metal insert top, insulated door, insulated trunk cover, or antenna's having similarly hi-relative capacitance (450mmf.-2500mf.) use condenser plug in "B".

No.	Description	Part No.	No.	Description	Part No.
	Connector Plug	29-6423		Speaker Cable Assembly (overhead speaker)	41-3189
	Fuse	7227		Distributor Resistor	33-1196
	Fuse Insulator	27-7729		Interference Cond. (.5 mfd.)	30-4007
	"Tee" Belt (Rec. Mtg.)	28-6161		Condenser Connector	30-4412
	Nut (Rec. Mtg.)	W318A			

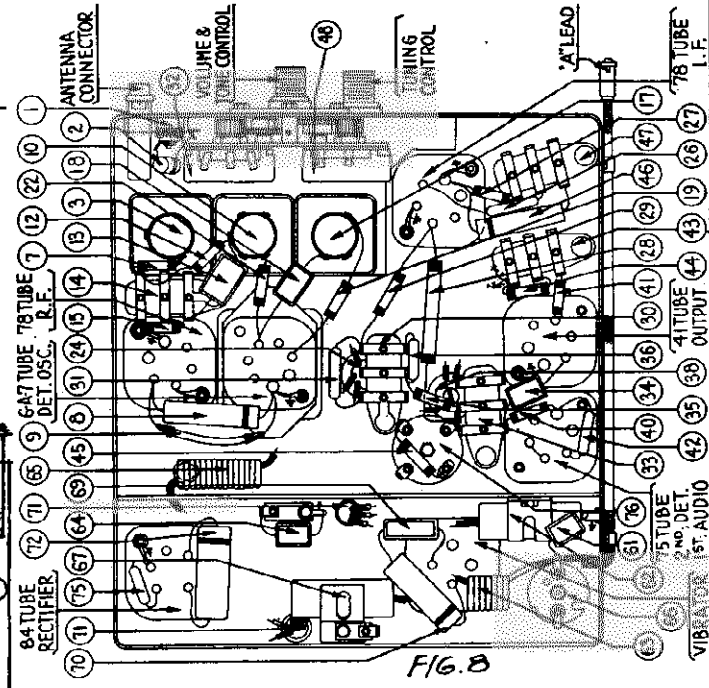

FIG. 8

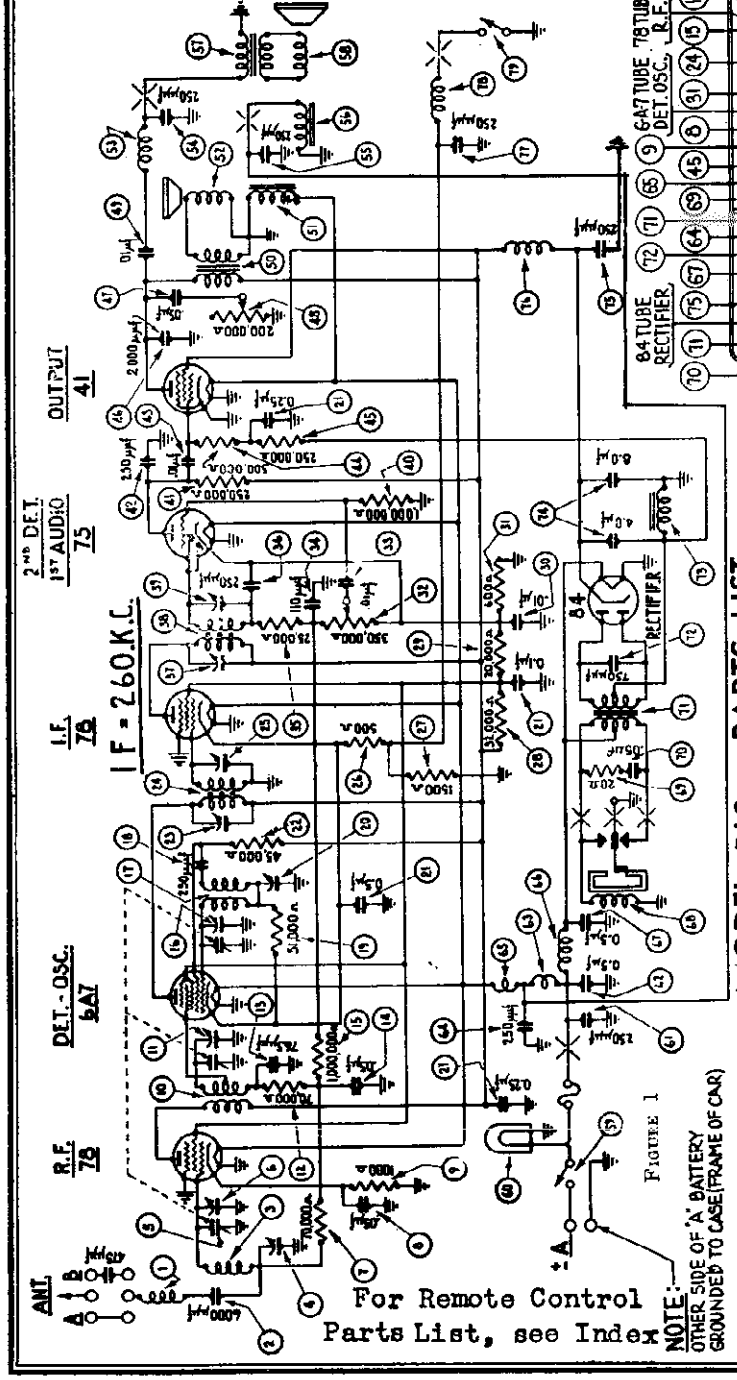

FIGURE 1

For Remote Control Parts List, see Index

MODEL 818 — PARTS LIST

No.	Description	Part No.
①	Antenna Choke	33-7516
②	Condenser (8000 mmfd.)	30-41258
③	Antenna Transformer	32-1984
④	Antenna Coupling Condenser	31-4082
⑤	Tuning Condenser	31-1769
⑥	First Padder (on tun. cond.)	
⑦	Resistor (70,000 ohms)	38-370334
⑧	Condenser (.05 mfd.)	30-4020
⑨	Resistor (1000 ohms)	33-3017
⑩	R. F. Transformer	32-1985
⑪	Resistor (70,000 ohms)	38-370334
⑫	Condenser (.05 mfd.)	30-1089
⑬	Resistor (1,000,000 ohms)	33-510344
⑭	Second Padder (on tun. cond.)	
⑮	Oscillator Transformer	32-1986
⑯	Condenser (250 mmfd.)	30-1032
⑰	Resistor (51,000 ohms)	38-351344
⑱	Low Frequency Padder	31-6083
⑲	Condenser (.1-.25-.5 mfd.)	30-4415
⑳	Resistor (45,000 ohms)	38-345344
㉑	Padder (Pri. 1st I. F. Trans.)	32-2026
㉒	First I. F. Transformer	32-2236
㉓	Padder (Sec. 1st I. F. Trans.)	33-1213
㉔	Resistor (500 ohms)	33-215334
㉕	Resistor (1500 ohms)	33-332434
㉖	Resistor (32,000 ohms)	33-320334
㉗	Resistor (20,000 ohms)	33-3903-0SU
㉘	Condenser (.01 mfd.)	33-1212
㉙	Resistor (600 ohms)	33-1212
㉚	Volume Control (350,000 ohms)	33-5149
㉛	Condenser (.01 mfd.)	33-3908-0SU
㉜	Condenser (110 mmfd.)	30-1031
㉝	Resistor (25,000 ohms)	33-325344
㉞	Condenser (250 mmfd.)	30-1032
㉟	Padder (Pri. 2nd I. F. Trans.)	32-2027
㊱	Second I. F. Transformer	32-2027
㊲	Padder (Sec. 2nd I. F. Trans.)	
㊳	Resistor (1,000,000 ohms)	33-510344
㊴	Resistor (250,000 ohms)	33-424344
㊵	Condenser (250 mmfd.)	30-4177
㊶	Condenser (.05 mfd.)	38326-0SU
㊷	Tone Control (200,000 ohms)	33-5150
㊸	Condenser (.01 mfd.)	30-4381
㊹	Output Transformer	32-7495
㊺	Field Coil Assembly	36-3597
㊻	Cone and Voice Coil	38-3586
㊼	Choke	32-1930
㊽	Condenser (250 mmfd.)	30-1032
㊾	Condenser (250 mmfd.)	30-1032
㊿	Field Coil Assembly (overhead speaker)	32-2236
(51)	Output Transformer (overhead speaker)	32-7507
(52)	Cone and Voice Coil (overhead speaker)	36-3526
(53)	"On-Off" Switch	42-1186
(54)	Pilot Lamp	34-2039
(55)	Condenser (250 mmfd.)	30-1032
(56)	Condenser (.5 mfd.)	30-4015
(57)	"A" Choke	32-1432
(58)	Condenser (250 mmfd.)	30-1032
(59)	Filament Choke	32-2038
(60)	Vibrator	32-2039
(61)	Condenser (.5 mfd.)	30-4015
(62)	Vibrator	41-3170D
(63)	Resistor (20 ohms)	33-020133
(64)	Condenser (.05 mfd.)	30-4020
(65)	Power Transformer	32-7550
(66)	Condenser (750 mmfd.)	30-4420
(67)	Filter Choke	32-7545
(68)	Filter Condenser (4-8 mfd.)	30-2150
(69)	Condenser (250 mmfd.)	30-1032
(70)	"B" Choke	32-1281
(71)	Condenser (250 mmfd.)	30-1032
(72)	Choke	32-2053
(73)	Local-Distance Switch	42-1150
(74)	Four Prong Socket	27-6044
(75)	Five Prong Socket	27-6035
(76)	Six Prong Socket	27-6036
(77)	Seven Prong Socket	27-6037
(78)	CB Speaker	36-1203
(79)	Idler Gear	28-7176
(80)	Pinion Gear	28-7178
(81)	Control Assembly	42-5537
(82)	Tuning Control Shaft	28-8405
(83)	Volume Control Shaft	28-8409
(84)	Pilot Lamp Assembly	38-7213
(85)	Tuning and Volume Knob	27-4288

©John F. Rider, Publisher

MODEL 818K
Schematic, Chassis Notes, Parts List

PHILCO RADIO & TELEV. CORP.

For Remote Control Parts List, see Index

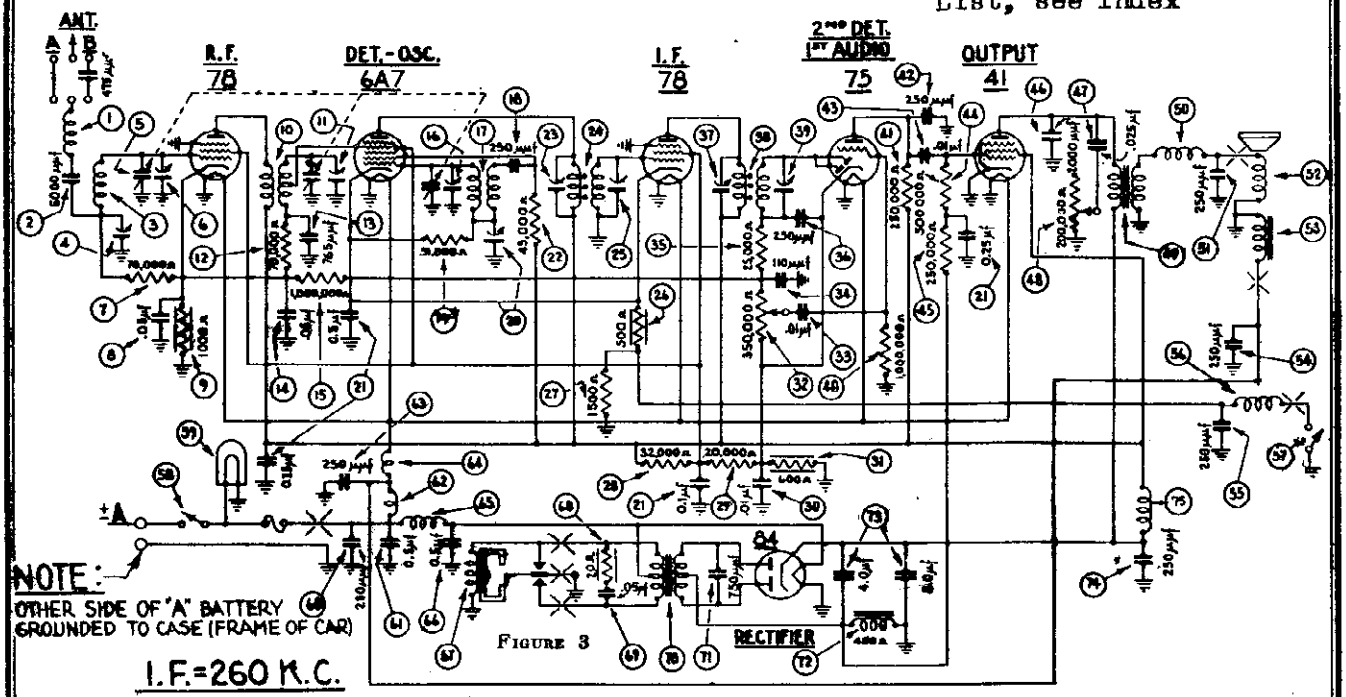

FIGURE 3

I.F.=260 K.C.

NOTE: When the Receiver is installed in a car having a top antenna, under-car antenna, spare wheel antenna or antenna having a similarly low relative capacitance (50 mmf. to 450 mmf.) use connector plug in "A". When the Receiver is installed in a car having a metal insert top antenna, insulated door antenna, insulated trunk cover antenna or antenna having similarly high relative capacitance (450 mmf. to 2500 mmf.) use condenser plug in "B".

No.	Description	Part No.
1	Antenna Choke	38-7516
2	Condenser (6000 mmfd.)	30-4125S
3	Antenna Transformer	32-1984
4	Antenna Coupling Condenser	31-6082
5	Tuning Condenser	31-1769
6	First Padder (on tun. cond.)	
7	Resistor (70,000 ohms)	33-370334
8	Condenser (.05 mfd.)	30-4020
9	Resistor (1000 ohms)	33-3017
10	R. F. Transformer	32-1985
11	Second Padder (on tun. cond.)	
12	Resistor (70,000 ohms)	33-370334
13	Condenser (765 mmfd.)	30-1069
14	Condenser (.05 mfd.)	3615-08G
15	Resistor (1,000,000 ohms)	33-510344
16	Third Padder (on tun. cond.)	
17	Oscillator Transformer	32-1986
18	Condenser (250 mmfd.)	30-1032
19	Resistor (51,000 ohms)	33-351344
20	Low Frequency Padder	31-6083
21	Condenser (.1-.25-.25-.5 mfd.)	30-4415
22	Resistor (45,000 ohms)	33-345344
23	Padder (Pri. 1st I. F. Trans.)	
24	First I. F. Transformer	32-2026
25	Padder (Sec. 1st I. F. Trans.)	
26	Resistor (500 ohms)	33-1213
27	Resistor (1500 ohms)	33-215334
28	Resistor (32,000 ohms)	33-332434
29	Resistor (20,000 ohms)	33-320334
30	Condenser (.01 mfd.)	3903-08G
31	Resistor (600 ohms)	33-1212
32	Volume Control (350,000 ohms)	33-5149
33	Condenser (.01 mfd.)	3903-08U
34	Condenser (110 mmfd.)	30-1031
35	Resistor (25,000 ohms)	33-325344
36	Condenser (250 mmfd.)	30-1032
37	Padder (Pri. 2nd I. F. Trans.)	
38	Second I. F. Transformer	32-2027
39	Padder (Sec. 2nd I. F. Trans.)	
40	Resistor (1,000,000 ohms)	33-510344
41	Resistor (250,000 ohms)	33-424344
42	Condenser (250 mmfd.)	30-1032
43	Condenser (.01 mfd.)	3903-08U
44	Resistor (500,000 ohms)	33-449344
45	Resistor (250,000 ohms)	33-424344
46	Condenser (3000 mmfd.)	30-4177
47	Condenser (.025 mfd.)	7653-08U
48	Tone Control (200,000 ohms)	33-5150
49	Output Transformer	32-7562
50	Choke	32-2038
51	Condenser (250 mmfd.)	30-1032
52	Cone and Voice Coil	36-3159
53	Field Coil Assembly	02705
54	Condenser (250 mmfd.)	30-1032
55	Condenser (250 mmfd.)	30-1032
56	Choke	32-2063
57	Local-Distance Switch	42-1160
58	On and Off Switch	42-1160
59	Pilot Lamp	34-2039
60	Condenser (250 mmfd.)	30-1032
61	Condenser (.5 mfd.)	30-4015
62	"A" Choke	32-1432
63	Condenser (250 mmfd.)	30-1032
64	Filament Choke	32-2038
65	Vibrator Choke	32-2039
66	Condenser (.5 mfd.)	30-4015
67	Vibrator	41-3170D
68	Resistor (20 ohms)	33-020133
69	Condenser (.05 mfd.)	30-4020
70	Power Transformer	32-7550
71	Condenser (750 mmfd.)	30-4420
72	"B" Choke	32-7545P
73	Filter Choke (4-8 mfd.)	30-2150
74	Condenser (250 mmfd.)	30-1032
75	"B" Choke	32-1281
	Four Prong Socket	27-6044
	Five Prong Socket	27-6035
	Six Prong Socket	27-6036
	Seven Prong Socket	27-6037
	Control Assembly	42-5537
	Pilot Lamp Assembly	38-7213
	Tun. and Vol. Knob	27-4288
	Tuning Control Shaft	28-8495
	Volume Control Shaft	28-8499
	Scale Assembly	42-5539
	Distributor Resistor	33-1196
	Intereference Condenser (.5 mfd.)	30-4007
	Condenser Connector	30-4412
	Connector Plug	29-6423
	Fuse	7227
	Fuse Insulator	27-7729
	"Tee" Bolt (Rec. Mtg.)	28-6161
	Nut (Rec. Mtg.)	W518A
	Stud (Speaker Mtg.)	6122

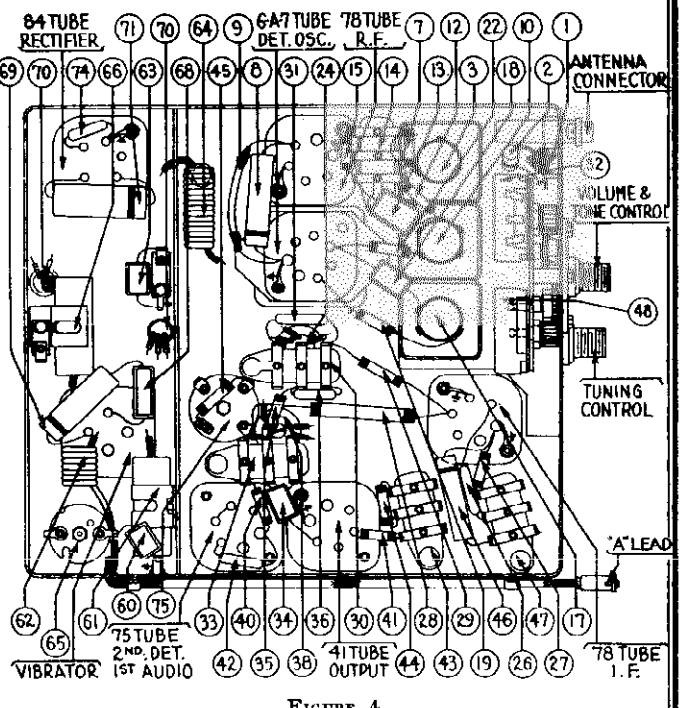

FIGURE 4

No.	Description	Part No.	No.	Description	Part No.
	Nut (Speaker Mtg.)	W55A		Pinion Gear	28-7178
	Idler Gear	28-7176		Complete Speaker A36	36-1206

©John F. Rider, Publisher

MODELS 819,819H
Schematic,Chassis
Notes,Parts List

PHILCO RADIO & TELEV. CORP.

FEBRUARY 15, 1936

MODEL 819-819H RECEIVER

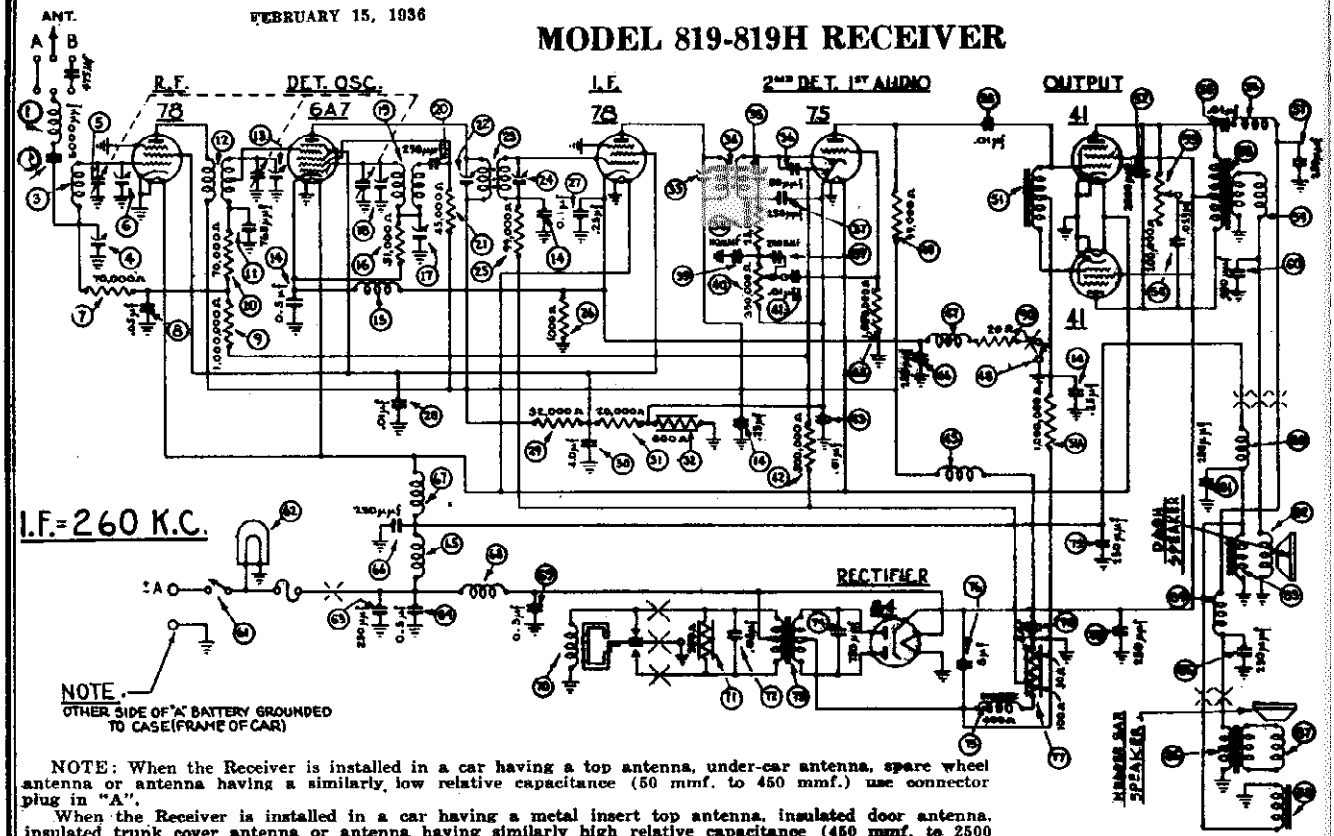

NOTE: When the Receiver is installed in a car having a top antenna, under-car antenna, spare wheel antenna or antenna having a similarly low relative capacitance (50 mmf. to 450 mmf.) use connector plug in "A".

When the Receiver is installed in a car having a metal insert top antenna, insulated door antenna, insulated trunk cover antenna or antenna having similarly high relative capacitance (450 mmf. to 2500 mmf.) use condenser plug in "B".

For Remote Control Parts List, see Index

No.	Description	Part No.
①	Antenna Choke	38-7516
②	Condenser (6000 mmfd.)	30-4125
③	Antenna Transformer	32-1934
④	Antenna Coupling Condenser	31-6082
⑤	Tuning Condenser	31-1769
⑥	First Padder (on tun. cond.)	
⑦	Resistor (70,000 ohms)	33-370334
⑧	Condenser (.05 mfd.)	3615-OSG
⑨	Resistor (1,000,000 ohms)	33-510344
⑩	Resistor (70,000 ohms)	33-370334
⑪	Condenser (765 mmfd.)	30-1069
⑫	R. F. Transformer	32-1985
⑬	Second Padder (on tun. cond.)	
⑭	Condenser (.1-.25-.25-.5 mfd.)	30-4415
⑮	Choke	32-2063
⑯	Resistor (51,000 ohms)	33-351344
⑰	Low Frequency Padder	31-6083
⑱	Third Padder (on tun. cond.)	
⑲	Oscillator Transformer	32-1986
⑳	Condenser (250 mmfd.)	30-1032
㉑	Resistor (45,000 ohms)	33-345344
㉒	Padder (Pri. 1st I. F. Trans.)	
㉓	First I. F. Transformer	32-2050
㉔	Padder (Sec. 1st I. F. Trans.)	
㉕	Resistor (99,000 ohms)	33-399344
㉖	Resistor (1,000 ohms)	33-210334
㉗	Condenser (.25 mfd.)	30-4146
㉘	Condenser (.01 mfd.)	30-4124
㉙	Resistor (32,000 ohms)	33-332434
㉚	Condenser (4 mfd.)	30-2151
㉛	Resistor (20,000 ohms)	33-320334
㉜	Resistor (600 ohms)	33-1212
㉝	Padder (Pri. 2nd I. F. Trans.)	
㉞	Second I. F. Transformer	32-2034
㉟	Padder (Sec. 2nd I. F. Trans.)	
㊱	Condenser (50 mmfd.)	30-1029
㊲	Condenser (250 mmfd.)	30-1032
㊳	Resistor (25,000 ohms)	33-325344
㊴	Condenser (110 mmfd.)	30-1031
㊵	Volume Control (350,000 ohms)	33-5149
㊶	Condenser (.01 mfd.)	3903-OSU
㊷	Resistor (500,000 ohms)	33-449344
㊸	Condenser (.01 mfd.)	3903-OSG
㊹	Resistor (1,000,000 ohms)	33-510344
㊺	"B" Choke	32-1281
㊻	Condenser (250 mmfd.)	30-1032
㊼	Choke	32-2063
㊽	Local-Distance Switch	42-1160
㊾	Resistor (99,000 ohms)	33-399344
㊿	Condenser (.01 mfd.)	3903-OSU
(51)	Audio Choke	32-7547
(52)	Resistor (1,000,000 ohms)	33-510344
(53)	Condenser (2000 mmfd.)	30-4177
(54)	Tone Control (200,000 ohms)	33-5150
(55)	Condenser (.025 mfd.)	7653-OSU
(56)	Condenser (.01 mfd.)	30-4381
(57)	Choke	32-1930
(58)	Condenser (250 mmfd.)	30-1032
(59)	Output Transformer	32-7551
(60)	Choke	32-1930
(61)	Condenser (250 mmfd.)	30-1032
(62)	On-Off Switch Assembly	42-1160
(63)	Pilot Lamp	34-2039
(64)	Condenser (250 mmfd.)	30-1032
(65)	Condenser (.5 mfd.)	30-4015
(66)	"A" Choke	32-1432
(67)	Condenser (250 mmfd.)	30-1032
(68)	Filament Choke	32-2038
(69)	Vibrator Choke	32-2039
(70)	Condenser (.5 mfd.)	30-4015
(71)	Vibrator	41-3170D
(72)	Resistor (200 ohms)	33-1210
(73)	Condenser (.05 mfd.)	30-4020
(74)	Power Transformer	32-7550
(75)	Condenser (750 mmfd.)	30-4420
(76)	Filter Choke	32-7545
(77)	Filter Condenser (8-8 mfd.)	30-2152
(78)	Resistor (100-50 ohms)	33-3233
(79)	Condenser (250 mmfd.)	30-1032
(80)	Condenser (250 mmfd.)	30-1032
(81)	Choke	32-1644
(82)	Condenser (250 mmfd.)	30-1032
(83)	Cone and Voice Coil	36-3158
(84)	Field Coil Assembly	36-3513
(85)	Choke	32-2038
(86)	Condenser (250 mmfd.)	30-1032
(87)	Output Transformer (overhead speaker)	32-7507
(88)	Cone and Voice Coil (overhead speaker)	36-3526
(89)	Field Coil Assembly (Overhead Speaker)	32-9236
(90)	Condenser (250 mmfd.)	30-1032
(91)	Resistor (20 ohms)	33-020133
	Four Prong Socket	27-6044
	Five Prong Socket	27-6035
	Six Prong Socket	27-6036
	Seven Prong Socket	27-6037
	Idler Gear	28-7178

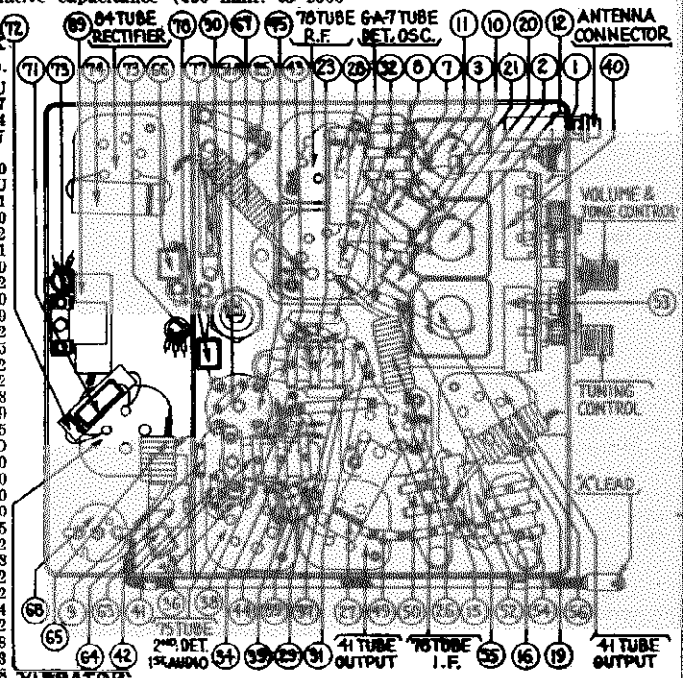

FIGURE 2

No.	Description	Part No.
	Pinion Gear	28-7178
	Dash Speaker Complete (A37)	36-1207
	Dash Speaker Only	36-1212
	Overhead Speaker (AD)	36-1211
	Control	42-5537
	Pilot Lamp Assembly	38-7213
	Tuning and Volume Knob	27-4288
	Tuning Shaft	28-8495
	Volume Shaft	28-8499
	Scale Assembly	42-5539
	Distributor Resistor	33-1196
	Interference Condenser (.5 mfd.)	30-4007
	Condenser Connector	30-4412
	Connector Plug	29-6428
	Fuse	7227
	Fuse Insulator	27-7729
	"Tee" Bolt (Rec. Mtg.)	28-6161
	Nut (Rec. Mtg.)	W518A
	Stud (Speaker Mtg.)	6122
	Nut (Speaker Mtg.)	W65A

©John F. Rider, Publisher

MODELS 819,819H
Socket,Trimmers
Alignment

PHILCO RADIO & TELEV. CORP.

I. F. TRANSFORMERS AND PADDERS

The I. F. transformers are assembled complete with padding condensers.

Both the primary and the secondary padders are placed side by side in the top of the transformer shield can. The adjusting screws are accessible thru the holes in the top of the shield. (See Figure 4).

The coil windings terminate in leads instead of terminals or lugs. The color scheme of the leads is given in Figure 3.

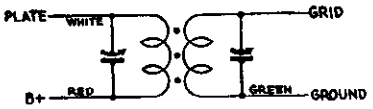

FIGURE 3

If replacements are ever necessary, replace the entire coil assembly, 32-2050 for the first I. F. stage and 32-2034 for the second I. F. stage. Neither the coil nor the padders will be furnished separately. Order only by the above numbers.

MODEL 819-819H ADJUSTMENTS

All padding adjustments are carefully made at the factory and ordinarily no readjustments are necessary. However, when readjustments are required, the procedure given below must be followed in detail.

Equipment

Fully charged heavy duty storage battery or 6-volt power pack, 048A Philco Set Tester, 3164 Padding wrench, 27-7159 Padding screw driver.

General

OUPTUT METER—The output meter must be connected by means of an adapter to the plate of the type 41 output tube and to the Receiver chassis.

SIGNAL GENERATOR—With the Receiver and signal generator set up for operation at the prescribed frequency, turn the Receiver volume control on full and set the signal generator attenuator so that a half scale reading is obtained on the output meter. The signal in the speaker should be audible but not loud.

The shielding on the signal generator output lead must be connected to the Receiver housing.

Procedure

I. F.—Set the signal generator at exactly 260 K. C. Connect the generator lead to the grid cap of the 78 I. F. tube (without removing the grid cap) in series with a .1 mfd. condenser.

Adjust the secondary screw padder (58) on the second I. F. transformer for maximum reading on the output meter. Then adjust the primary screw padder (33) for maximum reading. (See Figure 4 for location of padders).

Remove the generator lead from the 78 tube.

Connect the generator lead to the grid cap of the 6A7 tube in series with a .1 mfd. condenser (without removing the grid cap). Adjust the secondary screw padder (24) on the first I. F. transformer for maximum reading on the output meter. Then adjust the primary screw padder (22) for maximum reading. (See Figure 4 for location of padders).

HIGH FREQUENCY AND R. F.—After padding the first I. F. stage remove the generator lead from the 6A7 tube.

Set the signal generator at 1550 K. C. and then connect the generator lead to the grid cap of the 78 R. F. tube in series with a .1 mfd. condenser (without removing the grid cap).

Turn the tuning condenser plates out of mesh as far as they will go. With the tuning condenser in this position, adjust the high frequency padder (18) and the R. F. padder (13) until the maximum reading is obtained on the output meter. This is the true setting for 1550 K. C., 155 on the dial scale.

LOW FREQUENCY—Turn the tuning condenser plates in mesh to approximately 580 K. C., 58 on the dial scale and set the signal generator at 580 K. C. Roll the tuning condenser and adjust the low frequency padder screw (17) for maximum reading on the output meter.

HIGH FREQUENCY RE-ADJUSTMENT—Turn the tuning condenser plates out of mesh as far as they will go and set the signal generator at 1550 K. C. Then adjust the high frequency padder (18) again for maximum reading on the output meter.

Remove the generator lead from the 78 RF tube.

ANTENNA—Connect the generator lead to the antenna cable assembly (made up of Part No. L1915 loom, 1-27-7133 terminal and 40 inches of 16 strand No. 30 wire), using a 200 mmfd. condenser in series between the two leads. Place the connector plug in the antenna socket on the Receiver. Plug the cable into the antenna socket.

Turn the tuning condenser in mesh to 580 K. C., and adjust the signal generator at 580 K. C. Adjust the Antenna coupling condenser (4) for maximum reading.

Turn the tuning condenser to 1400 K. C. and set the generator at 1400 K.C. Adjust the padders (13) and (6) for the maximum reading on the output meter.

When the antenna stage adjustment is made with the Receiver installed in the car, the Receiver antenna lead must be connected to the car antenna in the usual manner. The signal generator output lead should be connected to a wire placed near the car antenna but not connected to it.

When installing the radio in a car, follow the installation instructions carefully. The correct connector must be used in the antenna lead connector in the Receiver and the antenna coupling condenser must be adjusted to the car antenna.

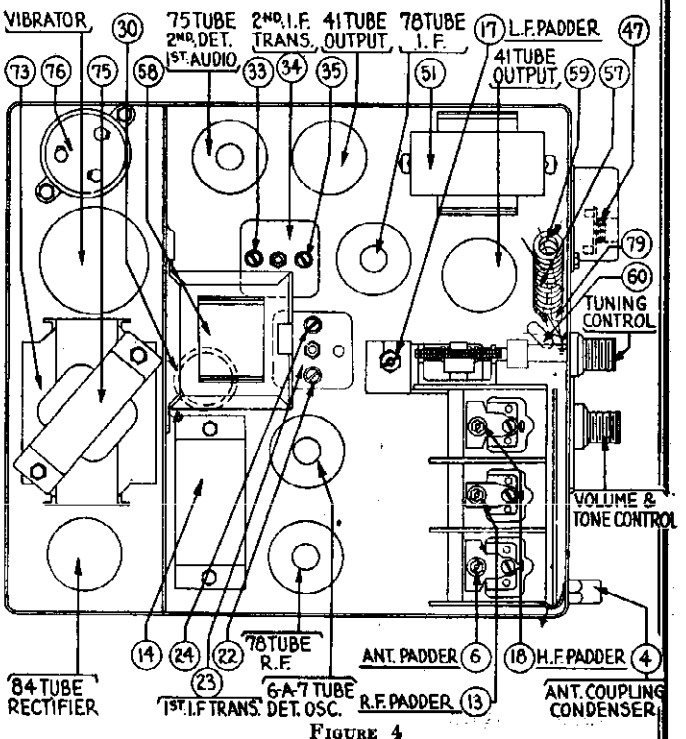

FIGURE 4

©John F. Rider, Publisher

PHILCO RADIO & TELEV. CORP.

MODELS 816,817,818
818K,819
Remote Controls
Parts List,Part 1

MODEL 816 - 817 - 818 - 818K - 819 CONTROLS

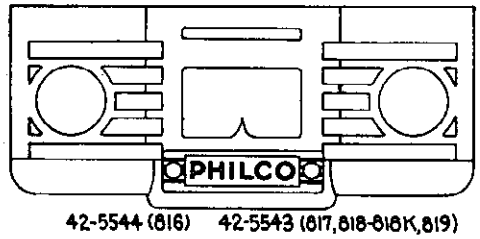

42-5544 (816) 42-5543 (817,818-818K,819)

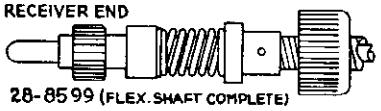

28-8599 (FLEX. SHAFT COMPLETE)

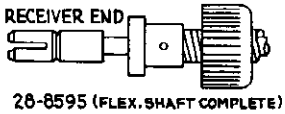

28-8595 (FLEX. SHAFT COMPLETE)

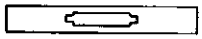

27-8197 (BLACK)
27-8205 (RED)

28-8610

W-1611

28-2043

28-8496

27-4314 CHEVROLET-BUICK-816-817-818-818K-819 (BLACK)
27-4333 PONTIAC (ORANGE)

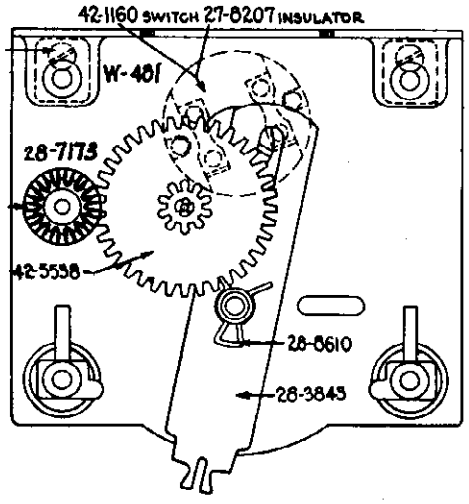

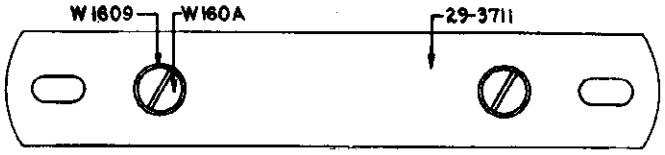

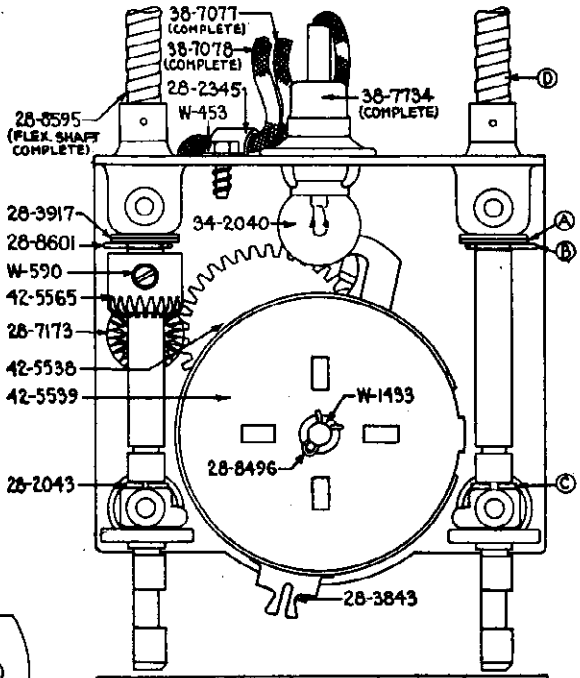

MODELS	A	B	C	D
816-817	28-3917	28-8601	28-2043	28-8595
818-818K-819	NONE USED	NONE USED	NONE USED	28-8599

PARTS LIST AND PRICES

(Prices Subject to Change Without Notice)

PART NUMBER	DESCRIPTION	LIST PRICE
L-1626	Lug	$ .01
L-1833	Lug	per 100 .30
W160A	Screw	per 100 .25
W291	Lockwasher	per 100 .40
W453	P. K. Screw	per 100 1.80
W481	Screw	per 100 2.00
W495	Washer	per 100 .25
W590	Screw	per 100 2.00
W684A	Nut	per 100 1.25
W1433	Washer	per 100 .15
W1583	Screw	per 100 .75
W1609	Lockwasher	per 100 .50
W1611	Screw	per 100 .25
4436	Washer	per 100 1.50
27-4288	Knob	.15
27-4299	Knob	.20
27-4314	Knob	.04
27-4333	Knob	.10
27-7132	Insulator	per 100 .40
27-7133	Ferule	.01
27-7242	Sleeve	per 100 .40
27-8197	Light Shield	.03
27-8205	Light Shield	per 100 .50
27-8207	Insulator	per 100 .50
28-1269	Fuse Housing	.01
28-2043	Washer	per 100 .25
28-2345	Clamp	per 100 .52
28-2670	Prong	per 100 .75
28-3688	Bezel Plate	.45
28-3689	Bezel Plate	.45
28-3692	Bezel Plate	.45
28-3698	Knob Base	.04
28-3843	Switch Lever	.05
28-3844	Switch Lever	.10
28-3917	Washer	per 100 .40
28-7173	Meter Gear	.10
28-8496	Spring	.05
28-8595	Flexible Shaft	*
28-8599	Flexible Shaft	*
28-8601	Spring	.04
28-8610	Spring	.03
29-3711	Bracket	.03
29-8009	Spring	per 100 .50
34-2040	Pilot Lamp	.14
38-7077	Fuse Lead Assembly	.15
38-7078	Ammeter Lead Assembly	.15
38-7602	Tone Control Lead	.10
38-7734	Pilot Lamp Assembly	.35
42-1159	On and Off Switch	.25
42-1160	On and Off Switch	.25
42-5534	Control Assembly (816)	6.75
42-5536	Control Assembly (817)	7.50
42-5537	Control Assembly (818-818K-819)	7.50
42-5538	Intermediate Gear Assembly	.15
42-5539	Scale Assembly	.50
42-5540	Scale Assembly	.50
42-5543	Cover Assembly	1.10
42-5544	Cover Assembly	.65
42-5548	Cover Assembly	.65
42-5561	Control Assembly (816-817 Buick), (816-817 Chevrolet)	6.75
42-5562	Control Assembly (816-817 Pontiac)	6.75
42-5565	Miter Gear Assembly	.15
42-5570	Scale Assembly	.50
42-5580	Control Assembly (818-818K-819 Buick), (818-818K-819 Chevrolet)	6.75
42-5582	Control Assembly (818-818K-819 Pontiac)	6.75

*Prices not available at this time.

©John F. Rider, Publisher

MODELS 816,817,818
818K,819
Remote Controls
Parts List,Part 2

PHILCO RADIO & TELEV. CORP.

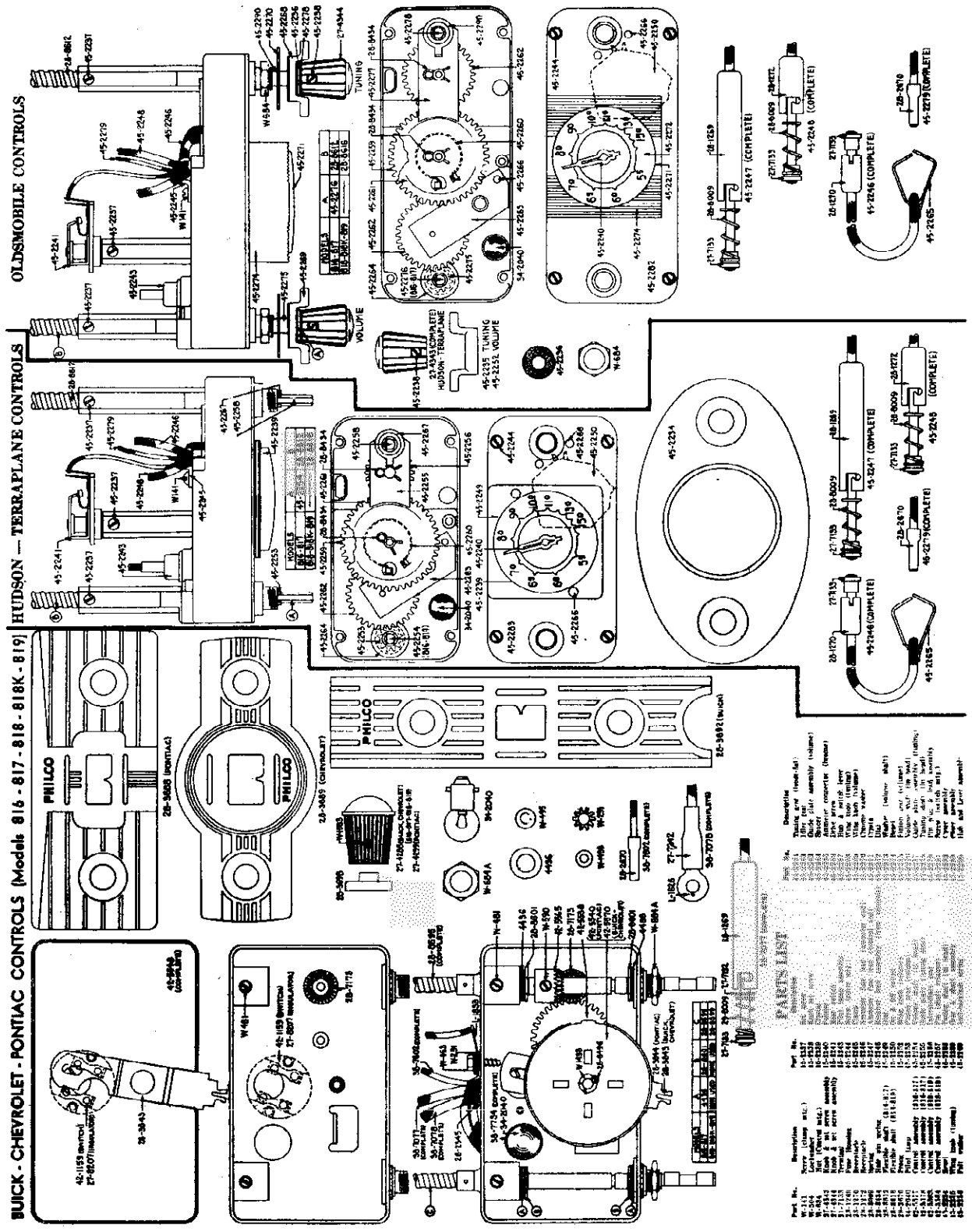

©John F. Rider, Publisher

PHILCO RADIO & TELEV. CORP. MODEL 37-675
Codes 121,122
Trimmers, Alignmen

Alignment of the Compensators

To accurately adjust this receiver precision test equipment is necessary. The locations of the various compensators are shown in Figs. 5 and 6.

NOTE—The receiver should be allowed to heat for at least 15 minutes before adjusting the compensators.

OUTPUT METER

The 025 Output Meter is connected to the plate and cathode terminals of the 6F6G driver tube. Adjust the meter to use the (0-30) Volt Scale.

INTERMEDIATE FREQUENCY CIRCUIT

Frequency 470 K. C.

IMPORTANT — Before adjusting the compensators, calibrate tuning dial as given on Page 1.

1. Connect the 088 Signal Generator output lead in series with a .1 mfd. condenser to the grid of the 6K7G tube, 2nd I.F., and the ground connection of the output lead to the chassis.
2. Set the receiver volume control in the maximum position; tone control counter-clockwise; Magnetic Tuning Switch "Off" (counter-clockwise); range switch in position No. 1 (Broadcast); bass compensation switch on first tap from "off" position, and the receiver dial to approximately 580 K. C. Adjust the signal generator for 470 K. C.
3. Now adjust compensator (84P) for maximum output.
4. Remove the signal generator output lead with the .1 mfd. condenser from the 6K7G 2nd I.F. grid and connect them to the 6K7G, 1st I.F. grid.
5. Turn compensator (69T) clockwise until it is tight, then adjust compensators (68) and (69S) for maximum output. Now adjust compensator (69T) for maximum output. Caution: Do not adjust compensators (68) and (69S) unless compensator (69T) is turned to the extreme clockwise position.
6. Remove the signal generator output lead and condenser from the 6K7G, 1st I.F. tube and connect them to the grid of the 6L7G tube, 1st detector, and adjust compensators (64P) and (64S) for maximum output.

RADIO FREQUENCY CIRCUIT

Tuning Range 11.5-18.2 M. C.

1. The signal generator output lead with the .1 mfd. condenser, is connected to terminal No. 1 on the aerial input panel (rear of chassis) and the generator ground lead to terminal No. 3. Terminals 2 and 3 must be connected with the shorting link provided on the panel.
2. Set the magnetic tuning control in the "off" position. Set the range switch in position No. 5 (11.5 to 18.2 M. C.). Turn the receiver and signal generator dials to 18 M. C. and adjust the generator attenuator for a readable indication on the output meter. Now adjust compensator (44D) by turning the screw (clockwise) to the maximum capacity position, then slowly turn it counter-clockwise until a second maximum peak is reached on the output meter. The first peak from maximum capacity is the image signal and the receiver *must not* be adjusted to this signal. On some receivers, however, only one peak will be found, therefore, adjust compensator (44D) to this peak. If the above procedure is correctly performed, the image signal will be found at 17.06 M. C. by advancing the signal generator input, and turning the receiver dial to this frequency mark on the scale.
3. Leaving the signal generator and receiver dials at 18 M. C. the antenna and R. F. compensators (7D) and (25D) are now adjusted by connecting a variable condenser (Philco Part No. 45-2325) across the oscillator compensator (44D) contact (first contact from the left side of the receiver facing rear underside view of the chassis) and ground. Now tune the added condenser until the second harmonic of the receiver oscillator beats against the signal from the generator, resulting in a maximum indication on the output meter. Note: it may be necessary to increase the signal generator output to obtain a signal of sufficient strength for reading on the output meter. Compensators (7D) and (25D) are now adjusted for maximum output. After these adjustments, remove the external condenser and readjust compensator (44D) as given in paragraph 2 above.
4. Turn the signal generator and receiver dials to 12 M. C. and adjust compensators (44E), (25E) and (7E) for maximum output.
5. Readjust compensator (44D) as given in paragraph 2 above, for maximum output.
6. Readjust compensators (7D), (25D) and (44D) as given in paragraph 3 above. This readjustment is to correct any variation that the low frequency compensator may have caused in the high end of this range.

Tuning Range (7.35-11.6 M. C.)

1. Turn selector switch to Range 4. Set the signal generator and receiver dials to 11.0 M. C. Now adjust compensator (44B) for maximum output. Check for image at 10.06 M. C.
2. Leaving signal generator and receiver dial turned to 11.0 M. C., connect the external variable condenser across the oscillator compensator (44B) contact (third contact from left side of the receiver facing rear underside view of chassis) and ground. Tune the added condenser for maximum output, then adjust compensators (7B) and (25B) for maximum output. Remove the added condenser and adjust (44B) for maximum.
3. Turn the signal generator and receiver dials to 7.5 M. C. and adjust compensators (44C), (25C) and (7C) for maximum output.
4. Readjust compensator (44B) as given in paragraph 1 above.
5. Readjust compensators (7B), (25B) and (44B) as given in paragraph 2 above.

Tuning Range (4.7 to 7.4 M. C.)

1. Turn selector switch to range 3. Set the signal generator and receiver dials for 7.0 M. C. and adjust compensators (44), (25) and (7) for maximum output.
2. Rotate the signal generators and receiver dials to 5.0 M. C., then adjust compensators (44A), (25A) and (7A) for maximum output.
3. Readjust compensators (44), (25) and (7) on the 7.0 M. C. signal.

Tuning Range (1.58 to 4.75 M. C.)

1. Turn the selector switch to range 2. Set the signal generator and receiver dials to 4.5 M. C. Now adjust compensators (42B), (24A) and (6A) for maximum output.
2. Rotate the signal generator and receiver dials to 1.7 M. C. Compensator (42C) Osc. series is now adjusted for maximum output as follows: First tune compensator (42C) for maximum output, then vary the tuning condenser of the receiver for maximum output about the 1.7 M. C. dial mark. Now turn compensator (42C) slightly to the right or left and vary the receiver tuning condenser for maximum output. If the output reading increases, turn compensator (42C) in the same direction a trifle more, and again vary the tuning condenser for maximum output. If the output decreases, set the compensator in the opposite direction. This procedure of first setting the compensator and then varying the tuning condenser is continued until there is no further gain in output reading.
3. Readjust compensators (42B), (24A) and (6A) for maximum output as given in paragraph 1 above.

Tuning Range (530 to 1600 K. C.)

1. Set selector switch in range 1. Rotate the signal generator and receiver dial to 1500 K. C. Adjust compensators (42), (24) and (6) for maximum output.
2. Turn the signal generator and receiver dials to 580 K. C. Compensator (42A) Osc. series is now adjusted, using the same procedure as given in paragraph 2 under Tuning Range (1.58 to 4.75 M. C.). The only difference in the two adjustments is the frequency and compensator used.
3. Readjust compensator (42), on 1500 K. C. and compensators (24) and (6) on a 1400 K. C. signal.

ADJUSTMENT OF THE MAGNETIC TUNING CONTROL

1. Leaving the selector switch in position 1. Set the Magnetic tuning switch in the "out" position. Turn the signal generator and dial to 1000 K. C., then adjust the receiver dial for maximum output.

NOTE: It is very important to accurately adjust the receiver tuning condenser for peak output, also, adjust the signal generator attenuator to maximum output position.

2. Turn the (Magnetic Tuning Control) to the "on" position (clockwise). Compensator (84S) Sec. of magnetic tuning transformer is now adjusted for maximum output. If the indicator of the output meter goes off scale, turn the volume control of the receiver toward the miminum position until a readable indication is obtained.
3. The above adjustment is now checked for accuracy, by turning the magnetic tuning control "off". When this is done there should be no change in the tone of the received signal. If a change of tone or hiss develops, it indicates a shift in frequency and the adjustment must be made again.

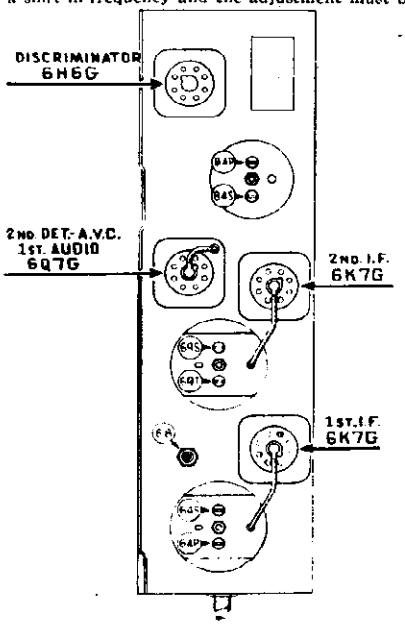

Fig. 5—Locations of I.F. Compensators Top of I.F. Unit

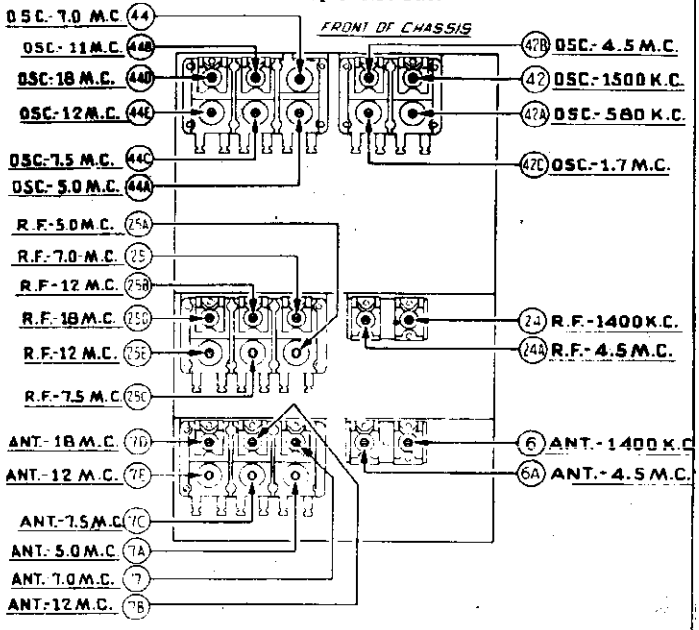

Fig. 6 - Locations of R.F. Compensators Underside of Chassis View

©John F. Rider, Publisher

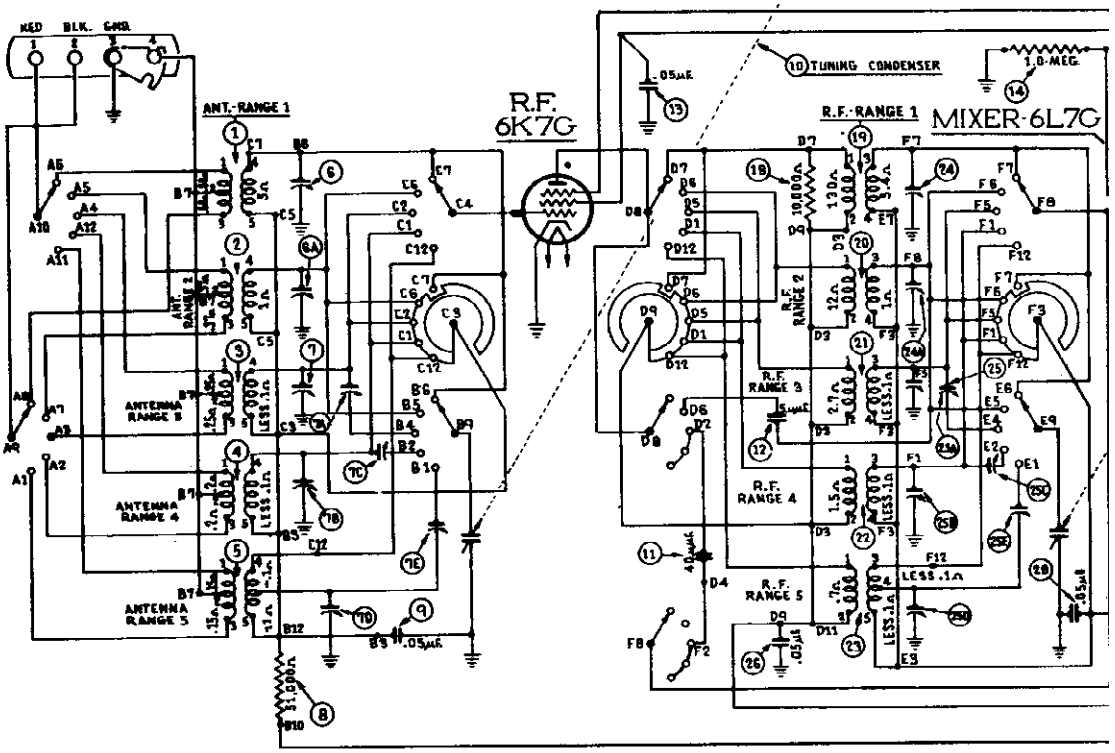

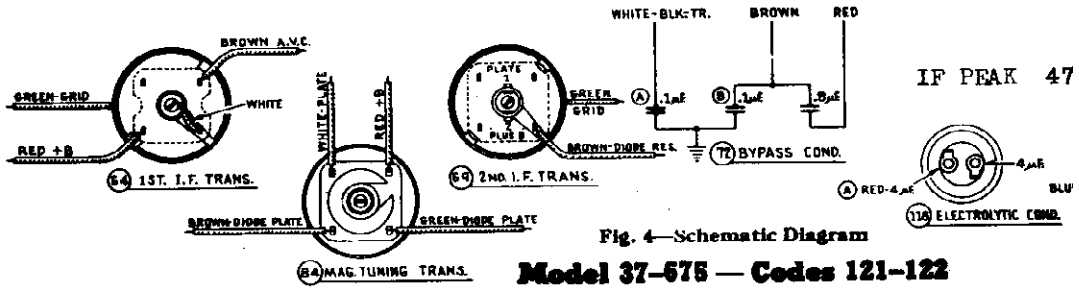

Fig. 4—Schematic Diagram

Model 37-575 — Codes 121-122

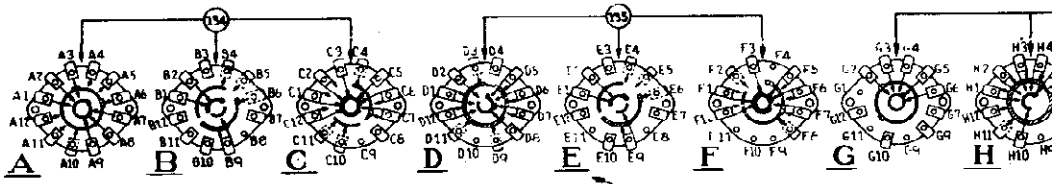

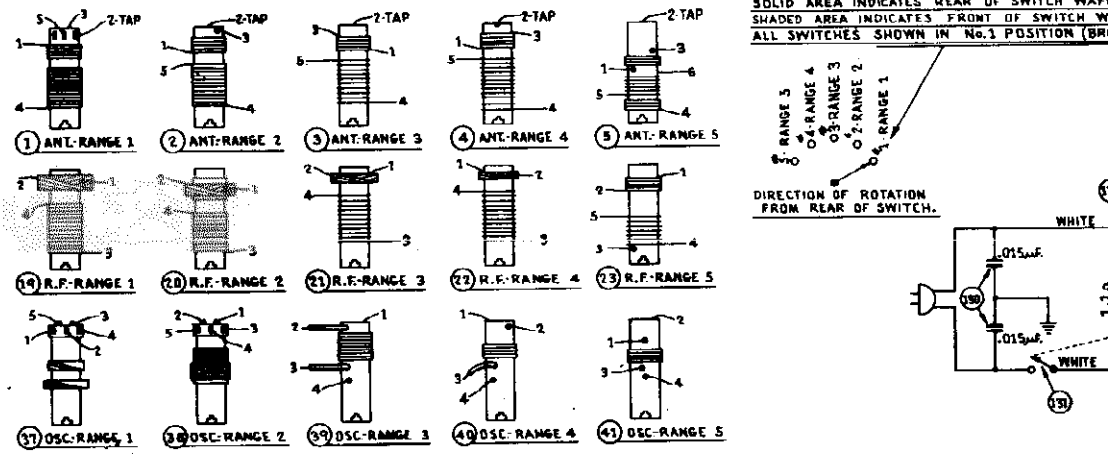

©John F. Rider, Publisher

O & TELEV. CORP.

MODEL 37-675(Codes 121,122)
Schematic, Coil & Switch Data

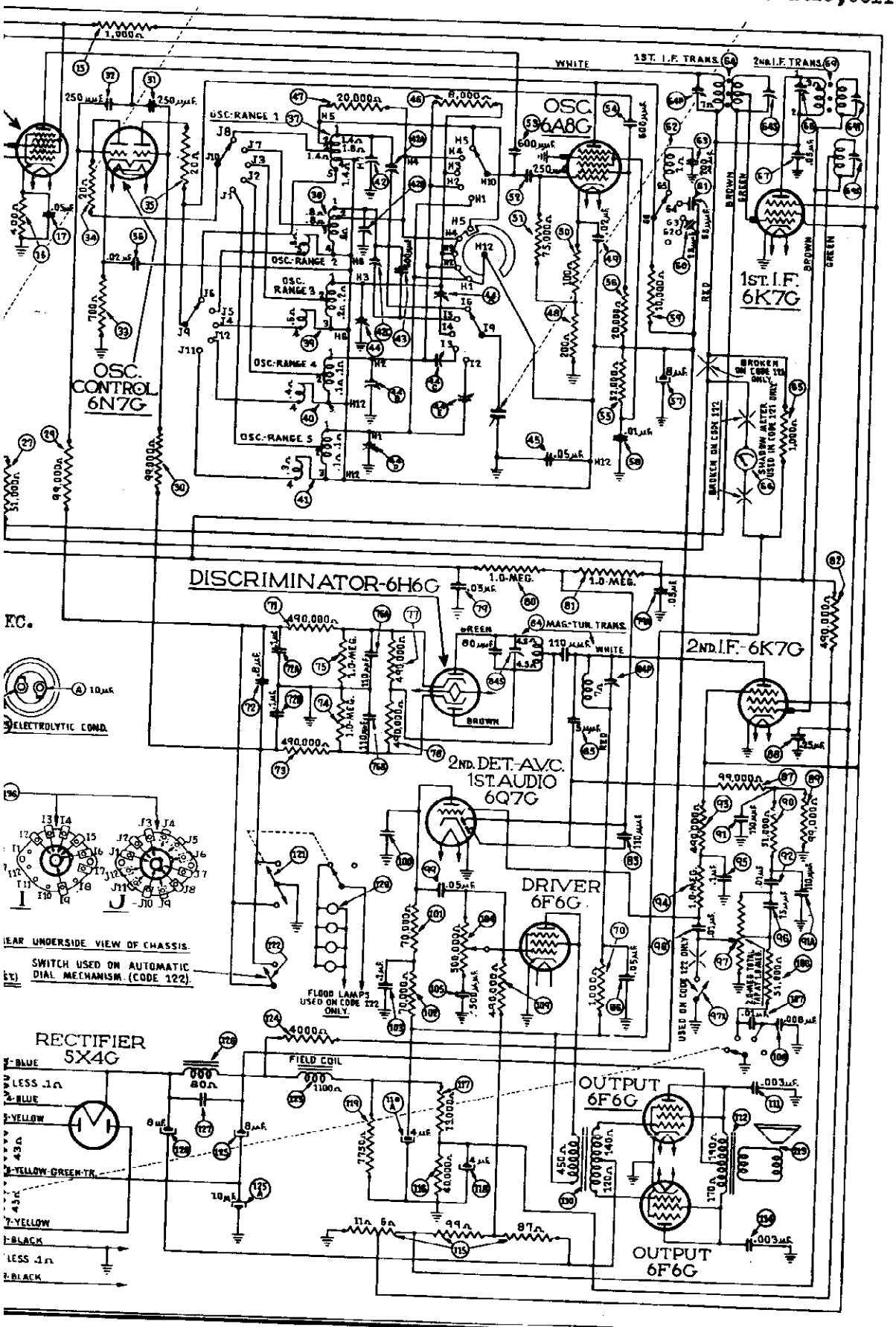

MODEL 37-675
Codes 121,122
Chassis Views

PHILCO RADIO & TELEV. CORP.

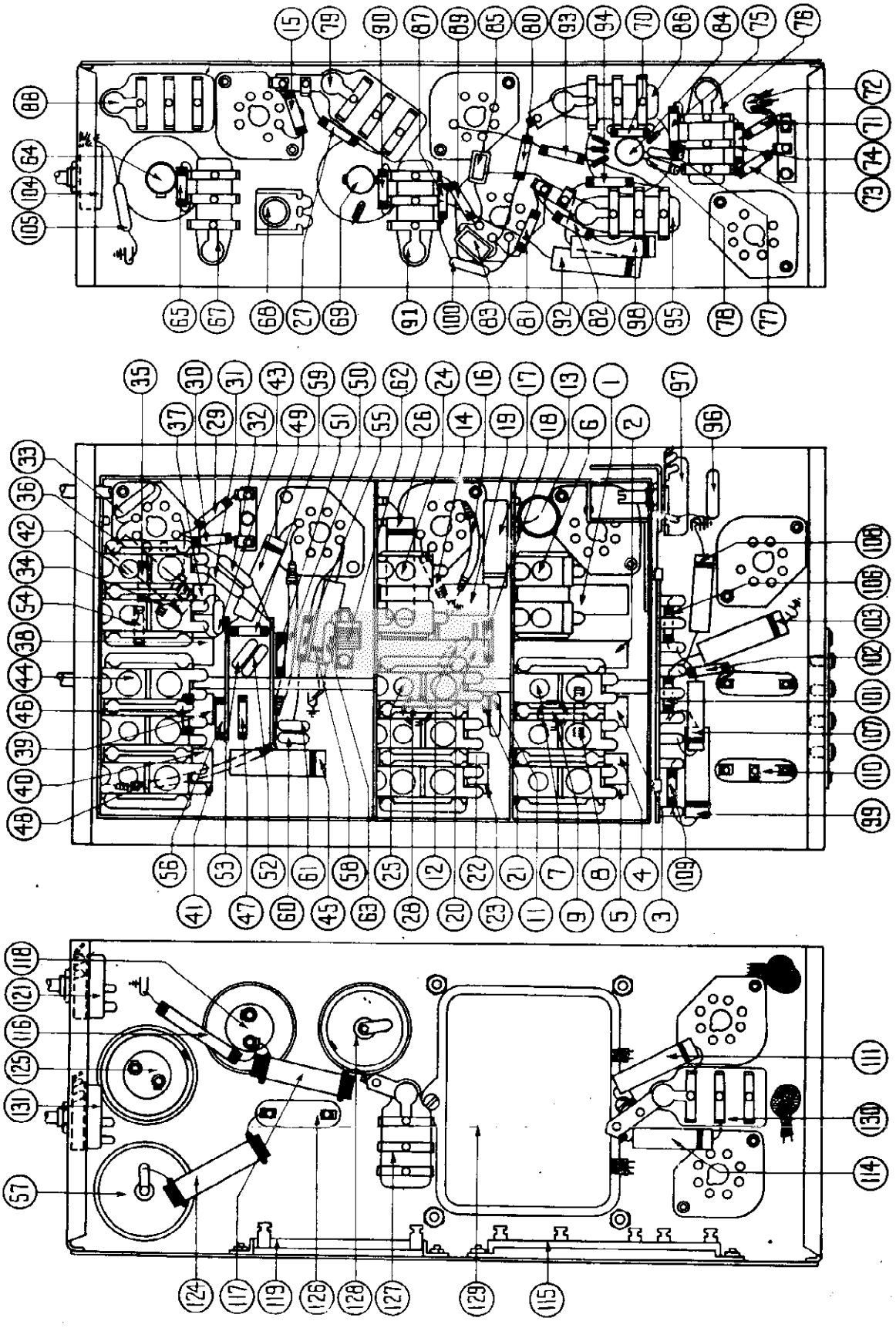

Fig. 3—Parts locations. Underside of Chassis

PHILCO RADIO & TELEV. CORP.

MODEL 37-675
Codes 121,122
Voltage, Speaker
Adjustments

Electrical Specifications

Type of Circuit: Superheterodyne with Magnetic Tuning; Spread-band dial; Philco Foreign Tuning System, and a class "A" Audio Output Circuit. Code 122 receiver has the Philco Automatic Dial tuning system.

Power Supply: 115 Volts A.C. 50 to 60 cycles or 25 to 40 cycle. Power transformer Part Numbers for the different voltage and frequency ranges are listed on Page 5.

Power Consumption: 155 Watts.

Intermediate Frequency: 470 K.C

Undistorted Output: 10 Watts. **Speaker:** U-15.

Tuning Ranges: Five—Range 1—530 to 1600 K.C.; Range 2—1.58 to 4.75 M.C.; Range 3—4.7 to 7.4 M.C.; Range 4—7.35 to 11.6 M.C.; Range 5—11.5 to 18.2 M.C.

Aerial Connections

To obtain the full advantage of the sensitivity of this receiver the Philco High Efficiency Aerial supplied with the receiver must be used. The connections for the aerial are as follows:

The red and black leads of the High-Efficiency Aerial "transmission line" are connected to terminals 1 and 2 respectively, of the terminal panel provided on the rear of the chassis. Connect the jumper on the terminal panel across terminals 3 and 4.

If a temporary aerial is used, the jumper should be across terminals 2 and 3. The aerial connects to terminal 1 and the ground lead to terminal 3. A good ground connection is desirable in all installations.

DIAL CALIBRATION

In order to adjust this receiver correctly the dial must be aligned to track properly with the tuning condenser. To do this proceed as follows:

1. Loosen the set screws on the shaft coupling of the tuning condenser. Then turn the tuning condenser until the plates are in the maximum capacity position. Now set the glowing beam indicator on the index line at the low frequency end of the broadcast band. With dial and tuning condenser in this position tighten set screws.

2. Turn the tuning condenser control until the indicator is on the first division from the index line.

3. With the dial in this position, loosen the shaft coupling set screws. Then turn the dial until the indicator is again on the index line. Tighten the set screws in this position.

NOTE: Be careful when turning the dial that the position of the tuning condenser is not disturbed.

REPLACING AUTOMATIC DIAL CONTROL SCREWS
Code 122

See Bulletin 258 for the procedure on removal of the Automatic Dial Control screws.

REPLACING THE DIAL OR MASK ARM ASSEMBLY
Code 122

To replace the dial or mask arm assembly, remove the chassis from the cabinet. Then remove the dial tuning knobs. Take off the control handle cover by removing the three screws holding it to the handle hub. When the metal cover is removed, two screws will be noted holding the control handle to the rotary hub. Remove the screws and detach the handle.

Now remove the five screws holding the dial escutcheon plate to the dial body and lift the escutcheon from the dial body. With these parts removed, the dial may be detached.

MASK ASSEMBLY—Code 122

With the dial removed, two fibre rings and one metal ring will be found around the outer side of the dial housing. Take off these rings and slip the mask from the housing.

SHADOWMETER ADJUSTMENT—Code 121

Remove aerial and allow tubes to warm up. Then adjust shadow meter as follows:

1. Move the shadow meter coil backwards and forwards, until the opposite edges of the shadow are $\frac{1}{8}$ of an inch from end of the shadow screen, measuring along the bottom edge of the screen. Adjustment of the shadow meter light bracket may be necessary for perfect centering.

2. Remove the rectifier tube from its socket, and rotate coil until shadow reaches minimum width. This width must not exceed $\frac{3}{32}$ of an inch.

3. Replace the 5X4G rectifier tube in its socket. The shadow should then widen to not more than $\frac{3}{16}$ inch or less than $\frac{1}{16}$ inch from each side of the screen measuring along the bottom edge. If these limits are not obtained readjust the shadow meter as given in paragraphs 1 and 2 until they are reached.

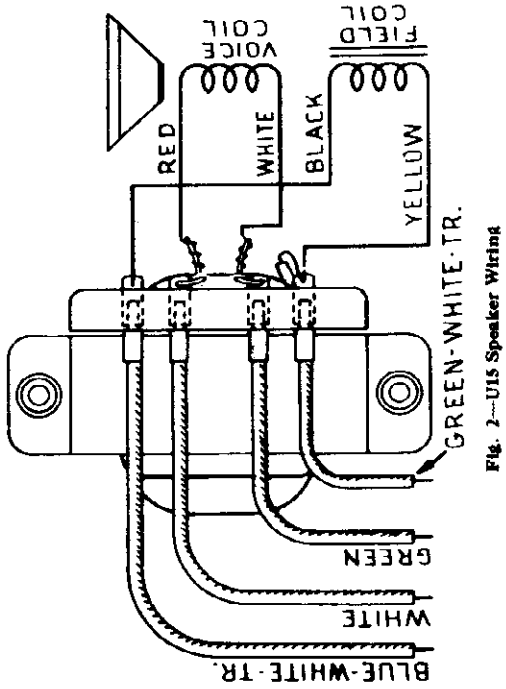

Fig. 2—U15 Speaker Wiring

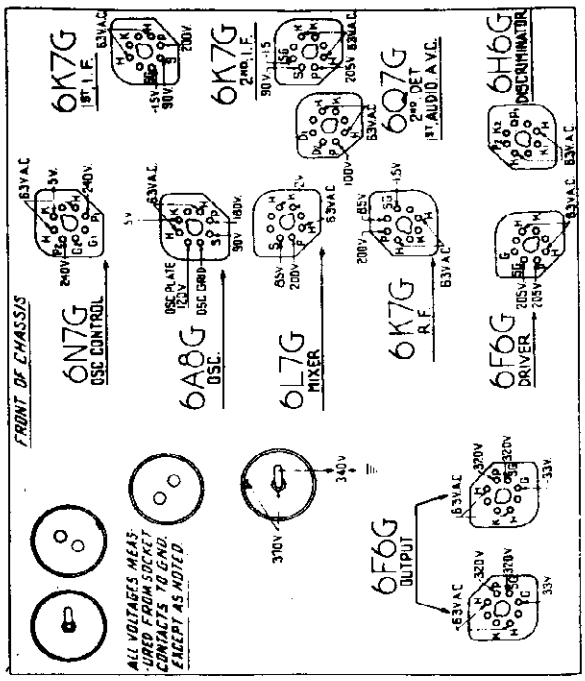

Fig. 1—Socket Voltages, Measured from Underside of Chassis

The voltages indicated by the arrows were measured with a voltmeter having a resistance of 1000 ohms per volt. Volume Control at minimum, range switch in broadcast position, line voltage 115 A.C.

©John F. Rider, Publisher

MODEL 37-675
Codes 121,122
Parts List

PHILCO RADIO & TELEV. CORP.

Replacement Parts—Model 37-675—Codes 121-122

Schem. No.	Description	Part No.	List Price
1	Antenna Transformer (Range 1)	32-2106	$0.80
2	Antenna Transformer (Range 2)	32-2146	.80
3	Antenna Transformer (Range 3)	32-2183	.60
4	Antenna Transformer (Range 4)	32-2185	.70
5	Antenna Transformer (Range 5)	32-2175	.80
6	Compensator (2 sections)	31-6093	.40
7	Compensator (6 sections)	31-6112	1.40
8	Resistor (51000 ohms, ½ watt)	33-351339	.20
9	Condenser (.05 mfd. tubular)	30-4020	.20
10	Tuning Condenser	31-1892	3.75
11	Condenser (40 mmfd. mica)	30-1076	.20
12	Condenser (5 mmfd. mica)	30-1077	.20
13	Condenser (.05 mfd. tubular)	30-4123	.20
14	Resistor (1 megohm ½ watt)	33-510339	.20
15	Resistor (1000 ohms ½ watt)	33-210339	.20
16	Resistor (400 ohms wirewound)	33-3016	.20
17	Condenser (.05 mfd. tubular)	30-4444	.20
18	Resistor (10000 ohms ½ watt)	33-310339	.20
19	R. F. Transformer (Range 1)	32-2105	.75
20	R. F. Transformer (Range 2)	32-2147	.60
21	R. F. Transformer (Range 3)	32-2177	.60
22	R. F. Transformer (Range 4)	32-2178	.60
23	R. F. Transformer (Range 5)	32-2176	.70
24	Compensator (2 sections)	31-6093	.40
25	Compensator (6 sections)	31-6113	1.40
26	Condenser (.05 mfd. tubular)	30-4123	.20
27	Resistor (51000 ohms ½ watt)	33-351339	.20
28	Condenser (.05 mfd. tubular)	30-4020	.20
29	Resistor (99000 ohms ½ watt)	33-399339	.20
30	Resistor (99000 ohms ½ watt)	33-399339	.20
31	Condenser (250 mmfd. mica)	30-1032	.25
32	Condenser (250 mmfd. mica)	30-1032	.25
33	Resistor (700 ohms wirewound)	33-170339	.20
34	Resistor (20 ohms ½ watt)	33-020339	.20
35	Resistor (20 ohms ½ watt)	33-020339	.20
36	Condenser (.02 mfd. tubular)	30-4481	
37	Osc. Transformer (Range 1)	32-2191	.80
38	Osc. Transformer (Range 2)	32-2194	.80
39	Osc. Transformer (Range 3)	32-2197	.50
40	Osc. Transformer (Range 4)	32-2198	.50
41	Osc. Transformer (Range 5)	32-2199	.50
42	Compensator (4 sections)	31-6124	1.00
43	Condenser (600 mmfd. mica)	30-1049	.25
44	Compensator (6 section)	31-6117	1.20
45	Condenser (.05 mfd. tubular)	30-4123	.20
46	Resistor (8000 ohms ½ watt)	33-280339	.20
47	Resistor (20000 ohms ½ watt)	33-320339	.20
48	Resistor (200 ohms wirewound)	7217	.20
49	Condenser (.02 mfd. tubular)	30-4481	
50	Resistor (100 ohms wirewound)	33-3023	.25
51	Resistor (75000 ohms ½ watt)	33-375339	.20
52	Condenser (250 mmfd. mica)	30-1032	.25
53	Condenser (600 mmfd. mica)	30-1049	.25
54	Condenser (600 mmfd. mica)	30-1049	.25
55	Resistor (32000 ohms ½ watt)	33-332339	.20
56	Resistor (20000 ohms ½ watt)	33-320339	.20
57	Electrolytic Condenser (8 mfd.)	30-2024	1.10
58	Condenser (.01 mfd. tubular)	30-4169	.20
59	Resistor (10000 ohms ½ watt)	33-310339	.20
60	Condenser (25 mmfd. mica)	30-1067	.20
61	Condenser (55 mmfd. mica)	30-1045	.20
62	Coil (6A8G plate)	32-2242	.25
63	Condenser (200 mmfd. mica)	30-1047	.25
64	1st I. F. Transformer	32-2209	
65	Resistor (1000 ohms ½ watt)	32-210339	.20
66	Shadowmeter (Code 121 only)	45-2189	2.50
67	Condenser (.05 mfd. bakelite)	3615-SG	.35
68	Compensator (Pri. 2nd I.F. Trans.)	31-6079	
69	2nd I. F. Transformer	32-2211	
70	Resistor (1000 ohms ½ watt)	33-210339	.20
71	Resistor (490000 ohms ½ watt)	33-449339	.20
72	Condenser (.1-.1-.8 mfd. metal case)	30-4470	1.40
73	Resistor (490000 ohms ½ watt)	33-449339	.20
74	Resistor (1 megohm ½ watt)	33-510339	.20
75	Resistor (1 megohm ½ watt)	33-510339	.20
76	Condenser (110 mfd. dual bakelite)	8035-DG	.25
77	Resistor (490000 ohms ½ watt)	33-449339	.20
78	Resistor (490000 ohms ½ watt)	33-449339	$0.20
79	Condenser (.05 mfd. dual bakelite)	3615-DG	.40
80	Resistor (1.0 megohm ½ watt)	33-510339	.20
81	Resistor (1.0 megohm ½ watt)	33-510339	.20
82	Resistor (490000 ohms ½ watt)	33-449339	.20
83	Condenser (110 mmfd. mica)	30-1031	.30
84	Magnetic Tuning Transformer	32-2217	2.40
85	Condenser (5 mmfd. mica)	30-1083	
86	Condenser (.05 mfd. bakelite)	3615-SG	.35
87	Resistor (99000 ohms ½ watt)	33-399339	.20
88	Condenser (.25 mfd. bakelite)	6287-DG	.40
89	Resistor (99000 ohms ½ watt)	33-399339	.20
90	Resistor (51000 ohms ½ watt)	33-351339	.20
91	Condenser (110 mmfd. dual bakelite)	8035-DG	.25
92	Condenser (.01 mfd. tubular)	30-4124	.25
93	Resistor (490000 ohms ½ watt)	33-449339	.20
94	Resistor (1 megohm ½ watt)	33-510339	.25
95	Condenser (.1 mfd. bakelite)	4989-SG	.35
96	Condenser (75 mmfd. mica)	30-1053	.20
97	Volume Control	33-5158	1.00
97X	Ring & Contact Assem. (For shorting volume control Code 122 dial)	45-2350	
98	Condenser (.01 mfd. tubular)	30-4124	.25
99	Condenser (.05 mfd. tubular)	30-4449	.20
100	Condenser (110 mmfd. mica)	30-1031	
101	Resistor (70000 ohms ½ watt)	33-370339	.20
102	Resistor (70000 ohms ½ watt)	33-370339	.20
103	Condenser (.1 mfd. tubular)	30-4455	.25
104	Tone Control	33-5173	
105	Condenser (500 mmfd. mica)	30-1066	
106	Resistor (51000 ohms ½ watt)	33-351339	.20
107	Condenser (.01 mfd. tubular)	30-4169	.20
108	Condenser (.008 mfd. tubular)	30-4112	.20
109	Resistor (490000 ohms ½ watt)	33-449339	.20
110	Transformer (Audio Input)	32-7057	
111	Condenser (.003 mfd. tubular)	30-4469	.20
112	Output Transformer	32-7685	2.00
113	Cone-Voice Coil U-15	36-3631	1.75
114	Condenser (.003 mfd. tubular)	30-4469	.20
115	Resistor (203 ohms 3 taps wirewound)	33-3290	.60
116	Resistor (40000 ohms 1 watt)	33-340339	.30
117	Resistor (13000 ohms 2 watt)	33-313539	.30
118	Electrolytic Condenser (2 sections 4-4 mfd.)	30-2170	1.50
119	Resistor (7750 ohms wirewound)	33-3279	.55
120	Flood Lamp	34-2039	.07
121	Magnetic Tuning Switch (Chassis)	42-1216	.75
122	Magnetic Tuning Switch (Code 122 dial assembly)	45-2330	
123	Field Coil Assembly U-15	36-3162	8.00
124	Resistor (4000 ohms 2 watts)	33-240539	.30
125	Electrolytic Condenser (2 sections 8-10 mfd.)	30-2046	1.85
126	Choke	32-7056	2.20
127	Condenser (.15 mfd. dual bakelite)	6287-DU	.40
128	Electrolytic Condenser (8 mfd.)	30-2025	1.10
129	Power Transformer 115 V, 50-60 cycles	32-7699	7.50
	Power Transformer 115 V, 25-40 cycles	32-7700	
	Power Transformer 220 V, 50-60 cycles	32-7701	
130	Condenser (twin bakelite .015 mfd.)	3793-DG	.40
131	Base Compensation & A. C. Switch	42-1196	.75
132	Pilot Lamp (Dial)	34-2039	.07
133	Shadowmeter Lamp (Code 121 only)	34-2039	.07
134	Range Switch (Ant.)	42-1211	1.60
135	Range Switch (R. F.)	42-1212	1.60
136	Range Switch (Osc.)	42-1217	2.00

Used on Code 121 and 122

Description	Part No.		
Brace (Drive Mtg.)	28-4119	.05	
Coupling Assembly (drive)	31-1907	.45	
Shaft & Index Plate (Range Switch)	42-1208	.50	
Volume Control Shaft	38-8061		
Retaining Clip	28-4394	.01	
Spring	28-4117	.40	C
Socket (8 prong)	27-6058	.11	
Socket (7 prong)	27-6057	.11	
Socket (Power Transformer)	27-6061		
Tube Shield	28-2726	10	
Tube Shield Base	28-3898	$0.03	
Tube Shield (6N7G)	8005	.10	
Tube Shield Base (6N7G)	8004	.03	
Mtg. Grommet (R. F. Unit)	27-4317	.04	
Mtg. Sleeve (R. F. Unit)	28-2257	.01	
Mtg. Screw (R. F. Unit)	W-729	.45	C
Mtg. Spacer (R. F. Unit) code 121	27-8339	.40	C
Mtg. Spacer (R. F. Unit) code 122	27-7807	.50	C
Mtg. Washer	28-3927	.01	
Mtg. Rubber (Tuning Condenser)	27-4325	.02	
Mtg. Rubber (Chassis)	3558	.03	
Mtg. Bushing	27-4360	.04	
Mtg. Plate (R. F. Transformer)	28-3808	.02	
Mtg. Spacer (R. F. Transformer)	27-8228	.01	
Mtg. Screw (R. F. Transformer)	W-1635	.30	C
Terminal Panel (Ant.)	38-7714	.15	
Terminal Cover (Speaker)	36-3672	.15	
Knob (Tuning)	27-4330	.10	
Knob, Vernier	27-4331	.10	
Knob, Tone & Volume	27-4332	.10	
Knob, Range Switch	27-4326	.10	
Cable (Speaker)	41-3223		
A. C. Plug & Cord	L-2288	.40	
Fuses	45-2046	.05	
Bottom Shield Plate	38-8143		
Snap Fasteners	28-4279	.75	C
Speaker (U-15)	36-1252	16.00	

CODE 121

Schem. No.	Description	Part No.	List Price
	Dial	27-5249	.40
	Hub	28-7187	.12
	Clamp	28-2837	.10
	Set Screw	W-1641	.02
	Dial Screen Holder Assembly	31-1945	
	Drive Mtg. Assembly	31-1901	1.80
	Vernier Drive	31-1895	
	Gear (Dial)	28-7185	.10
	Thrust Spring	28-8511	.01
	Thrust Washer	28-3976	.30	C
	"C" Washer	28-8904	.01
	Gear (Drive)	31-1884	.25
	Mask	27-6300	.30
	Mask Arm & Link Assembly	31-1899	.50
	Mask Washer	27-8318	.50	C
	Mask Guide & Bracket	38-7876	.25
	Pilot Lamp Assembly	38-7909	.40
	Bezel Frame & Plate Assembly	40-5948	.80
	Glass	27-6300	.06
	Ring	28-3988	.45
	Gasket	27-8313	.01

CODE 122

Schem. No.	Description	Part No.	List Price
	Dial Escutcheon Assembly	45-2324	
	Auto. Dial Tuning Assembly Complete	31-1886	28.00
	Dial Scale	27-5307	.90
	Dial Screen Holder Assembly	31-1946	.01
	Gasket (Dial Scale)	27-8308	
	Mask & Link Assembly	45-2328	
	Mask Guide	28-4118	.25
	Ring (Retaining Mask Assembly)	28-7195	.20

Description	Part No.		
Set Screws (Handle)	28-5493	.02	
Screws (Cover)	W-1669	.40	C
Flood Lamp Assembly (single)	38-7937		
Pilot Lamp Assembly	38-8051	.35	
Bezel Assembly	40-5980	1.00	
Bezel Gasket	27-8517		
Screws	W-490	.55	C
Station Tab Kit	40-6018	.90	
Insulator Ring and Contact Assembly	27-8351		

Figures in black type indicate circled figures in Base View. Prices Subject to Change Without Notice.

©John F. Rider, Publisher

Parts List
Schematic, Chassis

PHILCO RADIO & TELEV. CORP.

MODEL P-1421
Packard

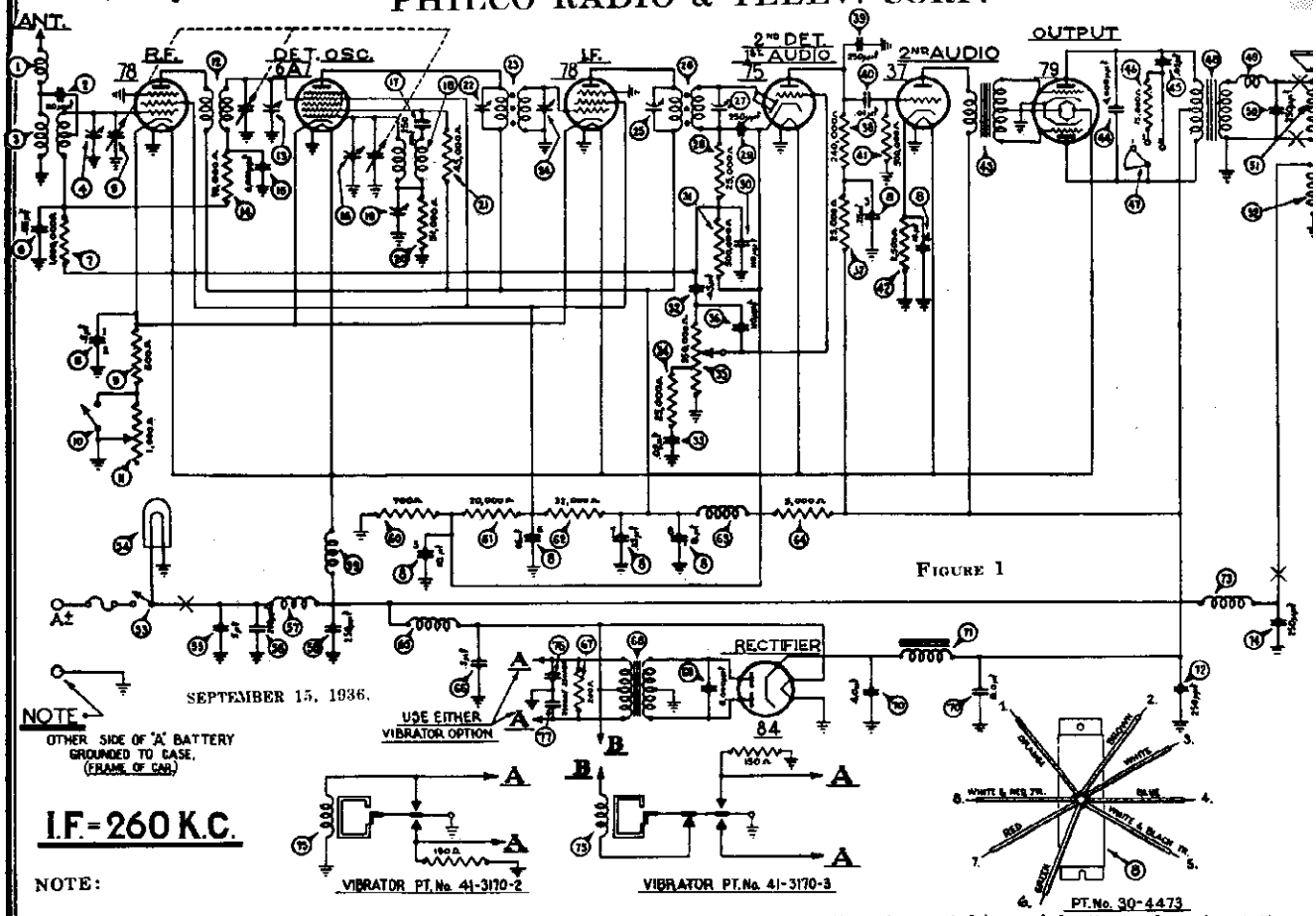

FIGURE 1

The items marked with an asterisk are rarely required for service and in many cases will not be carried in stock by the local service station. In such cases it will be necessary to order these parts from Philco Transitone, Philadelphia — Chicago or San Francisco.

No.	Description	Part No.
①	Antenna Choke	38-8074
②	Condenser (110 mmfd.)	30-1031
③	Antenna Transformer	32-2230
④	First Padder (on tun. cond.)	*
⑤	Tuning Condenser	31-1913
⑥	Condenser (.05 mfd.)	30-4444
⑦	Resistor (1,000,000 ohms)	33-510344
⑧	Condenser (.05-.25-.25-.5-8-10-10 mfd.)	30-4473
⑨	Resistor (600 ohms)	33-1212
⑩	Sensitivity Control Switch	42-1225
⑪	Sensitivity Control	33-5129
⑫	R. F. Transformer	32-2231
⑬	Second Padder (on tun. cond.)	*
⑭	Resistor (70,000 ohms)	33-370344
⑮	Condenser (6000 mmfd.)	30-4445
⑯	Third Padder (on tun. cond.)	*
⑰	Condenser (250 mmfd.)	30-1032
⑱	Oscillator Transformer	32-2232
⑲	Low Frequency Padder	31-6056
⑳	Resistor (51,000 ohms)	33-351344
㉑	Resistor (45,000 ohms)	33-345344
㉒	Padder (Pri. 1st I. F. trans.)	*
㉓	First I. F. Transformer	32-2252
㉔	Padder (Sec. 1st I. F. Trans.)	*
㉕	Padder (Pri. 2nd I. F. Trans.)	*
㉖	Second I. F. Transformer	32-2167
㉗	Padder (Sec. 2nd I. F. Trans.)	*
㉘	Resistor (25,000 ohms)	33-325344
㉙	Condenser (250 mmfd.)	30-1032
㉚	Condenser (110 mmfd.)	30-1031
㉛	Resistor (500,000 ohms)	33-449344
㉜	Condenser (.05 mfd.)	30-4444
㉝	Condenser (.02 mfd.)	30-4215
㉞	Resistor (25,000 ohms)	33-325344
㉟	Volume Control & Coupling Assembly (350,000 ohms)	38-7968
㊱	Condenser (110 mmfd.)	30-1031
㊲	Resistor (25,000 ohms)	33-325344
㊳	Resistor (240,000 ohms)	33-424344
㊴	Condenser (250 mmfd.)	30-1032
㊵	Condenser (.01 mfd.)	30-4145
㊶	Resistor (500,000 ohms)	33-449344
㊷	Resistor (2500 ohms)	33-225344
㊸	Input Transformer	32-7681
㊹	Condenser (4000 mmfd.)	30-4185
㊺	Condenser (.02 mfd.)	30-4419
㊻	Resistor (15,000 ohms)	33-315344
㊼	Tone control switch	42-1139
㊽	Output Transformer	32-7684
㊾	Choke	32-2269
㊿	Condenser (250 mmfd.)	30-1032
(51)	Cone & Voice Coil	36-3159
(52)	Field Coil Assembly	36-3513
(53)	On & Off Switch	42-1156
(54)	Pilot Lamp	34-2040
(55)	Condenser (.5 mfd.)	30-4474
(56)	Condenser (250 mmfd.)	30-1032
(57)	"A" Choke	32-1374
(58)	Condenser (250 mmfd.)	30-1032
(59)	Filament Choke	32-1374
(60)	Resistor (700 ohms)	33-1220
(61)	Resistor (20,000 ohms)	33-320344
(62)	Resistor (32,000 ohms)	33-332543
(63)	"B" Choke	32-1932
(64)	Resistor (5000 ohms)	33-250543
(65)	Vibrator Choke	32-2249
(66)	Condenser (.5 mfd.)	30-4474
(67)	Resistor (200 ohms)	33-120334
(68)	Power Transformer	32-7683
(69)	Condenser (8000 mmfd.)	30-4420
(70)	Filter Condenser (4-8 mfd.)	30-2167
(71)	"B" Filter Choke	32-7710
(72)	Condenser (250 mmfd.)	30-1032
(73)	Choke	32-2268
(74)	Condenser (250 mmfd.)	30-1032
(75)	Vibrator — Optional	41-3170-2 / 41-3170-3
(76)	Condenser (250 mmfd.)	30-1032
(77)	Condenser (250 mmfd.)	30-1032
	*Four Prong Socket	27-6043
	*Five Prong Socket	27-6035
	*Six Prong Socket	27-6036
	*Seven Prong Socket	27-6037
	*Speaker Socket	27-6030
	Inductive Suppressor	32-2250
	Interference Condenser (gen.)	30-4475
	Interference Condenser (dome light)	30-4476
	Interference Condenser	30-1477
	*Dial	27-5247
	*Tuning Shaft	28-8656

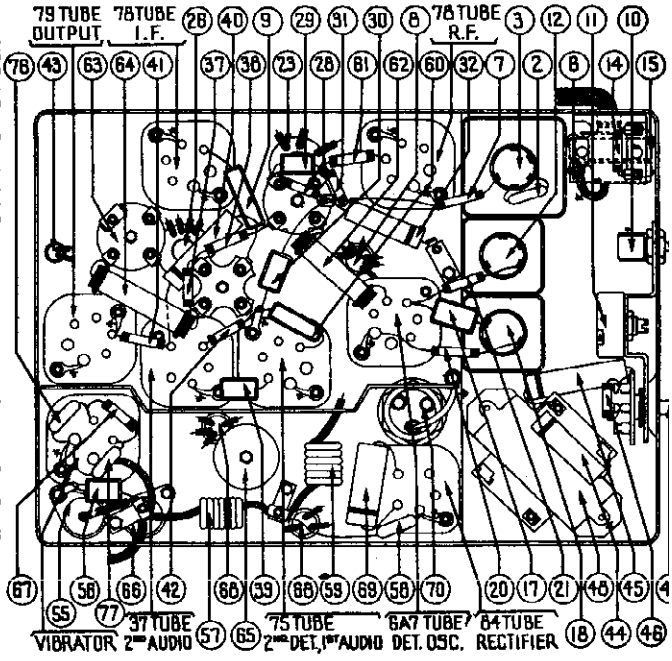

FIGURE 2

No.	Description	Part No.
	*Volume Shaft	28-8657
	*Pilot Lamb Assembly	38-6750
	Fuse	7227
	Fust Insulator	27-7729
	*Switch & Lead Assembly	41-3217
	*Antenna Lead	L-2259
	*Ammeter Lead	38-6595
	Rivet (switch mtg.)	W-1589
	Studs	28-6231
	Nuts	W-55A
	Washer	4486
	Receiver Housing	38-7997

©John F. Rider, Publisher

MODEL P-1421
Packard
Socket, Trimmers
Alignment

PHILCO RADIO & TELEV. CORP.

I. F. TRANSFORMERS AND PADDERS

The I. F. transformers are assembled complete with padding condensers.

Both the primary and the secondary padders are placed side by side in the top of the transformer shield can. The adjusting screws are accessible thru the holes in the top of the shield. (See Figure 4).

The coil windings terminate in leads instead of terminals or lugs. The color scheme of the leads is given in Figure 3.

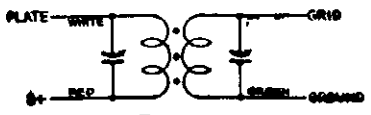

FIGURE 3

If replacements are ever necessary, replace the entire coil assembly, 32-2252 for the first I. F. stage and 32-2167 for the second I. F. stage. Neither the coil nor the padders will be furnished separately. Order only by the above numbers.

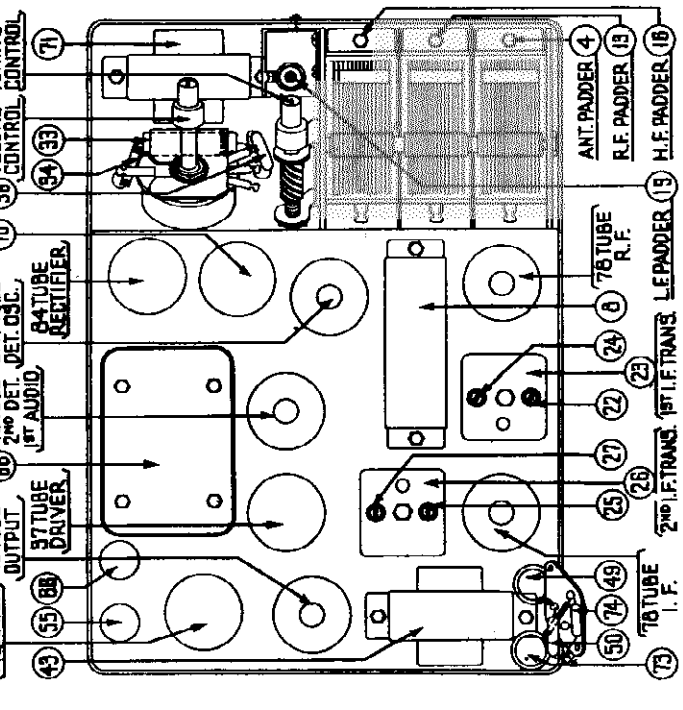

FIGURE 4

LOW FREQUENCY—Turn the tuning condenser plates in mesh to approximately 600 K. C., 60 on the dial scale and set the signal generator at 600 K. C. Roll the tuning condenser and adjust the low frequency padder screw ⑬ for maximum reading on the output meter.

HIGH FREQUENCY READJUSTMENT—Turn the tuning condenser plates out of mesh to 1550 K. C. and set the signal generator at 1550 K. C. Then adjust the high frequency padder ⑯ again for maximum reading on the output meter.

Remove the generator lead from the 78 R. F. tube.

ANTENNA — WHEN PADDING THE ANTENNA STAGE IT IS EXTREMELY IMPORTANT THAT THE PROPER DUMMY ANTENNA BE USED.

Connect the signal generator lead to the antenna lead on the Receiver using a 280 mmfd. condenser in series between the two leads.

Turn the tuning condenser to 1400 K. C. and set the generator at 1400 K. C. Adjust the padders ⑮ and ④ for the maximum reading on the output meter.

When the antenna stage adjustment is made with the Receiver installed in the car, the Receiver antenna lead must be connected to the car antenna in the usual manner. Connect the signal generator output lead to a wire placed near the car antenna but not connected to it.

MODEL P-1421 ADJUSTMENTS

All padding adjustments are carefully made at the factory and ordinarily no readjustments are necessary. However, when readjustments are required, the procedure given below must be followed in detail.

Equipment

Fully charged heavy duty storage battery or 6-volt power pack, 048A Philco Set Tester, 3164 Padding wrench, 27-7159 Padding screw driver.

General

OUTPUT METER—The output meter must be connected by means of an adapter to the plate of the type 79 output tube and to the Receiver chassis.

SIGNAL GENERATOR—With the Receiver and signal generator set up for operation at the prescribed frequency, turn the Receiver volume control on full and set the signal generator attenuator so that a half scale reading is obtained on the output meter. The signal in the speaker should be audible but not loud.

The shielding on the signal generator output lead must be connected to the Receiver housing.

Procedure

I. F.—Set the signal generator at exactly 260 K. C. Connect the generator lead to the grid cap of the 78 I. F. tube in series with a .1 mfd. condenser (without removing the grid cap).

Adjust the secondary screw padder ㉗ on the second I. F. transformer for maximum reading on the output meter. Then adjust the primary screw padder ㉕ for maximum reading (See Figure 4 for location of padders).

Remove the generator lead from the 78 tube.

Connect the generator lead to the grid cap of the 6A7 tube in series with a .1 mfd. condenser (without removing the grid cap). Adjust the secondary screw padder ㉒ on the first I. F. transformer for maximum reading on the output meter. Then adjust the primary screw padder ㉓ for maximum reading. Readjust padders ㉒ and ㉗ with the generator lead connected to the type 6A7 tube. (See Figure 4 for location of padders).

HIGH FREQUENCY AND R. F.—After padding the first I. F. stage remove the generator lead from the 6A7 tube.

Set the signal generator at 1550 K. C. and then connect the generator lead to the grid cap of the 78 R. F. tube in series with a .1 mfd. condenser (without removing the grid cap).

Using a piece of paper approximately .006" thick as a gauge between the heel of the rotor plates and the stator plates, turn the rotor plates in mesh until they strike against the paper.

With the tuning condenser in this position, adjust the high frequency padder ⑧ and the R. F. padder ④ until the maximum reading is obtained on the output meter. This is the true setting for 1550 K. C., 155 on the dial scale.

©John F. Rider, Publisher

PHILCO RADIO & TELEV. CORP.

MODEL S-1431
Studebaker
Schematic, Chassis
Parts List

STUDEBAKER — PHILCO MODEL S-1431, TWO UNIT RECEIVER

TRANSITONE

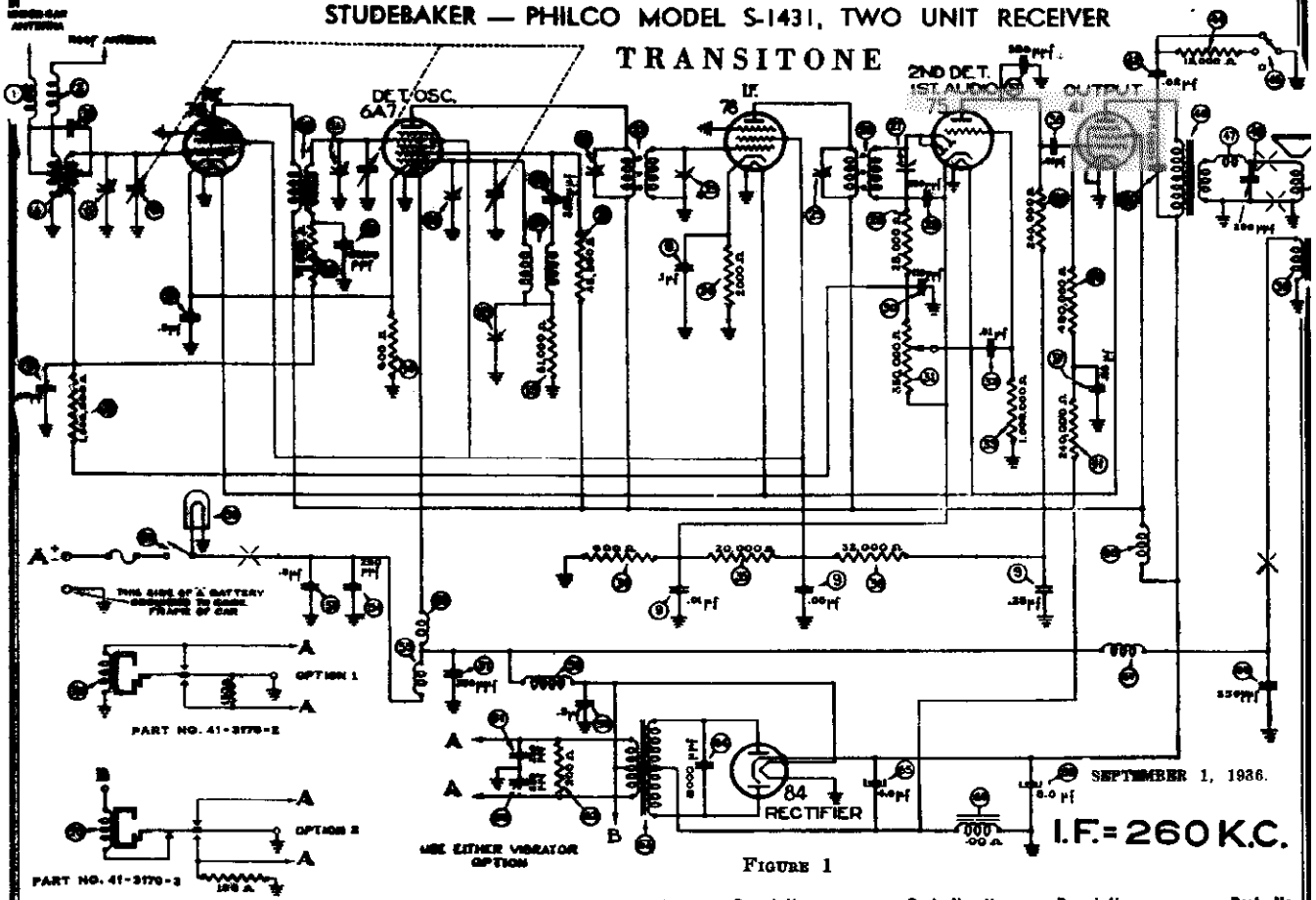

FIGURE 1

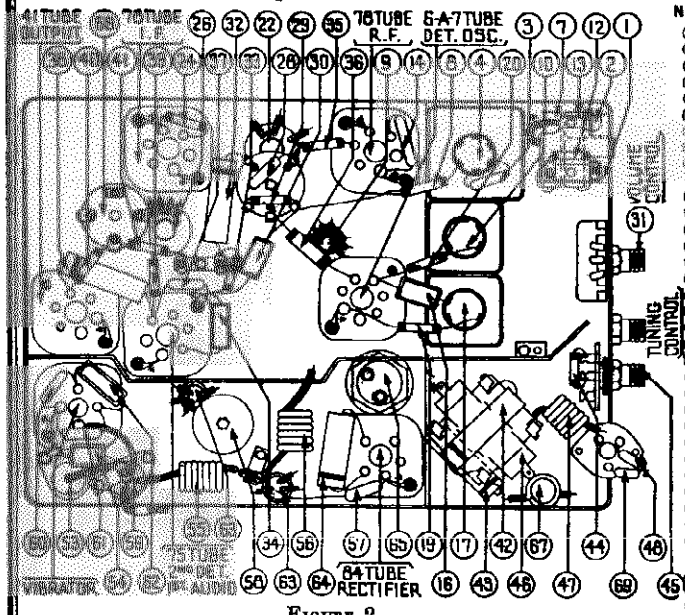

FIGURE 2

No.	Description	Part No.
	Speaker Cable	41-3231
	Ground Strap	38-7425
	Tuning and Volume Knob	28-7211
	Tone Control Knob	28-7212
	Tuning Shaft	28-8666
	Volume Shaft	28-8667
	Tone Control Shaft	28-8668
	Scale Assembly	42-5630
	Receiver Housing	38-1727

No.	Description	Part No.
①	Antenna Choke	38-8106
②	Antenna Choke	38-8106
③	Condenser (70 mmfd.)	30-1068
④	Antenna Transformer	32-2281
⑤	First Padder (on tun. cond.)	
⑥	Tuning Condenser	31-1912
	Condenser (.05 mfd.)	30-4444
	Resistor (1,000,000 ohms)	33-510344
	Condenser (.01-.05-.1-.25-.25-.5 mfd.)	30-4478
⑩	R. F. Transformer	32-2231
⑪	Second padder (on tun. cond.)	
⑫	Resistor (70,000 ohms)	33-370344
⑬	Condenser (6,000 mmfd.)	30-4445
⑭	Resistor (600 ohms)	33-1212
⑮	Third Padder (on tun. cond.)	
⑯	Condenser (250 mmfd.)	30-1032
⑰	Oscillator Transformer	32-2232
⑱	Low Frequency Padder	31-6056
⑲	Resistor (51,000 ohms)	33-351344
⑳	Resistor (45,000 ohms)	33-345344
㉑	Padder (Fri. 1st I. F. Trans.)	
㉒	First I. F. Transformer	32-2286
㉓	Padder (Sec. 1st I.F. Trans.)	
㉔	Resistor (2,000 ohms)	33-220334
㉕	Padder (Pri. 2nd I. F. Trans.)	
㉖	Second I. F. Transformer	32-2167
㉗	Padder (Sec. 2nd I. F. Trans.)	
㉘	Condenser (250 mmfd.)	30-1032
㉙	Resistor (25,000 ohms)	33-325344
㉚	Condenser (110 mmfd.)	30-1031
㉛	Volume Control (350,000 ohms)	33-5139
㉜	Condenser (.01 mfd.)	30-4479
㉝	Resistor (1,000,000 ohms)	33-510344
㉞	Resistor (600 ohms)	33-1212
㉟	Resistor (20,000 ohms)	33-320334
㊱	Resistor (32,000 ohms)	33-332444
㊲	Condenser (250 mmfd.)	30-1032
㊳	Condenser (.01 mfd.)	30-4145
㊴	Resistor (240,000 ohms)	33-424344
㊵	Resistor (490,000 ohms)	33-449344
㊶	Resistor (240,000 ohms)	33-424344

No.	Description	Part No.
㊷	Condenser (.02 mfd.)	30-4419
㊸	Condenser (4,000 mmfd.)	30-4185
㊹	Resistor (15,000 ohms)	33-315344
*㊺	Tone Control Switch	42-1247
*㊻	Output Transformer	32-7495
㊼	Choke	32-1374
㊽	Condenser (250 mmfd.)	30-1032
㊾	Cone and Voice Coil	36-3526
*㊿	Field Coil Assembly	32-9236
*(51)	On and Off Switch Assembly	42-5617
(52)	Pilot Lamp	34-2039
(53)	Condenser (.5 mfd.)	30-4474
(54)	Condenser (250 mmfd.)	30-1032
(55)	"A" Choke	32-1374
(56)	Filament Choke	32-1561
(57)	Condenser (250 mmfd.)	30-1032
(58)	Vibrator Choke	32-2249
(59)	Condenser (.5 mfd.)	30-4474
(60)	Condenser (250 mmfd.)	30-1032
(61)	Condenser (250 mmfd.)	30-1032
(62)	Resistor (200 ohms)	33-120344
(63)	Power Transformer	32-7720
(64)	Condenser (8,000 mmfd.)	30-4420
(65)	Filter Condenser (4-8 mfd.)	30-2168
(66)	Filter Choke	32-7722
(67)	Choke	32-2269
(68)	"R" Choke	32-1281
(69)	Condenser (250 mmfd.)	30-1032
(70)	Vibrator (Optional)	41-3170-2
	Vibrator (Optional)	41-3170-3
	Four-prong socket	27-6044
	Five-prong socket	27-6035
	Six-prong Socket	27-6036
	Seven-prong Socket	27-6037
	Distributor Inductor	32-2250
	Interference Condenser	30-4007
	Distributor Condenser	30-1087
	Fuse	7227
	Fuse Insulator	27-7729
	Static Collector (Pres.)	28-3584
	Static Collector (Dict.)	38-7405
	Tee Bolt (Rec. mtg.)	28-6161
	Nut (Rec. Mtg.)	W518A

The items marked with an asterisk are rarely required for service and in many cases will not be carried in stock by the local service station. In such cases it will be necessary to order these parts from Philco Transitone, Philadelphia or Chicago.

©John F. Rider, Publisher

MODEL S-1431
Studebaker
Socket, Trimmers
Alignment

PHILCO RADIO & TELEV. CORP.

MODEL S-1431 ADJUSTMENTS

SIGNAL GENERATOR—With the Receiver and signal generator set up for operation at the prescribed frequency, turn the Receiver volume control on full and set the signal generator attenuator so that a half scale reading is obtained on the output meter. The signal in the speaker should be audible but not loud.

The shielding on the signal generator output lead must be connected to the Receiver housing.

Procedure

I. F.—Set the signal generator at exactly 260 K. C. Connect the generator lead to the grid cap of the 78 I. F. tube in series with a .1 mfd. condenser (without removing the grid cap).

Adjust the secondary screw padder ㉗ on the second I. F. transformer for maximum reading on the output meter. Then adjust the primary screw padder ㉘ for maximum reading. (See Figure 4 for location of padders).

Remove the generator lead from the 78 tube.

Connect the generator lead to the grid cap of the 6A7 tube in series with a .1 mfd. condenser (without removing the grid cap). Adjust the secondary screw padder ㉓ on the first I. F. transformer for maximum reading on the output meter. Then adjust the primary screw padder ㉑ for maximum reading. (See Figure 4 for location of padders).

HIGH FREQUENCY AND R. F.—After padding the first I. F. stage remove the generator lead from the 6A7 tube.

Set the signal generator at 1550 K. C. and then connect the generator lead to the grid cap of the 78 R. F. tube in series with a .1 mfd. condenser (without removing the grid cap).

Using a piece of paper approximately .006" thick as a gauge between the heel of the rotor plates and the stator plates, turn the rotor plates in mesh until they strike against the paper.

With the tuning condenser in this position, adjust the high frequency padder ⑬ and the R. F. padder ⑪ until the maximum reading is obtained on the output meter. This is the true setting for 1550 K. C., 155 on the dial scale.

LOW FREQUENCY—Turn the tuning condenser plates in mesh to approximately 600 K. C., 60 on the dial scale and set the signal generator at 600 K. C. Roll the tuning condenser and adjust the low frequency padder screw ⑱ for maximum reading on the output meter.

HIGH FREQUENCY READJUSTMENT—Turn the tuning condenser plates out of mesh to 1550 K. C. and set the signal generator at 1550 K. C. Then adjust the high frequency padder ⑬ again for maximum reading on the output meter.

Remove the generator lead from the 78 R. F. tube.

ANTENNA—When padding the antenna stage, it is extremely important that the proper dummy antenna be constructed and used.

Connect the signal generator lead to the antenna cable assembly (made up of Part No. L-2520 lead, and a 64 mmfd. condenser in series between the lead and the signal generator. Plug the cable into the ROOF ANTENNA CONNECTOR on the end of the Receiver.

Follow this padding procedure regardless of whether the Receiver is used with the Roof or Under-car antenna.

Turn the tuning condenser to 1400 K. C. and set the generator at 1400 K. C. Adjust the padders ⑪ and ⑤ for the maximum reading on the output meter.

When the antenna stage adjustment is made with the Receiver installed in the car, the Receiver antenna lead must be connected to the car antenna in the usual manner. Connect the signal generator output lead to a wire placed near the car antenna but not connected to it.

I. F. TRANSFORMERS AND PADDERS

The I. F. transformers are assembled complete with padding condensers.

Both the primary and the secondary padders are placed side by side in the top of the transformer shield can. The adjusting screws are accessible thru the holes in the top of the shield. (See Figure 4).

The coil windings terminate in leads instead of terminals or lugs. The color scheme of the leads is given in Figure 8.

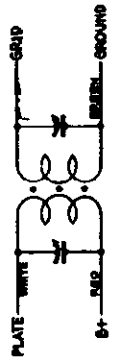

FIGURE 8

If replacements are ever necessary, replace the entire coil assembly, 32-2286 for the first I. F. stage and 32-2167 for the second I. F. stage. Neither the coil nor the padders will be furnished separately. Order only by the above numbers.

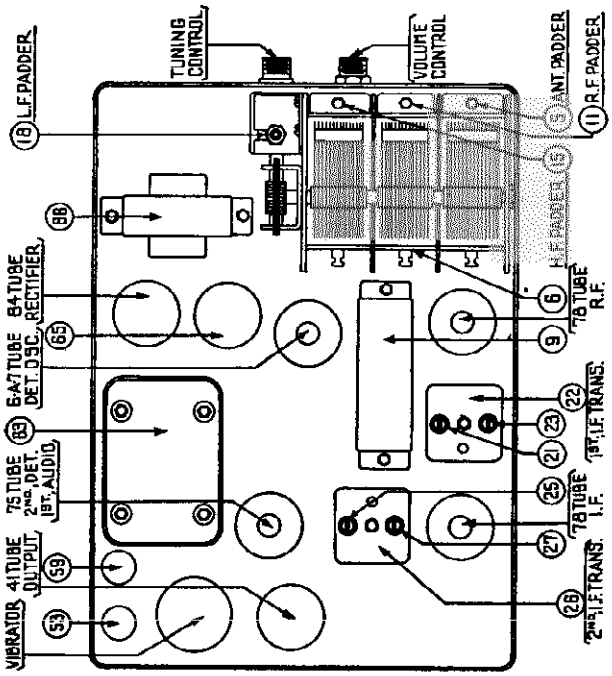

FIGURE 4

OUTPUT METER—The output meter must be connected by means of an adapter to the plate of the type 41 output tube and to the Receiver chassis.

©John F. Rider, Publisher

PHILCO RADIO & TELEV. CORP. MODELS 29, 54, 60, 116(121, 122)116X, 610

Changes

CHANGES IN MODELS

Since Publication of Each Service Bulletin

Grouped under each model and arranged according to date . . . All models included . . . August 1st to December 31st, 1935.

The second column on each page gives the "Run Number" of the set at the time of the change (where this information was available from our records). The Run Number is stamped on the top of the chassis with a rubber stamp and is the lefthand number in the rectangle.

The Code Number of the set is given on the chassis name plate or name label (at rear of chassis).

MODEL 29

Approximate Date of Change	Run No.	CHANGES
11-1-35		No. 49 on base view of Fig. 4 should be 59. No. 53 next to 49 on base view of Fig. 4 should be 59.

MODEL 54

9-1-35 | 14

	Old Part No.	New Part
Condenser 58	3793-AG	3793-AM
Condenser 60	3615-BF	3615-BY
Condenser 61	8035-F	8035-T

MODEL 60

10-1-35 | 11 | Tube Shield and Tube Shield Base Nos. 28-2726 and 28-2725 for the 6A7 Tube will no longer be necessary.

	Old Part No.	New Part No.
Resistor 51	5872 (½ watt) 2 meg.	33-1025 (¼ watt)
Resistor 53	4409 (½ watt) 1 meg.	33-1096 (¼ watt)
Resistor 62	4411 (½ watt) 99,000 ohms	6099 (¼ watt)
Resistor 54, 56	5385 (½ watt) 70,000 ohms	33-1115 (¼ watt)

MODEL 116 (Code 121 and 122)

8-1-35 | ..

Adjustment of high frequency end of broadcast band should be made at 1500 K. C. (1.5 M. C. on the Philco 088 scale) instead of 1600 K. C.

5

There will be an addition of resistor and condenser assembly.
Replace Condenser No. 6287DU 68 with 6287-ODU. The latter is impregnated with the new high melting point wax.

Remove	No. on Schematic Code 121	No. on Schematic Code 122	Install
30-4336 (.00125 mfd.)	68	68	38-6978
5837 (1000 ohms)	69	69	
33-1114 (8000 ohms)	69	69	
30-1028 (.008 mfd.)	70	64	7301

9-1-35 | 9 | This change made to eliminate frequency drift.

	Old Part No.	New Part No.
2nd I. F. Transformer 69	32-1734	32-1865

3 | Code 122 only

	Old Part No.	New Part No.
Condenser 68	30-2011	30-2069
Insulator	27-7195	27-7194

MODEL 116 (Code 121 and 122)

Approximate Date of Change	Run No.	CHANGES
11-1-35	..	Code 122
	..	The grid lead from the 6A3 power tube near the front of the chassis is changed to run over to and parallel with the end of the chassis down as far as condenser 65 then over to the input transformer. Change made to prevent audio oscillation.

Code 121, Run No. 9 Code 122, Run No. 11

Part	Schematic No. (Code 121) 65	Schematic No. (Code 122) 66	Removed
Resistor	10	Code 121	6984 (2000 ohms) ½ watt
	8	Code 122	

Schematic No.	Old Part	New Part
Tuning Condenser Assembly 59	31-1606	31-1607
Dial Mask and Hub Assembly	31-1575	29-5136

12-1-35

Code 121, Run No. 12

Code 122, Run No. 10

Input Transformer	69	32-7447	32-7057

Change 68 Resistor (10,000 ohm) to 68a

September Change Notices indicated a change in the 2nd I. F. Transformer 69. The Part No. of the new Transformer is 32-1865 and the corresponding Compensating Condenser Part No. is 31-6067.

MODEL 116X and 116B

8-1-35 | .. | Add bezel frame gasket No. 27-7973. Remove Rubber Bumper No. 27-4150 to prevent microphonics. Remove Bezel Light Guard No. 27-8001 on Codes 121 and 122.

MODEL 610

8-1-35 | 7 | Tube Shield and Tube Shield Base on the 6A7 tube will not be necessary. Remove Part No. 28-2726 and 28-2725.

10-1-35 | 8 | Part No. 6096 (5000 ohms) 5 Resistor and Part No. 33-1206 (20 ohms) 6 Resistor will not be used. In eliminating Resistor 5, shunt a wire across the terminals from which it is disconnected.

11-1-35 | .. | Reverse numbers 41 and 59 shown in Figure 8.

©John F. Rider, Publisher

MODELS 610B, 610F, 611F PHILCO RADIO & TELEV. CORP.
611(121), 620, 620(121), 623 Changes

MODEL 610F

Approximate Date of Change	Run No.	CHANGES
8-1-35	..	Remove 27-7981 Bezel Glass Gasket and install 27-8036. Add Bezel Frame Gasket, Part No. 27-7972 to 610-F.

MODEL 610B

8-1-35	..	Add Part No. 27-7971 Bezel Frame Gasket.

MODEL 611-F

9-1-35	..	Remove bezel glass gasket, Part No. 27-7981, and install Part No. 27-8036.

MODEL 611 (Code 121)

9-1-35 | 2 | The new condensers are impregnated with the high melting point wax.

	Old Part	New Part
Condenser ⑤	8035-DU	8035-ODU
Condenser ⑥	3793-SU	3793-OSU
Condenser ⑦	6287-DU	6287-ODU
Condenser ⑧	3903-SU	3903-OSU
Condenser ⑳	4989-FU	4989-OFU
Condenser ㉑	4989-DU	4989-ODU
Condenser ㉒	3615-SU	3615-OSU
Tone Control ㉓	30-4345	30-4377

10-1-35 | 2 |

	Old Part	New Part
Resistor ⑨	4287 (1 watt) 51,000 ohms	4518 (½ watt)
Condenser ⑭	30-1055 .00285 mfd. mica	30-1042

Resistor ⑱ Part No. 33-1001 (5000 ohm) no longer necessary.

12-1-35 | 4 | The Oscillator Circuit was changed to series feed.
The Oscillator Plate is disconnected from the lead connecting Condenser ⑨ and Resistor ⑪ and connected to the top of the lower primary winding. The bottom end of this primary is disconnected from Condenser ⑬ and ⑭ and connected to the lead connecting Condenser ⑧ and Resistor ⑪. The lead from Resistor ⑯ to the top of the primary is changed so that it connects to the bottom of the secondary. Resistor ⑰ is removed from the circuit. Resistor ⑱ is changed so that it connects from the 6A7 cathode to the switch side of Condenser ⑨. Resistor ⑲ is removed. The following are necessary part changes:

Part	Schematic No.	Remove Old Part No.	Add New Part No.
Resistor	⑪	33-1128 (120,000 ohm)	
Osc. Transformer	⑫	32-1831	32-1973
Resistor	⑱	33-1206 (20 ohm)	

The Dial Mask Assembly was changed to the Glowing Arrow Wave Band Indicator Type.

Part	Schematic No.	Remove Old Part No.	Add New Part No.
Tuning Condenser	⑮	31-1528	31-1740
Glowing Arrow Mask			27-5167
Glowing Arrow Screen			27-5166
Mask Arm			29-3274
Link			29-3285
Coupling			29-3586
Screen Brcket			31-1751
Hub and Set Screw Assy.		31-1550	31-1724

MODEL 620 (Code 121)

8-1-35 | | Add the following parts:
1 No. 27-7972 Bezel Frame Gasket.
1 No. 27-8036 Bezel Glass Gasket
Remove No. 27-7981 Bezel Glass Gasket
MODEL 620 B
Add No. 27-7971 Bezel Frame Gasket

10-1-35 | 5 |

	Old Part	New Part
Resistor ⑨	5887 (½ watt) 1,000 ohms	33-1023 (¼ watt)
Resistor ⑬	5385 (½ watt) 70,000 ohms	33-1115 (¼ watt)
Resistor ⑭	4411 (½ watt) 99,000 ohms	6099 (¼ watt)

MODEL 620 (Code 121)—

Approximate Date of Change	Run No.	CHANGES
11-1-35	5	A condenser, Part No. 30-4310 (.001 mf.) was connected from the center terminal of condenser ⑭ to the ground terminal of condenser ⑮. Tube Shield, Part No. 28-2726 and Tube Shield Base, Part No. 28-2725, for 6A7 tube no longer necessary.

MODEL 620

12-1-35 | 9 |

	Schematic No.	Old Part No.	New Part No.
Ant. Transformer	③	32-1699	32-1867
Det. Transformer	⑦	32-1636	32-1868
Osc. Transformer	⑫	32-1637	32-1869

MODEL 623

9-1-35 | .. | Remove pilot light reflector No. 28-2979 and replace with reflector No. 28-3237. Change made to increase light intensity through dial scale.

	Old Part	New Part
Input Transformer ㉔	32-7454	32-7480

10-1-35 | 4 | Change made to increase sensitivity.

	Old Part	New Part
1st I. F. Transformer ㉔	32-1793	32-1671
	34 I. F. Tube	1A4 Tube

| 3 | Connect bottom terminal (ordinarily grounded) to positive terminal of filament supply.

	Old Part	New Part
Volume Control ㉕	33-5115	33-5142

11-1-35 | 6 | 10,000 ohm Resistor, part ④, Part No. 33-1000, no longer necessary.

12-1-35 | .. | The Dial Mask Assembly was changed to the Glowing Arrow Wave Band Indicator Type.

Part	Schematic No.	Old Part No.	New Part No.
Wave Switch	①	42-1112	42-1155
Tuning Condenser	⑮	31-1526	31-1740
Glowing Arrow Mask			27-5167
Glowing Arrow Screen			27-5166
Mask Arm			29-3274
Link			29-3285
Coupling			29-3586
Screen Bracket			31-1751
Hub Assembly		31-1550	31-1724

| 9 | The Oscillator Circuit was changed to series feed.

Part	Remove Old Part No.	Schematic	Add New Part No.
Condenser	30-1033 (.00015 mf.)	⑭	30-1049 (.0005 mf.)
Resistor	6097 (490,000 ohm)	⑭	
Resistor	33-1013 (25,000 ohm)	⑬	
Oscillator Trans.	32-1831	⑫	32-1973
Resistor	33-1206 (20 ohm)	⑱	
Condenser	6359 (.006 mf.)	⑭	30-1031 (.00011 mf.)

©John F. Rider, Publisher

PHILCO RADIO & TELEV. CORP

MODELS 623, 623B, 623F
630, 630(121)
640(121) 640B
641, 642, 643, 650

Changes

MODEL 623 (Continued)

Approximate Date of Change	Run No.	CHANGES
..	9	**S. W. SECTION OF OSC. TRANSFORMER** Condenser ⑯ and Resistor ⑰ were removed and the wires connected to the ends of these parts were connected together. The wires between the police tap at the left of Switch Section No. 2 and the joint in the wire just above that was broken and Condenser No. 30-1049 inserted. The connection between the bottom (S. W.) primary and secondary of the Oscillator Transformer was broken and condensers ⑭ and ⑮ connected between the bottom of the secondary and ground. Resistor ⑱ removed. The lead connected to the top of the primary disconnected and brought down to the bottom of the secondary. Resistor ⑨ also removed. A lead from the bottom of the primary was connected to the lead running from Condenser ⑧ to Resistor ⑯. The oscillator plate wire was disconnected from this lead and brought down to the top of the primary. **BROADCAST AND POLICE SECTION OF OSC. TRANSFORMER** Resistor ⑰ was disconnected from the bottom of the upper section of the Osc. Transformer and connected to the switch side of the Condenser ⑧.

MODEL 623-B and 623-F

9-1-35	..	Remove bezel glass gasket, Part No. 27-7981, and replace with Part No. 27-8036.

Model 630 (Code 121)

10-1-35	4	

	Old Part	New Part
Resistor ⑱	33-1040 (½ watt) 4,000 ohms	33-1031 (¼ watt)
Resistor ⑲	6650 (½ watt) 20,000 ohms	6649 (1 watt)

11-1-35	7	Remove Shadowmeter Shunt Resistor ⑱, Part No. 33-1040 (4,000 ohms).

Part	Schematic No.	Old Part	New Part
Shadowmeter	⑱	45-2086	45-2083

MODEL 630

Schematic No.	Old Part No.	New Part No.
Ant. Transformer ③	32-1699	32-1867
Det. Transformer ⑦	32-1636	32-1868
Osc. Transformer ⑫	32-1637	32-1869

MODEL 640 (Code 121)

		Replace Resistor ⑲, Part No. 6659 (20,000 ohms) with Part No. 33-1177.
8-1-35	6	Replace speaker plug socket, No. 27-6033 with No. 27-6043.
	4	Replace 1st I. F. Transformer, Part No. 32-1835 with No. 32-1917 to prevent microphonics. Remove rubber bumper, No. 27-4150 to prevent microphonics. Remove Bezel Light Guard No. 27-8001, Part ⑭ on base view in bulletin should be 2nd I. F. Part ⑭, 1st I. F. Replace Bezel Glass Gasket No. 27-7981 with No. 27-8036. Add No. 27-7972 Bezel Frame Gasket.

11-1-35	9	

Part	Schematic No.	Old Part	New Part
Tuning Condenser	⑳	31-1556	31-1671
Run No. 10			
Shadow Meter	⑱	45-2089	45-2083
Resistor	⑱	33-1040	Removed

MODEL 640-B

Approximate Date of Change	Run No.	CHANGES
9-1-35	..	Uses K31 instead of K21 Speaker.

MODEL 641

9-1-35	..	Connect an 8,000 ohm resistor, Part No. 33-1114, across shadow meter.
10-1-35	..	**Corrections in Replacement Parts List** Part ⑭ .015 mf. Condenser is part of (64-A). Part ⑭ should be .02 mf. and the correct Part Number is 30-4025. Part ⑲ should be 3615-DG. Referring to bottom view of chassis, condenser marked ⑮ should be ⑭ and condenser ⑭ changed to ⑮. Capacity of sections in ⑭ is (.05 — .2 — .75 — .09 — .25). Part Number of B-C Resistor is 33-3214. List Price 25c. Price of No. 27-4285 Waveband Knob, List 10c.

11-1-35	..		
	Part	Old Part	New Part
	Bezel Assembly	40-5722	40-5724

12-1-35	2	A .00011 Mf. Condenser, Part No. 30-1031 is connected from the plate of the 85 Detector Tube to the Cathode Circuit.

MODEL 642

		Old Part	New Part
9-1-35	Tone Control ⑲	30-4316	30-4332

12-1-35	2	The Dial and Mask Assembly were changed to the Glowing Arrow Wave Band Indicator Type.

Part	Schematic No.	Old Part No.	New Part No.
Tuning Condenser	⑲	31-1526	31-1741
Hub and Set Screw Assembly		31-1550	31-1724
Mask Assembly			27-5157
Glowing Arrow Screen			27-5166
Screen Bracket			31-1760
Glowing Arrow Mask			27-5167
Mask Arm			29-3274
Link			29-3285
Coupling			29-3586
Pilot Lamp Assembly		38-7002	
Wave Switch	②	42-1107	42-1152

MODEL 643

9-1-35	..	Filament current reads (point) .750MA., it should read 750MA. Part No. 33-5119 ⑭ in Model 643, Bulletin No. 226, listed at $1.10 changed to $1.45.
12-1-35	..	Change Chassis Mounting Washer (rubber) listed as 27-4021 to 27-4201.
11-1-35	3	Pilot Lamp ⑭, Part No. 5816, should be Part No. 34-2065.

Part	Schematic No.	Old Part	New Part
Condenser	⑭	6859 (.006 mf.)	30-1031 (.00011 mf.)

MODEL 650

11-1-35	13	

Part	Schematic No.	Old Part	New Part
Tuning Condenser	⑤	31-1556	31-1671
Code 121, Run No. 15.			
Code 122, Run No. 16.			
Shadow Meter	⑱	45-2086 & 45-2082	45-2083
Resistor	⑱	6096	Removed

©John F. Rider, Publisher

MODELS 650, 660, 680(122)
Parts Catalog PHILCO RADIO & TELEV. CORP.
Changes

MODEL 650

Approximate Date of Change	Run No.	CHANGES
8-1-35	9	Add Part No. 27-8001 Bezel Light Guard. Part ㉘ on base view in bulletin should be 2nd I. F., Part ㉗, 1st I. F. PRICE CORRECTION— Part No. 33-3211 ㉜ resistor; correct list price is $.65 instead of $1.60. Part No. 30-4185 tubular condenser (used in several models) price changed from $0.40 to $0.25 list. Effective July 15, 1935.

Part	Remove	Schematic No.	Install
1st I. F. Transformer	32-1835	㉘	32-1917
Condenser	3615-DG		3615-DU
Rubber Bumper	27-4150		
Bezel Glass Gasket	27-7981		27-8036
Bezel Frame Gasket			27-7972
Conversion Code 121 to 123 (RX) —			
Electrolytic Condenser	30-2025	㉜	7464
Dial Assembly	31-1533		31-1651
Line Cord	L-943A		
Antenna Power Cord			41-3104
Shadow Meter	45-2086	㉞	45-2082
Tone Control	30-4343	㉟	30-4378
By-Pass Condenser	3615-SU	㊱	3615-OSU
By-Pass Condenser	6287-DU	㊲	6287-ODU
By-Pass Condenser	3615-SG	㊳	3615-OSG
By-Pass Condenser	3793-DG	㊴	3793-ODU
By-Pass Condenser	3615-DU	㊵	3615-ODU
By-Pass Condenser	8035-DG	㊶	8035-ODG

9-1-35	12	Replace Part No. 30-4351 ㊸ Tone Control with Part No. 30-4379 . 110 mmfd. condenser, Part No. 30-1031 ㊷ removed.

Code 123, Run No. 8. Code 151, Run No. 11.
Code 121, Run No. 12. Code 122, Run No. 9.

Part	Old Part		New Part
Resistor ㊹	5385	(70,000 ohms)	33-1115
Resistor ㊺	6208	(15,000 ohms)	33-1177
Resistor ㊻	5310	(5,000 ohms)	6096
Resistor ㊼	5837	(1,000 ohms)	33-1028
	Wiring Panel		38-6151

These changes made to reduce hum.

MODEL 660

9-1-35	8	Remove rubber bumper, Part No. 31-1706, (to prevent microphonics). B. C. Resistors ㊾, Part No. 33-2020, in Bulletin No. 223, should be 33-3020. Compensating Condenser No. ㊽ in Fig. 2 is labelled "standard," it should be "police"; also Condenser No. ㊼ is labelled "police" and shoud be "standard."

Part	Old Part	New Part
Tone Control (Code 121)	30-4343	30-4378
2nd I. F. Transformer ㊽	32-1734	32-1865
Tone Control (Code 122)	30-4351	30-4379

11-1-35	..	Shadow meter shunt resistor (2000 ohms) Part ㊼, Part No. 6984, removed. Reverse Numbers ㊾ and ㊼ shown in Fig. 2.

Part	Schematic No.		Old Part	New Part
Condenser	5	㊿	30-4123 (.05 mf.)	30-4170 (.1 mf.)
Tuning Condenser	3	㊾	31-1706	31-1683
Dial Hub Assembly			31-1675	31-1724

12-1-35	..	September Change Notices indicated a change of the 2nd I. F. Transformer ㊽. The Part Number of the new Transformer is 32-1865 and the corresponding Compensating Condenser Number is 31-6067.

MODEL 680 (Code 122)

Approximate Date of Change	Run No.	CHANGES
11-1-35	4	240,000 ohm resistor, Part No. 33-1097, added, connected from wiper arm (center terminal) to bottom terminal of bass control. The correct Part Number (163) on Parts List is 30-4113. Part No. of Large (H Type) Acoustic Clarifier is 36-1158.
12-1-35	5	Shadow Meter (120), Part No. 45-2088 is replaced with No. 45-2083. Shunt Resistor (121), Part No. 7352 (6,000 ohms) removed.
	6	Sensitivity Control (85), Part No. 33-5124 is replaced with Part No. 33-5144. The correct number and price for Input Transformer (157) is 32-7447 at $3.00.

U-7 SPEAKER

9-1-35	..	The correct cone assembly number for the type U-7 speaker is 36-3381.

CORRECTIONS IN 1936 PHILCO PARTS CATALOG

Tubular Paper Condenser 30-4346 should be 30-4336, working voltage, 1000.

Tubular Condenser Kit (page 13), Part No. 45-1109 should be 45-1139.

Tuning Condenser 31-1039 should be 31-1106, list $5.30.

Tuning Condenser 31-1006 should be 31-1005, list $4.00.

Potentiometer, Part No. 33-5511 should be 33-5111.

I. F. Amplifier Kit, Part No. 38-6685 should be 38-7453, list $6.15.

I. F. Amplifier Kit complete should be Part No. 40-5814, list $8.81.

Headphones only should be Part No. 45-2098 instead of 8303.

Filter Choke (in short-wave section) should be Part No. 5643 instead of 5468.

Power Amplifier Output Transformer 32-7055 should be 32-7255, list $15.00 instead of $4.50.

Heavy Duty Resistor, Part No. 33-3134 should be 33-3176.

Heavy Duty Resistor, Part No. 33-3135 should be 33-3175.

Knobs, Part No. 24-4051 should be 27-4051.

Cones, replacement for K-13 and K-17 speakers should be 36-3159, list $0.80 instead of 02996 (list $0.90).

Field Coil, S-15 Speaker should be 36-3519 instead of 36-3579.

PRICE CORRECTIONS IN 1936 CATALOG

		Price Listed	Correct Price
30-2073	Elec. Cond.	$5.75	$3.15
30-2077	Elec. Cond.	3.15	5.75
4234	Power Trans.	7.50	7.00
3868	Power Trans.	7.50	9.00
32-7067	Amp. Power Trans.	80.00	34.00
32-7032	Amp. Power Trans.	36.00	35.00
38-6057	Vibrator	6.00	5.00
L-1640	Wire (per 100 feet)	2.50	2.00
907-000	Wire (per 100 feet)	1.50	1.85

©John F. Rider, Publisher

PHILCO RADIO & TELEV. CORP. Data

Dial Drive Assemblies

Model	Type Drive	Illus.	Complete Drive Assy.	Drive Cord	Drive Cord Spring	Dial	Inverted Dial	Dial Hub Assy.	Drive Bracket	Drive Ring and Hub
4	Friction		03011			03890				
14	Cable		31-1065	04834	7776	31-1066	31-1118			
15	Cable		4016A	4020A	7776	4276				
16 (Code 121-2-3)	Friction (Rubber)	"R"	45-2149			31-1058	31-1115			
16 (Code 125-6-7)	Cable & Vernier	"R"	31-1280	31-1352	28-8245	31-1363	31-1426			
17	Cable		31-1065	04834	7776	31-1066	31-1065			
18	Cable		31-1065	04834	7776	31-1066 31-1207*	31-1241			
19	Cable		31-1119	04020	7776	31-1025	31-1024			
20-21	Friction		45-2150			4209B				
26	Cable & Vernier	"D"	31-1186	31-1457	7776	31-1208				
26CBX	Cable	"C"	31-1276	31-1457	7776		31-1481			
26	Cable & Vernier	"A"	31-1187	31-1457	7776	31-1208				
26	Cable & Vernier	"C"	31-1276	31-1457	7776	31-1243	31-1481			
30	Cable		4016A	3484A	3012	4139 (Scale)				
32	Cable		31-1074	31-1457	7776	31-1025				
34	Friction (Rubber)	"R"	45-2149			31-1102				
35-36	Friction		03011			03031				
37	Friction		03430			05811				
38	Vernier	Types "O," "S," and "T" used on this model—see illustration				31-1084				
39	Vernier	Types "O," "S," and "T" used on this model—see illustration				31-1471				
40-41-42	Cable		3393A	3484A	3012	3794				
43	Cable		05365	4020A	7776	05418				
44	Friction (Rubber)	"R"	45-2149			31-1107				
45	Cable & Vernier	"D"	31-1186	31-1457	28-8252	31-1208				
45	Cable & Vernier	"F"	31-1275	31-1457	28-8252	31-1208				
46	Friction		45-2150			4209B				
47	Cable		04835	04834	7776	04832				
48	Friction		45-2151			05811				
49	Cable & Vernier	"J"	45-2132	31-1456	7776	31-1205				
50	Friction		06522			03322				
51-52	Friction		45-2150			04031				
54	Vernier	Types "P" and "Q" used on this model—see illustration.				27-5008				
58-59	Vernier	Types "P" and "Q" used on this model—see illustration.				27-5051				

INVERTED DIAL SCALES ARE USED ON ALL MODELS HAVING CABINET INDENTIFICATION AS FOLLOWS: C8X; 1ZX; 1Z; RX; AND MODEL 0001.

* Covers Police Frequencies.

Model	Type Drive	Illus.	Complete Drive Assy.	Drive Cord	Drive Cord Spring	Dial	Inverted Dial	Dial Hub Assy.	Drive Bracket	Drive Ring and Hub
60	Vernier	Types "O," "S," and "T" used on this model—see illustration				31-1090 31-1472A				
65	Cable		3393A	3484A	3012	3398 (Scale)				
66	Vernier	Types "O," "S," and "T" used on this model—see illustration				31-1234				
70	Friction		03011			03031				
71	Friction		04835			04832	05992			
76	Cable		3393A	3484A	3012	3794 (Scale)				
77	Cable		4016A	4020A	3012	4118				
86-87	Cable		4016A	3484A	7776	3047 (Scale)¶				
89	Cable	"G"	06729-06802‡	31-1157	7776	06897				
89	Cable	"H"	31-1184	31-1157	3012	31-1590				
90	Friction		03011			03031				
91	Cable		04836	04834	7776	04832	31-1026			
93	Cable		3393A	3484A	3012	3794 (Scale)				
96	Cable		4016A	4020A	7776	4118				
97	Cable & Vernier	"H"	31-1280	31-1352	28-8245	31-1513				
111-112	Cable		4016A	4020A	7776	4276				
116	Vernier	"N"	31-1563			27-5107		28-7129	29-2826	
118	Cable & Vernier	"J"	45-2152	31-1456	7776	31-1205	31-1241			
118	Cable & Vernier	"K"	31-1279	31-1456	7776	31-1414				
144	Cable & Vernier	"B"	31-1280	31-1352	28-8245	31-1206				
200	Cable		31-1065	31-1456	7776	31-1255				
201	Cable & Vernier		31-1582	31-1456	7776	31-1205				
610	Vernier	"L" or "M"	31-1643			27-5131		31-1550		
611	Vernier	"L" or "M"	31-1643			27-5097		31-1550		
620	Vernier	"L" or "M"	31-1631			27-5098		31-1550		
623	Vernier	"L" or "M"	31-1643			27-5097		31-1550		
624	Vernier	"L" or "M"	31-1643			27-5163		31-1724		
625	Vernier	"L" or "M"	31-1631			27-5098		31-1550		
630-635	Vernier	"L" or "M"	31-1631			27-5098	27-5121	31-1550		
640	Vernier	"N"	31-1563			27-5103	27-5122	31-1550	29-2826	28-7120
641	Vernier	"N"	31-1563			27-5125		31-1550	29-2826	28-7120
642	Vernier	"L" or "M"	31-1631			27-5098		31-1550		
643	Vernier	"N"	31-1563			27-5124		31-1550	29-2826	28-7120
645	Vernier	"N"	31-1563			27-5165		31-1724	29-2826	28-7120
650	Vernier	"N"	31-1563			27-5103	27-5122	31-1550	29-2826	28-7120
651	Vernier	"N"	31-1563			27-5170		31-1724	29-2826	28-7120
655	Vernier	"N"	31-1563			27-5165		31-1724	29-2826	28-7120
660-665	Vernier	"N"	31-1563			27-5115	27-5123	28-7129	29-2826	28-7120
680	Vernier	"N"	31-1563			27-5127		28-7129	29-2826	28-7120

‡ With shadow meter bracket.
¶ Model 87—Dial scale No. 3396.

January, 1936

©John F. Rider, Publisher

Dial Drive Assemblies
Details, Notes

PHILCO RADIO & TELEV. CORP.

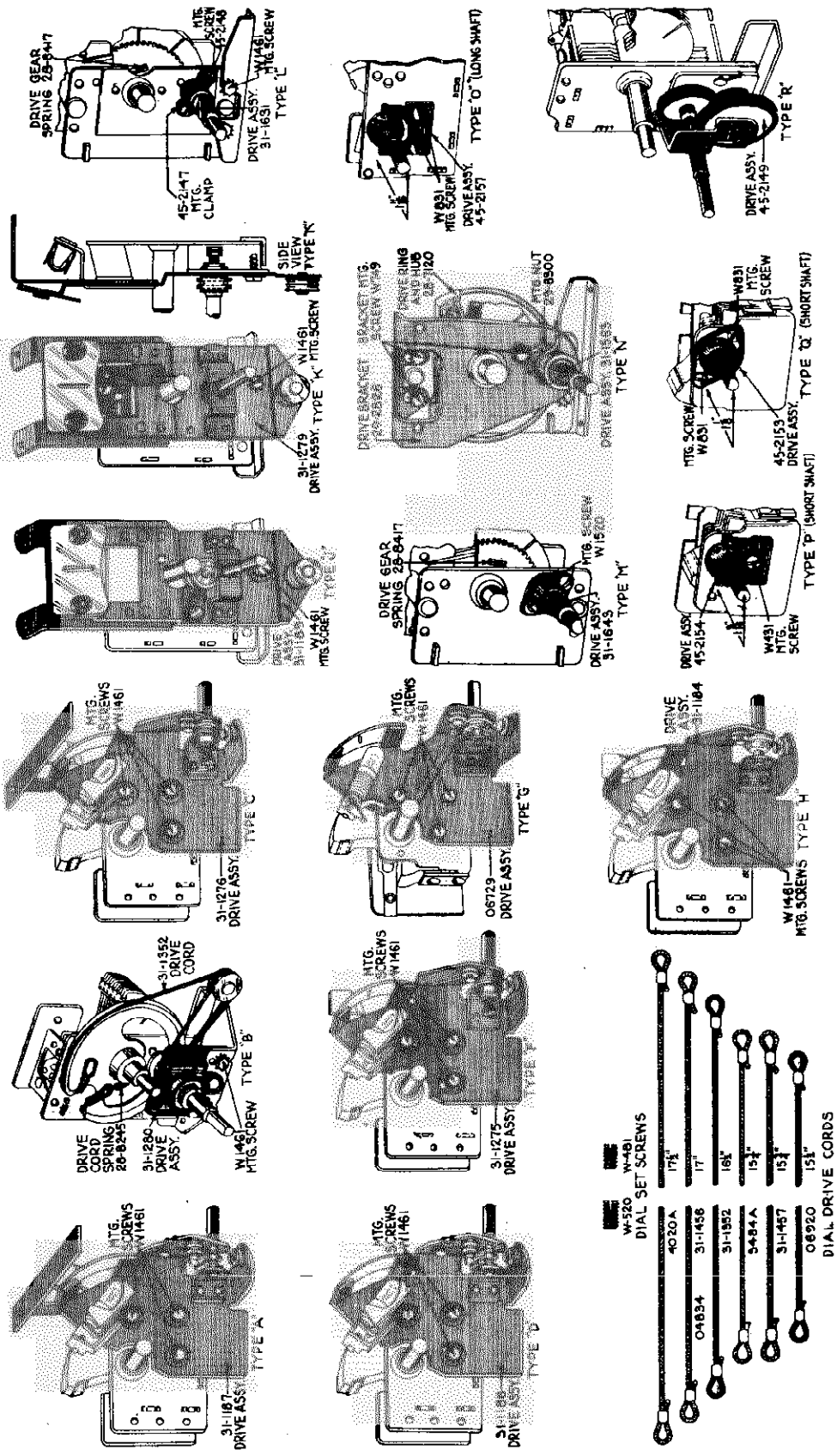

Here is complete information on dial drives for all Philco Models. This bulletin also contains a list of other miscellaneous parts such as dials, dial set screws, mounting screws and drive cords.

Illustrations of the various types of drives are provided to facilitate selecting the correct replacement assembly for models on which more than one type drive was used. These illustrations are listed by letters in the third column of the table.

To use this bulletin correctly, first locate the model number of the set being repaired. It will be found in the first column. If the model has more than one type drive, it will be listed more than once. Next, follow across to the third column for the number of the illustration. If no illustration is shown, use the assembly number in the fourth column. If an illustration is indicated, refer to pages 2 and 3, and use the assembly number of the drive that is identical to the drive assembly being repaired.

We recommend the replacement of the entire drive assembly in all cases if it is defective. This will insure a smooth working dial, plus long life.

©John F. Rider, Publisher

© John F. Rider, Publisher

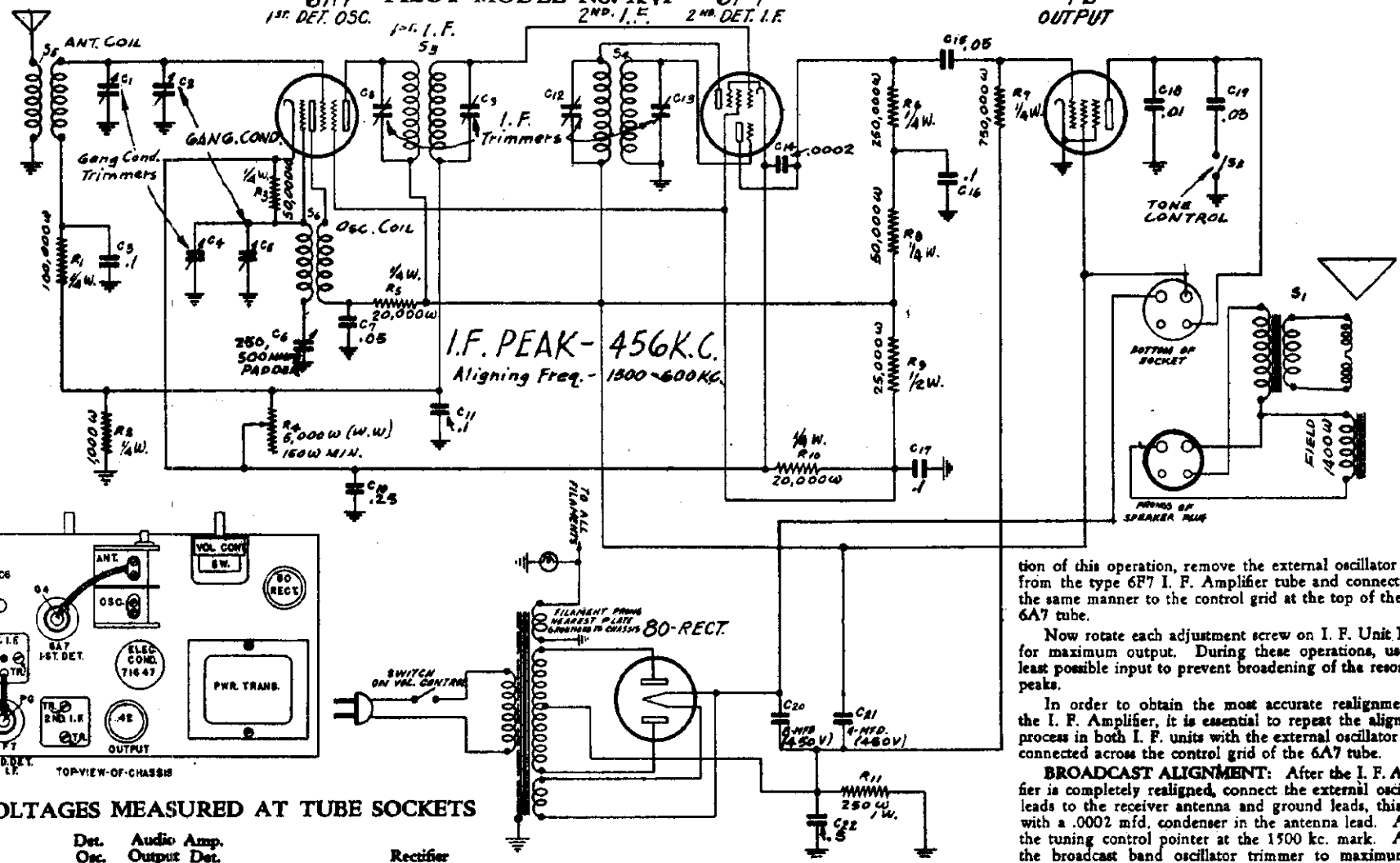

VOLTAGES MEASURED AT TUBE SOCKETS

	Det. Osc.	Audio Output	Amp. Det.	Rectifier
	6A7	42	6F7	80
PLATE	220	210	220	335 Volts D.C. from Filament to transformer center tap.
SCREEN	66	237	66	
CATHODE	18	*16	18	
FILAMENT	6.3	6.3	6.3	4.9

Speaker field volts—85 volts.
Anode grid of 6A7—150 volts.
Triode plate of 6F7—95 volts.

Plate and screen voltages measured to cathode.
Cathode voltages measured to chassis frame.

*Measured across 250 ohm resistor, R-11.
Measurements made with voltmeter of 1,000 ohms per volt.

I. F. ALIGNMENT: When aligning the intermediate Frequency Amplifier, the external oscillator must be set at 456 kc. The tuning condenser should be set at maximum capacity. Connect the antenna lead of the external oscillator to the control grid of the type 6F7 tube in the I. F. Amplifier stage through a 0.1 mfd. fixed condenser. Connect the ground lead of the external oscillator to the receiver ground clip. The I. F. alignment capacitors are located at the top of the shielded I. F. Transformers. Rotate the adjusting screw of each capacitor on I. F. Unit No. 2 slowly until maximum output is noted. On completion of this operation, remove the external oscillator leads from the type 6F7 I. F. Amplifier tube and connect it in the same manner to the control grid at the top of the type 6A7 tube.

Now rotate each adjustment screw on I. F. Unit No. 1 for maximum output. During these operations, use the least possible input to prevent broadening of the resonance peaks.

In order to obtain the most accurate realignment of the I. F. Amplifier, it is essential to repeat the alignment process in both I. F. units with the external oscillator leads connected across the control grid of the 6A7 tube.

BROADCAST ALIGNMENT: After the I. F. Amplifier is completely realigned, connect the external oscillator leads to the receiver antenna and ground leads, this time with a .0002 mfd. condenser in the antenna lead. Adjust the tuning control pointer at the 1500 kc. mark. Adjust the broadcast band oscillator trimmer to maximum response. Adjust the signal section trimmer in the same manner.

Next adjust the 600 kc. padder condenser. Set the external oscillator at 600 kc. Rotate the receiver tuning control until resonance is indicated. Then rock the tuning control back and forth about this resonance position, and at the same time adjust the padder condenser for the highest resonance peak.

Now repeat the 1500 kc. trimmer adjustment, following in every detail the procedure previously described.

MODELS 108,109
Socket,Trimmers
Voltage,Alignment

PILOT RADIO CORP.

MODELS 213,215
Voltage,Alignment

SERVICE INFORMATION
MODELS 213, 215

REMOVAL OF CHASSIS FROM CABINET:

To remove the chassis from the cabinet proceed as follows:

Be certain that the line cord is removed from the power outlet socket.

Remove the "slip-on" knobs and felt washers from the controls on the front panel.

Remove the speaker plug from the socket at the rear of the chassis.

Remove the four mounting screws, located underneath the cabinet.

REALIGNMENT: Should the receiver require realignment, the outlined procedure below should be followed. For best results an external modulated oscillator with adequate frequency range, and a visual output meter, should be used.

Before connecting the chassis to the power line, reconnect the speaker cable in its socket at the rear of the chassis.

The location of the R. F. alignment trimmer condensers is on the side of the band switch. The trimmers in the lowest row are those for aligning Band 1. Those in the second row from the bottom are for Band 2. Those in the third row up are for the Broadcast. In the Model 215 there is an additional row of trimmers located immediately above those for the Broadcast.

The padder condenser is located under the rear section of the band switch. In the Model 215 an additional padder for the Longwave range is located at the right of the Broadcast padder. Access to the padder condenser is made through a hole provided in the rear of the chassis frame.

I. F. ALIGNMENT: When aligning the Intermediate Frequency Amplifier, the external oscillator must be set at 456 kc. The Band Selector Switch should be in the position marked "Broadcast", and the tuning condenser should be set at maximum capacity. Connect the "antenna" lead of the external oscillator to the control grid of the type 6K7 tube in the I. F. Amplifier stage through a .1 mfd. fixed condenser. Connect the "ground" lead of the external oscillator to the receiver ground lead. The I. F. alignment capacitors are located at the side of the shielded I. F. Transformers. Rotate the adjusting screw of each capacitor on I. F. Unit No. 2 slowly until maximum output is noted. On completion of this operation, remove the external oscillator lead from the type 6K7 I. F. amplifier tube and connect it in the same manner to the control grid at the top of the type 6A8 tube.

Now rotate each adjustment screw on I. F. Unit No. 1 for maximum output. During these operations, use the least possible input to prevent broadening of the resonance peaks.

In order to obtain the most accurate realignment of the I. F. amplifier, it is essential to repeat the alignment process in both I. F. Units.

BROADCAST ALIGNMENT: After the I. F. amplifier is completely analigned, connect the external oscillator leads to the receiver antenna and ground leads. Set the Band Selector Switch in the "Broadcast" position and place the tuning control pointer at the 1500 kc. mark. Adjust the broadcast band oscillator trimmer.

Next adjust the interstage alignment trimmer for maximum response. Finally adjust the antenna section trimmer in the same manner.

Next adjust the 600 kc. padder condenser, located in the lower rear section of the band switch, under the chassis. Set the external oscillator at 600 kc. Rotate the receiver tuning control until resonance is indicated. Then rock the tuning control back and forth about this resonance position, and at the same time adjust the padder condenser for the highest resonance peak.

Now repeat the 1500 kc. trimmer adjustment, following in every detail the procedure previously described.

ALIGNMENT OF THE SHORT WAVE-BANDS: The procedure in aligning the short wave-bands is identical with that for the broadcast with the exception of the adjustment of the padder condenser. The alignment frequencies are as follows:

Band 2: 50 Meters (6,000 kc.)
Band 1: 16.6 Meters—(18,080 kc.)

When aligning Band 2, set the Band Selector Switch in the position marked "Band 2". Set the tuning control pointer at the 50 meters. Adjust the oscillator alignment capacitor on Band 2 for maximum output. Next adjust the interstage and antenna section alignment capacitors for maximum output.

To align Band 1, set the Band Selector Switch in the position marked "Band 1". Set the tuning control pointer at the 16.6 meter mark. Set the external oscillator at 16.6 meters. Adjust the oscillator section alignment capacitor on Band 1 for maximum output.

Proceed next to align the interstage section of Band 1. In doing this, it is essential to rock the tuning control back and forth about the resonance position and at the same time to adjust the trimmer for the highest resonance peak. Next align the antenna section for maximum sensitivity.

NOTE.

The above alignment positions refer to the Model 213 only, which is calibrated in frequency. The alignment points for the Model 215, which is calibrated in meters only, is as follows:

Longwave	Align at 750 meters.
	Pad at 2,000 meters.
Broadcast	Align at 200 meters.
	Pad at 500 meters.
Band 2	Align at 49 meters.
Band 1	Align at 17 meters.

REMOVAL OF BAND SELECTOR SWITCH ASSEMBLY: Should it be necessary to remove the switch assembly, this is easily done by removing the supporting screws. Before doing this, however, it is essential to unsolder the leads between the switch and the chassis.

It is advisable to realign the receiver after reinstalling the switch assembly.

CAUTION: When making repairs on the receiver, use only ROSIN CORE SOLDER. NEVER USE SOLDERING PASTE OR ACID FLUXES OF ANY TYPE.

RECEIVER DESCRIPTION

Operating Voltages—115, 125, 130, 220, 240 volts, Alternating Current.
Frequency Rating —50 to 60 cycles.
Power Consumption—70 Watts.
Circuit —One stage of Tuned Radio Frequency amplification for all frequencies, electron-coupled oscillator-modulator, diode detector, class "A" pentode output stage, automatic volume control.
Wavelength Range —From 550 meters to 16 meters (545 kc. to 18,800 kc.).
Undistorted power output—3 watts.
Intermediate Frequency—456 kc.
Tube Functions —Type 6K7: R. F. amplifier for all bands.
Type 6A8: Electron emission control oscillator-detector.
Type 6K7: I. F. amplifier.

VOLTAGES

The D. C. voltages measured at the tube sockets of the set should be read with a high resistance voltmeter of at least 1000 ohms per volt.

	R. F. Type 6K7	Osc. Det. Type 6A8	I. F. Type 6K7	Diode Det. Type 6H6	Aud. Driv. Type 6J7	Pow. Pent. Type 6F6	Rectifier Type 5Z4
Plate	260	260*	260	——	60**	235	——
Cathode	3.5	5.	3.5	——	3	15	——
Screen	90	90	90	——	70**	260	——
Filament	6.3	6.3	6.3	6.3	6.3	6.3	5.

Speaker field—100 volts.
* Anode Grid—190 volts.
** Measured through resistor.
All plate, screen and cathode voltages measured to ground.

MODELS 108, 109

SERVICE INFORMATION

I. F. ALIGNMENT: When aligning the Intermediate Frequency Amplifier, the external oscillator must be set at 456 kc. The Band Switch should be in the position marked "Broadcast," and the tuning condenser should be set at maximum capacity. Connect the "antenna" lead of the external oscillator to the control grid of the type 6D6 tube in the I. F. Amplifier stage through a .002 mfd. fixed condenser. Connect the "ground" lead of the external oscillator to the receiver ground lead. The I. F. alignment capacitors are located at the top of the shielded I. F. Transformers. Rotate the adjusting screw of each capacitor on I. F. Unit No. 2 slowly until maximum output is noted. On completion of this operation, remove the external oscillator leads from the type 6D6 I. F. Amplifier tube and connect it in the same manner to the control grid at the top of the type 6A7 tube.

Now rotate each adjustment screw on I. F. Unit No. 1 for maximum output. During these operations, use the least possible input to prevent broadening of the resonance peaks.

In order to obtain the most accurate realignment of the I. F. Amplifier, it is essential to repeat the alignment process in both I. F. units with the external oscillator leads connected across the control grid of the 6A7 tube.

BROADCAST ALIGNMENT: After the I. F. amplifier is completely realigned, connect the external oscillator leads to the receiver antenna and ground leads. Set the Band Switch in the "Broadcast" position and place the tuning control pointer at the 1400 kc. mark. Adjust the broadcast band oscillator trimmer to maximum response. Adjust the signal section trimmer in the same manner.

Next adjust the 600 kc. padder condenser. Set the external oscillator at 600 kc. Rotate the receiver tuning control until resonance is indicated. Then rock the tuning control back and forth about this resonance position, and at the same time adjust the padder condenser for the highest resonance peak.

Now repeat the 1400 kc. trimmer adjustment, following in every detail the procedure previously described.

ALIGNMENT OF THE SHORT-WAVE BANDS: The procedure in aligning the short wave-bands is identical with that for the broadcast with the exception of the adjustment of the padder condenser. The alignment frequency is: 16.8 Meters—(17,800 kc.)

Turn the Band Switch to the short wave position. Tune the external oscillator to 16.8 meters. Tune the receiver so that the dial pointer is in a position coincidental with the 16.8 meter indication on the dial scale. Adjust the short wave oscillator trimmer for maximum response. Next adjust the signal circuit trimmer for maximum resonance. Repeat all adjustments to assure correct alignment, rocking the gang condenser to right or left for maximum gain.

THE HIGH BAND ALIGNMENT: Procedure in the Model 105 is similar to the Broadcast section of that receiver. Align at 375 kc. Adjust the padder at 160 kc.

Should it be necessary to remove the band switch assembly, it is advisable to realign the receiver after reinstalling.

TOP VIEW OF CHASSIS MODELS No. 108-109

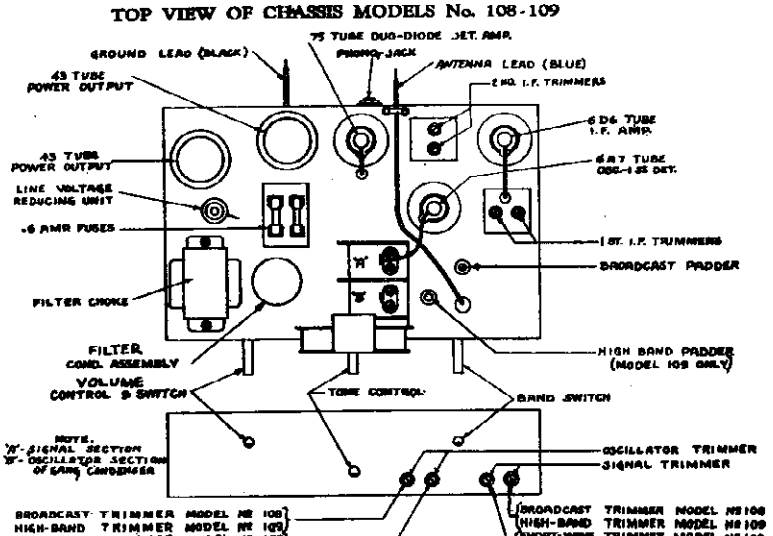

ELECTRICAL SPECIFICATIONS

Line voltage	115 Volt D. C.
Line current	.44 Amp D. C.
Power Consumption	50 Watts
Undistorted Power output	2 Watts

VOLTAGES

The D. C. Voltages measured at the tube sockets of the set should be read with a high resistance voltmeter of at least 1000 ohms per volt.

	No. 6A7 OSC. DET.	No. 6D6 I. F.	No. 75 DIODE DET.	No. 43 PWR. PENTODES
Plate	100	100	60*	85
Cathode	2.8	2.5	.6	**
Screen	65	65	——	98
Filament	6.3	6.3	6.3	25.

*Voltages measured through 500,000 ohm plate resistor.
**Grid-bias voltage for No. 43 tube 15 volts, (obtained across 5-2 Filter choke).
Anode grid of 6A7 to cathode—90 volts.
All plate voltages measured to cathode.
All screen voltages measured to cathode. All cathode voltages measured to chassis frame. Speaker field voltage 105 volts.

©John F. Rider, Publisher

©John F Rider Publisher

PILOT MODEL 125

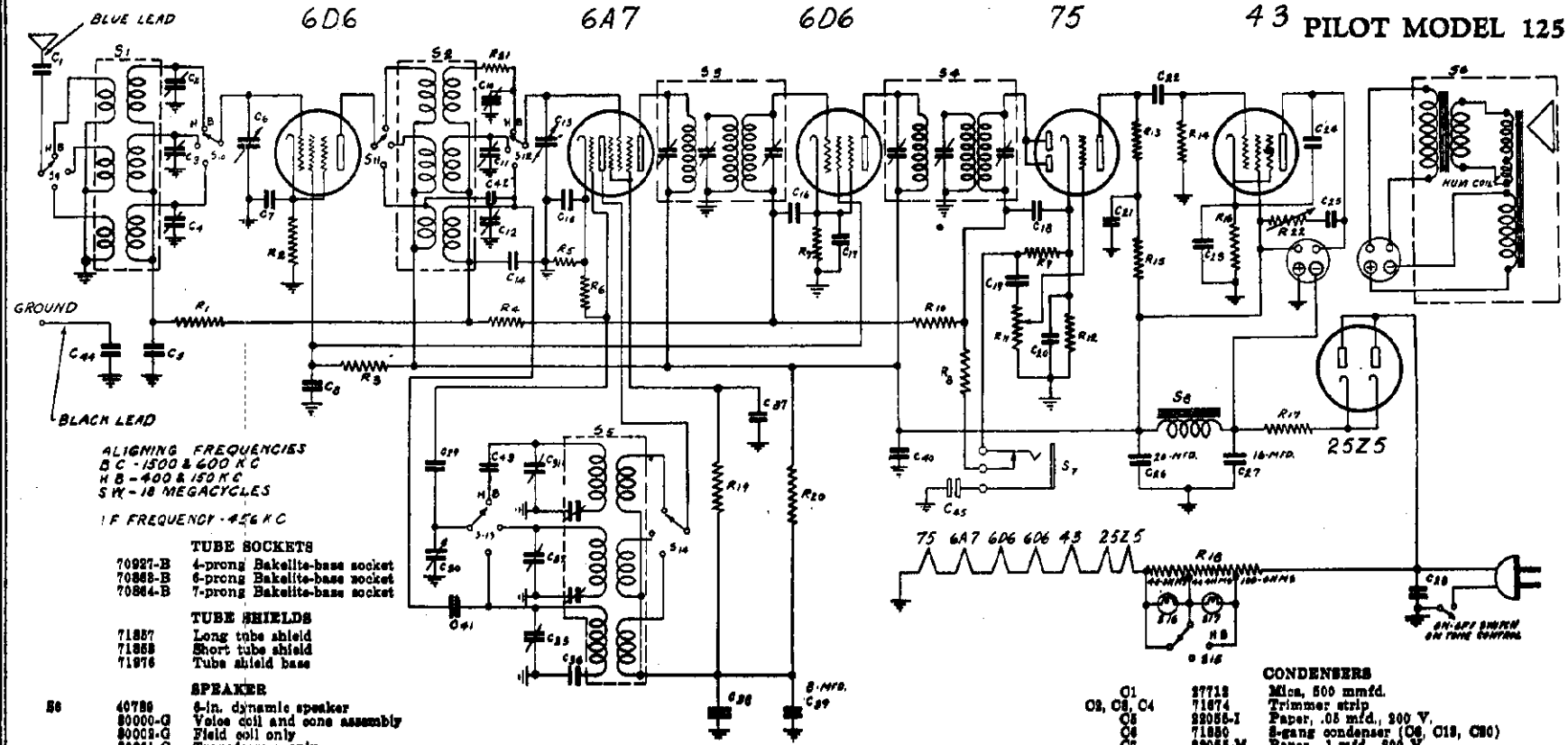

TUBE SOCKETS

	70927-B	4-prong Bakelite-base socket
	70868-B	6-prong Bakelite-base socket
	70864-B	7-prong Bakelite-base socket

TUBE SHIELDS

	71857	Long tube shield
	71858	Short tube shield
	71976	Tube shield base

SPEAKER

S6	40789	6-in. dynamic speaker
	80000-G	Voice coil and cone assembly
	80002-G	Field coil only
	80001-G	Transformer only

TUNING EQUIPMENT

S5	71675	1st I. F. transformer
S4	71676	2nd I. F. transformer
	71850	3-gang tuning condenser
	71703	Condenser drive assembly
	71735	Drive disc assembly
	71704-B	Dial and pilot light bracket assembly
	75025	Dial pointer
	642	Pointer holding screw
	75026	Dial pointer spacing washer
	71182	Dial crystal
S16, S17	71282	Dial light bulb, 6.8v., .3A, bayonet base
	71861	Dial light socket assembly

SWITCHES AND CONTROLS

	72113	Band switch assembly, Model 125
R22	70954	Tone control and switch
R11	70955	Volume control
J7	70950	Phonograph jack

KNOBS

	72176	Knob for volume and tone controls
	72178	Knob for tuning

ESCUTCHEON PLATES

	70953-I	Band switch escutcheon, Model 125
	71145	Dial escutcheon
	70953-H	Tone control escutcheon

RESISTORS

R1	18081	Carbon, 100,000 ohms, ¼ w.
R2	18115	Carbon, 400 ohms, ¼ w.
R3	18149	Carbon, 6,000 ohms, ¼ w.
R4	18081	Carbon, 100,000 ohms, ¼ w.
R5	18115	Carbon, 400 ohms, ¼ w.
R6	18164	Carbon, 50,000 ohms, ¼ w.
R7	18115	Carbon, 400 ohms, ¼ w.
R8	18164	Carbon, 50,000 ohms, ¼ w.
R9	18147	Carbon, 500,000 ohms, ¼ w.
R10	18001	Carbon, 1 megohm, ¼ w.
R11	70955	Volume control, 750,000 ohms
R12	18116	Carbon, 12,000 ohms, ¼ w.
R13, R14	18024	Carbon, 800,000 ohms, ¼ w.
R15	18164	Carbon, 50,000 ohms, ¼ w.
R16	18146	Carbon, 600 ohms, ½ w.
R17	18172	Carbon, 30 ohms, ½ w.
R18	71858	Wire-wound, 180 ohms
R19	18149	Carbon, 6,000 ohms, ¼ w.
R20	18078	Carbon, 8,000 ohms, ½ w.
R21	18029	Carbon, 250 ohms, ¼ w.
R22	70954	Tone control, 100,000 ohms

CHOKE COIL

S8	42007-B	Choke coil

COILS

S5	71698	Oscillator coil with can, Model 125
S2	71697	Detector coil with can, Model 125
S1	71698	Antenna coil with can, Model 125

CONDENSERS

C1	27712	Mica, 500 mmfd.
C3, C5, C4	71674	Trimmer strip
C5	22055-I	Paper, .05 mfd., 200 V.
C6	71850	3-gang condenser (C6, C12, C30)
C7	22055-M	Paper, .1 mfd., 200 V.
C8	22055-P	Paper, .05 mfd., 400 V.
C10, C11, C12	71674	Trimmer strip
C13	Refer to	C6
C14	22055-I	Paper, .05 mfd., 200 V.
C15	22055-M	Paper, .1 mfd., 200 V.
C16	22055-I	Paper, .05 mfd., 200 V.
C17	22055-M	Paper, .1 mfd., 200 V.
C18	27701-W	Mica, 250 mmfd.
C19	22055-A	Paper, .01 mfd., 600 V.
C20	71675	Electrolytic, 10. - 10. mfd., 25 V. (C20, C25)
C21	22055-L	Paper, .1 mfd., 400 V.
C22	22055-A	Paper, .01 mfd., 600 V.
C23	Refer to	C20
C24	22055-R	Paper, .005 mfd., 1,000 V.
C25	22055-P	Paper, .05 mfd., 400 V.
C26, C27	71676	Electrolytic (C26, 8. mfd., C27, 16. mfd., C39, 20 mfd., 150 V.)
C28	22055-A	Paper, .01 mfd., 600 V.
C29	27723-W	Mica, 50 mmfd.
C30	Refer to	C6
C31, C32, C33	71674	Trimmer strip
C36	27745-W	Mica, .0025 mfd.
C37, C38	22055-P	Paper, .05 mfd., 400 V.
C39	Refer to	C26
C40	22055-L	Paper, .1 mfd., 400 V.
C41	71525-A	Neutralizing condenser
C42	27737-O	Mica, 10 mmfd.
C43	22055-W	Paper, .01 mfd., 400 V.
C44	22055-R	Paper, .005 mfd., 1,000 V.
C45	22055-M	Paper, .1 mfd., 200 V.

Model 125 Short, Medium & Longwave Receiver

Range: 16-51 Meters (18,800-5,860 kc.) 182-555 Meters (1,650-540 kc.) 731-2,140 Meters (410-140 kc.)

(for sale in European area only)

	R.F. AMP.	OSC.-1st DET.	I.F. AMP.	2nd DET. DIODE	AUDIO OUTPUT	DUAL RECTIFIER
	6D6	6A7	6D6	75	43	25Z5
PLATE	96	96	96	45*	91	——
SCREEN	80	65	80	——	95	——
CATHODE	2.6	2.25	2.6	.5	12.5	120**
FILAMENT	6.3	6.3	6.3	6.3	25	25

NOTE: The D.C. voltages measured at the tube sockets of the set should be read with a high resistance voltmeter of at least 1,000 ohms per volt.

All voltages measured to chassis.
Speaker field voltage 118 volts.
Anode Grid of 6A7 81 volts.
* Measured through Plate Resistor.
** Cathode to chassis.

NOTE: These measurements should be made with the volume control turned to the right, and with the tuning adjusted at "No signal" position on dial.

Power Consumption ..... 50 Watts

Line Volts ..... 110-125 volts A.C.-D.C.

I. F. Frequency ..... 456 Kc.

Power Output ..... 1 Watt

REALIGNMENT: Should the receiver require realignment, the outlined procedure below should be followed. In the schematic wiring diagram the location and function of the various alignment capacitors are clearly illustrated. For best results an external modulated oscillator with adequate frequency range, and a visual output meter should be used.

Before connecting the chassis to the power line, reconnect the speaker cable in its socket at the top of the chassis.

I. F. ALIGNMENT: When aligning the Intermediate Frequency Amplifier, the external oscillator must be set at 456 kc. The Band Selector Switch should be in the position marked "Broadcast", and the tuning condenser should be set at maximum capacity. Connect the "antenna" lead of the external oscillator to the control grid of the type 6D6 tube in the I. F. Amplifier stage through a .1 mfd. fixed condenser. Connect the "ground" lead of the external oscillator to the receiver chassis. The I. F. alignment capacitors are located at the side of the shielded I. F. Transformers. Rotate the adjusting screw of each capacitor on I. F. Unit No. 2 slowly until maximum output is noted. On completion of this operation, remove the external oscillator lead from the type 6D6 I. F. amplifier tube and connect it in the same manner to the control grid at the top of the type 6A7 tube.

Now rotate each adjustment screw on I. F. Unit No. 1 for maximum output. During these operations, use the least possible input to prevent broadening of the resonance peaks.

In order to obtain the most accurate realignment of the I. F. Amplifier, it is essential to repeat the alignment process in both I. F. Units, with the external oscillator connected to the 6A7 tube.

BROADCAST ALIGNMENT: After the I. F. Amplifier is completely realigned, connect the external oscillator leads to the receiver antenna and ground this time with a 200 mmf. condenser in the antenna lead. Set the Band Selector Switch in the "Broadcast" position and place the tuning control pointer at the 1500 kc. mark. Adjust the broadcast band oscillator trimmer to maximum response.

Next adjust the interstage alignment trimmer for maximum response. Finally adjust the antenna section trimmer in the same manner.

Next adjust the 600 kc. padder condenser, located on the top of the oscillator coil. Set the external oscillator at 600 kc. Rotate the receiver tuning control until resonance is indicated. Then rock the tuning control back and forth about this resonance position, and at the same time adjust the padder condenser for the highest response.

Now repeat the 1500 kc. trimmer adjustment, following in every detail the procedure previously described.

ALIGNMENT OF THE SHORT WAVE BAND: The procedure in aligning the short wave band is identical with that for the broadcast with the exception of the adjustment of the padder condenser. The alignment frequency is 16.8 Meters—(17,800 kc.).

Turn the Band Switch to the right. Tune the external oscillator to 16.8 meters. Tune the receiver so that the dial pointer is in a position coincidental with the 16.8 meter indication on the dial scale. Adjust the short wave oscillator trimmer for maximum response. Next adjust the signal circuit trimmer for maximum resonance. Repeat all adjustments to assure correct alignment, rocking the gang condenser to right or left for maximum gain.

THE HIGH BAND ALIGNMENT: Procedure in the Model 125 is similar to the Broadcast section of that receiver. Align at 375 kc. Adjust the padder at 160 kc.

Should it be necessary to remove any part of the band switch assembly, it is advisable to realign the receiver after reinstalling.

ALL-WAVE ANTENNA SYSTEM

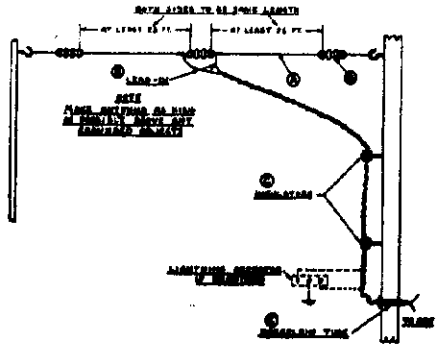

CONTENTS OF PILOT KIT

2—75 ft. lengths of No. 14 enameled, copper wire ..... A
100 ft. twisted pair lead-in wire ..... B
2—Insulated stand-off insulators C
3—Porcelain insulators ..... D
2—Porcelain tubes ..... E
6—Insulated staples

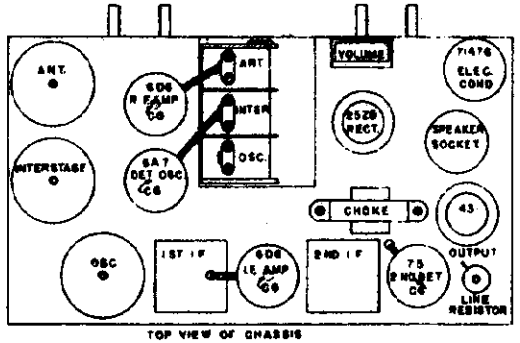

TOP VIEW OF CHASSIS

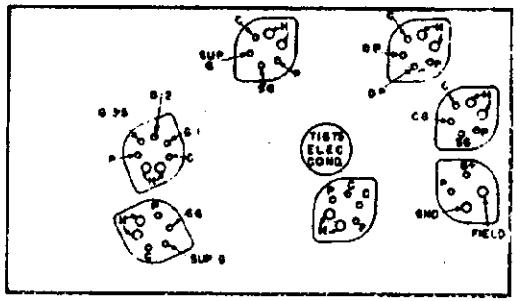

BOTTOM VIEW-ARRANGEMENT OF SOCKETS

© John F. Rider, Publisher

Trimmers, Voltage Alignment, Parts

PILOT RADIO CORP.

MODELS 153, 155 Schematic, Socket

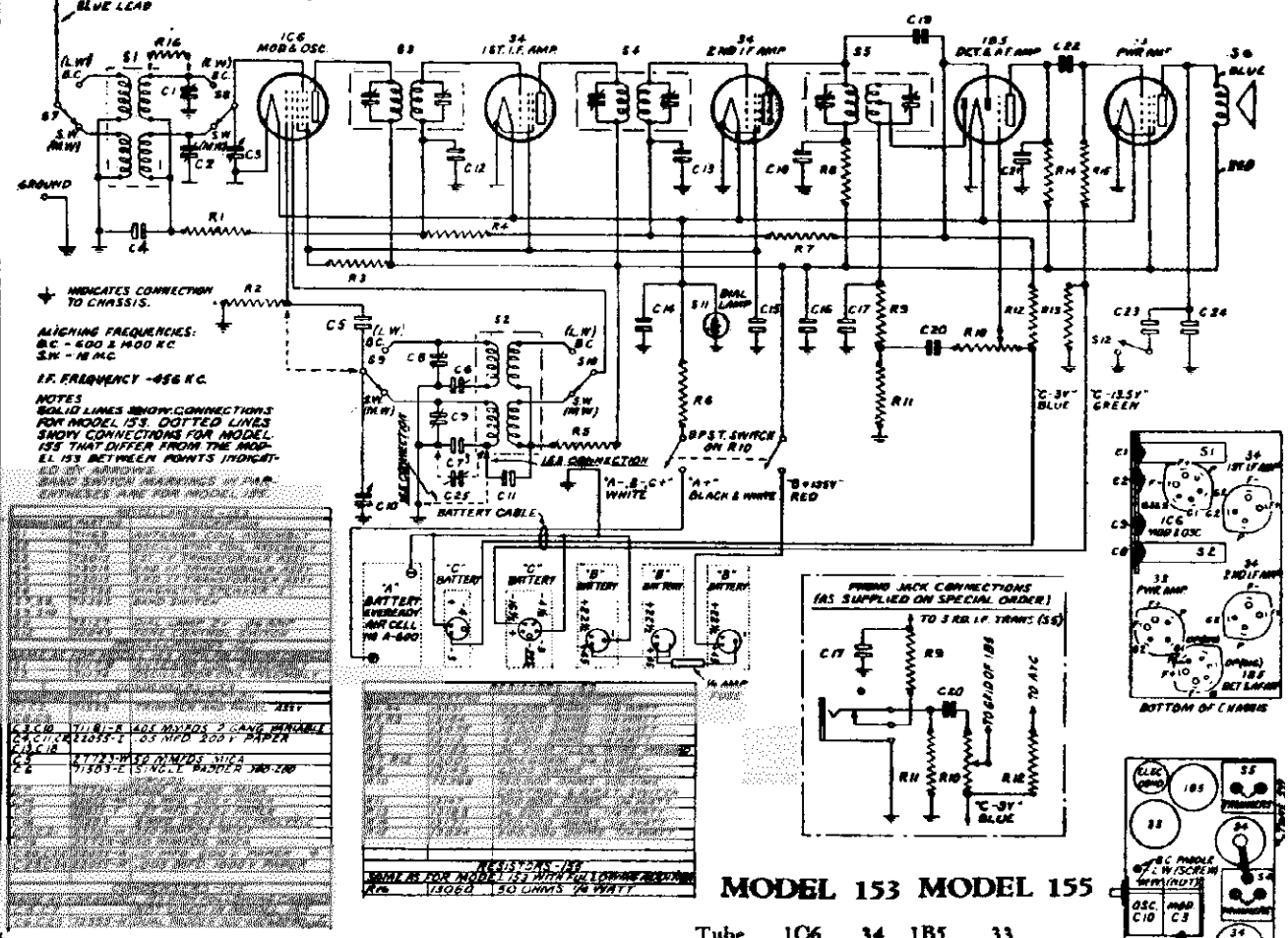

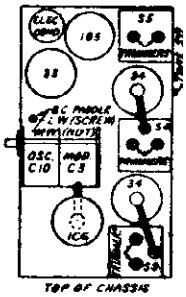

MODEL 153 MODEL 155

Tube	1C6	34	1B5	33
Plate	140*	140	95	125
Screen	75	75	—	140
Pil.	2.1	2.1	2.1	2.1

*Anode grid of 1C6 is 125 V.

Batteries Required: One Eveready Air Cell or 2.2-volt storage battery, three 45-volt B batteries, one 22½-volt C battery, and one 4½-volt C battery.

Tubes: Two 34's, one 1C6, one 33, one 1B5.

Wavelength Range: 16-52 m. and 178-550 m. or 18,800-5,700 kc. and 1,680-545 kc.

Undistorted Power Output: .7 watt.

I. F. Alignment Frequency: 456 kc.

Circuit: Short wave and broadcast superheterodyne.

Output: Class A pentode amplifier.

Air Cell Life: When operating a Pilot 153, the No. A-600 Air Cell will have a total operating life of approximately 1,000 hours.

REALIGNMENT: Should the receiver require realignment, the procedure outlined below should be followed. In the service information sheet, the location and function of the various alignment capacitors are clearly illustrated. For best results an external modulated oscillator with adequate frequency range, and a visual output meter, should be used.

Before connecting the chassis to the power line, reconnect the speaker cable in its socket at the rear of the speaker.

I. F. ALIGNMENT: When aligning the Intermediate Frequency Amplifier, the external oscillator must be set at 456 kc. The Band Switch should be in the position marked "Broadcast", and the tuning condenser should be set at maximum capacity. When aligning the receiver on all positions, the volume control and the tone control should be turned to the maximum clockwise position. Connect the antenna lead of the external oscillator to the control grid of the 34 tube in the 2nd I. F. Amplifier through .1 mfd. fixed condenser. Connect the ground lead of the external oscillator to the receiver ground lead. The I. F. alignment trimmers are located at the top of the shielded I. F. Transformers. Rotate the adjusting screw of each capacitor on I. F. Unit No. 3 slowly until maximum output is noted. On completion of this operation, remove the external oscillator lead from the 34 2nd I. F. amplifier tube and connect it in the same manner to the control grid of the 34 1st I. F. amplifier tube. Now rotate each adjustment screw on I. F. Unit No. 2 for maximum output. Following this, connect the external oscillator leads to the control grid of the 1C6 tube. Adjust each trimmer on the I. F. Unit No. 1 for maximum gain.

During these operations, use the least possible input to prevent broadening of the resonance peaks.

In order to obtain the most accurate realignment of the I. F. amplifier, it is essential to repeat the alignment process in all I. F. Units, with the external oscillator leads connected across the control grid of the 1C6 tube.

BROADCAST ALIGNMENT: After the I.F. amplifier is completely realigned, connect the external oscillator leads to the receiver antenna and ground leads with a .0002 mfd. condenser in the antenna lead. Set the Band Switch in the "Broadcast" position and place the tuning control pointer at the 1400 kc. mark. Adjust the broadcast band oscillator trimmer to maximum response. Adjust the signal section trimmer in the same manner.

Next adjust the 600 kc. padder condenser. Set the external oscillator at 600 kc. Rotate the receiver tuning control until resonance is indicated. Then rock the tuning control back and forth about this resonance position, and at the same time adjust the padder condenser for the highest resonance peak.

Now repeat the 1400 kc. trimmer adjustment, following in every detail the procedure previously described.

ALIGNMENT OF THE SHORT-WAVE BAND: The procedure in aligning the short-wave bands is identical with that for the broadcast with the exception of the adjustment of the padder condenser. Insert a 400-ohm non-inductive resister in the signal generator antenna lead. The alignment frequency is 16.6 meters—(17,800 kc.)

Turn the Band Switch to the right. Tune the external oscillator to 16.8 meters. Tune the receiver so that the dial pointer is in a position coincidental with the 16.8 meter indication on the dial scale. Adjust the short wave oscillator trimmer for maximum response. Next adjust the signal circuit trimmer for maximum resonance. Repeat all adjustments to assure correct alignment, rocking the gang condenser to right or left for maximum gain.

THE LONG WAVE ALIGNMENT: Procedure in the Model 155 is similar to the Broadcast section of that receiver. Align at 575 kc. Adjust the padder at 160 kc.

Should it be necessary to remove the band switch assembly, it is advisable to realign the receiver after reinstalling.

©John F. Rider, Publisher

MODELS 203,205
Schematic,Voltage
Socket,Trimmers
Alignment,Parts

PILOT RADIO CORP.

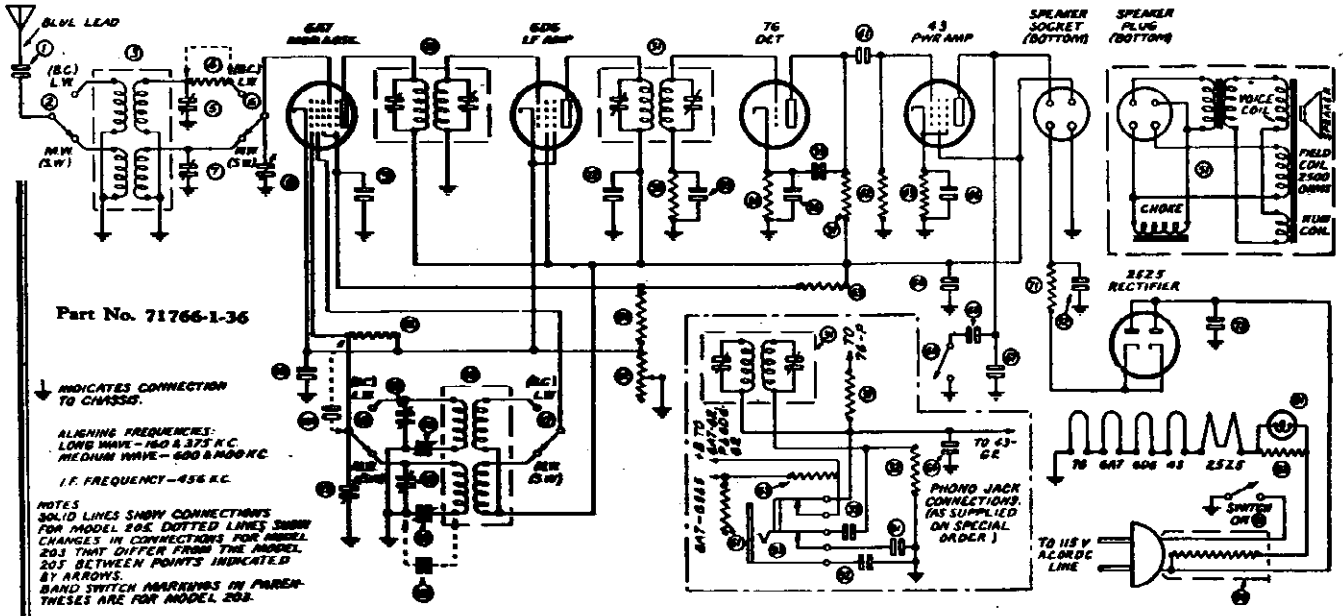

SERVICE DATA

Line Voltage: 115-125 volts, A.C. or D.C.
Power Consumption: 45 watts.
Wavelength Range: 178-550 meters, 789-2142 meters.
Undistorted Power Output: 1 watt.
Intermediate Frequency: 456 kc.

MODEL 203 SUPERHETERODYNE

MODEL 205 (Sold in the European Area only)

Voltages: Read tube socket voltages with meter having resistance of at least 1,000 ohms per volt. All voltages measured to chassis.

Type	6A7	6D6	76	43	25Z5
Plate	95	95	30*	90	—
Cathode	2.8	2.8	2.5	13	116
Screen	50	95	—	95	—
Heater	6.3	6.3	6.3	25	25

*Voltage measured through plate resistor.
Speaker field voltage, 115 volts.
Anode grid of 6A7, 95 volts.

BEALIGNMENT: Should the receiver require realignment, the outlined procedure below should be followed. In the service information sheet, the location and function of the various alignment capacitors are clearly illustrated. For best results an external modulated oscillator with adequate frequency range, and a visual output meter should be used.

Before commencing the alignment procedure, remove the back of the cabinet and the rear of the chassis.

I.F. ALIGNMENT: When aligning the Intermediate Frequency amplifier, the external oscillator must be set at 456 kc. The Band Switch should be in the position marked "Broadcast", and the tuning condenser should be set at maximum capacity. Connect the "antenna" lead of the external oscillator to the control grid of the type 6D6 tube in the I.F. Amplifier stage through a .1 mfd. fixed condenser. Connect the "ground" lead of the external oscillator to the receiver ground lead. The I.F. alignment capacitors are located at the top of the shielded I.F. Transformers. Rotate the adjusting screw of each capacitor on I.F. Unit No. 2 slowly until maximum output is noted. On completion of this operation, remove the external oscillator leads from the type 6D6 I.F. Amplifier tube and connect it in the same manner to the control grid at the top of the type 6A7 tube.

Now rotate each adjustment screw on I.F. Unit No. 1 for maximum output. During these operations, use the least possible input to prevent broadening of the resonance peaks.

In order to obtain the most accurate realignment of the I.F. Amplifier, it is essential to repeat the alignment process in both I.F. units with the external oscillator leads connected across the control grid of the 6A7 tube.

BROADCAST ALIGNMENT: After the I.F. amplifier is completely realigned, connect the external oscillator leads to the receiver antenna and ground leads with a .0002 mfd. condenser in the antenna lead. Set the Band Switch in the "Broadcast" position and place the tuning control pointer at the 1400 kc. mark. Adjust the broadcast band oscillator trimmer to maximum response. Adjust the signal section trimmer in the same manner.

Next adjust the 600 kc. padder condenser. Set the external oscillator at 600 kc. Rotate the receiver tuning control until resonance is indicated. Then rock the tuning control back and forth about this resonance position, and at the same time adjust the padder condenser for the highest resonance peak.

Now repeat the 1400 kc. trimmer adjustment, following in every detail the procedure previously described.

SHORT-WAVE ALIGNMENT: The procedure in aligning the short-wave bands is identical with that for the broadcast with the exception of the adjustment of the padder condenser. The alignment frequency is 16.8 Meters—(17,800 kc.) Turn the Band Switch to the right. Tune the external oscillator to 16.8 meters. Tune the receiver so that the dial pointer is in a position coincidental with the 16.8 meter indication on the dial scale. Adjust the short wave oscillator trimmer for maximum response. Next adjust the signal circuit trimmer for maximum resonance. Repeat all adjustments to assure correct alignment, rocking the gang condenser to right or left for maximum gain.

THE LONG WAVE ALIGNMENT: Procedure in the Model 205 is similar to the Broadcast section of that receiver. Align at 375 kc. Adjust the padder at 160 kc.

Should it be necessary to remove the band switch assembly, it is advisable to realign the receiver after reinstalling.

©John F. Rider Publisher

©John F. Rider Publisher

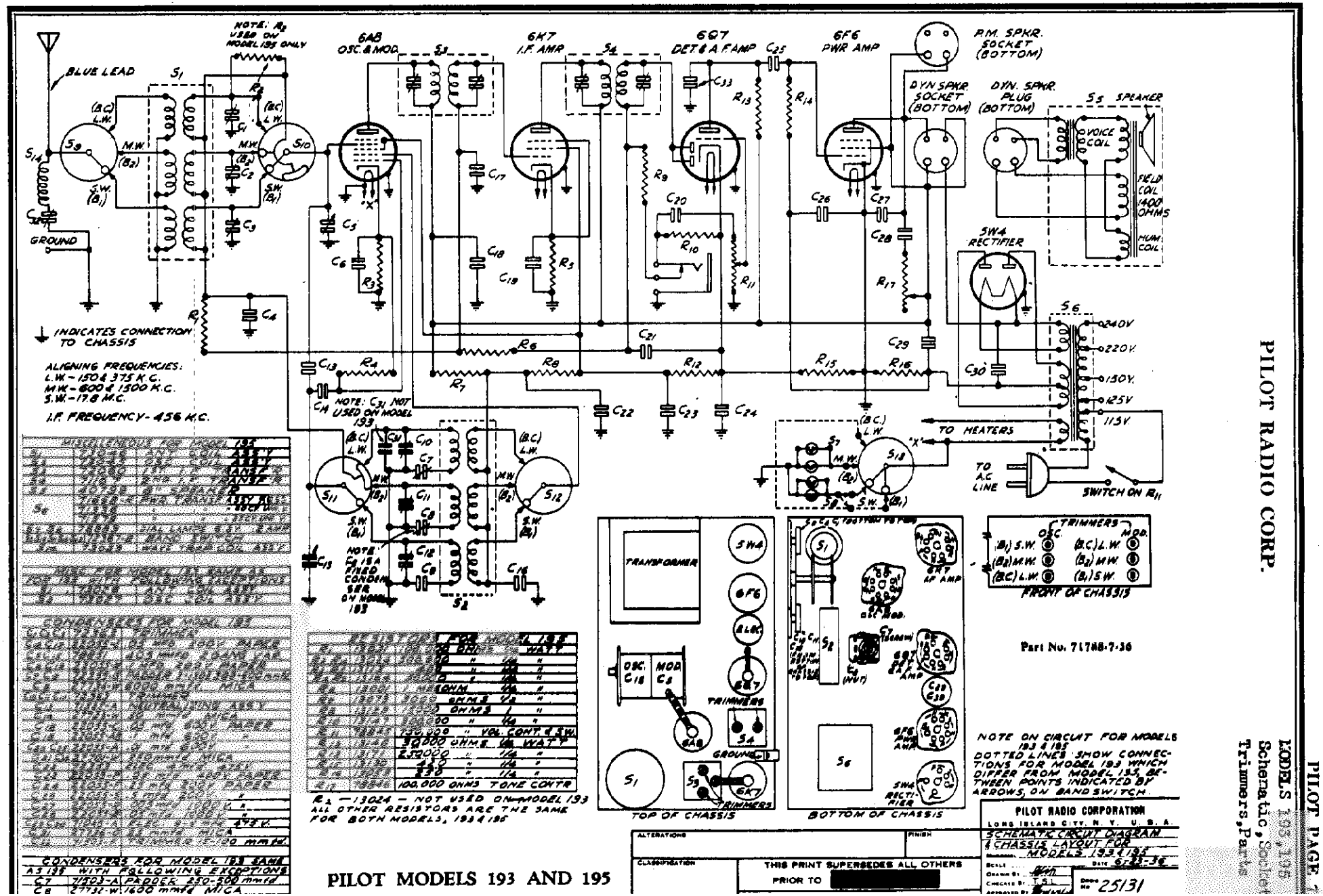

PILOT MODELS 193 AND 195

MODELS 193,195
Voltage, Alignment

PILOT RADIO CORP.

MODELS 253,255
Alignment

AC MODELS 193 and 195

(MODEL 195 IS SOLD OUTSIDE THE U. S. A. ONLY)

I. F. ALIGNMENT: When aligning the Intermediate Frequency Amplifier, the external oscillator must be set at 456 kc. The Band Switch should be in the position marked "Broadcast," and the tuning condenser should be set at maximum capacity. Connect the "antenna" lead of the external oscillator to the control grid of the type 6K7 tube in the I. F. Amplifier stage through a .1 mfd. fixed condenser. Connect the "ground" lead of the external oscillator to the receiver ground lead. The I. F. alignment capacitors are located at the top of the shielded I. F. Transformers. Rotate the adjusting screw of each capacitor on I. F. Unit No. 2 slowly until maximum output is noted. On completion of this operation, remove the external oscillator leads from the type 6K7 I. F. Amplifier tube and connect it in the same manner to the control grid at the top of the type 6A8 tube.

Now rotate each adjustment screw on I. F. Unit No. 1 for maximum output. During these operations, use the least possible input to prevent broadening of the resonance peaks.

In order to obtain the most accurate realignment of the I. F. Amplifier, it is essential to repeat the alignment process in both I. F. units with the external oscillator leads connected across the control grid of the 6A8 tube.

WAVE TRAP ADJUSTMENT: With the oscillator still set at 456 kc., connect the oscillator to the antenna and ground. Then adjust the wave trap condenser to minimum deflection on the output meter.

BROADCAST ALIGNMENT: After the I. F. Amplifier is completely realigned, connect the external oscillator leads to the receiver antenna and ground leads, through a .0002 mfd. condenser. Set the Band Switch in the "Broadcast" position and place the tuning control pointer at the 1500 kc. mark. Adjust the broadcast band oscillator trimmer to maximum response. Adjust the signal section trimmer in the same manner.

Next adjust the 600 kc. padder condenser. Set the external oscillator at 600 kc. Rotate the receiver tuning control until resonance is indicated. Then rock the tuning control back and forth about this resonance position, and at the same time adjust the padder condenser for the highest resonance peak.

Now repeat the 1500 kc. trimmer adjustment, following in every detail the procedure previously described.

ALIGNMENT OF THE SHORT-WAVE BANDS: The procedure in aligning the short-wave bands is identical with that for the broadcast with the exception of the adjustment of the padder condenser which is of fixed value and requires no adjustment. The alignment frequency is 16.6 Meters—(18,000 kc.)

Turn the Band Switch to the right. Tune the external oscillator to 16.6 meters. Tune the receiver so that the dial pointer is in a position coincidental with the 16.6 meter indication on the dial scale. Adjust the short wave oscillator trimmer for maximum response. Next adjust the signal circuit trimmer for maximum resonance. Repeat all adjustments to assure correct alignment, rocking the gang condenser to right or left for maximum gain.

Model 193 is aligned in the same manner at 6,000 kc. with the switch in Band 2 position.

LONG WAVE ALIGNMENT: Procedure in the Model 195 is similar to the Broadcast section of that receiver. Align at 375 kc. Adjust the padder at 160 kc.

Should it be necessary to remove the band switch assembly, it is advisable to realign the receiver after reinstalling.

Frequency Rating —50 to 60 cycles.
Power Consumption—60 Watts.
Tubes —1 type 6A8, 1 type 6K7, 1 type 6Q7, 1 type 6F6, 1 type 5W4.
Undistorted power output—3 watts.
Intermediate Frequency—456 kc.

VOLTAGES

The D. C. Voltages measured at the tube sockets of the set should be read with a high resistance voltmeter of at least 1000 ohms per volt.

	OSC. DET. Type 6A8	I. F. Type 6K7	POWER DIODE DET. Type 6Q7	PENTODE Type 6F6	RECTIFIER Type 5W4
Plate	230	230	105*	205	***
Cathode	4.	3.	1.5	**	
Screen	85	85	6.3	230	
Filament	6.3	6.3	6.3	6.3	

*Voltages measured through 250,000 ohm resistor.
Speaker field voltage 90 volts. All plate voltages measured to cathode. All screen voltages measured to cathode. All cathode voltages measured to chassis frame.

**Grid bias voltage for No. 42 tube obtained across R-16 (250 ohms resistor).
***Filament to chassis ground 315 volts D. C.
Anode grid of 6A7 to cathode—195 volts.

Models 253 and 255 All-Wave,

(MODEL 255 IS SOLD IN THE EUROPEAN AREA ONLY)

The location of the R. F. alignment trimmer condensers is on the side of the band switch. The trimmers in the lowest row are those for aligning Band 1. Those in the second row from the bottom are for Band 2. Those in the third row up are for the Broadcast. In the Model 255 there is an additional row of trimmers located immediately above those for the Broadcast.

The padder condenser is located under the rear section of the band switch. In the Model 255 an additional padder for the long wave range is located at the right of the Broadcast padder. Access to the padder condenser is made through a hole provided in the rear of the chassis frame.

I. F. ALIGNMENT: When aligning the Intermediate Frequency Amplifier, the external oscillator must be set at 456 kc. The Band Selector Switch should be in the position marked "Broadcast", and the tuning condenser should be set at maximum capacity. Connect the "antenna" lead of the external oscillator to the control grid of the type 6D6 tube in the I. F. Amplifier stage through a 1 mfd. fixed condenser. Connect the "ground" lead of the external oscillator to the receiver ground lead. The I. F. alignment capacitors are located at the side of the shielded I. F. Transformers. Rotate the adjusting screw of each capacitor on I. F. Unit No. 2 slowly until maximum output is noted. On completion of this operation, remove the external oscillator lead from the type 6D6 I. F. amplifier tube and connect it in the same manner to the control grid at the top of the type 6A7 tube.

Now rotate each adjustment screw on I. F. Unit No. 1 for maximum output. During these operations, use the least possible input to prevent broadening of the resonance peaks.

In order to obtain the most accurate realignment of the I. F. amplifier, it is essential to repeat the alignment process in both I. F. Units with the external oscillator leads connected across the control grid of the 6A7 tube.

BROADCAST ALIGNMENT:

See Models 193 & 195

ALIGNMENT OF THE SHORT WAVE-BANDS:—The procedure in aligning the short wave-bands is identical with that for the broadcast with the exception of the adjustment of the padder condenser. The alignment frequencies are as follows:

Band 2: 50 Meters—(6,000 kc.)
Band 1: 16.6 Meters—(18,000 kc.)

A 400 ohm resistor should be used in series with the antenna lead in place of the condenser used on Broadcast.

When aligning Band 2, set the Band Selector Switch in the position marked "Band 2." Set the tuning control pointer at 50 meters. Adjust the oscillator alignment capacitor on Band 2 for maximum output. Next adjust the interstage and antenna section alignment capacitors for maximum output.

To align Band 1, set the Band Selector Switch in the position marked "Band 1". Set the tuning control pointer at the 16.6 meter mark. Set the external oscillator at 16.6 meters. Adjust the oscillator section alignment capacitor on Band 1 for maximum output.

Proceed next to align the interstage section of Band 1. In doing this, it is essential to rock the tuning control back and forth about the resonance position and at the same time to adjust the trimmer for the highest resonance peak. Next align the antenna section for maximum sensitivity.

LONG WAVE MODEL 255

The above alignment positions refer to the Model 253 only, which is calibratted in frequency. The alignment points for the Model 255, which is calibrated in meters only, is as follows:

High Band	Align at 750 meters.
	Pad at 2,000 meters.
Broadcast	Align at 200 meters.
	Pad at 500 meters.
Band 2	Align at 49 meters.
Band 1	Align at 17 meters.

The Model No. 253 is an all wave superheterodyne receiver with a frequency range extending from 18,800 kc. to 545 kc. (16 meters to 550 meters). The Model No. 255 is similar to the Model No. 253 but has an additional long wave range embracing the wavelengths from 750 meters to 2000 meters (400 kc. to 150 kc.)

This receiver is designed to operate entirely from a six volt storage battery. A 100-ampere-hour battery is recommended. Connections to the battery are made by means of the RED and the BLACK rubber covered leads. A large clip is attached to each lead. Connect the RED lead to the POSITIVE terminal of the battery. Connect the BLACK lead to the NEGATIVE terminal.

CAUTION: BE CERTAIN OF THE POLARITY OF THE BATTERY BEFORE CONNECTING THE RECEIVER TO IT, OR SERIOUS DAMAGE TO THE RECEIVER MAY RESULT.

©John F. Rider Publisher

PILOT RADIO CORP.

MODELS 253, 255
Schematic, Socket
Trimmers, Voltage

For Alignment, see Index

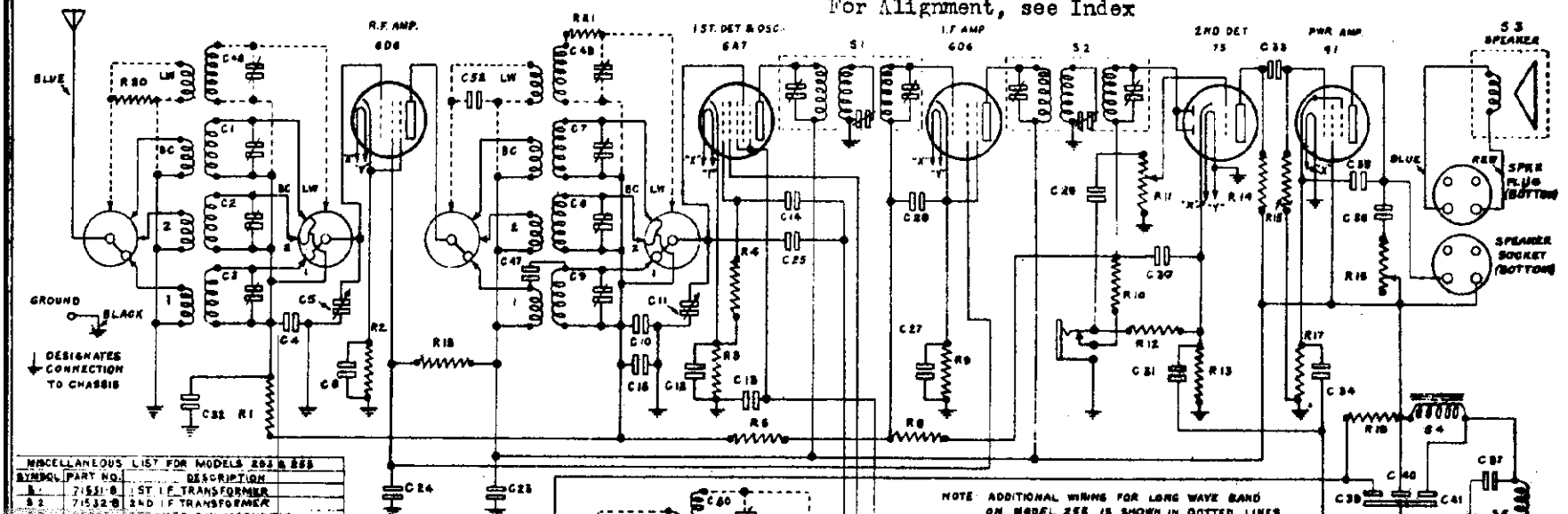

IF PEAK
456 KC.

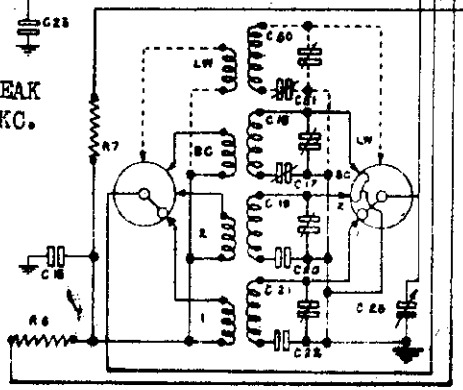

NOTE ADDITIONAL WIRING FOR LONG WAVE BAND ON MODEL 255 IS SHOWN IN DOTTED LINES

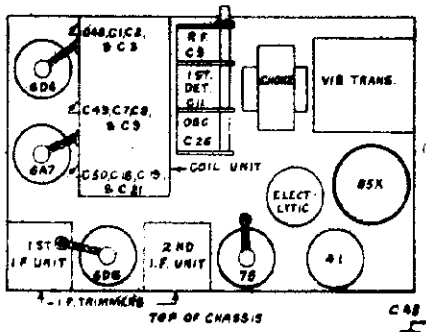

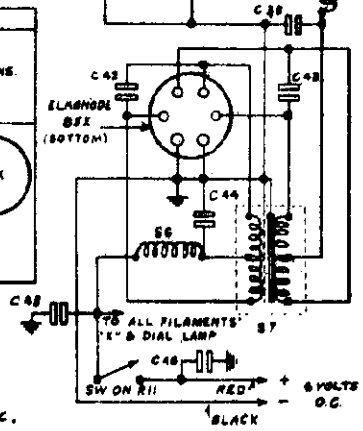

MISCELLANEOUS LIST FOR MODELS 253 & 255		
SYMBOL	PART NO.	DESCRIPTION
T1	71531-B	1ST I.F. TRANSFORMER
T2	71532-B	2ND I.F. TRANSFORMER
S3	40001	SPEAKER 8IN. MAGNETIC
L4	78622	FILTER CHOKE 8.5 HENRIES
L5	73024	R.F. CHOKE
L6	73023	R.F. CHOKE
G7	78623	VIBRATOR TRANSFORMER ASSY

NOTE: BAND SWITCH & GANG CONDENSER ASSY FOR MODEL 255 IS 71810-A & FOR MODEL 255 IS 71810-H.
CONDENSERS FOR MODEL 253

SYMBOL	PART NO.	DESCRIPTION
C1,C2,C7	70969-A	TRIMMER STRIP IN BAND SW HOUSING
C3	71811-A	0.05 MFD 200V PAPER
C4,C8,C9	71821	450 MMFDS 3 GANG VARIABLE
C5	71811-B	0.1 MFD. 200V PAPER
C6,C10,C11	70969-C	TRIMMER STRIP IN BAND SW HOUSING
C12	71811-C	0.05 MFD 200V PAPER
C13	71725-B	0.00005 MFD MICA
C14	71711-H	0.001 MFD MICA
C15	71811-D	250-500 MMFDS PADDER
C16,C17,C18	70969-D	TRIMMER STRIP IN BAND SW HOUSING
C19	71725-H	1370 MMFDS MICA
C20	71725-N	2870 MMFDS MICA
C21	71811-E	0.5 MFD 200V PAPER
C22	71811-H	0.1 MFD 200V PAPER
C23	71811-G	NEUTRALIZING CONDENSER
C24,C25	71811-A	0.01 MFD 600V PAPER
C26	71725-H	0.00025 MFD MICA
C27	71811-K	10 MFDS 25V ELECTROLYTIC
C28	71811-R	0.005 MFD 1000V PAPER
C29	71811-C	0.05 MFD 200V PAPER
C30	71811-F	0.1 MFD 200V PAPER
C31	71811-K	4 MFDS 400V ELECTROLYTIC
C32,C33	71811-K	8 MFDS 450V ELECTROLYTIC
C34	71811-S	0.1 MFD 600V PAPER
C35,C36	71811-B	0.1 MFD 200V PAPER
C37	71811-C	0.05 MFD 200V PAPER
C38	71725-B	0.00005 MFD MICA

CONDENSERS FOR MODEL 255
SAME AS FOR MODEL 253 WITH FOLLOWING CHANGES

C1,C2,C3,C48	70969-A	TRIMMER STRIP IN BAND SW HOUSING
C4,C8,C9,C49	70969-A	TRIMMER STRIP IN BAND SW HOUSING
C17,C51	71877-C	DUAL PADDER 250-500 & 30-150MMFDS
C6,C10,C11,C50	70969-B	TRIMMER STRIP IN BAND SW HOUSING
C52	2770-0	0.00025 MFD MICA

RESISTORS FOR MODEL 253		
SYMBOL	PART NO.	DESCRIPTION
R1,R5	3103	100,000 OHMS 1/4 WATT CARBON
R2,R3,R9	13115	400 OHMS 1/4 WATT CARBON
R4,R10	3164	50,000 OHMS 1/4 WATT CARBON
R6	3068	30,000 OHMS 1/2 WATT CARBON
R7	3086	2,000 OHMS 1/2 WATT CARBON
R8	3001	1MEGOHM 1/4 WATT CARBON
R11	78647	750,000 OHMS VOLUME CON & SW
R12	3147	300,000 OHMS 1/4 WATT CARBON
R13	3118	18,000 OHMS 1/4 WATT CARBON
R14	3117	250,000 OHMS 1/4 WATT CARBON
R15	13024	500,000 OHMS 1/4 WATT CARBON
R16	78648	100,000 OHMS TONE CONTROL
R17	3187	1,000 OHMS 1 WATT CARBON
R18,R19	13052	5,000 OHMS 1/2 WATT CARBON

RESISTORS FOR MODEL 255
SAME AS FOR MODEL 253 WITH ADDITIONS BELOW

R20	3164	50,000 OHMS 1/4 WATT CARBON
R21	13029	490 OHMS 1/4 WATT CARBON

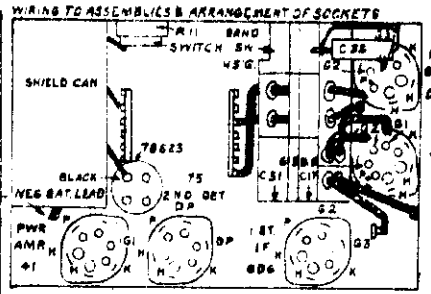

ALIGNING FREQUENCIES
LONG WAVE - 400 & 161 K.C
BROADCAST - 1500 & 600 K.C
BAND 2 - 6 MEGACYCLES
BAND 1 - 18

VOLTAGES

D.C. voltages should be read at the tube sockets with a high resistance voltmeter.

	R.F. 6D6	Osc.Det. 6A7	I.F. 6D6	Diode 75	Pent. 41
Plate	155	135	155	80	118
Cath.	4	1.8	4	1	10
Screen	100	85	100	—	125
Fil.	6	6	6	6	6

PILOT RADIO CORP.

MODELS 393,395
Schematic,Parts

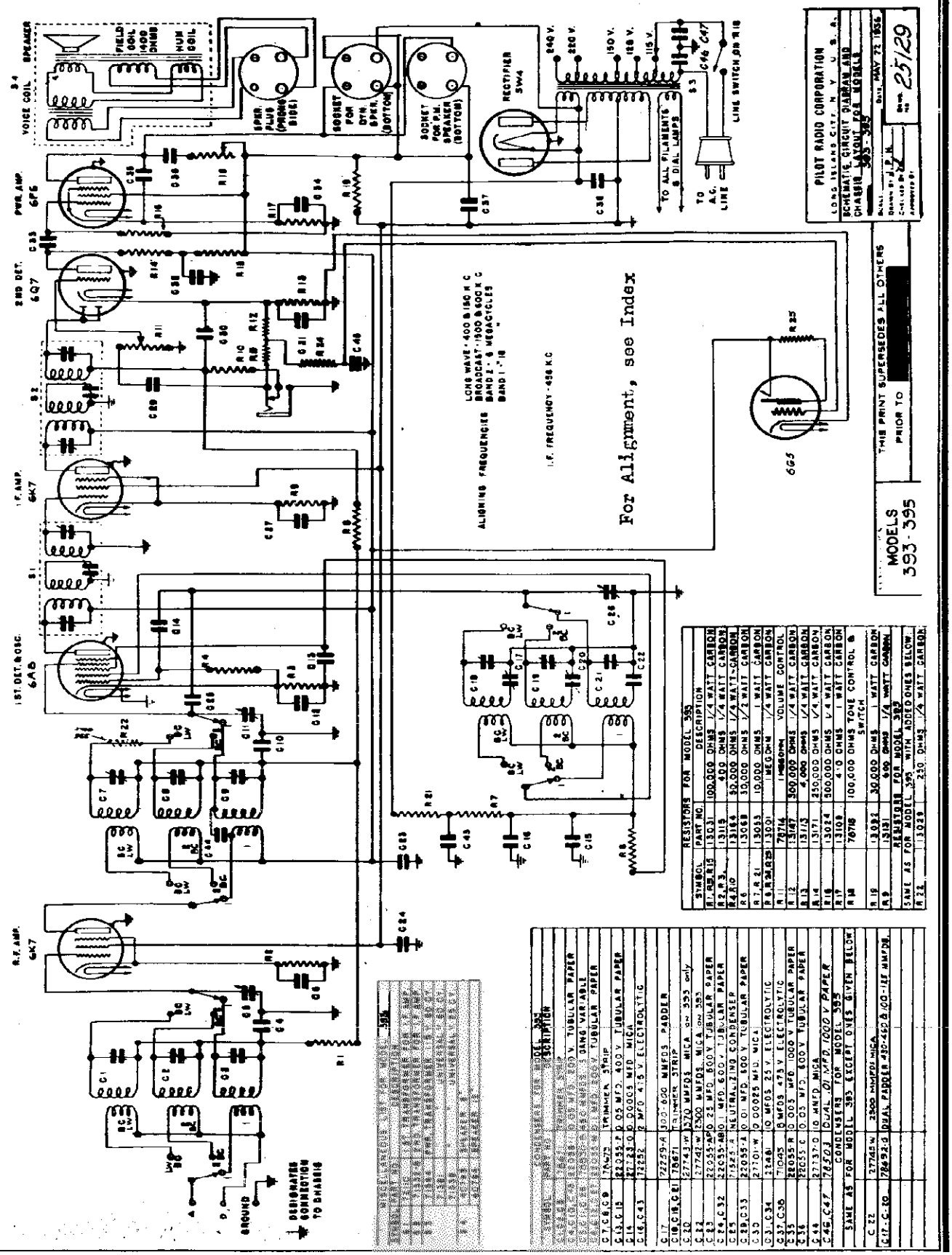

SYMBOL	PART NO.	DESCRIPTION
R1, R8, R15	13031	100,000 OHMS 1/4 WATT CARBON
R2, R3, R4, R10	13115	400 OHMS 1/4 WATT CARBON
R5	13164	50,000 OHMS 1/4 WATT CARBON
R6	13068	30,000 OHMS 1/2 WATT CARBON
R7, R21	13033	10,000 OHMS 1 WATT CARBON
R9, R23, R25	13001	1 MEGOHM 1/4 WATT CARBON
R11	78714	1 MEGOHM VOLUME CONTROL
R12	13147	350,000 OHMS 1/4 WATT CARBON
R13	13113	4,000 OHMS 1/4 WATT CARBON
R14	1317	250,000 OHMS 1/4 WATT CARBON
R16	13024	500,000 OHMS 1/4 WATT CARBON
R17	13108	40 OHMS 1 WATT CARBON
R18	78718	100,000 OHMS TONE CONTROL & SWITCH
R19	13021	30,000 OHMS 1 WATT CARBON
R9	13131	900 OHMS 1/4 WATT CARBON

RESISTORS FOR MODEL 393

SAME AS FOR MODEL 395 WITH ADDED ONES BELOW

R 22	13029	250 OHMS 1/4 WATT CARBON

C 1	22259-A	100-600 MMFD PADDER
C10, C16, C21	78671	TRIMMER STRIP
C 10	27743-W	1570 MMFD MICA ON 393 only
C 12	27742-W	2500 MMFD MICA ON 393
C 23	22055-AP	0.25 MFD 600 V TUBULAR PAPER
C 24, C 32	22055-AB	0.1 MFD 600 V TUBULAR PAPER
C 25	11525-A	NEUTRALIZING CONDENSER
C 28, C 33	22055-A	0.01 MFD 600 V TUBULAR PAPER
C 30	27701-W	0.00025 MFD MICA
C 31, C 34	21468	10 MFDS 25 V. ELECTROLYTIC
C 37, C 38	71045	8 MFDS 475 V. ELECTROLYTIC
C 35	22055-R	0.005 MFD 1000 V TUBULAR PAPER
C 36	22055-C	0.05 MFD 600 V TUBULAR PAPER
C 44	27737-D	110 MMFD MICA
C 46, C 47	78504	DUAL .01 MFD 1000 V PAPER

CONDENSERS FOR MODEL 393

SAME AS FOR MODEL 393 EXCEPT ONES GIVEN BELOW

C 22	27745-W	2300 MMFD MICA
C 17, C 20	78692-D	DUAL PADDER 430-460 & 800-1515 MMFD.

PILOT RADIO CORP.

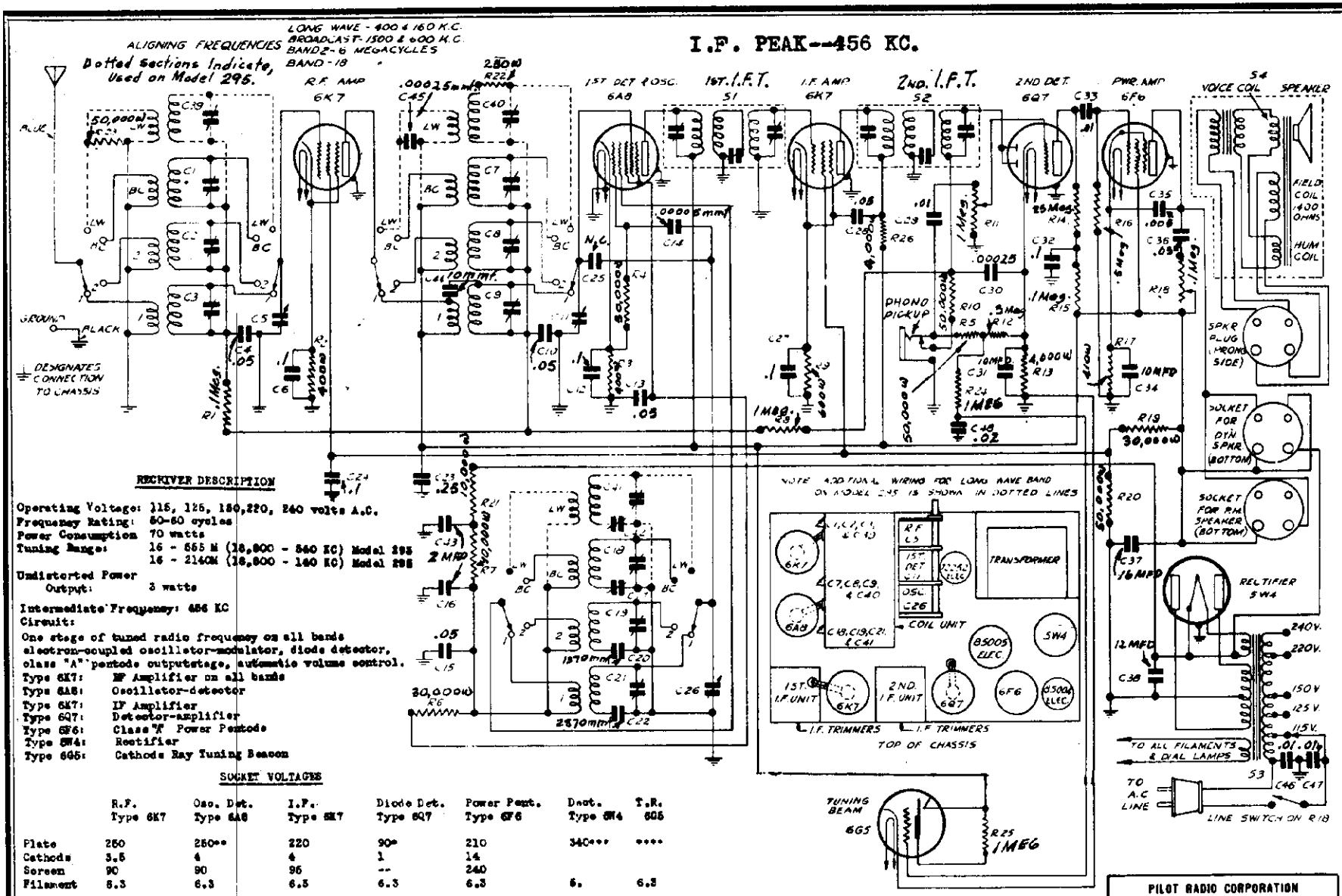

RECEIVER DESCRIPTION

Operating Voltage: 115, 125, 180, 220, 240 volts A.C.
Frequency Rating: 50-60 cycles
Power Consumption 70 watts
Tuning Range: 16 - 555 M (18,800 - 540 KC) Model 293
16 - 214M (18,800 - 140 KC) Model 295

Undistorted Power Output: 3 watts

Intermediate Frequency: 456 KC

Circuit:
One stage of tuned radio frequency on all bands electron-coupled oscillator-modulator, diode detector, class "A" pentode outputstage, automatic volume control.

Type 6K7: RF Amplifier on all bands
Type 6A8: Oscillator-detector
Type 6K7: IF Amplifier
Type 6Q7: Detector-amplifier
Type 6F6: Class "A" Power Pentode
Type 5W4: Rectifier
Type 6G5: Cathode Ray Tuning Beacon

SOCKET VOLTAGES

	R.F. Type 6K7	Osc. Det. Type 6A8	I.F. Type 6K7	Diode Det. Type 6Q7	Power Pent. Type 6F6	Rect. Type 5W4	T.R. 6G5
Plate	250	250**	220	90*	210	340***	****
Cathode	3.5	4	4	1	14		
Screen	90	90	95	--	240		
Filament	6.3	6.3	6.3	6.3	6.3	6.	6.3

D.C. Voltages measured at the tube sockets should be read with a high resistance voltmeter of at least 1000 ohms per volt.
Plate and Screen Voltages measured to cathode. Cathode Voltages measured to chassis. Speaker Field Voltage 90 volts.

* Measured through 350000 ohms.
** Anode Grid of 6A8 tube 180 volts
*** Measured from filament to chassis.
**** Target voltage 260 volts.

D 27737-Q WAS 27737 C
ALTERATIONS: CATHODE OF 6Q7 WAS CONNECTED TO CATHODE OF 6E5. 6G5 WAS 6E5. C48 VALUE ADDED; CATHODE REMOVED FROM 5W4
FINISH
CLASSIFICATION: MODELS 293-295
THIS PRINT SUPERSEDES ALL OTHERS PRIOR TO [redacted]
DO NOT SCALE THIS PRINT

PILOT RADIO CORPORATION
LONG ISLAND CITY N. Y. U. S. A.
SCHEMATIC CIRCUIT DIAGRAM AND CHASSIS LAYOUT FOR MODELS 293-295
Scale
Date 5/29-1936
Drawn By
Checked By
Approved By
Dwg No 25128-3

PILOT RADIO CORP.

Model 293
16 - 550 m. (18,800 - 545 kc.)

Model 295
16 - 550 m. (18,800 - 545 kc.)
750 - 2000 m. (400 - 150 kc.)

(MODEL 295 IS SOLD OUTSIDE THE U. S. A. ONLY)

REMOVAL OF CHASSIS FROM CABINET:

To remove the chassis from the cabinet proceed as follows:

Be certain that the line cord is removed from the power outlet socket.

Remove the "slip-on" knobs and felt washers from the controls and loosen the set screw on the tuning knob.

Remove the speaker plug from the socket at the rear of the chassis.

Remove the four mounting screws, located underneath the cabinet.

Remove the tuning beam plug from the socket at the front of the chassis.

REALIGNMENT: Should the receiver require realignment, the procedure outlined below should be followed. For best results an external modulated oscillator with adequate frequency range, and a visual output meter, should be used.

Before connecting the chassis to the power line, reconnect the speaker cable in its socket at the rear of the chassis.

The location of the R. F. alignment trimmer condensers is on the side of the band switch. The trimmers in the lowest row are those for aligning Band 1. Those in the second row from the bottom are for Band 2. Those in the third row up are for the Broadcast. In the Model 295 there is an additional row of trimmers located immediately above those for the Broadcast.

The padder condenser is located under the rear section of the band switch. In the Model 295 an additional padder for the long wave range is located at the right of the Broadcast padder. Access to the padder condenser is made through a hole provided in the rear of the chassis frame.

I. F. ALIGNMENT: When aligning the Intermediate Frequency Amplifier, the external oscillator must be set at 456 kc. The Band Selector Switch should be in the position marked "Broadcast", and the tuning condenser should be set at maximum capacity. Connect the "antenna" lead of the external oscillator to the control grid of the type 6K7 tube in the I. F. Amplifier stage through a .1 mfd. fixed condenser. Connect the "ground" lead of the external oscillator to the receiver ground lead. The I. F. alignment capacitors are located at the side of the shielded I. F. Transformers. Rotate the adjusting screw of each capacitor on I. F. Unit No. 2 slowly until maximum output is noted. On completion of this operation, remove the external oscillator lead from the type 6K7 I. F. amplifier tube and connect it in the same manner to the control grid at the top of the type 6A8 tube.

Now rotate each adjustment screw on I. F. Unit No. 1 for maximum output. During these operations, use the least possible input to prevent broadening of the resonance peaks.

In order to obtain the most accurate realignment of the I. F. amplifier, it is essential to repeat the alignment process in both I. F. Units.

BROADCAST ALIGNMENT: After the I. F. amplifier is completely realigned, connect the external oscillator leads to the receiver antenna and ground leads. Insert a 200 mmf. condenser in series with the antenna lead. Set the Band Selector Switch in the "Broadcast" position and place the tuning control pointer at the 1500 kc. mark. Adjust the broadcast band oscillator trimmer.

Next adjust the interstage alignment trimmer for maximum response. Finally adjust the antenna section trimmer in the same manner.

Next adjust the 600 kc. padder condenser, located in the lower rear section of the band switch, under the chassis. Set the external oscillator at 600 kc. Rotate the receiver tuning control until resonance is indicated. Then rock the tuning control back and forth about this resonance position, and at the same time adjust the padder condenser for the highest resonance peak.

Now repeat the 1500 kc. trimmer adjustment, following in every detail the procedure previously described.

ALIGNMENT OF THE SHORT WAVE-BANDS:– The procedure in aligning the short wave-bands is identical with that for the broadcast with the exception of the adjustment of the padder condenser. Insert a 400 ohm non-inductive resistor in series with the antenna lead. The alignment frequencies are as follows:

Band 2: 50 Meters—(6,000 kc.)
Band 1: 16.6 Meters—(18,000 kc.)

When aligning Band 2, set the Band Selector Switch in the position marked "Band 2". Set the tuning control pointer at 50 meters. Adjust the oscillator alignment capacitor on Band 2 for maximum output. Next adjust the interstage and antenna section alignment capacitors for maximum output.

To align Band 1, set the Band Selector Switch in the position marked "Band 1". Set the tuning control pointer at the 16.6 meter mark. Set the external oscillator at 16.6 meters. Adjust the oscillator section alignment capacitor on Band 1 for maximum output.

Proceed next to align the interstage section of Band 1. In doing this, it is essential to rock the tuning control back and forth about the resonance position and at the same time to adjust the trimmer for the highest resonance peak. Next align the antenna section for maximum sensitivity.

LONG WAVE MODEL 295

The above alignment positions refer to the Model 293 only, which is calibrated in frequency. The alignment points for the Model 295, which is calibrated in meters only, is as follows:

Long Wave	Align at 750 meters.
	Pad at 2,000 meters.
Broadcast	Align at 200 meters.
	Pad at 500 meters.
Band 2	Align at 49 meters.
Band 1	Align at 17 meters.

The Long Wave alignment procedure is similar to that for the Broadcast. A 200 mmf. condenser should be used in series with the antenna lead in aligning this band.

REMOVAL OF BAND SELECTOR SWITCH ASSEMBLY: Should it be necessary to remove the switch assembly, this is easily done by removing the supporting screws. Before doing this, however, it is essential to unsolder the leads between the switch and the chassis.

It is advisable to realign the receiver after reinstalling the switch assembly.

CAUTION: When making repairs on the receiver, use only ROSIN CORE SOLDER. NEVER USE SOLDERING PASTE OR ACID FLUXES OF ANY TYPE.

©John F. Rider. Publisher

MODELS 304,305
Schematic, Parts

PILOT RADIO CORP.

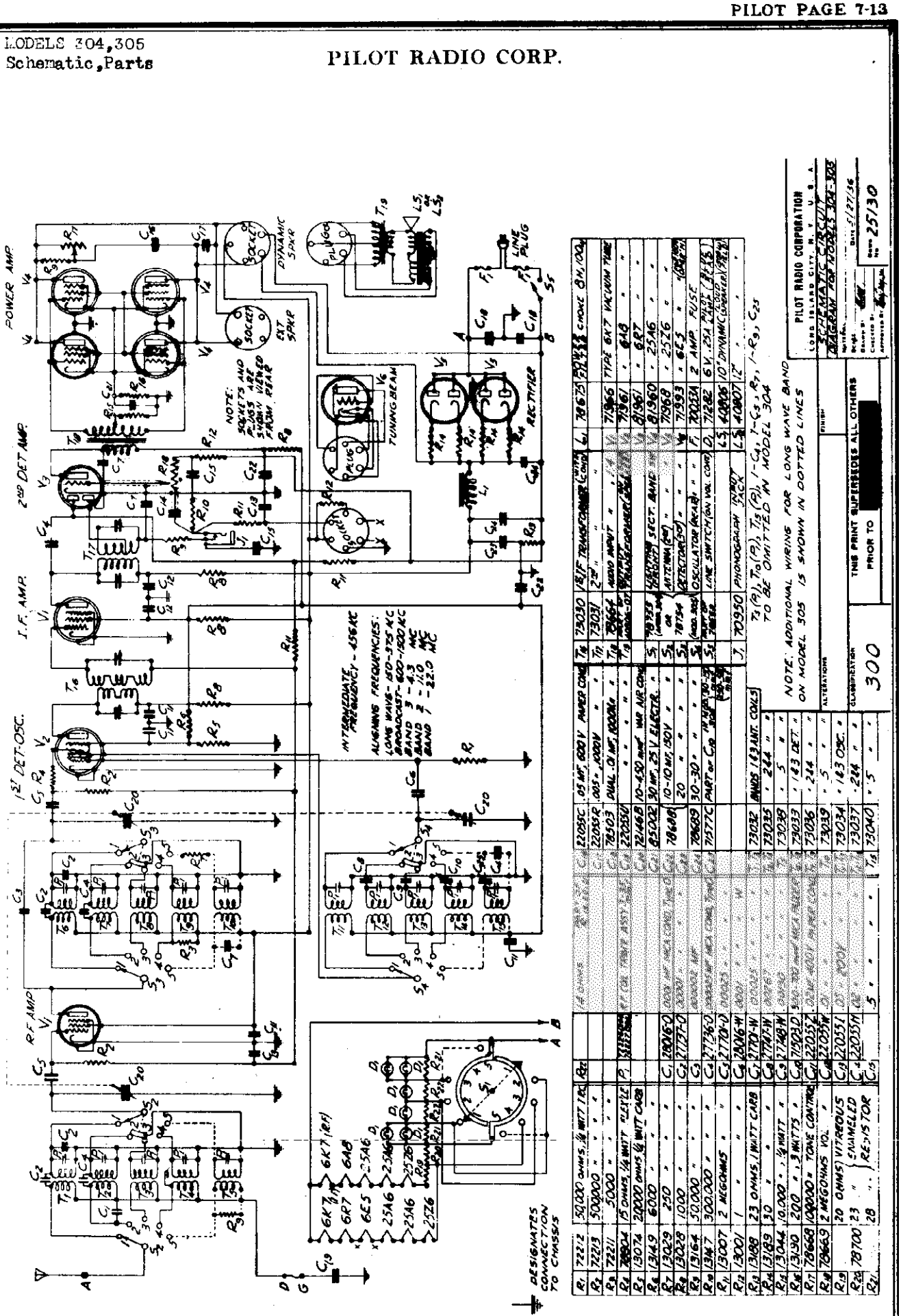

R1	72212	50,000 OHMS, ½ WATT	R22				C1	22055C	.05 MF, 600 V. PAPER CONT.	T16	73030	I.F. TRANSFORMER (456 KC)	L1	78625	POWER CHOKE 8H./100 MA.		
R2	72213	500,000 " " "					C2	22055E	.005 " 400 V. " "	T17	73031	2ND " " "					
R3	72211	5000 " " "					C3	78503	DUAL .01 MF. 400 V. " "	T18	78664	AUDIO INPUT " "		71366	TYPE 6K7 VACUUM TUBE		
R4	78604	15 OHMS, ½ WATT "FLAT"	P1	22055D			C4	22055D	" " " " " "	T19	78665	AUDIO OUTPUT " "		7196	" 6A8 " "		
R5	13074	20,000 OHMS ½ WATT CARB.					C5	72146B	10-450 MMF. VAR. AIR COND.	S1	78755	1ST SECT. BAND SELECTOR SW.		81961	" 6B7 " "		
R6	13429	6000 " " "					C6	85002	30 MF. 25 V. ELECTR. "	S2	78756	2ND " " " "		81960	" 25A6 " "		
R7	13029	250 " " "	C1	28065D			C7	78668	10-10 MF. 150 V. " "	S3	78757	3RD " " " "		71968	" 25Z6 " "		
R8	13028	1000 " " "	C2	27797-D			C8		20 " " " "	S4	78758	ANTENNA (SW) " "	V	71933	" 6C5 " "		
R9	13164	50,000 " " "	C3				C9	78689	30-30 " " " "	S5	78759	OSCILLATOR (SW) " "	F	70034	2 AMP FUSE		
R10	1347	300,000 " " "	C4	27736D			C10	75777C	PART OF C9 " " "	S6	78760	LINE SWITCH (ON VOL. CONT.)	O1	71682	6 V. .25A PILOT (#47)		
R11	13007	2 MEGOHMS " " "	C5	27770-D									L5	40006	10" DYNAMIC (2500Ω FIELD)		
R12	13001	1 " " "	C6	28066-W			C11	73032	BANDS 1 & 2 ANT. COILS	J1	70950	PHONOGRAPH JACK	L2	40007	12" " "		
R13	13088	23 OHMS, 1 WATT CARB.	C7	27770-W			C12	73035	" 244 " "								
R14	13089	30 " " "	C8	27741-W			C13	73038	" 5 " "								
R15	13044	10,000 " ½ WATT "	C9	27740-W			C14	73033	" 143 DET. "								
R16	1390	200 " 3 WATTS "	C10	27702D			C15	73036	" 214 " "								
R17	78668	100,000 " TONE CONTROL	C11	22055E			C16	73039	" 5 " "								
R18	70663	2 MEGOHMS VOL. "	C12	22055W			C17	73034	" 143 OSC. "								
R19		20 OHMS VITREOUS	C13	22055I			C18	73037	" 244 " "								
R20	78700	23 " } ENAMELLED	C14	22055M			C19	73040	" 5 " "								
R21		28 " } RESISTOR	C15														

©John F. Rider, Publisher

MODEL Wasp 3-SW
Schematic
MODELS 304,305
Voltage,Alignment

PILOT RADIO CORP.

MODELS 393,395
Alignment

Pilot engineers recommend the doublet antenna. To connect this set to a doublet, first remove the link across the D and G terminals at the rear of the chassis. Then connect one wire of the doublet lead to post A, and the other wire to post D.

If you use a single-wire antenna, leave the link across D and G. Connect the lead-in to A, and the ground wire to either D or G.

PILOT MODELS 304 AND 305

MODEL 305 IS SOLD OUTSIDE THE U. S. A. ONLY

Type of Circuit — All wave Superheterodyne with TRF stage on all bands, A. V. C. Class "A" push pull parallel power output stage.

Undistorted power output—4 watts.
I. F.—456 kc.

VOLTAGES

The D. C. Voltages measured at the tube sockets of the set should be read with a high resistance voltmeter of at least 1,000 ohms per volt.

	R.F. 6K7	Osc. & 1st Det. 6A8	I.F. 6K7	2nd Det. & Amp. 6R7	Pwr. Pent. 25A6	Pwr. Pent. 25A6	Pwr. Pent. 25A6	Rect. 25Z6	Rect. 25Z6	T.B. 6E5
Plate	91	80	85	79	86	80	80	—	—	%
Screen	91	49	80		86	90	90	99	99	
Cathode	0	—	0	—	12.5	12.5	12.5	99	99	—
Filament	6.3	6.3	6.3	6.3	25	25	25	26	26	6.3

Speaker field—99 Volts. Tuning Beam—Target 90 volts to ground.

A 6E5 tuning beam should be plugged into the tuning beam socket on the chassis, whenever the receiver is operated outside the cabinet.

* Measured through 1 megohm.

I. F. ALIGNMENT: When aligning the Intermediate Frequency Amplifier, the external oscillator must be set at 456 kc. The Band Switch should be in the position marked "Broadcast", and the tuning condenser should be set at maximum capacity. When aligning the receiver on all positions, the volume control and the tone control should be turned to the maximum clockwise position. Connect the antenna lead of the external oscillator to the control grid of the 6K7 tube in the I. F. Amplifier through a .1 mfd. fixed condenser. Connect the ground lead of the external oscillator to the chassis. The I. F. alignment trimmers are located at the top of the shielded I. F. Transformers. Rotate the adjusting screw of each capacitor on I. F. Unit No. 2 slowly until maximum output is noted. Following this, connect the external oscillator leads to the control grid of the 6A8 tube. Adjust each trimmer on I. F. Unit No. 1 for maximum gain.

During these operations, use the least possible input to prevent broadening of the resonance peaks.

In order to obtain the most accurate realignment of the I. F. amplifier, it is essential to repeat the alignment process in all I. F. Units, with the external oscillator leads connected to the control grid of the 6A8 tube.

BROADCAST ALIGNMENT: After the I. F. amplifier is completely realigned, connect the external oscillator leads to the receiver antenna and ground leads through a .0002 mfd. condenser. Leave the Band Switch in the "Broadcast" position and place the tuning control pointer at the 1500 kc. mark. Tune the external oscillator to 1500 kc. Adjust the broadcast band oscillator trimmer to maximum response.

Next adjust the intermediate alignment trimmer for maximum response. Finally adjust the antenna section trimmer in the same manner.

Next adjust the 600 kc. padder condenser, located in the lower rear partition of the band switch, under the chassis. Set the external oscillator at 600 kc. Rotate the receiver tuning control to the resonance position, and at the same time adjust the padder condenser for the highest peak.

Now repeat the 1500 kc. trimmer adjustments, following in every detail the procedure previously described.

The alignment frequencies are as follows:

Band 4—150 and 375 kc.—1000 and 800 m.
Band 4—600 and 1500 kc.—500 and 200 m.
Band 3—6.97 meter—43,000 kc.
Band 2—17.2 meter—17,000 kc.
Band 1—13.6 meter—22,000 kc.

When aligning Band 3, set the Band Switch in the position marked Band 3. Rotate the tuning condenser to the 4300 kc. indication on the dial scale. Set the external oscillator at 4300 kc. Adjust the Band 3 oscillator trimmer for maximum sensitivity. Next adjust the intermediate and antenna trimmer condensers for maximum sensitivity. Check the overall sensitivity of the band at several points along the dial scale.

Align Band 2 in a similar manner using a 400-ohm non-inductive resistor in place of the .0002 mfd. condenser. The alignment frequency is 17,000 kc. (17.2 meters).

The alignment of Band 1 requires greater care due to the higher frequencies covered by this band. The tracking characteristic of Band 1 of this receiver differs from that of the other bands, in that the 1st detector and T.R.F. circuits resonate on the high frequency side of the oscillator. This condition applies only to Band 1. The alignment frequency is 22,000 kc. or 13.6 meters. Set the external oscillator at 22,000 kc. Rotate the tuning condenser of the receiver until the dial pointer is co-incidental with the 22,000 kc. indication on the dial scale. Adjust the oscillator trimmer condenser for maximum sensitivity. Proceed next to align the intermediate section. In doing this it is essential to rock the tuning control back and forth about the resonance position and at the same time to adjust the trimmer for the highest resonant peak. Next align the antenna section for minimum sensitivity.

Part No. 71706-6-36

THE LONG WAVE ALIGNMENT procedure in the Model 305 is similar to that of the broadcast. Turn the Band Switch to the Long Wave position. The alignment frequency is 375 kc. Adjust the padder condenser at 150 kc. Use a .0002 mfd. condenser in the antenna lead from the external oscillator.

Pilot engineers recommend the doublet antenna. When using a doublet, connect one lead-in wire to the blue lead at the rear of the set, and the other one to the yellow lead. Next, connect the black lead to the ground.

If you use an ordinary single-wire antenna, connect the antenna to the blue lead on the set. Then connect the yellow and black leads together, and to the ground.

PHONOGRAPH PICK-UP: A jack is provided at the rear of the chassis for plugging in an electric phonograph pick-up, in order that records can be reproduced by the loudspeaker, through the high-quality amplifier with which this set is equipped. The pick-up should be of the high-impedance type.

EXTRA SPEAKER: At the rear of the chassis there is a socket for plugging in an extra speaker, which can be located in the kitchen, in one of your upstairs rooms, or down cellar in the game room. This will give you the equivalent of an extra radio, at the small expense of the extra speaker and cord. We recommend a permanent magnet dynamic speaker of 10,000 ohms. These speakers operate without any field exciting current.

PILOT MODELS 393 AND 395

MODEL 395 IS SOLD OUTSIDE THE U. S. A. ONLY

LONG WAVE MODEL 395

The location of the R. F. alignment trimmer condensers is at the right end of the chassis underneath the deck.

I. F. ALIGNMENT: When aligning the Intermediate Frequency Amplifier, the external oscillator must be set at 456 kc. The Band Selector Switch should be in the position marked "Broadcast", and the tuning condenser should be set at maximum capacity. Connect the "antenna" lead of the external oscillator to the control grid of the type 6K7 tube in the I. F. Amplifier stage through a .1 mfd. fixed condenser. Connect the "ground" lead of the external oscillator to the receiver ground lead. The I. F. alignment capacitors are located at the side of the shielded I. F. Transformers. Rotate the adjusting screw of each capacitor on I. F. Unit No. 2 slowly until maximum output is noted. On completion of this operation, remove the external oscillator lead from the type 6K7 I. F. amplifier tube and connect it in the same manner to the control grid at the top of the type 6A8 tube.

Now rotate each adjustment screw on I. F. Unit No. 1 for maximum output. During these operations, use the least possible input to prevent broadening of the resonance peaks.

In order to obtain the most accurate realignment of the I. F. amplifier, it is essential to repeat the alignment process in both I. F. Units.

BROADCAST ALIGNMENT: After the I. F. amplifier is completely realigned, connect the external oscillator leads to the receiver antenna and ground leads. Insert a 200 mmf. condenser in series with the antenna lead. Set the Band Selector Switch in the "Broadcast" position and place the tuning control pointer at the 1500 kc. mark. Adjust the broadcast oscillator trimmer.

Next adjust the intermediate alignment trimmer for maximum response. Finally adjust the antenna section trimmer in the same manner.

Next adjust the 600 kc. padder condenser, located on the top of the oscillator coil. Set the external oscillator at 600 kc. Rotate the receiver tuning control until resonance is indicated. Then rock the tuning control back and forth about this resonance position, and at the same time adjust the padder condenser for the highest resonance peak.

Now repeat the 1500 kc. trimmer adjustment, following in every detail the procedure previously described.

ALIGNMENT OF THE SHORT WAVE-BANDS—The procedure in aligning the short wave-bands is identical with that for the broadcast with the exception of the adjustment of the padder condenser. Insert a 400 ohm non-inductive resistor in series with the antenna lead. The alignment frequencies are as follows:

Band 2: 50 Meters—(6,000 kc.)
Band 1: 16.6 Meters—(18,000 kc.)

When aligning Band 2, set the Band Selector Switch in the position marked "Band 2". Set the tuning control pointer at 50 meters. Adjust the oscillator alignment capacitor on Band 2 for maximum output. Next adjust the intermediate and antenna section alignment capacitors for maximum output.

To align Band 1, set the Band Selector Switch in the position marked "Band 1." Set the tuning control pointer at the 16.6 meter mark. Set the external oscillator at 16.6 meters. Adjust the oscillator section alignment capacitor on Band 1 for maximum output.

Proceed next to align the intermediate section of Band 1. In doing this, it is essential to rock the tuning control back and forth about the resonance position, and at the same time to adjust the trimmer for the highest resonance peak. Next align the antenna section for maximum sensitivity.

ASSEMBLY NOTES: Front panel 7x14 inches, base panel 7x13 inches. Mount base panel with No. 33 PILOT brackets, with top of base panel 1¼ inches above bottom of front panel. Make all leads as short as possible.

To control regeneration on short waves, put upper midget condenser at zero, and adjust with lower midget. Use same method on broadcast waves, but put upper midget at full capacity. Use PILOT plug-in coil as follows: Red ring, 20-meter band; Orange ring, 40-meter band; Yellow ring, 80-meter band; Green ring, 160-meter band; Blue ring, broadcast band.

Long Wave Align at 750 meters.
Find at 2,000 meters.
Broadcast Align at 200 meters.
Find at 500 meters.
Band 2 Align at 49 meters.
Band 1 Align at 17 meters.

The Long Wave alignment procedure is similar to that for the Broadcast. A 200 mmf. condenser should be used in series with the antenna lead in aligning this band.

For Phonograph Pick-up & Extra Speaker Data See Models 304 & 305

APRIL 1938

PILOT WASP

10,000 MILE SHORT WAVE RECEIVER. TYPE 3-SW
17 TO 500 METERS

©John F. Rider, Publisher

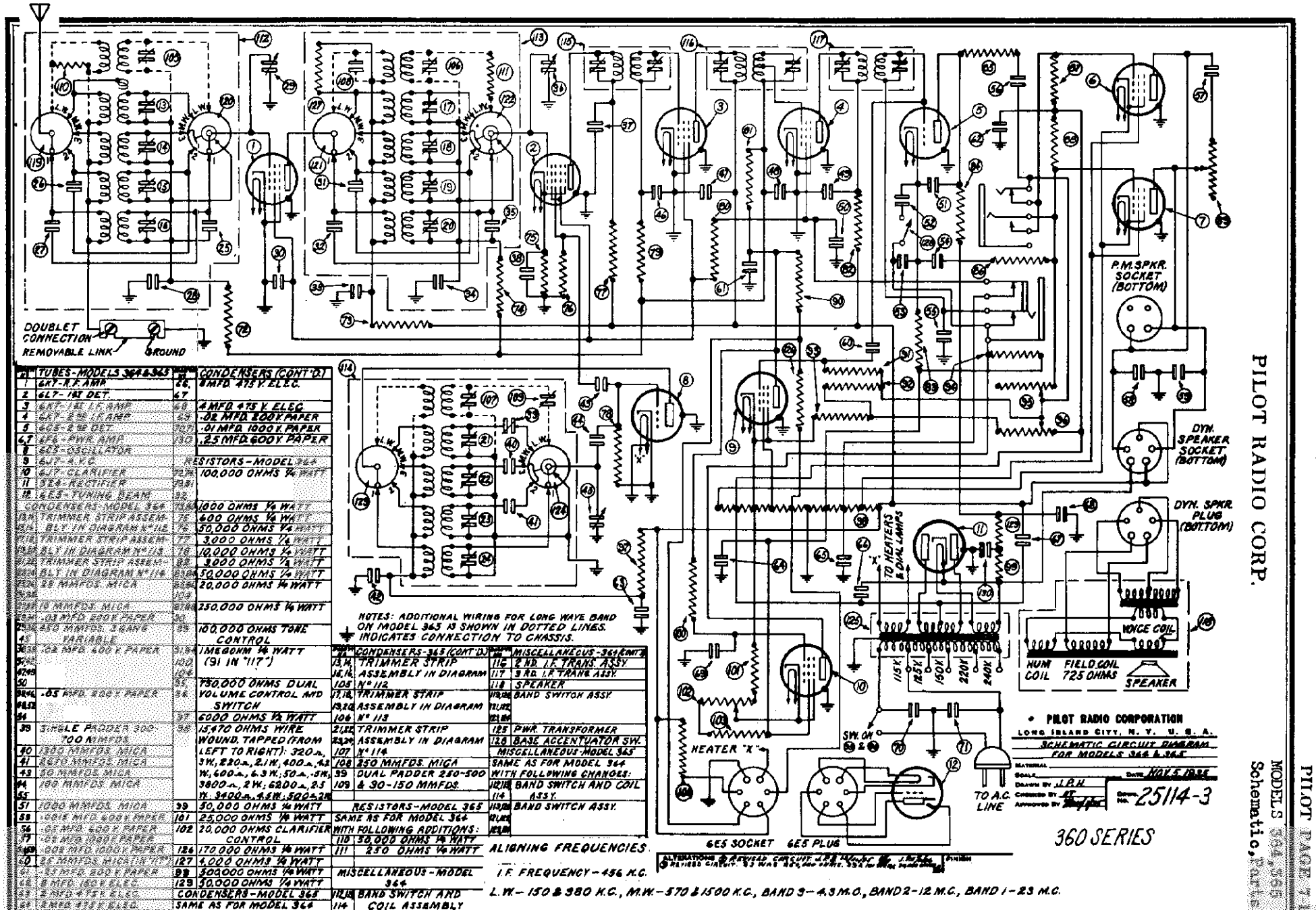

	TUBES - MODELS 364 & 365
1	6K7 - R.F. AMP.
2	6L7 - 1ST DET.
3	6K7 - 1ST I.F. AMP.
4	6K7 - 2ND I.F. AMP.
5	6C5 - 2ND DET.
6,7	6F6 - PWR. AMP.
8	6C5 - OSCILLATOR
9	6J7 - A.V.C.
10	6J7 - CLARIFIER
11	5Z4 - RECTIFIER
12	6E5 - TUNING BEAM

	CONDENSERS - MODEL 364
(SEE KEY)	TRIMMER STRIP ASSEM. - BLY IN DIAGRAM N° 112
(SEE KEY)	TRIMMER STRIP ASSEM. - BLY IN DIAGRAM N° 113
(SEE KEY)	TRIMMER STRIP ASSEM. - BLY IN DIAGRAM N° 114
(SEE KEY)	25 MMFDS. MICA
(SEE KEY)	15 MMFDS. MICA
(SEE KEY)	.03 MFD. 200 P. PAPER
(SEE KEY)	450 MMFDS. 3 GANG VARIABLE
(SEE KEY)	.02 MFD. 400 V. PAPER
(SEE KEY)	.05 MFD. 200 V. PAPER
(SEE KEY)	SINGLE PADDER 200-700 MMFDS.
(SEE KEY)	1300 MMFDS. MICA
(SEE KEY)	4470 MMFDS. MICA
(SEE KEY)	50 MMFDS. MICA
(SEE KEY)	100 MMFDS. MICA
(SEE KEY)	2000 MMFDS. MICA
(SEE KEY)	.0015 MFD. 600 V. PAPER
(SEE KEY)	.05 MFD. 400 V. PAPER
(SEE KEY)	.005 MFD. 1000 V. PAPER
(SEE KEY)	.005 MFD. 1000 V. PAPER
(SEE KEY)	.25 MMFDS. MICA (IN "117")
(SEE KEY)	.25 MFD. 200 V. PAPER
(SEE KEY)	8 MFD. 450 V. ELEC.
(SEE KEY)	2 MFD. 475 V. ELEC.
(SEE KEY)	2 MFD. 475 V. ELEC.

	CONDENSERS (CONT'D.)
26	8 MFD. 475 V. ELEC.
27	
28	4 MFD. 475 V. ELEC.
29	.05 MFD. 200 V. PAPER
30	.25 MFD. 600 V. PAPER
31	
32	
33	
34	
35	
36	
37	
38	
39	
40	
41	
42	
43	
44	
45	
46	
47	
48	
49	
50	
51	
52	
53	
54	
55	
56	
57	
58	
59	
60	
61	

	RESISTORS - MODEL 364
(SEE KEY)	100,000 OHMS 1/4 WATT
(SEE KEY)	1000 OHMS 1/4 WATT
(SEE KEY)	600 OHMS 1/4 WATT
(SEE KEY)	50,000 OHMS 1/4 WATT
(SEE KEY)	3,000 OHMS 1/4 WATT
(SEE KEY)	10,000 OHMS 1/4 WATT
(SEE KEY)	3000 OHMS 1/4 WATT
(SEE KEY)	50,000 OHMS 1/4 WATT
(SEE KEY)	20,000 OHMS 1/4 WATT
(SEE KEY)	250,000 OHMS 1/4 WATT
(SEE KEY)	100,000 OHMS TONE CONTROL
(SEE KEY)	1 MEGOHM 1/4 WATT (91 IN "117")
(SEE KEY)	750,000 OHMS DUAL VOLUME CONTROL AND SWITCH
(SEE KEY)	6000 OHMS 1/2 WATT
(SEE KEY)	15,470 OHMS WIRE WOUND, TAPPED (FROM LEFT TO RIGHT): 320Ω, 3W; 220Ω, 2.1W; 400Ω, 4.2W; 600Ω, 6.3W; 50Ω, .5W; 3800Ω, 2W; 6200Ω, 2.5W; 3400Ω, 4.5W; 500Ω, 2W
39	50,000 OHMS 1/4 WATT
101	25,000 OHMS 1/4 WATT
102	20,000 OHMS CLARIFIER CONTROL
126	170,000 OHMS 1/4 WATT
127	4,000 OHMS 1/4 WATT
99	300,000 OHMS 1/4 WATT
129	50,000 OHMS 1/4 WATT

	CONDENSERS - MODEL 365
112,113	BAND SWITCH AND COIL ASSEMBLY
114	SAME AS FOR MODEL 364

	CONDENSERS - 365 (CONT'D.)
13,14, 15,16	TRIMMER STRIP ASSEMBLY IN DIAGRAM
105	N° 112
17,18, 19,20	TRIMMER STRIP ASSEMBLY IN DIAGRAM
106	N° 113
21,22, 23,24	TRIMMER STRIP ASSEMBLY IN DIAGRAM
107	N° 114
108	250 MMFDS. MICA
109	& 30-150 MMFDS.

	RESISTORS - MODEL 365
39	50,000 OHMS 1/4 WATT
SAME AS FOR MODEL 364 WITH FOLLOWING ADDITIONS:	
110	30,000 OHMS 1/4 WATT
111	250 OHMS 1/4 WATT

	MISCELLANEOUS - MODEL 364
112	BAND SWITCH AND COIL ASSY.

	MISCELLANEOUS - 364 (CONT'D.)
116	2 ND. I.F. TRANS. ASSY.
117	3 RD. I.F. TRANS. ASSY.
118	SPEAKER
119,120, 121,122	BAND SWITCH ASSY.
125	PWR. TRANSFORMER
128	BASE ACCENTUATOR SW.

	MISCELLANEOUS - MODEL 365
SAME AS FOR MODEL 364 WITH FOLLOWING CHANGES:	
112,113	BAND SWITCH AND COIL ASSY.
114	BAND SWITCH ASSY.
119,120, 121,122	

NOTES: ADDITIONAL WIRING FOR LONG WAVE BAND ON MODEL 365 IS SHOWN IN DOTTED LINES.
+ INDICATES CONNECTION TO CHASSIS.

ALIGNING FREQUENCIES

I.F. FREQUENCY - 456 K.C.

L.W. - 150 & 380 K.C., M.W. - 570 & 1500 K.C., BAND 3 - 4.3 M.C., BAND 2 - 12 M.C., BAND 1 - 23 M.C.

© John F Rider Publisher

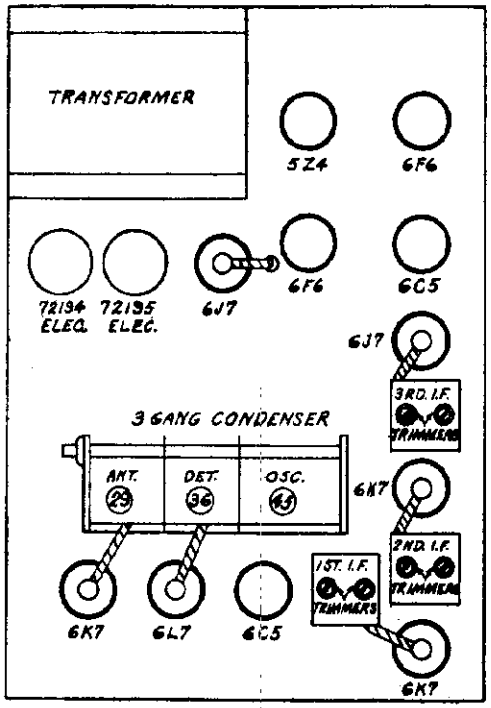

ALL-WAVE ANTENNA SYSTEM

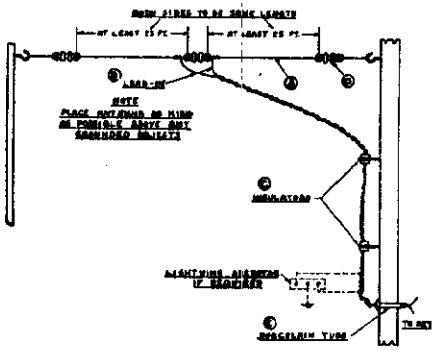

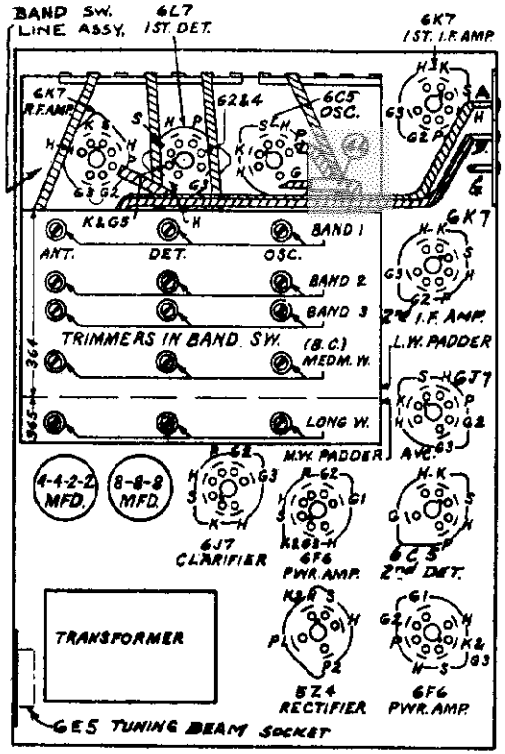

WIRING TO BAND SWITCH & ARRANGEMENT OF SOCKET TERMINALS.

SERVICE INFORMATION

REALIGNMENT: Should the receiver require alignment, the outlined procedure below should be followed. In the service information sheet, the location and function of the various alignment capacitors are clearly illustrated. For best results, an external modulated oscillator with adequate frequency range and a visual output meter, should be used.

Before connecting the chassis to the power line, reconnect the speaker cable in its socket at the rear of the chassis, and reinsert the tuning beam cable plug in the socket at the front of the chassis.

RECEIVER DESCRIPTION

Operating Voltages—115, 125, 150, 220, 240 Volts—Alternating Current 50-60 Cycles.
Power Consumption 125 Watts.
Wavelength range —From 13 to 565 meters (23,000 kc. to 530 kc.)
Undistorted power output—8 Watts.
I. F. —456 kc.
Type of Circuit —All wave Superheterodyne with TRF stage on all bands, A. V. C., Class "A" push pull power output stage.

I. F. ALIGNMENT: When aligning the Intermediate Frequency Amplifier, the external oscillator must be set at 456 kc. The Band Switch should be in the position marked "Broadcast", and the tuning condenser should be set at maximum capacity. When aligning the receiver on all positions, the volume control and the tone control should be turned to the maximum clockwise position. Connect the antenna lead of the external oscillator to the control grid of the 6K7 tube in the 2nd I. F. Amplifier through a .1 mfd. fixed condenser. Connect the ground lead of the external oscillator to the receiver ground lead. The I. F. alignment trimmers are located at the top of the shielded I. F. Transformers. Rotate the adjusting screw of each capacitor on I. F. Unit No. 3 slowly until maximum output is noted. On completion of this operation, remove the external oscillator lead from the 6K7 2nd I. F. amplifier tube and connect it in the same manner to the control grid of the 6K7 1st I. F. amplifier tube. Now rotate each adjustment screw on I. F. Unit No. 2 for maximum output. Following this, connect the external oscillator leads to the control grid of the 6L7 tube. Adjust each trimmer on the I. F. Unit No. 1 for maximum gain.

During these operations, use the least possible input to prevent broadening of the resonance peaks.

In order to obtain the most accurate realignment of the I. F. amplifier, it is essential to repeat the alignment process in all I. F. Units, with the external oscillator leads connected across the control grid of the 6L7 tube.

BROADCAST ALIGNMENT: After the I. F. amplifier is completely realigned, connect the external oscillator leads to the receiver antenna and ground leads through a .0002 mfd. condenser. Set the Band Switch in the "Broadcast" position and place the tuning control pointer at the 1500 kc. mark. Tune the external oscillator to 1500 kc. Adjust the broadcast band oscillator trimmer to maximum response.

Next adjust the interstage alignment trimmer for maximum response. Finally adjust the antenna section trimmer in the same manner.

Next adjust the 570 kc. padder condenser, located in the lower rear section of the band switch, under the chassis. Set the external oscillator at 570 kc. Rotate the receiver tuning control to the resonance position, and at the same time adjust the padder condenser for the highest peak.

Now repeat the 1500 kc. trimmer adjustment, following in every detail the procedure previously described.

The alignment frequencies are as follows:
Band 3—69.73 meters— 4,300 kc.
Band 2—26.07 meters—11,500 kc.
Band 1—13. meters—23,000 kc.

When aligning Band 3, set the Band Switch in the position marked Band 3. Rotate the tuning condenser to the 4300 kc. indication on the dial scale. Set the external oscillator at 4300 kc. Adjust the Band 3 oscillator trimmer for maximum sensitivity. Next adjust the interstage and antenna trimmer condensers for maximum sensitivity. Check the overall sensitivity of the band at several points along the dial scale.

Align Band 2 in a similar manner using a 400-ohm non-inductive resistor in place of the .0002 mfd. condenser. The alignment frequency is 11,500 kc. (26.07 meters).

The alignment of Band 1 requires greater care due to the higher frequencies covered by this band. The tracking characteristic of Band 1 of this receiver differs from that of the other bands, in that the 1st detector and T.R.F. circuits resonate on the high frequency side of the oscillator. This condition applies only to Band 1. The alignment frequency is 23000 kc. or 13 meters. Set the external oscillator at 13 meters. Rotate the tuning condenser of the receiver until the dial pointer is co-incidental with the 13 meter indication on the dial scale. Adjust the oscillator trimmer condenser for maximum sensitivity. Proceed next to align the interstage section. In doing this it is essential to rock the tuning control back and forth about the resonance position and at the same time to adjust the trimmer for the highest resonant peak. Next align the antenna section for maximum sensitivity.

THE LONG WAVE ALIGNMENT procedure in the Model 365 is similar to that of the broadcast. Turn the Band Switch to the Long Wave position. The alignment frequency is 220 kc. Adjust the padder condenser at 150 kc. Use a .0002 mfd. condenser in the antenna lead from the external oscillator.

VOLTAGES

Volume Control—Turn to right during measurements. Speaker field—104 Volts.
Tuning Beam—Target 200 Volts to ground.

The D. C. Voltages measured at the tube sockets of the set should be read with a high resistance voltmeter of at least 1,000 ohms per volt.

	R.F. 6K7	Osc. 6C5	1st Det. 6L7	1st I.F. 6K7	2nd I.F. 6K7	2nd Det. 6C5	6F6 Pwr. Pent.	Pwr. Pent. 6F6	A.V.C. 6J7	Clar. 6J7	Rect. 5Z4	T.B. 6E5
Plate	185	130	187	190	170	235	190	190	—1	20	.....	10
Screen	100	.....	100	100	108	.....	182	182	—38	40	.....	.....
Cathode	.....	.....	3.3	.....		52	—58	—58	—64	9	300	—3
Filament	6.5	6.5	6.5	6.5	[redacted] 6.5	6.5	6.5	6.5	6.5	6.5	[redacted] 5.	6.5

MODELS 364 and 365 PILOT ALL-WAVE SUPERHETERODYNES

Model 365 is sold in European area only

RCA MFG. CO., INC.

MODEL 4T
Schematic, Socket
Chassis Wiring, Trimmers
Loud Speaker, Transformer

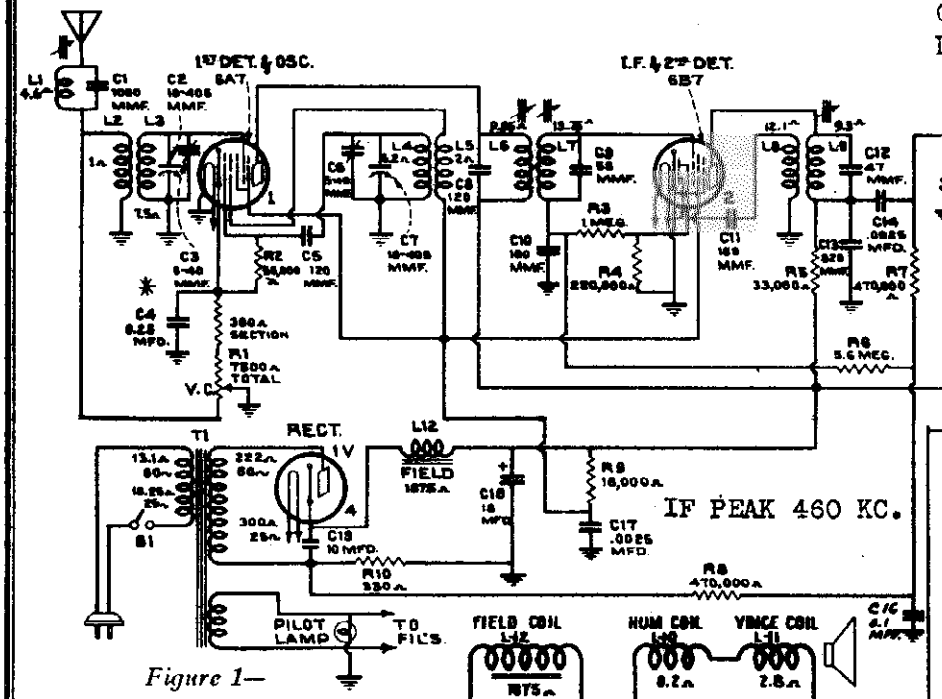

Figure 1—

Schematic Circuit Diagram

* On some instruments C-4 is .05 mfd.

Make all replacements with Stock No. 4840.

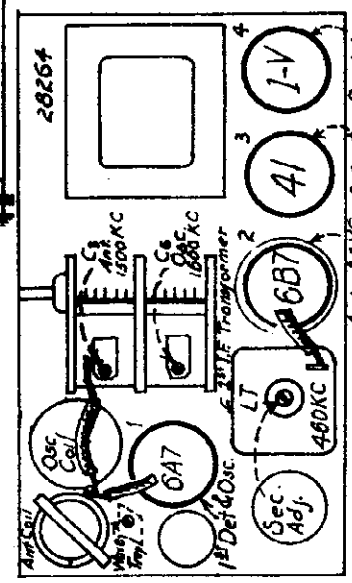

Figure 3—Radiotron, Coil, and Trimmer Locations

Figure 6—

Loudspeaker Wiring

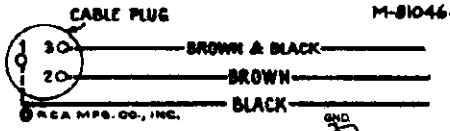

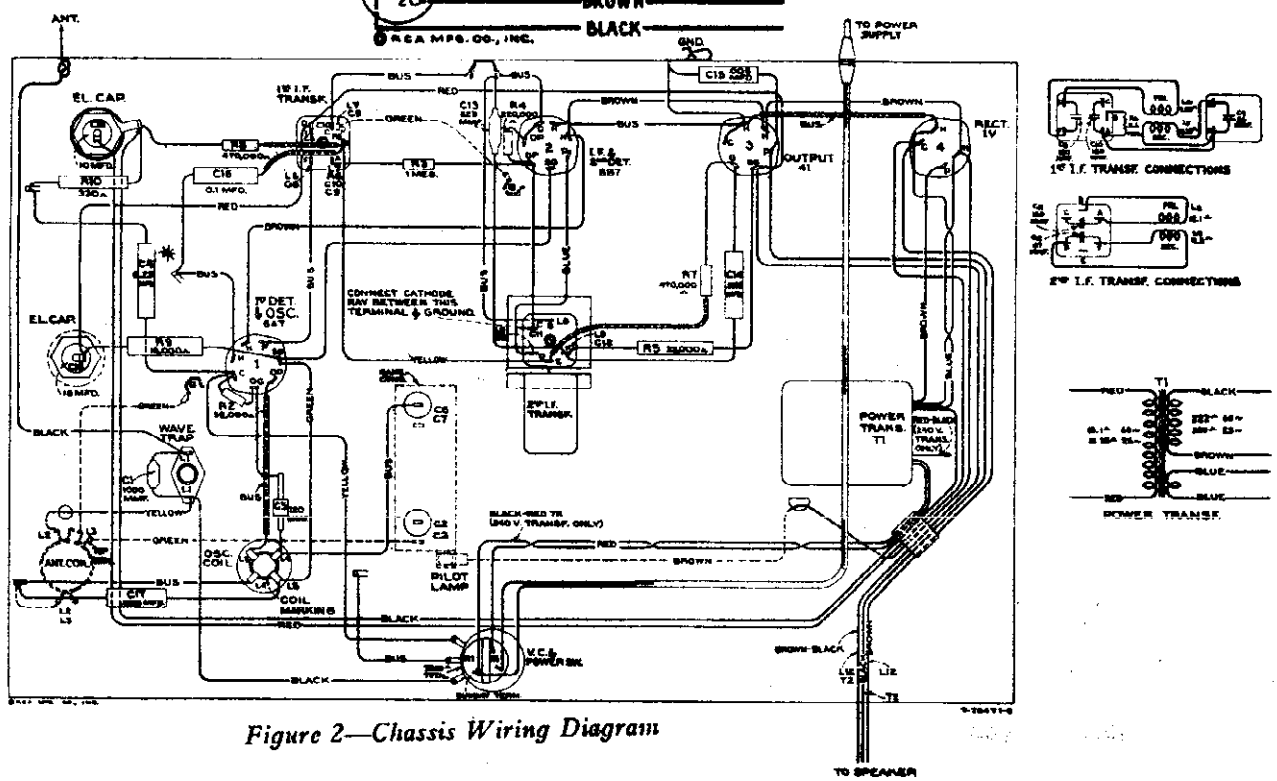

Figure 2—Chassis Wiring Diagram

©John F. Rider, Publisher

MODEL 4T
Voltage, Resistance
Transformer

RCA MFG. CO., INC.

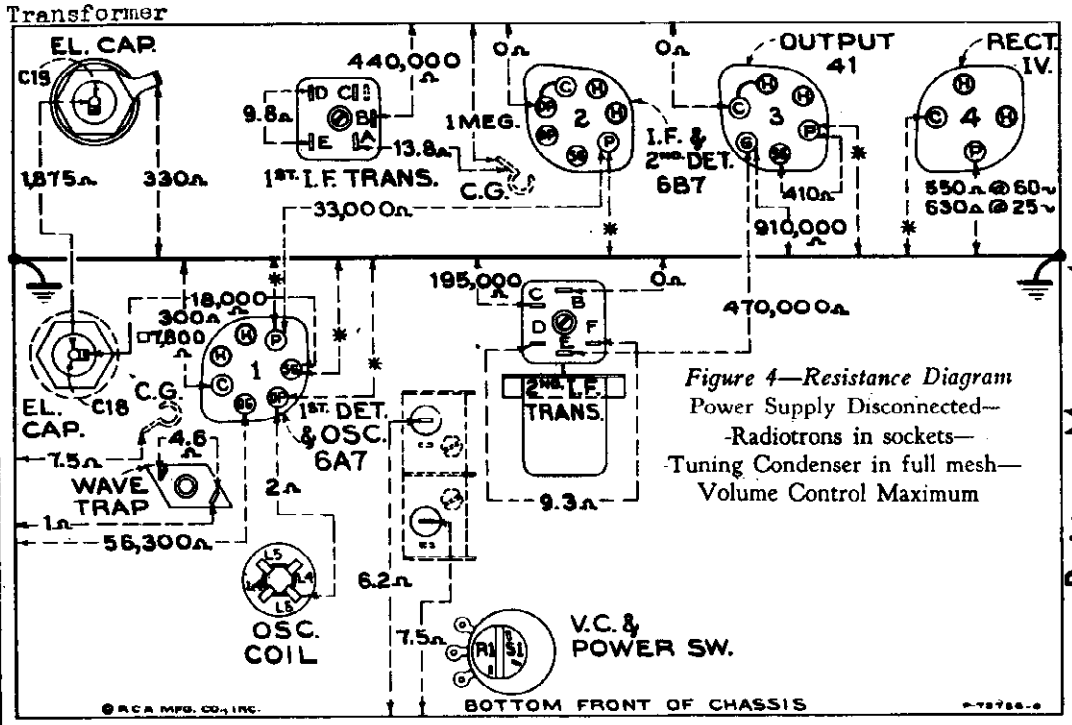

Figure 4—Resistance Diagram
Power Supply Disconnected—
-Radiotrons in sockets—
-Tuning Condenser in full mesh—
Volume Control Maximum

Resistance Measurement

The resistance values shown between Radiotron socket contacts, grid caps, resistors, terminals, and receiver chassis ground, on Figure 4, have been carefully selected so as to facilitate a rapid continuity check of the circuits. The use of this diagram in conjunction with the Schematic Circuit Diagram, Figure 1, and Chassis Wiring Diagram, Figure 2, will permit the location of certain troubles which might otherwise be difficult to ascertain. Each value as specified should hold within ±20%. Variations in excess of this limit will usually be indicative of trouble in circuit under test. Resistance values were measured with the Radiotrons in sockets; tuning condenser in full mesh, and volume control set at maximum except where otherwise noted. In all cases of measuring the resistance between points of the circuit and ground, it will be necessary to connect the negative terminal of the resistance meter to chassis-ground. If the polarity of the resistance meter is not known, it may be readily ascertained by connecting a d-c voltmeter of indicated polarity across the terminals of the device.

NOTE: □ VOLUME CONTROL AT "MIN." POSITION.
* OPEN CIRCUIT (LEAKAGE OF ELECTROLYTIC CAPACITORS ONLY).

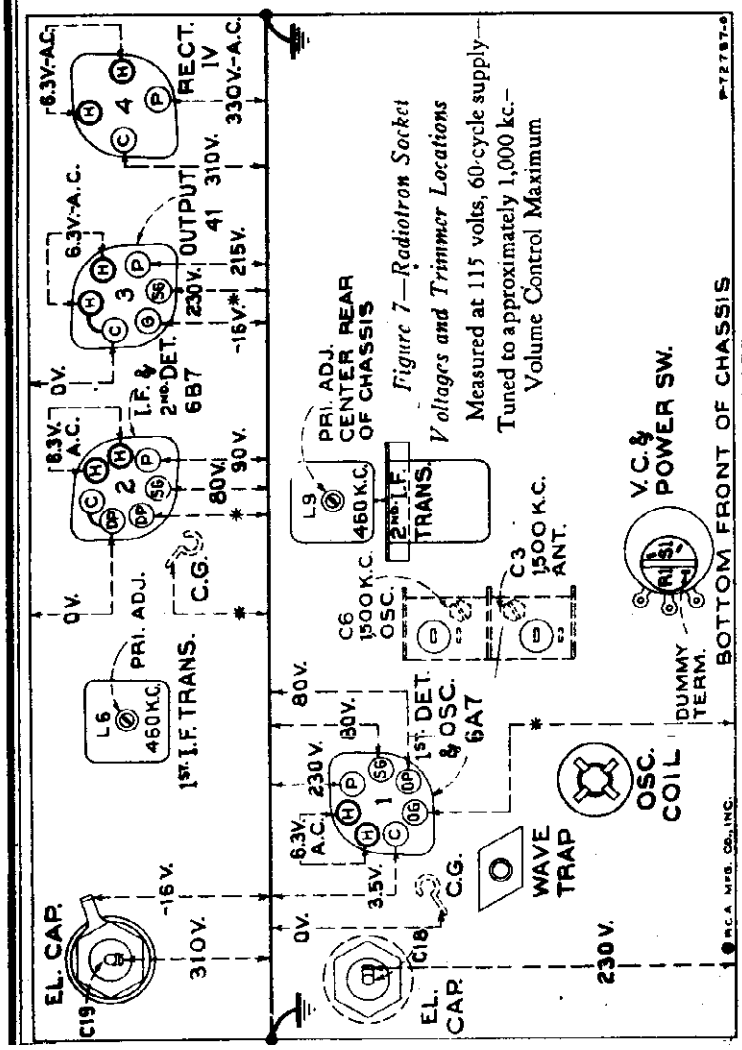

Figure 7—Radiotron Socket Voltages and Trimmer Locations
Measured at 115 volts, 60-cycle supply—
Tuned to approximately 1,000 kc.—
Volume Control Maximum

* CANNOT BE MEASURED WITH ORDINARY VOLTMETER.

Radiotron Socket Voltages

The voltage values indicated from the Radiotron socket proximately 1,000 kc., no signal being received and volcontacts, grid caps, resistors, and terminals to receiver ume control set at maximum. To duplicate the conditions chassis ground on Figure 7 will assist in locating cause under which the voltages were measured requires a 1,000for faulty operation. Each value as specified should hold ohm-per-volt d-c meter, having ranges of 10, 50, 250, within ±20% when the receiver is normally operative and 500 volts. Use the nearest range above the voltage at its rated line voltage. Variations in excess of this limit will usually be indicative of trouble in the basic circuits. These voltages were measured with receiver tuned to approximately a-c meter. A-C voltages were measured with a cor-

Primary Resistance - 23.6 ohms Total
Secondary Resistance - 180 ohms Total

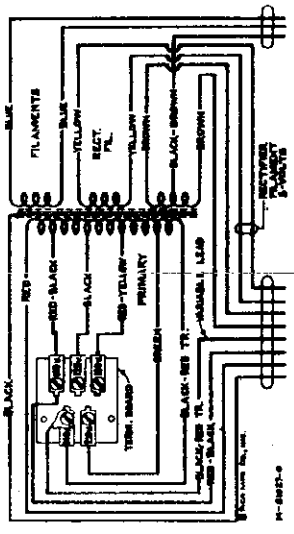

Figure 5—Universal Transformer

RCA MFG. CO., INC.

MODEL 4T
Circuit Data, Alignment
Parts List

GENERAL FEATURES

This model contains a four-tube chassis mounted in a table-type cabinet. The superheterodyne circuit is used, incorporating such features of design as automatic volume control, magnetite core adjusted i-f transformers, diode detection, reflexed audio system, electrodynamic speaker, and improved antenna wavetrap. The frequency range extends from 540 to 1,720 kc. which covers the regular broadcast band and includes police calls in the 1,500 to 1,720 kc. portion of the range.

CIRCUIT DESCRIPTION

Four Radiotrons are associated in combination with a superheterodyne circuit. Two of the Radiotrons are applied so as to obtain plural functions. The first tube, an RCA-6A7 pentagrid converter tube, is employed as a combination first detector and oscillator. The second tube, an RCA-6B7, performs the functions of i-f amplification, diode detection, audio amplification, and automatic volume control. A power-amplifier pentode, RCA-41, is used in the output stage.

Half-wave rectification is used in the power supply stage. The speaker field winding serves as a reactor in the filter circuit.

The radio-frequency and intermediate-frequency stages are intercoupled by means of transformers. The antenna transformer couples directly into the first detector, having its secondary tuned by one section (front) of the two-gang tuning condenser. The oscillator system is tuned by the second (rear) section of the condenser. Adjustable magnetite-core trimmers are provided for adjusting the inductance of the windings of the input i-f transformer (primary and secondary) and the output transformer (primary) so as to resonate at 460 kc. with the fixed capacitors shunting these respective coils. The i-f signal originating in the first-detector circuit is transferred to the control grid of the RCA-6B7, amplified in the pentode section, coupled back to the diode section of this same tube where it is rectified before passing through resistor R-4. A fraction of the audio component developed across resistor R-4 appears across resistor R-6 from whence it is transferred to the control grid of the Radiotron 6B7 through winding L-7; L-7 and capacitor C-10 offering low and high reactance respectively to audio frequencies. The amplified audio signal, in the plate circuit of the RCA-6B7, developed across resistor R-5 is coupled to the control grid of the power-output tube for final amplification. The output of this stage is coupled to the loudspeaker through the output transformer T-4. The d-c signal component, of the diode rectified current, developed across R-4, increases the bias of the RCA-6B7, thereby reducing its gain and giving A.V.C. action.

SERVICE DATA

NOTE: Oscillation may occur in receiver if external ground connection is not used.

The various diagrams of this booklet contain such information as will be needed to locate causes for defective operation if such develops. The values of resistors, capacitors, coils, etc., are indicated adjacent to the symbols signifying these parts on the diagrams.

Identification titles, such as R-3, L-2, C-1, etc., are provided for reference between the illustrations and the Replacement Parts List. The coils, resistors, and transformer windings are rated in terms of their d-c resistance only. Ratings of less than one ohm are generally omitted.

ALIGNMENT PROCEDURE

There are two alignment trimmers provided in the antenna coil and oscillator coil tuned circuits. The i-f transformer adjustments are made by means of three screws attached to molded magnetite cores.

All of the adjustable circuits of this receiver have been properly aligned at the factory to give correct performance and their settings should remain intact indefinitely when the receiver is used under ordinary conditions. However, necessity for re-adjustment may occasionally occur from continued extremes of temperature, climate, tampering or purported alteration for services, or after repairs have been made to the r-f or i-f tuned circuits. Improper alignment usually causes the impairment of sensitivity, selectivity, and tone quality. Such conditions will usually exist simultaneously.

In re-adjusting the tuned circuits, it is important to apply a definite procedure, and to use adequate and reliable test equipment. A standard test oscillator such as the RCA Stock No. 9595 will be required as the source of the signal at the specified alignment frequencies. Visual indication of the receiver output during alignment is also necessary to accurately show when the correct point of adjustment is reached. The RCA Stock No. 4517 Neon Output Indicator is especially suitable for this use.

The following procedure should be observed in adjusting the various trimming capacitors and molded magnetite cores:

I-F Core Adjustments

The three adjustment screws (one on top and one on bottom of first i-f transformer and one on bottom of second i-f transformer) are located as shown by Figures 6 and 7. Each circuit must be aligned to a basic frequency of 460 kc. To do this, attach the output indicator across the loudspeaker voice coil or across the output transformer primary. Connect the output of the test oscillator to the RCA-6A7 control grid, the ground of the test oscillator being connected to the receiver ground terminal. Adjust the test oscillator to 460 kc. Advance the receiver tuning control to a point within its range where no interference is encountered either from local broadcast stations or local oscillator. Set the volume control to its maximum position. Increase the output of the test oscillator until a slight indication is apparent on the output indicator. Adjust the bottom screw of the second i-f transformer to produce maximum (peak) indicated receiver output. Then adjust the two screws of the first i-f transformer for maximum (peak) receiver output as shown by the indicating device.

During these adjustments, regulate the test oscillator output so the indication is always as low as possible. By doing so, broadness of tuning, due to A.V.C. action, will be avoided. It is advisable to repeat the adjustment of all i-f screws to assure that the interaction between them has not disturbed the original adjustment.

Wave-Trap Adjustment

Attach the output of the test oscillator to the black antenna lead through a 500-ohm resistor, the ground connection of the test oscillator remaining the same. Leave the test oscillator adjusted to 460 kc. as before. Turn the rotor plates of the two-gang tuning condenser completely out of mesh. Then adjust the wave-trap trimmer to the point which causes maximum suppression of the 460 kc. signal.

R-F Trimmer Adjustments

Calibrate the tuning dial by first loosening its set screw and then rotating dial until the extreme end calibration mark (beyond 55 on dial) is in alignment with the dial shadow-indicator while the two-gang tuning condenser plates are in full mesh. Re-tighten set screw.

The output meter should be left connected to the output system. The connections for the test oscillator remain the same as for "Wave-trap adjustment."

Adjust the test oscillator to 1,500 kc. and set the receiver tuning control to a dial reading of 1,500 kc. Leave the volume control at its maximum position. Regulate the output of the test oscillator until a slight indication is perceptible at the receiver output. Then adjust the two trimming capacitors C-6 and C-5 of the oscillator and antenna coils, Figure 3, so that each produces maximum (peak) receiver output.

REPLACEMENT PARTS

STOCK NO.	DESCRIPTION	LIST PRICE
	Receiver Assemblies	
6956	Cap--Radiotron shield top for Stock No. 3942.....	.15
12118	Cap--Grid contact cap--Package of 5.....	.15
12405	Capacitor--47 Mmfd.(C12)..	.26
12629	Capacitor--56 Mmfd.(C9)..	.20
12404	Capacitor--120 Mmfd.(C8)..	.26
12654	Capacitor--120 Mmfd.(C5)..	.20
12406	Capacitor--180 Mmfd.(C10, C11).....	.26
12536	Capacitor--820 Mmfd.(C15)..	.25
12655	Capacitor--1000 Mmfd.(C1) .	.25
5107	Capacitor--.0025 Mfd. (C14, C17).....	.15
4836	Capacitor--.005 Mfd. (C16).	.20
4841	Capacitor--0.1 Mfd.(C18) .	.22
4840	Capacitor--0.25 Mfd. (C4) .	.50
11240	Capacitor--10 Mfd.(C19)..1.	.08
5212	Capacitor--18 Mfd. (C18).1.	.10
11661	Coil--Antenna coil (L2, L5).....	.52
11662	Coil-Oscillator coil (L4, L6).....	.56
12624	Condenser--2 gang variable tun. condenser (C2,C5,C6,C7)2.	.50
12006	Core-Core and stud assembly for Stock Nos. 12627,12650 and 12651.....	.22
12632	Dial--Indicator dial scale.	.45
12626	Indicator--Tuning indicator for for Stock No. 12625-Package of 10.....	.22
4540	Lamp--Dial Lamp--Package of 5.....	.50
11670	Resistor--350 ohms, carbon type, 1 watt (R10)--Package of 5.....1.	.10
11671	Resistor--18,000 ohms, carbon type, 2 watt (R9)....	.22
11569	Resistor--33,000 ohms carbon type, 1 watt (R6) Package of 5.....1.	.10
12286	Resistor--56,000 ohms. Insulated, 1/4 watt (R2) Package of 5.....1.	.00
12264	Resistor--220,000 ohms, Insulated, 1/4 watt (R4) Package of 5.....1.	.00
12285	Resistor--470,000 ohms, Insulated, 1/4 watt (R7, R8)-Package of 5.....	1.00
12200	Resistor--1 megohm, Insulated, 1/4 watt (R3)-Package of 5.....	1.00
12628	Resistor--5.6 megohm,carbon type, 1/10 watt (R5) Package of 5.....	.75
12635	Screw--set screw for dial Stock No. 12552--Package of 10.....	.18
12008	Shield--First I.F. transformer shield.....	.28
12607	Shield--First I.F. transformer shield cap.....	.30
11126	Shield--Oscillator coil shield.....	.12
3942	Shield--Radiotron shield.	.18
12408	Shield--Second I.F. transformer shield.....	.28
4794	Socket--4-contact rectifier RCA-1V Radiotron socket.....	.15
4786	Socket--6-contact RCA-41 Radiotron socket.....	.15
4787	Socket--7-contact RCA-6A7 or RCA-6B7 Radiotron socket.....	.15
12625	Socket--Dial lamp socket, bracket and indicator...	.28
12007	Spring--Retaining spring for Stock No. 12006--Package of 10.....	.56
12627	Transformer--First I.F. transformer (L6,L7,C8,C9, C10, R6).....	1.84
11664	Transformer--Power transformer, 105-125 volts 50-60 cycles (T1).....	5.60
11665	Transformer--Power transformer, 105-125 volts, 25-60 cycles (T1).....	5.06
11666	Transformer--Power transformer, 100-150, 140-160 195-250 volts, 40-60 cycles.....	5.80
12650	Transformer--Second I.F. transformer (L8,L9,C11, C12).....	1.44
12651	Trap--Wave trap (L1).....	.65
11663	Volume Control--Volume control and operating switch (R1, S1).....	1.20
	REPRODUCER ASSEMBLIES	
12446	Coil--Neutralizing coil (L10).....	.22
12576	Coil--Reproducer field coil (L12).....	1.70
12574	Cone--Reproducer cone complete (L11).....	1.55
5118	Connector--3-contact male connector plug for reproducer.....	.25
5119	Connector--3-contact female connector plug for Reproducer.....	.25
9698	Reproducer, complete.....5.	.70
12575	Transformer--Output transformer (T2).....	1.60
	MISCELLANEOUS ASSEMBLIES	
11547	Knob--Station selector knob Package of 5.....	.75
12638	Knob--Volume control knob Package of 5.....	.58
11549	Spring--Retaining spring for knob, Stock Nos. 11547 and 12638--Package of 5.....	.15

The prices quoted above are subject to change without notice

©John F. Rider, Publisher

MODELS T4-8A, T4-9A
Voltage, Socket, Data
Parts List

RCA MFG. CO., INC.

These instruments are similar to Models T 4-8 and T 4-9 except for several circuit modifications. The major differences include:—rearrangement of wave-trap circuit, removal of oscillator low frequency trimmer, replacement of the RCA-6F7 with an RCA-6B7, and reflexing of the i-f stage for additional audio amplification. The intermediate frequency remains at 460 kc. The antenna and oscillator coils are to be aligned only at 1400 kc. Refer to T 4-8 and T 4-9 Service Notes for loudspeaker data, power ratings and specifications.

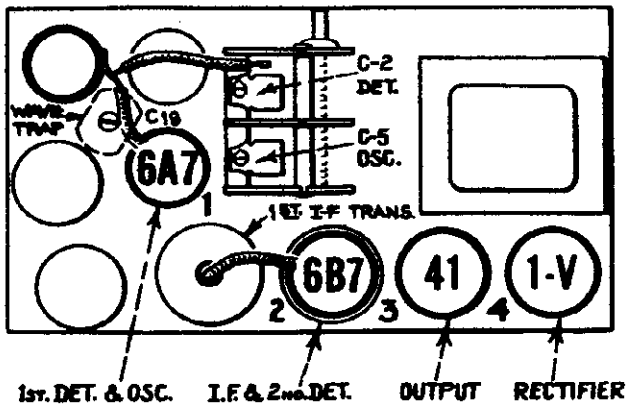

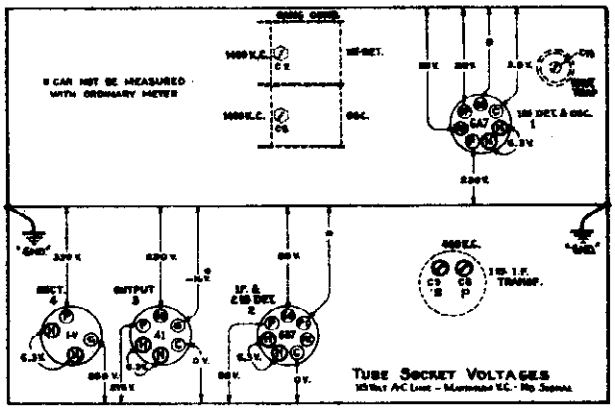

REPLACEMENT PARTS

Insist on genuine factory tested parts, which are readily identified and may be purchased from authorized dealers

Stock No.	Description	List Price
	Receiver Assemblies	
4244	Cap—Grid contact cap—Package of 5	$ 0.20
6956	Cap—Second detector Radiotron shield cap	.15
4246	Capacitor—80 mmfd. (C3)	.24
5116	Capacitor—175 mmfd. (C10)	.18
11500	Capacitor—175 mmfd. (C11)	.18
3784	Capacitor—900 mmfd. (C12)	.30
5107	Capacitor—.0025 mfd. (C13, C17)	.16
4868	Capacitor—.005 mfd. (C14)	.20
4836	Capacitor—.05 mfd. (C4)	.30
4841	Capacitor—0.1 mfd. (C18)	.22
11497	Capacitor—8 mfd. (C16)	1.04
11240	Capacitor—10 mfd. (C15)	1.08
11661	Coil—Antenna coil (L1, L2)	.52
11662	Coil—Oscillator coil (L3, L4)	.56
11660	Condenser—Two gang variable tuning condenser (C1, C2, C5, C6)	2.50
11659	Dial—Station selector dial	.35
11670	Resistor—330 ohms—carbon type—1 watt (R8)—Package of 5	1.10
11671	Resistor—18,000 ohms—carbon type—2 watts (R9)	.22
11669	Resistor—33,000 ohms—carbon type—1 watt (R5)—Package of 5	1.10
5029	Resistor—56,000 ohms—carbon type—1/4 watt (R1)—Package of 5	1.00
5158	Resistor—220,000 ohms—carbon type—1/4 watt (R4)—Package of 5	1.00
11172	Resistor—470,000 ohms—carbon type—1/4 watt (R6, R10)—Package of 5	1.00
3033	Resistor—1 Megohm—carbon type—1/4 watt (R3)—Package of 5	1.00
11668	Resistor—5.6 Megohms—carbon type—1/4 watt (R7)—Package of 5	1.00
11126	Shield—Oscillator coil shield	.12
3942	Shield—Second detector Radiotron shield	.18
11390	Shield—First intermediate frequency transformer shield	.25
4340	Lamp—Dial lamp—Package of 5	.60
5152	Transformer—First intermediate frequency transformer (L5, L6, C8, C9)	1.68
7955	Transformer—Second intermediate frequency transformer (L7, L8)	.85
11665	Transformer—Power transformer—105-125 volts 25-50 cycles	5.06
11666	Transformer—Power transformer—100-130/140-160/195-250 volts 40-60 cycles	3.80
11664	Transformer—Power transformer—105-125 volts 50-60 cycles—(T1)	3.60
11667	Trap—Wave trap (L11, C19)	1.22
11663	Volume control (R2, S1)	1.20
	Reproducer Assemblies	
11672	Coil—Field coil, magnet and cone support assembly (L10)	3.45
9588	Cone—Reproducer cone (L9)—Package of 5	3.55
5119	Connector—Three-contact female connector for reproducer cable	.25
5118	Connector—Three-contact male connector for reproducer	.25
9630	Reproducer—Complete	5.50
4893	Transformer—Output transformer (T2)	1.48

RCA MFG. CO., INC.

MODELS T4-8A, T4-9A
Schematic
Chassis Wiring

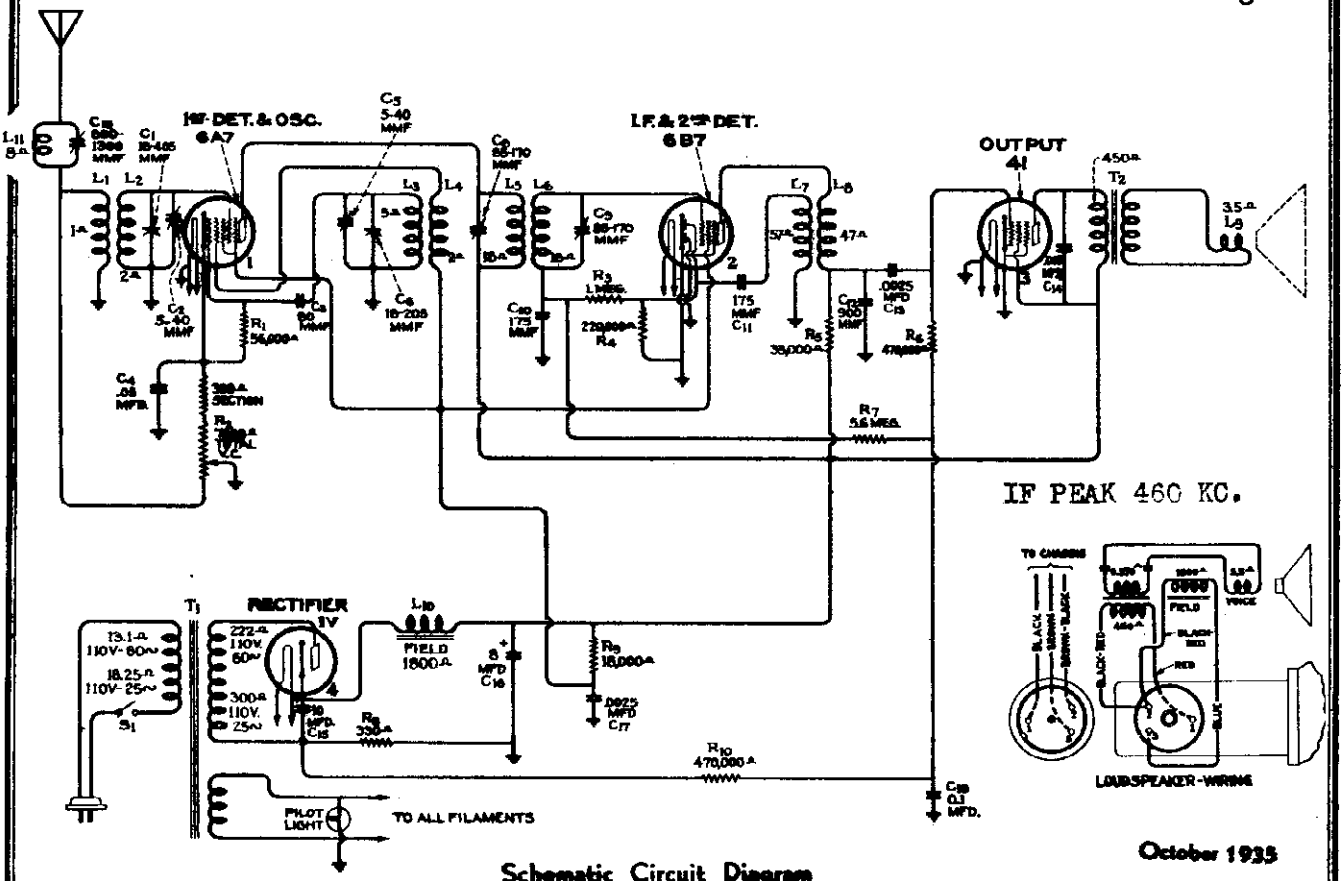

October 1935

Schematic Circuit Diagram

C-4 is .01 Mfd. in Some Instruments.

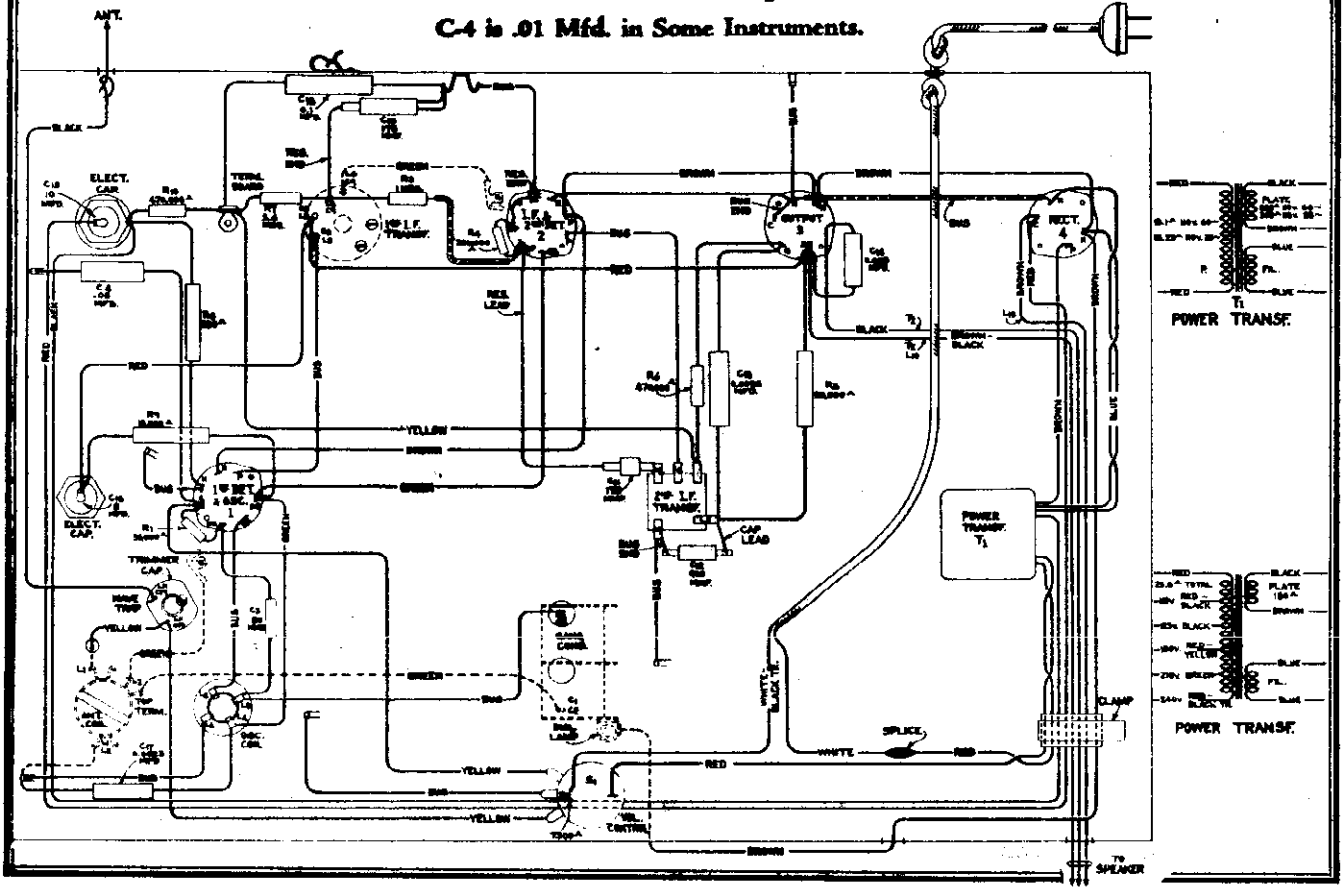

General Features

Each model contains a four-tube chassis mounted in a table-type cabinet. The superheterodyne type of circuit is used, with such features of design as magnetite core adjusted i-f transformers, improved core adjusted antenna wave-trap, illumination of full-vision dial scale, resistance-coupled audio system, and an electrodynamic loudspeaker. The tuning range covers from 540 to 1,720 kc which includes the standard-broadcast and one police band.

Circuit Arrangement

The conventional superheterodyne type of circuit, consisting of a combined first-detector–oscillator stage, a combined i-f amplifier and second detector stage, an audio power-output stage, and a half-wave rectifier stage, is used.

Tuned Circuits

The antenna and oscillator coils are tuned by a variable two-section gang condenser having trimming capacitors in shunt with each section. A wave-trap is employed and is connected in series with the antenna to reduce undesirable signals in the range of the i-f amplifier. It is tuned to 460 kc by means of a screw attached to the molded magnetite core.

The intermediate-frequency amplifier system consists of the pentode section of the RCA-6F7 in a transformer-coupled circuit. This stage operates at a basic frequency of 460 kc. Adjustable mangetite cores are provided for adjusting the inductance of the first i-f transformer primary and secondary, and the second i-f transformer secondary windings to 460 kc.

Second Detector and Audio System

The second-detector circuit uses the triode-portion of the RCA-6F7 in a conventional three-element power-detector circuit. The output of this stage is resistance-capacitance coupled to an RCA-43 power-output tube which, in turn, is transformer-coupled to the dynamic speaker.

Rectifier

The plate, grid, cathode, and the loudspeaker field voltages required for the operation of this receiver are supplied by the RCA-25Z5 tube operating as a half-wave rectifier.

SERVICE DATA

Alignment Procedure

There are two alignment trimmers provided in the antenna-coil and oscillator-coil tuned circuits. The i-f transformer adjustments are made by means of three screws attached to molded magnetite cores. The wave-trap is likewise adjusted by a screw attached to its molded core. Re adjustment may occasionally occur from continued extremes of climate, tampering, purported alteration for services, or after repairs have been made to the r-f or i-f tuned circuits. Improper alignment usually causes the impairment of sensitivity, selectivity, and tone quality. Such conditions will usually exist simultaneously.

In re-adjusting the tuned circuits, it is important to apply a definite procedure and to use adequate and reliable test equipment. A standard test oscillator, such as the RCA Stock No. 9595, will be required as the source of the signal at the specified alignment frequencies. Visual indication of the receiver output during alignment is also necessary to accurately show when the correct point of adjustment is reached. The RCA Stock No. 4317 Neon Output Indicator is especially suitable for this use.

The procedure outlined below should be followed in adjusting the various trimming capacitors and molded magnetite cores:

I-F Core Adjustments

The three adjustment screws (one on top and one on bottom of first i-f transformer and one on bottom of second i-f transformer) are located as shown by figures 2 and 4. Each circuit must be aligned to a basic frequency of 460 kc. To do this, attach the output indicator across the loudspeaker voice coil. Connect the output of the test oscillator through a .05-mfd. capacitor to the RCA-6A7 control grid, the ground of the test oscillator being connected to the receiver chassis. Set the test oscillator to 460 kc. Advance the receiver volume control to its full-on position and adjust the receiver tuning control to a point within its range where no interference is encountered either from broadcast stations or the heterodyne oscillator. Increase the output of the test oscillator until a slight indication is apparent on the output indicator.

Adjust the bottom core screw of the second i-f transformer to produce maximum (peak) indicated receiver output. Then adjust the two core screws of the first i-f transformer for maximum (peak) receiver output as shown by the indicating device.

It is advisable to repeat the adjustment of all i-f core screws to assure that the inter-action between them has not disturbed the original adjustment.

Wave-Trap Adjustment

Attach the output of the test oscillator to the "Antenna terminal" (see wave-trap, top view chassis, figure 2) through an 80-mmfd. capacitor, the ground connection of the test oscillator and receiver chassis being connected as before. Receiver "Antenna wire" should be reeled up for this and the following r-f adjustments.

Leave the test oscillator adjusted to 460 kc as before. Then adjust the wave-trap trimmer to the point which causes maximum suppression of the 460 kc signal.

R-F Trimmer Adjustments

Since the dial is mounted on the cabinet, it will be necessary to perform the operations, in sequence, as follows:

Place the receiver in its cabinet. Set the gang tuning condenser to its maximum capacity (full-mesh) position and place the tuning knob on the gang tuning condenser shaft. Tighten the knob set screw with the dial pointer set to the low-frequency calibration line beyond 550 kc (beyond "55" on the dial). Turn the tuning knob until the dial pointer indicates 1,500 kc. Remove the tuning knob from shaft and receiver from cabinet, being careful not to disturb the setting of the gang condenser.

With the test oscillator and output indicator connected as specified under "Wave-trap adjustment" and receiver volume control in its maximum position, tune the test oscillator to 1,500 kc and regulate its output to produce a suitable indication on the output indicator. Adjust the oscillator and antenna trimmers C8 and C4 for maximum (peak) output.

Loudspeaker

Centering of the loudspeaker voice coil is made in the usual manner with three narrow paper feelers after first removing the front paper dust cover. This may be removed either permanently by cutting it away with a sharp knife, or by softening its cement with a very light application of acetone using care not to allow the acetone to flow down into the air gap. The dust cover may be cemented back in place with ambroid upon completion of adjustment.

Radiotron Socket Voltages

The voltage values indicated from the Radiotron socket contacts, grid caps, resistors, and terminals to receiver chassis ground, on figure 4, will assist in locating cause for faulty operation. Each value as specified should hold within ±20% when the receiver is normally operative at its rated line voltage. Variations in excess of this limit will usually be indicative of trouble in the basic circuits. These voltages were measured with set tuned to approximately 550 kc, no signal being received, and volume control set to maximum. To duplicate the conditions under which the voltages were measured requires a 1,000-ohms-per-volt d-c meter, having ranges of 10, 50, and 250 volts. Use nearest range above voltage to be measured. A-c voltages were measured with a corresponding a-c meter.

Resistance Measurements

The resistance values shown between Radiotron socket contacts, grid caps, resistors, terminals, and receiver chassis ground, on figure 3, have been carefully selected so as to facilitate a rapid check of the circuit for defective parts, bad joints, etc. The use of this diagram in conjunction with the Schematic Circuit Diagram, figure 1, and the Chassis Wiring Diagram, figure 2, will permit the location of certain troubles which would otherwise be difficult to ascertain. Each value as specified should hold within ±20%. Variations in excess of this limit will usually be indicative of trouble in the basic circuits. Resistance values were measured with the Radiotrons in sockets, power supply disconnected, tuning condenser in full-mesh, and volume control set at maximum except where otherwise noted. In all cases of measuring the resistance between points of the circuit and ground, it will be necessary to connect the negative (—) terminal of the resistance meter to the chassis ground. If the polarity of the resistance meter is not known, it may be readily ascertained by connecting a d-c voltmeter of indicated polarity across the terminals of the device.

REPLACEMENT PARTS

Stock No.	Description	List Price
	RECEIVER ASSEMBLIES	
12118	Cap—Grid contact cap—Package of 5	.15
12405	Capacitor—47 Mmfd. (C16)	.26
12629	Capacitor—56 Mmfd. (C13)	.20
12404	Capacitor—120 Mmfd. (C12)	.26
12724	Capacitor—120 Mmfd. (C9)	.28
12537	Capacitor—560 Mmfd. (C1, C5)	.20
12536	Capacitor—820 Mmfd. (C15)	.25
5107	Capacitor—.0025 Mfd. (C2)	.16
4858	Capacitor—.01 Mfd. (C17, C18)	.25
4836	Capacitor—.05 Mfd. (C10, C11, C14, C22, C24)	.30
4886	Capacitor—.05 Mfd. (C19)	.20
4840	Capacitor—0.25 Mfd. (C23)	.30
12484	Capacitor—0.25 Mfd. (C6)	.24
12844	Capacitor—Pack comprising 2 sections each 16 Mfd. (C20, C21)	2.55
12837	Coil—Antenna coil (L2, L3)	1.50
12838	Coil—Oscillator coil (L4, L5)	.85
12842	Condenser—2-gang variable tuning condenser (C1, C4, C7, C8)	2.30
12847	Cord—Power cord, 153 ohm resistance (R14)	.95
12006	Core—Adjustable core and stud for Stock No. 12487, 12839 and 12840	.22
4349	Lamp—Dial lamp, 6.3 volt—Package of 5	.60
12409	Lead—Antenna lead approximately 20 feet long	.35
12843	Reactor—Iron core reactor (L11)	1.00
12848	Resistor—47 ohm—insulated—½ watt—Package of 5 (R11)	1.00
12841	Resistor—390 ohm—carbon type—1/10 watt—Package of 5 (R10)	.75
12265	Resistor—10,000 ohm—insulated—½ watt—Package of 5 (R5, R7)	1.00
12412	Resistor—47,000 ohm—insulated—½ watt—Package of 5 (R12)	1.00
12696	Resistor—68,000 ohm—insulated—½ watt—Package of 5 (R2)	1.00
11297	Resistor—330,000 ohm—carbon type—1/10 watt—Package of 5 (R6)	.75
11452	Resistor—470,000 ohm—carbon type—1/10 watt—Package of 5 (R1)	.75
12285	Resistor—470,000 ohm—insulated—½ watt—Package of 5 (R8, R9)	1.00
12013	Resistor—1 meg—carbon type—1/10 watt—Package of 5 (R15)	.75
12845	Resistor—Wire wound 40 ohms (R3)	.40
12008	Shield—I.F. transformer shield for Stock No. 12839	.28
12408	Shield—I.F. transformer shield for Stock No. 12840	.28
12218	Shield—Radiotron shield	.15
12607	Shield—Shield top for Stock No. 12839	.30
12007	Spring—Retaining spring of core Stock No. 12006—Package of 10	.36
4786	Socket—6-contact 43 or 25Z5 radiotron socket	.15
4787	Socket—7-contact 6A7 or 6F7 radiotron socket	.15
12846	Socket—Dial lamp socket	.25
12839	Transformer—First I.F. transformer complete (L6, L7, C12, C13, R6, R10)	2.30
12840	Transformer—Second I.F. transformer complete (L8, L9, C16, R13)	1.50
12497	Trap—Wave trap (L1)	.70
12836	Volume Control and power switch (R4, S1)	1.10
	REPRODUCER ASSEMBLIES (M80864-1)	
12499	Coil—Field coil (L12)	1.60
12731	Coil—Neutralizing coil (L11)	.22
12498	Cone—Reproducer cone and dust cap (L10)	1.20
9684	Reproducer Complete	2.25
12500	Transformer—Output transformer (T1)	1.60
	REPRODUCER ASSEMBLIES (M80864-2)	
13149	Coil—Reproducer field coil (L12)	1.60
13150	Coil—Reproducer neutralizing coil (L11)	.25
13148	Cone—Reproducer cone complete (L10)	1.25
9750	Reproducer—Speaker complete	5.50
13151	Transformer—Output transformer (T1)	1.60
	MISCELLANEOUS ASSEMBLIES	
12834	Dial—Station selector dial scale (4X and 4X3)	.50
12935	Dial—Station selector dial scale (Used on 4X4 only)	.55
12833	Knob—Station selector knob—Package of 5 (4X and 4X3)	.50
12934	Knob—Station selector knob—Package of 5 (4X4 only)	.45
12933	Knob—Volume control knob—Package of 5 (4X4 only)	.45
12673	Knob—Volume control knob—Package of 5 (4X and 4X3)	.58
12835	Screw—Chassis mounting screw and washers—Package of 10	.30
4119	Screw—Set screw for knob Stock No. 12673, 12833, 12933 and 12934—Package of 20	.38

The prices quoted above are subject to change without notice.

©John F. Rider, Publisher

MODELS 4X,4X3,4X4
Schematic,Data
Chassis Wiring

RCA MFG. CO., INC.

Figure 1—Schematic Circuit Diagram

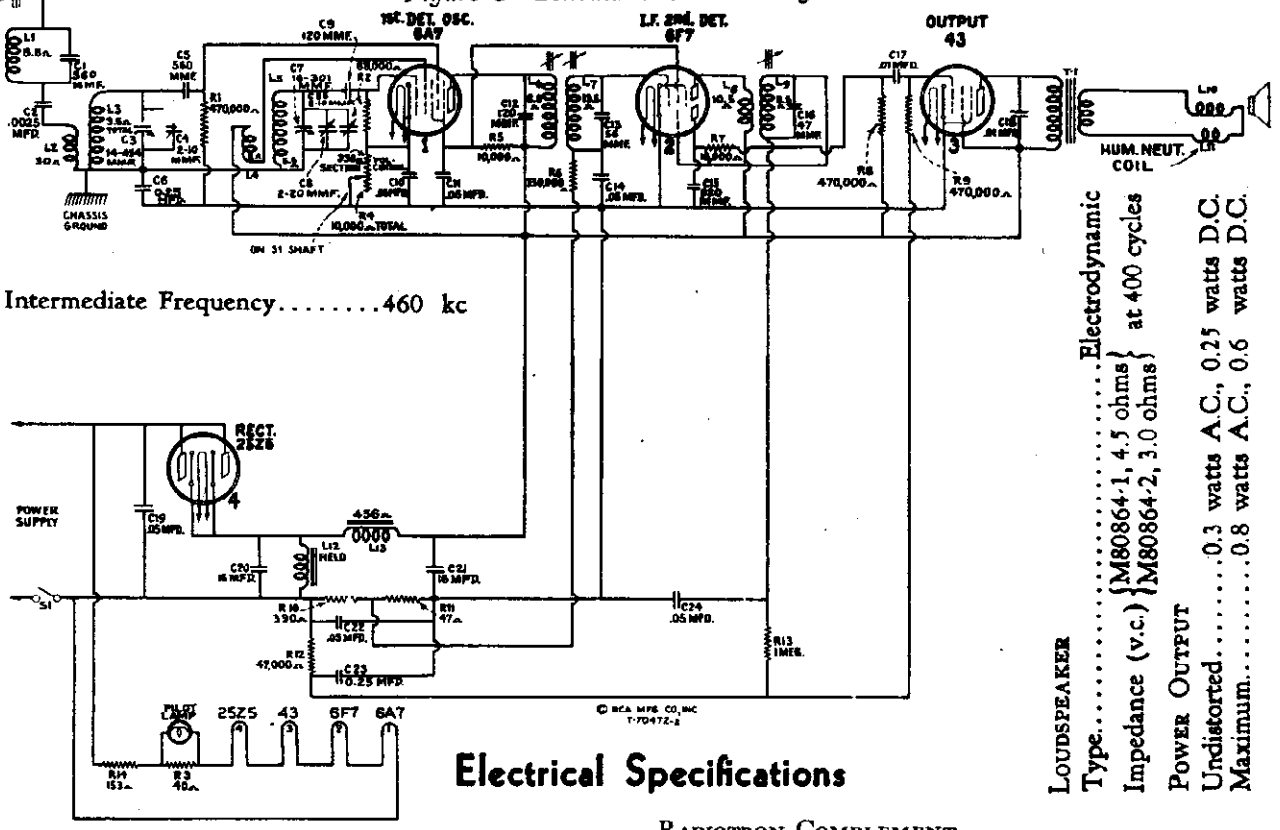

Intermediate Frequency.....460 kc

LOUDSPEAKER
Type.....Electrodynamic
Impedance (v.c.) {M80864-1, 4.5 ohms / M80864-2, 3.0 ohms} at 400 cycles
POWER OUTPUT
Undistorted.....0.3 watts A.C., 0.25 watts D.C.
Maximum.....0.8 watts A.C., 0.6 watts D.C.

Electrical Specifications

FREQUENCY RANGE
"Standard Broadcast" (A)..... 540-1,720 kc

ALIGNMENT FREQUENCIES
"Standard Broadcast" (A)...1,500 kc (osc. and ant.)

RADIOTRON COMPLEMENT
(1) RCA-6A7.....First Detector–Oscillator
(2) RCA-6F7.....I. F. and Second Detector
(3) RCA-43.....Power Output
(4) RCA-25Z5.....Half-wave Rectifier

Pilot Lamp.....Mazda No. 40, 6.3 volts, 0.15 ampere
Power Supply Rating (105-125 volts)..... 50-60 cycles—55 watts, D.C.—50 watts

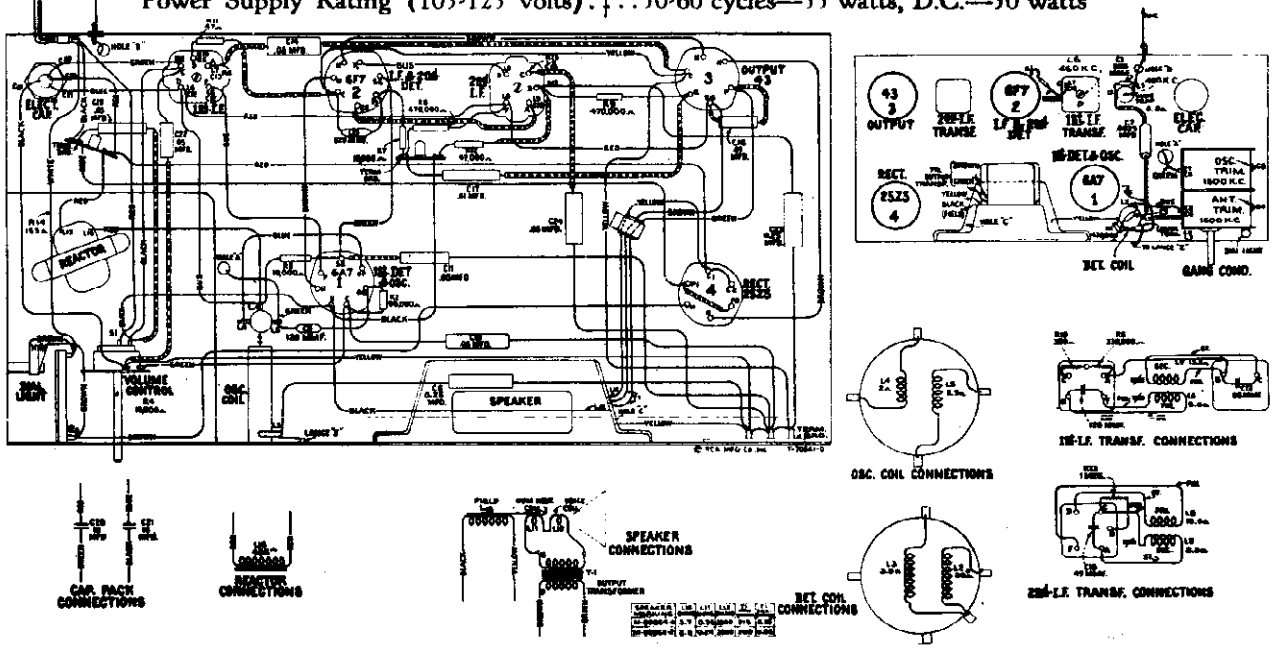

Figure 2—Chassis Wiring Diagram, Radiotron, Coil, and Trimmer Locations

©John F. Rider, Publisher

MODELS 4X,4X3,4X4
Socket,Trimmers
Voltage,Resistance

RCA MFG. CO., INC.

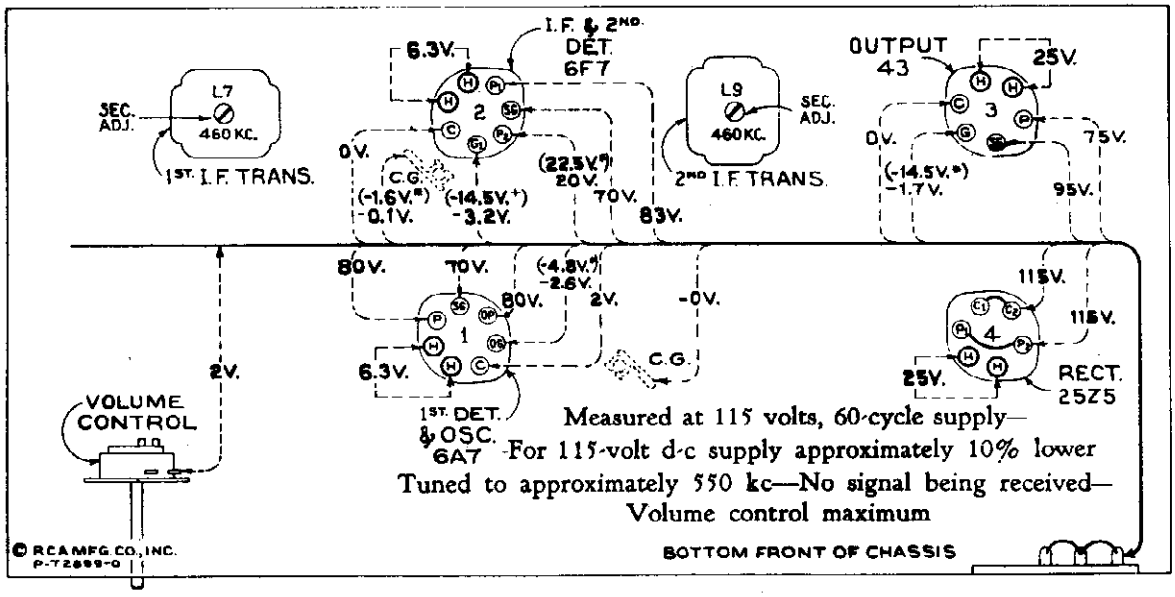

Figure 4—Radiotron Socket Voltages and Trimmer Locations

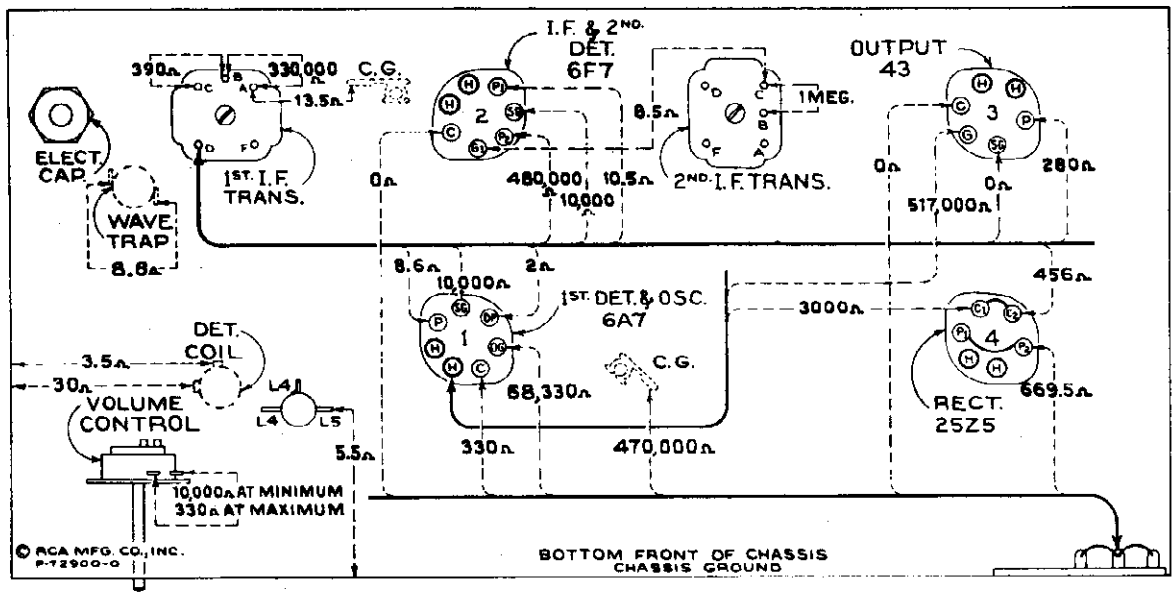

Figure 3—Resistance Diagram

Power supply disconnected—Radiotrons in sockets—Tuning condenser in full-mesh
Volume control maximum

Mechanical Specifications

Cabinet Dimensions	Model 4X	Model 4X3	Model 4X4
Height	10⅞ inches	12 inches	10½ inches
Width	8 5/16 inches	7½ inches	7⅜ inches
Depth	5⅝ inches	5⅛ inches	5⅝ inches
Weights			
Net	9 pounds	9 pounds	8½ pounds
Shipping	11 pounds	11 pounds	10½ pounds

Chassis Base Dimensions ..... 9¼ inches x 4⅝ inches x 1½ inches
Over-all Height of Chassis ..... 5¾ inches
Operating Controls ..... (1) Power Switch-Volume, (2) Tuning

©John F. Rider Publisher

©John F. Rider, Publisher

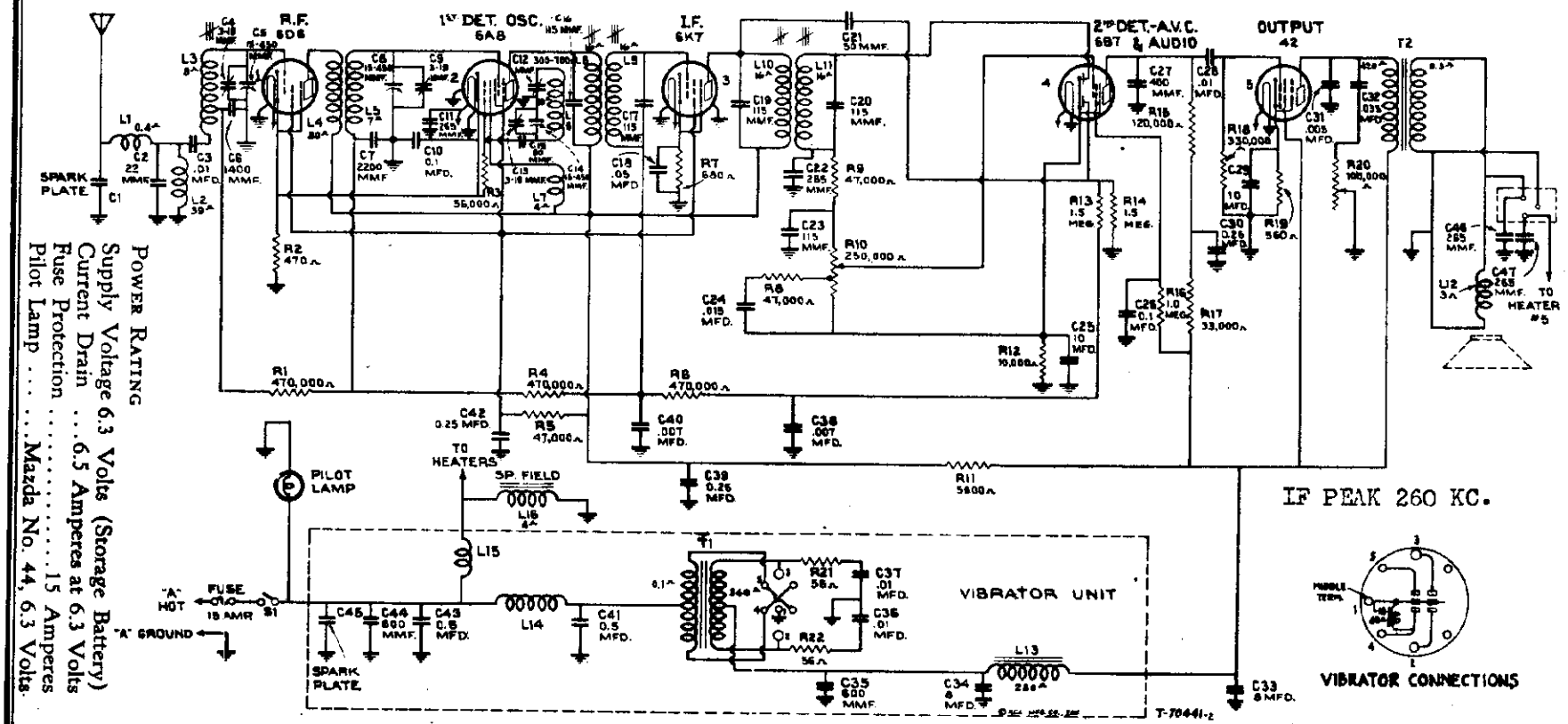

Figure 1—Schematic Circuit Diagram

Certain automobile installations require change of value of capacitor C-3. See note in text under "Service Data."

Electrical Specifications

RADIOTRON COMPLEMENT

(1) RCA-6D6.....Radio Frequency Amplifier
(2) RCA-6A8.....First Detector–Oscillator
(3) RCA-6K7.....Intermediate Amplifier
(4) RCA-6B7..Second Det., A-F Amp., and A.V.C.
(5) RCA-42.....Power Output

Tuning Range .....540 to 1,600 kc.

OUTPUT RATING

Maximum .....4 Watts
Undistorted .....2.25 Watts

LOUDSPEAKER

Type .....Electrodynamic
Impedance (V. C.).....3 Ohms at 400 Cycles

ALIGNMENT FREQUENCIES

I. F. Transformers .....260 kc.
Oscillator Coil .....600 kc. and 1,400 kc.
Detector Coil .....1,400 kc.
Antenna Coil .....1,400 kc.

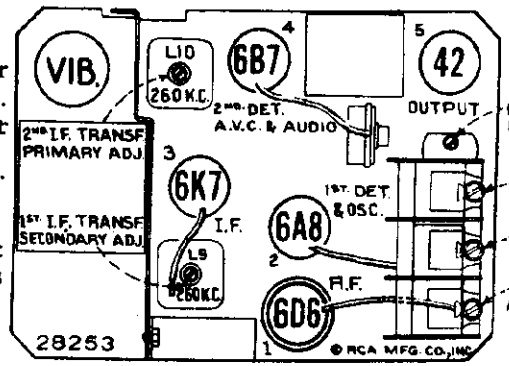

Figure 3—Radiotron, Coil, and Trimmer Locations

POWER RATING

Supply Voltage 6.3 Volts (Storage Battery)
Current Drain ...6.5 Amperes at 6.3 Volts
Fuse Protection .....15 Amperes
Pilot Lamp .....Mazda No. 44, 6.3 Volts

MODEL 5M

Chassis Wiring

RCA MFG. CO., INC.

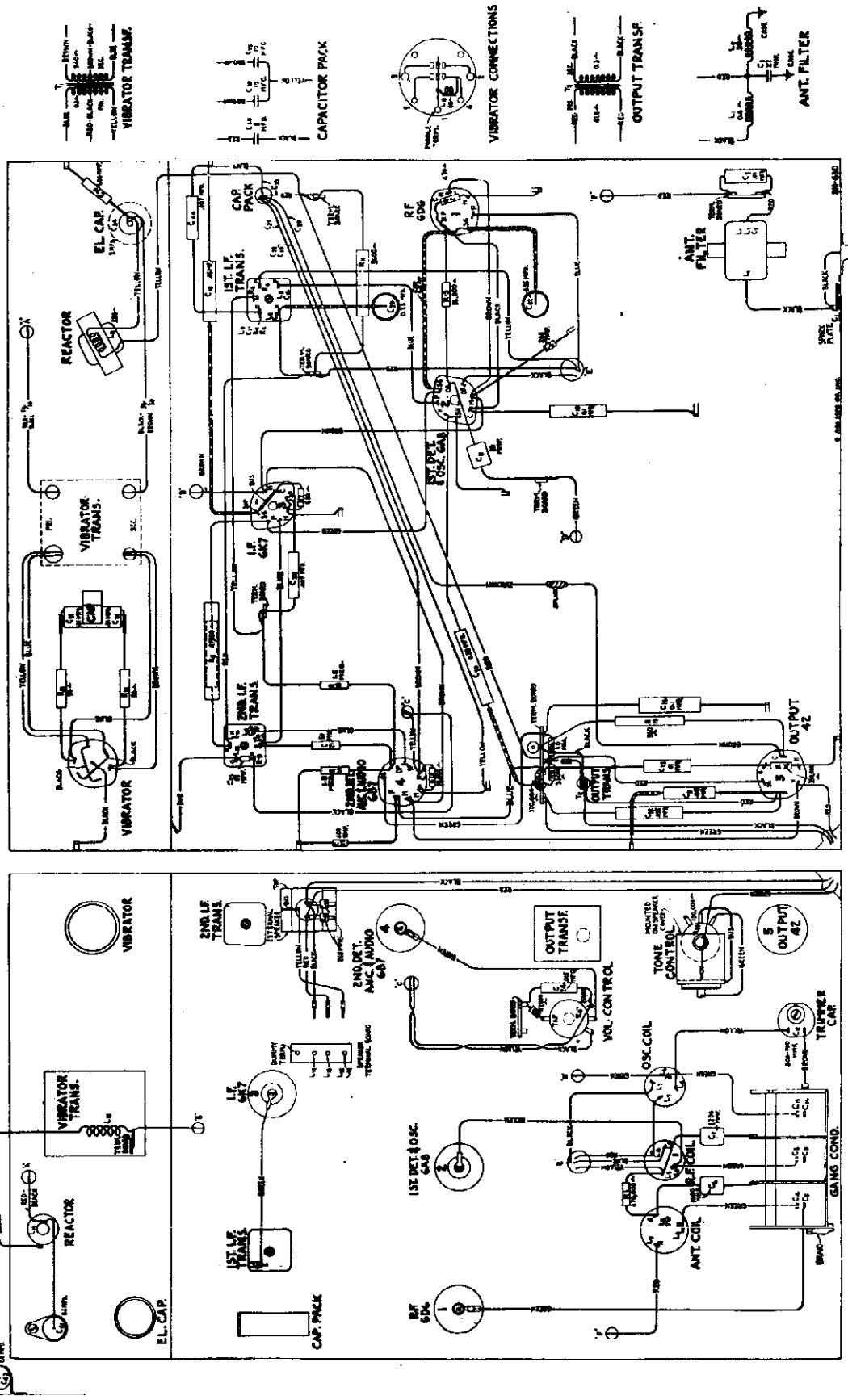

Figure 2—Chassis Wiring Diagram

Mechanical Specifications

WEIGHT

Receiver and Accessories Complete ..... 23½ pounds

Complete Equipment Packed for Shipment ..... 26 pounds

RECEIVER CASE DIMENSIONS

Height ..... 7 Inches Width ..... 10½ Inches Depth ..... 7⅛ Inches

OPERATING CONTROLS ..... (1) Power Switch–Volume, (2) Tuning, (3) High-Frequency Tone

TUNING DRIVE RATIO 12-to-1

©John F. Rider, Publisher

RCA MFG. CO., INC.

MODEL 5M
Socket, Voltage
Loudspeaker, Trimmers

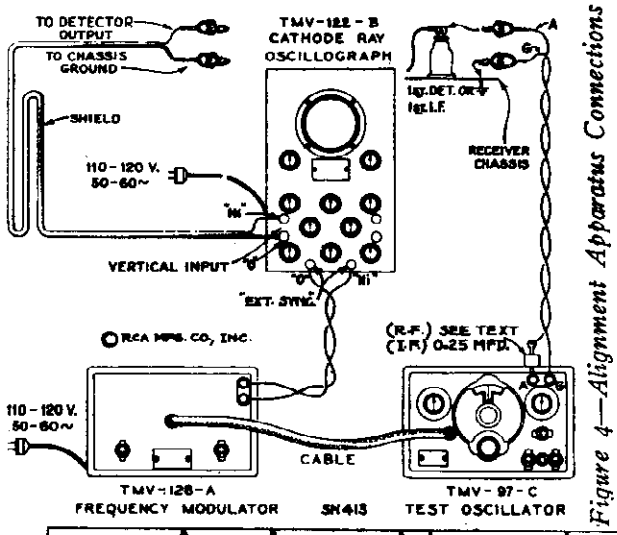

Figure 4—Alignment Apparatus Connections

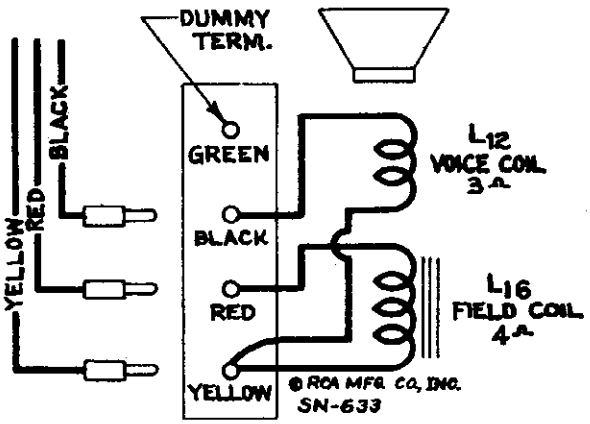

Figure 6—Loudspeaker Schematic and Wiring

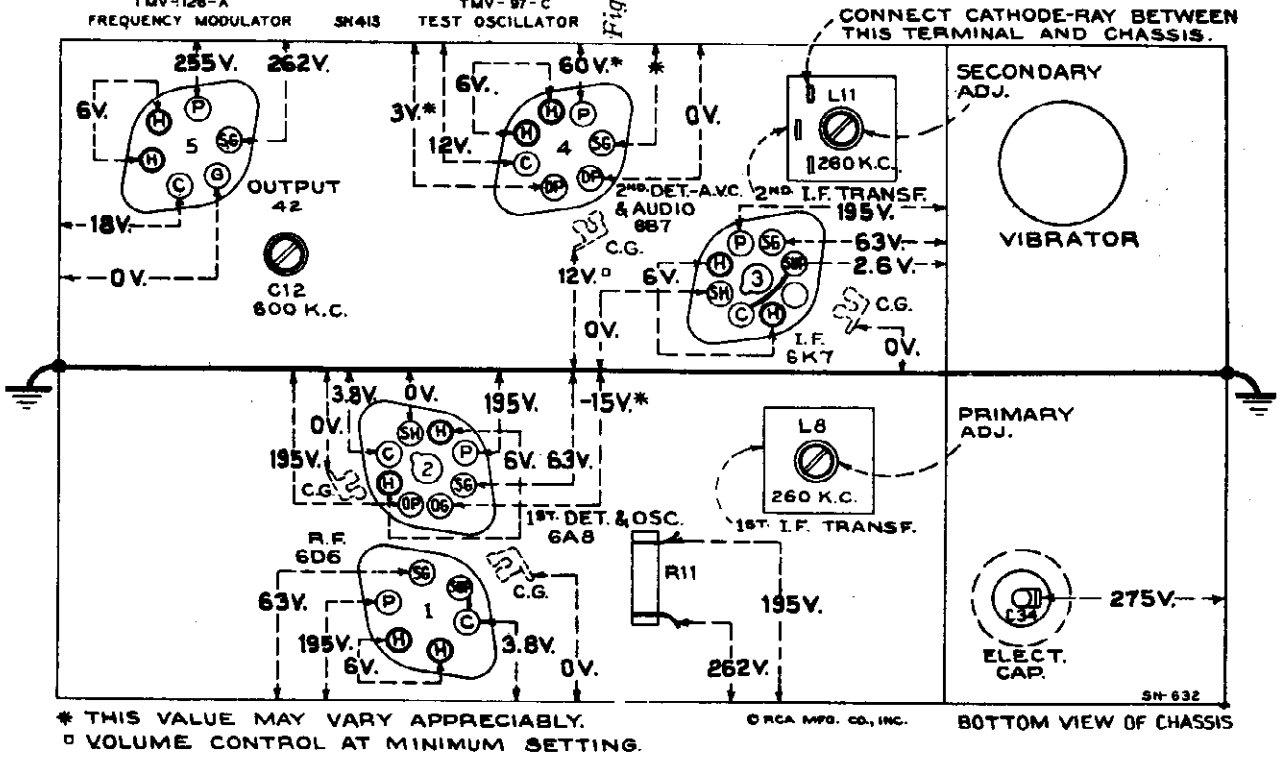

Figure 5—Radiotron Socket Voltages and Trimmer Locations

(Measured at 6.3 volts battery supply—Volume Control Maximum—No Signal)

Radiotron Socket Voltages

Operating conditions of the basic circuits of this instrument may be determined by measuring the voltages applied to the tube elements. Figure 5 shows the voltage values from the socket contacts to ground and appearing across the heater contacts (H-H). Each value as specified should hold within ±20% when this instrument is normally operative, with all tubes intact and rated voltage applied. Variations in excess of this limit will usually be indicative of trouble.

The voltages given on this diagram are actual measured voltages, and are obtained with the voltmeter load in the circuit.

To fulfill the conditions under which the d-c voltages were measured requires a 1,000-ohm-per-volt d-c voltmeter having ranges of 10, 50, 250, and 500 volts. Voltages below 10 volts should be measured on the 10-volt scale; between 10 and 50 on the 50-volt scale; between 50 and 250 on the 250-volt scale; and above 250 on the 500-volt scale.

For meters of the 1,000-ohm-per-volt type, but ranges other than above, use the nearest ranges to those specified. If the range is higher the voltage may be higher, if the range is lower the voltage may be lower; either condition depending on the percentage of circuit current drawn by the meter.

©John F. Rider, Publisher

MODEL 5M

Circuit Data

Alignment, Notes

RCA MFG. CO., INC.

General Description

Model 5M is a single-unit receiver containing the radio chassis, power conversion system, and loud-speaker all in one housing. A convenient three-contact loudspeaker receptacle installed on the chassis case permits the addition of a remote dynamic loud-speaker if desired.

Engineering features incorporated in this instrument are: The inclusion of ignition suppression means within the circuits of the receiver; reduction of power line modulation in antenna circuit; improved high-gain molded core antenna coil; permeability tuned intermediate frequency transformers; continuously variable high-frequency tone control; and a "plug-in" type of synchronous rectifier-vibrator for obtaining high-voltage supply. Correct arrangement of parts, adequate shielding, and the ingenious insertion of filters at proper points in the circuit insure minimum disturbances from apparatus associated with the electrical circuits of the automobile and from adjacent power lines.

This receiver is housed in a substantial metal case. Removable covers permit ready access to the under and top sides of the chassis. Flexible shafts interconnect the operating head to the controlled devices within the receiver housing. The unit is adaptable for mounting on either the left-hand or the right-hand side of the firewall as local conditions demand.

Circuit Arrangement

The schematic and wiring layouts of the electrical circuit are shown in Figures 1 and 2, respectively. From these diagrams it may be seen that five Radiotrons are incorporated in the basic superheterodyne circuit. In sequence, there is an r-f stage, a dual first-detector oscillator stage, a single i-f stage, a second-detector-audio-amplifier-a.v.c. stage, and a pentode power output stage. The power supply system contains a mechanical interrupter and rectifier. The following circuit features are of particular importance:

Noise Filter—Reduction of ignition interference and similar disturbances are brought about by filter arrangements in the antenna input circuit and the "A" battery input lead. The antenna filter, L-1, C-1, and C-2, is a "low-pass" type, having an acceptance band below 1,600 kc. The inductance L-2 is for the purpose of shunting out power line hum pickup.

Tuned Circuits—There are seven resonant circuits in the radio frequency end of the receiver. The r-f, first detector, and oscillator grid circuits are tuned by a three-gang tuning condenser. The remaining tuned circuits consist of the primary and secondary windings of the i-f transformers which resonate with fixed condensers and are tuned by molded cores to a nominal frequency of 260 kilocycles.

Detection—Detection takes place as the result of the rectifying action of one of the diodes of the RCA-6B7 tube, the current being developed through resistors R-9 and R-10. The audio and d-c components of the detected signal are selected from the manual volume control resistor (R-10) by its movable arm, and applied to the control grid of the RCA-6B7; amplification results and the signal passes on to the power output stage. The d-c applied to the grid prevents overload as the volume control is advanced.

A.V.C.—The a.v.c. diode of the RCA-6B7 tube is coupled through capacitor C-21 to the primary of the second r-f transformer. Due to the rectifying action of this diode, a current is developed through resistor R-14. The d-c voltage drop in this resistor is used for automatically regulating the control grid bias of the r-f, first detector, and i-f stages, the voltage being applied through a suitable filter network. Due to the fact that the a.v.c. diode returns through resistor R-14 to a point which is 12 volts negative with respect to its cathode, the a.v.c. action is delayed until the input signal reaches a predetermined level. This gives more uniform output for widely varying signal strengths into the antenna.

Audio System—As mentioned under "Detection" the audio component of the detected signal is selected from the manual volume control and applied to the control grid of the RCA-6B7 tube. The plate circuit of this tube is connected through capacitor C-28 to the control grid of the pentode power output tube, RCA-42. This tube is coupled through the output transformer T-2 to the loudspeaker.

SERVICE DATA

NOTE: Certain models of 1936 automobiles are equipped with "high-capacitance type" (400 mmfd. or greater) built-in antennas. The 1936 models of Dodge, De Soto, and Chrysler are examples of automobiles so equipped. Installation of receiver in automobiles with such "high-capacity" antennas necessitates the following modification of the antenna circuit of the receiver to suit the characteristics of the antenna installation:

Remove the tubular paper-covered capacitor C-3 (.01 mfd.). Figure 2, and replace with the small molded type capacitor (500 mmfd.) furnished with Escutcheon Kit for respective model of automobile.

The various diagrams of this booklet contain such information as will be needed to locate causes for defective operation when such develops. The ratings of the resistors, capacitors, coils, etc., are indicated adjacent to the symbols signifying these parts on the diagrams. Identification titles, such as R-1, L-2, C-1, etc., are provided for reference between the illustrations and the Replacement Parts List. The coils, reactors, and transformer windings are rated in terms of their d-c resistances only. Ratings of less than one ohm are generally omitted.

Alignment Procedure

There are four alignment trimmers provided in the antenna, coil, detector coil, and oscillator coil tuned circuits. The i-f transformer adjustments are made by means of four screws attached to molded cores.

NOTE: The antenna coil has a molded core which is adjusted at the factory for the correct inductance. This adjustment should not be disturbed.

All of the adjustable circuits of this receiver have been properly aligned at the factory to give correct performance and their settings should remain intact indefinitely when the receiver is used under ordinary conditions. However, necessity for re-adjustment may occasionally occur from continued extremes of climate, tampering, purported alteration for service purposes, or after repairs have been made to the r-f or i-f tuned circuits. Improper alignment usually causes the receiver to be insensitive, non-selective, and subnormal in respect to tone quality. Such indications will usually exist simultaneously.

In re-adjusting the tuned circuits, it is important to apply a definite procedure and to use adequate and reliable test equipment. A standard test oscillator, such as the RCA Stock No. 9995, will be required as the source of signal at the specified alignment frequencies. Means for indication of the receiver output during alignment is also necessary to accurately show when the correct point of adjustment is reached. Two indication methods are applicable—one requires use of the cathode-ray oscillograph, and the other requires a voltmeter or glow type indicator. The cathode-ray alignment method is advantageous in that the indication provided is in the form of a wave image which represents the resonance characteristics of the circuits being tuned. This type of alignment is possible through use of apparatus such as the RCA Stock No. 9538 Frequency Modulator and the RCA Stock No. 9545 Cathode-Ray Oscillograph. Alignment by the output meter method should be indicated by an instrument such as the RCA Stock No. 4317 Neon Glow Indicator. The two procedures are outlined as follows:

CATHODE-RAY ALIGNMENT

Attach the cathode-ray oscillograph vertical input terminals to the second detector output, with the "Hi" connected to the junction of the two resistors, R-9 and R-10, and the "0" connected to the receiver chassis. Advance the vertical amplifier gain control of the oscillograph to full-on, allowing it to remain at such position for all adjustments. Turn the vertical "A" amplifier to "On." Set the oscillograph power switch to "On" and adjust the intensity and focusing controls to give a sharply defined spot on the screen. Interconnect the frequency modulator impulse generator terminals to the oscillograph "Ext. Sync" terminals, as shown by Figure 4.

I-F Adjustments

(a) Connect the output of the test oscillator to the control grip cap of the i-f tube (RCA-6K7) through a 0.25 mfd. capacitor and connect the ground of the oscillator to the receiver chassis. Tune the oscillator to 260 kc., place its modulation switch to "On" and its output range switch to "Hi." The frequency modulator must not be connected to the oscillator for the preliminary adjustments.

(b) Set the cathode-ray oscillograph horizontal "B" amplifier to "Timing" and the synchronizing switch (timing) to "Int." Place the synchronizing input and frequency controls to about their mid-positions. Turn the range switch to its No. 1 position.

(c) Increase the output of the oscillator until a deflection is noticeable on the oscillograph screen. The figure obtained represents several waves of the detected signal, the amplitude of which may be observed as an indication of output. Cause the wave image formed (400-cycle waves) to be spread completely across the screen by advancing the horizontal "B" gain control. The image should be synchronized and made to remain motionless by adjustment of the synchronizing input and frequency controls.

(d) Adjust the two screws (attached to molded cores) of the second i-f transformer, one on top and one on bottom, to produce maximum vertical deflection of the oscillographic wave which is present on the screen. This adjustment places the transformer in exact resonance with the 260 kc. signal.

(e) The sweeping operation should follow using the frequency modulator. Shift the oscillograph synchronizing switch to "Ext.", change its range switch to No. 2 position and set the frequency control to its mid-position. Place the frequency modulator in operation, with its sweep range switch in the "Lo" position. Interconnect the test oscillator and frequency modulator with the special shielded patch cord provided. Turn the oscillator modulation switch to "Off."

(f) Increase the frequency of the test oscillator by slowly turning its tuning control until two separate, distinct, and similar waves appear on the screen. These waves will be identical in shape, but will be totally disconnected and appearing in reversed positions. They will have a common base line which is discontinuous. Adjust the frequency and synchronizing input controls of the oscillograph to get the proper waves and to make them remain motionless on the screen. Cautious increasing the oscillator frequency until the forward and reverse curves move together and overlap, with their highest points exactly coincident. This condition will obtain at an oscillator setting of approximately 360 kc.

(g) With the images established as in (f), re-adjust the two screws on the second i-f transformer so that they cause the curves on the oscillograph screen to become exactly coincident throughout their lengths and have maximum amplitude.

(h) Without altering the adjustments of the apparatus, shift the output connections of the oscillator to the input of the i-f system, i. e., between the first detector (RCA-6A8) control grid and ground. Regulate its output so that the amplitude of the oscillographic image is approximately the same as used above for adjustment (g) of the second i-f transformer.

(i) The two first i-f transformer adjustment screws, one on top and one on bottom, should then be adjusted so that they cause the forward and reverse curves to become coincident throughout their lengths and have maximum amplitude. The composite wave obtained in this manner represents the resonance characteristic of the total i-f system. Lack of symmetry or irregularity of the resultant image will indicate the presence of a defect in the i-f system.

R-F Adjustments

NOTE: Before making r-f adjustments, it may be advisable to replace the bottom cover to eliminate vibrator interference.

(a) Adjust the dial pointer on the remote control head by the following procedure: Rotate tuning knob to its extreme clockwise position irrespective of location of pointer on dial. Now turn the pointer adjusting screw in the center of the back of the control unit until the pointer is at the end calibration mark beyond the 55 on dial scale.

(b) Attach the output of the test oscillator to the receiver input, i. e., between the antenna and ground terminals, with a 175 mmfd. capacitor in series with antenna lead.

NOTE: For r-f alignment of receivers in which the tubular paper condenser C-3 (.01 mfd.) has been replaced by the small molded condenser, 500 mmfd. (change easily identified by reference to Figure 2 and bottom of chassis), use a .001 mfd. capacitor instead of the 175 mmfd. capacitor in series with the antenna lead and test oscillator.

There should be a shunt capacitor of 50 or 60 mmfd. from the antenna lead at the receiver to ground. Accurately tune the oscillator to 1,400 kc. The oscillograph should be left connected to the second detector output circuit as for the above i-f adjustments. Return the synchronizing switch to its "Int." position and turn the range switch to its No. 1 position.

(c) Tune the receiver to a dial reading of 1,400 kc. Then regulate the oscillator output so as to increase the amplitude of the waves on the oscillograph screen to a conveniently observable size. The several waves of detected signal, as appearing on the screen, should be synchronized by operation of the synchronizing and frequency controls. Trimmers, C-13, C-9, and C-4, of the oscillator, detector, and antenna coils should then be adjusted so that each causes maximum vertical deflection (amplitude) of the images.

(d) The oscillator modulation should then be turned to "Off" and the frequency modulator placed in operation, connected to the oscillator with the shielded patch cord. Change the oscillograph synchronizing switch to "Ext.", set its range switch to its No. 2 position and the frequency control slightly above its mid-position.

(e) Increase the frequency of the test oscillator gradually, until the point is reached where the two similar, distinct, and separate wave images appear on the screen and become coincident at their highest points. This will occur at an oscillator setting of approximately 1,500 kc. These waves should be synchronized on the oscillograph screen by careful re-adjustment of the synchronizing and frequency controls. Re-adjust trimmers, C-13, C-9, and C-4, to produce complete coincidence at maximum amplitude of the two waves.

(f) Disconnect the frequency modulator from the oscillator. Place the modulation switch of the oscillator to "On" and tune the oscillator to 600 kc. Set the synchronizing switch of the oscillograph to "Int." and turn the range switch to No. 1 position.

(g) Tune the receiver station selector control so as to pick up the 600 kc. signal, disregarding the dial reading at which it is best received.

(h) Change the oscillograph synchronizing switch to "Ext." and place the oscillator modulation switch to "Off." Interconnect the frequency modulator and oscillator with the special shielded patch cord. Return the range control of the oscillograph to its No. 2 position and set the frequency control slightly above its mid-position.

(i) Shift the test oscillator to its 200-400 kc. range and tune it to the point at which the forward and reverse waves show on the oscillograph screen. This condition will obtain at an oscillator setting of approximately 230 kc. The signal obtained from the oscillator for this adjustment will be the third harmonic of 200 kc. An increase in the oscillator output may be necessary. The trimmer C-12 should then be adjusted to the point which produces maximum amplitude of the oscillographic images. It will not be necessary to rock the tuning control for this adjustment, inasmuch as the frequency modulator is varying the signal in an equivalent manner.

(j) Retune trimmers C-13, C-9, and C-4 as in (c), (d), and (e) to correct for any change in high-frequency alignment which may have been caused by the adjustment of C-12.

After the receiver has been replaced in the car, it may be necessary to make a final correction of the dial pointer by tuning in a station of known frequency and adjusting the pointer by means of the slotted screw head on the rear of the control head.

OUTPUT METER ALIGNMENT

Place the receiver in operation with its two covers removed. Attach the output indicator across the loudspeaker voice coil circuit or across the output transformer primary. Advance the receiver volume control to its maximum position, letting it remain in such position for all adjustments. For each adjusting operation, regulate the test oscillator output control so that the signal level is as low as possible and still observable at the receiver output. Use of such small signal will obviate broadness of tuning which would otherwise result from a.v.c. action on a stronger one.

I-F Adjustments

(a) Connect the output of the test oscillator to the control grid cap of the i-f tube (RCA-6K7) through a 0.25 mfd. capacitor and connect the ground of the oscillator to the receiver chassis. Adjust the frequency of the oscillator to 260 kc. Tune the receiver to a point where no interference is received from the heterodyne oscillator or local stations.

(b) Adjust the two screws (attached to molded cores) of the second i-f transformer, one on top and one on bottom, until maximum output is produced by the indicating device.

(c) Remove the oscillator from the i-f tube input and connect it between the control grid cap of the first detector tube (RCA-6A8) and chassis ground, using the 0.25 mfd. capacitor as previously. Allow its tuning to remain at 260 kc. Tune the receiver to avoid interference as in (a).

(d) Adjust the two screws of the first i-f transformer for maximum (peak) receiver output. The indication for this adjustment will be broad, due to the "flat-top" characteristic of the i-f system. The two screws should, therefore, be very carefully adjusted so that the indicator remains fixed at maximum as the oscillator is shifted through a range 2 kc. above and below its normal setting of 260 kc. An irregular double-peaked indication is to be avoided.

R-F Adjustments

NOTE: Before making r-f adjustments, it may be advisable to replace the bottom cover to eliminate vibrator interference.

(a) Adjust the dial pointer on the remote control head by the following procedure. Rotate tuning knob to its extreme clockwise position irrespective of location of pointer on dial. Now turn the pointer adjusting screw in the center of the back of the control unit until the pointer is at the end calibration mark beyond the 55 on dial scale.

(b) Connect the output of the test oscillator to the antenna-ground terminals of the receiver with a 175 mmfd. capacitor in series with the antenna lead.

NOTE: For r-f alignment of receivers in which the tubular paper condenser C-3 (.01 mfd.) has been replaced by the small molded condenser, 500 mmfd. (change easily identified by reference to Figure 2 and bottom of chassis), use a .001 mfd. capacitor instead of the 175 mmfd. capacitor in series with the antenna lead and test oscillator.

There should be a shunt capacitor of 50 or 60 mmfd. from the antenna lead at the receiver to ground. Tune the oscillator to 1,400 kc. Allow the output indicator to remain attached to the receiver output.

(c) Tune the receiver so that the dial reading is 1,400 kc. Then adjust the oscillator, detector, and antenna coil trimmers, C-13, C-9, and C-4 respectively, tuning each to the point producing maximum indicated receiver output.

(d) Shift the oscillator frequency to 600 kc. and tune the receiver to pick up this signal, disregarding the dial reading at which it is best received. The oscillator series trimmer, C-12, should then be adjusted, simultaneously rocking the receiver tuning control backward and forward through the signal until maximum (peak) receiver output results from the combined operations. The adjustment of C-13, C-9, and C-4 should be repeated as in (c) to correct for any change in its alignment due to the adjustment of C-12.

Final Tuning Dial Adjustment

Final adjustment of the dial pointer may be made during operation after the receiver is installed in automobile. To do this tune in a station of known frequency (say 760 kc.—approximately 76 on dial) as accurately as possible. Now reset the dial pointer to exactly 76 on the dial by means of the adjusting screw at center rear of operating head.

Interrupter

The mechanical interrupter used in the power system is constructed with a plug-in base, so as to be easily removed from the receiver. Its adjustments have been correctly set during manufacture by means of special equipment. In cases of faulty operation of the interrupter, a renewal should be made.

The symmetrical plug-in base on this device permits the unit to be placed in its socket so as to give correct output voltage polarity on an automobile with either a positive or negative "A" ground. For installation with positive "A" ground, insert vibrator so positive (+) symbol is nearest label on vibrator compartment partition; for negative "A" ground, insert with negative (−) symbol nearest label.

Radiotrons

Deterioration of tubes and their approach to failure is usually evidenced by noisy or intermittent operation, loss of sensitivity and distorted tone quality. When suspected as faulty, the tubes should be removed from the receiver and checked with standard tube testing apparatus. It is not feasible to test the tubes while in the receiver, due to measurement inaccuracies which would result from the effects of the circuits.

Tuning Condenser Drive

Smooth control should be obtained over the entire tuning range of the variable condenser. If irregularity is present, check the action of the gear mechanism for binding or backlash at every point within the tuning range. A band may be due to improper mesh between the worm gear and the large gears on the condenser shaft. To correct such a condition, loosen the three screws holding the gear plate and adjust the mesh of the gears to a position which gives smooth operation. Gear backlash is prevented by the small compression spring between the two large gears on the rotor shaft.

Receiver Housing

The screws holding the receiver chassis to the case must all be in place and tightly installed, inasmuch as they appreciably affect the ground resistance of the assembly and will consequently have a bearing on the amount of ignition noise received.

Volume Control and Power Switch

This adjustment is made by turning the small control knob fully clockwise and then fully counter-clockwise. This places the friction clutch mechanism on the volume control in proper alignment.

©John F. Rider, Publisher

REPLACEMENT PARTS

Stock No.	DESCRIPTION	List Price
	RECEIVER ASSEMBLIES	
12511	Cap—Grid contact cap—Package of 5	$0.15
11130	Capacitor—Adjustable capacitor—(C12)	.40
11289	Capacitor—50 Mmfd.—(C21)	.26
12270	Capacitor—80 Mmfd.—(C15)	.28
8076	Capacitor—115 Mmfd.—(C23)	.20
11998	Capacitor—115 Mmfd.—(C16, C17, C19, C20)	.28
11181	Capacitor—265 Mmfd.—(C11, C22, C46, C47)	.20
11171	Capacitor—400 Mmfd.—(C27)	.22
4210	Capacitor—600 Mmfd.—(C35)	.25
4094	Capacitor—690 Mmfd.—(C44)	.26
12268	Capacitor—1,400 Mmfd.—(C6)	.34
12269	Capacitor—2,200 Mmfd.—(C7)	.42
5148	Capacitor—.007 Mfd.—(C38, C40)	.20
4838	Capacitor—.005 Mfd.—(C31)	.20
4858	Capacitor—.01 Mfd.—(C3, C28)	.25
11315	Capacitor—.015 Mfd.—(C24)	.20
5196	Capacitor—.035 Mfd.—(C32)	.18
4836	Capacitor—.05 Mfd.—(C18)	.30
4839	Capacitor—0.1 Mfd.—(C26)	.28
4841	Capacitor—0.1 Mfd.—(C10)	.22
12237	Capacitor—.25 Mfd.—(C39, C42)	1.02
12484	Capacitor—.25 Mfd.—(C30)	.24
5019	Capacitor—0.5 Mfd.—(C41)	.42
12234	Capacitor—8 Mfd.—(C34)	1.34
12233	Capacitor Pack—Comprising 2 sections each, .01 Mfd.—(C36, C37)	1.02
12238	Capacitor Pack—Comprising one 8 Mfd. and two 10 Mfd. sections—(C25, C29, C33)	2.30
12223	Coil—Antenna coil—(L3)	.94
12235	Coil—Choke coil—(L14)	.50
12225	Coil—Oscillator coil—(L6, L7)	.80
12224	Coil—R. F. coil—(L4, L5)	1.32
12220	Condenser—3-gang variable tuning condenser—(C4, C5, C8, C9, C13, C14)	4.50
12006	Core—Adjustable core for I. F. transformer Stock No. 12228 and No. 12229	.22
12289	Coupling—Station selector flexible shaft coupling	.20
12239	Filter—Antenna filter—(L1, L2, C2)	$1.28
12221	Gear—Variable tuning condenser shaft drive gear	.36
12222	Gear—Variable tuning condenser worm gear	.36
12242	Guide—Station selector shaft guide	.18
12483	Pin—Contact pin for speaker leads—Package of 5	.15
12485	Pin—Contact pin for tone control lead—Package of 5	.15
12232	Reactor—Filter reactor—iron core—(L13)	1.10
5034	Resistor—56 ohm—carbon type, ½ watt—(R21, R22)—Package of 5	1.00
12512	Resistor—470 ohm—insulated, ¼ watt—(R2)—Package of 5	1.00
11845	Resistor—560 ohm—carbon type, 1 watt—(R19)—Package of 5	1.10
12262	Resistor—680 ohm—insulated, ¼ watt—(R7)—Package of 5	1.00
8097	Resistor—5,600 ohm—carbon type, 2 watt—(R11)	.25
12288	Resistor—10,000 ohm—insulated, ¼ watt—(R12)—Package of 5	1.00
12454	Resistor—33,000 ohm—insulated, ¼ watt—(R17)—Package of 5	1.00
5132	Resistor—47,000 ohm—carbon type, 1/10 watt—(R8, R9)—Package of 5	.75
12073	Resistor—47,000 ohm—carbon type, 1 watt—(R5)—Package of 5	1.10
12286	Resistor—56,000 ohm—insulated, ¼ watt—(R3)—Package of 5	1.00
12455	Resistor—120,000 ohm—insulated, ¼ watt—(R15)—Package of 5	1.00
12452	Resistor—330,000 ohm—insulated, ¼ watt—(R18)—Package of 5	1.00
11452	Resistor—470,000 ohm—carbon type, 1/10 watt—(R4, R6)—Package of 5	.75
12285	Resistor—470,000 ohm—insulated, ¼ watt—(R1)—Package of 5	1.00
12200	Resistor—1 megohm—insulated, ¼ watt—(R16)—Package of 5	1.00
12287	Resistor—1.5 megohm—insulated, ¼ watt—(R13, R14)—Package of 5	$1.00
3584	Ring—Retaining ring for R. F. or oscillator coil—Package of 5	.40
5129	Ring—Radiotron shield ring—Package of 5	.10
3623	Shield—R. F. or oscillator coil shield	.30
12290	Shield—Radiotron shield	.18
4786	Socket—6-contact 6D6 or 42 Radiotron socket	.15
4787	Socket—7-contact 6B7 Radiotron socket	.15
12227	Socket—8-contact 6A8 or 6K7 Radiotron socket	.18
12241	Socket—Vibrator socket	.18
12226	Stud—Variable tuning condenser mounting stud assembly—Package of 4	.22
12228	Transformer—First I. F. transformer—(L8, L9, C16, C17, R4, R6)	2.24
12364	Transformer—Output transformer—(T2)	1.48
12229	Transformer—Second I. F. transformer—(L10, L11, C19, C20, C22, R9)	2.02
12231	Transformer—Vibrator power transformer—(T1)	3.42
12236	Vibrator—Vibrator complete	4.55
12365	Volume Control—(R10)	1.12
	CONTROL BOX AND FLEXIBLE SHAFT ASSEMBLIES	
12505	Box—Control box complete—less flexible shafts	6.35
12578	Dial—Station selector indicator dial (standard)	.50
12579	Knob—Station selector (tuning) knob (standard)	.28
12580	Knob—Volume control knob (standard)	.28
11891	Lamp—Control box dial lamp—Package of 5	.65
12504	Shaft—Tuning control flexible shaft complete, approx. 21½ in. long	1.20
12503	Shaft—Volume control flexible shaft complete, approx. 21½ in. long	1.20
	REPRODUCER ASSEMBLIES	
12482	Board—Reproducer terminal board	.30
12450	Coil—Field coil—(L16)	1.60
12451	Cone—Reproducer cone complete—(L12)	1.60
9687	Reproducer—Reproducer complete	5.65
	MISCELLANEOUS ASSEMBLIES	
12288	Resistor—10,000 ohm—insulated, ¼ watt—(R12)—Package of 5	1.00
12454	Resistor—33,000 ohm—insulated, ¼ watt—(R17)—Package of 5	1.00
12509	Button—Plug button for receiver housing	$0.16
12444	Cable—Shielded antenna cable, approx. 8 in. long, complete with female section of connector	.58
12473	Cable—Shielded antenna lead-in cable, approx. 31 in. long, complete with 2 male sections of connector	1.12
4288	Cap—Male connector cap for "A" lead or antenna cable—Package of 10	.36
5025	Capacitor—Generator capacitor	.40
4293	Capacitor—Ammeter capacitor	.60
11418	Capacitor—.5 Mfd.—(C43)	.50
4291	Clip—"A" lead ammeter clip—Package of 10	.70
12443	Cover—Receiver housing top cover	.64
12442	Cover—Receiver housing bottom cover assembly	.60
12247	Fastener—Receiver housing top cover fastener—Package of 10	.30
4286	Ferrule—Antenna cable or "A" lead connector ferrule and bushing—Package of 10	.38
5023	Fuse—"A" lead fuse—15 amp.—Package of 5	.40
12449	Grille—Speaker grille assembly	.88
12441	Housing—Receiver housing complete	4.58
4290	Insulator—Fuse connector insulator—Package of 10	.35
4323	Knob—Tone control knob—Package of 5	.70
12445	Lead—"A" lead (set end), approx. 8 in. long, complete with male section of connector	.26
12501	Plate—Name plate and mounting screws	.20
12447	Screw—Speaker mounting assembly—Comprising 1 screw, 1 nut, and 1 lockwasher to mount speaker in case—Package of 4	.26
12252	Screw—No. 8 self-tapping hex. head screw—used on receiver housing—Package of 10	.20
12248	Socket—3-contact socket and bracket assembly for reproducer cable	.20
12502	Socket—Pin socket and bracket assembly for tone control lead	.30
4284	Spring—Antenna cable connector spring—Package of 10	.30
12448	Stud—Receiver mounting stud assembly—Comprising 1 stud, 1 washer, 1 lockwasher and 1 nut	.20
5024	Suppressor—Distributor suppressor	.38
12249	Tone Control—(R20)	.88
4285	Washer—Antenna cable connector insu-	

PRICES ARE SUBJECT TO CHANGE WITHOUT NOTICE

RCA MFG. CO., INC.

MODEL 5T
Parts List

RCA MFG. CO., INC.

REPLACEMENT PARTS

Insist on genuine factory tested parts, which are readily identified and may be purchased from authorized dealers.

Stock No.	Description	List Price
	RECEIVER ASSEMBLIES	
5237	Bushing — Variable condenser mounting bushing assembly—Package of 3	$0.43
11591	Button—Chassis plug button	.10
12118	Cap—Grid contact cap—Package of 5	.15
11465	Capacitor—Adjustable capacitor (C8)	.48
12659	Capacitor—12 Mmfd. (C5)	.20
12661	Capacitor—56 Mmfd. (C1)	.20
12946	Capacitor—133 Mmfd. (C11, C15, C16, C17)	.20
12406	Capacitor—180 Mmfd. (C18)	.26
12662	Capacitor—220 Mmfd. (C21)	.20
12660	Capacitor—1,350 Mmfd. (C10)	.28
4868	Capacitor—.005 Mfd. (C9, C25)	.20
4858	Capacitor—.01 Mfd. (C19, C20, C22)	.25
11451	Capacitor—.017 Mfd. (C26)	.18
4841	Capacitor—.1 Mfd. (C4, C12, C23, C30, C31)	.22
4840	Capacitor—.25 Mfd. (C13, C24)	.30
5170	Capacitor—.25 Mfd. (C14)	.25
11240	Capacitor—10 Mfd. (C28)	1.08
5212	Capacitor—18 Mfd. (C29)	1.16
12648	Coil—Antenna coil—less shield (L2, L3, L4, L5)	1.35
12649	Coil—Oscillator coil—less shield (L6, L7)	1.20
12643	Condenser—2-gang variable tuning condenser (C2, C3, C6, C7)	3.46
5119	Connector—3-contact female speaker cable connector	.25
12006	Core—Adjustable core and stud assembly for I.F. transformer, Stock Nos. 12652 and 12653	.22
12664	Core—Adjustable core and stud assembly for wave trap, Stock No. 12654	.22
12658	Dial—Station selector dial	.65
12656	Drive—Variable condenser drive shaft and pinion	.58
12655	Gear—Large gear located on variable condenser shaft	.34
12657	Indicator—Station selector indicator	.20
5226	Lamp—Dial lamp—Package of 5	.70
12663	Mask—Dial light diffuser, complete with red and green colored screen	.30
12647	Range Switch (S2)	.68
12206	Resistor—270 ohm, carbon type, ¼ watt—Package of 5 (R19)	1.00
12261	Resistor—390 ohm, insulated, ¼ watt—Package of 5 (R20)	1.00
8070	Resistor—22,000 ohm, carbon type, ½ watt—Package of 5 (R3)	1.00
11400	Resistor—27,000 ohm, carbon type, ¼ watt—Package of 5 (R9)	1.00
12011	Resistor—27,000 ohm, carbon type, 1 watt—Package of 5 (R4)	1.10
11282	Resistor—56,000 ohm, carbon type, 1/10 watt—Package of 5 (R6)	.75
5029	Resistor—56,000 ohm, carbon type, ¼ watt—Package of 5 (R1)	1.00
11454	Resistor—6,800 ohm, carbon type, ¼ watt—Package of 5 (R2)	1.00
5145	Resistor—100,000 ohm, carbon type, ¼ watt—Package of 5 (R10, R12)	1.00
11398	Resistor—220,000 ohm, carbon type, 1/10 watt—Package of 5 (R7)	.75
11323	Resistor—270,000 ohm, carbon type, ¼ watt—Package of 5 (R11)	1.00
11172	Resistor—470,000 ohm, carbon type, ¼ watt—Package of 5 (R13)	1.00
11626	Resistor—2.2 megohm, carbon type, ¼ watt—Package of 5 (R5)	1.00
12004	Resistor—Voltage divider resistor — Comprising one 216 ohm, one 27 ohm and one 22 ohm sections (R16, R17, R18)	.45
12650	Shield—Antenna coil shield	.22
12735	Shield—Dial lamp shield—Package of 5	.25
12607	Shield—First I.F. transformer shield top	.30
12008	Shield—First or second I.F. transformer shield	.28
12651	Shield—Oscillator coil shield	.22
12581	Shield—Second I.F. transformer shield top	.36
3950	Shield—6D6 Radiotron shield	.26
3682	Shield—6A7 or 75 Radiotron shield	.22
4794	Socket—4-contact rectifier Radiotron socket	.15
4786	Socket—6-contact 42, 75 and 6D6 Radiotron socket	.15
4787	Socket—7-contact 6A7 Radiotron socket	.15
11199	Socket—Dial lamp socket	.14
12007	Spring—Retaining spring for core, Stock Nos. 12006 and 12664—Package of 10	.36
11460	Tone Control and Switch (S1, S3)	.95
13106	Transformer—First I.F. transformer, complete (L8, L9, C11, C15)	1.60
12644	Transformer—Power transformer, 115 volt, 60 cycle (T1)	4.00
12645	Transformer—Power transformer, 115 volt, 25 cycle (T1)	5.90
12646	Transformer—Power transformer, 240-210-150-125-110 volts, 60 cycle (T1)	6.88
13107	Transformer—Second I.F. transformer, complete (L10, L11, C16, C17, C18, R6, R7)	2.06
12654	Trap—Wave trap (L1)	.75
11237	Volume Control (R8)	1.20
	REPRODUCER ASSEMBLIES	
12641	Board—3-contact reproducer terminal board	.15
12640	Bracket — Output transformer mounting bracket	.18
12012	Coil—Field coil (L14)	1.85
11469	Coil—Neutralizing coil (L12)	.20
12642	Cone—Reproducer cone and dust cap (L13)	.94
5118	Connector—3-contact male speaker cable connector	.25
9699	Reproducer, complete	6.38
11253	Transformer—Output transformer (T2)	1.56
11886	Washer—Spring washer to hold field coil securely—Package of 5	.20
	MISCELLANEOUS ASSEMBLIES	
12639	Escutcheon—Station selector escutcheon and crystal assembly	1.02
12638	Knob—Station selector knob — Package of 5	.58
11347	Knob—Tone control, volume control or range switch knob—Package of 5	.75
11586	Screw—Chassis mounting screw No. 14x1 in.—Package of 10	.22
11349	Spring—Retaining spring for knob, Stock Nos. 11347 and 12638—Package of 5.	.15

Prices quoted above are subject to change without notice.

©John F. Rider Publisher

MODEL 5T
Schematic
Chassis Wiring
Transformer

RCA MFG. CO., INC.

POWER OUTPUT RATING
Undistorted..... 2.0 watts
Maximum..... 4.5 watts

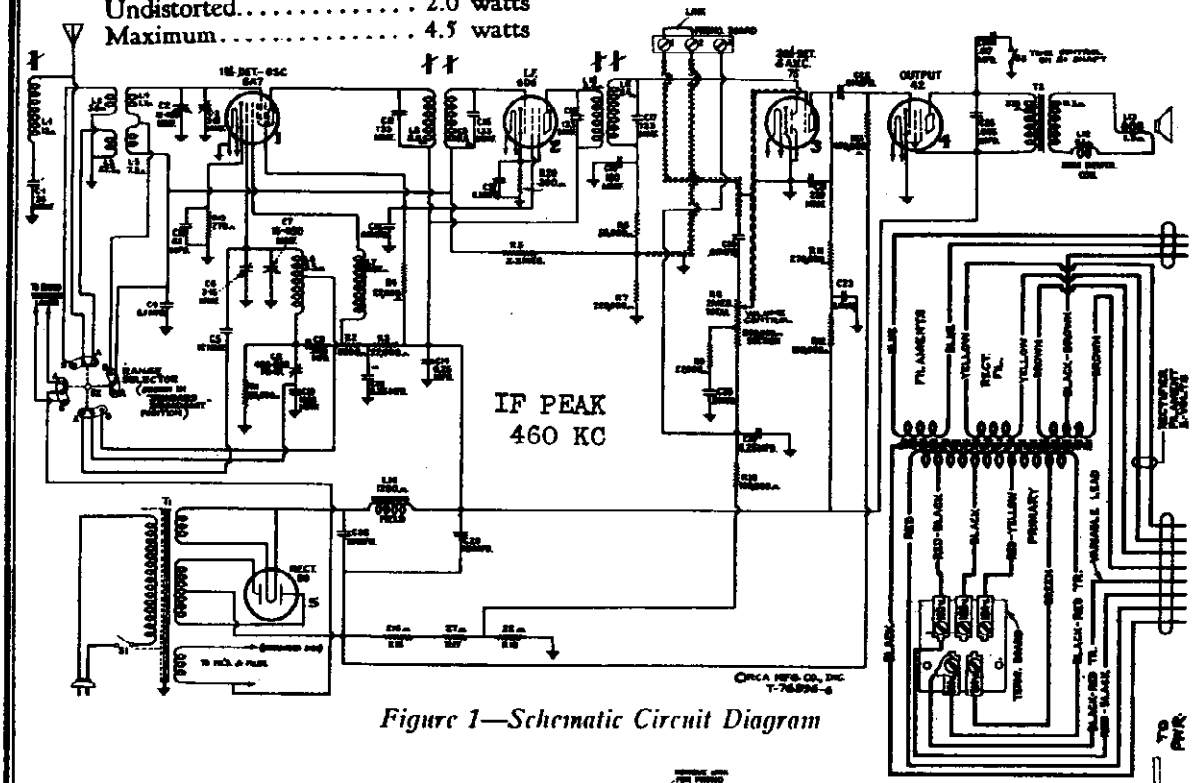

Figure 1—Schematic Circuit Diagram

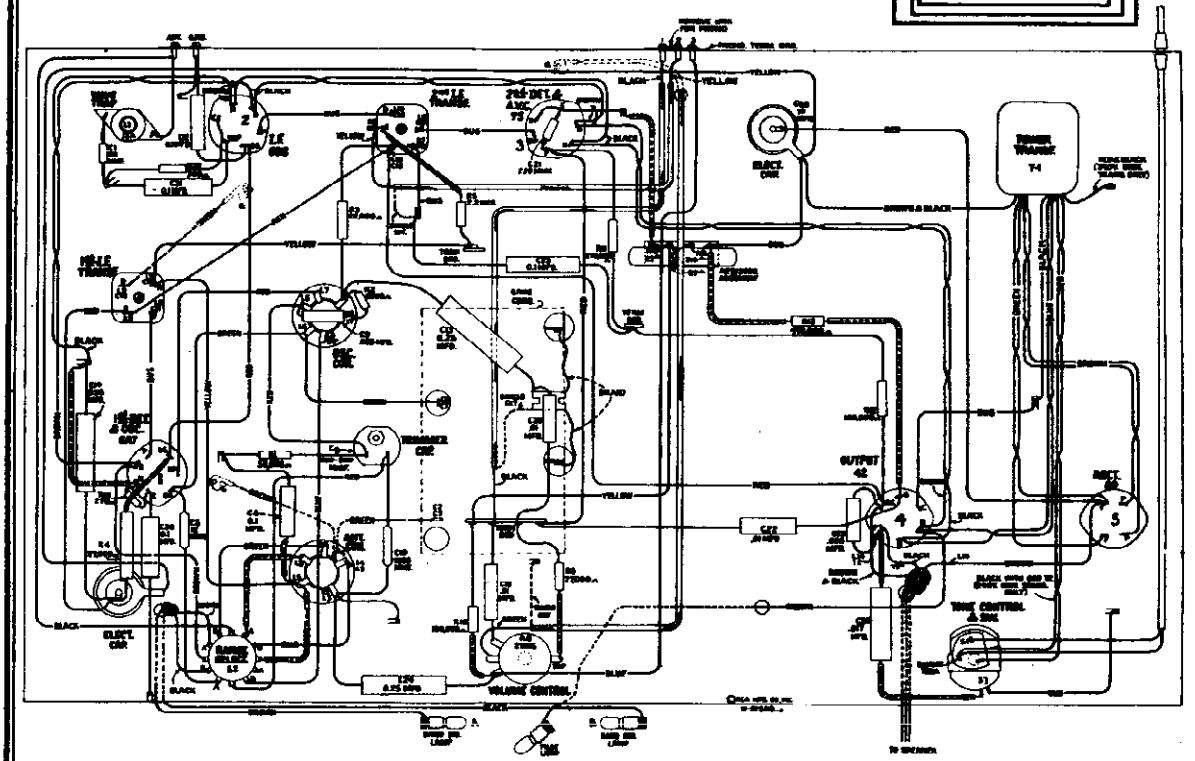

Figure 2—Chassis Wiring Diagram

Primary resistance—10.1 ohms total
Secondary resistance—226 ohms total

Figure 5—Universal Transformer

ALIGNMENT FREQUENCIES
"Standard broadcast" (A)..... 600 kc. (osc.), 1,700 kc. (osc., ant.)
"Short wave" (B)..... None required

FREQUENCY RANGES
"Standard broadcast" (A)..... 540-1,820 kc.
"Short wave" (B)..... 1,820-6,600 kc.

©John F. Rider, Publisher

MODEL 5T
Socket,Trimmers
Voltage,Resistance
Loudspeaker,Pickup

RCA MFG. CO., INC.

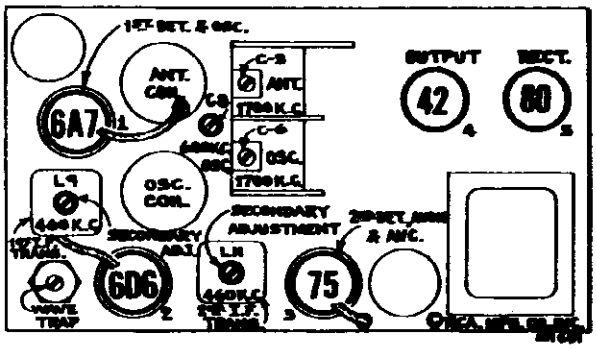

Figure 3—Radiotron, Coil, and Trimmer Locations

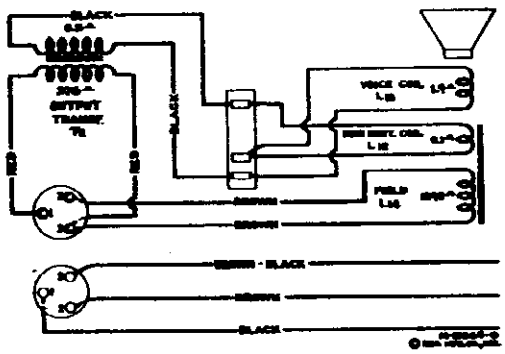

Figure 6—Loudspeaker Wiring

Voice Coil Impedance. 2.2 ohms at 400 cycles

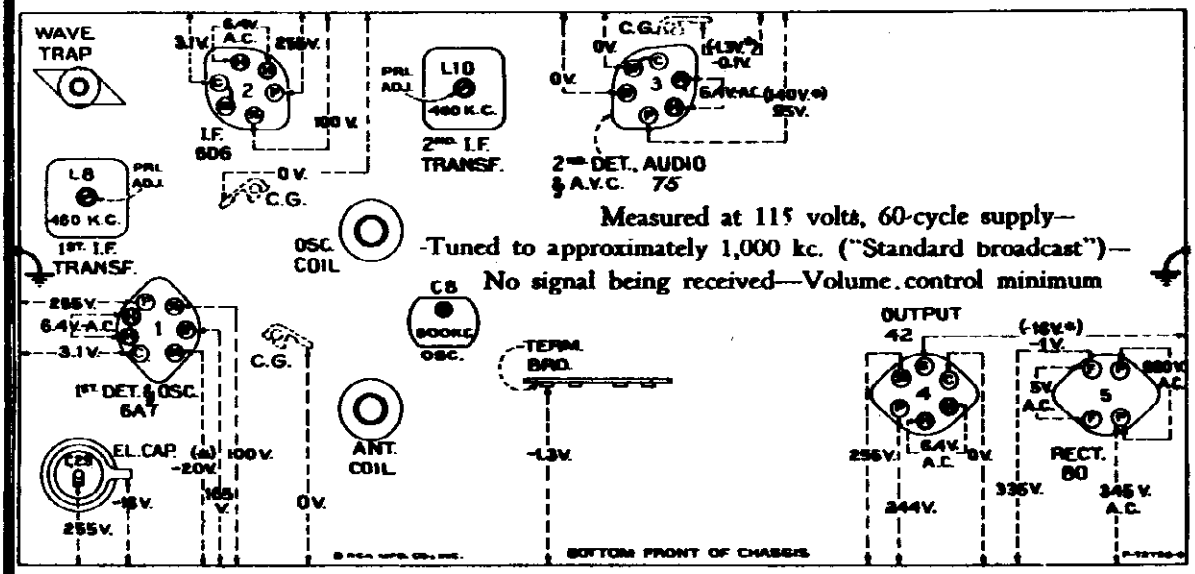

Figure 7—Radiotron Socket Voltages, Coil and Trimmer Locations

Note: Two voltage values are shown for some readings. The higher value shown in parenthesis with asterisk (*) indicates operating conditions without voltmeter loading. The lower value is the actual measured voltage and differs from the higher value because of the additional loading of the voltmeter through the high series circuit resistance.

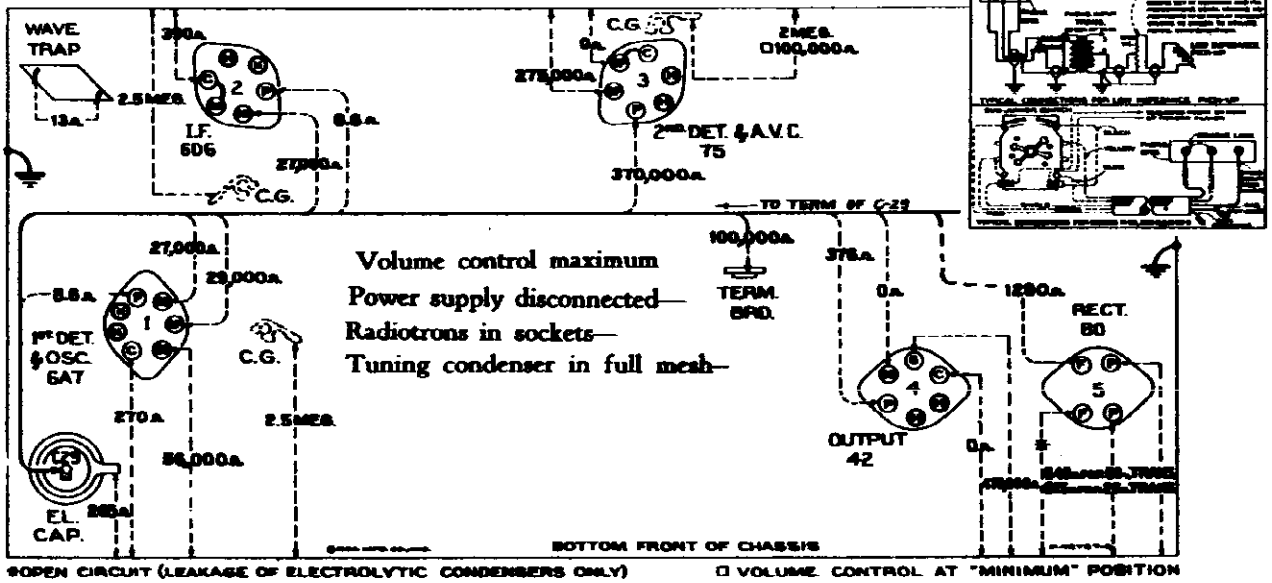

Figure 4—Resistance Diagram

©John F. Rider, Publisher

©John F. Rider, Publisher

General Features

This receiver is of the superheterodyne type and has many distinctive features. Its design includes magnetite core adjusted i-f transformers and wave trap, aural compensated volume control, tone control, resistance coupled audio system, phonograph terminal board, band selective illumination of dial scales, and an 8-inch dust-proof electrodynamic loudspeaker.

Tuning is continuous through the "Standard broadcast" and "Short wave" bands (including 49 meters).

The "Short wave" position of this extensive range also includes channels assigned for police, amateur, and aviation communication. Trimming adjustments are located at accessible points. Their number is reduced to the least that is consistent with efficient operation. The tuning dial ratio of ten to one permits ease of tuning, especially in the "Short wave" band.

Circuit Arrangement

The first detector and oscillator functions are accomplished in a single tube, an RCA-6A7. The input of this tube is coupled to the antenna through a tuned transformer. A shunt (magnetite core adjusted) wave trap is connected across the primary of this transformer to prevent signals of intermediate frequency (460 kc.) from being introduced into the first stage as interference. The two-section gang condenser, which tunes the antenna transformer secondary and the heterodyne oscillator coil, has adjustable trimmers for obtaining exact alignment. Each of these coils is tapped so that the range switch increases the range of tuning by decreasing the amount of inductance.

The intermediate frequency stage is coupled to the RCA-6A7 and to the RCA-75 by means of tuned transformers. These transformers resonate with fixed capacitors and are adjusted by molded magnetite cores to tune to 460 kc.

The modulated signal as obtained from the output of the i-f system is detected by one of the diodes of the RCA-75 tube. Audio frequency secured by this process is passed on to the control grid of this same tube for amplification before final reproduction. The d-c voltage, which results from detection of the signal, is used for automatic volume control. This voltage, which develops across resistor R7, is applied as automatic control grid bias to the first detector and i-f tubes through a suitable resistance filter. Minimum operating bias for the RCA-6A7 and RCA-6D6 tubes is developed across resistors R19 and R20 respectively.

Manual volume control is effected by means of an acoustically tapered potentiometer connected as a variable coupling element between the output of the second detector and the first audio control grid. After amplification by the RCA-75, the audio signal is transmitted by resistance-capacitance coupling to the input of the RCA-42 power output stage, which, in turn, is transformer-coupled to the dynamic speaker. High-frequency tone control is provided by means of a shunt capacitor across the plate circuit of the output tube, which may be cut *in* or out of the circuit with a control switch S3.

The power supply system consists of an RCA-80 rectifier tube which is supplied from an efficiently designed power transformer and which works into a suitable filter. The various potentials required for the plate, screen, control grid, and cathode circuits are obtained from the output of the filter. The electrodynamic loudspeaker field coil is used as a filter reactor.

SERVICE DATA

The various diagrams of this booklet contain such information as will be needed to isolate causes for defective operation if such develops. The ratings of the resistors, capacitors, coils, etc., are indicated adjacent to the symbols signifying these parts on the diagrams. Identification titles, such as R3, L2, C1, etc., are provided for reference between the illustrations and the Replacement Parts List. The coils, reactors, and transformer windings are rated in terms of their d-c resistances only. Ratings of less than one ohm are generally omitted.

Alignment Procedure

There are three alignment trimmers provided in the antenna transformer and oscillator coil tuned circuits. The i-f transformer adjustments are made by means of screws attached to molded magnetite cores. All of these circuits have been accurately adjusted during manufacture and should remain properly aligned unless affected by abnormal conditions or altered during servicing. Loss of sensitivity, improper tone quality, and poor selectivity are the usual indications of improper alignment.

The correct performance of this receiver can only be obtained when the aligning has been done with adequate and reliable apparatus. The manufacturer of this receiver has available, for sale through its distributors and dealers, a complete assortment of such service equipment as may be needed for the alignment operation.

A test oscillator, such as the **RCA Stock No. 9593**, is required as a source of the specified alignment frequencies. Visual indication of receiver output during the adjustment is necessary and should be accomplished by the use of an indicator such as the **RCA Stock No. 4317 Neon Output Indicator.**

The procedure outlined below should be followed in adjusting the various trimmer capacitors and molded cores:

I-F Core Adjustments

The four adjustment screws (attached to molded magnetite cores) of the two i-f transformers (one on top and one on bottom of each i-f transformer) are located as shown by figures 3 and 7. Each circuit must be aligned to a basic frequency of 460 kc. To do this, attach the output indicator across the loudspeaker voice coil or across the output transformer primary.

Connect the output of the test oscillator to the control grid of the RCA-6A7 through a .05 mfd. capacitor. Connect the test oscillator ground terminal to the ground terminal of the receiver chassis. Range selector should be in "Short wave" position. Tune the oscillator to 460 kc. Advance the receiver volume control to its full-on position and adjust the receiver tuning control to a point, within its range, where no interference is encountered either from local broadcast stations or from the heterodyne oscillator. Increase the output of the test oscillator until a slight indication is present on the output indicator. Adjust the two magnetite core screws of the second i-f transformer to produce maximum (peak) indicated receiver output. Then, adjust the two magnetite core screws of the first i-f transformer for maximum (peak) receiver output as shown by the indicating device. During these adjustments, regulate the test oscillator output so that the indication is always as low as possible. By doing so, broadness of tuning due to a.v.c. action will be avoided. It is advisable to repeat the adjustment of all i-f magnetite core screws to assure that the interaction between them has not disturbed the original adjustment.

Wave-Trap Adjustment

Attach the output of the test oscillator to the receiver "Antenna" terminal through a 200 mmfd. (important) capacitor. The ground connections remain connected together. Leave the test oscillator adjusted to 460 kc. and range selector in "Short wave" position as before. Then adjust the wave-trap screw to the point which causes maximum suppression of the 460 kc. signal.

R-F Trimmer Adjustments

Calibrate the tuning dial by setting the pointer to a horizontal position (53 on "Standard broadcast" scale) with the two-gang tuning condenser in full mesh. The output indicator should be left connected to the system. Connections for the test oscillator remain the same as for "Wave-trap adjustment." Adjust the test oscillator to 1,700 kc. and set the receiver tuning control to a dial reading of 1,700 kc. Leave the volume control of the receiver at its maximum position. Make sure that the range selector is at its broadcast position. Regulate the output of the test oscillator until a slight indication is perceptible at the receiver output. Then adjust the two trimmers, C6 and C9, of the oscillator and antenna transformer coils (mounted on the variable condenser) so that each produces maximum (peak) receiver output. After this maximum has been accurately obtained, shift the test oscillator to 600 kc. Tune the receiver to pick up this signal, disregarding the dial reading at which it is best received. Then, adjust the receiver oscillator series trimmer, C8, simultaneously rocking the tuning control backward and forward through the signal until maximum receiver output results from these combined operations. The adjustment at 1,700 kc. should then be repeated to correct for any change which may have been caused by the oscillator series trimmer adjustment.

Phonograph Attachment

A terminal board is provided for connecting a phonograph into the audio amplifying circuit. Typical methods of connecting a low-impedance pick-up, or the RCA Victor Models R-93, R-93-2, and R-93S phonographs are shown on the schematic diagram (figure 1).

Loudspeaker

Centering of the loudspeaker voice coil is made in the usual manner with three narrow paper feelers after first removing the front paper dust cover. This may be removed either permanently by cutting it away with a sharp knife, or by softening its cement with a very light application of acetone using care not to allow the acetone to flow down into the air gap. The dust cover may be cemented back in place with ambroid upon completion of adjustment.

Resistance Measurement

The resistance values shown between Radiotron socket contacts, grid caps, resistors, terminals, and receiver chassis ground, on figure 4, have been carefully selected so as to facilitate a rapid continuity check of the circuits. The use of this diagram in conjunction with the Schematic Circuit Diagram, figure 1, and Chassis Wiring Diagram, figure 2, will permit the location of certain troubles which might otherwise be difficult to ascertain. Each value as specified should hold within ±20%. Variations in excess of this limit will usually be indicative of trouble in circuit under test. Resistance values were measured with the Radiotrons in sockets; tuning condenser in full mesh, and volume control set at maximum except where otherwise noted. In all cases of measuring the resistance between points of the circuit and ground, it will be necessary to connect the negative terminal of the resistance meter to chassis-ground. If the polarity of the resistance meter is not known, it may be readily ascertained by connecting a d-c voltmeter of indicated polarity across the terminals of the device.

Radiotron Socket Voltages

The voltage values indicated from the Radiotron socket contacts, grid caps, resistors, and terminals to receiver chassis ground on figure 7 will assist in locating cause for faulty operation. Each value as specified should hold within ±20% when the receiver is normally operative at its rated line voltage. Variations in excess of this limit will usually be indicative of trouble in the basic circuits. These voltages were measured with receiver tuned to approximately 1,000 kc., no signal being received and volume control set at minimum. To duplicate the conditions under which the voltages were measured requires a 1,000 ohm-per-volt d-c meter, having ranges of 10, 50, 250, and 500 volts. Use the nearest range above the voltage to be measured. A-C voltages were measured with a corresponding a-c meter.

Mechanical Specifications

Height	18½ inches
Width	13½ inches
Depth	7⅞ inches
Weight (Net)	21 pounds
Weight (Shipping)	26 pounds
Chassis Base Dimensions	12 inches x 7 inches x 2½ inches
Over-all Chassis Height	7½ inches
Operating Controls	(1) Power Switch—Tone, (2) Tuning, (3) Volume, (4) Range Selector
Tuning Drive Ratio	10 to 1

RADIOTRON COMPLEMENT

(1) RCA-6A7	First Det.—Oscillator
(2) RCA-6D6	Intermediate Amplifier
(3) RCA-75	Second Det., A-F Amp. and A.V.C.
(4) RCA-42	Audio Power Amplifier
(5) RCA-80	Full-Wave Rectifier

Pilot Lamps (3) ..... Mazda No. 46, 6.3 volts, 0.25 amperes

POWER SUPPLY RATINGS

Rating A	105-125 volts, 50-60 cycles, 80 watts
Rating B	105-125 volts, 25-60 cycles, 80 watts
Rating C	100-110/140-160/195-250 volts, 40-60 cycles, 80 watts

MODELS 5X, 5X3, 5X4
Circuit Data
Alignment, Parts

RCA MFG. CO., INC.

Circuit Arrangement

The conventional superheterodyne type of circuit, consisting of a combined first-detector–oscillator stage, a single i-f stage, a diode-detector-automatic-volume-control stage, an audio voltage amplifier stage, an audio power output stage, and a half-wave rectifier power supply stage, is used.

Tuned Circuits

The antenna coil system consists of two series-connected primary and two series-connected secondary windings to provide the two ranges of tuning. The oscillator coil is similarly wound on a single form.

A range selector switch, consisting of S2, S3, S4, and S5, is used to connect the various sections of these coil systems and to illuminate the proper dial scale for the band in operation. The coils are tuned by a variable two-section gang condenser having trimming capacitors in shunt with each section. A series trimming capacitor is also associated with the "Standard broadcast" oscillator coil.

The intermediate frequency amplifier system consists of an RCA-78 in a transformer coupled circuit. This stage operates at a basic frequency of 460 kc. Adjustable magnetite cores are provided for adjusting inductance of the input i-f transformer (primary and secondary) and the output transformer (primary) windings.

Detector and A. V. C.

The modulated signal, as obtained from the output of the i-f stage is detected by one of the diodes in the RCA-75 tube. The audio frequency component, secured by this process, is transferred from the movable arm of the volume control R6 through coupling capacitor C17 to the control grid of the RCA-75 for voltage amplification. The d-c voltage which results from detection of the signal is used for automatic volume control. This voltage which develops across resistor R6 is applied as automatic control grid bias to the first-detector and i-f tube through a suitable resistance filter circuit.

Audio System

The audio frequency component, mentioned under "Detection and a.v.c.," transferred to the control grid of the RCA-75, is amplified in the tube and then coupled to the control grid of the power output tube RCA-43 through capacitor C20. The output of the power amplifier is transformer coupled into the dynamic loudspeaker.

Rectifier

The plate, grid, cathode and the loudspeaker field voltages required for the operation of this receiver are supplied by the RCA-25Z5 tube operating as a half-wave rectifier

SERVICE DATA

Caution: Certain tests (e. g. alignment and voltage measurement) require operation of receiver with the chassis removed from the cabinet. To permit such operation on models using interlock switch, it will be necessary to hold the interlock switch (see figure 5) closed either by inserting a screwdriver, rod, or pencil through the small interlock hole at rear of chassis, or by temporarily unhooking the interlock tension spring and pushing the interlock bar towards the front of the chassis. Avoid external grounding of receiver or associated equipment since the power supply is connected to the receiver chassis. Carelessness may cause serious damage to equipment. Replace interlock tension spring upon completion of test.

Alignment Procedure

There are three alignment trimmers provided in the antenna coil and oscillator coil tuned circuits. The i-f transformer adjustments are made by means of three screws attached to molded magnetite cores. Re-adjustment may occasionally occur from continued extremes of climate, tampering, purported alteration for services, or after repairs have been made to the r-f or i-f tuned circuits. Improper alignment usually causes the impairment of sensitivity, selectivity, and tone quality. Both conditions will usually exist simultaneously.

In re-adjusting the tuned circuits, it is important to apply a definite procedure and to use adequate and reliable test equipment. A standard test oscillator, such as the RCA Stock No. 9595 will be required as the source of the signal at the specified alignment frequencies. Visual indication of the receiver output during alignment is also necessary to accurately show when the correct point of adjustment is reached. The RCA Stock No. 4317 Neon Output Indicator is especially suitable for this use.

The procedure outlined below should be followed in adjusting the various trimming capacitors and molded magnetite cores.

I-F Core Adjustments

The three adjustment screws (one on top and one on bottom of first i-f transformer and one on bottom of second i-f transformer) are located as shown by figures 2 and 3. Each circuit must be aligned to a basic frequency of 460 kc. To do this attach the output indicator across the loudspeaker voice coil or across the output transformer primary. Connect the output of the test oscillator through a .05 mfd. capacitor to the RCA-6A7 control grid, the ground of the test oscillator being connected to the receiver chassis through a .05 mfd. capacitor. Set the test oscillator to 460 kc. Set the range selector to "Short-wave" position. Advance the receiver volume control to its full-on position and adjust the receiver tuning control to a point within its range where no interference is encountered either from local broadcast stations or heterodyne oscillator. Increase the output of the test oscillator until a slight indication is apparent on the output indicator.

Adjust the bottom core screw of the second i-f transformer to produce maximum (peak) indicated receiver output. Then adjust the two core screws of the first i-f transformer for maximum (peak) receiver output as shown by the indicating device.

During these adjustments regulate the test oscillator output so the indication is always as low as possible. By doing so, broadness of tuning due to a.v.c. action will be avoided. It is advisable to repeat the adjustment of all i-f core screws to assure that the interaction between them has not disturbed the original adjustment.

Wave-Trap Adjustment

Attach the output of the test oscillator to the "Antenna Terminal" (see wave-trap, top view chassis, figure 2) through an 80 mmfd. capacitor, the ground connection of the test oscillator and receiver chassis being connected through capacitor as before. Receiver "Antenna Wire" should be routed up for this and the following r-f adjustments.

Leave the test oscillator adjusted to 460 kc. and range selector in "Short wave" position as before. Then adjust the wave-trap trimmer to the point which causes maximum suppression of the 460 kc. signal.

R-F Trimmer Adjustments

Roughly calibrate the tuning dial by setting the pointer to the bottom horizontal line at the low frequency end of the broadcast scale with the two-gang tuning condenser at its maximum capacity. The output indicator should be left connected to the output system. The connections for the test oscillator remain the same as for "Wave-trap" adjustment. Volume control should be in maximum position. Make sure range selector is set to "Standard broadcast."

Set oscillator and antenna trimming capacitors C11 and C5, respectively, to a position near maximum capacitance (plates near out). Adjust the test oscillator to 1,700 kc.

Tune the receiver to pick up this signal (near 1,700 kc. on dial) for maximum response disregarding dial reading. Always keep test oscillator output as low as is possible and still obtain visual indication. Adjust trimming capacitors C11 and C5 so that each produces maximum (peak) receiver output, re-adjusting receiver tuning slightly if necessary, but using the minimum trimming capacitance possible to obtain peaks. Adjust the dial pointer (without disturbing gang tuning condenser) to a dial reading of 1,700 kc. Shift the test oscillator to 600 kc. Tune the receiver to receive the signal disregarding the dial reading at which it is best received. Then adjust the oscillator series capacitor, C8, simultaneously rocking the tuning control backward and forward through the signal until maximum receiver output results from these combined operations. The adjustment at 1,700 kc. should then be repeated to correct for any change which may have been caused by the oscillator series trimming capacitor adjustment.

Loudspeaker

Centering of the loudspeaker voice coil is made in the usual manner with three narrow paper feelers after first removing the front paper dust cover. This may be removed either permanently by cutting it away with a sharp knife, or by softening its cement with a very light application of acetone using care not to allow the acetone to flow down into the air gap. The dust cover may be cemented back in place with ambroid upon completion of adjustment.

Radiotron Socket Voltages

The voltage values indicated from the Radiotron socket contacts, grid caps, resistors and terminals to receiver chassis ground on figure 5 will assist in locating cause for faulty operation. Each value as specified should hold within ± 20% when the receiver is normally operative at its rated line voltage. Variations in excess of this limit will usually be indicative of trouble in the basic circuits. These voltages were measured with set tuned to approximately 1,000 kc. ("Standard broadcast" range); no signal being received and volume control setting optional. To duplicate the conditions under which the voltages were measured requires a 1,000-ohm-per-volt d-c meter, having ranges of 10, 50 and 250 volts. Use nearest range above voltage to be measured. A-C voltages were measured with a corresponding a-c meter.

REPLACEMENT PARTS

Stock No.	Description	List Price
11409	Band—Tube shield rubber band—Package of 5	$0.10
12118	Cap—Grid contact cap—Package of 5	.15
11465	Capacitor—Adjustable capacitor (C8)	.48
12535	Capacitor .13 Mmfd. (C5)	.18
12405	Capacitor—47 Mmfd. (C15)	.16
12404	Capacitor—120 Mmfd. (C13, C14)	.26
12406	Capacitor—180 Mmfd. (C16)	.26
12537	Capacitor—560 Mmfd. (C1)	.20
12536	Capacitor—820 Mmfd. (C18)	.25
12534	Capacitor—1,170 Mmfd. (C9)	.28
5107	Capacitor—.0025 Mfd. (C2)	.16
4868	Capacitor—.005 Mfd. (C7)	.20
4838	Capacitor—.01 Mfd. (C17, C20, C21)	.25
4836	Capacitor—.05 Mfd. (C4)	.30
4886	Capacitor—.05 Mfd. (C12)	.30
4839	Capacitor—.1 Mfd. (C22)	.28
4835	Capacitor—.1 Mfd. (C19)	.28
4840	Capacitor—.25 Mfd. (C25)	.30
12396	Capacitor Pack—Comprising two 16 Mfd. and one 10 Mfd. section (C23, C24, C26)	2.72
4358	Clamp—Mounting clamp for capacitor Stock No. 12398	.15
12495	Coil—Antenna coil (L2, L3, L4, L5)	1.30
12496	Coil—Oscillator coil (L6, L7, L8)	.80
13128	Cord—Power cord (130 ohm resistor R14) (Models without interlock switch only)	1.00
12006	Core—Adjustable core for Stock Nos. 12403, 12407 and 12497	.22
4340	Lamp—Dial lamp—Package of 5	.60
12409	Lead—Antenna lead, approximately 20 feet long	.25
12397	Reactor—Filter reactor (L16)	1.14
12433	Resistor—27 ohm—insulated, ¼ watt (R11)—Package of 5	1.00
12415	Resistor—39 ohm—insulated, ¼ watt (R12)—Package of 5	1.00
12414	Resistor—560 ohm—insulated, ¼ watt (R13)—Package of 5	1.00
12265	Resistor—6,800 ohm—insulated, ¼ watt (R4)—Package of 5	1.00
12410	Resistor—15,000 ohm—insulated, ¼ watt (R2)—Package of 5	1.00
12412	Resistor—47,000 ohm—insulated, ¼ watt (R5)—Package of 5	1.00
12286	Resistor—56,000 ohm—insulated, ¼ watt (R1)—Package of 5	1.00
12263	Resistor—100,000 ohm—insulated, ¼ watt (R8)—Package of 5	1.00
12285	Resistor—470,000 ohm—insulated, ¼ watt (R9)—Package of 5	1.00
12413	Resistor—680,000 ohm—insulated, ¼ watt (R10)—Package of 5	1.00
12411	Resistor—2.2 megohm—insulated, ¼ watt (R3, R7)—Package of 5	1.00
12399	Resistor—Comprising one 130 ohm and one 42 ohm sections (R14, R15) (Models with interlock switch only)	1.40
12845	Resistor—40 ohm—wire wound (R15) (Models without interlock switch only)	.40
4786	Socket—6-contact 78, 75, 43 or 25Z5 Radiotron socket	.15
4787	Socket—7-contact 6A7 Radiotron socket	.15
12400	Socket—Dial lamp socket	.22
13008	Shield—First I.F. transformer shield	.28
12607	Shield—First I.F. transformer shield top	.30
12408	Shield—Second I.F. transformer shield	.28
12396	Shield—75 or 78 Radiotron shield	.25
3404	Spring—Power switch spring—Package of 10	.50
12007	Spring—Retaining spring for cone Stock No. 12006—Package of 10	.26
12402	Switch—Interlocking switch and cover	1.74
12395	Switch—Range switch (S2, S3, S4, S5)	.68
12403	Transformer—First intermediate frequency transformer, complete with shield (L8, L10, C13, C14)	1.62
12407	Transformer—Second intermediate frequency transformer, complete with shield (L11, L12, C15, C16)	1.45
12497	Trap—Wave trap (L1)	.70
12394	Volume Control—Volume control and power switch (R6, S1)	1.06
	REPRODUCER ASSEMBLIES (M80864-1)	
12499	Coil—Reproducer field coil (L15)	1.80
12731	Coil—Reproducer neutralizing coil (L13)	.23
12498	Cone—Reproducer cone, complete (L14)	1.20
9684	Reproducer—Speaker, complete	5.16
12500	Transformer—Output transformer (T1)	1.68
	REPRODUCER ASSEMBLIES (M80864-2)	
13149	Coil—Reproducer field coil (L15)	1.60
13150	Coil—Reproducer neutralizing coil (L13)	.23
13148	Cone—Reproducer cone, complete (L14)	1.25
9750	Reproducer—Speaker, complete	5.50
13151	Transformer—Output transformer (T1)	1.60
	DRIVE ASSEMBLIES	
12401	Condenser—2-gang variable tuning condenser (C3, C5, C10, C11)	2.35
12420	Cord—Variable tuning condenser drive cord—Package of 5	.20
12608	Dial—Dial scale—Used on Models 5X and 5X3 only	.45
13071	Dial—Dial scale—Used on Model 5X4 only	.45
12419	Indicator—Station selector indicator pointer	.15
12416	Pulley—Indicator pointer drive pulley and shaft	.34
12417	Pulley—Variable tuning condenser shaft pulley, with set screws	.24
12418	Screw—8-32x3/16 in. milled head, cupped point set screw for condenser drive pulley Stock No. 12417—Package of 10	.18
12422	Shaft—Variable tuning condenser drive (knob) shaft	.26
12421	Spring—Variable tuning condenser drive cord tension spring—Package of 10	.60
	MISCELLANEOUS ASSEMBLIES	
12548	Crystal—Station selector crystal and bezel—Used on Models 5X and 5X3 only	1.06
12936	Crystal—Station selector crystal and bezel—Used on Model 5X4 only	.90
12673	Knob—Station selector, volume control or range switch knob—Package of 5—Used on Models 5X and 5X3 only	.58
12937	Knob—Station selector, volume control or range switch knob—Package of 5—Used on Model 5X4 only	.65
4119	Screw—Set screw for knob Stock No. 12673 and 12937—Package of 30	.38

The prices quoted above are subject to change without notice.

©John F. Rider, Publisher

For Alignment and Parts List, see Index

RCA MFG. CO., INC.

MODELS 5X, 5X3, 5X4
Schematic
Chassis Wiring

Figure 1—Schematic Circuit Diagram

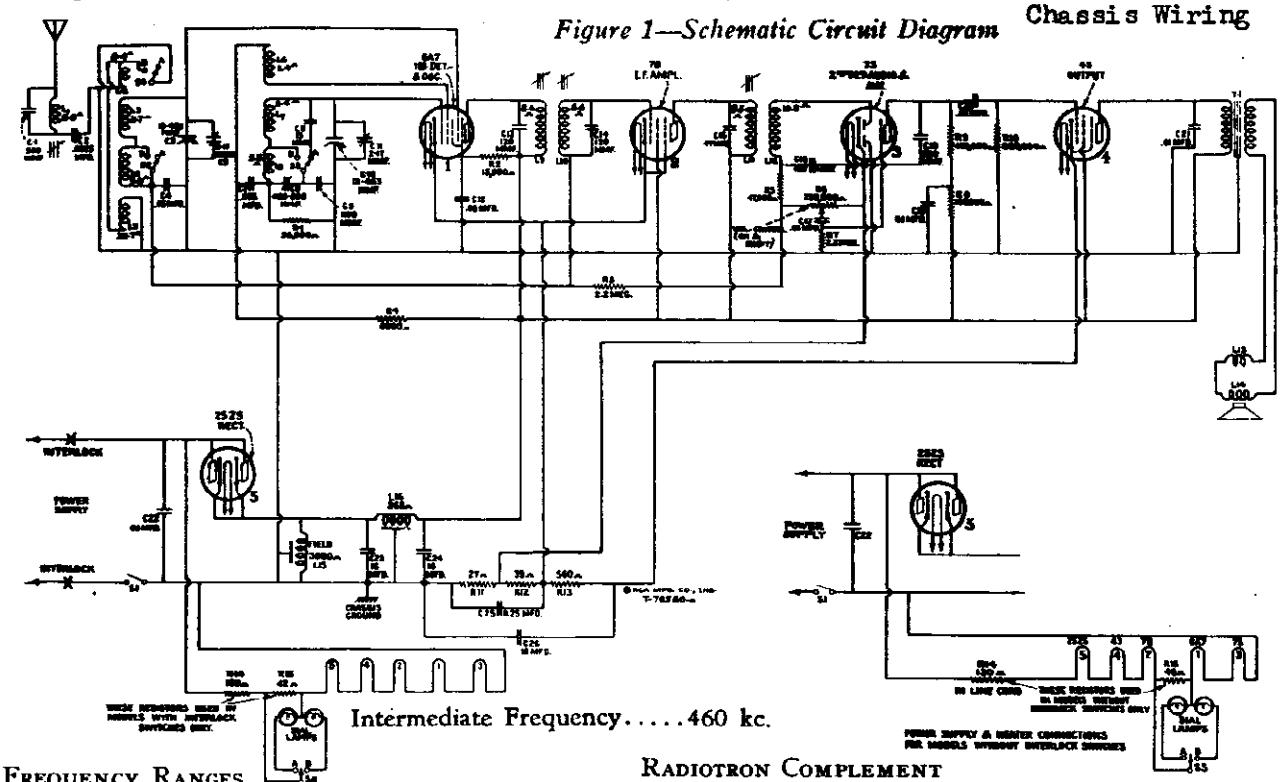

Intermediate Frequency.....460 kc.

FREQUENCY RANGES

"Standard Broadcast" (A)..... 540-1,800 kc.
"Short Wave" (B).....1,800-6,500 kc.

ALIGNMENT FREQUENCIES

"Standard Broadcast" (A)
600 kc. (osc.); 1,700 kc. (osc. and ant.)
"Short Wave" (B).....None required

POWER OUTPUT

Undistorted.....0.4 watts AC, 0.3 watts DC
Maximum.....0.9 watts AC, 0.8 watts DC

RADIOTRON COMPLEMENT

(1) RCA-6A7.....First Detector–Oscillator
(2) RCA-78.....Intermediate Amplifier
(3) RCA-75.....Second Detector, A-F, and A.V.C.
(4) RCA-43.....Power Output
(5) RCA-25Z5.....Rectifier

LOUDSPEAKER

Type.....Electrodynamic
Impedance (v.c.) {M80864-1, 4.5 ohms / M80864-2, 3.0 ohms} at 400 cycles

Power Supply Rating (105-125 volts).....50-60 cycles—60 watts, D-C—50 watts

Pilot Lamps (2).....Mazda No. 40, 6.3 volts, 0.15 amperes

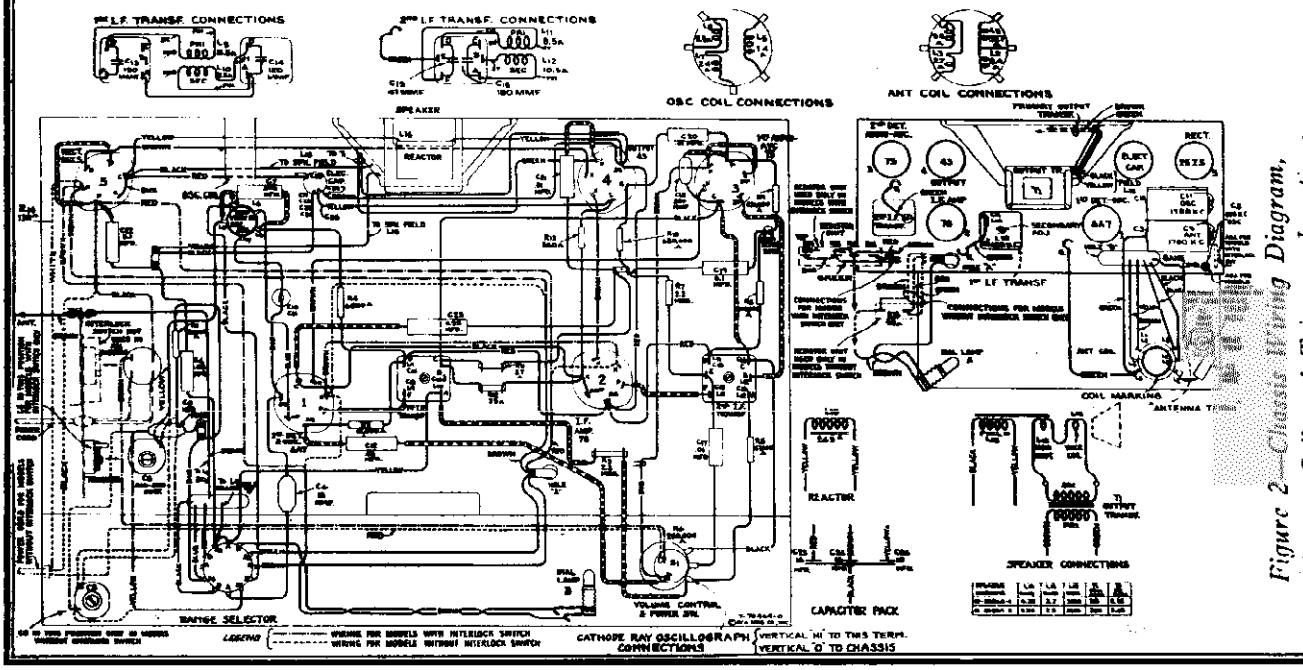

Figure 2—Chassis Wiring Diagram, Radiotron, Coil, and Trimmer Locations

©John F. Rider, Publisher

MODELS 5X, 5X3, 5X4
Socket, Trimmers
Voltage, Resistance
Drive Mechanism

RCA MFG. CO., INC.

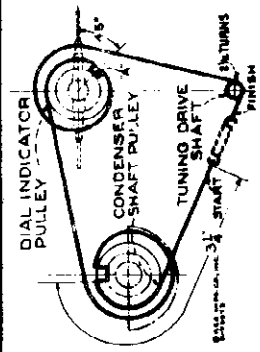

Figure 3—Tuning Drive Cord Mechanism

Rear view of drive assembly showing threading of drive cord with variable condenser plates in full mesh. To perform this operation, unsolder the four leads (connected between antenna coil and range selector switch) from the range selector switch, unsolder antenna lead-in wire from wave-trap terminal, unsolder lead from rear section of gang tuning condenser, and remove the four screws which secure the tuning drive frame to the chassis proper. This frame with gang tuning condenser still attached may now be easily removed for the threading operation. The relative position of the parts and method of threading are shown on the above diagram. In case the cord is too long for proper tension, it may be effectively shortened by first releasing finish end of cord, inserting a match or other shim under the cord at point "A" and then re-hooking the end of the cord to the tension spring. Replace drive assembly and re-solder leads.

Resistance Measurements

The resistance values shown between Radiotron socket contacts, grid caps, resistors, terminals, and receiver chassis ground, on figure 4 have been carefully selected so as to facilitate a rapid check of the circuit for defective parts, bad joints, etc. The use of this diagram in conjunction with the Schematic Circuit Diagram, figure 1, and the Chassis Wiring Diagram, figure 2, will permit the location of certain troubles which would otherwise be difficult to ascertain. Each value as specified should hold within ± 20%. Variations in excess of this limit will usually be indicative of trouble in the basic circuits. Resistance values were measured with the Radiotrons in sockets, power supply disconnected, tuning condenser in full mesh, and volume control set at maximum except where otherwise noted. In all cases of measuring the resistance between points of the circuit and ground, it will be necessary to connect the negative (−) terminal of the resistance meter to the chassis ground. If the polarity of the resistance meter is not known, it may be readily ascertained by connecting a d-c voltmeter of indicated polarity across the terminals of the device.

Mechanical Specifications

Operating Controls

(1) Power Switch–Volume,

(2) Tuning,

(3) Range Selector

Cabinet Dimensions	Model 5X	Model 5X3	Model 5X4
Height	9⅞ inches	9⅝ inches	7⅝ inches
Width	12 5/16 inches	10⅜ inches	10⅜ inches
Depth	6 inches	6 inches	6 inches
Weights			
Net	11 pounds	10½ pounds	9¾ pounds
Shipping	13½ pounds	13½ pounds	12¾ pounds

Figure 5—Radiotron Socket Voltages and Trimmer Locations

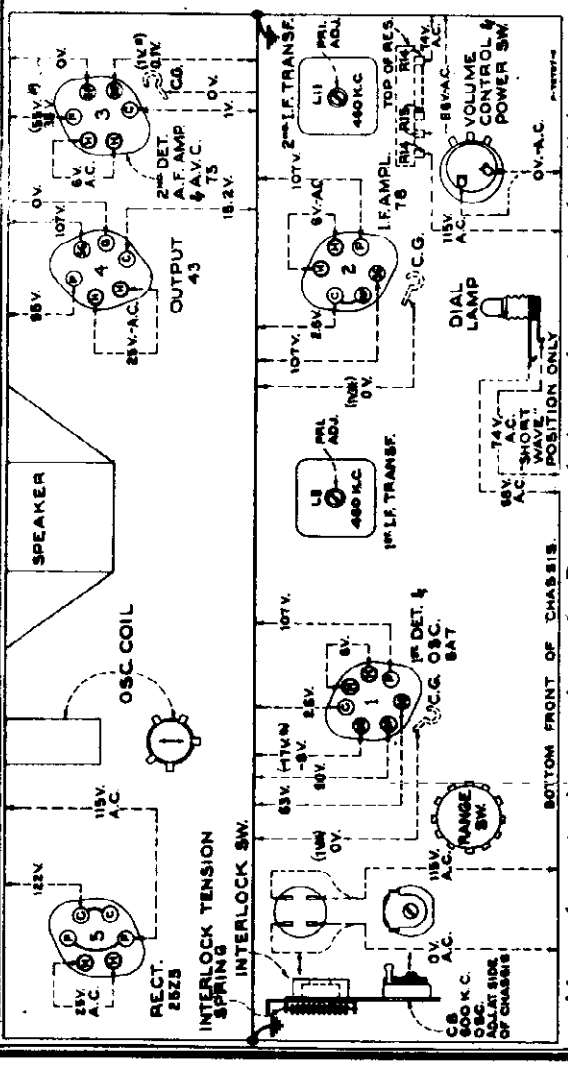

Figure 4—Resistance Diagram

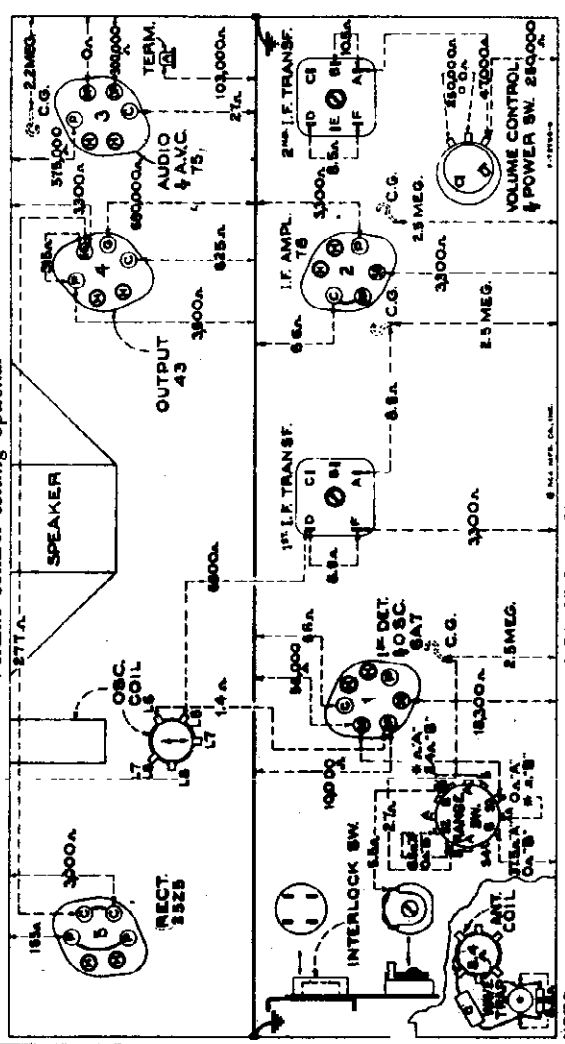

©John F. Rider, Publisher

RCA MFG. CO., INC.

MODEL 5X2
Schematic
Chassis Wiring
Socket, Trimmers
Loudspeaker

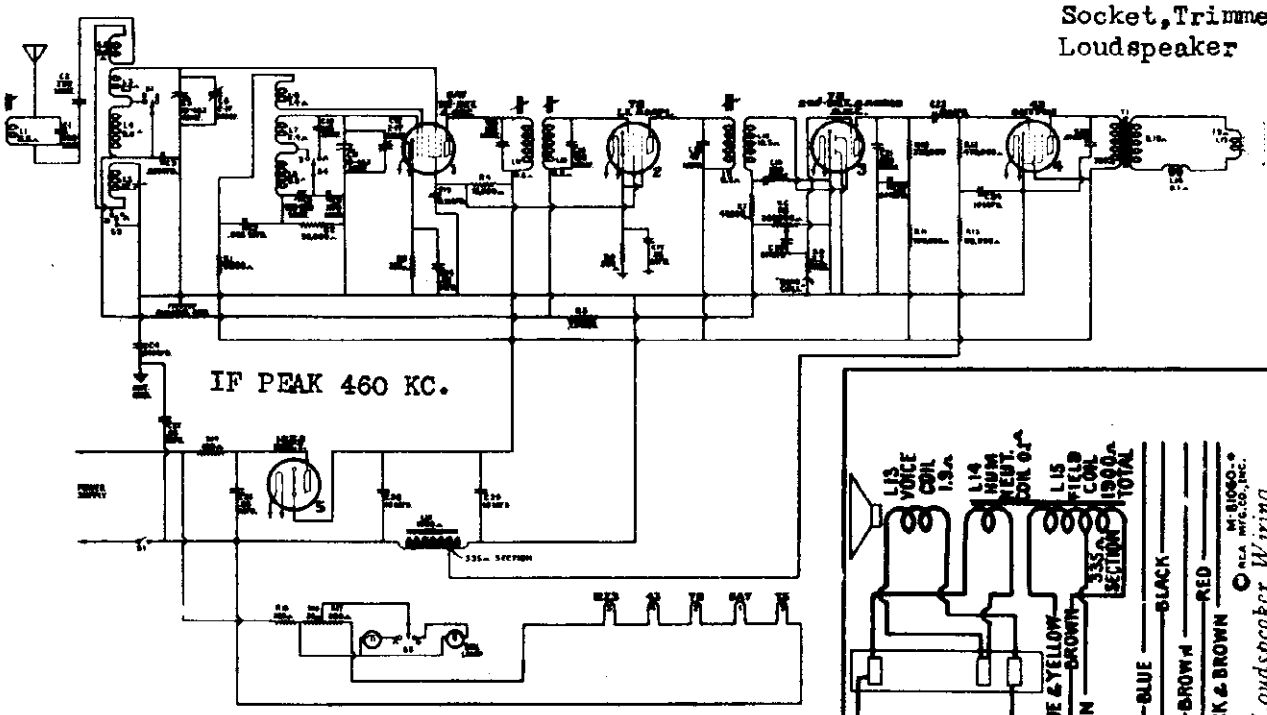

Figure 1—Schematic Circuit Diagram

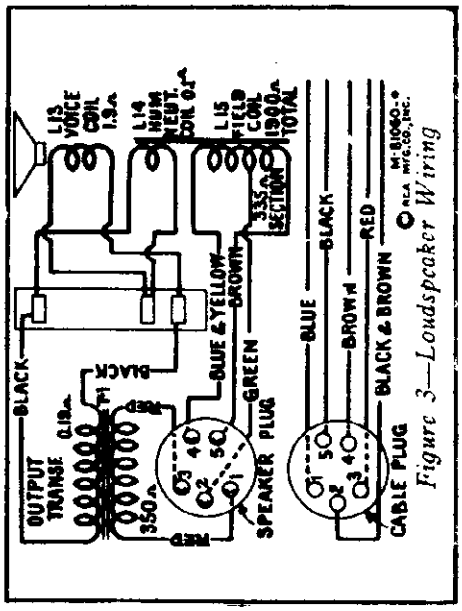

Figure 3—Loudspeaker Wiring

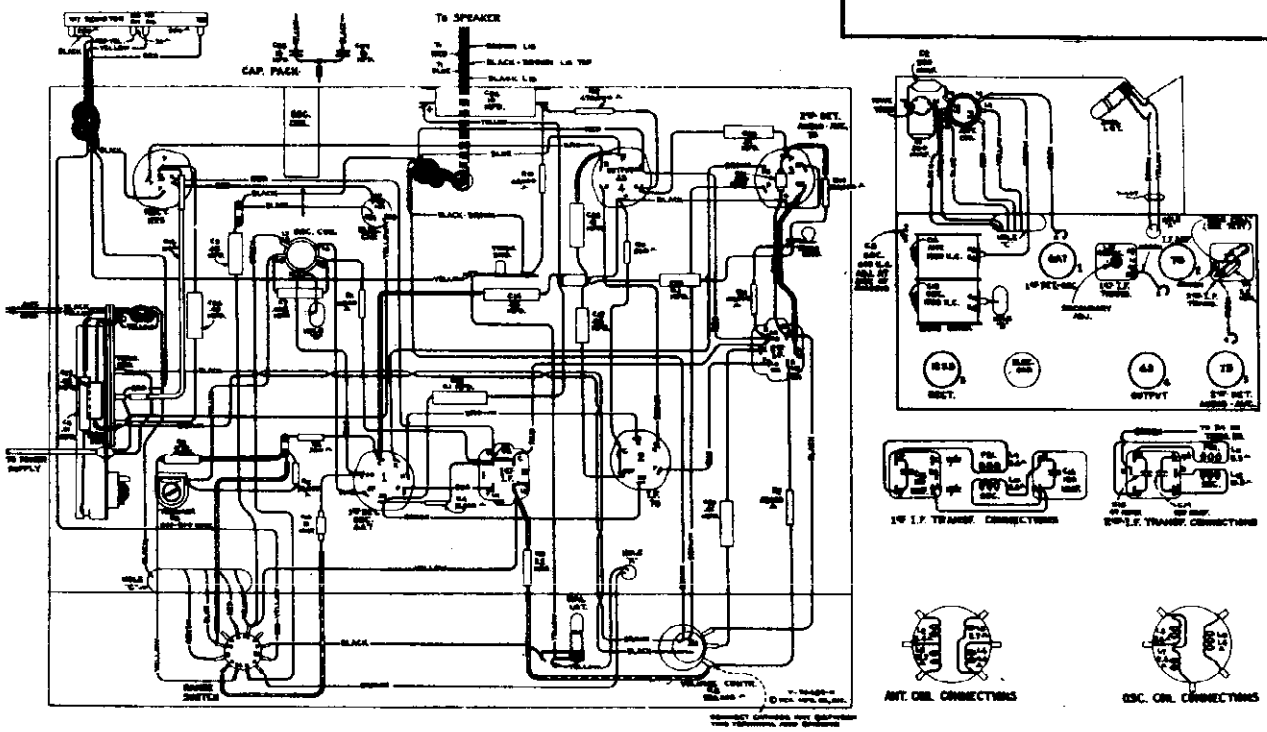

Figure 2—Chassis Wiring Diagram, Radiotron, Coil, and Trimmer Locations

MODEL 5X2
Voltage, Resistance

RCA MFG. CO., INC.

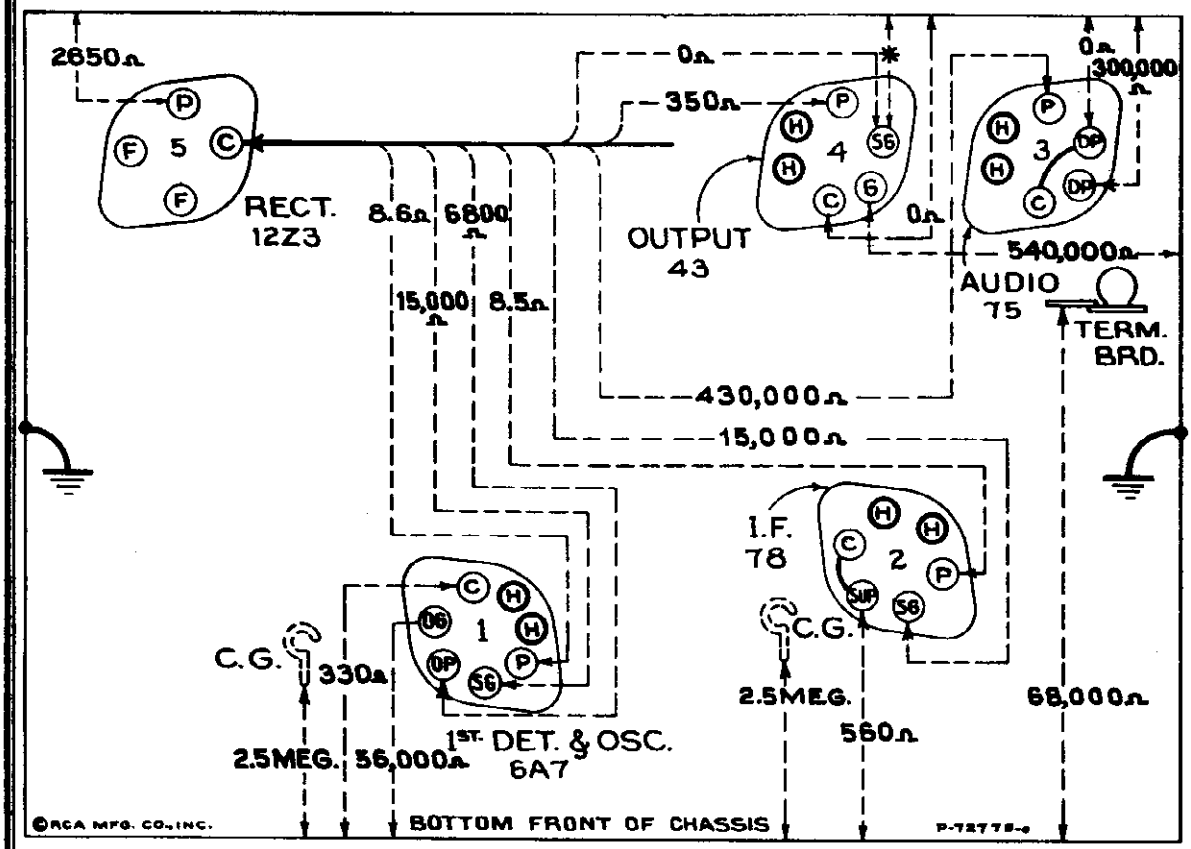

CAUTION: REMOVE BIAS CELL BEFORE MAKING RESISTANCE MEASUREMENTS.
NOTE: * OPEN CIRCUIT (LEAKAGE ELECTROLYTIC CAPACITORS ONLY).

Figure 5—Resistance Diagram
Power supply disconnected—Tuning condenser in full mesh—Volume control at maximum Radiotrons in sockets

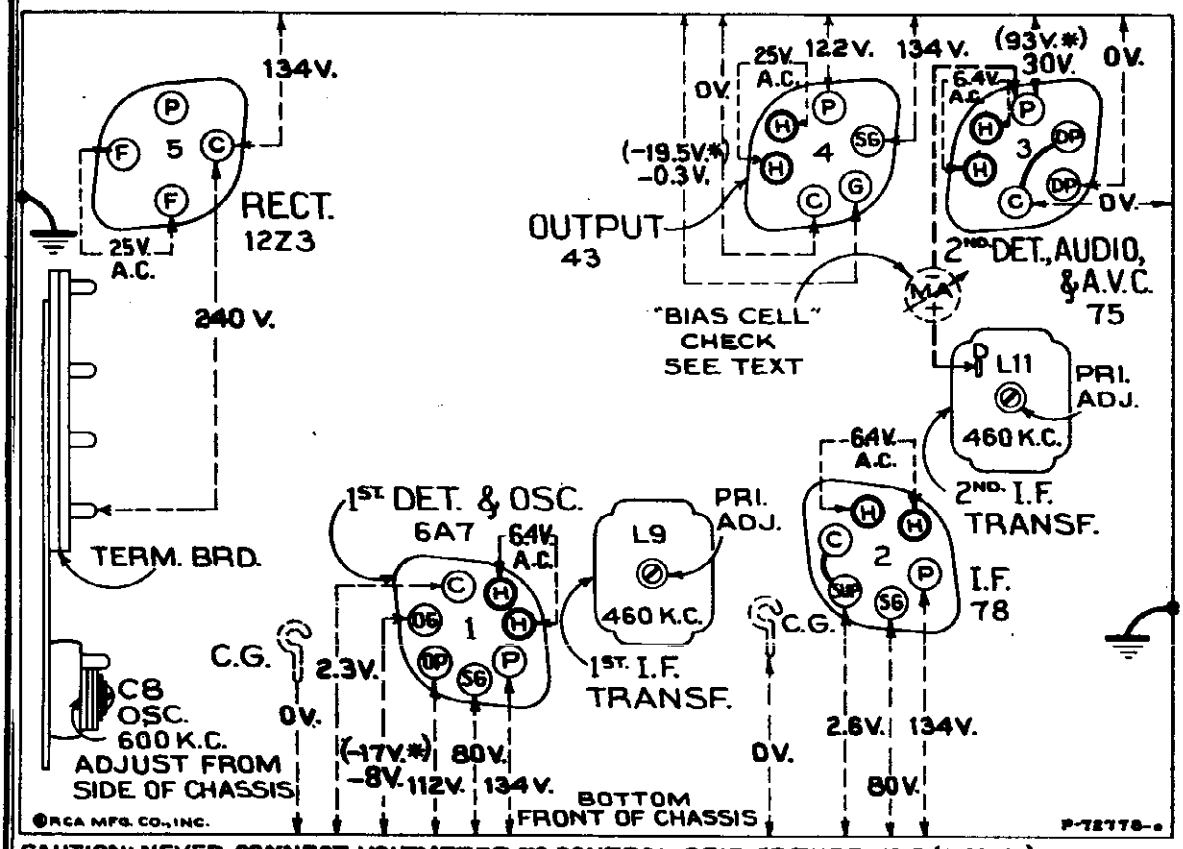

CAUTION: NEVER CONNECT VOLTMETER TO CONTROL GRID OF TUBE No. 3 (RCA-75)-SEE TEXT.

Figure 6—Radiotron Socket Voltages and Trimmer Locations
Measured at 230 volts, 60 cycle supply—For 230 volt D-C approximately 10% lower Tuned to approximately 1,000 kc. ("Standard broadcast" position) —No signal being received— Volume control setting optional

©John F. Rider, Publisher

©John F. Rider, Publisher

RCA MFG. CO., INC.

MODEL 5X2

Circuit Data, Alignment, Parts, Drive Mechanism

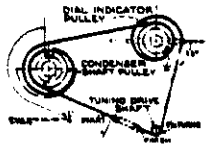

Figure 6—Tuning Drive Cord Mechanism

Rear view of dial assembly showing threading of drive cord with variable condenser plates in mid mesh. To perform this operation, remember the four leads connected between antenna coil and range selector switch; from the range selector switch, another antenna lead; from rear section of gang tuning condenser; and remove the four screws which secure the tuning drive frame to the chassis proper. This frame with gang tuning condenser and attached parts may now be easily removed for the threading operation. The relative position of the parts and method of threading are shown in the above diagram. To make the cord is not long for proper tension, it may be effectively shortened by first releasing knots and cut cord, inserting a match or other thin wider the cord at point "A" and then reknotting the end of the cord as the manner shown. Replace drive assembly and re-solder leads.

Circuit Arrangement

Tuned Circuits

The antenna coil system consists of two series-connected primary and two series-connected secondary windings to provide the two ranges of tuning. The oscillator coil is similarly wound on a single form. A multi-pole range selector switch, consisting of S2, S3, S4, and S5, is used to connect the various sections of these coil systems and to illuminate the proper tuning dial scale for the band in operation. The coils are tuned by a variable two-section gang condenser having trimming capacitors in shunt with each section. A series trimming capacitor is also associated with the "Standard broadcast" oscillator coil.

The intermediate frequency amplifier system consists of an RCA-78 in a transformer coupled circuit. This stage operates at a basic frequency of 460 kc. Adjustable magnetite cores are provided for adjusting inductance of the input i-f transformer (primary and secondary) and the output transformer (primary) windings.

Detector and A.V.C.

The modulated signal, as obtained from the output of the i-f stage, is detected by one of the diodes in the RCA-75 tube. The audio frequency component, secured by this process, is transferred from the movable arm of the volume control R8 through coupling capacitor C30 to the control grid of the RCA-75 for voltage amplification. The d-c voltage which results from detection of the signal is used for automatic volume control. This voltage which develops across resistor R8 is applied as automatic control grid bias to the first-detector and i-f tube through a suitable resistance filter circuit.

Audio System

The audio frequency component, mentioned under "Detection and A.V.C.," transferred to the control grid of the RCA-75, is amplified in the tube and then coupled to the control grid of the power output tube RCA-43 through capacitor C23. The output of the power amplifier is transformer coupled into the dynamic loudspeaker. A single "Bias Cell," see figures 1 and 2, is used for supplying bias voltage to the control grid of the RCA-75 tube.

Rectifier

The plate, grid, cathode, and loudspeaker field voltages required for the operation of this receiver are supplied by the RCA-12Z3 tube operating as a half-wave rectifier.

SERVICE DATA

CAUTION: Certain tests (e.g. alignment and voltage measurement) require operation of receiver with chassis removed from cabinet. Avoid external grounding of receiver chassis or associated equipment since the power supply is now connected to receiver chassis through the speaker field. Carelessness may cause serious damage to equipment.

Alignment Procedure

There are three alignment trimmers provided in the antenna coil and oscillator coil tuned circuits. The i-f transformer adjustments are made by means of three screws attached to molded magnetite cores.

Improper alignment usually causes the impairment of sensitivity, selectivity, and tone quality. Such conditions will usually exist simultaneously.

In re-adjusting the tuned circuits, it is important to apply a definite procedure and to use adequate and reliable test equipment. A standard test oscillator, such as the RCA Stock No. 9395 will be required as the source of the signal at the specified alignment frequencies. Visual indication of the receiver output during alignment is also necessary to accurately show when the correct point of adjustment is reached. The RCA Stock No. 4317 Neon Output Indicator is especially suitable for this use.

The procedure outlined below should be followed in adjusting the various trimming capacitors and molded magnetite cores.

I-F Core Adjustments

The three adjustment screws (one on top and one on bottom of first i-f transformer and one on bottom of second i-f transformer) are located as shown by figures 2 and 6. Each circuit must be aligned to a basic frequency of 460 kc. To do this attach the output indicator across the loudspeaker voice coil or across the output transformer primary. Connect the output of the test oscillator through a .05 mfd. capacitor to the RCA-6A7 control grid, the ground of the test oscillator being connected to the receiver external yellow ground lead. Set the test oscillator to 460 kc. Place the range selector in "Short wave" position. Advance the receiver volume control to its full-on position and adjust the receiver tuning control to a point within its range where no interference is encountered either from local broadcast stations or heterodyne oscillator. Increase the output of the test oscillator until a slight indication is apparent on the output indicator.

Adjust the bottom magnetite core screw of the second i-f transformer to produce maximum (peak) indicated receiver output. Then adjust the two magnetite core screws of the first i-f transformer for maximum (peak) receiver output as shown by the indicating device.

During these adjustments regulate the test oscillator output so the indication is always as low as possible. By doing so, broadness of tuning due to A.V.C. action will be avoided. It is advisable to repeat the adjustment of all i-f magnetite core screws to assure that the interaction between them has not disturbed the original adjustment.

Wave-Trap Adjustment

Attach the output of the test oscillator to the black antenna lead through a 200 mmfd. capacitor, the ground connection of the test oscillator and receiver being connected as before.

Leave the test oscillator adjusted to 460 kc., and range selector in "Short wave" position as before. Then adjust the wave-trap trimmer to the point which causes maximum suppression of the 460 kc. signal.

R-F Trimmer Adjustments

Roughly calibrate the tuning dial by setting the pointer to the bottom horizontal line at the low frequency end of the broadcast scale with the two-gang tuning condenser at its maximum capacity. The output indicator should be left connected to the output system. The connections for the test oscillator remain the same as for "Wave-trap" adjustment. Volume control should be in maximum position.

Set range selector to "Standard broadcast" position.

Set oscillator and antenna trimming capacitors C12 and C6, respectively, to a position near minimum capacitance (plates near out). Adjust the test oscillator to 1,700 kc.

Tune the receiver to pick up this signal (near 1,700 kc. on dial) for maximum response disregarding dial reading. Always keep test oscillator output as low as is possible and still obtain visual indication. Adjust trimming capacitors C12 and C6 so that each produces maximum (peak) receiver output, re-adjusting receiver tuning slightly if necessary, but using the minimum trimming capacitance possible to obtain peaks. Adjust the dial pointer (without disturbing gang tuning condenser) to a dial reading of 1,700 kc. Shift the test oscillator to 600 kc. Tune the receiver to receive the signal disregarding the dial reading at which it is best received. Then adjust the oscillator series capacitor, C8, simultaneously rocking the tuning control backward and forward through the signal until maximum receiver output results from these combined operations. The adjustment at 1,700 kc. should then be repeated to correct for any change which may have been caused by the oscillator series trimming capacitor adjustment.

Loudspeaker

Centering of the loudspeaker voice coil is made in the usual manner with three narrow paper feelers after first removing the front paper dust cover. This may be removed either permanently by cutting it away with a sharp knife, or by softening its cement with a very light application of acetone using care not to allow the acetone to flow down into the air gap. The dust cover may be cemented back in place with ambroid upon completion of adjustment.

Radiotron Socket Voltages

Note: *Two voltage values are shown for some readings. The higher value shown in parenthesis with asterisk (*) indicates operating conditions without voltmeter loading. The lower value is the actual measured voltage and differs from the higher value because of the additional loading of the voltmeter through the high series circuit resistance.*

CAUTION: The voltage between the RCA-75 control grid and ground should never be measured. An ordinary voltmeter will paralyze the "Bias Cell," see figures 1 and 2, in this circuit for a period of approximately one to two hours. To check "Bias Cell," connect 0-1 M.A. milliammeter as shown in figure 2. A reading of 0.8 M.A. should give a steady reading on the meter between 0.3 and 0.6 M.A. when used with a good RCA-75 tube.

The voltage values indicated from the Radiotron socket contacts, grid caps, resistors and terminals to receiver chassis ground, see figure 6, will assist in locating cause for faulty operation. Each value as specified should hold within ± 10% when the receiver is normally operative at its rated voltage. Appreciable excess of this limit will usually be indicative of trouble in the associated circuit. These voltages were measured with set tuned to approximately 1,000 kc. ("Standard broadcast" range); no signal being received and volume control setting minimum. The equipment and conditions under which the voltages were measured consisted of a 1,000 ohm per volt meter, using ranges of 10, 50 and 250 volts. Voltages between 0 and 10 read on 10-volt scale, between 10 and 50 on 50-volt scale, and between 50 and 250 on 250-volt scale. A-C voltages were measured with a corresponding A-C meter.

CAUTION: The "Bias Cell," see figures 1 and 2, should be carefully mounted before any resistance measurements are made. Do not allow the spring contact clips to short-circuit "Bias Cell" during its removal or insertion.

The resistance values shown between Radiotron socket contacts, grid caps, resistors, and receiver chassis ground, see figure 7, have been carefully selected so as to facilitate a rapid check of the circuit for defective parts, bad joints, etc. The use of this diagram in conjunction with the Schematic Circuit Diagram, figure 1, and the Chassis Wiring Diagram, figure 3, will permit the location of certain troubles which would otherwise be difficult to ascertain. Each value as specified should hold within ± 10%. Variations in excess of this limit will usually be indicative of trouble in the associated circuits. Resistance values were measured with the Radiotron in sockets; power supply disconnected; tuning condenser in full mesh, and volume control set at maximum except where otherwise noted. In all cases of measuring the resistance between points of the circuit and ground, it will be necessary to connect the negative (-) terminal of the resistance meter to the chassis ground. If the polarity of the resistance meter is not known, it may be readily ascertained by connecting a d-c voltmeter of indicated polarity across the terminals of the device.

REPLACEMENT PARTS

Insist on genuine factory tested parts, which are readily identified and may be purchased from authorized dealers.

Stock No.	Description	List Price
	RECEIVER ASSEMBLIES	
11409	Band—Rubber band for 8mm I.F. Transformer—Package of 5	.10
12118	Cap—Grid contact cap—Package of 5	.15
11978	Capacitor—Adjustable capacitor (C28)	.30
12585	Capacitor—15 Mmfd. (C16)	.18
12403	Capacitor—47 Mmfd. (C18)	.26
12404	Capacitor—150 Mmfd. (C15, C16)	.26
12406	Capacitor—140 Mmfd. (C19)	.26
12694	Capacitor—255 Mmfd. (C2)	.12
12317	Capacitor—340 Mmfd. (C1)	.10
12536	Capacitor—350 Mmfd. (C21)	.23
12594	Capacitor—1.175 Mmfd. (C9)	.28
4868	Capacitor—.005 Mfd. (C7)	.20
4858	Capacitor—.01 Mfd. (C4, C20, C23, C25)	.25
4836	Capacitor—.05 Mfd. (C3, C14, C17)	.30
12078	Capacitor—.05 Mfd. (C26, C27)	.30
4841	Capacitor—.1 Mfd. (C13, C22)	.22
12681	Capacitor—.8 Mfd. (C24)	.70
12677	Capacitor—3 Sections each 16 Mfd. (C28, C29)	3.13
12681	Coil—Bias coil for Stock No. 12676	.50
12495	Coil—Antenna coil (L1, L3, L4, L5)	1.50
12680	Coil—Coil windings and form only for second I.F. transformer Stock No. 12676 (L7, L8)	.60
12496	Coil—Oscillator coil (L6, L9, L8)	.80
12006	Core—Adjustable core for Stock No. 12403, 12497 and 12676	.22
4340	Lamp—Dial lamp—6.3 volt—Package of 5	.60
12409	Lead—Antenna lead—approximately 20 feet long	.15
12395	Range Switch—(S2, S3, S4, S5)	.68
12697	Resistance—100 ohms, flexible type (R14)—Package of 5	.65
12481	Resistance—150 ohms, insulated, ½ watt, (R6)—Package of 5	1.00
11414	Resistance—360 ohms, insulated ½ watt, (R15)—Package of 5	1.00
11345	Resistance—4,000 ohms, insulated, ½ watt, (R1)—Package of 5	1.00
12695	Resistance—15,000 ohms, insulated, ½ watt, (R4)—Package of 5	1.00
12412	Resistance—25,000 ohms, insulated, ½ watt, (R7)—Package of 5	1.00
11286	Resistance—50,000 ohms, insulated, ½ watt, (R2)—Package of 5	1.00
11696	Resistance—68,000 ohms, insulated, ½ watt, (R13)—Package of 5	1.00
11263	Resistance—100,000 ohms, insulated, ½ watt, (R11)—Package of 5	1.00
12452	Resistance—250,000 ohms, insulated, ½ watt, (R10)—Package of 5	1.00
11285	Resistance—750,000 ohms, insulated, ½ watt, (R12)—Package of 5	1.00
11679	Resistance—2.5 Megohm, insulated, ½ watt, (R5, R9)—Package of 5	1.00
12008	Shield—First I.F. transformer shield	.28
12601	Shield—First I.F. transformer shield top	.30
12318	Shield—Radiotron socket	.15
12678	Shield—Second I.F. transformer shield complete with shield can and holder	.38
11400	Socket—Dial lamp socket	.22
4794	Socket—4-contact 11Z3 Radiotron socket	.15
4786	Socket—6-contact 43, 75, or 78 Radiotron socket	.15
4787	Socket—7-contact 6A7 Radiotron socket	.15
12007	Spring—Retaining spring for Stock No. 12006—Package of 10	.36
12403	Transformer—First I.F. transformer complete with shield (L11, L12, C15, C16)	1.62
12676	Transformer—Second I.F. transformer complete with shield (L11, L12, C18, C19, C31)	1.72
12497	Trap—Wave trap (L1)	.70
12394	Volume Control—Control and power switch (R8, S1)	1.06
	DRIVE ASSEMBLY	
12401	Condenser—3-gang variable tuning condenser (C5, C6, C11, C12)	1.35
	Cord—Variable tuning condenser drive cord—Package of 5	.20
12608	Dial—Station selector dial scale	.45
12419	Indicator—Station selector indicator pointer	.15
12416	Pulley—Indicator pointer shaft and pulley	.24
12417	Pulley—Variable tuning condenser pulley and set screws	.24
12418	Screw—8-32x5/16 milled head, cupped point, set screw for pulley Stock No. 12417—Package of 10	.18
12422	Shaft—Variable condenser tuning knob shaft	.24
12421	Spring—Drive cord tension spring—Package of 10	.60
	REPRODUCER ASSEMBLY	
12641	Board—Reproducer terminal board	.15
12640	Bracket—Output transformer mounting bracket	.18
12674	Coil—Reproducer field coil (L15)	1.70
11469	Coil—Reproducer neutralizing coil (L14)	.30
12642	Cone—Reproducer cone and dust cap (L13)	.94
12493	Connector—3-contact female connector for reproducer cable	.30
12567	Connector—3-contact male connector for reproducer cable	.22
9711	Reproducer complete	6.42
11828	Transformer—Output transformer (T1)	1.46
11886	Washer—Spring washer to hold field coil securely—Package of 5	.30
	MISCELLANEOUS ASSEMBLY	
12548	Crystal—Dial escutcheon and crystal	1.06
12673	Knob—Station selector, volume control or range switch knob—Package of 3	.56
12672	Resistor—Wire wound ballast and line resistor comprising, two 380 ohm sections and one 42 ohm section (R15, R16, R17)	1.55
11310	Screw—Chassis mounting screw assembly comprising 1 screw, 1 lockwasher and 1 washer—Package of 4	.28
4119	Screw—Set screw for knob Stock No. 12673—Package of 10	.36

Prices quoted above are subject to change without notice.

Electrical Specifications

Frequency Ranges	**Alignment Frequencies**
"Standard broadcast"....540-1,800 kc.	"Standard broadcast"....600 kc. (osc.); 1,700 kc. (osc. and ant.)
"Short-wave"....1,800-6,500 kc.	"Short-wave"....None Required
Intermediate Frequency....460 kc.	
Radiotron Complement	
(1) RCA-6A7....First Detector-Oscillator	(3) RCA-75....Second Detector, A-F, and A.V.C.
(2) RCA-78....Intermediate Amplifier	(4) RCA-43....Power Output
	(1) RCA-12Z3....Rectifier
Power Supply	
200-250 volts, 50-100 cycles....120 watts	200-250 volts, D-C....110 watts
Power Output	**Loudspeaker**
Undistorted....0.9 watts A-C, 0.7 watts D-C	Type....Electrodynamic
Maximum....2 watts A-C, 1.6 watts D-C	Voice Coil Impedance....2.2 ohms at 400 cycles
Pilot Lamps (2)....Mazda No. 40, 6.3 volts, 0.15 amperes	

Mechanical Specifications

Cabinet Dimensions	
Height....9¼ inches	Width....12½ inches
Depth....5½ inches	
Weight (Net)....16 pounds	Weight (Shipping)....20 pounds
Chassis Base Dimensions....9¼ inches x 4¾ inches x 3¾ inches	
Over-all Height of Chassis....6¼ inches	
Tuning Drive Ratio....3 to 1	
Operating Controls....(1) Power Switch-Volume, (2) Tuning, (3) Range Selector	

MODELS 6M,6M2
Schematic,Socket
Trimmers,Speaker

RCA MFG. CO., INC.

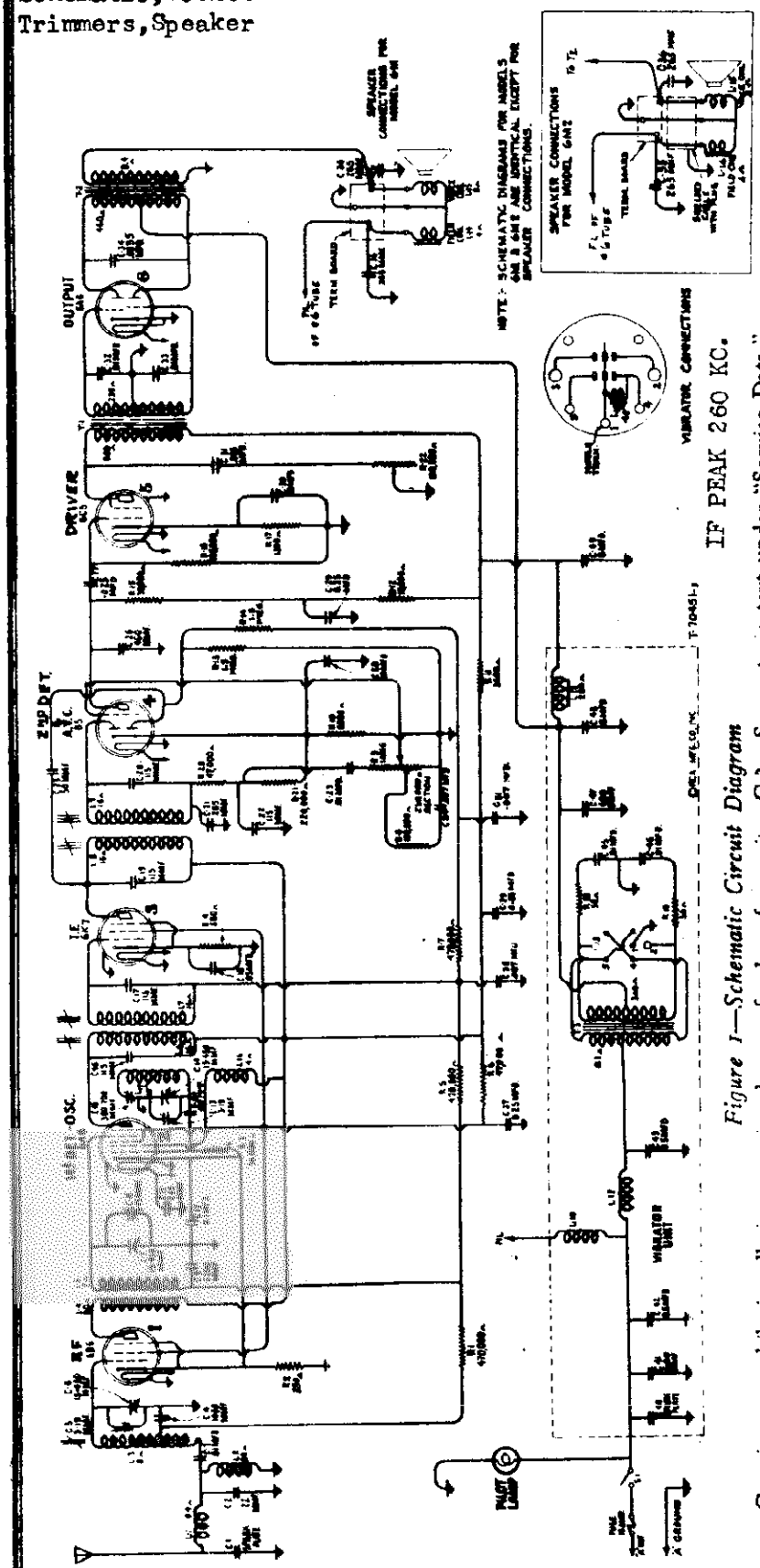

Figure 1—Schematic Circuit Diagram

Certain automobile installations require change of value of capacitor C-3. See note in text under "Service Data."

IF PEAK 260 KC.

Power Rating

Supply Voltage ... 6.3 Volts (Storage Battery)
Current Drain ..... 7.3 Amperes at 6.3 Volts
Fuse Protection ..... 15 Amperes
Pilot Lamp ..... Mazda No. 44, 6.3 Volts

Output Rating

Maximum ..... 9.0 Watts
Undistorted ..... 6.0 Watts

Tuning Range ..... 540 to 1,600 kc.

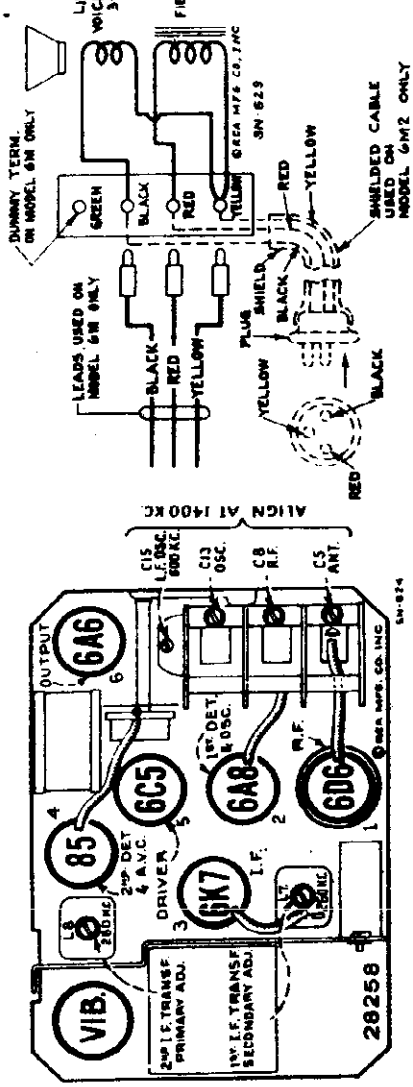

Figure 2—Loudspeaker Schematic and Wiring

Figure 3—Radiotron, Coil, and Trimmer Locations

©John F. Rider, Publisher

RCA MFG. CO., INC.

MODELS 6M, 6M2
Voltage, Data
Visual Alignment

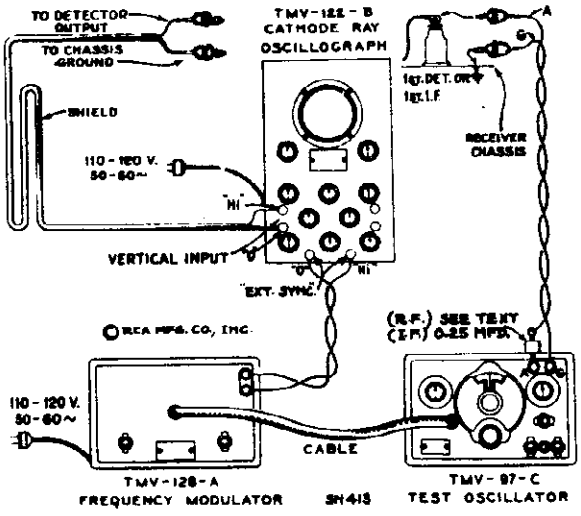

Figure 4—Alignment Apparatus Connections

RADIOTRON COMPLEMENT

(1) RCA-6D6.....Radio-Frequency Amplifier
(2) RCA-6A8.....First Detector–Oscillator
(3) RCA-6K7.....Intermediate Amplifier

(4) RCA-85.....Second Detector, A-F, and A.V.C.
(5) RCA-6C5..... Driver
(6) RCA-6A6.....Power Output Amplifier

ALIGNMENT FREQUENCIES

I. F. Transformers .....260 kc.
Oscillator Coil .....600 kc. and 1,400 kc.

Detector Coil .....1,400 kc.
Antenna Coil .....1,400 kc.

LOUDSPEAKER

Type ..... Electrodynamic
Impedance (v. c.)..... 3 Ohms at 400 Cycles

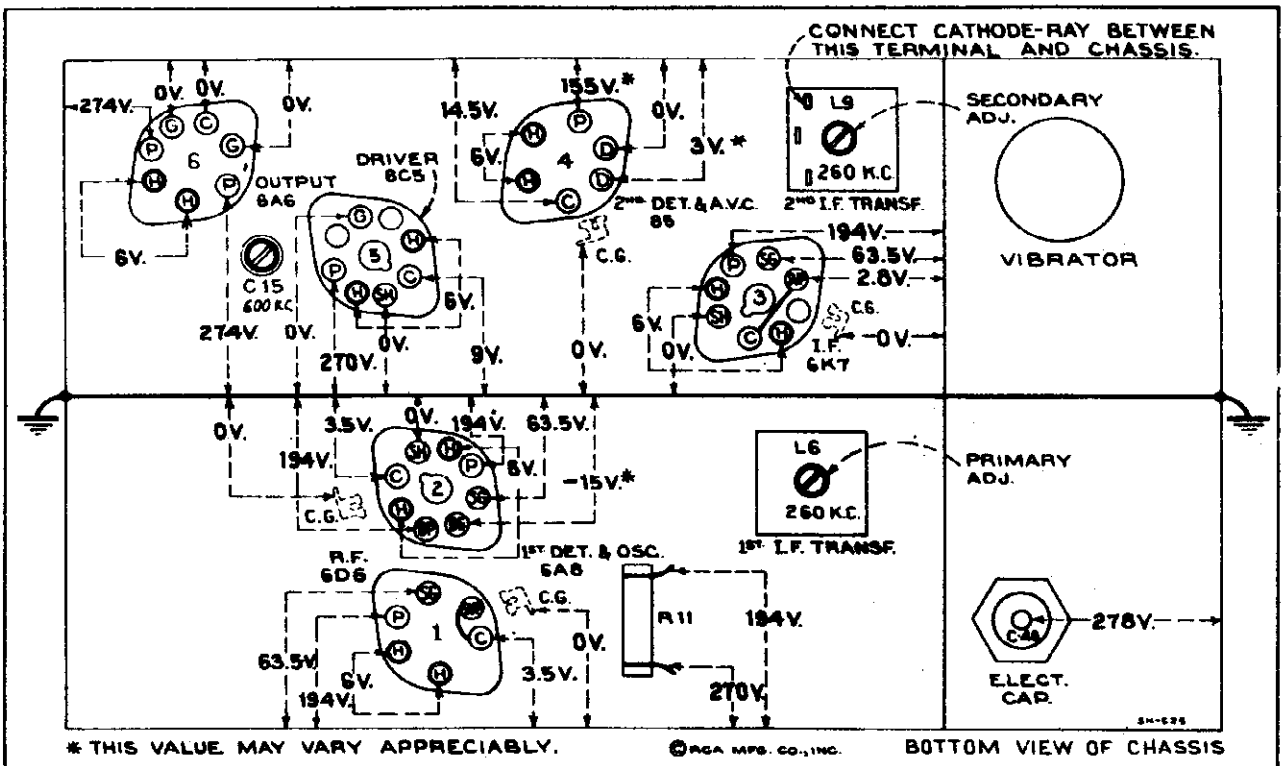

Figure 5—Radiotron Socket Voltages and Trimmer Locations
(Measured at 6.3 volts battery supply—Volume Control Maximum—No Signal)

Radiotron Socket Voltages

Operating conditions of the basic circuits of this instrument may be determined by measuring the voltages applied to the tube elements. Figure 5 shows the voltage values from the socket contacts to ground and appearing across the heater contacts (H-H). Each value as specified should hold within ±20% when this instrument is normally operative with all tubes intact and rated voltage applied. Variations in excess of this limit will usually be indicative of trouble.

The voltages given on this diagram are actual measured voltages, and are obtained with the voltmeter load in the circuit.

To fulfill the conditions under which the d-c voltages were measured requires a 1,000-ohm-per-volt d-c voltmeter having ranges of 10, 50, 250, and 500 volts. Voltages below 10 volts should be measured on the 10-volt scale; between 10 and 50 on the 50-volt scale; between 50 and 250 on the 250-volt scale; and above 250 on the 500-volt scale.

©John F. Rider, Publisher

MODELS 6M,6M2
Chassis Wiring

RCA MFG. CO., INC.

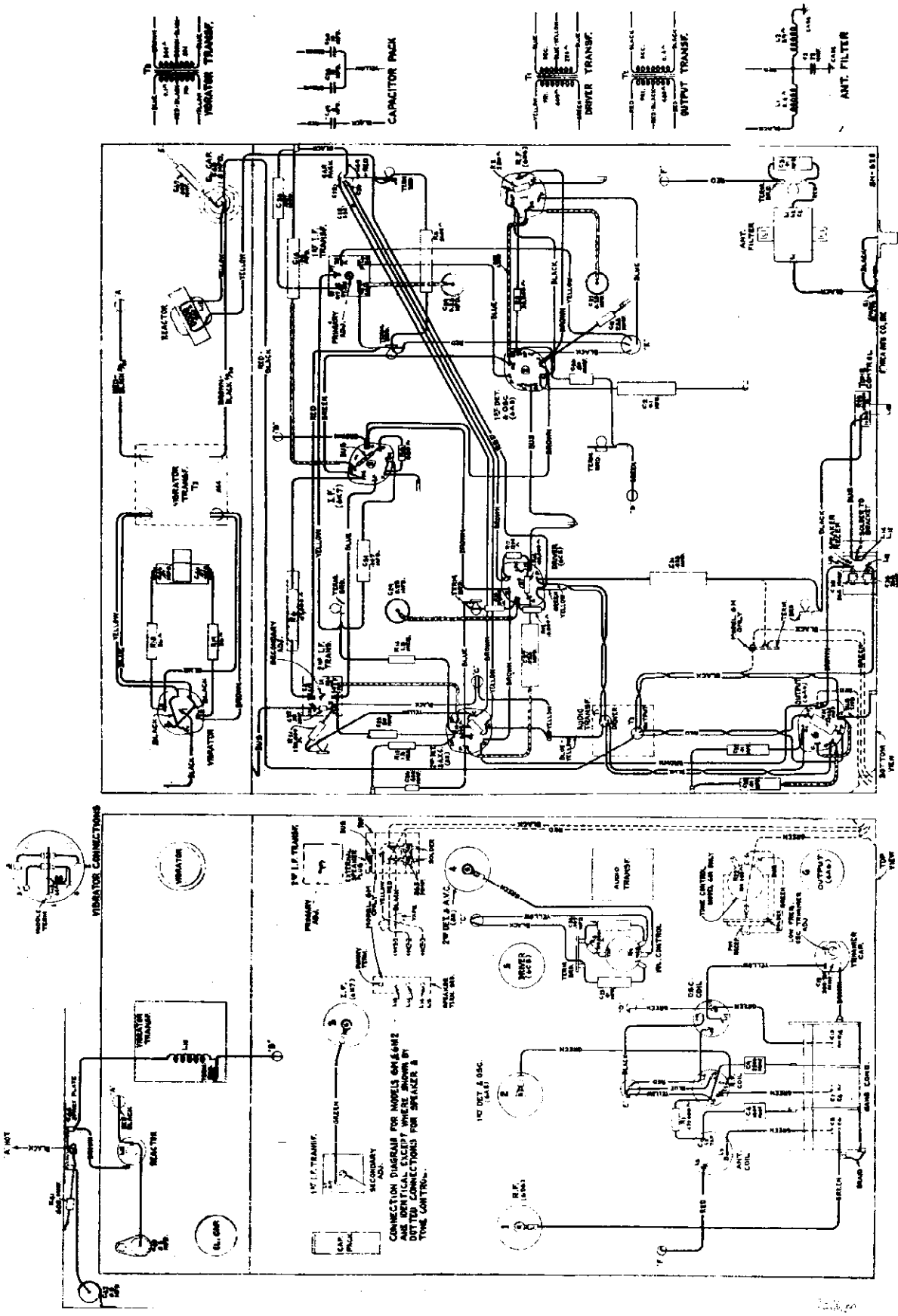

Figure 2—Chassis Wiring Diagram

©John F. Rider, Publisher

RCA MFG. CO., INC.

MODELS 6M, 6M2

Circuit Data

Alignment

General Description

These two automobile receivers represent the results of thorough development, design, and substantial manufacture. Noteworthy technical improvements have been applied in achieving marked advantages of installation, operation, and efficiency of performance.

Model 6M is a single-unit receiver containing the radio chassis, power conversion system, and loudspeaker all in one housing. A convenient three-contact loudspeaker receptacle installed on the chassis case permits the addition of a remote dynamic loudspeaker if desired.

Model 6M2 is a double-unit receiver utilizing a chassis and its power conversion equipment similar to the Model 6M, assembled together in one case, with its loudspeaker mounted individually in a separate cylindrical housing.

Engineering features incorporated in these instruments are: The inclusion of ignition suppression means within the circuits of the receiver; reduction of power line modulation in antenna circuit; improved high-gain molded core antenna coil; permeability tuned intermediate frequency transformers; continuously variable high-frequency tone control; and a "plug-in" type of synchronous rectifier-vibrator for obtaining high-voltage supply.

Correct arrangement of parts, adequate antenna, and the ingenious insertion of filters at proper points in the circuit insure minimum disturbances from apparatus associated with the electrical circuits of the automobile and from outside sources.

Both receivers are compactly housed in substantial metal cases. Removable covers permit ready access to the under and top sides of the chassis. Flexible shafts interconnect the operating head to the controlled devices within the receiver housing. These units are adaptable for mounting on either the right-hand or the left-hand side of the engine firewall as local conditions demand.

Circuit Arrangement

The schematic and wiring layouts of the electrical circuit are shown in Figures 1 and 2 respectively. From these diagrams it may be seen that six Radiotrons are incorporated in the basic superheterodyne circuit. In sequence, there is an r-f stage, a dual first detector–oscillator stage, a single i-f stage, a second detector–audio amplifier–a.v.c. stage, a driver stage, and a class "B" output stage. The power supply system contains a mechanical interrupter and rectifier. The following circuit features are of particular importance:

Noise Filter—Reduction of ignition interference and similar disturbances are brought about by filter arrangements in the antenna input circuit and the "A" battery input lead. This antenna filter, L-1, C-1, and C-2, is a "low-pass" type, having an acceptance band below 1,600 kc. The inductance L-2 is for the purpose of shunting out power line hum pickup.

Tuned Circuits—There are seven resonant circuits in the radio frequency end of the receiver. The r-f, first detector, and oscillator grid circuits are tuned by a three-gang tuning condenser. The remaining tuned circuits consist of the primary and secondary windings of the i-f transformers, which resonate with fixed condensers and are tuned by molded cores to a nominal frequency of 260 kilocycles.

Detection—Detection takes place as a result of the rectifying action of one of the diodes of the RCA-85 tube, the current being developed through resistors R-20 and R-21. The audio component of this current is coupled through capacitor C-23 to the one megohm volume control R-9. The arm of this volume control is connected to the grid of the RCA-85 tube, thus giving a means of continuously varying the voltage input to the audio amplifier.

A.V.C.—The a.v.c. diode of the RCA-85 tube is coupled through capacitor C-25 to the primary of the second i-f transformer. Due to the rectifying action of this diode, a current is developed through resistor R-13. The d-c voltage drop in this resistor is used for automatically regulating the control grid bias of the r-f, first detector, and i-f stages, the voltage being applied through a suitable filter network. Due to the fact that the a.v.c. diode returns through resistor R-13 to a point which is 15 volts negative with respect to its cathode, the a.v.c. action is delayed until the input signal reaches a predetermined level. This gives more uniform output for widely varying signal strengths into the antenna.

Audio System—As mentioned under "Detection," the audio component of the detected signal is selected from the manual volume control and applied to the control grid of the RCA-85 tube. The plate circuit of this tube is connected through capacitor C-27 to the control grid of the driver tube, an RCA-6C5. The plate circuit of the driver tube is coupled through the driver transformer T-1 to the control grids of the class "B" output tube, RCA-6A6. This tube is coupled through the output transformer T-2 to the loudspeaker.

SERVICE DATA

NOTE: Certain models of 1936 automobiles are equipped with "high-capacitance type" (400 mmfd. or greater) built-in antennas. The 1936 models of Dodge, De Soto, and Chrysler are examples of automobiles so equipped. Installation of receivers in automobiles with such "high-capacity" antennas necessitates the following modification of the antenna circuit of the receiver to suit the characteristics of the antenna installation:

Remove the tubular paper-covered capacitor C-3 (.01 mfd.). Figure 2, and replace with the small molded type capacitor (500 mmfd.) furnished with Etenchcon Kit for respective model of automobile.

Alignment Procedure

There are four alignment trimmers provided in the antenna coil, detector coil, and oscillator coil tuned circuits. The i-f transformer adjustments are made by means of four screws attached to molded cores.

NOTE: The antenna coil has a molded core which is adjusted at the factory for the correct inductance. This adjustment should not be disturbed.

In readjusting the tuned circuits, it is important to apply a definite procedure and to use adequate and reliable test equipment. A standard test oscillator, such as the RCA Stock No. 9595, will be required as the source of signal at the specified alignment frequencies. Means for indication of the receiver output during alignment is also necessary to accurately shown when the correct point of adjustment is reached. Two indication methods are applicable—one requires use of the cathode-ray oscillograph, and the other requires a voltmeter or glow-type indicator. The cathode-ray alignment method is advantageous in that the indication provided is in the form of a wave image which represents the resonance characteristics of the circuits being tuned. This type of alignment is possible through use of apparatus such as the RCA Stock No. 9558 Frequency Modulator and the RCA Stock No. 9545 Cathode-Ray Oscillograph. Alignment by the output meter method should be indicated by an instrument such as the RCA Stock No. 4317 Neon Glow Indicator. The two procedures are outlined as follows:

CATHODE-RAY ALIGNMENT

Attach the cathode-ray oscillograph vertical input terminals to the second detector output, with the "Hi" connected to the junction of the two resistors, R-20 and R-21, and the "0" connected to the receiver chassis. Advance the vertical amplifier gain control of the oscillograph to full-on, allowing it to remain at such position for all adjustments. Turn the vertical "A" amplifier to "On." Set the oscillograph power switch to "On" and adjust the intensity and focusing controls to give a sharply defined spot on the screen. Interconnect the frequency modulator impulse generator terminals to the oscillograph "Ext. Sync." terminals, as shown by Figure 4.

I-F Adjustments

(a) Connect the output of the test oscillator to the control grid cap of the i-f tube (RCA-6K7) through a 0.25 mfd. capacitor and connect the ground of the oscillator to the receiver chassis. Tune the oscillator to 260 kc., place its modulation switch to "On" and its output range switch to "Hi." The frequency modulator must not be connected to the oscillator for the preliminary adjustments.

(b) Set the cathode-ray oscillograph horizontal "B" amplifier to "Tuning" and the synchronizing switch (tuning) to "Int." Place the synchronizing input and frequency controls at about their mid-positions. Turn the range switch to its No. 1 position.

(c) Increase the output of the oscillator until a deflection is noticeable on the oscillograph screen. The figure obtained represents several waves of the detected signal, the amplitude of which may be observed as an indication of output. Cause the wave image formed (400-cycle waves) to be spread completely across the screen by advancing the horizontal "B" gain control. The image should be synchronized and made to remain motionless by adjustment of the synchronizing input and frequency controls.

(d) Adjust the two screws (attached to molded cores) of the second i-f transformer, one on top and one on bottom, to produce maximum vertical deflection of the oscillographic wave which is present on the screen. This adjustment places the transformer in exact resonance with the 260 kc. signal.

(e) The sweeping operation should follow using the frequency modulator. Shift the oscillograph synchronizing switch to "Ext.", change its range switch to No. 2 position and set the frequency control to its mid-position. Place the frequency modulator in operation, with its sweep range switch in the "Lo" position. Interconnect the test oscillator and frequency modulator with the special shielded patch cord provided. Turn the oscillator modulation switch to "On".

(f) Increase the frequency of the test oscillator by slowly turning its tuning control until two separate, distinct, and similar waves appear on the screen. These waves will be identical in shape, but will be totally disconnected and appearing in reversed positions. They will have a common base line, which is discontinuous. Adjust the frequency and synchronizing input controls of the oscillograph to get the proper waves and to make them remain motionless on the screen. Continue increasing the oscillator frequency until the forward and reverse curves move together and overlap, with their highest points exactly coincident. This condition will obtain at an oscillator setting of approximately 500 kc.

(g) With the images established as in (f), readjust the two screws on the second i-f transformer so that they cause the curves on the oscillograph screen to become exactly coincident throughout their lengths and have maximum amplitude.

(h) Without altering the adjustments of the apparatus, shift the output connections of the oscillator to the input of the i-f system, i. e., between the first detector (RCA-6A8) control grid and ground. Regulate the output so that the amplitude of the oscillographic image is approximately the same as used above for adjustment (g) of the second i-f transformer.

(i) The two first i-f transformer adjustment screws, one on top and one on bottom, should then be adjusted so that they cause the forward and reverse curves to become coincident throughout their lengths and have maximum amplitude. The composite wave obtained in this manner represents the resonance characteristic of the total i-f system. Lack of symmetry or irregularity of the resultant image will indicate the presence of a defect in the i-f system.

R-F Adjustments

NOTE: Before making r-f adjustments, it may be advisable to replace the bottom cover to eliminate vibrator interference.

(a) Adjust the dial pointer on the remote control head by the following procedure. Rotate tuning knob to its extreme clockwise position irrespective of location of pointer on dial. Now turn the pointer adjusting screw in the center of the back of the control unit until the pointer is at the end calibration mark below the 55 on dial scale.

(b) Attach the output of the test oscillator to the receiver input, i. e., between the antenna and ground terminals, with a 175 mmfd. capacitor in series with antenna lead.

NOTE: For r-f alignment of receivers in which the tubular paper condenser C-3 (.01 mfd.) has been replaced by the small molded condenser 500 mmfd. (change easily identified by reference to Figure 2 and bottom of chassis), use a .001 mfd. capacitor instead of the 175 mmfd. capacitor in series with the antenna lead and test oscillator.

There should be a shunt capacitor of 50 or 60 mmfd. from the antenna lead at the receiver to ground. Accurately, tune the oscillator to 1,400 kc. The oscillograph should be left connected to the second detector output circuit as for the above i-f adjustments. Return the synchronizing switch to its "Int." position and turn the range switch to its No. 1 position.

(c) Tune the receiver to a dial reading of 1,400 kc. Then regulate the oscillator output so as to increase the amplitude of the waves on the oscillograph screen to a conveniently observable size. The several waves of detected signal, as appearing on the screen, should be synchronized by operation of the synchronizing and frequency controls. Trimmers, C-13, C-8, and C-5, of the oscillator, detector, and antenna coils should then be adjusted so that each causes maximum vertical deflection (amplitude) of the images.

(d) The oscillator modulation should then be turned to "Off" and the frequency modulator placed in operation, connected to the oscillator with the shielded patch cord. Change the oscillograph synchronizing switch to "Ext.", set its range switch to its No. 2 position and the frequency control slightly above its mid-position.

(e) Increase the frequency of the test oscillator gradually, until the point is reached where the two similar, distinct, and separate wave images appear on the screen and become coincident at their highest points. This will occur at an oscillator setting of approximately 1,500 kc. These waves should be synchronized on the oscillograph screen by careful readjustment of the synchronizing and frequency controls. Readjust trimmers, C-13, C-8, and C-5, to produce complete coincidence at maximum amplitude of the two waves.

(f) Disconnect the frequency modulator from the oscillator. Place the modulation switch of the oscillator to "On" and tune the oscillator to 600 kc. Set the synchronizing switch of the oscillograph to "Int." and turn the range switch to No. 1 position.

(g) Tune the receiver station selector control so as to pick up the 600 kc. signal, disregarding the dial reading at which it is best received.

(h) Change the oscillograph synchronizing switch to "Ext." and place the oscillator modulation switch to "Off." Interconnect the frequency modulator and oscillator with the special shielded patch cord. Return the range control of the oscillograph to its No. 2 position and set the frequency control slightly above its mid-position.

(i) Shift the test oscillator to its 200-400 kc. range and tune it to the point at which the forward and reverse waves show on the oscillograph screen. This condition will obtain at an oscillator setting of approximately 230 kc. The signal obtained from the oscillator for this adjustment will be the third harmonic of 100 kc. An increase in the oscillator output may be necessary. The trimmer C-15 should then be adjusted to the point which produces maximum amplitude of the oscillographic images. It will not be necessary to rock the tuning control for this adjustment, inasmuch as the frequency modulator is varying the signal in an equivalent manner.

(j) Return trimmers C-13, C-8, and C-5 as in (c), (d), and (e) to correct for any change in high-frequency alignment which may have been caused by the adjustment of C-15.

OUTPUT METER ALIGNMENT

Place the receiver in operation with its two covers removed. Attach the output indicator across the loudspeaker voice coil circuit or across the output transformer primary. Advance the receiver volume control to its maximum position, letting it remain in such position for all adjustments. For each adjusting operation, regulate the test oscillator output control so that the signal level is as low as possible and still observable at the receiver output. Use of such small signal will obviate broadness of tuning which would otherwise result from a.v.c. action on a stronger one.

I-F Adjustments

(a) Connect the output of the test oscillator to the control grid cap of the i-f tube (RCA-6K7) through a 0.25 mfd. capacitor and connect the ground of the oscillator to the receiver chassis. Adjust the frequency of the oscillator to 260 kc. Tune the receiver to a point where no interference is received from the heterodyne oscillator or local stations.

(b) Adjust the two screws (attached to molded cores) of the second i-f transformer, one on top and one on bottom, until maximum output is produced by the indicating device.

(c) Remove the oscillator from the i-f tube input and connect it between the control grid cap of the first detector tube (RCA-6A8) and chassis-ground, using the 0.25 mfd. capacitor as previously. Allow its tuning to remain at 260 kc. Tune the receiver to avoid interference as in (a).

(d) Adjust the two screws of the first i-f transformer for maximum (peak) receiver output. The indication for this adjustment will be broad due to the "flat-top" characteristic of the i-f system. The two screws should, therefore, be very carefully adjusted so that the indicator remains fixed at maximum as the oscillator is shifted through a range 2 kc. above and below its normal setting of 260 kc. An irregular double-peaked indication is to be avoided.

R-F Adjustments

NOTE: Before making r-f adjustments, it may be advisable to replace the bottom cover to eliminate vibrator interference.

(a) Adjust the dial pointer on the remote control head by the following procedure. Rotate tuning knob to its extreme clockwise position irrespective of location of pointer on dial. Now turn the pointer adjusting screw in the center of the back of the control unit until the pointer is at the end calibration mark below the 55 on dial scale.

(b) Connect the output of the test oscillator to the antenna-ground terminals of the receiver with a 175 mmfd. capacitor in series with the antenna lead.

NOTE: For r-f alignment of receivers in which the tubular paper condenser C-3 (.01 mfd.) has been replaced by the small molded condenser 500 mmfd. (change easily identified by reference to Figure 2 and bottom of chassis), use a .001 mfd. capacitor instead of the 175 mmfd. capacitor in series with the antenna lead and test oscillator.

There should be a shunt capacitor of 50 or 60 mmfd. from the antenna lead at the receiver to ground. Tune the oscillator to 1,400 kc. Allow the output indicator to remain attached to the receiver output.

(c) Tune the receiver so that the dial reading is 1,400 kc. Then adjust the oscillator, detector, and antenna coil trimmers, C-13, C-8, and C-5 respectively, tuning each to the point producing maximum indicated receiver output.

(d) Shift the oscillator frequency to 600 kc. and tune the receiver to pick up this signal, disregarding the dial reading at which it is best received. The oscillator series trimmer, C-15, should then be adjusted, simultaneously rocking the receiver tuning control backward and forward through the signal until maximum (peak) receiver output results from the combined operations. The adjustment of C-13, C-8 and C-5 should be repeated as in (c) to correct for any change in its alignment due to the adjustment of C-15.

©John F. Rider, Publisher

REPLACEMENT PARTS

Insist on genuine factory tested parts, which are readily identified and may be purchased from authorized dealers

Stock No.	DESCRIPTION	List Price
	RECEIVER ASSEMBLIES	
12511	Cap—Grid contact cap—Package of 5	$0.15
11130	Capacitor—Adjustable capacitor—(C15)	.40
11209	Capacitor—50 Mmfd.—(C25)	.26
12270	Capacitor—80 Mmfd.—(C50)	.28
8076	Capacitor—115 Mmfd.—(C22)	.20
11908	Capacitor—115 Mmfd.—(C16, C17, C19, C20)	.28
11181	Capacitor—265 Mmfd.—(C11, C21, C35, C36)	.20
11171	Capacitor—400 Mmfd.—(C26)	.22
4210	Capacitor—600 Mmfd.—(C47)	.25
4094	Capacitor—690 Mmfd.—(C41)	.26
12268	Capacitor—1,400 Mmfd.—(C4)	.34
12269	Capacitor—2,200 Mmfd.—(C9)	.42
5005	Capacitor—.0035 Mfd.—(C34)	.16
5148	Capacitor—.007 Mfd.—(C24, C38, C51)	.20
4858	Capacitor—.01 Mfd.—(C3, C28, C32, C33)	.25
4870	Capacitor—.025 Mfd.—(C27)	.20
5196	Capacitor—.035 Mfd.—(C31)	.18
4636	Capacitor—.05 Mfd.—(C18)	.30
4841	Capacitor—.1 Mfd.—(C12)	.22
12237	Capacitor—.25 Mfd.—(C29, C37, C39)	1.02
3019	Capacitor—0.5 Mfd.—(C45)	.42
12234	Capacitor—8 Mfd.—(C40)	1.34
12233	Capacitor Pack—Comprising 2 sections each .01 Mfd.—(C43, C46)	1.02
12238	Capacitor Pack—Comprising one 8 Mfd. and two 10 Mfd. sections—(C28, C30, C49)	2.30
12.23	Coil—Antenna coil—(L3)	.94
12235	Coil—Choke coil—(L12)	.50
12225	Coil—Oscillator coil—(L16, L17)	.90
12224	Coil—R. F. coil—(L4, L5)	1.32
12220	Condenser—3-gang variable tuning condenser—(C1, C 6,C7, C8, C13, C14)	4.50
12006	Core—Adjustable core for I. F. transformer Stock No. 12228 and No. 12229	.32
12289	Coupling—Station selector flexible shaft coupling	.20
12219	Filter—Antenna filter—(L1, L2, C2)	1.26
12221	Gear—Variable tuning condenser shaft drive gear	.36
12222	Gear—Variable tuning condenser worm gear	.36
12242	Guide—Station selector shaft guide	.18
12483	Pin—Contact pin for speaker leads (used in 6M only)—Package of 5	.15
12485	Pin—Contact pin for tone control lead (used in 6M only)—Package of 5	.15
12232	Reactor—Filter reactor—iron core—(L13)	1.10
5034	Resistor—56 ohm—carbon type, ½ watt—(R16, R19)—Package of 5	1.00
12481	Resistor—330 ohm—insulated, ½ watt—(R2)—Package of 5	1.00
12262	Resistor—580 ohm—insulated, ½ watt—(R4)—Package of 5	1.00
12267	Resistor—1,200 ohm—insulated, ½ watt—(R17)—Package of 5	1.00
8097	Resistor—5,600 ohm—carbon type, 2 watt—(R11)	.25
12265	Resistor—6,800 ohm—insulated, ½ watt—(R10)—Package of 5	1.00
12288	Resistor—10,000 ohm—insulated, ½ watt—(R12)—Package of 5	1.00
12266	Resistor—39,000 ohm—insulated, ½ watt—(R15)—Package of 5	$1.00
5132	Resistor—47,000 ohm—carbon type, 1/10 watt—(R20)—Package of 5	.75
12073	Resistor—47,000 ohm—carbon type, 1 watt—(R6)—Package of 5	1.10
12286	Resistor—56,000 ohm—insulated, ½ watt—(R3)—Package of 5	1.00
12263	Resistor—100,000 ohm—insulated, ½ watt—(R16)—Package of 5	1.00
11281	Resistor—100,000 ohm—carbon type, 1/10 watt—(R8)—Package of 5	.75
12264	Resistor—220,000 ohm—insulated, ½ watt—(R21)—Package of 5	1.00
11452	Resistor—470,000 ohm—carbon type, 1/10 watt—(R5, R7)—Package of 5	.75
12285	Resistor—470,000 ohm—insulated, ½ watt—(R1)—Package of 5	1.00
12287	Resistor—1.5 megohm—insulated, ½ watt—(R13, R14)—Package of 5	1.00
3584	Ring—Retaining ring for R. F. or oscillator coil—Package of 5	.40
9129	Ring—Radiotron shield ring—Package of 5	.10
3623	Shield—R. F. or oscillator coil shield	.30
12290	Shield—Radiotron shield	.18
4786	Socket—6-contact 6D6 or 75 Radiotron socket	.15
12243	Socket—7-contact 6A6 Radiotron socket	.18
12227	Socket—8-contact 6A8, 6C8 or 6K7 Radiotron socket	.18
12241	Socket—Vibrator socket	.18
12226	Stud—Variable tuning condenser mounting stud assembly—Package of 4	.22
12228	Transformer—First I. F.—(L6, L7, C16, C17, R5, R7)	2.24
12230	Transformer—Output transformer—(T1, T2)	2.93
12229	Transformer—Second I. F. transformer—(L8, L9, C18, C20, C21, R20)	2.02
12231	Transformer—Vibrator power transformer—(T3)	3.48
12236	Vibrator complete	4.55
12240	Volume Control—(R9)	1.14
	CONTROL BOX AND FLEXIBLE SHAFT ASSEMBLIES	
12505	Box—Control box complete—less flexible shafts	8.35
12578	Dial—Station selector indicator dial (standard)	.50
12579	Knob—Station selector (tuning) knob (standard)	.28
12580	Knob—Volume control knob (standard)	.20
11891	Lamp—Control box dial lamp—Package of 5	.65
12504	Shaft—Tuning control flexible shaft complete—approx. 21½ in. long	1.20
12503	Shaft—Volume control flexible shaft complete—approx. 21½ in. long	1.20
	REPRODUCER ASSEMBLIES, MODEL 6M	
12482	Board—Reproducer terminal board	.30
12450	Coil—Field coil—(L14)	1.60
12451	Cone—Reproducer cone complete—(L15)	1.60
9687	Reproducer—Reproducer complete	3.65
	REPRODUCER ASSEMBLIES, MODEL 6M2	
12536	Board—2-contact reproducer terminal board	$0.20
12525	Cable—Shielded reproducer cable complete with 3-contact male connector	1.08
12524	Coil—Field coil—(L14)	1.85
12523	Cone—Reproducer cone—(L15)	1.65
12527	Housing—Reproducer housing complete	2.65
9661	Reproducer—Reproducer complete	11.35
12528	Screw—Reproducer housing screw—Package of 5	.14
	MISCELLANEOUS ASSEMBLIES	
4287	Body—Antenna cable female connector body—Package of 10	.40
4289	Body—"A" lead fuse connector body—Package of 10	.35
12510	Button—Plug button for receiver housing (used on 6M only)	.16
12444	Cable—Shielded antenna cable approx. 8 in. long, complete with female-section of connector	.58
12473	Cable—Shielded antenna lead-in cable, approx. 31 in. long, complete with 2 male connections of connector	1.12
4288	Cap—Male connector cap for "A" lead or antenna cable—Package of 10	.35
5025	Capacitor—Generator capacitor	.40
4293	Capacitor—Ammeter capacitor	.60
11416	Capacitor—.5 Mfd.—(C42)	.50
4291	Clip—"A" lead ammeter clip—Package of 10	.70
12457	Cover—Receiver housing top cover (used on 6M only)	.65
12458	Cover—Receiver housing bottom cover assembly (used on 6M only)	.60
12461	Cover—Receiver case bottom cover (used in 6M2 only)	.60
12462	Cover—Receiver case top cover (used in 6M2 only)	.62
12532	Fastener—Receiver housing top cover fastener—Package of 10	.30
4286	Ferrule—Antenna cabl eor "A" lead connector ferrule and bushing—Package of 10	.38
5023	Fuse—"A" lead fuse—15 amp.—Package of 5	.40
12446	Grille—Speaker grille assembly (used on 6M only)	$0.88
12456	Housing—Receiver housing complete (used on 6M only)	4.80
12460	Housing—Receiver case complete (used on 6M2 only)	4.58
4290	Insulator—Fuse connector insulator—Package of 10	.35
4283	Knob—Tone control knob (used on 6M only)—Package of 5	.70
4132	Knob—Tone control knob (used on 6M2 only)—Package of 5	.55
12445	Lead—"A" lead (set end), approx. 8 in. long, complete with male section of connector	.26
12506	Plate—Name plate and mounting screws (used in 6M only)	.38
12507	Plate—Name plate and mounting screws (used in 6M2 only)	.38
12508	Plate—RCA monogram and rivets (used on 6M2 only)	.28
12509	Ring—Rubber ring for speaker mounting (used on 6M2 only)	.38
12459	Screw—Speaker mounting screw assembly, consisting of 1 screw, 1 nut, and 1 lockwasher to mount speaker in case (used on 6M only)—Package of 4	.30
12513	Screw—Self-tapping slotted hex. head, ¼ in. long, used in receiver housing—Package of 10	.16
4393	Screw—Set screw for tone control knob Stock No. 4132 (used on 6M2 only)—Package of 10	.25
12248	Socket—3-contact socket and bracket assembly for reproducer cable	.20
12502	Socket—Pin socket and bracket assembly for tone control lead	.30
4284	Spring—Antenna cable connector spring—Package of 10	.30
12448	Stud—Receiver mounting stud assembly, comprising 1 stud, 1 washer, 1 lockwasher and 1 nut	.30
12254	Stud—Speaker mounting stud assembly, comprising 1 stud, 1 spacer, 1 washer and 2 nuts (used in 6M2 only)	.24
5024	Suppressor—Distributor suppressor	.35
12249	Tone Control—(R22)	.85
4285	Washer—Antenna cable connector insulating washer—Package of 10	.22

The prices quoted above are subject to change without notice.

Tuning Condenser Drive

Smooth control should be obtained over the entire tuning range of the variable condenser. If irregularity is present, check the action of the gear mechanism for binding or backlash at every point within the tuning range. A bind may be due to improper mesh between the worm gear and the large gears on the condenser shaft. To correct such a condition, loosen the three screws holding the gear plate and adjust the mesh of the gears to a position which gives smooth operation. Gear backlash is prevented by the small compression spring between the two large gears on the rotor shaft.

Interrupter

The mechanical interrupter used in the power system is constructed with a plug-in base, so as to be easily removed from the receiver. Its adjustments have been correctly set during manufacture by means of special equipment. In cases of faulty operation of the interrupter, a renewal should be made.

The symmetrical plug-in base on this device permits the unit to be placed in its socket so as to give correct output voltage polarity on an automobile with either a positive or negative "A" ground. For installation with positive "A" ground, insert vibrator so positive (+) symbol is nearest label on vibrator compartment partition; for negative "A" ground, insert with negative (-) symbol nearest label.

Radiotrons

Deterioration of tubes and their approach to failure is usually evidenced by noisy or intermittent operation, loss of sensitivity, and distorted tone quality. When suspected as faulty, the tubes should be removed from the receiver and checked with standard tube testing apparatus. It is not feasible to test the tubes while in the receiver, due to measurement inaccuracies which would result from the effects of the circuits.

Receiver Housing

The screws holding the receiver chassis to the case must all be in place and tightly installed, inasmuch as they appreciably affect the ground resistance of the assembly and will consequently have a bearing on the amount of ignition noise received.

Final Tuning Dial Adjustment

Final adjustment of the dial pointer may be made during operation after the receiver is installed in automobile. To do this, tune in a station of known frequency (say 760 kc.—approximately 76 on dial) as accurately as possible. Now reset the dial pointer to exactly 76 on the dial by means of the adjusting screw at center rear of operating head.

Volume Control and Power Switch

This adjustment is made by turning the small control knob fully clockwise and then fully counterclockwise. This places the friction clutch mechanism on the volume control in proper alignment.

OPERATING CONTROLS (1) Power Switch-Volume, (2) Tuning, (3) High-Frequency Tone

TUNING DRIVE RATIO 12-to-1

WEIGHT

	Model 6M2	Model 6M
Receiver and Accessories Complete	29 Pounds	24¼ Pounds

©John F. Rider, Publisher

RCA MFG. CO., INC.

MODELS 6BT,6BK,6BT6,6BK6
Schematic,Socket
Pickup Connections
Battery Cable

Figure 8
Batt.Cable
(6BT,6BK)
Stock No.
12826

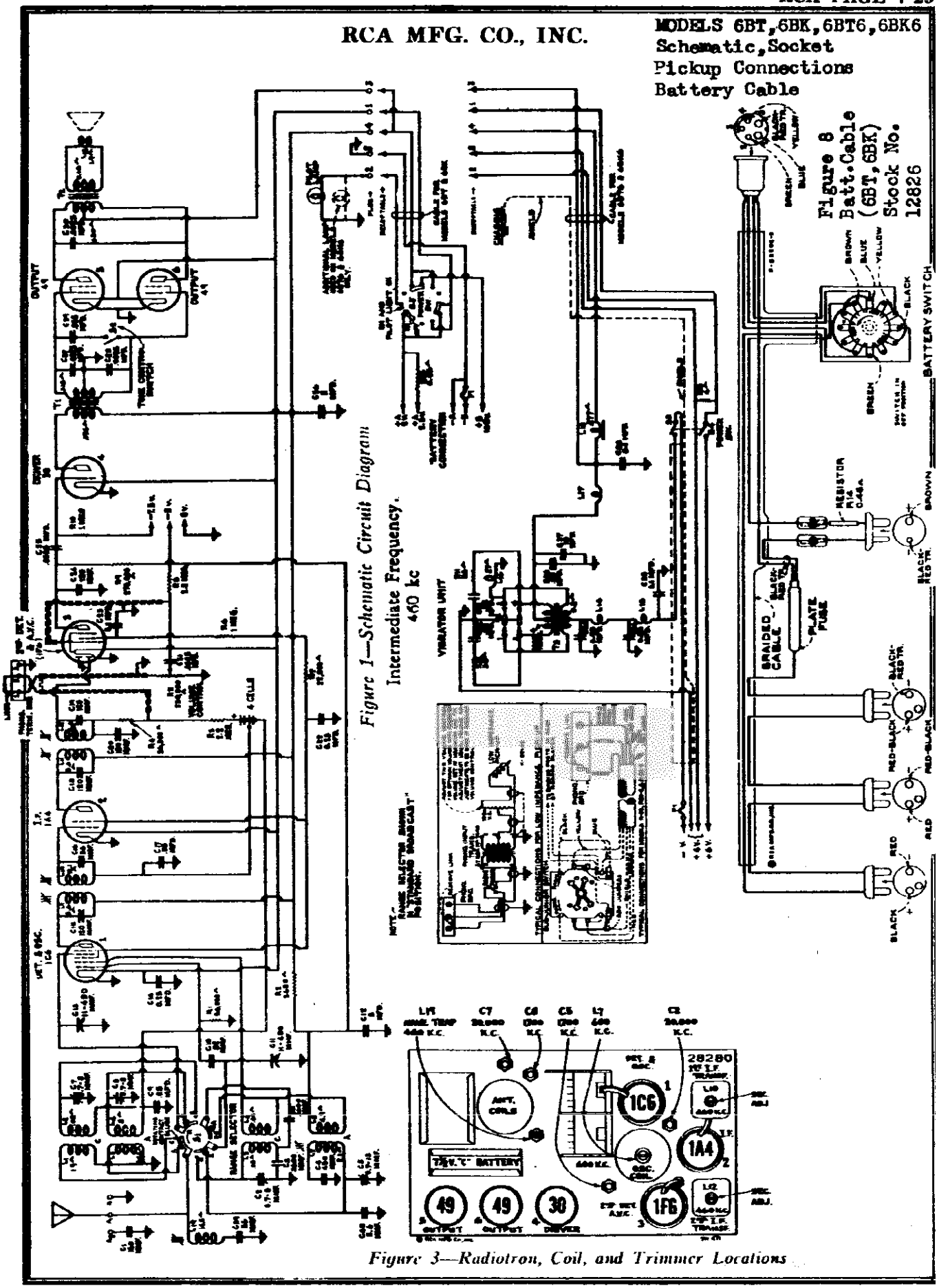

Figure 1—Schematic Circuit Diagram
Intermediate Frequency,
460 kc

Figure 3—Radiotron, Coil, and Trimmer Locations

©John F. Rider, Publisher

MODELS 6BT,6BK,6BT6,6BK6
Chassis Wiring,Coil Data

RCA MFG. CO., INC.

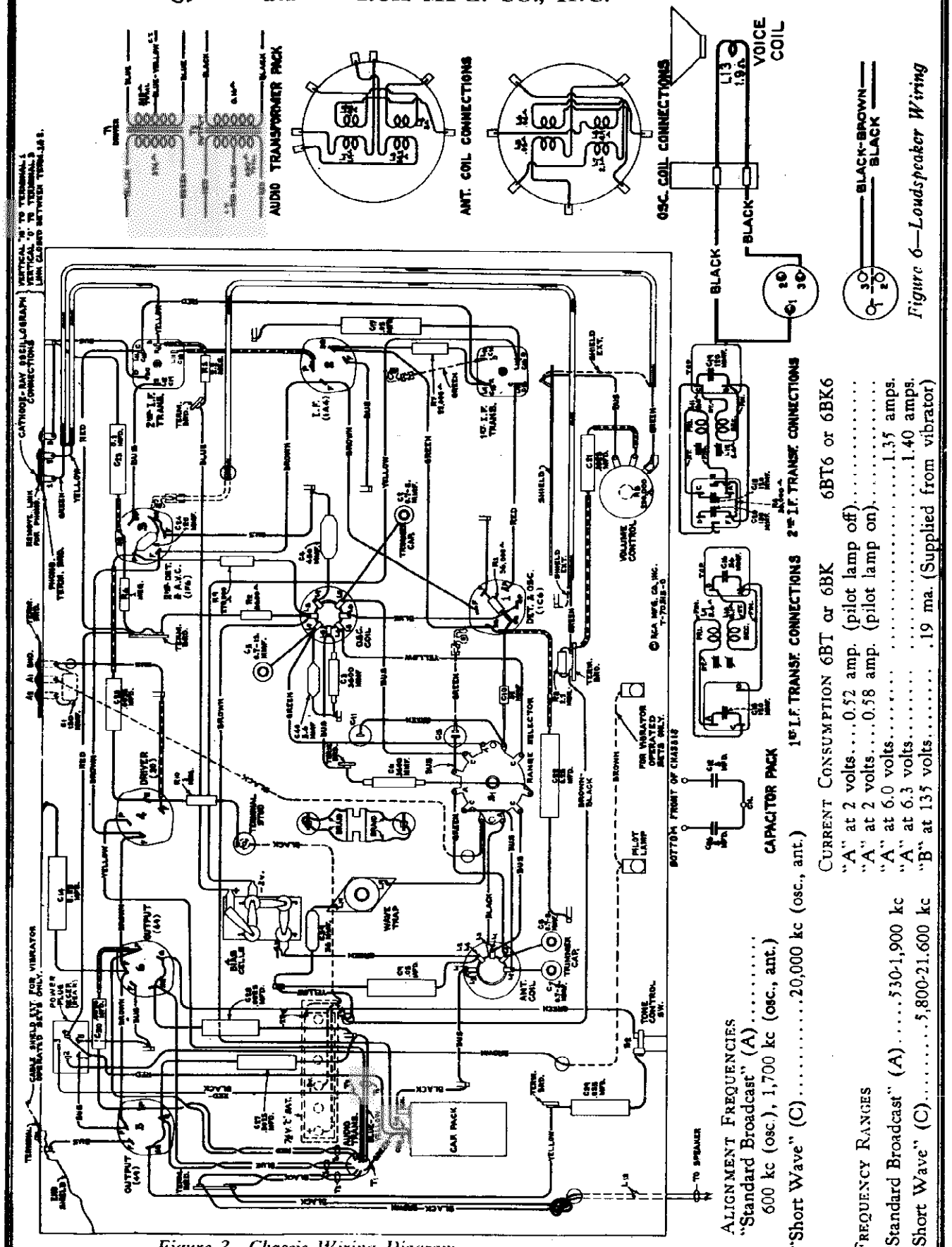

Figure 2—Chassis Wiring Diagram

Figure 6—Loudspeaker Wiring

ALIGNMENT FREQUENCIES
"Standard Broadcast" (A).....
600 kc (osc.), 1,700 kc (osc., ant.)
"Short Wave" (C).....20,000 kc (osc., ant.)

FREQUENCY RANGES
"Standard Broadcast" (A).....530-1,900 kc
"Short Wave" (C).....5,800-21,600 kc

CURRENT CONSUMPTION 6BT or 6BK 6BT6 or 6BK6
"A" at 2 volts....0.52 amp. (pilot lamp off).....
"A" at 2 volts....0.58 amp. (pilot lamp on).....
"A" at 6.0 volts.....1.35 amps.
"A" at 6.3 volts.....1.40 amps.
"B" at 135 volts..... .19 ma. (Supplied from vibrator)

©John F. Rider, Publisher

Power Unit Wiring

MODELS 6BT, 6BK, 6BT6, 6BK6

RCA MFG. CO., INC. Voltage, Resistance, Trimmers

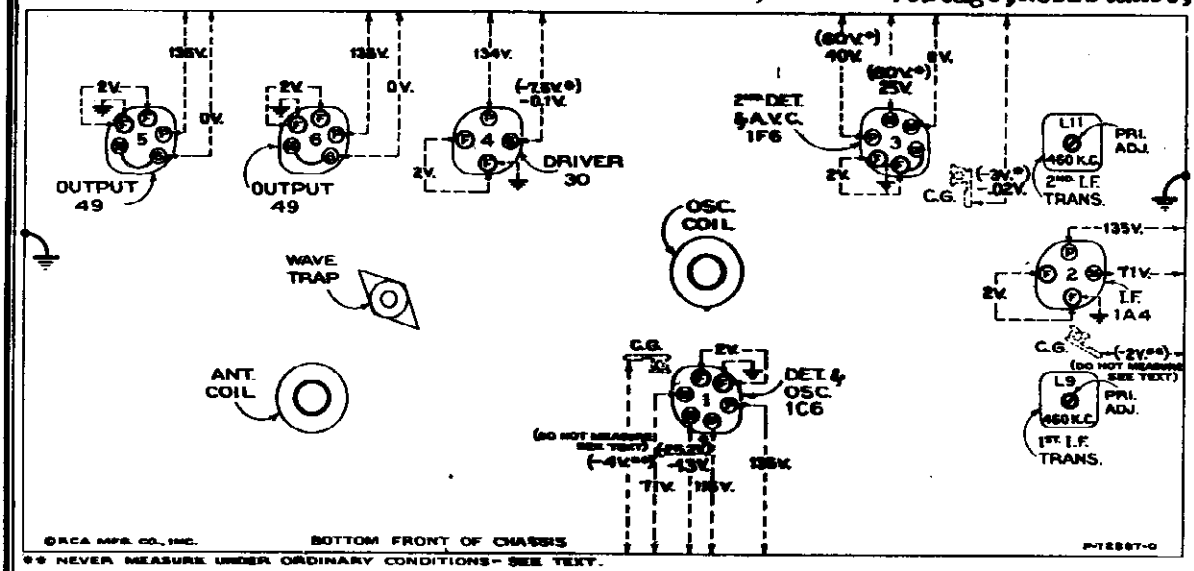

Figure 7—Radiotron Socket Voltages, Coil, and Trimmer Locations

Measured with all batteries at normal voltage—Tuned to approximately 1,000 kc ("Standard broadcast")—No signal being received—Volume control optional

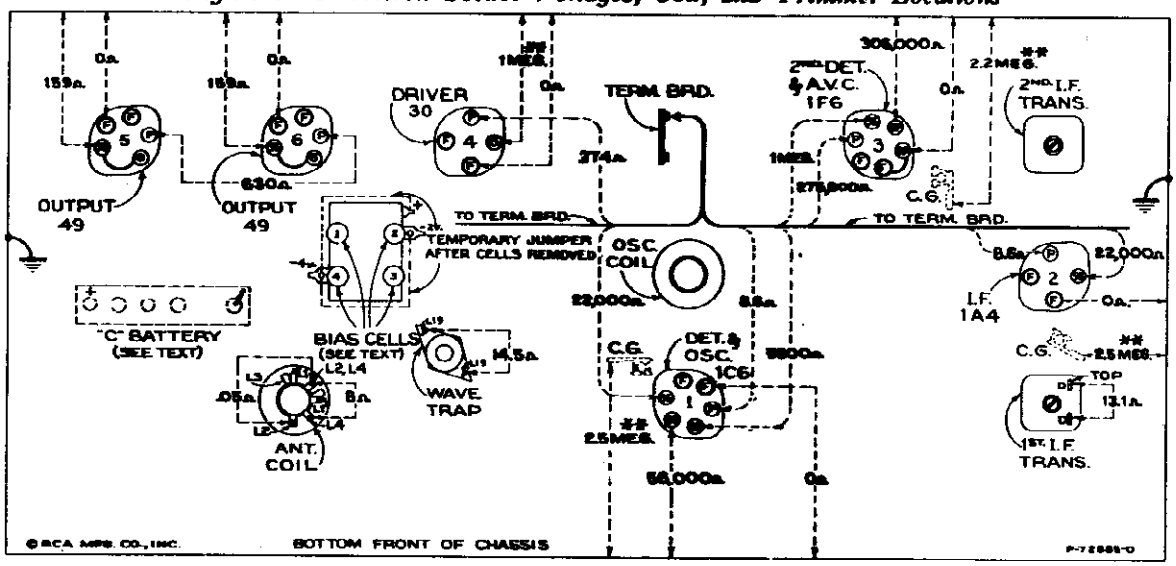

Powersupply cable disconnected—Radiotrons in sockets—Tuning condenser in full-mesh—Bias cells and "C" battery removed—Volume setting optional

Figure 5—Resistance Diagram

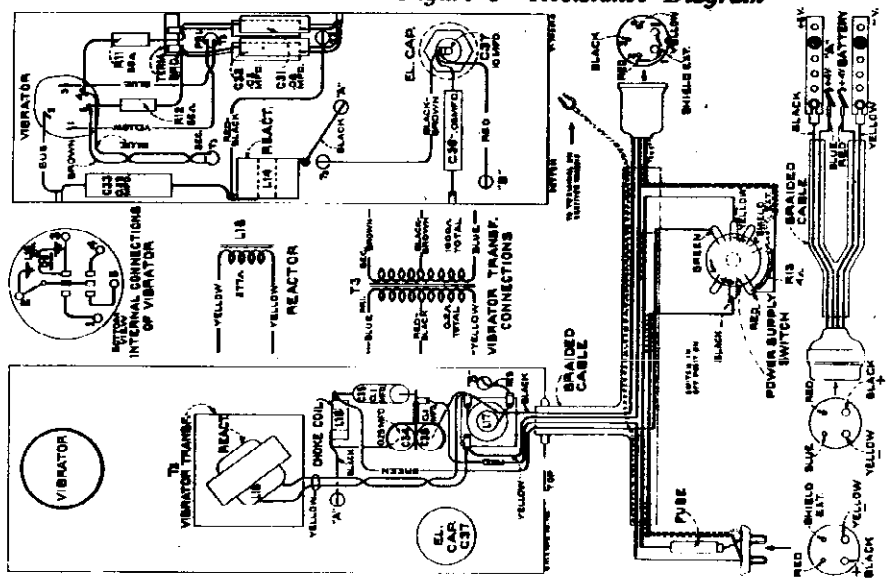

Figure 4—Power Unit Wiring (6BT6 and 6BK6)

Radiotron Plate Current Readings

Measured with Milliammeter Connected at Tube Socket Plate Terminals under Conditions Similar to Those of Voltage Measurements

(1) RCA-1C6—1st. Det..... 1.2 ma.
—Osc. ..... 3.7 ma.
(2) RCA-1A4—I.F. ..... 3.4 ma.
(3) RCA-1F6—2nd Det.—A.F.—A.V.C.. 0.3 ma.
(4) RCA-30—Driver ..... 4.0 ma.
(5) RCA-49—Output ..... 1.6 ma.
(6) RCA-49—Output ..... 1.6 ma.

©John F. Rider, Publisher

MODELS 6BT,6BK,6BT6,6BK6
Circuit Data,Alignment Notes, Battery,Parts List

RCA MFG. CO., INC.

General Features

These instruments employ the same type chassis. The table models 6BT and 6BT6 each employ an eight-inch, dust-proof, permanent-magnet, dynamic loudspeaker while the console Models 6BK and 6BK6 each employ a twelve-inch, dust-proof, permanent-magnet, dynamic loudspeaker. Models 6BT and 6BK obtain their plate supply from "B" batteries and their filament supply from either a 2½-volt Air-cell or a 2-volt storage battery. Models 6BT6 and 6BK6 obtain their plate supply from a compact, vibrator power-supply unit, which, in turn, is operated from a 6-volt storage battery. One cell (2 volts) of this same storage battery is used to supply filament voltage to the Radiotron. The vibrator is of the "plug-in" type which permits ready removal or replacement. Models 6BT and 6BK have a pilot-lamp switch combined with the main power switch so that the pilot lamp may be turned off, after the receiver is tuned in, to conserve battery current.

The circuit used in these receivers is of the superheterodyne type with such design features as magnetite core adjusted r-f transformers, improved core-adjusted antenna, wave-trap, high-frequency tone control, automatic volume control, phonograph terminal board, new edge-lighted dial, plunger-type air trimming capacitors, and built-in antenna coupler.

SERVICE DATA

The fundamental oscillator frequencies are established at the RCA-1C6 tube. The output of this tube is coupled to the antenna through a tuned r-f transformer. A tuned wave-trap, tuned by means of an adjustable magnetite core, is connected from antenna to ground to prevent signals of intermediate frequency (460 kc) from being introduced into the first stage as interference. Both the oscillator and antenna circuits employ magnetite coils for each band. These coils are tuned by means of individual plunger-type air trimming capacitors.

The intermediate-frequency stage is coupled to the RCA-1C6 and to the RCA-1R6 by means of tuned transformers. These transformers resonate with fixed capacitors and are adjusted by molded magnetite cores to tune to 460 kc.

The modulated signal as obtained from the output of the r-f system is detected by one of the diode plates of the RCA-1R6. The audio component of this rectified signal, which develops across the volume control R7, is fed thru coupling capacitor C21 to the control grid of the same RCA-1R6 for audio voltage amplification. The d-c component resulting from the detection process is fed thru resistor R6 to the control grid system of the RCA-1C6 and RCA-1A4 tubes, as automatic volume control bias. Bias cells are connected in these grid circuits to provide bias voltage under conditions of little or no signal. The output of the RCA-1R6 is resistance-capacitance coupled to the RCA-30 driver which, in turn, is transformer-coupled to the two RCA-49 tubes used for push-pull class B output. The output of the push-pull stage is transformer-coupled into the permanent-magnet dynamic loudspeaker. A tone-control, high-frequency tone control, consisting of C29 and R2, is connected across the secondary of the driver transformer T3.

Models 6BT6 and 6BK6 obtain their plate supply from a vibrator-type power unit. The vibrator together with the power transformer T5 combine the functions of generating alternating current and rectification. Filter chokes and capacitors are built into this unit to eliminate interference (noise) which would otherwise be introduced into the receiver circuits.

The various diagrams in this booklet contain such information as will be needed to analyze causes for defective operation if such develops. The ratings of the resistors, capacitors, coils, etc., are indicated adjacent to the symbols used from parts on the diagrams. Identification tables, such as C1, L1, R1, etc., are provided for reference between the illustrations and the Replacement Parts List. The coils, resistors, and miscellaneous windings are rated in terms of their d-c resistance only. Ratings of less than one ohm are generally omitted.

Caution: The four bias cells are used only for the purpose of supplying bias potential and should never be measured with an ordinary voltmeter or other device which draws any current. A simple check on these cells may be made by connecting a milliammeter in the plate circuit of the RCA-1C6 tube and noting the plate current reading. Then remove the two bias cells (1 and 4), being careful that the spring contact clips do not short circuit them during removal. Connect a 4-volt battery between the + and — 4v. terminals of the bias cell board, and again note the plate current reading. If the first reading obtained (with bias cells) is more than 40% from the latter reading (with 4-volt battery), all bias cells should be replaced. This 40% difference is equivalent to a change of approximately 21% battery voltage.

Alignment Procedure

There are five alignment adjustments provided in the antenna and oscillator coil tuned circuits. The r-f transformer adjustments are made by means of screws attached to molded magnetite cores. All of these circuits have been accurately adjusted during manufacture and should remain properly aligned unless affected by abnormal conditions or altered during servicing. Loss of sensitivity, improper tone quality, and poor selectivity are the usual indications of improper alignment.

The correct performance of this receiver can only be obtained when the aligning has been done with adequate and reliable apparatus. The manufacturer of this receiver has available, for sale through the distributors and dealers, a complete assortment of such service equipment as may be needed for the alignment operations.

A test oscillator, such as the RCA Stock No. 9393, is required as a source of the specified alignment frequencies. Visual indication of receiver output during the adjustments is necessary and should be accomplished by the use of an indicator such as the RCA Stock No. 4317 Power Output Indicator.

Attach the output indicator across the loudspeaker voice coil. Turn the volume control to its maximum position, letting it remain in such position for all adjustments. For each adjusting operation, regulate the test oscillator output so that the signal level is as low as possible and still be observable at the receiver output. Use of such small signal will obviate broadness of tuning which would otherwise result from a.v.c. action on a stronger one.

I-F Adjustments

The four adjustment screws (attached to molded magnetite cores) of the two i-f transformers (one on top and one on bottom of each i-f transformer) are located as shown by figures 3 and 9. Each circuit must be adjusted to a beat frequency of 460 kc.

Connect the "Ant." output of the test oscillator to the control grid of the RCA-1C6 through a .05 mfd. capacitor. Connect the test oscillator "Gnd." terminal to the ground terminal of the receiver chassis. The receiver range selector should be on the "Short wave" position. Tune the test oscillator to 460 kc. Adjust the receiver tuning control to a point where the image, when no interference or resonance effect from broadcast stations or from the harmonics are evident.

Adjust the two magnetite core screws L10 and L11 of the second i-f transformer for greatest response (peak) indicated on the output indicator. Then adjust the two magnetite core screws L8 and L9 of the first i-f transformer for maximum (peak) response as shown by the indicating device. It is advisable to repeat the adjustment of all i-f magnetite core screws to assure that the interaction between them has not disturbed the original adjustments.

R-F Adjustments

Calibrate the tuning dial by adjusting the antenna trimmer to the reference line designating and calibration mark (530 kc) on "Standard Broadcast" scale. Make the gang tuning condenser plates are in their full-mesh position. Adjust the C3 and C4 by means of a screwdriver. Repeat the adjustments at the "Wave-trap," "Standard broadcast," and "Short wave" respectively.

Wave-trap Adjustment

Attach the "Ant." output of the test oscillator to the receiver antenna terminal "A1" through a .005 mmfd. (frequency) capacitor. The ground connections remain connected together. Leave the test oscillator adjusted to 460 kc and range selector on "Short wave" position as before. Then adjust the wave-trap screw to the point which causes maximum suppression of the 460 kc signal.

"Standard Broadcast" Band

Commutator for the test oscillator remains the same as for "Wave-trap adjustment." Adjust the test oscillator to 1,500 kc and set the receiver tuning control to a dial reading of 1,500 kc with the range selector changed to "Standard broadcast" position. Leave the antenna terminal of the receiver at the standard test system. Regulate the output of the test oscillator until a slight indication is perceptible at the receiver output. Then adjust the two plunger-type air trimmers, C6 and C8, of the oscillator and antenna coils so that such produces maximum (peak) receiver output. After these adjustments have been accomplished, check the test oscillator frequency at 600 kc. Turn the receiver to pick up this signal (near 600 kc, disregarding the dial reading at which it is best received. Then, adjust the oscillator magnetite core screw L7 (top of oscillator coil) simultaneously rocking the receiver tuning control backward and forward thru the signal until maximum receiver output results from these combined operations. The adjustments at 1,500 kc should then be repeated to correct for any change which may have been caused by the 600 kc oscillator adjustment. Tighten lock nuts on C6 and C8.

"Short Wave" Band

Connect the "Ant." output of the test oscillator to the receiver antenna terminal "A1" through a .005 ohm resistor, leaving the ground connections as before. Place the receiver range selector to the "short wave" position and set the dial pointer to 20,000 kc. Adjust test oscillator to 20,000 kc. Adjust the antenna trimmer C2 to produce maximum (peak) receiver output. Two positions of this trimmer may be found which produce maximum output. The positions of minimum capacitance (plunger near out) should be used. Tighten lock nut. Adjust the antenna air trimmer C5 to produce maximum (peak) output while slightly rocking the gang tuning condenser back and forth over the signal. Two positions may be found at one manner which produce maximum output. The positions of minimum capacitance (plunger near in) should be used. Tighten lock nut. Check for image signal by changing the receiver dial setting to 19,080 kc. If the image signal is present, C5 should be readjusted, the image signal will be increased at this position. No adjustments should be made while checking for the image signal.

Phonograph Attachment

A terminal board is provided for connecting a phonograph unit to the audio amplifying unit. Typical methods of connecting a low-impedance pickup, as the RCA Victor Models R-93, R-93-2, and R-93-5 Record Players are shown on the schematic diagram (figure 1).

Loudspeaker

Connecting of the loudspeaker voice coil is made in the usual manner with three-conductor power leyden after first removing the front paper dust cover. This may be removed by unfastening its corner with a very slight application of acetone using care not to smear the acetone to face down onto the air gap. The dust cover should be cemented back in place with celluloid upon completion of adjustment.

Power Supply (Models 6BT and 6BK)

Filament voltage for these receivers is obtained from either a 2½-volt Air-cell or a 2-volt storage battery. When the Air-cell is used, the 0.44-ohm resistor R14 must be connected in series with the A- battery lead as shown on figure 8. When operating on a 2-volt storage battery, the resistor R14 should be removed. Plugs are provided on the battery cable (see figure 8) for plugging in the Air cell and B batteries. The A battery plug should be removed when operating on a 2-volt storage battery. The 7½-volt C battery is located on the top-side of the chassis and securely held in place by a metal cover (see figure 3). The four bias cells are located underneath the chassis (see figures 2 and 5).

Power Supply (Models 6BT6 and 6BK6)

The vibrator power unit supplies the necessary plate, grid, and cathode voltages for proper operation of these receivers. It contains a plug-in type vibrator, step-up transformer, and an efficient filter system. Rectification of the high voltage is accomplished by means of the synchronous vibrator. The complete unit is electrically shielded to prevent noise. The vibrator power-unit chassis should be mounted from the receiver chassis, when compared for service, to avoid vibrator hum. The vibrator must has been carefully adjusted by means of special equipment to assure good operation over an extensive period of life. No adjustments should be attempted on a vibrator suspected of being in a defective condition, but a renewal installed. The plug-in arrangement affords easy removal or replacement.

A 6-volt storage battery supplies power for the vibrator and for the tube filaments. Proper connections are required to the 6-volt battery. The + 6-volt (black) lead and the + 4-volt (blue) lead supply filament voltage to the vibrator power unit. The two 4-volt leads (blue and red) should under opposite connections to the same battery strap to avoid against vibrator hum which might otherwise result if these two leads are joined together or touch each other. The 7½-volt C battery is located on the top-side of the chassis and securely held in place by a metal cover (see figure 11). The four bias cells are located underneath the receiver chassis (see figures 2 and 5).

Resistance Measurements

The following table of resistance measurements between the base pins and the chassis was made with a Model 0 set in place, after removing the "C" battery and the tube shields. The receiver was turned on, and the set was tuned for maximum output. The volume control was turned to maximum position. All measurements were made with a Model 7 set tester, using the 1,000-ohm scale. Power was turned off before the resistance measurements were made. Tubes were removed from their sockets for these measurements.

Tube	Pin No.	Resistance (ohms)
1A4	1	0
	2	0
	3	0
	4	0
	5	0
	6	0
	7	0
1C6	1	0
	2	0
	3	0
	4	0
	5	0
	6	0
	7	0
1R6	1	0
	2	0
	3	0
	4	0
	5	0
	6	0
	7	0
30	1	0
	2	0
	3	0
	4	0
	5	0
	6	0
	7	0
49	1	0
	2	0
	3	0
	4	0
	5	0
	6	0
	7	0

Radiotron Socket Voltages

CAUTION: Do not measure the voltages on control grids of RCA-1C6 and RCA-1A4 with any voltmeter other than the instrument listed under the "Caution" under "Service data" for method of measuring these grids.

The voltage values are shown for convenience. The higher voltage values are obtained with normal line voltage (117 volts) and with the receiver operating under normal conditions. Lower voltage values may be obtained from the receiver when the line voltage is low, or from the effects of the additional loading of the voltmeter through the high resistance circuits employed.

The voltage values presented from the Radiotron socket chassis, and voltmeter, and should be in accordance with those pictured on figure 7 with tuned to broadcast station for locality operation. Such values as specified should hold within ± 20%. Since the receiver is normally operated on the usual line voltage fluctuations in excess of this limit will usually be influences of trouble in the tuner circuit.

BATTERIES REQUIRED: Models 6BT or 6BK – "A"-one plug-in 2.5-volt Air-cell (Burgess Ready A-600 or equivalent) or one 2-volt storage battery; "B" three 45-volt batteries (Burgess 2FL30B, Eveready 486 or equivalent); "C" one 7.5-volt C battery (Burgess 4F60, Eveready 770 or equivalent) and four blue cells (Stock 2N881). Models 6BT6 or 6BK6 – "A", one 6-volt storage battery; "B", none needed; "C", one 7.5-volt C battery (Burgess 4F60, Eveready 770, or equivalent) and four blue cells (Stock 2N881).

REPLACEMENT PARTS

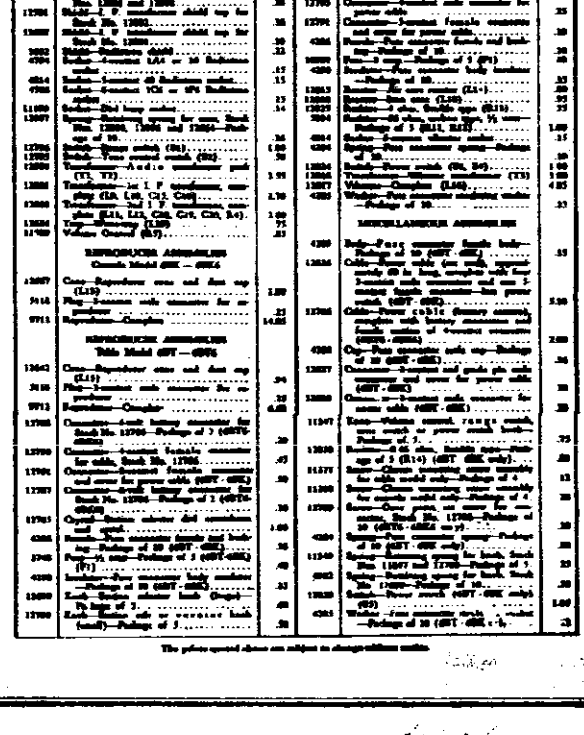

©John F. Rider, Publisher

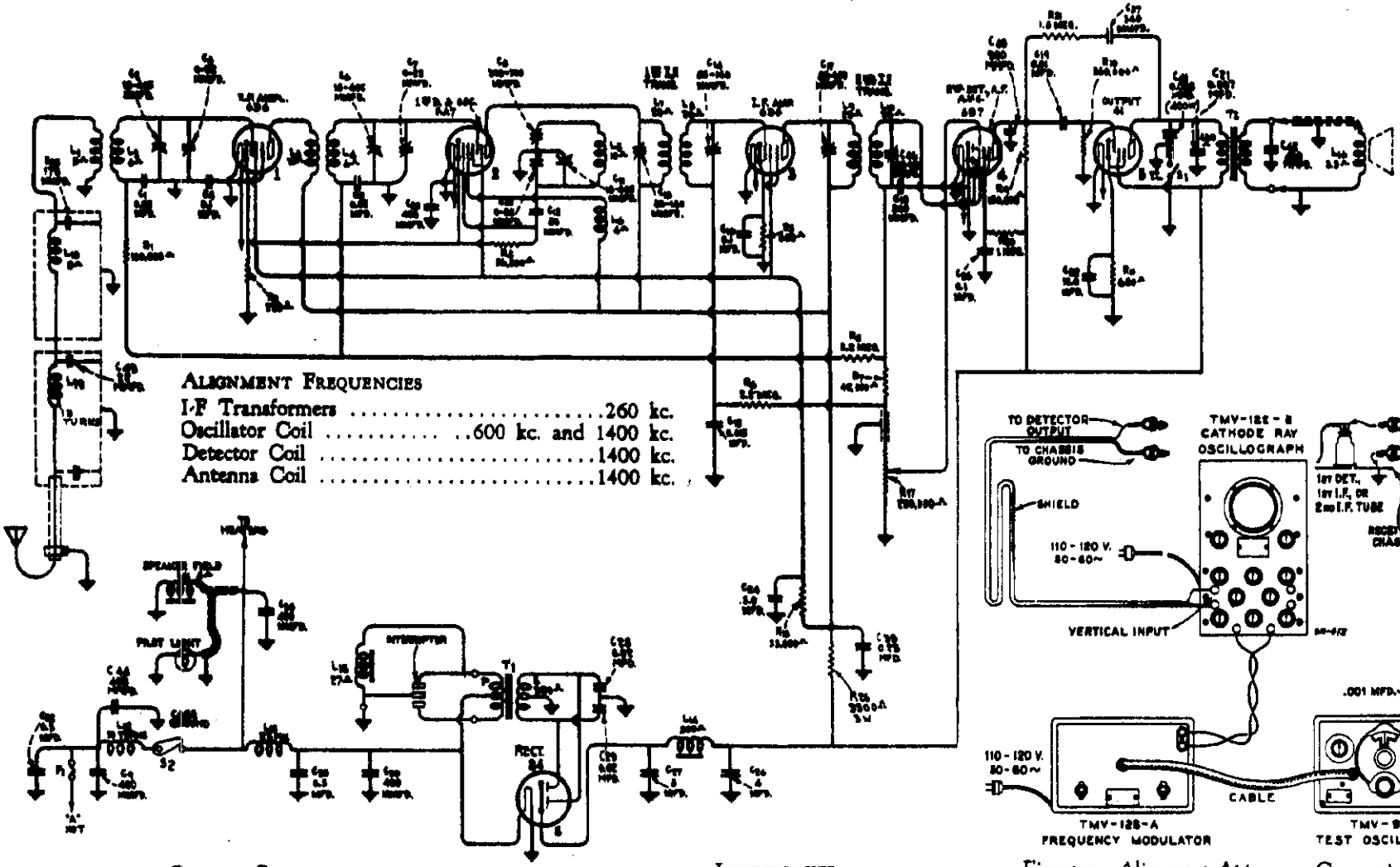

Figure 5—Alignment Apparatus Connections

OUTPUT RATING

Maximum	3.50 Watts
Undistorted	1.75 Watts

LOUDSPEAKER

Type	Electrodynamic
Impedance (v.c.)	3.4 ohms at 400 cycles

POWER RATING

Supply Voltage	6.3 Volts (Storage Battery)
Current Drain	6.55 Amperes at 6.3 Volts
Fuse Protection	15 Amperes
PILOT LAMP	Mazda No. 51, 7.5 Volts

MODEL H-6 Hudson
Chassis Wiring
Socket

RCA MFG. CO., INC.

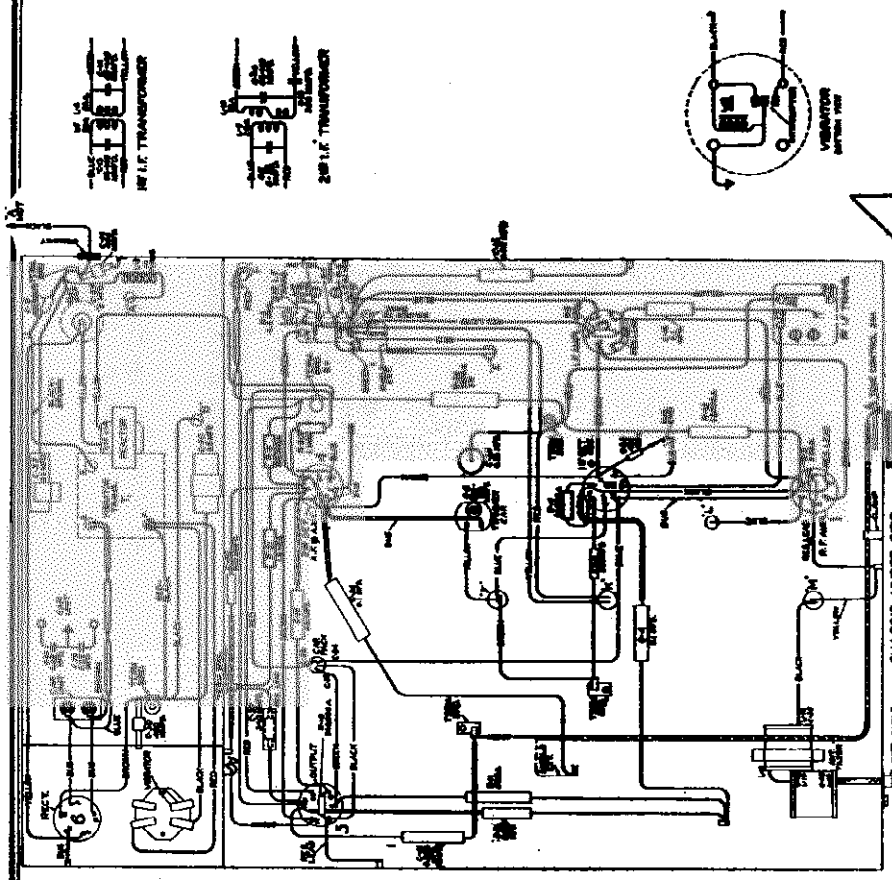

Figure 3—Chassis Wiring Diagram

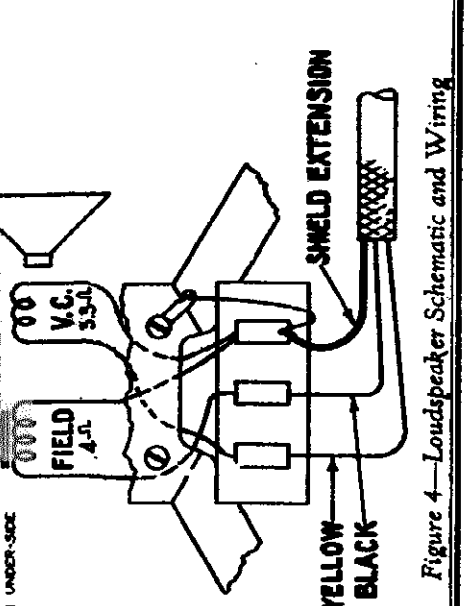

Figure 4—Loudspeaker Schematic and Wiring

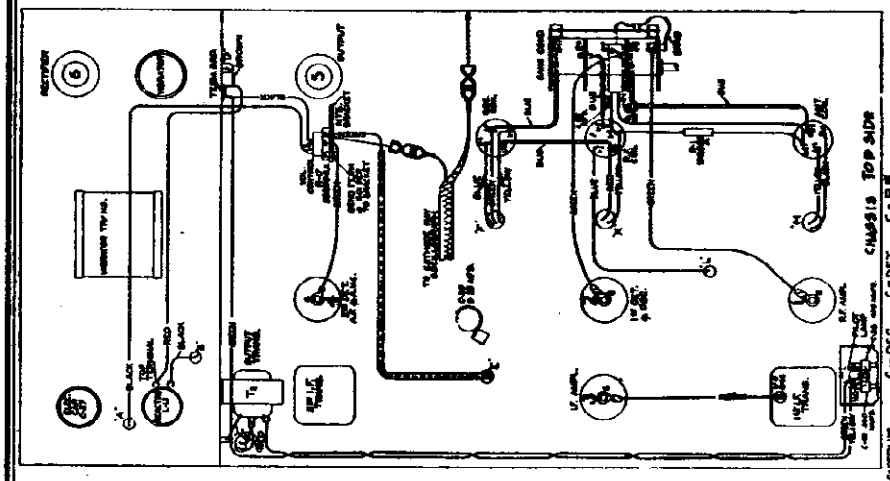

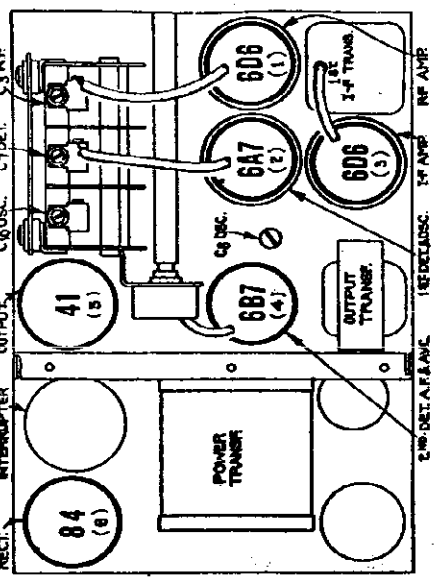

Figure 1—Radiotron Locations

RCA MFG. CO., INC.

MODEL H-6 Hudson
Circuit Data
Alignment

CIRCUIT ARRANGEMENT

The schematic and wiring layouts of the electrical circuit are shown in Figures 2 and 3, respectively. From these diagrams it may be seen that six Radiotrons are incorporated in the basic Superheterodyne circuit. In sequence, there is an r-f stage, a dual first detector-oscillator stage, a single i-f stage, a second detector-audio amplifier stage, and a particular output stage. The power supply system contains a mechanical interrupter and an RCA 84 rectifier Radiotron. The following current features are of particular importance:

Noise Filter—Reduction of ignition interference and similar noises is accomplished by a filter arrangement in the antenna circuit. The filter is a "band-pass" type, having an acceptance band between 540 kc. and 1600 kc., and sharply defined cut-off below and above these two limits. Primary to secondary capacity coupling in the first r-f transformer has been minimized to further suppress interference.

Tuned Circuits—There are seven resonant circuits in the radio frequency end of the receiver. The r-f, first detector and oscillator grid circuits are tuned by a three-gang tuning condenser. The remaining tuned circuits consist of the primary and secondary windings of the r-f transformers which are resonated by trimmers to a resonant frequency of 260 kilocycles.

Detection-A.V.C.—Detection takes place as a result of the rectifying action of the diodes of the RCA-6B7 tube and develops a current through resistors R-7 and R-17. The d-c voltage drop in the resistors R-7 and R-17 due to the detected signal is used for automatically regulating the control grid bias of the r-f and first detector stages. The amplification of these stages thus becomes dependent upon the signal's strength. This process (a.v.c.) compensates for fading signals and reduction of signals due to absence of antenna directions, resulting in more uniform volume. A smaller portion of the rectified signal in each detector is filtered from the resistors of R-7 and R-17 and carried to the control grid of the i-f stage. This voltage likewise furnishes automatic volume control.

Audio System—The audio and d-c components of the detected signal are selected from the manual volume control resistor (R-17) by its movable arm and are applied to the control grid of the RCA-6B7. The d-c applied is the grid resistance the bias as the a-f is increased and prevents overload as the volume control is advanced. By virtue of an effect of a high series resistance in the screen grid circuit, the cut-off of the operating characteristic is extended as the control grid bias is increased, thereby preventing distortion. After amplification by the 6B7, the audio signal is transmitted to the output stage and thence to the loudspeaker for final reproduction.

Power—The heaters of all tubes are supplied directly from the battery of the car through ribbonet ribbon cables in the receiver housing. High voltage d-c plate and bias supply is obtained from the six volt battery by the use of a mechanical interrupter and a tube rectifier. The interrupter is adapted for common or convertible by having its base constructed for "plug in" mounting.

Grounding—The wiring of the receiver chassis is so arranged that sensitive circuits are grounded at points predetermined by careful test. This procedure reduces noise inductions caused by interference circulating in the receiver case. Several of the circuits are grounded and grounded at a single point to further eliminate such trouble. The resistance of the chassis the receiver housing and the shielded cable has been kept as low as possible in order to minimize ignition noise.

SERVICE DATA

Regular maintenance will assure proper operation of this receiver over an extensive period of life. It should therefore receive the same routine inspection and adjustments as are accorded the mechanical and electrical systems of the car. The following service information suggests procedure to be applied in locating and remedying faults which may develop and affect the operation of the receiver.

Defects External To Receiver

Interference—Failure or deterioration of spark suppressing equipment at gas gauge, temperature indicator, and generator will all at the receiver interference produced at such points to be radiated and picked up by the receiver. Defects in the ignition system may only affect operation of the car but also cause interference to itself. The system should therefore be thoroughly checked and repaired if necessary. The three point of bonding fingers attached to the floor boards which connect the transmission control cover, and the bonding strap from muffler front bracket to chassis frame side member for noise reduction, may develop loose connections and cause intermittent noise trouble at the receiver. In checking the receiver for noisy operation, it is advisable to make sure that interference is not being caused by disturbing electrical devices which are not part of but are in vicinity of the car.

Battery—Corroded terminals at the storage battery will usually result in low voltage at the receiver and consequent loss in receiver. Noise may also be generated by this condition. Battery conditions will be reflected in the motor operation, as well as that of the radio.

Antenna—Vibration may occasionally cause the antenna connections to become loose or broken. These should be carefully checked and repaired if necessary. Corrosion due to weather is also deleterious at these points. Each connection should be thoroughly cleaned to assure solid contact at all times. The grounding point of the antenna lead should be at the front, left, shielding board bracket. This point of connection should not be changed, since its position on the car is very critical in regard to interference. The grounding connection to the case of the receiver should be kept as short as possible. Connection to the frame of the car at any other point, however, may cause intermittent operation of the receiver, loss of sensitivity or will produce noisy reception.

Defects Within Receiver

Initial Inspection—Failure to operate may be due to one or more causes. When a receiver is found in such condition, its parts should be checked as follows:

(a) **Fuse**—May be burned out or making poor contact. In case of burn-out, replace with a fuse of equivalent rating. If second fuse fails, remove receiver from car and investigate condition of interrupter and receiver circuits.

(b) **Tubes**—Disconnect the receiver and remove top cover. Check to see that all tubes are correctly placed in their proper sockets. One or more tubes may be defective. To determine this condition, remove them from the receiver and test with standard tube-testing equipment. If such equipment is unavailable, substitute the tubes with others known to be in good condition. It is not advisable to test the tubes while in the receiver due to measurement errors which would result from the associated circuits.

(c) **Interrupter**—Improper operation of the power supply interrupter is usually evidenced by reception of "sputtering noise." To check, remove the antenna connection and advance the receiver volume control (engine off). An increase in noise will usually indicate that the interrupter is in poor condition. Further investigation should be made by substitution of the interrupter with one known to be in good condition. No adjustments should be attempted on this unit. The operation of the interrupter and the associated vibrator circuit may be viewed normally by removal of the inner cover, which should then be replaced to prevent [illegible] Contacts are indicated by [illegible]

(d) [illegible] Failure within the basic circuits of the receiver may be indicated by symptomatic conditions. The receiver and speaker should be removed from the car and placed where they will be free from vibration. Connections of the loudspeaker to the receiver housing should be removed. Examination must be made to ascertain the condition of the speaker voice coil and field windings as well as that of the cable interconnecting the receiver and speaker. Battery and ground leads are applied to the receiver, and the speaker connected to the receiver. Voltage measurements are made at the various terminals on the power system to ascertain the presence of the proper voltages. Resistance measurements of the filter circuits, indicated in the schematic diagram, Figure 2, should be made to ascertain the presence of "shorts" or "opens" in the circuits. Interrupter and vibrator contacts should be examined for proper adjustment and cleanliness. Figure 6 gives the voltages which should be obtained on a receiver in normal operating condition. Deviations from these values of more than as much as ± 20% in the case of the receiver is appreciably affected. The absence or erratic reading of one or more of the voltages will indicate a fault in the particular circuit under test; in which case, each transformer, resistor, capacitor, choke and conductor of the circuit should be individually checked for open circuit, short circuit and grounding. Reference to the diagram Figure 7 will give the values of the circuit elements and their schematic relations. Figure 3 illustrates the physical locations of the parts and the color coding of the wiring. Defective parts should be removed only with genuine factory [illegible]

Intermittent Operation—Intermittent operation may sometimes be traced to the defective operation of the sockets of such intermittent operation is due to a defective tube, it is usually possible to [illegible] within a tube. [illegible] definite method of tracing [illegible] A connection which is discovered by regular test methods. [illegible] of the complete system of wiring should be carefully inspected and checked to assure that it is secure. Intermittent or disturbed reception may occasionally be caused by a partially defective resistor, capacitor, or winding. This type of defect is difficult to isolate however, the suspected parts should be carefully checked for proper value, leakage, shorted turns, etc. Should it be impossible to locate the fault by such a method, the receiver should be placed in operation and allowed to operate at full volume for several hours. The weakened or defective part will generally fail completely under such condition and its identification can be established by the regular continuity or voltage tests.

Alignment Procedure

There are a total of eight trimmer adjustments provided. Four of these are involved with the i-f system and the remainder are associated with the antenna, oscillator and first detector coils. They are precisely adjusted at the factory to give the correct performance. Their settings should remain intact indefinitely when the receiver is used under ordinary conditions, however, necessary for re-adjustments may occasionally occur from continued extremes of climate, tampering, purported alteration for service purposes, or after repairs have been made to the r-f or i-f tuned circuits. Improper alignment usually causes the receiver to be insensitive, non-selective, and subnormal in respect to tone quality. Such indications will usually exist simultaneously.

In re-adjusting the trimmers to their normal settings, it is important to apply a definite procedure and to use adequate and reliable test equipment. A standard test oscillator such as the RCA Stock No. 9595, will be required as the source of signal at the specified alignment frequencies. Means for indication of the receiver output during alignment is also necessary to accurately show when the correct point of adjustment is reached. Two such alignment methods are applicable. One requires use of Cathode-Ray Oscillograph equipment and the other requires a voltmeter or glow type of indicator. The Cathode-Ray alignment method is advantageous in that the indication provided is in the form of a wave image which represents the resonance characteristics of the circuits being tuned. This type of alignment is possible through use of apparatus such as the RCA Stock No. 9598 Frequency Modulator and the RCA Stock No. 9545 Cathode Ray Oscillograph. Alignment by the output meter method should be indicated by an instrument such as the RCA Stock No. 4317 Neon Glow Indicator. The two procedures are outlined as follows:

OUTPUT METER ALIGNMENT

Place the receiver in operation with its two covers removed. Attach the output indicator across the loudspeaker voice coil circuit or across the output transformer primary. Advance the receiver volume control to its maximum position, letting it remain in such position for all adjustments. For each trimming operation, regulate the test Oscillator output control so that the signal level is as low as possible and still discernible at the receiver output. Use of such small signal will obviate broadness of tuning which would otherwise result from a.v.c. action on a stronger one.

I-F Adjustments

(a) **Connect the output of the test Oscillator between the control grid cap of the i-f tube (RCA-6D6) and chassis ground. Adjust the frequency of the Oscillator to 260 kc. Tune the receiver to a point where no interference is received from the heterodyne oscillator or local stations.**

(b) **Adjust the trimmers, C-46 and C-17, of the second i-f transformer so that each produces maximum (peak) receiver output as shown by the indicating device.**

(c) **Remove the Oscillator from the i-f tube input and connect it between the control grid cap of the first detector tube (RCA-6A7) and chassis ground. Allow its tuning to remain at 260 kc. Tune the receiver to await interference as in (a).**

(d) **Adjust the trimmers, C-14 and C-13, of the first i-f transformer for maximum (peak) receiver output. The indication for this adjustment will be found due to the "flat-top" characteristic of the i-f system. The two trimmers, C-14 and C-13, should, therefore, be very carefully aligned so that the indicator remains fixed at maximum as the Oscillator is shifted through a range 2 kc. above and below its nominal setting of 260 kc. An irregular double peaked indication is to be avoided.**

R-F Adjustments

(a) Check the calibration of the dial scale of the remote control unit by rotating the tuning control until the variable condenser plates are in full mesh (maximum capacity). This will carry the dial pointer to its minimum frequency position. The knurled shaft at the rear of the control box should then be turned until the dial pointer sets exactly on the last graduation at the low frequency end of the dial scale.

(b) Connect the output of the test Oscillator to the antenna-ground terminals of the receiver with a 100 mmfd capacitor in series with the antenna lead. Tune the Oscillator to **1400 kc.** Allow the Output Indicator to remain attached to the receiver output.

(c) Tune the receiver so that the dial reading is **1400 kc.** Then adjust the oscillator, detector and antenna coil trimmers, C-10, C-7 and C-3 respectively, tuning each to the point producing **maximum** indicated receiver output.

(d) Shift the Oscillator frequency to **600 kc.** and tune the receiver to pick up this signal, disregarding the dial reading at which it is first received. The oscillator **series trimmer, C-8,** should then be adjusted, **simultaneously** rocking the receiver tuning control backward and forward through the signal until **maximum (peak)** receiver output results from the combined operations. The adjustment of C-10 should be repeated as in (c) to correct for any change in its alignment due to the adjustment of C-8.

CATHODE-RAY ALIGNMENT

Place the receiver in operation with its two covers removed. Attach the Cathode-Ray Oscillograph vertical input terminals to the second detector output, with the "Hi" connected to the high side of the volume control potentiometer and the "O" connected to the receiver chassis. Advance the vertical **amplifier gain** control of the Oscillograph to full-on, **allowing it to** remain at such position for all adjustments. Turn the vertical "A" amplifier to "On". Set the Oscillograph power switch to "On" and **adjust the intensity** and focusing controls to give a sharply defined spot on the screen. Interconnect the Frequency Modulator **impulse** generator terminals to the Oscillograph "Ext. Sync." terminals as shown by Figure 5.

I-F Adjustments

(a) **Connect the output of the test Oscillator between the control grid cap of the i-f tube (RCA-6D6) and chassis ground. Tune the Oscillator to 175 kc., place its modulation switch to "On" and its output range switch to "Hi". The Frequency Modulator must not be connected to the Oscillator for the preliminary adjustments.**

(b) **Set the Cathode-Ray Oscillograph horizontal "B" amplifier to "Tuning" and the synchronizing switch (tuning) to "Int". Place the synchronizing input and frequency controls to about their mid-positions. Turn the range switch to its No. 1 position.**

(c) Increase the output of the Oscillator until a deflection is noticeable on the Oscillograph screen. The figure obtained represents several waves of the detected signal, the amplitude of which may be observed as an indication of output. Cause the wave image formed (400 cycle waves) to be spread completely across the screen by advancing the horizontal "B" gain control. The image should be synchronized and made to remain motionless by adjustment of the synchronizing input and frequency controls.

(d) Adjust trimmers C-46 and C-17 of the second i-f transformer to produce maximum vertical deflection of the oscillographic wave which is present on the screen. The adjustment places the transformer in exact resonance with the 260 kc. signal.

(e) The sweeping operation should follow, using the Frequency Modulator. Shift the Oscillograph **synchronizing switch** to "Ext", change its range switch to No. 2 position and set the frequency control to its mid-position. Place the Frequency Modulator in operation with its sweep range switch in the "Lo" position. Interconnect the test Oscillator and Frequency Modulator with the special shielded patch cord provided. Turn the Oscillator **modulation switch** to "Off".

(f) Increase the frequency of the test Oscillator by slowly turning its tuning control until two separate, distinct and similar waves appear on the screen. These waves will be identical in shape but will be totally disconnected and appearing in reversed positions. They will have a common base line which is discontinuous. Adjust the frequency and synchronizing input controls of the Oscillograph to get the proper waves and to make them remain motionless on the screen. Continue increasing the Oscillator frequency until the forward and reverse curves move together and overlap with their highest points exactly coincident. This condition will obtain at an Oscillator setting of approximately 280 kc.

(g) With the images established as in (f), retune the second i-f trimmers, C-46 and C-17, so that they cause the curves on the Oscillograph screen to become exactly coincident throughout their lengths and have maximum amplitude.

(h) Without altering the adjustments of the apparatus, **shift** the output connections of the Oscillator to the input of the i-f system, i.e., between the first detector (RCA-6A7) control grid and ground. Regulate its output so that the amplitude of the oscillographic image is approximately the same as used above for adjustment (g) of the second i-f transformer.

(i) The first i-f transformer trimmers, C-14 and C-13, should then be adjusted so that they cause the forward and reverse curves to become coincident throughout their lengths and have maximum amplitude. The composite wave obtained in this manner represents the resonance characteristic of the total i-f system. Lack of symmetry or irregularity of the resultant image will indicate the presence of a defect in the i-f system.

R-F Adjustments

(a) Calibrate the scale of the receiver by rotating the tuning control until the variable condenser is at full mesh, and then turning the knurled shaft at the rear of the control box to bring the dial pointer to the last graduation at the low frequency end of the scale.

(b) Attach the output of the test Oscillator to the receiver input, i.e., between the antenna and ground terminals with a 100 mmfd. capacitor in series with antenna lead. Accurately tune the Oscillator to **1400** kc. The Oscillograph should be left connected to the second detector output circuit for the above adjustments. Return the synchronizing switch to its "Int" position and turn the range switch to its No. 1 position.

(c) Tune the receiver to a dial reading of **1400** kc. Then regulate the Oscillator output so as to increase the amplitude of the waves on the Oscillograph screen to a conveniently observable size. The several waves of detected signal, as appearing on the screen, should be synchronized by operation of the synchronizing and frequency controls. Trimmers, C-10, C-7 and C-3, of the oscillator, detector and antenna coils should then be adjusted so that each causes maximum vertical deflection (amplitude) of the images.

(d) The Oscillator modulation should then be turned to "Off" and the Frequency Modulator placed in operation connected to the Oscillator with the shielded patch cord. Change the Oscillograph synchronizing switch to "Ext", set its range switch to its No. 2 position and the frequency control slightly above its mid-position.

(e) Increase the frequency of the test Oscillator gradually, until the point is reached where the two similar, distinct and separate wave images appear on the screen and become coincident at their highest points. This will occur at an Oscillator setting of approximately 1500 kc. These waves should be synchronized on the Oscillograph screen by careful re-adjustment of the synchronizing and frequency controls. Re-adjust trimmers C-10, C-7 and C-3 to produce complete coincidence at maximum amplitude of the two waves.

(f) Disconnect the Frequency Modulator from the Oscillator. Switch the modulation switch of the Oscillator to "On" and tune the Oscillator to **600** kc. Set the synchronizing switch of the Oscillograph to "Int" and turn the range switch to No. 1 position.

(g) Tune the receiver station selector control so as to pick up the **600** kc. signal, disregarding the dial reading at which it is best received.

(h) Change the Oscillograph synchronizing switch to "Ext", and place the Oscillator modulation switch to "Off". Interconnect the Frequency Modulator and Oscillator with the special shielded patch cord. Return the range control of the Oscillograph to its No. 2 position and set the frequency control slightly above its mid-position.

(i) Shift the test Oscillator to its **200-400** kc. range and tune it to the point at which the forward and reverse waves show on the Oscillograph screen. This condition will obtain at an Oscillator setting of approximately 230 kc. The signal obtained from the Oscillator for this adjustment will be the third harmonic of the 200 kc. An increase in the Oscillator output may be necessary. The trimmer C-8 should then be adjusted to the point which produces maximum amplitude of the oscillographic images. It will not be necessary to rock the tuning control for this adjustment, inasmuch as the Frequency Modulator is varying the signal in an equivalent manner.

(j) Retouch trimmers C-10, C-7 and C-3 as in (c), (d) and (e) to correct for any change in high frequency alignment which may have been caused by the adjustment of C-8.

Tuning Condenser Drive

Smooth control should be obtained over the entire tuning range of the variable condenser. If irregularity is present, check the action of the gear mechanism for binding or backlash at every point within the tuning range. A bind may be due to improper mesh between the small pinion gear and the large gears on the condenser shaft. To correct such a condition, remove the insulating coupling on the pinion of the tuning gear, loosen the two screws holding the gear plate and adjust the mesh of the gears to a position which gives smooth operation.

Gear backlash is prevented by the small compression spring between the two large gears on the rotor shaft. To check for this backlash, rotate the pinion slowly in both directions, observing the free gear (on rotor shaft) carefully to determine if it shifts without turning the gear. If backlash is apparent, the large gear assembly should be removed and the free gear moved (against spring compression) 2 to 3½ teeth in relation to the fixed gear, and the assembly slid in place on the shaft and in mesh with the pinion. The set screws holding the large gears should be securely tightened.

Interrupter

The mechanical interrupter used in combination with a tube rectifier in the power system is constructed with a plug-in base so as to be easily removed from the receiver. Its adjustments have been correctly set during manufacture by means of special equipment. In cases of faulty operation of the interrupter, a renewal should be made.

MODEL H-6 Hudson
Voltage, Parts
Installation

RCA MFG. CO., INC.

Radiotron

Determination of tubes and their approach to failure is usually evidenced by noisy or intermittent operation, loss of sensitivity and distorted tone quality. When suspected as faulty, the tubes should be removed from the receiver and checked with standard tube testing apparatus. It is not feasible to test the tubes while in the receiver due to measurement inaccuracies which would result from the effects of the circuits.

A "jaunt" formed with a strong cord will be found helpful in removing the tubes from their sockets. The loop in the cord should be placed over the tube and tightened around the tube base. A direct pull upward will disengage the tube.

Circuit Voltages

The voltages indicated at the socket contacts on Page 7-6 will serve to assist in analyzing defective circuit conditions. Each value as specified should hold within ± 20%, when the receiver is noiselessly operated at rated supply voltage. They are actual operating values and do not take into account measurement inaccuracies which may be due to the loading effect of a voltmeter's internal resistance. For the majority of readings a meter having an internal resistance of 1000 ohms per volt will be satisfactory when the range used for each check is chosen as high as possible, consistent with good read ability. The amount of circuit resistance shunting the meter during measurement will determine the accuracy to be obtained, the error increasing as the meter resistance becomes comparable to or less than the circuit resistance.

Receiver Mounting

The screws holding the receiver chassis to the case and those securing the receiver mount all be in place and tightly installed, inasmuch as they appreciably affect the ground resistance of the assembly and will consequently have a bearing on the amount of ignition noise received.

REPLACEMENT PARTS

Prices subject to change without notice.

Number	Description
	RECEIVER ASSEMBLIES
BO 171313	Band—Tube shield rubber band—Package of 3
BO 171314	Cable—Antenna cable—Receiver and Cowl—Antenna shield (shielded) cable
BO 171315	Capacitor—Antenna trimmer—C6
BO 171316	Capacitor—60 Mmfd —C11
BO 171317	Capacitor—480 Mmfd —C9, C50, C51, C52, C62, C64
BO 171318	Capacitor—500 Mmfd —C57
BO 171319	Capacitor—390 Mmfd —C60
BO 171320	Capacitor—007 Mfd —C51
BO 171321	Capacitor—01 Mfd —C49
BO 171322	Capacitor—017 Mfd —C15
BO 171323	Capacitor—.05 Mfd —C28, C29
BO 171324	Capacitor—.031 Mfd—C61
BO 171325	Capacitor—.09—.01 Mfd—C1, C3
BO 171326	Capacitor—.01 Mfd —C4, C16
BO 171327	Capacitor—.01 Mfd —C46
BO 171328	Capacitor—[illegible] —C59
BO 171329	Capacitor—[illegible]
BO 171330	Capacitor—[illegible]
BO 171331	Capacitor—[illegible]
BO 171332	Capacitor—[illegible]
	—C21, C24, C26
BO 171333	Coil—Volume (Q-tuned cap) chg—
BO 171334	Coil—Antenna coil—L1, L2
BO 171335	Coil—Choke coil—L11
BO 171336	Coil—Oscillator coil—L7, L8
BO 171337	Coil—R.F. coil—L5, L6
BO 171338	Condenser—3 gang variable tuning condenser—C4, C5, C6, C7, C10, C11
BO 171339	Coupling—Tuning condenser drive coupling—Short
BO 171340	Coupling—Volume control drive coupling—Long
BO 171341	Filter—Antenna filter—L18, L19, C55, C63
BO 171342	Gear—Variable condenser drive gear—Located on condenser shaft and meshes with pinion (Item 171431)
BO 171343	Lead—Lead assembly "A" plus lead shown one
BO 171344	Pinion—Variable condenser drive pinion meshes with gear—Stock 171424
BO 171345	Plug—Bracket and receiver plug mounted
BO 171346	Resistor—Filter resistor—L15
BO 171347	Resistor—Filter resistor—L15
BO 171348	Resistor—250 ohms—Carbon type ½ watt (R21) Package of 1
BO 171349	Resistor—400 ohms—Carbon type—½ watt (R5) Package of 1
BO 171350	Resistor—480 ohms—Carbon type—½ watt (R11) Package of 1
BO 171351	Resistor—1500 ohms—Carbon type ½ watt (R26)
BO 171352	Resistor—15,000 ohms—Carbon type ½ watt (R13) Package of 1
BO 171353	Resistor—47,000 ohms—Carbon type ½ watt—R7—Package of 1
BO 171354	Resistor—68,000 ohms—Carbon type ½ watt (R4) Package of 1
BO 171355	Resistor—100,000 ohms—Carbon type ½ watt (R1) Package of 1
BO 171356	Resistor—250,000 ohms—Carbon type ½ watt (R9) Package of 1
BO 171357	Rod—Tuning condenser shaft extension rod
BO 171358	Screw—Tuning condenser shaft set screw
BO 171359	Vibrator complete—L13
	REPRODUCER ASSEMBLIES
BO 171362	Cable—Reproducer cable
BO 171363	Coil—Field coil—L12
BO 171364	Cone—Reproducer cone—L14
BO 171365	Housing—Reproducer housing cone plate—Less speaker
BO 171366	Reproducer complete
BO 171367	Seal—Reproducer mounting seal to baffle—Compression—1 steel, 1 cork, 1 leather-steel and 2 felt washers
	MISCELLANEOUS ASSEMBLIES
BO 171402	Connector—Oil gauge connector
BO 171403	Connector—Temperature gauge connector
BO 171405	Connector—6 V field generator or ammeter connector
BO 171396	Connector—Fuse connector complete

Number	Description
BO 171376	Resistor—500,000 ohms—Carbon type—½ watt (R10) Package of 1
BO 171377	Resistor—5 Megohm—Carbon type—½ watt (R8) Package of 1
BO 171378	Resistor—2.5 Megohm—Carbon type—½ watt (R6) Package of 1
BO 171379	Resistor—3.5 Megohm—Carbon type—½ watt (R2) Package of 1
BO 171380	Shaft—Antenna, R.F. or oscillator coil shield
BO 171381	Shield—Antenna, R.F. or oscillator coil shield
BO 171364	Shield—Radiotron shield (long) Less cap
BO 171369	Shield—Radiotron shield (short) Less cap
BO 171366	Socket—1 contact chassis socket
BO 171367	Socket—7 contact Radiotron socket
BO 171368	Socket—7 contact Radiotron socket
BO 171365	Socket—7 contact Radiotron socket
BO 171363	Shield—Antenna, R.F. or oscillator coil shield
BO 171364	Shield—Radiotron shield (long) Less cap
BO 171369	Shield—Radiotron shield (short) Less cap
BO 171366	Socket—1 contact chassis socket
BO 171367	Socket—7 contact Radiotron socket
BO 171368	Socket—7 contact Radiotron socket
BO 171365	Socket—7 contact Radiotron socket
BO 171370	Transformer—Power transformer (T)
BO 171372	Transformer—Input transformer (T)
BO 171373	Transformer—Output transformer (T2)
BO 171374	Transformer—Output transformer—(T1)
BO 171379	Transformer—Vibrator transformer (T1)
BO 171376	Volume control—(R17, R5)
	CONTROL HEAD AND FLEXIBLE SHAFT ASSEMBLIES
BO 171377	Bezel—Station selector dial bezel
BO 171378	Cover—Control head rear cover
BO 171379	Driven—Station selector dial spindle
BO 171380	Dial—Tuning dial and knobless
BO 171381	Escutcheon—Tuning dial escutcheon and gear assembly
BO 171382	Gear—Station selector dial gear
BO 171383	Gear—Tuning dial gear assembly
BO 171384	Knob—Control knob—Package of 2
BO 171385	Knob—Tuning control knob—Package of 2
BO 171386	Lamp—Dial lamp
BO 171387	Shaft—Station selector dial control shaft
BO 171388	Shaft—Tuning condenser flexible drive shaft assembly
BO 171389	Shaft—Volume control flexible drive shaft assembly
BO 171390	Shaft and gear—Tuning dial counter assembly
BO 171391	Spring—Volume or tone control detent locking spring—Package of 10
BO 171392	Washer—Tuning dial counter shaft spring retainer washer—Package of 10
BO 171393	Bezel—Tuning control bezel—Package of 1
BO 171394	Knob—Tone control knob—Package of 1
BO 171395	Knob—Tuning control knob—Package of 1
BO 171396	Lamp—"A" lamp and bracket mounted on lens complete with clip—Assembled ready for lamp
BO 171397	Suppressor—Distributor suppressor
BO 171398	Assembly of Lead-In Wire Assembly Lead-In Wire and Shielding Loom Assembly
BO 171399	Antenna Rod
BO 171400	Antenna Spring Clip
BO 171401	Cowl to Wire Clip Bolt
BO 171402	Cowl to Wire Clip Bolt Nut
BO 171403	Ground Strap Assy. (Includes Bracket to Plate)
BO 171404	Ground Fork (Yellow, opening Plate Clamp)
BO 171405	Ground Fork Spacer
BO 171406	Ground Fork Screw
BO 171407	Ground Fork Tapping Plate

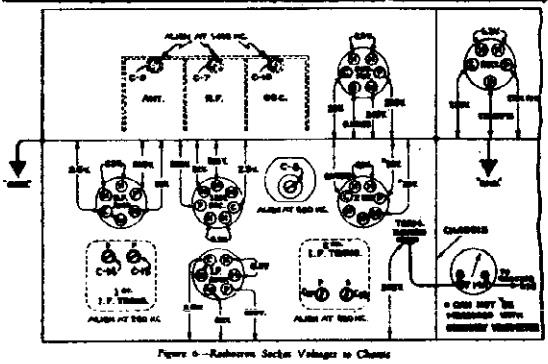

Figure 6.—Receiver Socket Voltages to Chassis

(Measured at 6.3 volts battery supply—Volume Control Maximum—No Signal)

Radio Installation-Operation

1—Lift floor mat and install three grommet forks (Part No. 171210) to front, rear and left of floor board opening to that spring fingers contact transmission control housing. (See Insert EE.) The paint must be removed from the floor panel and transmission tower to provide good electrical contact. A spacer (Part No. 151435) should be placed under each grommet fork and the parts secured to the floor board with two sheet metal screws (Part No. 71648) and three tapping plates (Part No. 151436).

2—Remove finish plate from center of instrument panel—attached with studs and nuts on back of panel.

3—Put the Radio Receiver in place on top of the steering column support bracket with the control shaft connections E and F on the right, and secure with two cap screws "A." On right-hand drive models, the receiver is mounted with the control shaft connections to the left. NOTE: There are three threaded holes in the bottom of the receiver as that it can be mounted in 1934 and 1935 models as well as 1936.

4—Punch a hole through the front dash pad, using the 1/8" hole located just above the center of the dash reinforcement rim as a guide.

5—Place wooden spacer on speaker mounting stud and insert stud through hole in dash and dash pad, securing with a washer and nut on the engine side of dash.

6—Remove the control knobs from the control head, and also the nuts located behind the knobs. Insert control head from back of panel, securing by replacing nuts, and then replace control knobs.

7—Insert the driving tongue of the control cable from the right (tuning) knob into the rear (front on right-hand drive) socket F and tighten nut and the driving tongue of the control cable from the left (volume) knob into the forward (rear on right-hand drive) socket and tighten nut. NOTE: On right-hand drive installations the long control cable should be attached to the volume (left) control knob.

8—Insert speaker lead plug "J" into case. The plug has three prongs, unequally spaced—be sure they are aligned with the sockets in the case.

9—Insert pilot light in control head.

10—Attach feed wire to Battery Terminal of the ignition lock "N" and connect to socket "M," being sure that fuse is in place in socket.

11—Lay out antenna on floor under car with lead-in end at front of left running board. Remove all rust and kinks. Attach hook at lead-in to front hole in right running board, continuing back and forth until all but the last hook has been put in place. Start at the right front and work backward, drawing the antenna wire tight to take up slack and permit the last hook to be attached to the right running board.

Insert the lead-in through the hole in body floor panel at kick with left front door, front pillar post, reaching up behind kick panel behind radio receiver and connect to socket "L."

12—Attach one small condenser on gasoline tank gauge unit with one unit mounting screw, attaching condenser terminal to gauge unit terminal. (Insert "DD")

13—Attach one small condenser to upper rear cap screw in engine water manifold and attach condenser terminal to terminal of water temperature gauge element. (Insert "CC"). NOTE: This condenser not required on Terraplane models.

14—Attach large condenser to cap screw at rear of generator and connect condenser terminal to generator battery terminal. (Insert "AA")

15—Install 48765 ground strap from the front muffler bracket to chassis frame. The paint must be removed from points of attachment to insure good electrical contact.

16—Install suppressor in central terminal of distributor.

17—When installing radio on Terraplane Special models with air cooled generator, current generator charge regulator in place of relay with two screws in two threaded holes in dash provided for the purpose. Fuse cap bar should be on upper face between ground cap from generator "F" terminal. See illustration inserts for wiring diagram. Connect "F" terminal on side of charge regulator to "F" terminal (engine side) of generator. Adjust generator output to 22 amps cold—17 amps. warm.

18—When installing radio on Terraplane Special models with air cooled generator, current generator charge regulator in place of relay with two screws in two threaded holes in dash provided for the purpose. Fuse cap bar should be on upper face between ground cap from generator "F" terminal. See illustration inserts for wiring diagram. Connect "F" terminal on side of charge regulator to "F" terminal (engine side) of generator. Adjust generator output to 22 amps cold—17 amps. warm.

19—Turn on volume and tone set to a known local station. Adjust the dial board to give correct dial reading by turning knurled knob on back of control head.

Radio Kit—1936—Hudson and Terraplane

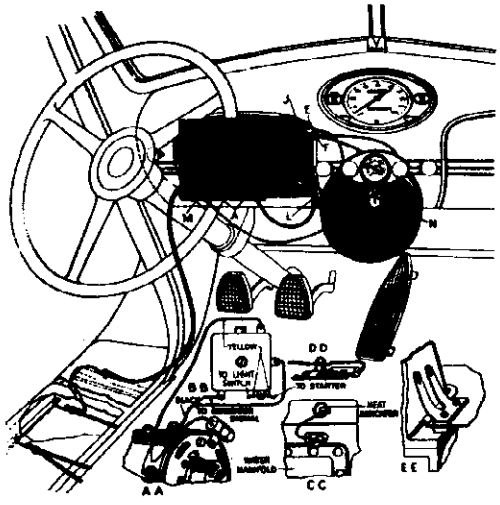

Figure A—Mounting Details and Connections

The Radio Kit, Part No. 47766 includes:

1—Receiver Complete
1—Speaker Complete
1—Control Head complete with cables
1—Pilot Light Bulb
1—Push Cable Assembly and Parts
1—Aerial Assembly
1—Aerial Lead In with shield and clip
1—Hardware Suppressor
3—Metal Condensers (one mounted on Terraplane Battery Terminal)
1—Large Condenser
1—Grommet Strap
3—Grommet Forks
Bolts, Nuts, Screws and Lock Washers for mounting units

In order to complete the assembly on a Terraplane Delayed Ignition Charge Control (Part No. 47779), is required in addition to the Radio Kit

©John F. Rider, Publisher

RCA MFG. CO., INC.

MODELS 6T,6K
Schematic
Chassis Wiring

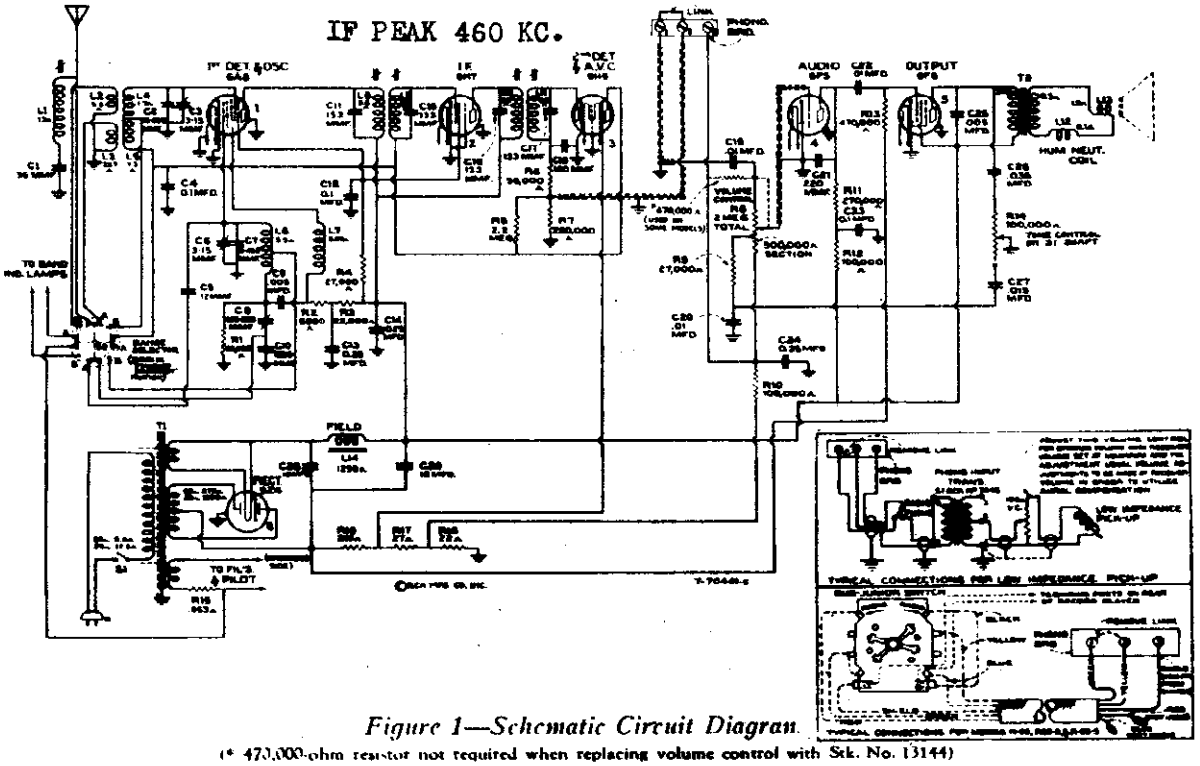

Figure 1—Schematic Circuit Diagram

(* 470,000-ohm resistor not required when replacing volume control with Stk. No. 13144)

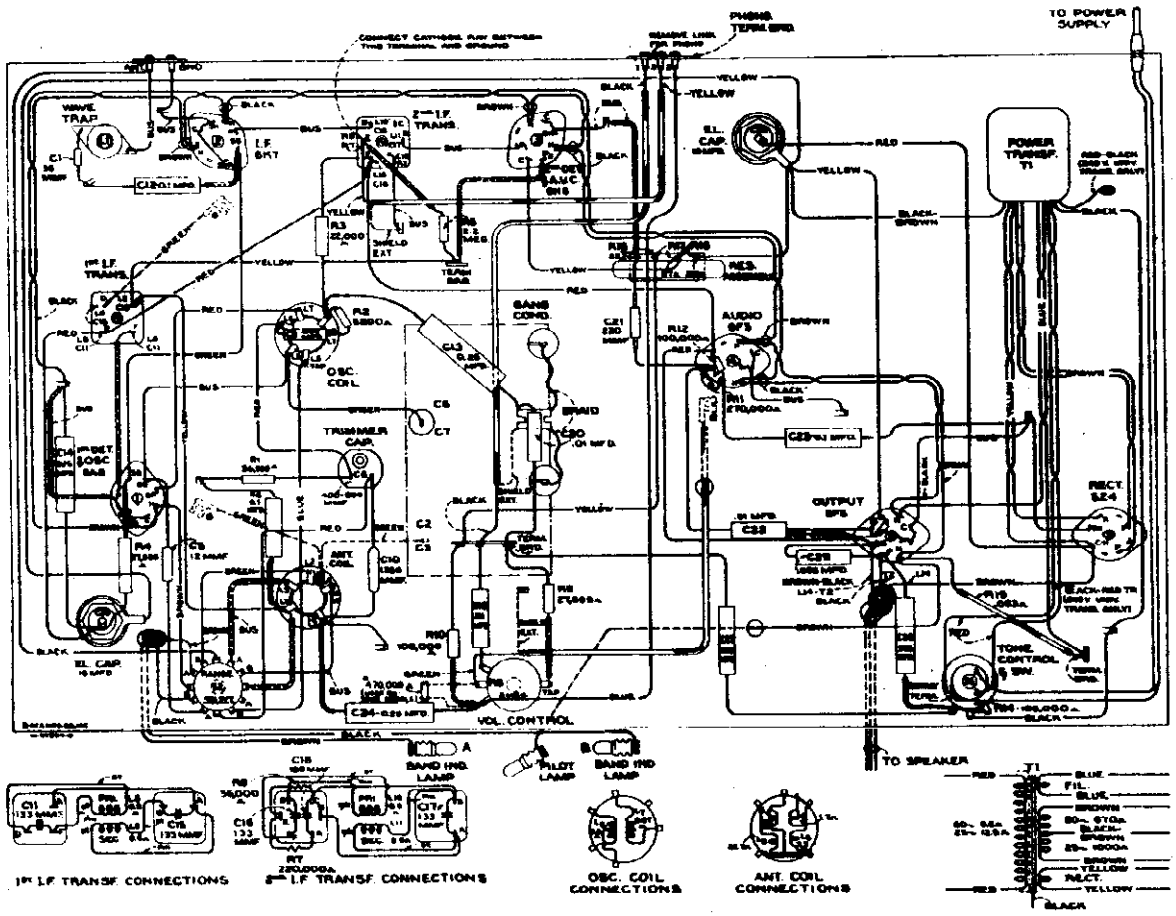

Figure 2—Chassis Wiring Diagram

©John F. Rider, Publisher

MODELS 6T,6K
Socket,Trimmers
Resistance,Data

RCA MFG. CO., INC.

Electrical Specifications

FREQUENCY RANGES
"Standard broadcast" (A)..... 540-1,820 kc.
"Short wave" (B).....1,820-6,600 kc.

ALIGNMENT FREQUENCIES
"Standard broadcast" (A).....
600 kc. (osc.), 1,700 kc. (osc., ant.)
"Short wave" (B).....None required

Intermediate Frequency.....460 kc.

RADIOTRON COMPLEMENT
(1) RCA-6A8.....First Det.—Oscillator
(2) RCA-6K7.....Intermediate Amplifier
(3) RCA-6H6.....Second Det.—A.V.C.
(4) RCA-6F5.....Audio Voltage Amplifier
(5) RCA-6F6.....Power Output
(6) RCA-5Z4.....Full-wave Rectifier

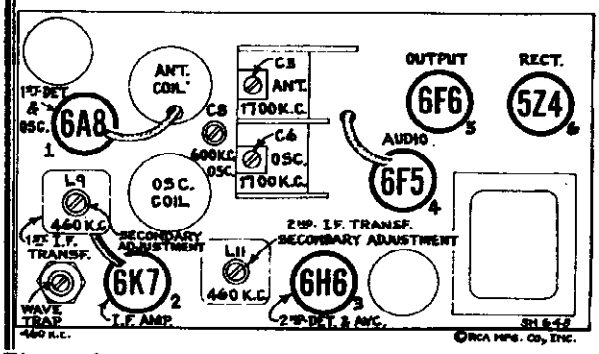

Figure 3—Radiotron, Coil, and Trimmer Locations

Pilot Lamps (3) ....Mazda No. 46, 6.3 volts, 0.25 amperes

POWER SUPPLY RATINGS
Rating A..... 105-125 volts, 50-60 cycles, 80 watt
Rating B..... 105-125 volts, 25-60 cycles, 80 watt
Rating C.100-130/140-160/195-250 volts, 40-60 cycles, 80 wat

POWER OUTPUT RATING
Undistorted..... 2.0 watts
Maximum..... 4.5 watts

LOUDSPEAKER
Type..... Electrodynamic
Voice Coil Impedance..... 2.2 ohms at 400 cycles

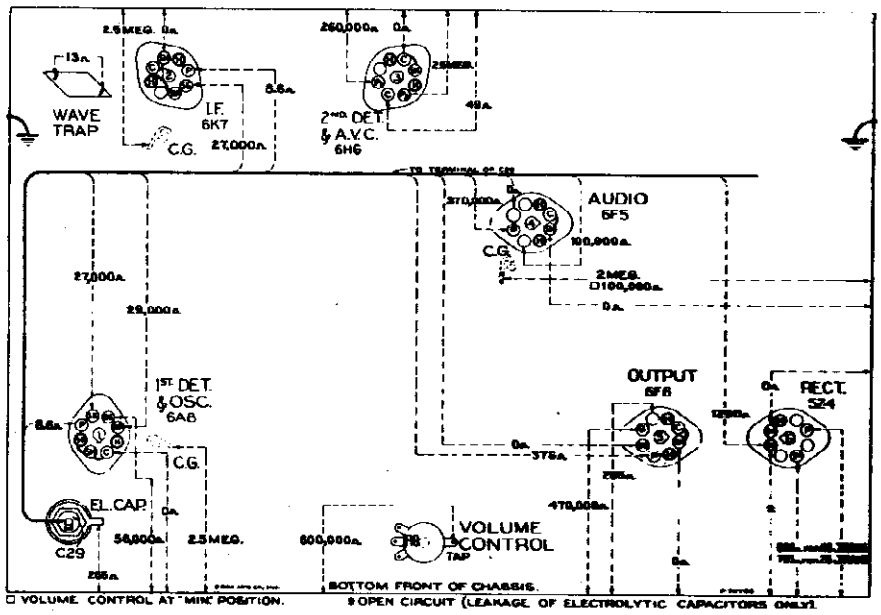

Figure 4—Resistance Diagram

Power supply disconnected—Radiotrons in sockets—Tuning condenser in full mesh—Volume control maximum

Resistance Measurement

The resistance values shown between Radiotron socket contacts, grid caps, resistors, terminals, and receiver chassis ground, on figure 4, have been carefully selected so as to facilitate a rapid continuity check of the circuits. The use of this diagram in conjunction with the Schematic Circuit Diagram, figure 1, and Chassis Wiring Diagram, figure 2, will permit the location of certain troubles which might otherwise be difficult to ascertain. Each value as specified should hold within ±20%. Variations in excess of this limit will usually be indicative of trouble in circuit under test. Resistance values were measured with the Radiotrons in sockets; tuning condenser in full mesh, and volume control set at maximum except where otherwise noted. In all cases of measuring the resistance between points of the circuit and ground, it will be necessary to connect the negative terminal of the resistance meter to chassis-ground. If the polarity of the resistance meter is not known, it may be readily ascertained by connecting a d-c voltmeter of indicated polarity across the terminals of the device.

©John F. Rider, Publisher

Phonograph Attachment

A terminal board is provided for connecting a phonograph into the audio amplifying circuit. Typical

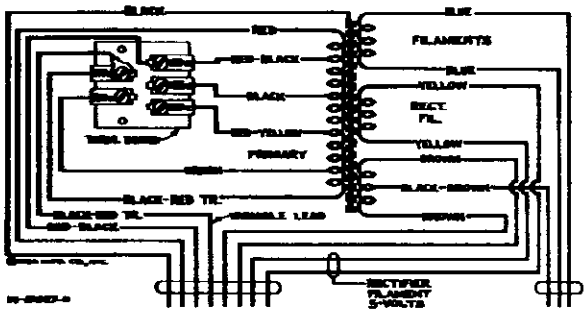

Primary Resistance—24.5 ohms Total
Secondary Resistance—668 ohms Total

Figure 5—Universal Transformer

methods of connecting a low-impedance pick-up, or the RCA Victor Models R-93, R-93-2, and R-93S Record Players are shown on the schematic diagram (figure 1).

Loudspeaker

Centering of the loudspeaker voice coil is made in the usual manner with three narrow paper feelers

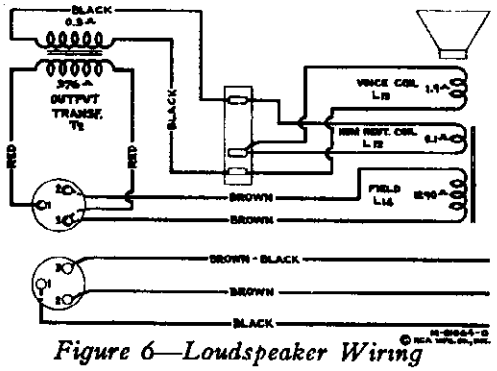

Figure 6—Loudspeaker Wiring

after first removing the front paper dust cover. This may be removed either permanently by cutting it away with a sharp knife, or by softening its cement with a very light application of acetone using care not to allow the acetone to flow down into the air gap. The dust cover may be cemented back in place with ambroid upon completion of adjustment.

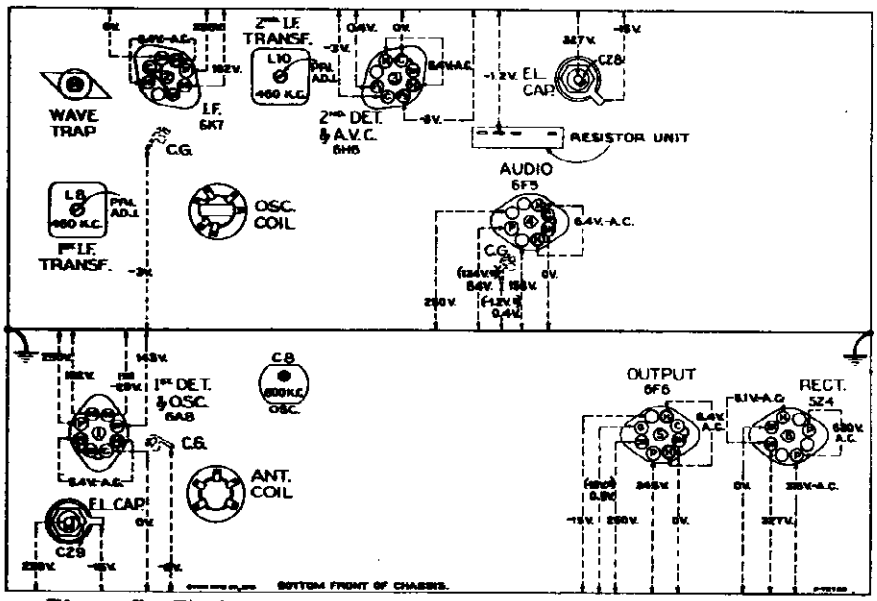

Figure 7—Radiotron Socket Voltages, Coil and Trimmer Locations

Measured at 115 volts, 60-cycle supply—Tuned to approximately 1,000 kc. ("Standard broadcast")—No signal being received—Volume control minimum

Radiotron Socket Voltages

***Note:** Two voltage values are shown for some readings. The higher value shown in parenthesis with asterisk (*) indicates operating conditions without voltmeter loading. The lower value is the actual measured voltage and differs from the higher value because of the additional loading of the voltmeter through the high series circuit resistance.*

The voltage values indicated from the Radiotron socket contacts, grid caps, resistors, and terminals to receiver chassis ground on figure 7 will assist in locating cause for faulty operation. Each value as specified should hold within $\pm 20\%$ when the receiver is normally operative at its rated line voltage. Variations in excess of this limit will usually be indicative of trouble in the basic circuits. These voltages were measured with receiver tuned to approximately 1,000 kc, no signal being received, and volume control set at minimum. To duplicate the conditions under which the voltages were measured requires a 1,000-ohm-per-volt d-c meter, having ranges of 10, 50, 250, 500, and 1,000 volts. Use the nearest range above the voltage to be measured. A-c voltages were measured with a corresponding a-c meter.

MODELS 6T, 6K
Circuit Data
Alignment, Parts

RCA MFG. CO., INC.

Mechanical Specifications

Cabinet Dimensions	Model 6T	Model 6K
Height	19 inches	37½ inches
Width	13⅜ inches	23 inches
Depth	8¾ inches	11 inches
Weights (Net)	22 pounds	43 pounds
Weights (Shipping)	27 pounds	55 pounds
Operating Controls	(1) Power Switch—Tone, (2) Tuning, (3) Volume, (4) Range Selector	
Tuning Drive Ratio	10 to 1	

Chassis Base Dimensions 12 inches x 7 inches x 2½ inches
Over-all Chassis Height 7½ inches

General Features

These receivers employ the same chassis and have many distinctive features. Model 6T employs an 8-inch dynamic loudspeaker and Model 6K employs a 12-inch dynamic loudspeaker. The superheterodyne circuit is used with such features of design as: magnetite core adjusted i-f transformers, improved core adjusted antenna wave-trap, aural compensated volume control, continuously variable tone control with music-voice switch, automatic volume control, resistance coupled audio system, phonograph terminal board, band selective illumination of dial scales, and a dust-proof loudspeaker.

Tuning is continuous through the "Standard broadcast" and "Short wave" bands (including 49 meters). The "Short wave" position of this extensive range also includes channels assigned for police, amateur, and aviation communication. Trimming adjustments are located at accessible points. Their number is reduced to the least that is consistent with efficient operation. The tuning dial ratio of ten to one permits ease of tuning, especially in the "Short wave" band.

Circuit Arrangement

The first detector and oscillator functions are accomplished in a single tube, an RCA-6A8. The input of this tube is coupled to the antenna through a tuned transformer. A shunt (magnetite core adjusted) wave-trap is connected across the primary of this transformer to prevent signals of intermediate frequency (460 kc) from being introduced into the first stage as interference. The two-section gang condenser, which tunes the antenna transformer secondary and the heterodyne oscillator coil, has adjustable trimmers for obtaining exact alignment. Each of these coils is tapped so that the range switch increases the range of tuning by decreasing the amount of inductance.

The intermediate-frequency stage is coupled to the RCA-6A8 and to the RCA-6H6 by means of tuned transformers. These transformers resonate with fixed capacitors and are adjusted by molded magnetite cores to tune to 460 kc.

The modulated signal, as obtained from the output of the i-f system, is detected by one of the diodes of the RCA-6H6 tube. Audio frequency secured by this process is passed on to the control grid of the RCA-6F5 for amplification before final reproduction. The d-c voltage, which results from detection of the signal, is used for automatic volume control. This voltage, which develops across resistor R7, is applied as automatic control grid bias to the first detector and i-f tubes through a suitable resistance filter. The second diode of the RCA-6H6 is used to supply residual bias for the controlled tubes under conditions of little or no signal. This auxiliary diode, under such conditions, draws current which flows through resistors R7 and R7, thereby maintaining the desired minimum operating bias on such tubes. On application of signal energy above a certain level, however, the auxiliary bias diode ceases to draw current and the a.v.c. diode takes over the biasing function.

Manual volume control is effected by means of an acoustically tapered potentiometer connected as a variable coupling element between the output of the second detector and the first audio control grid. After amplification by the RCA-6F5, the audio signal is transmitted by resistance-capacitance coupling to the input of the RCA-6F6 power-output stage, which, in turn, is transformer-coupled to the dynamic speaker.

Continuously variable tone control is effected by means of capacitor C26 and variable resistor R14 shunting the plate circuit of the output tube. Extreme clockwise rotation of this tone control disconnects the resistor R14 from the circuit and places an additional capacitor C27 in shunt with capacitor C20, thereby reducing the low-frequency response of the amplifier. This point is known as the "Speech" position and provides optimum intelligibility of speech.

The power-supply system consists of an RCA-1Z4 rectifier tube which is supplied from an efficiently designed power transformer and which works into a suitable filter. The various potentials required for the plate, screen, control grid, and cathode circuits are obtained from the output of the filter. The electrodynamic loudspeaker field coil is used as a filter reactor.

SERVICE DATA

The various diagrams of this booklet contain such information as will be needed to isolate causes for defective operation if such develops. The ratings of the resistors, capacitors, coils, etc., are indicated adjacent to the symbols signifying these parts on the diagrams. Identification tables, such as R3, L2, C1, etc., are provided for reference between the illustrations and the Replacement Parts List. The coils, reactors, and transformer windings are rated in terms of their d-c resistances only. Ratings of less than one ohm are generally omitted.

Alignment Procedure

There are three alignment trimmers provided in the antenna transformer and oscillator coil tuned circuits. The i-f transformer adjustments are made by means of screws attached to molded magnetite cores. All of these circuits have been accurately adjusted during manufacture and should remain properly aligned unless affected by abnormal conditions or altered during servicing. Loss of sensitivity, improper tone quality, and poor selectivity are the usual indications of improper alignment.

The correct performance of this receiver can only be obtained when the aligning has been done with adequate and reliable apparatus. The manufacturer of this receiver has available, for sale through its distributors and dealers, a complete assortment of such service equipment as may be needed for the alignment operation.

A test oscillator, such as the RCA Stock No. 9595, is required as a source of the specified alignment frequencies. Visual indication of receiver output during the adjustment is necessary and should be accomplished by the use of an indicator such as the RCA Stock No. 4317 Neon Output Indicator.

The procedure outlined below should be followed in adjusting the various trimmer capacitors and molded cores:

I-F Core Adjustments

The four adjustment screws (attached to molded magnetite cores) of the two i-f transformers (one on top and one on bottom of each i-f transformer) are located as shown by figures 3 and 7. Each circuit must be aligned to a basic frequency of 460 kc. To do this, attach the output indicator across the loudspeaker voice coil.

Connect the output of the test oscillator to the control grid of the RCA-6A8 through a .05 mfd. capacitor. Connect the test oscillator ground terminal to the ground terminal of the receiver chassis. Range selector should be in "Short wave" position. Tune the oscillator to 460 kc. Advance the receiver volume control to its full-on position and adjust the receiver tuning control to a point, within its range, where no interference is encountered either from local broadcast stations or from the heterodyne oscillator. Increase the output of the test oscillator until a slight indication is present on the output indicator. Adjust the two magnetite core screws of the second i-f transformer to produce maximum (peak) indicated receiver output. Then, adjust the two magnetite core screws of the first i-f transformer for maximum (peak) receiver output as shown by the indicating device. During these adjustments, regulate the test oscillator output so that the indication is always as low as possible. By doing so, broadness of tuning due to a.v.c. action will be avoided. It is advisable to repeat the adjustment of all i-f magnetite core screws to assure that the interaction between them has not disturbed the original adjustment.

Wave-Trap Adjustment

Attach the output of the test oscillator to the receiver "Antenna" terminal through a **200 mmfd. (important)** capacitor. The ground connections remain connected together. Leave the test oscillator adjusted to 460 kc and range selector in "Short wave" position as before. Then adjust the wave-trap screw to the point which causes maximum suppression of the 460 kc signal.

R-F Trimmer Adjustments

Calibrate the tuning dial by setting the pointer to a horizontal position (53 on "Standard broadcast" scale) with the wo-gang tuning condenser in full mesh. The output indicator should be left connected to the system. Connections for the test oscillator remain the same as for "Wave-trap adjustment." Adjust the test oscillator to 1,700 kc and set the receiver tuning control to a dial reading of 1,700 kc. Leave the volume control of the receiver at its maximum position. Make sure that the range selector is at its broadcast position. Regulate the output of the test oscillator until a slight indication is perceptible at the receiver output. Then adjust the two trimmers, C6 and C9, of the oscillator and antenna transformer coils (mounted on the variable condenser) so that each produces maximum (peak) receiver output. After this maximum has been accurately obtained, shift the test oscillator to 600 kc. Tune the receiver to pick up this signal, disregarding the dial reading at which it is best received. Then, adjust the receiver oscillator series trimmer, C8, simultaneously rocking the tuning control backward and forward through the signal until maximum receiver output results from these combined operations. The adjustment at 1,700 kc should then be repeated to correct for any change which may have been caused by the oscillator series trimmer adjustment.

REPLACEMENT PARTS

Stock No.	Description	List Price
	RECEIVER ASSEMBLIES	
5237	Bushing—Variable condenser mounting bushing assembly—Package of 3	$0.45
12511	Cap—Grid contact cap—Package of 5	.15
11465	Capacitor—Adjustable capacitor (C8)	.48
12630	Capacitor—13 Mmfd. (C5)	.20
12661	Capacitor—56 Mmfd. (C1)	.20
12946	Capacitor—153 Mmfd. (C11, C15, C16, C17)	.20
12406	Capacitor—180 Mmfd. (C18)	.26
12663	Capacitor—220 Mmfd. (C21)	.20
12660	Capacitor—1,350 Mmfd. (C10)	.28
4068	Capacitor—.005 Mfd. (C9, C25)	.20
11315	Capacitor—.015 Mfd. (C27)	.20
12670	Capacitor—.033 Mfd. (C26)	.20
4030	Capacitor—.01 Mfd. (C19, C20, C23)	.35
4041	Capacitor—0.1 Mfd. (C4, C22)	.22
11414	Capacitor—0.1 Mfd. (C12)	.20
4040	Capacitor—0.25 Mfd. (C13, C24)	.30
5170	Capacitor—0.25 Mfd. (C14)	.25
11240	Capacitor—10 Mfd. (C28)	1.08
5212	Capacitor—18 Mfd. (C29)	1.16
12648	Coil—Antenna coil less shield (L2, L3, L4, L5)	1.35
12649	Coil—Oscillator coil with shield (L6, L7)	1.30
12643	Condenser—2-gang variable tuning condenser (C2, C3, C6, C7)	1.46
5119	Connector—3-contact female speaker cable connector	.25
12006	Core—Adjustable core and stud for I.F. transformer, Stock Nos. 12632 and 13633	.22
12684	Core—Adjustable core and stud for wave trap, Stock No. 11654	.22
12658	Dial—Station selector dial	.63
12656	Drive—Variable condenser drive shaft and pinion	.58
12655	Gear—Large gear located on variable condenser shaft	.34
12637	Indicator—Station selector indicator	.20
5226	Lamp—Dial lamp—Package of 5	.70
12663	Mask—Dial light diffuser, complete with red and green colored screen	.20
12647	Range Switch (S2)	.68
18669	Resistor—.063 ohm, flexible type (R15)	.20
13454	Resistor—6,800 ohm, carbon type, ½ watt—Package of 5 (R2)	1.00
8070	Resistor—22,000 ohm, carbon type, ½ watt—Package of 5 (R11)	1.00
11400	Resistor—27,000 ohm, carbon type, ½ watt—Package of 5 (R9)	1.00
12011	Resistor—27,000 ohm, carbon type, 1 watt—Package of 5 (R4)	1.10
5029	Resistor—36,000 ohm, carbon type, ½ watt—Package of 5 (R1)	1.00
11787	Resistor—56,000 ohm, carbon type, 1/10 watt—Package of 5 (R6)	.75
12263	Resistor—100,000 ohm, insulated, ¼ watt—Package of 5 (R12)	1.00
5118	Resistor—100,000 ohm, carbon type, ½ watt—Package of 5 (R10)	1.00
11598	Resistor—220,000 ohm, carbon type, 1/10 watt—Package of 5 (R7)	.75
11455	Resistor—270,000 ohm, carbon type, 1/10 watt—Package of 5 (R11)	.75
11452	Resistor—470,000 ohm, carbon type, 1/10 watt—Package of 5 (R13)	.75
11636	Resistor—2.2 megohms, carbon type, ½ watt—Package of 5 (R5)	1.00
12004	Resistor—Voltage divider resistor—Consisting one 196 ohm, one 27 ohm and one 22 ohm sections (R16, R17, R18)	.45
12008	Shield—First or second I.F. transformer shield	.28
12630	Shield—Antenna coil shield	.22
12733	Shield—Dial lamp shield—Package of 5	.25
12607	Shield—First I.F. transformer shield cup	.30
12631	Shield—Oscillator coil shield	.22
12581	Shield—Second I.F. transformer shield cup	.34
11199	Socket—Dial lamp socket	.14
11195	Socket—5-contact 5Z4 rectifier socket	.15
11198	Socket—7-contact 6F5, 6H6 or 6K7 resistron socket	.28
11196	Socket—8-contact 6A8 or 6F6 resistron socket	.22
12007	Spring—Retaining spring for core Stock No. 12006 and 12684—Package of 10	.36
12668	Tone Control and Switch (R14, S1)	1.22
13106	Transformer—Pure I.F. transformer, complete (L8, L9, C11, C15)	1.60
11999	Transformer—Power transformer, 105-125 volt, 50-60 cycle (T1)	3.80
12132	Transformer—Power transformer, 105-125 volt, 25-50 cycle (T1)	3.48
12133	Transformer—Power transformer, 105-250 volt, 40-60 cycle (T1)	6.25
13107	Transformer—Second I.F. transformer, complete (L10, L11, C16, C17, C18, R8, R7)	2.06
12654	Trap—Wave trap (L1)	.75
13144	Volume Control (R8)	1.00
	REPRODUCER ASSEMBLIES	
12641	Board—3-contact reproducer terminal board	.15
12640	Bracket—Output transformer mounting bracket and clamp	.18
12012	Coil—Field coil (L14)	1.85
11469	Coil—Neutralizing coil (L12)	.30
13642	Cone—Reproducer cone and dust cap (L13) (Model 6T)	.94
12867	Cone—Reproducer cone and dust cap (L13) (Model 6K)	1.00
5118	Connector—3-contact male speaker cable connector	.25
12666	Cover—Speaker cover (Model 6K)	.65
9696	Reproducer complete (Model 6K)	6.90
9699	Reproducer complete (Model 6T)	6.38
11233	Transformer—Output transformer (T2)	1.56
11886	Washer—Spring washer to hold field coil securely—Package of 5	.20
	MISCELLANEOUS ASSEMBLIES	
12639	Escutcheon—Station selector escutcheon and crystal	1.02
12638	Knob—Station selector knob—Package of 5	.50
11582	Knob—Tone control knob—Package of 5	.50
11347	Knob—Volume control or range switch knob—Package of 5	.75
11586	Screw—Receiver mounting screw No. 14x1 in.—Package of 10	.22
11349	Spring—Retaining spring for knob, Stock Nos. 11347, 11582, and 12638—Package of 5	.15

Prices quoted above are subject to change without notice.

©John F. Rider, Publisher

RCA MFG. CO., INC.

MODELS 6T2,6K2
Schematic,Socket,Pickup
Chassis Wiring,Loudspeaker

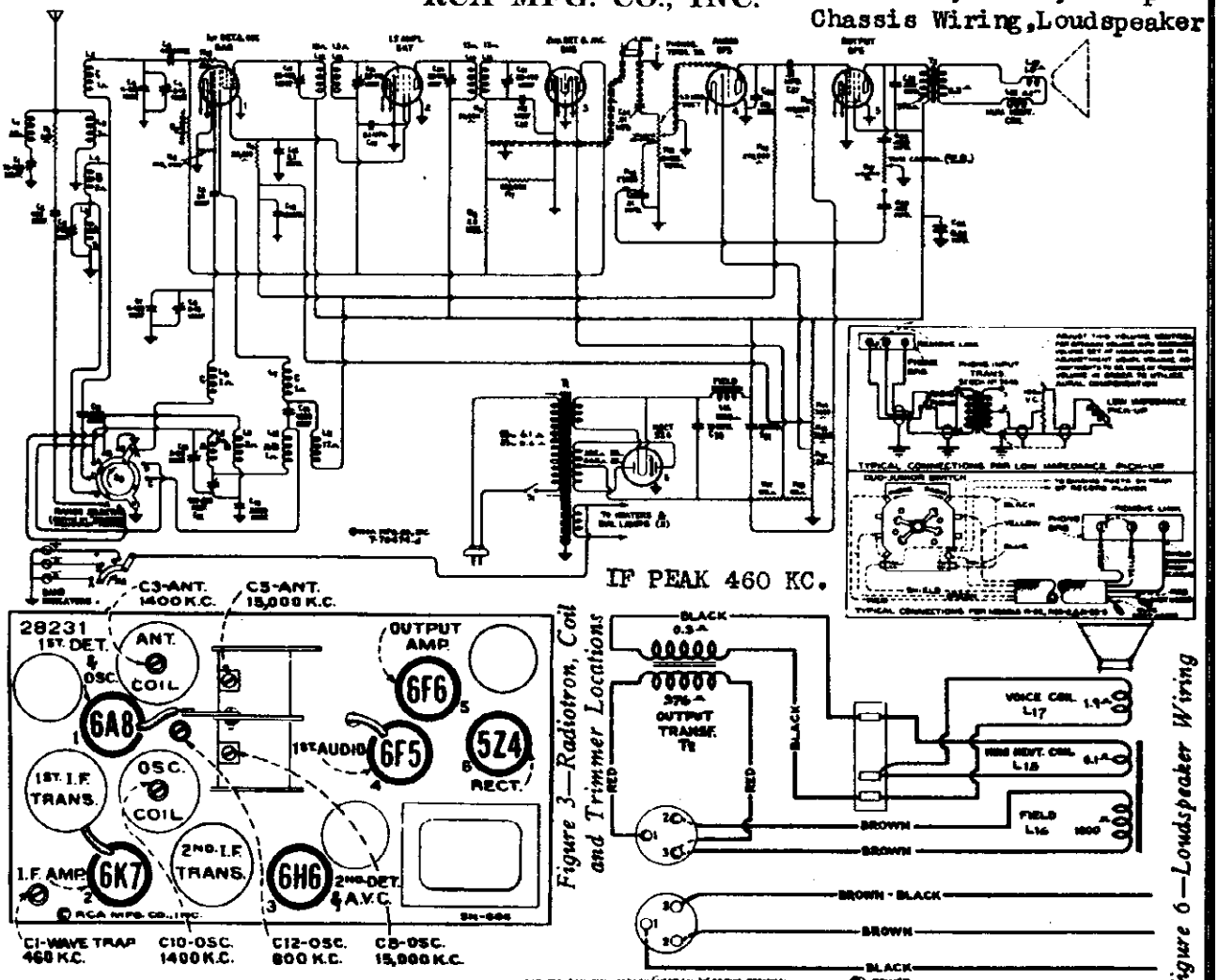

Figure 3—Radiotron, Coil and Trimmer Locations

Figure 6—Loudspeaker Wiring

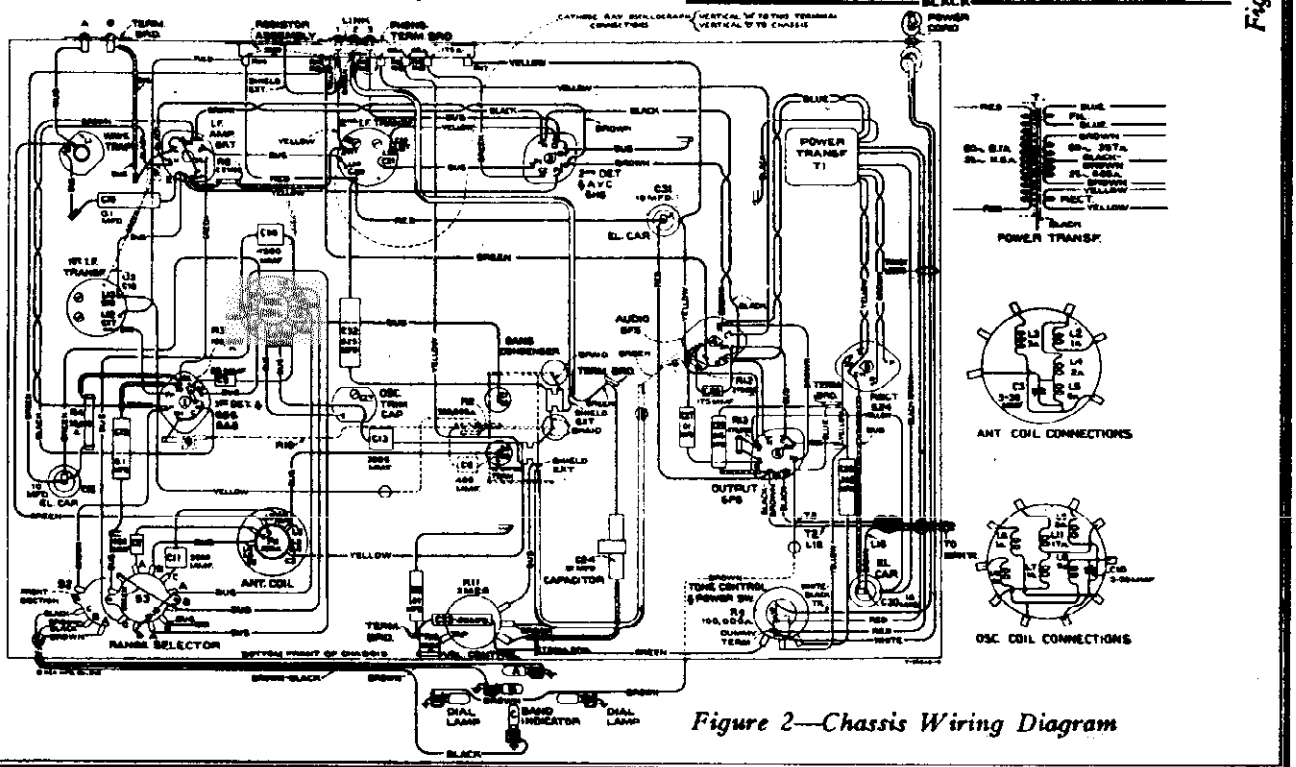

Figure 2—Chassis Wiring Diagram

©John F. Rider, Publisher

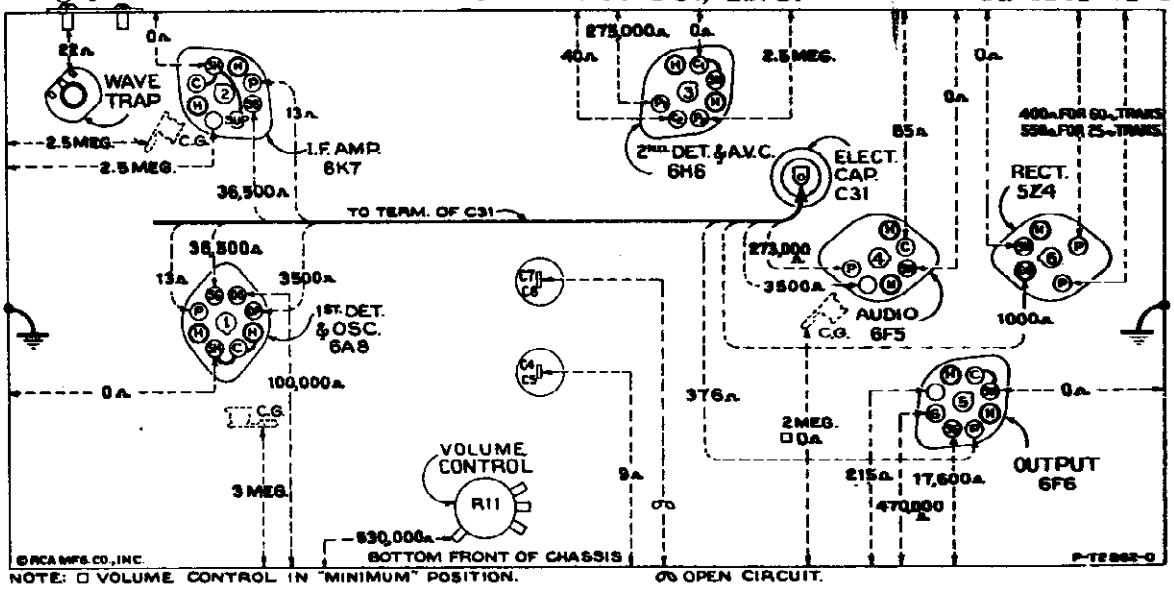

Figure 4—Resistance Diagram

Power supply disconnected—Radiotrons in sockets—Tuning condenser in full mesh—Range selector "Standard broadcast"—Volume control maximum

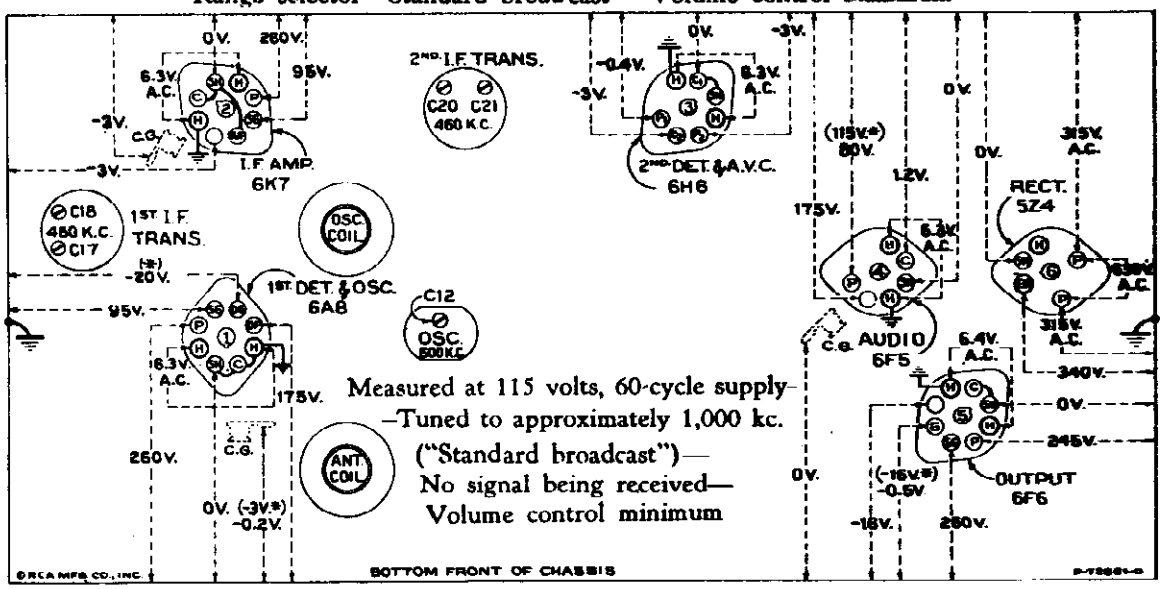

Figure 7—Radiotron Socket Voltages, Coil, and Trimmer Locations

***Note:** Two voltage values are shown for some readings. The higher value shown in parentheses with asterisk (*) indicates operating conditions without voltmeter loading. The lower value is the actual measured voltage and differs from the higher value because of the additional loading of the voltmeter through the high series circuit resistance.*

The voltage values indicated from the Radiotron socket contacts, grid caps, resistors, and terminals to receiver chassis ground on figure 7 will assist in locating cause of faulty operation. Each value as specified should hold within ±20% when the receiver is normally operative at its rated line voltage. Variations in excess of this limit will usually be indicative of trouble in the basic circuits. These voltages were measured with receiver tuned to approximately 1,000 kc., no signal being received, and volume control set at minimum. To duplicate the conditions under which the voltages were measured requires a 1,000-ohm-per-volt d-c meter, having ranges of 10, 50, 250, 500, and 1,000 volts. Use the nearest range above the voltage to be measured. A-c voltages were measured with a corresponding a-c meter.

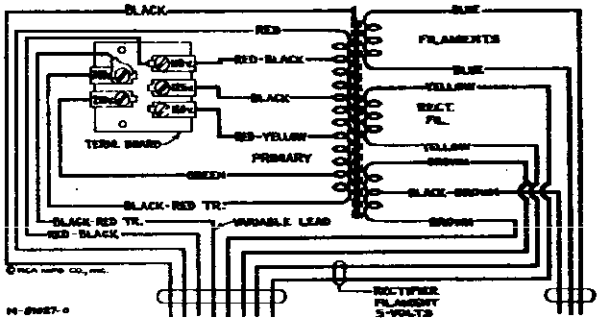

Primary Resistance—17.3 ohms total
Secondary Resistance—355 ohms total

Figure 5—Universal Transformer

©John F. Rider, Publisher

General Features

These receivers employ the same chassis and have many distinctive features. Model 6T2 employs an 8-inch dynamic loudspeaker and Model 6K2 employs a 12-inch dynamic loudspeaker. The superheterodyne circuit is used with such features of design as: Antenna wave-trap, aural compensated volume control, continuously variable tone control with music-voice switch, automatic volume control, resistance coupled audio system, phonograph terminal board, and band selective indication of dial scales. The tuning range is continuous through the "Standard broadcast" band, "Medium wave" band, and the "Short wave" band. It includes domestic broadcast, police, aircraft and amateur services, and also the important foreign short-wave broadcast bands at 49, 31, 25, 19, and 16 meters.

Circuit Arrangement

The first detector and oscillator functions are accomplished in a single tube, an RCA-6A8. The input of this tube is coupled to the antenna through a tuned transformer. This transformer consists of a single primary and three series-connected secondary windings to provide the three ranges of tuning. The oscillator coil system is similarly wound on a single form. A range-selector switch S3 is used for connecting the various sections of these two coil systems into the circuit to provide operation on the band desired. The coils are tuned by a variable two-section gang condenser having trimming capacitors in shunt with each section. There are additional trimming capacitors across the section of each coil used for the "Standard broadcast" band. A series trimming capacitor is also associated with the "Standard broadcast" oscillator coil.

The intermediate-frequency stage is coupled to the RCA-6A8 and to the RCA-6H6 by means of tuned transformers. The windings of these transformers (both primary and secondary) are resonated with adjustable trimming capacitors to tune to 460 kc.

The modulated signal as obtained from the output of the i-f system is detected by an RCA-6H6 twin-diode tube. Audio frequency secured by this process is passed on to the a-f system for amplification and final reproduction. The d-c voltage which results from detection of the signal is used for automatic volume control. This voltage which develops across resistor R7 is applied as automatic control-grid bias to the first detector and i-f tubes. The second (auxiliary) diode of the RCA-6H6 is used to supply residual bias for the controlled tubes under conditions of little or no signal. This diode, under such conditions, draws current which flows through resistors R6 and R7, thereby maintaining the desired operating bias on such tubes. On application of signal energy above a certain level, however, the auxiliary bias-diode ceases to draw current, and the a.v.c. diode takes over the biasing function.

Manual volume control is effected by means of an acoustically tapered potentiometer connected as a variable coupling element between the output of the second detector and the first audio control grid. After amplification by the RCA-6F5, the audio signal is transmitted by resistance-capacitance coupling to the input of the RCA-6F6 power-output stage, which, in turn, is transformer-coupled to the dynamic loudspeaker.

Continuously variable tone control is effected by means of the combination of a capacitor C28 and variable resistor R9 shunting the plate circuit of the output tube. Extreme clockwise rotation of the tone control disconnects the resistor R9 from the circuit and places an additional capacitor, C33, in shunt with capacitor C25, thereby reducing the low-frequency response of the amplifier. This point is known as the "Speech" position and provides optimum intelligibility of speech.

The power-supply system consists of an RCA-5Z4 rectifier tube, which is supplied from an efficiently designed power transformer, and which works into a suitable filter. The various potentials required for the plate, screen, control grid, and cathode circuits, are obtained from the output of the filter. The electrodynamic loudspeaker field coil is used as a filter reactor.

Phonograph Attachment

A terminal board is provided for connecting a phonograph into the audio amplifying circuit. Typical methods of connecting a low-impedance pickup, or the RCA Victor Models R-93, R-93-2, and R-93-S Record Players are shown on the schematic diagram (figure 1).

SERVICE DATA
Alignment Procedure

There are six adjustments required for the alignment of the antenna, oscillator, and wave-trap tuned circuits. The i-f transformer adjustments are made by four trimming capacitor screws. Improper alignment usually causes the impairment of sensitivity, selectivity, and tone quality. Such conditions will usually exist simultaneously.

A standard test oscillator, such as the **RCA Stock No. 9595**, will be required as a source of signal at the specified alignment frequencies. Means for indication of the receiver output during alignment is also necessary to show when the correct point of adjustment is reached. The RCA Stock No. 4317 Neon Glow Indicator is designed for this purpose.

Attach the output indicator across the loudspeaker voice coil. Advance the receiver volume control to its maximum position, letting it remain in such position for all adjustments. For each adjusting operation, regulate the test-oscillator output control so that the signal level is as low as possible and still be observable at the receiver output. Use of such small signal will obviate broadness of tuning which would otherwise result from a.v.c. action on a stronger one.

I-F Adjustments

(a) Connect the test oscillator to the grid cap of the RCA-6A8 through a .001 *mfd.* capacitor, and connect the test oscillator ground to the receiver chassis. Set test oscillator to **460 kc.**

(b) Adjust the two trimming capacitors (**C20** and C21) of the second i-f transformer to produce maximum (peak) output.

(c) Adjust the two trimming capacitors (**C17** and **C18**) of the first i-f transformer, to produce maximum (peak) output.

It is advisable to repeat the adjustment of all i-f trimming capacitors a second time to assure that the interaction between them has not disturbed the original adjustment.

R-F Adjustments

Calibrate the tuning dial by adjusting the scale pointer to the extreme end calibration mark (beyond 55 on dial) **while the two-gang tuning condenser plates are in full mesh. Alignment (see figure 3 for location of trimming adjustments) of "Wave-trap," "Short wave" band and "Standard broadcast" band should be made in the following order and sequence.**

"Wave-Trap"

(a) Connect the output of the test oscillator to the antenna terminal through a **200 mmfd. (important)** capacitor, leaving the test oscillator ground connected to the receiver chassis. With the range selector in its "Standard broadcast" position, set the receiver dial to position of no extraneous signals, near 600 kc. (60 on dial). Set the test oscillator to 460 kc. Adjust the wave-trap trimming capacitor C1 to a point which causes minimum amplitude of output. An increase of the test oscillator output may be necessary before the point of minimum amplitude, obtained by adjustment of wave-trap screw, becomes apparent on the output indicator.

"Short Wave" Band

(a) Connect the output of the test oscillator to the antenna terminal through a **300-ohm** resistor, leaving the test oscillator ground connected as before.

(b) Set the range selector to its "Short wave" position. Set receiver dial pointer to **15,000 kc. (15 on dial)**. Adjust the test oscillator to **15,000 kc.** Adjust the oscillator trimming capacitor C8 to the point which produces maximum (peak) output. Two points may be found, each of which produces a maximum. The one of maximum trimmer capacitance (most clockwise) is correct and should be used.

(c) Adjust the antenna trimming capacitor C5 of the variable condenser, simultaneously rocking the receiver tuning control backward and forward through the **15,000 kc.** input signal, **until maximum (peak) output results from these combined operations.**

"Standard Broadcast" Band

(a) Connect the output of the test oscillator to the antenna terminal through a **200 mmfd. capacitor, leaving test oscillator ground connected as before.**

(b) Set the **range** selector to its "Standard broadcast" position. Set the receiver dial pointer to **1,400 kc.** (140 on dial). Adjust the test oscillator to 1,400 kc. Adjust the oscillator and antenna trimming capacitors, C10 and C3 respectively, to the points where each produces maximum (peak) output.

(c) Shift the test oscillator frequency to 600 kc. and tune the receiver to pick up this signal, disregarding the dial reading at which it is best received.

(d) Adjust the low-frequency oscillator trimming capacitor, C12, simultaneously rocking the tuning control of the receiver backward and forward through the signal, until maximum (peak) output results from these combined operations. Repeat adjustments in (b) to compensate for any changes caused by the adjustment of the low-frequency oscillator coil trimming capacitor.

Electrical Specifications

Frequency Ranges

"Standard broadcast" (A)	540- 1,625 kc.
"Medium wave" (B)	1,625- 5,700 kc.
"Short wave" (C)	5,700-18,000 kc.
Intermediate Frequency	460 kc.

Alignment Frequencies

"Standard broadcast" (A)	600 kc. (osc.), 1,400 kc. (osc. and ant.)
"Medium wave" (B)	None required
"Short wave" (C)	15,000 kc. (osc. and ant.)

Radiotron Complement

(1)	RCA-6A8 — First-detector-oscillator	(4)	RCA-6F5 — Audio voltage amplifier
(2)	RCA-6K7 — Intermediate amplifier	(5)	RCA-6F6 — Audio power amplifier
(3)	RCA-6H6 — Second-detector-a.v.c.	(6)	RCA-5Z4 — Full-wave rectifier

Pilot Lamps (5) — Mazda No. 46, 6.3 volts, 0.25 amperes

Power Supply Ratings

Rating A	105-125 volts, 50-60 cycles, 90 watts
Rating B	105-125 volts, 25-60 cycles, 90 watts
Rating C	100-110/140-160/193-250 volts, 40-60 cycles, 90 watts

Power Output

Undistorted	3.0 watts
Maximum	4.5 watts

Loudspeaker

Type	Electrodynamic
Impedance (v.c.)	2.2 ohms at 400 cycles

REPLACEMENT PARTS

Insist on genuine factory tested parts, which are readily identified and may be purchased from authorized dealers

Stock No.	DESCRIPTION	List Price
	RECEIVER ASSEMBLIES	
12930	Board—Antenna and ground terminal board	$0.20
12717	Board—Phonograph terminal board	.32
12772	Bracket—Top dial lamp socket bracket	.30
8257	Bushing—Variable tuning condenser mounting bushing assembly—Package of 3	.45
11350	Cap—Grid contact cap used on resistor—Stock No. 11624—Package of 5	.30
12511	Cap—Grid contact cap—Package of 5	.18
11445	Capacitor—Adjustable capacitor—(C12)	.60
11289	Capacitor—30 Mmfd.—(C9)	.20
11523	Capacitor—175 Mmfd.—(C22, C26)	.18
11290	Capacitor—400 Mmfd. (C2, C6)	.25
11522	Capacitor—3000 Mmfd.—(C13)	.36
11521	Capacitor—3600 Mmfd.—(C11)	.38
11287	Capacitor—4500 Mmfd.—(C14)	.30
4868	Capacitor—.005 Mfd.—(C29)	.20
11395	Capacitor—.01 Mfd.—(C24)	.18
4858	Capacitor—.01 Mfd.—(C25, C27)	.25
11315	Capacitor—.015 Mfd.—(C33)	.20
12650	Capacitor—.036 Mfd.—(C28)	.20
4841	Capacitor—.1 Mfd.—(C19)	.22
11414	Capacitor—.1 Mfd.—(C15)	.20
3170	Capacitor—0.25 Mfd.—(C32)	.25
11387	Capacitor—10 Mfd.—(C18)	.86
11240	Capacitor—10 Mfd.—(C30)	1.08
3212	Capacitor—18 Mfd.—(C31)	1.15
11617	Coil—Antenna coil less shield—(L2, L3, L4, L5, C3, R1)	1.68
11618	Coil—Oscillator coil less shield—(L6, L7, L8, L9, L10, L11, C10)	2.22
12767	Condenser—2-gang variable tuning condenser (C5, C7, C8, C9)	4.10
5119	Connector—2-wire female connector for speaker cable	.25
12703	Dial—Station selector dial	.85
12758	Drive—Variable tuning condenser worm drive	1.30
11619	Escutcheon—Chassis mounting box and bracket—Package of 5	.65
12770	Holder—Dial scale holder and lamp bracket assembly less bracket for top dial lamp socket	.55
12712	Indicator—Station selector indicator	.55
5826	Lamp—Dial lamp—6.3 volt—Package of 5	.70
12718	Mask—Dial light diffuser complete with red, orange and green colored screen	.40
11486	Resistor—Voltage divider resistor—consisting of 3 resistors (R14, R15, R16, R17, R18)	.95
11624	Resistor—1 meg. 1/10 watt type composition with grid contact cap—(R19)	.22
11620	Resistor—220 ohms—Carbon type—1/10 watt—(R1)—Package of 5	.75
11400	Resistor—27,000 ohms—Carbon type—½ watt—(R10)—Package of 5	1.00
8072	Resistor—35,000 ohms—Carbon type—½ watt—(R4)—Package of 5	1.00
11262	Resistor—56,000 ohms—Carbon Type—1/10 watt—(R2)—Package of 5	.75
5118	Resistor—100,000 ohms—Carbon type—½ watt—(R3)—Package of 5	1.00
11398	Resistor—220,000 ohms—Carbon type—1/10 watt—(R7)—Package of 5	.75
11423	Resistor—270,000 ohms—Carbon type—1/10 watt—(R12)—Package of 5	.75
11422	Resistor—470,000 ohms—Carbon type—1/10 watt—(R13)—Package of 5	.75
11397	Resistor—560,000 ohms—Carbon type—1/10 watt—(R2)—Package of 5	.80.75
11626	Resistor—2.2 megohms—Carbon type—½ watt—(R6)—Package of 5	1.00
11390	Shield—I. F. transformer shield for Stock Nos. 11388 and 11389	.35
11603	Shield—Coil shield for Stock Nos. 11617 and 11618	.25
12738	Shield—Dial lamp shield—Package of 5	.35
12771	Socket—Dial lamp socket—Located at top of dial scale	.35
11390	Socket—Dial lamp socket	.14
11391	Socket—5-contact 5Z4 Radiotron socket	.15
11390	Socket—7-contact 6F5, 6H6 Radiotron socket	.15
11106	Socket—8-contact 6A8, 6F6 or 6K7 Radiotron socket	.15
12759	Switch—Range switch—(S2, S3)	1.25
12666	Tone Control—Control and power switch—(R9, S1)	1.22
11388	Transformer—First I. F. transformer less shield—(L12, L13, C17, C18)	1.90
11844	Transformer—Power transformer—105-125-volt, 50-60-cycle—(T1)	4.40
11849	Transformer—Power transformer—105-125-volt, 25-40-cycle—(T1)	5.70
11850	Transformer—Power transformer—105-250-volt, 40-60-cycle—(T1)	8.00
11389	Transformer—Second I. F. transformer less shield—(L14, L15, C20, C21, C22, R5, R7)	3.02
11391	Trap—Wave trap—(L1, C1)	1.22
11144	Volume control—(R11)	1.00
	REPRODUCER ASSEMBLIES	
11232	Board—Reproducer terminal board	.18
8080	Bracket—Output transformer mounting bracket and clamp	.14
11470	Coil—Field coil—(L16)	2.15
11460	Coil—Neutralizing coil—(L18)	.30
11235	Cone—Reproducer cone complete—(L17)—Package of 5 (Model 6T2)	3.90
11188	Cone—Reproducer cone complete—(L17)—Package of 5 (Model 6K2)	3.85
5116	Connector—2-contact male connector for speaker cable	.35
12665	Cover—Dust cover (Model 6K2)	.65
8421	Reproducer complete (Model 6T2)	6.85
8422	Reproducer complete (Model 6K2)	7.15
11253	Transformer—Output transformer—(T2)	1.36
11886	Washer—Spring washer to hold field coil assembly—Package of 5	.20
	MISCELLANEOUS ASSEMBLIES	
12606	Crystal—Station selector crystal and escutcheon	1.02
11582	Knob—Range switch knob—Package of 5	.90
11610	Knob—Station selector knob—includes large and small knob—Package of 5	1.00
11547	Knob—Tone control or volume control knob—Package of 5	.75
11377	Screw—Chassis mounting screw assembly used on Model 6T2—Package of 4	.12
11210	Screw—Chassis mounting screw assembly—Used on Model 6K2—Package of 4	.25
11349	Spring—Retaining spring for knob—Stock No. 11347, No. 11582 and small knob of Stock No. 11610—Package of 5	.15
4982	Spring—Retaining spring for large knob of Stock No. 11610—Package of 10	.25

Prices quoted above are subject to change without notice.

Mechanical Specifications

	Model 6T2	Model 6K2
Height	19⅞ inches	18 inches
Width	13½ inches	23⅛ inches
Depth	8½ inches	11⅛ inches
Weight (net)	24 pounds	46 pounds
Weight (shipping)	29 pounds	58 pounds
Chassis Base Dimensions	12 inches x 7 inches x 2½ inches	
Over-all Chassis Height	6 inches	
Operating Controls	(1) Power switch-tone, (2) Tuning, (3) Volume, (4) Range selector	
Tuning Drive Ratios	10 to 1 and 50 to 1	

MODELS BT6-5,BC6-6
Schematic,Socket
Trimmers

RCA MFG. CO., INC.

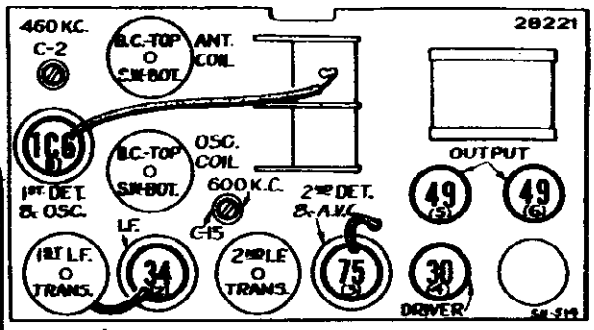

Figure 3—Radiotron and Coil Locations

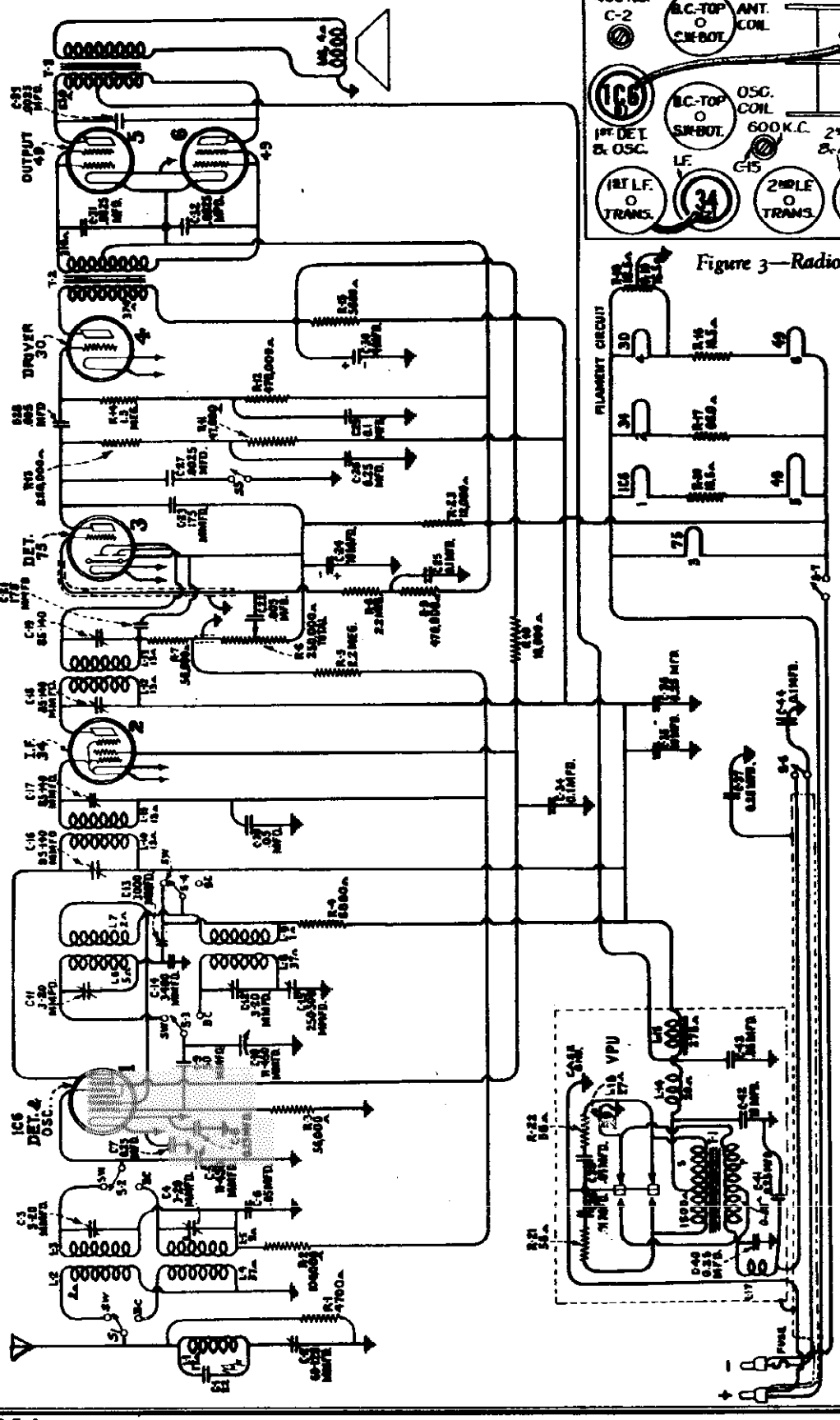

ALIGNMENT FREQUENCIES
Band A.....600 kc. (osc.); 1,720 kc. (osc., ant.)
Band C.....18,000 kc. (osc., ant.)

FREQUENCY RANGES
Band A..... 540- 1,720 kc.
Band C.....5,600-18,000 kc.

Intermediate Frequency ..... **460 kc.**

POWER OUTPUT
Undistorted.....0.8 Watt
Maximum.....1.2 Watts

©John F. Rider, Publisher

MODELS BT6-5,BC6-6
Chassis Wiring

RCA MFG. CO., INC.

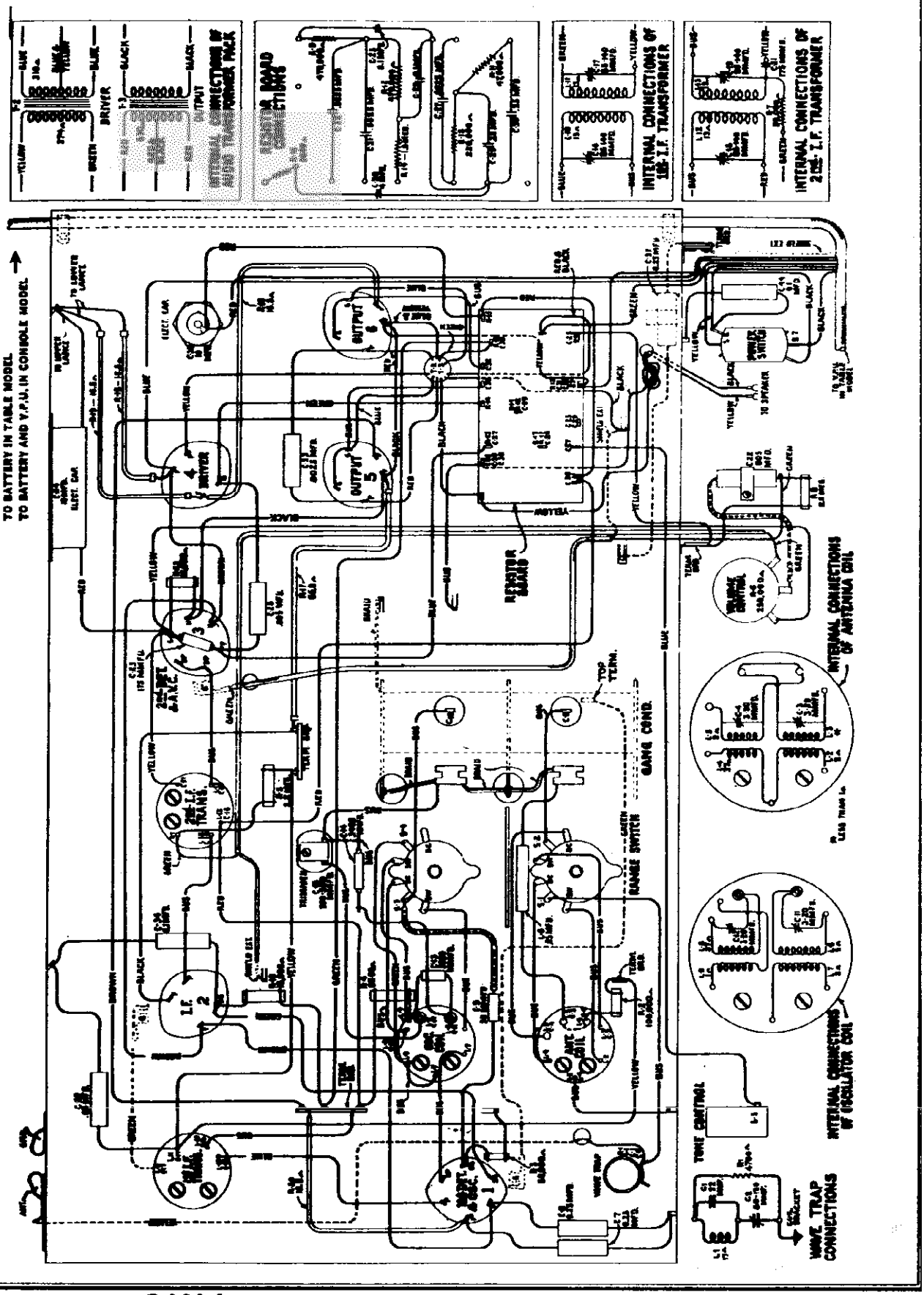

©John F. Rider, Publisher

MODELS BT6-5,BC6-6
Voltage,Trimmers
Vibrator Data

RCA MFG. CO., INC.

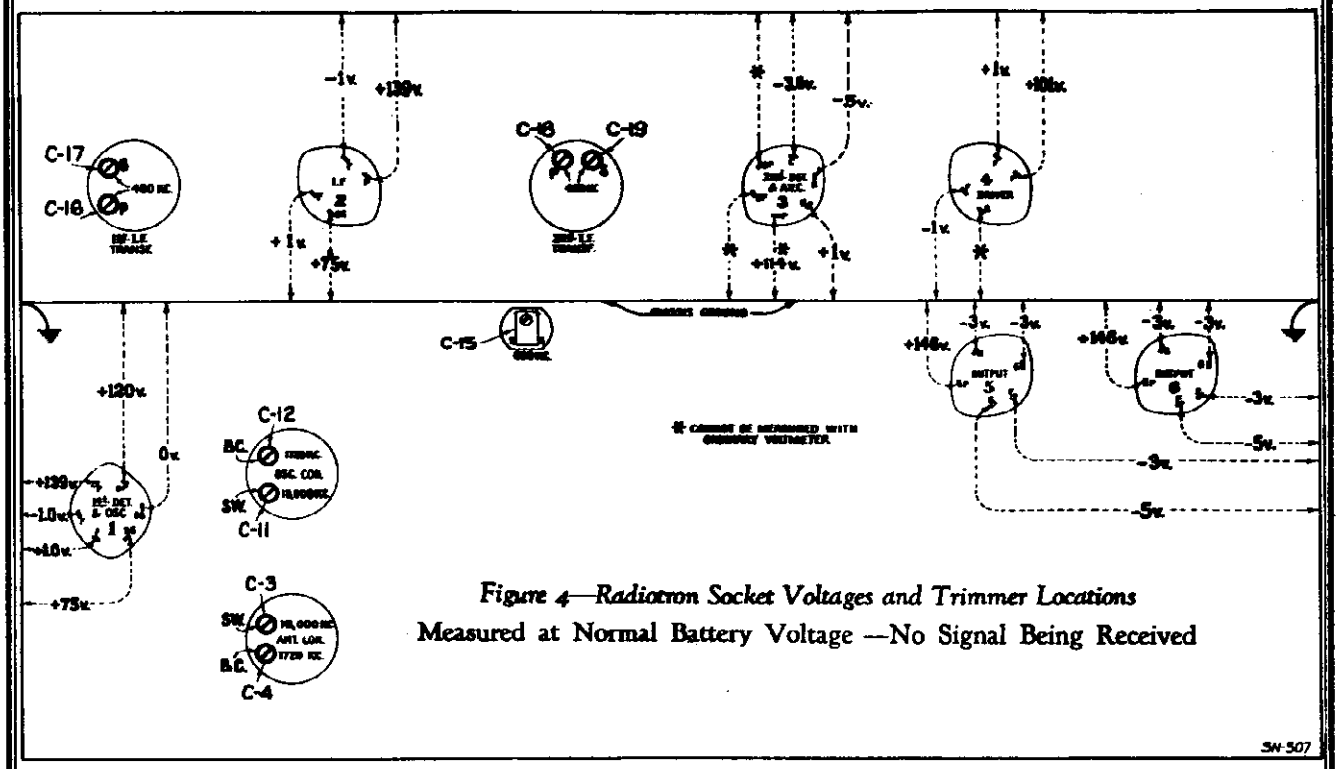

Figure 4—Radiotron Socket Voltages and Trimmer Locations
Measured at Normal Battery Voltage —No Signal Being Received

	BT 6-5	BC 6-6
Height	$20\frac{3}{16}$ inches	38 inches
Width	$14\frac{7}{16}$ inches	24 inches
Depth	$9\frac{3}{4}$ inches	12 inches
Chassis Base	13 inches x $7\frac{1}{2}$ inches x $2\frac{1}{2}$ inches	
Weight (Net)	$33\frac{1}{2}$ pounds	40 pounds
Weight (Shipping)	59 pounds	74 pounds

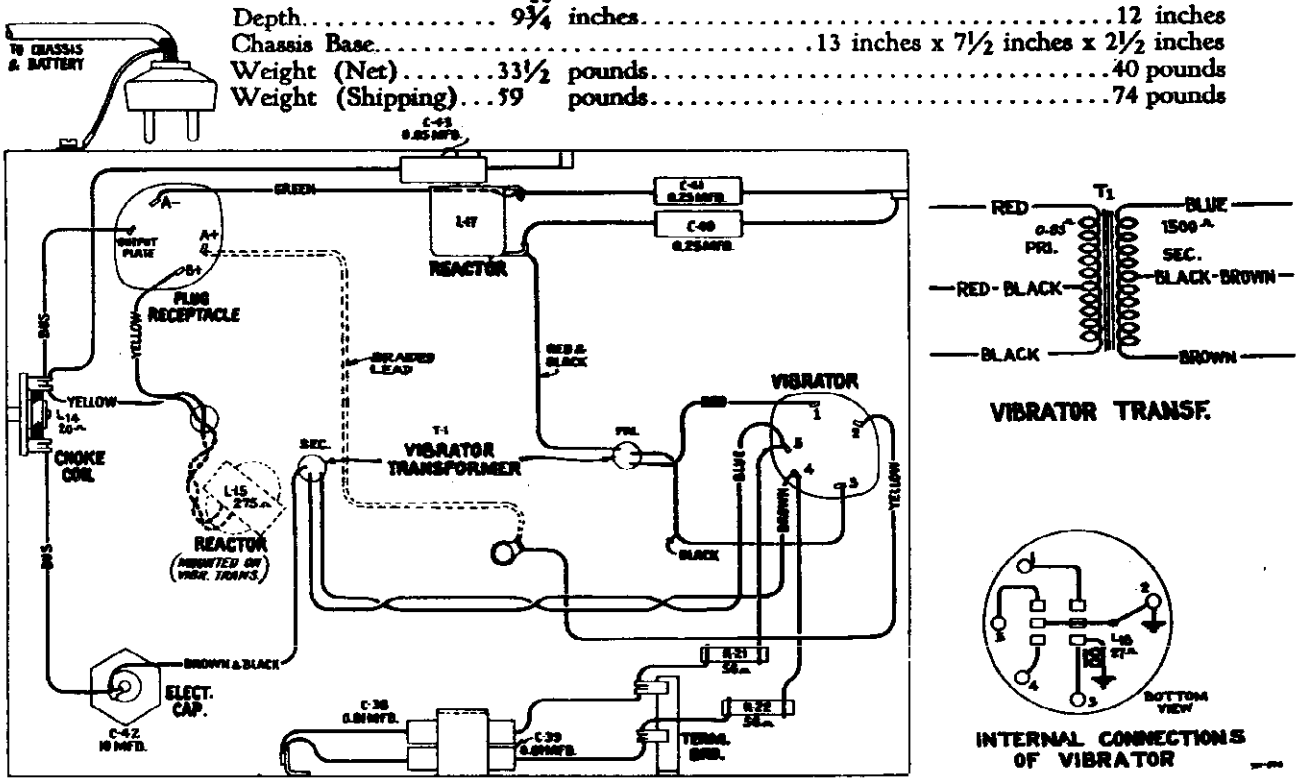

Figure 5—Vibrator Power Unit Wiring

©John F. Rider, Publisher

MODELS BT6-5, BC6-5
Alignment, Parts

RCA MFG. CO., INC.

Circuit Arrangement

The conventional Superheterodyne circuit is used. The first stage combines the local oscillator and first detector functions in one tube, an RCA-1C6. Coils of the detector input and oscillator are tuned by a two-section variable condenser and are aligned by a total of five adjustable trimmers. Selection of the individually wound coil systems is made by the range selector. The oscillator operates at a fundamental frequency which is at all times above the incoming signal by 460 kc.

An RCA-34 is employed as an i-f amplifier. Its input and output are coupled by transformers to the first detector and second detector, respectively. Each transformer has both its secondary and primary windings tuned to 460 kc. by adjustable trimmer capacitors.

The modulated signal, as obtained from the output of the i-f system, is detected by the diode section of the RCA-75. The a-f voltage appearing across the diode load resistor, R-6, is selected by the variable arm of the volume control (R-6) and passed on to the a-f system for amplification and final reproduction. The d.c. which occurs in resistor R-6 due to signal detection, is used for automatic volume control by varying the control-grid bias on the first detector and i-f tubes.

Resistance-capacitance coupling is used between the RCA-75 and the RCA-30 driver tube. A high-frequency tone control, consisting of a switch in series with a condenser, is shunted across the plate circuit of the RCA-77. When this switch is closed, the high a-f frequencies are reduced.

The power output stage is arranged for Class "B" operation. The high level of power afforded is fed to the permanent magnet dynamic speaker through an output transformer.

Battery "On-Off" control is by means of a double pole switch, one side of which controls the filament and bias circuits, while the other side controls the vibrator power unit circuit. A fuse is provided in the V. P. U. circuit.

General Description

These instruments each employ a synchronous type vibrator and require only one 6-volt storage battery for power supply.

The receiver chassis of both models are identical. An 8-inch loudspeaker is used in the table model (BT 6-5) and a 10-inch loudspeaker is used in the console model (BC 6-6).

The tuning range afforded by these instruments includes (1) the standard 540-1,600 kc. broadcast band which extends to cover the 1,700 kc. police channels, and (2) a shortwave band from 5,500-18,000 kc. which covers the principal shortwave broadcast stations on the 49, 31, 25, 19, and 16 meter bands.

Outstanding features include automatic volume control, two-point tone control, antenna wave trap, airplane type dial, dual ratio tuning drive, class "B" output stage, and vibrator power unit (V.P.U.)

BATTERIES REQUIRED
"A" Supply ..... Storage Battery (6-volt)
"B" Supply ..... None
"C" Supply ..... None

CURRENT DRAIN
"A" Battery ..... 1.1 Amperes

FUSE RATING ..... 15 Amperes

RADIOTRON COMPLEMENT
(1) RCA-1C6 ..... First Detector and Oscillator
(2) RCA-34 ..... Intermediate Amplifier
(3) RCA-75 ..... Second Det., A.F. and A.V.C.
(4) RCA-30 ..... Audio Driver Amplifier
(5) RCA-49 ..... Power Output Amplifier
(6) RCA-49 ..... Power Output Amplifier

SERVICE DATA

Alignment Procedure

In readjusting the trimmers to their normal settings, it is quite important to apply a definite procedure and to use adequate and reliable test equipment. A standard source of the specified alignment frequencies is required. It is recommended that such a source consist of an RCA Stock No. 9995 Full-Range Test Oscillator. Means for indication of the receiver output during alignment is also necessary to accurately show when the correct point of adjustment is reached. This indication should be obtained by means of such an instrument as the RCA Stock No. 4317 Neon Glow Indicator. Proceed with the alignment as follows:

Place the receiver in operation where it will be easily accessible. Attach the output indicator across the loudspeaker voice coil circuit, or across the output transformer primary. Advance the receiver volume control to its maximum position, letting it remain in such position for all adjustments. For each trimming operation, regulate the test oscillator output control so that the signal level is as low as possible and still observable at the receiver output. Use of such a small signal will avoid broadness of tuning which would otherwise result from A.V.C. action on a stronger one.

I-F Adjustments

(a) Connect the output of the test oscillator between the control-grid cap of the first detector tube (RCA-1C6) and chassis ground. Adjust the frequency of the oscillator to 460 kc. Tune the receiver to a point where no interference is received from the heterodyne oscillator or local station.

(b) Adjust the trimmers, C-19 and C-18, of the second i-f transformer, and C-17 and C-16 of the first i-f transformer, so that each produces maximum (peak) receiver output as shown by the indicating device. This completes the i-f trimmer adjustments.

R-F Adjustments

(a) Check the calibration of the dial scale by rotating the tuning control until the variable condenser plates are in full mesh. (Maximum capacity.) Then adjust the dial pointer until it points to the horizontal line at the low frequency end of the broadcast band scale.

(b) Connect the output of the test oscillator to the antenna-ground terminals of the receiver. Adjust the receiver range switch to its Band A (broadcast) position. Tune the oscillator to 1,720 kc. Allow the output indicator to remain attached to the receiver output.

(c) Tune the receiver so that the dial reading is 1,720 kc. Then adjust the oscillator and antenna coil trimmers, C-12 and C-4 respectively, tuning each to the point producing maximum indicated receiver output.

(d) Shift the oscillator frequency to 600 kc. and tune the receiver to pick up this signal, disregarding the dial reading at which it is best received. The oscillator series trimmer, C-15, should then be adjusted, simultaneously rocking the receiver tuning control backward and forward through the signal until maximum receiver output results from the combined operations. The adjustment of C-12 should be repeated as in (c) to correct for any change in its alignment due to the adjustment of C-15.

(e) Shift the oscillator frequency to 18,000 kc. Adjust the receiver range switch to its Band C (shortwave) position, and set the receiver dial to a reading of 18,000 kc. The oscillator and antenna trimmers, C-11 and C-3, should then be adjusted for maximum indicated receiver output.

Retune receiver to 17,000 kc. and check for image signal. If C-11 has been correctly aligned, the 18,000 kc. signal will be received. It may be necessary to increase the oscillator output for this indication of the "image." *No adjustments should be made during this check.*

Vibrator Power Unit

The Vibrator Power Unit supplies the necessary plate, screen, and cathode voltage for proper operation of the receiver. It contains a plug-in type vibrator, step-up transformer, and an efficient filter system. Rectification of the high voltage is by means of the synchronous vibrator. The complete unit is acoustically shielded to prevent noise. *The radio chassis is 1 volt negative with respect to the vibrator chassis and, therefore, is necessary to insulate the vibrator power unit from the chassis when they are removed for service purposes.* The vibrator unit has been carefully adjusted by means of special equipment to insure quiet operation over an extensive period of life. No adjustments should be attempted on a vibrator suspected of being in a defective condition, but a renewal installed. A convenient plug-in base is provided for effecting a quick replacement.

Radiotron Socket Voltages

Voltage values indicated at the Radiotron socket contacts on Figure 4 form a reference basis for test of the receiver. All voltages are given in respect to chassis-ground. The values shown are obtainable when the receiver is in normal operating condition. They do not take into account interaction caused by current consumed in accessories connected to the set. The beam power tube, however, will be 7% negative in accuracy. Allowance must therefore be made for dependent upon the type of test instrument used, for the loading effect of the voltmeter on the circuit.

Wave-Trap Adjustment

With the receiver in operation using its normal antenna, tune station selector to the point at which the intermediate frequency interference is most intense. Then adjust the wave trap trimmer to the point which causes maximum suppression of the interference.

REPLACEMENT PARTS

Prod. No.	Description	Labor Prices
11648	Foot—Chassis foot and bushes assembly —Package of 2	.84
11154	Resistor—5.6 ohms—Flexible type— (R16, R30)—Package of 5	.68
11611	Resistor—16.3 ohms—Flexible type— (R18, R19)—Package of 5	.68
11473	Resistor—46 ohms—Flexible type— (R17)—Package of 5	.68
11630	Resistor—1000 ohms—Carbon type— 1/10 watt—(R1)—Package of 5	.73
11647	Resistor—5600 ohms—Carbon type—¼ watt—(R15)—Package of 5	1.00
11726	Resistor—8400 ohms—Carbon type—¼ watt—(R13)—Package of 5	1.00
5109	Resistor—10,000 ohms—Carbon type—½ watt—(R23)—Package of 5	1.00
11175	Resistor—18,000 ohms—Carbon type—½ watt—(R10)—Package of 5	1.00
11646	Resistor—36,000 ohms—Carbon type—½ watt—(R9)—Package of 5	1.00
5029	Resistor—56,000 ohms—Carbon type—½ watt—(R11)—Package of 5	1.00
11781	Resistor—100,000 ohms—Carbon type—½ watt—(R12)—Package of 5	1.00
5158	Resistor—220,000 ohms—Carbon type—½ watt—(R11)—Package of 5	1.00
11772	Resistor—470,000 ohms—Carbon type—½ watt—(R9, R11)—Package of 5	1.00
4741	Resistor—1.5 megohms—Carbon type—½ watt—(R14)—Package of 5	1.00
11656	Resistor—2.2 megohms—Carbon type—½ watt—(R5 R6)—Package of 5	1.00
11641	Shield—Antenna or oscillator coil shield	.34
11590	Shield—Intermediate frequency trans former shield	.22
3662	Shield—Radiotron (1C6 or 75) shield	.22
3056	Shield—Radiotron (34) shield—Package of 2	.40
4794	Socket—4-contact Radiotron (30 or 34) socket	.15
4814	Socket—5-contact Radiotron (49) socket	.15
4784	Socket—6-contact Radiotron (1C6 or 75) socket	.15
11643	Switch—Power switch—(S1, S2)	.60
11641	Switch—Range selector—(S1, S2, S3, S4)	1.50
11644	Switch—Tone control switch—(S5)	.30
5138	Terminal—Antenna terminal board with clip, insulating strip and rivets	.14
11594	Transformer—Audio driver and output transformer—(T7, T8)	4.10
11582	Transformer—First intermediate frequency transformer—(L10, L11, C16, C17)	2.35
11593	Transformer—Second intermediate frequency transformer—(L12, L13, C18, C19)	2.75
11649	Trap—Wave trap—(L, C1, C2, R1)	1.15
11589	Volume control—(R6)	.85
10194	Bolt—Special bolt for drive assembly—Package of 10	.25
4422	Clutch—Tuning condenser drive clutch assembly—comprising drive shaft, balls, ring, spring and washers assembled	1.00
11674	Dial—Station selector dial	.80
11651	Drive—Variable tuning condenser drive assembly	1.84
4520	Indicator—Station selector indicator pointer	.18
4669	Screw—No. 8-32x5/16 set screw for knob—Package of 10	.25
11654	POWER UNIT ASSEMBLIES Capacitor—.01 Mfd.—(C38, C39)	.16
4836	Capacitor—.05 Mfd.—(C41)	.30

Prod. No.	Description	Labor Prices
4840	Capacitor—.25 Mfd.—(C36, C41)	.30
11387	Capacitor—10 Mfd.—(C43)	.84
11651	Coil—Choke coil—(L14)	.56
11657	Reactor—Filter reactor—(L15)	.96
11652	Reactor—(L17)	1.28
5034	Resistor—35 ohms—Carbon type—½ watt—(R21, R22)—Package of 5	1.00
4794	Socket—4-contact socket for cable plug connector	.15
4814	Transformer—Vibrator transformer	.75
11653	Vibrator	6.50
11656	MISCELLANEOUS ASSEMBLIES Body—Fuse connector body—Package of 10	5.92
4289	Cable—Battery cable complete with fuse connector and male connector—for table model	1.00
11655	Cable—Battery cable complete with four contact male connector and two-contact pins—for table model	1.00
11656	Cable—Battery cable complete with four contact male connector, four connector, and two-contact pins—for console model	1.00
4288	Cap—Fuse connector cap—Package of 10	2.60
11654	Connector—Clip and snap connector assembly for storage battery—Package of 10	.56
11655	Connector—Fuse connector—complete	.35
6516	Connector—Four-contact male connector	.16
11570	Connector—Four-contact male connector for battery cable	1.30
11357	Escutcheon—Station selector escutcheon	.22
4286	Ferrule—Fuse connector ferrule and bushing—Package of 10	.70
3023	Fuse—15 Ampere fuse—Package of 5	.38
6614	Glass—Station selector dial glass	.40
4290	Insulator—Fuse connector insulator—Package of 10	.20
11346	Knob—Station selector knob—Package of 5	.35
11453	Knob—Volume control, tone control, range switch or power switch knob—Package of 10	.75
11637	Pin—Connector pin—for battery cable colored black—Package of 5	.48
11658	Pin—Contact pin—for battery cable colored red—Package of 5	.10
4678	Ring—Station selector dial glass retaining ring—Package of 5	.10
5210	Screw—Chassis mounting screw assembly —Package of 4	.34
11348	Screw—No. 8-32x7/16-in. headless cup pointed set screw—for knob, stock No. 11453—Package of 10	.15
4284	Spring—Fuse connector spring—Package of 10	.33
11349	Spring—Retaining spring for knob, stock No. 11453—Package of 5	.30
4285	Washer—Station selector tuning washer —Package of 10	.15
	REPRODUCER ASSEMBLIES Table Model	.22
9539	Cone—Reproducer cone (L9)—Package of 2	4.30
9540	Magnet Assembly — Comprising core bracket, core and magnet	3.72
9538	Reproducer—Complete	7.85
	REPRODUCER ASSEMBLIES Console Model	
9412	Cone—Reproducer cone complete with voice coil—(L9)	1.88
7830	Magnet — Cone housing and magnet assembly	8.38
7819	Reproducer—Complete	12.18

Prod. No.	Description	Labor Prices
4836	Capacitor—.05 Mfd.—(C6, C20)	.30
4841	Capacitor—0.1 Mfd.—(C25, C29, C34, C44)	.22
4840	Capacitor—0.25 Mfd.—(C7, C8, C26, C36, C37)	.30
6312	Capacitor—4 Mfd.—(C30)	.81
11387	Capacitor—10 Mfd.—(C15)	.84
11645	Capacitor—10 Mfd.—(C24)	1.08
11659	Coil—Antenna coil—(L1, L2, L3, C3, C4)	2.40
	Coil—Oscillator coil—(L6, L7, L8, L9, C11, C12)	2.44
11640	Condenser—Two-gang variable tuning condenser (C5, C10)	3.05

POWER OUTPUT	1.2 Watts
Undistorted	
Maximum	
LOUDSPEAKER	
Table Model	8 inch Permanent Magnet
Console Model	10 inch Permanent Magnet

©John F. Rider, Publisher

MODELS T6-7, C6-8
Schematic

RCA MFG. CO., INC.

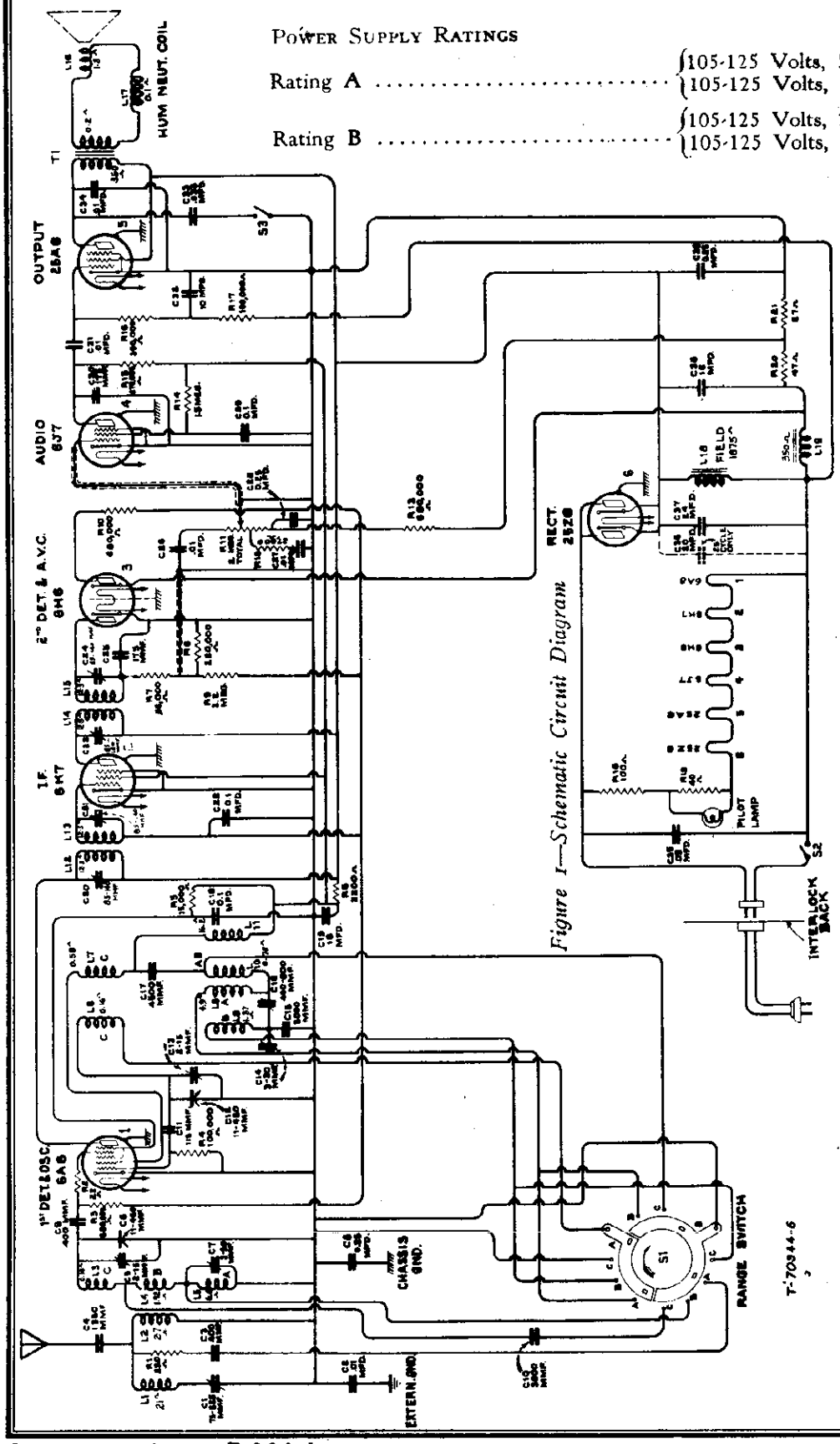

Figure 1—Schematic Circuit Diagram

Power Supply Ratings

Rating A	105-125 Volts, 50-100 Cycles,	60 Watts
	105-125 Volts, D-C	50 Watts
Rating B	105-125 Volts, 25-100 Cycles,	80 Watts
	105-125 Volts, D-C	50 Watts

Frequency Ranges

Band A	540- 1,600 kc.
Band B	1,600- 5,500 kc.
Band C	5,500-18,000 kc.
Intermediate Frequency	**460 kc.**

Power Output (125 V. Line)

Undistorted	0.5 Watt (A-C)....0.4 Watt (D-C)
Maximum	1.2 Watts (A-C)....1.0 Watt (A-C)

Alignment Frequencies

Band A	600 kc. (osc.), 1,400 kc. (osc., ant.)
Band B	None required
Band C	18,000 kc. (osc., ant.)

Loudspeaker

Type	Electrodynamic
Voice Coil Impedance	2.25 Ohms—400 Cycles

©John F. Rider, Publisher

©John F. Rider, Publisher

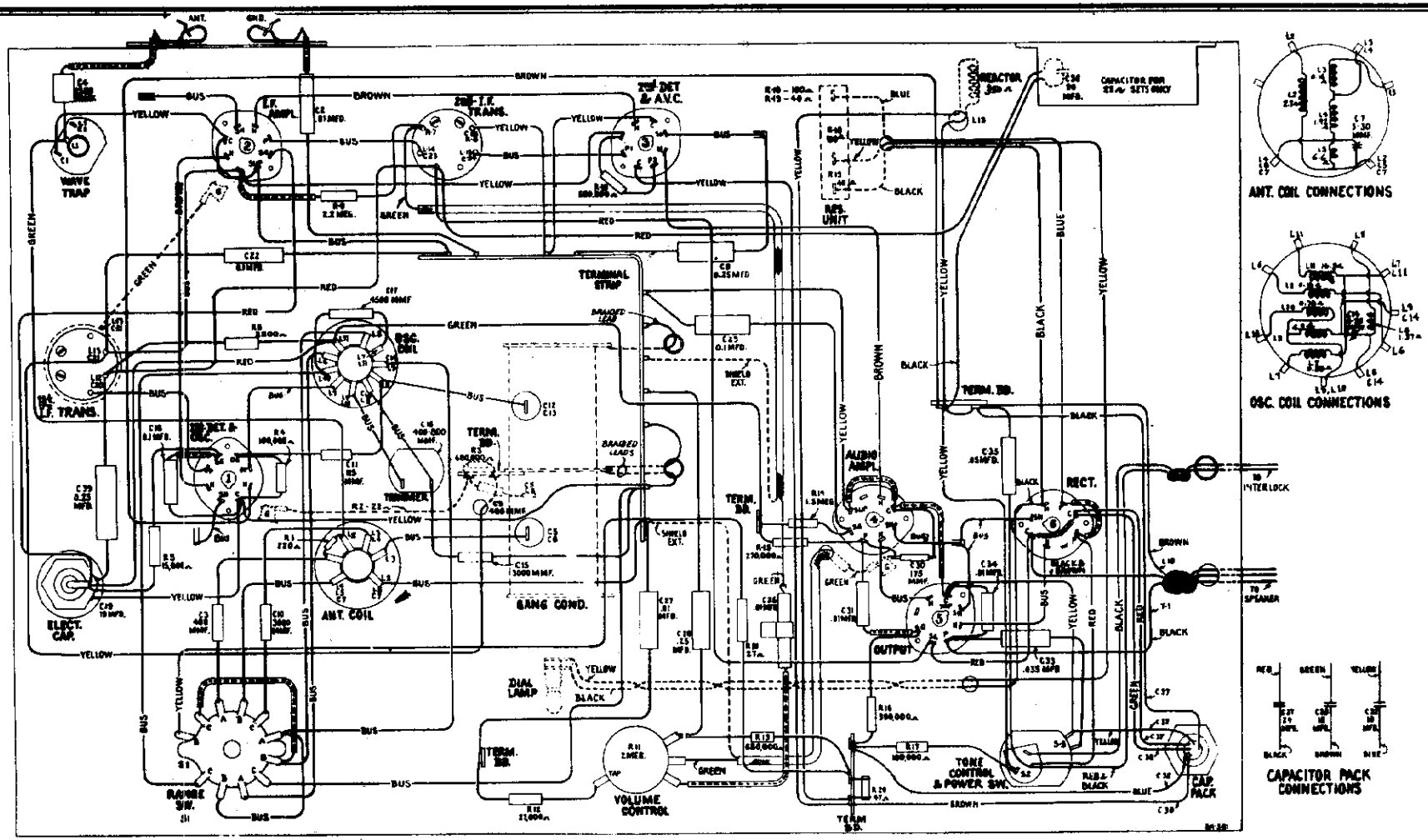

Figure 2—Chassis Wiring Diagram

Mechanical Specifications

Chassis Base Dimensions	12 inches x 7 inches x 2½ inches
Tuning Drive Ratio	10-to-1 and 50-to-1

Model T 6-7		Model C 6-8	
Height	19⅛ inches	Height	37¼ inches
Width	13⅝ inches	Width	23½ inches
Depth	8½ inches	Depth	11 inches
Weight (Net)	17 pounds	Weight (Net)	39½ pounds
Weight (Shipping)	22 pounds	Weight (Shipping)	54 pounds

MODELS T6-7,C6-8
Voltage,Socket
Trimmers,Loudspeaker

RCA MFG. CO., INC.

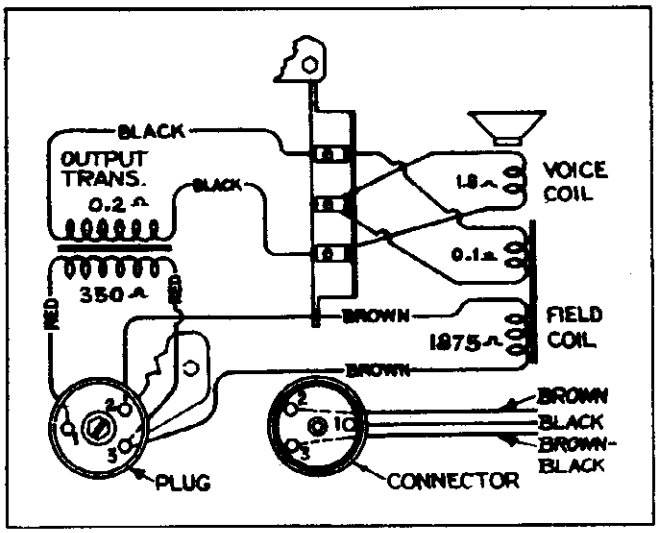

Figure 5—Loudspeaker Wiring

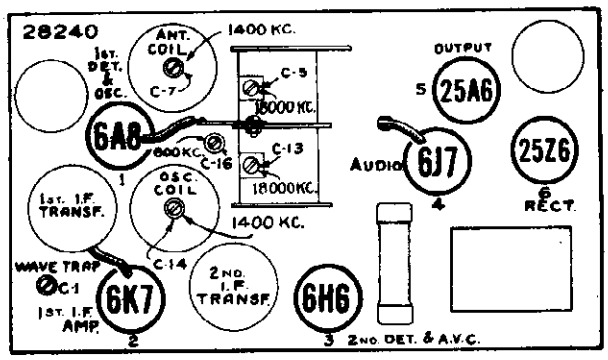

Figure 3—Radiotron, Coil and Trimmer Locations —R. F. Trimmer Adjustment

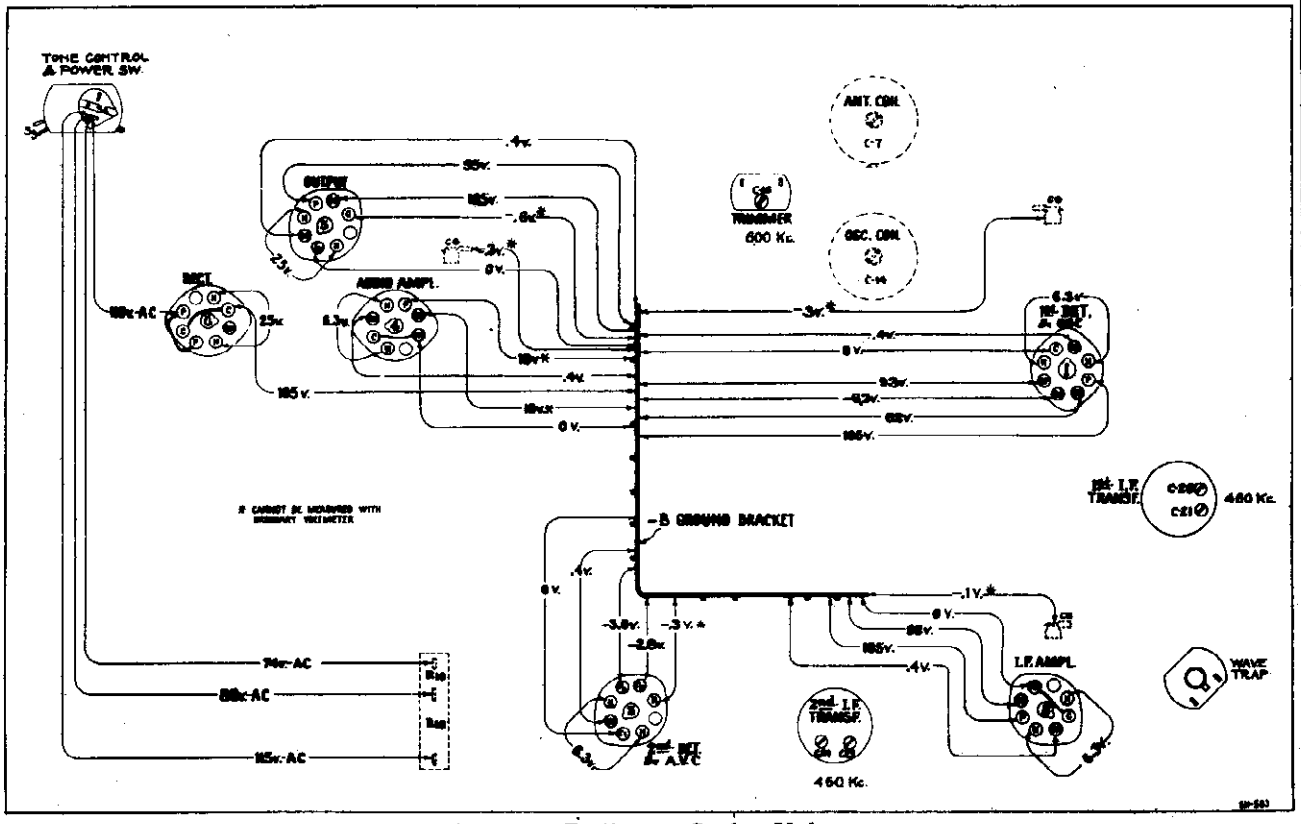

Figure 4—Radiotron Socket Voltages

Measured at 115 volts, 60-cycle supply—For 115 volt D-C approximately 5% lower
Tuned to approximately 900 kc. (Band A)—No Signal Being Received—Volume control set at minimum

NOTES

(1) Beat notes or heterodyning (whistles) may be encountered in some instances on these receivers due to excessive antenna capacitance. This condition may be corrected by reducing the size of the antenna or by inserting a 150 mmfd. capacitor in series with the antenna lead at the antenna terminal. Interference in the form of "beats" from a combination of local stations may frequently be remedied by tuning the wave trap to one of the interfering stations.

©John F. Rider, Publisher

RCA MFG. CO., INC.

MODELS T6-7, C6-8
Circuit Data
Alignment

General Features

These two models each employ the same six-tube chassis. They have the new metallic tubes. The tuning range is from 540 to 18,000 kc. The coverage includes domestic broadcast, police, aircraft and amateur services, and also the important foreign short-wave broadcast bands at 49, 31, 25, 19 and 16 meters. Chassis features include automatic volume control, high-frequency tone control, antenna wave trap and audio tone compensation. The table model (T 6-7) uses an 8-inch dynamic speaker, and the console model (C 6-8) uses an improved 12-inch dynamic speaker. The tuning dial is an illuminated semi-airplane type. Positions of the range selector knob are marked on the control panel to show which tuning band is in use. The tuning control is of the dual-ratio type, which permits rough tuning through a 10-1 drive ratio and vernier tuning through a 50-1 drive ratio. The latter is especially advantageous for accurate tuning of the short-wave stations.

Circuit Arrangement

The conventional superheterodyne type of circuit, consisting of a combined first detector-oscillator stage, a single i-f stage, a diode detector-automatic volume control stage, an audio voltage amplifier stage, an audio power output stage and a half-wave rectifier power supply stage, is used.

Tuned Circuits

The antenna coil system consists of a single primary and three series-connected secondary windings to provide the three ranges of tuning. The oscillator coil system is similarly wound on a single form. A range selector switch (S-1) is used for connecting the various sections of these two coil systems into the circuit to provide operation on the band desired. The coils are tuned by a variable two-section gang condenser having trimmer capacitors in shunt with each section. There are additional trimmer capacitors across the section of each coil used for Band "A." A series trimmer is also associated with the Band "A" oscillator coil.

The intermediate frequency amplifier system consists of an RCA-6K7 in a transformer-coupled circuit. This stage operates at a basic frequency of 460 kc. Each winding of both i-f transformers (input and output) is tuned by an adjustable trimmer.

Detector and A.V.C.

The modulated signal as obtained from the output of the i-f stage is detected by an RCA-6H6 twin-diode tube. The audio frequency secured by this process is transferred to the a-f system for amplification and final reproduction. The d-c voltage which results from detection of the signal is used for automatic volume control. This voltage, which develops across resistor R-8, is applied as automatic control grid bias to the first detector and i-f tubes through a suitable resistance filter circuit. The second (auxiliary) diode of the RCA-6H6 is used to supply residual bias for the controlled tubes under conditions of little or no signal. This diode, under such conditions, draws current which flows through resistors R-8, R-9 and R-10, thereby maintaining the desired minimum operating bias on such tubes. As soon as the rectified signal current develops sufficient voltage across resistor R-8, in opposition to that across resistors R-20 and R-21, current ceases to flow in the auxiliary diode circuit and the signal A.V.C. diode takes over the biasing function.

Audio System

The manual volume control consists of an acoustically tapered potentiometer in the audio circuit between the output of the detector diode and the input grid of the audio voltage amplifier tube. This control has a tone compensating filter connected to it, so that the correct aural balance will be obtained at different volume settings.

Resistance-capacitance coupling is used between the first audio stage and the power output stage. The output of the power amplifier is transformer-coupled into the dynamic loudspeaker. High-frequency tone control is effected by a capacitor across the plate circuit of the output tube. This capacitor may be cut in or out of the circuit as desired by means of a switch (S-3).

Rectifier

The plate, grid, and cathode voltages required for the operation of this receiver are supplied by the RCA-25Z6 rectifier (plates and cathodes connected in parallel respectively) in series with the supply line operating as a half-wave rectifier. The field of the loudspeaker is connected across the input to the filter. The filter circuit consists of reactor L-19 and capacitors C-37 and C-38. An additional capacitance C-36 is connected in parallel with C-37 in models designed for 25-cycle operation.

The filaments of all six tubes are connected in series and are fed direct from the supply line, the voltage being dropped to the required value by resistors R-18 and R-19. The correct operating voltage for the pilot lamp is developed across resistor R-19. This voltage across the pilot lamp will be slightly high when the set is first turned on, but will quickly drop to a normal value as soon as the tube filaments reach their operating temperature.

SERVICE DATA

CAUTION: Grid caps, tuning condenser, and resistor on top of chassis may be hot with respect to external ground and should be avoided when servicing, unless due precautions are taken.

The various diagrams of this bulletin contain such information as will be needed to isolate causes for defective operation when such a condition develops. Ratings of the resistors, capacitors, coils, etc., are indicated adjacent to the symbols signifying these parts on the diagrams. Identification titles, such as R-3, L-2, C-1, etc., are provided for reference between the diagrams and the replacement parts list. Locating of the parts in the schematic circuit is facilitated by the fact that the numerical titles increase from left to right on the diagram. The coils, reactors, and transformer windings are rated in terms of their d-c resistances only.

Alignment Procedure

Precise alignment is vital to the proper functioning of this receiver. There are four trimming adjustments provided in the i-f system, three in the oscillator coil system and two in the antenna coil system. These trimmers have been accurately adjusted during manufacture and should remain properly aligned unless affected by abnormal conditions of climate, or have been altered for service purposes. Incorrect alignment is usually evidenced by loss of sensitivity, improper tone quality and poor selectivity. These indications will generally be present together.

The correct performance of the receiver can only be obtained when the alignment is performed with adequate and reliable test apparatus. The manufacturer of this instrument has a complete assortment of such service equipment available. This equipment may be purchased from authorized distributors and dealers.

An oscillator (signal generator) is required as a source of the specified alignment frequencies. Visual indication of receiver output during the adjustment is necessary to enable the serviceman to obtain an accuracy of alignment which is not possible by listening to the signal. The RCA Victor Stock No. 9595 Full Range Oscillator and the RCA Victor Stock No. 4317 Neon Output Indicator are especially suitable and fulfill the above requirements.

The following procedure should be followed in adjusting the various trimmer capacitors:

I-F Trimmer Adjustments

The four trimmers of the two i-f transformers are located as shown by Figure 4. Each must be aligned to a basic frequency of 460 kc. To do this, attach the output indicator across the voice coil circuit or across the output transformer primary. Connect the output of the test oscillator through a .05 mfd. condenser to the RCA-6A8 control grid. Tune the oscillator to 460 kc. Advance the receiver volume control to its full-on position and adjust the receiver tuning control to a point within its range where no interference is encountered either from local broadcast stations or the heterodyne oscillator. Increase the output of the test oscillator until a slight indication is apparent on the output indicator. Then adjust the two trimmers, C-23 and C-24, of the second i-f transformer to produce maximum (peak) indicated receiver output. Then, adjust the two trimmers, C-20 and C-21, of the first i-f transformer for maximum (peak) receiver output as shown by the indicating device. During these adjustments, regulate the test oscillator output so that the indication is always as low as possible. By doing so, broadness of tuning due to A.V.C. action will be avoided. It is advisable to repeat the adjustment of all i-f trimmers a second time to assure that the interaction between them has not disturbed the original adjustment.

R-F Trimmer Adjustments

The two trimmers, which are at all times directly in shunt with the variable tuning condenser, necessitate that the high-frequency range (Band C) be aligned first. The range selector switch should, therefore, be turned to its Band C position for the initial adjustment. The output indicator should be left connected to the output system and the volume control kept at maximum. Attach the output terminals of the test oscillator to the antenna and ground terminals of the receiver input.

Calibrate the dial by rotating the tuning control until the variable condenser plates are in their full mesh (maximum capacity) position and adjusting the dial pointer so that its end points to the horizontal graduation (approximately 530 kc) at the low-frequency end of the Band A scale.

Proceed further as follows:

(a) Adjust the test oscillator to 18,000 kc. and set the receiver tuning control to a dial reading of 18,000 kc.

(b) Regulate the output of the test oscillator until a slight indication is perceptible at the receiver output. Then adjust the trimmer C-13 on the oscillator section of the variable condenser to the point at which it produces maximum indicated receiver output. Two points may be found, each of which produces such a maximum. The one of *maximum trimmer capacitance* is correct and should be used. (The oscillator will be 460 kc. below the signal frequency at this adjustment point.)

(c) Adjust the trimmer C-5 of the antenna section of the variable condenser, simultaneously rocking the receiver tuning control backward and forward through the 18,000 kc. input signal, until maximum receiver output results from these combined operations. Rocking of the variable condenser will prevent inaccurate adjustment, which would otherwise be caused by the interaction between the heterodyne oscillator circuit and the antenna tuned circuit.

(d) Change the receiver range selector to its Band A position and set the receiver tuning control to a dial reading of 1400 kc. Tune the test oscillator to this same frequency and regulate its output to produce a slight indication on the receiver output indicating device.

(e) Adjust the high-frequency trimmers of the Band A oscillator and antenna coils, C-14 and C-7 respectively, to the points at which each produces maximum indicated receiver output.

(f) Shift the test oscillator frequency to 600 kc. and tune the receiver to pick up this signal, disregarding the dial reading at which it is best received.

(g) Tune the low-frequency trimmer C-16 of the oscillator Band A coil, simultaneously rocking the tuning control of the receiver backward and forward through the signal, until maximum indicated receiver output results from these combined operations. The adjustment of C-14 and C-7 should be corrected at 1400 kc. to compensate for any changes caused by the adjustment of the low-frequency oscillator coil trimmer.

Radiotron Socket Voltages

The voltage values indicated from the Radiotron socket contacts and grid caps to –B ground bracket on Figure 4 will assist in the location of causes for faulty operation. Each value as specified should hold within ± 20% when the receiver is normally operative at its rated line voltage. Variations in excess of this limit will usually be indicative of trouble in the basic circuits. These voltages were measured with set tuned to approximately 900 kc. (Band A) no signal being received and volume control at minimum. To duplicate the conditions under which the voltages were measured requires a 1000-ohm-per-volt d-c meter, having ranges of 10, 50 and 250 volts. Voltages below 10 read on 10-volt scale, between 10 and 50 on 50-volt scale, and between 50 and 250 on 250-volt scale. A-C voltages were measured with a corresponding a-c meter.

Wave Trap Adjustment

With the receiver in operation using its normal antenna, tune station selector to the point at which the intermediate frequency interference is most intense. Then adjust the wave trap trimmer to the point which causes maximum suppression of the interference.

©John F. Rider, Publisher

MODELS T6-7, C6-8 — RCA MFG. CO., INC. — Parts List

Stock No.	DESCRIPTION	List Price
	RECEIVER ASSEMBLIES	
5237	Bushing—Variable tuning condenser mounting bushing assembly—Package of 3	$0.43
11350	Cap—Grid contact cap—Package of 5	.20
11465	Capacitor—Adjustable capacitor—(C16)	.48
11291	Capacitor—115 Mmfd.—(C11)	.24
5116	Capacitor—175 Mmfd.—(C30)	.18
11290	Capacitor—400 Mmfd.—(C3, C9)	.25
11449	Capacitor—1350 Mmfd.—(C4)	.26
11622	Capacitor—3000 Mmfd.—(C10, C15)	.36
11287	Capacitor—4500 Mmfd.—(C17)	.30
5196	Capacitor—.035 Mfd.—(C33)	.18
4858	Capacitor—.01 Mfd.—(C2, C27, C31, C34)	.25
11395	Capacitor—.01 Mfd.—(C26)	.18
4886	Capacitor—.05 Mfd.—(C35)	.20
4840	Capacitor—0.25 Mfd.—(C28)	.30
5170	Capacitor—0.25 Mfd.—(C8, C35)	.25
4839	Capacitor—0.1 Mfd.—(C18)	.28
4841	Capacitor—0.1 Mfd.—(C22, C29)	.22
5212	Capacitor—18 Mfd.—(C19)	1.16
11821	Capacitor Pack—Comprising one 24 Mfd., one 16 Mfd., and one 10 Mfd. sections—(C32, C37, C38)	3.60
11617	Coil—Antenna coil—(L2, L3, L4, L5, C7, R1)	1.68
11618	Coil—Oscillator coil—(L6, L7, L8, L9, L10, L11, C14)	2.22
11612	Condenser—2-gang variable tuning condenser—(C5, C6, C12, C13)	3.80
11979	Connector—2-contact male connection plug	.30
11974	Dial—Station selector dial scale	.65
11613	Drive—Variable tuning condenser drive	1.00
11893	Indicator—Station selector indicator pointer	.28
4340	Lamp—Dial lamp—Package of 5	.60
11818	Reactor—Filter reactor—(L19)	1.85
11977	Resistor—Wire wound—Comprising one 100- and one 40-ohm section—(R18, R19)	$0.58
11624	Resistor—22 ohms—Flexible type—complete with contact cap—(R2)	.22
11955	Resistor—27 ohms—Carbon type—¼ watt—(R21)—Package of 5	1.00
11372	Resistor—47 ohms—Carbon type—¼ watt—(R20)—Package of 5	1.00
5159	Resistor—2,200 ohms—Carbon type—¼ watt—(R6)—Package of 5	1.00
3998	Resistor—15,000 ohms—Carbon type—¼ watt—(R5)—Package of 5	1.00
11400	Resistor—27,000 ohms—Carbon type—¼ watt—(R12)—Package of 5	1.00
3118	Resistor—100,000 ohms—Carbon type—¼ watt—(R4, R17)—Package of 5	1.00
11323	Resistor—270,000 ohms—Carbon type—¼ watt—(R15)—Package of 5	1.00
11847	Resistor—390,000 ohms—Carbon type—¼ watt—(R16)—Package of 5	1.00
11811	Resistor—680,000 ohms—Carbon type—¼ watt—(R10)—Package of 5	1.00
11980	Resistor—680,000 ohms—Carbon type—1/10 watt—(R3, R13)—Package of 5	.75
11981	Resistor—1.5 megohms—Carbon type—1/10 watt—(R14)—Package of 5	.75
11626	Resistor—2.2 megohms—Carbon type—¼ watt—(R9)—Package of 5	1.00
11603	Shield—Antenna or oscillator coil shield	.26
11390	Shield—Intermediate frequency transformer shield	.25
3529	Socket—Dial lamp socket	.32
11198	Socket—7-contact 6J7, 25Z6 or 25A6 Radiotron socket	.15
11196	Socket—8-contact 6H6, 6K7 or 6A8 Radiotron socket	.15
11614	Spring—Coil spring for large gears on variable tuning condenser—Package of 10	.70
11975	Switch—Range switch—(S1)	$0.95
11460	Switch—Tone control and power switch—(S2, S3)	.95
5238	Terminal—Antenna terminal board with clip insulating strip and rivets	.14
11976	Terminal—Ground terminal clip assembly	.15
11388	Transformer—First intermediate frequency transformer—(L12, L13, C20, C21)	1.90
11389	Transformer—Second intermediate frequency transformer—(L14, L15, C23, C24, C25, R7, R8)	3.02
11391	Trap—Wave trap—(L1, C1)	1.22
11237	Volume control—(R11)	1.20
	REPRODUCER ASSEMBLIES CONSOLE MODEL	
11232	Board—Terminal board assembly	.18
11231	Bolt—Yoke and core assembly bolt and nut	.16
8060	Bracket—Output transformer mounting bracket	.14
11257	Clamp—Cone center suspension clamping nut and screw assembly—Package of 5	.25
11827	Coil—Field coil—(L18)	1.92
11469	Coil—Neutralizing coil—(L17)	.20
11258	Cone—Reproducer cone complete—(L16)—Package of 5	3.85
5118	Connector—Three-contact male connector for reproducer	.25
5119	Connector—Three-contact female connector for reproducer cable	.25
11828	Transformer—Output transformer—(T1)	1.46
11886	Washer—Spring washer—used to hold speaker field coil securely—Package of 5	.20
	REPRODUCER ASSEMBLIES TABLE MODEL	
11827	Coil—Field coil—(L18)	$1.92
11235	Cone—Reproducer cone—(L16)—Package of 5	3.50
5118	Connector—Three-contact male connector for reproducer	.25
5119	Connector—Three-contact female connector for reproducer cable	.25
11826	Reproducer complete	6.50
11828	Transformer—Output transformer—(T1)	1.46
	MISCELLANEOUS ASSEMBLIES	
11823	Cord—Power cord and connector assembly	.65
11376	Escutcheon—Station selector escutcheon and crystal	.70
11609	Knob—Range switch knob—Package of 5	.52
11973	Knob—Station selector knob assembly—comprising one large and one small knob—Package of 5	.90
11455	Knob—Volume control or tone control knob—Package of 5	.48
11210	Screw—Chassis mounting screw assembly for Console Model—Package of 4	.28
11377	Screw—Chassis mounting screw assembly for Table Model—Package of 4	.12
11348	Screw—8-32 x 7/16" headless cupped-point set screw for small knob in Stock No. 11973—Package of 10	.32
11349	Spring—Retaining spring for knobs—Stock No. 11455 and No. 11609—Package of 5	.15
4982	Spring—Retaining spring for large knobs—Stock No. 11973—Package of 10	.26

The prices quoted above are subject to change without notice.

©John F. Rider, Publisher

Socket, Trimmers

RCA MFG. CO., INC.

MODELS T6-11, C6-12
Schematic, Voltage

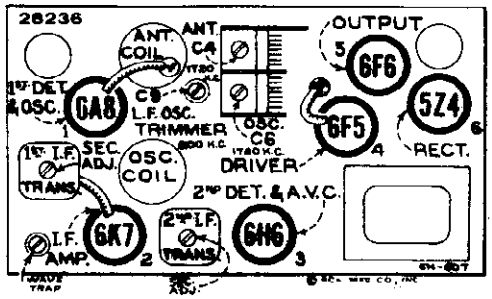

Figure 3—Radiotron and Coil Locations

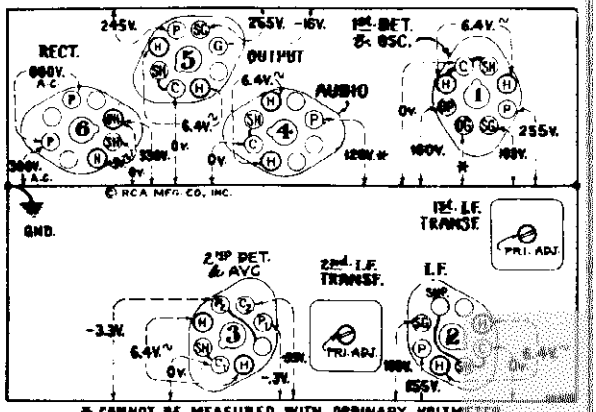

Measured at 115 volts, 60 cycle supply

Figure 6—Radiotron Socket Voltages

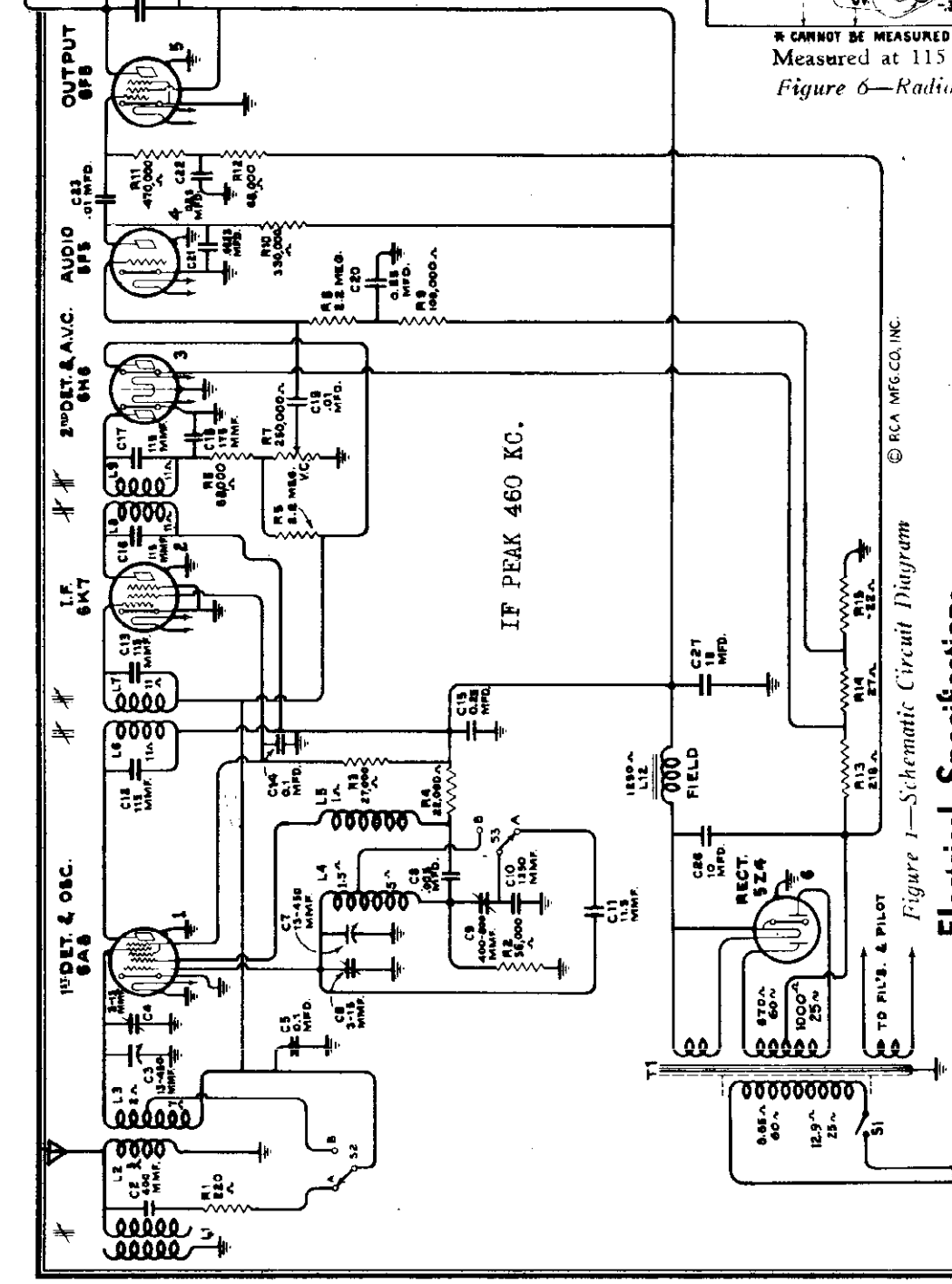

Figure 1—Schematic Circuit Diagram

Electrical Specifications

FREQUENCY RANGES

Broadcast Band (A) ..... 540-1,850 kc.
Short-wave Band (B) ..... 1,850-6,900 kc.

POWER SUPPLY RATINGS

Rating A ..... 105-125 Volts, 50-60 Cycles, 75 Watts
Rating B ..... 105-125 Volts, 25-60 Cycles, 75 Watts
Rating C ..... 100-130/140-160/195-250 Volts, 40-60 Cycles, 75 Watts

POWER OUTPUT RATINGS

Undistorted ..... 2.0 Watts
Maximum ..... 4.5 Watts

ALIGNMENT FREQUENCIES

Band (A) ..... 600 kc. (osc.), 1,720 kc. (osc., ant.)
Band (B) ..... No Adjustments Required

LOUDSPEAKER

Type ..... Electrodynamic
Voice Coil Impedance ..... 2.25 Ohms at 400 Cycles

©John F. Rider, Publisher

MODELS T6-11, C6-12
Chassis Wiring

RCA MFG. CO., INC.

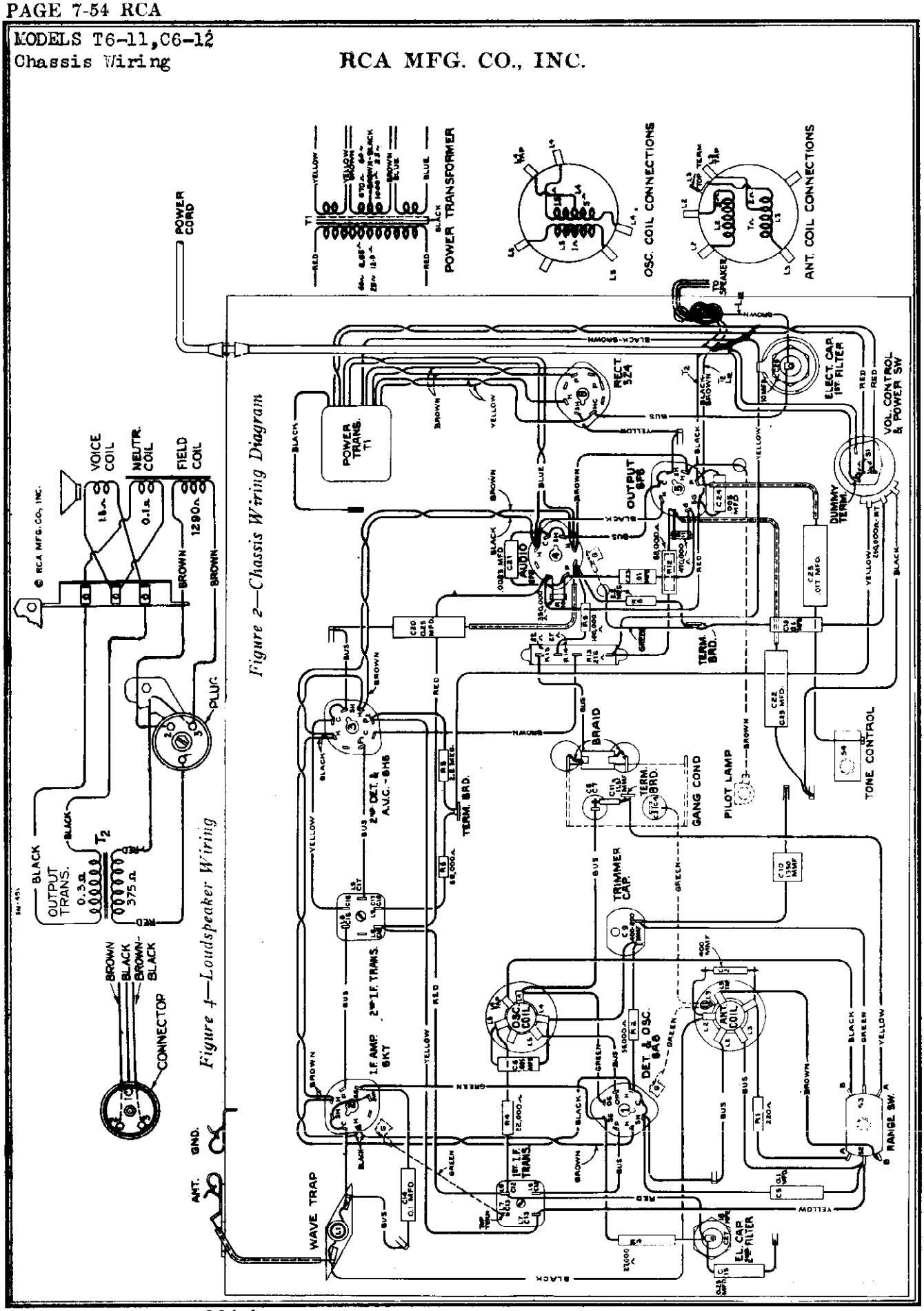

Figure 2—Chassis Wiring Diagram

Figure 4—Loudspeaker Wiring

©John F. Rider, Publisher

RCA MFG. CO., INC.

MODELS T6-11, C6-12
Circuit Data, Alignment Transformer. Parts

General Features

These receivers each employ the same chassis and have many distinctive features. Model T6-11 employs an 8-inch dynamic loudspeaker and Model C6-12 employs a 12-inch dynamic loudspeaker.

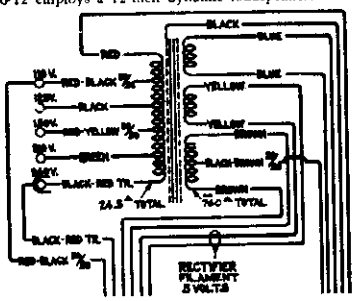

An adjustable wave trap, in parallel with the antenna input, serves to suppress code interference which may be encountered in certain localities from intermediate frequency radio telegraph signals.

The first detector and oscillator functions are accomplished in a single tube, an RCA-6A8. The input of this tube is coupled to the antenna through a tuned transformer. A shunt (permeability tuned) wave trap is connected across the primary of this transformer to prevent signals of intermediate frequency (460 kc.) from being introduced into the first stage as interference. The two-section gang condenser, which tunes the antenna transformer secondary and the heterodyne oscillator coil, has adjustable trimmers for obtaining exact alignment. Each of these coils is tapped so that the range switch increases the range of tuning by decreasing the amount of inductance.

Circuit Arrangement

The intermediate frequency stage is coupled to the RCA-6A8 and to the RCA-6H6 by means of tuned transformers. These transformers resonate with fixed capacitors and are tuned by molded cores to 460 kc.

The modulated signal as obtained from the output of the i-f system is detected by an RCA-6H6 twin-diode tube. Audio frequency secured by this process is passed on to the a-f system for amplification and final reproduction. The d-c voltage, which results from detection of the signal, is used for automatic volume control. This voltage, which develops across the volume control resistor R-7, is applied as automatic control grid bias to the first detector and i-f tubes through a suitable resistance filter. The second diode of the RCA-6H6 is used to supply residual bias for the controlled tubes under conditions of little or no signal. This auxiliary diode, under such conditions, draws current which flows through resistors R-5 and R-7, thereby maintaining the desired minimum operating bias on such tubes. On application of signal energy above a certain level, however, the auxiliary bias diode ceases to draw current and the a.v.c. diode takes over the biasing function.

Manual volume control is effected by means of an acoustically tapered potentiometer connected as a variable coupling element between the output of the second detector and the first audio control grid. After amplification by the RCA-6F5, the audio signal is transmitted by resistance-capacitance coupling to the input of the RCA-6F6 power output stage, which, in turn, is transformer-coupled to the dynamic speaker. High-frequency tone control is provided by means of a shunt capacitor across the plate circuit of the output tube, which may be cut in or out of the circuit with a control switch (S-4).

The power supply system consists of an RCA-5Z4 rectifier tube which is supplied from an efficiently designed power transformer and which works into a suitable filter. The various potentials required for the plate, screen, control grid, and cathode circuits are obtained from the output of the filter. The electrodynamic loudspeaker field coil is used as a filter reactor.

SERVICE DATA

The various diagrams of this booklet contain such information as will be needed to isolate causes for defective operation when such develops. The ratings of the resistors, capacitors, coils, etc., are indicated adjacent to the symbols signifying these parts on the diagrams. Identification titles, such as R-3, L-2, C-1, etc., are provided for reference between the illustrations and the Replacement Parts List. The coils, reactors, and transformer windings are rated in terms of their d-c resistances only. Ratings of less than one ohm are generally omitted.

Alignment Procedure

There are three alignment trimmers provided in the antenna transformer and oscillator coil tuned circuits. The i-f transformer adjustments are made by means of screws attached to molded cores. All of these circuits have been accurately adjusted during manufacture and should remain properly aligned unless affected by abnormal conditions or altered during servicing. Loss of sensitivity, improper tone quality, and poor selectivity are the usual indications of improper alignment.

The correct performance of this receiver can only be obtained when the aligning has been done with adequate and reliable apparatus. The manufacturer of this receiver has available, for sale through its distributors and dealers, a complete assortment of such service equipment as may be needed for the alignment operation.

An oscillator is required as a source of the specified alignment frequencies. Visual indication of receiver output during the adjustment is necessary and should be accomplished by the use of an indicator.

The following method of procedure should be followed in adjusting the various trimmer capacitors and molded cores:

I-F Core Adjustments

The four adjustment screws (attached to molded cores) of the two i-f transformers (one on top and one on bottom of each i-f transformer) are located as shown by Figures 3 and 6. Each circuit must be aligned to a basic frequency of 460 kc. To do this, attach the output indicator across the loudspeaker voice coil or across the output transformer primary. Connect the output of the test oscillator between the control grid of the RCA-6A8 and chassis ground. Tune the oscillator to 460 kc. Advance the receiver volume control to its full-on position and adjust the receiver tuning control to a point, within its range, where no interference is encountered either from local broadcast stations or from the heterodyne oscillator. Increase the output of the test oscillator until a slight indication is present on the output indicator. Then, adjust the two screws of the second i-f transformer to produce maximum (peak) indicated receiver output. Then, adjust the two screws of the first i-f transformer for maximum (peak) receiver output as shown by the indicating device. During these adjustments, regulate the test oscillator output so that the indication is always as low as possible. By doing so, broadness of tuning due to a.v.c. action will be avoided. It is advisable to repeat the adjustment of all i-f screws to assure that the interaction between them has not disturbed the original adjustment.

R-F Trimmer Adjustments

Calibrate the tuning dial by setting pointer to horizontal line at low-frequency end of broadcast band scale while variable condenser is at maximum capacity.

The output indicator should be left connected to the output system. Attach the output of the test oscillator between the antenna and ground terminals of the receiver input. Adjust the oscillator to 1,720 kc. and set the receiver tuning control to a dial reading of 1,720 kc. Leave the volume control of the receiver at its maximum position. Make sure that the range selector is at its broadcast position. Regulate the output of the test oscillator until a slight indication is perceptible at the receiver output. Then adjust the two trimmers, C-6 and C-4, of the oscillator and antenna transformer coils (mounted on the variable condenser) so that each produces maximum (peak) receiver output. After this maximum has been accurately obtained, shift the test oscillator to 600 kc. Tune the receiver to pick up this signal, disregarding the dial reading at which it is best received. Then, adjust the receiver oscillator series trimmer, C-9, simultaneously rocking the tuning control backward and forward through the signal until maximum receiver output results from these combined operations. The adjustment at 1,720 kc. should then be repeated to correct for any change which may have been caused by the oscillator series trimmer adjustment.

Radiotron Socket Voltages

Voltage values indicated at the Radiotron socket contacts on Figure 6 form a reference basis for test of the receiver. It is to be noted that all voltages are given with respect to chassis ground, excepting those appearing across the heaters (H-H). The values shown are obtainable when the receiver is in normal operating condition, with all tubes intact. They do not take into account inaccuracy caused by the resistance of the voltmeter used for the tests, the lower the voltmeter resistance the lower the degree of accuracy. Allowance must, therefore, be made, dependent upon the type of test instrument used, for the loading effect of the voltmeter on the circuit.

Wave-Trap Adjustment

With the receiver in operation using its normal antenna, tune station selector to the point at which the intermediate frequency interference is most intense. Then adjust the wave trap screw (core) to the point which causes maximum suppression of the interference.

The prices quoted above are subject to change without notice.

Stock No.	DESCRIPTION	List Price
	RECEIVER ASSEMBLIES	
5237	Bushing—Variable tuning condenser mounting bushing assembly—Package of 3	$0.63
11350	Cap—Grid contact cap—Package of 5	.20
11465	Capacitor—Adjustable capacitor—(C9)	.48
11450	Capacitor—11.5 Mmfd.—(C11)	.14
11998	Capacitor—115 Mmfd.—(C12, C13, C16, C17)	.28
11500	Capacitor—175 Mmfd.—(C18)	.18
4297	Capacitor—400 Mmfd.—(C2)	.30
11449	Capacitor—1,350 Mmfd.—(C10)	.26
5107	Capacitor—.0025 Mfd.—(C21)	.16
4868	Capacitor—.005 Mfd.—(C8, C24)	.20
4858	Capacitor—.01 Mfd.—(C19, C23)	.25
11451	Capacitor—.017 Mfd.—(C25)	.18
4840	Capacitor—.25 Mfd.—(C20, C22)	.30
5170	Capacitor—.25 Mfd.—(C15)	.25
4841	Capacitor—.1 Mfd.—(C5)	.22
4835	Capacitor—.1 Mfd.—(C14)	.28
11240	Capacitor—10 Mfd.—(C26)	1.08
5212	Capacitor—18 Mfd.—(C27)	1.16
11462	Coil—Antenna coil—(L2, L3)	1.85
11463	Coil—Oscillator coil—(L4, L5)	1.65
11457	Condenser—2-gang variable tuning condenser—(C3, C4, C6, C7)	3.46
12006	Core—Adjustable core for wave trap stock No. 12005 and i-f transformer stock Nos. 12002 and 12003	.22
11583	Dial—Station selector dial scale	.40
12042	Drive—Vernier drive for tuning condenser stock No. 11457	.35
11467	Indicator—Station selector indicator pointer	.10
5226	Lamp—Dial lamp—Package of 5	.70
12004	Resistor—Voltage divider resistor—comprising one 216-ohm, one 27-ohm, and one 22-ohm sections—(R13, R14, R15)	.45
11174	Resistor—220 ohms—carbon type—½ watt—(R1)—Package of 5	1.00
8070	Resistor—22,000 ohms—carbon type—½ watt—(R4)—Package of 5	1.00
12011	Resistor—27,000 ohms—carbon type—1 watt—(R3)—Package of 5	1.10
5029	Resistor—56,000 ohms—carbon type—½ watt—(R2)—Package of 5	1.00
12009	Resistor—68,000 ohms—carbon type—½ watt—(R12)—Package of 5	1.00
12010	Resistor—68,000 ohms—carbon type—1/10 watt—(R6)—Package of 5	.75
5118	Resistor—100,000 ohms—carbon type—½ watt—(R9)—Package of 5	1.00
11297	Resistor—330,000 ohms—carbon type—1/10 watt—(R10)—Package of 5	.75
11452	Resistor—470,000 ohms—carbon type—1/10 watt—(R11)—Package of 5	.75
11626	Resistor—2.2 megohms—carbon type—½ watt—(R5, R8)—Package of 5	1.00
11464	Shield—Antenna or oscillator coil shie'd	.25
12008	Shield—Intermediate frequency transformer shield for stock No. 12002 and 12003	.25
8098	Socket—Dial lamp socket	.10
11195	Socket—5-contact 5Z4 Radiotron socket	$0.15
11198	Socket—7-contact 6K7, 5H6 or 6F5 Radiotron socket	.15
11196	Socket—8-contact 6A8 or 6F6 Radiotron socket	.15
12007	Spring—Retaining spring for adjustable core in stock Nos. 12002, 12003, 12005—Package of 10	.36
11461	Switch—Range switch—(S2, S3)	.56
12001	Switch—Tone control switch—(S4)	.30
5238	Terminal—Antenna terminal clip assembly	.14
12002	Transformer—First intermediate frequency transformer complete with shield—(L6, L7, C12, C13)	1.85
11999	Transformer—Power transformer, 105-125 volts, 50-60 cycles—(T1)	3.80
12132	Transformer—Power transformer, 105-125 volts, 25 to 50 cycles	5.48
12133	Transformer—Power transformer, 110-220 volts, 60 cycles	6.25
12003	Transformer—Second intermediate frequency transformer complete with shield—(L8, L9, C16, C17, C18)	2.05
12005	Trap—Wave trap—(L1)	1.20
12000	Volume control—Volume control and power switch—(R7, S1)	1.12
	MISCELLANEOUS ASSEMBLIES	
11455	Knob—Station selector, volume control, tone control or power switch knob—Package of 5	.48
11456	Screw—Chassis mounting screw assembly—for Model T6-11—Package of 2	.12
11586	Screw—Chassis mounting screw assembly—for Model C6-12—Package of 10	.22
11349	Spring—Retaining spring for knob stock No. 11455—Package of 5	.15
	REPRODUCER ASSEMBLIES	
11232	Board—Terminal board assembly with two lead wire clips	.17
11231	Bolt—Yoke and core assembly bolt and nut	.16
8060	Bracket—Output transformer mounting bracket	.14
11257	Clamp—Cone center suspension clamping nut and screw assembly—Package of 5	.25
12012	Coil—Field coil—(L12)	1.85
11469	Coil—Neutralizing coil—(L10)	.20
11235	Cone—Reproducer cone—(L11)—Package of 5—(Table Model)	3.50
11258	Cone—Reproducer cone—(L11)—Package of 5—(Console Model)	3.85
5116	Connector—3-contact male connector for reproducer	.25
5119	Connector—3-contact female connector for reproducer cable	.25
9638	Reproducer complete—(Table Model)	6.50
9639	Reproducer complete—(Console Model)	6.85
11253	Transformer—Output transformer—(T2)	1.50
11886	Washer—Spring washer used to hold field coil securely—Package of 5	.20

MODELS 7T, 7K, 8T, 8K
Schematic, Socket

RCA MFG. CO., INC.

Trimmers, Phono.

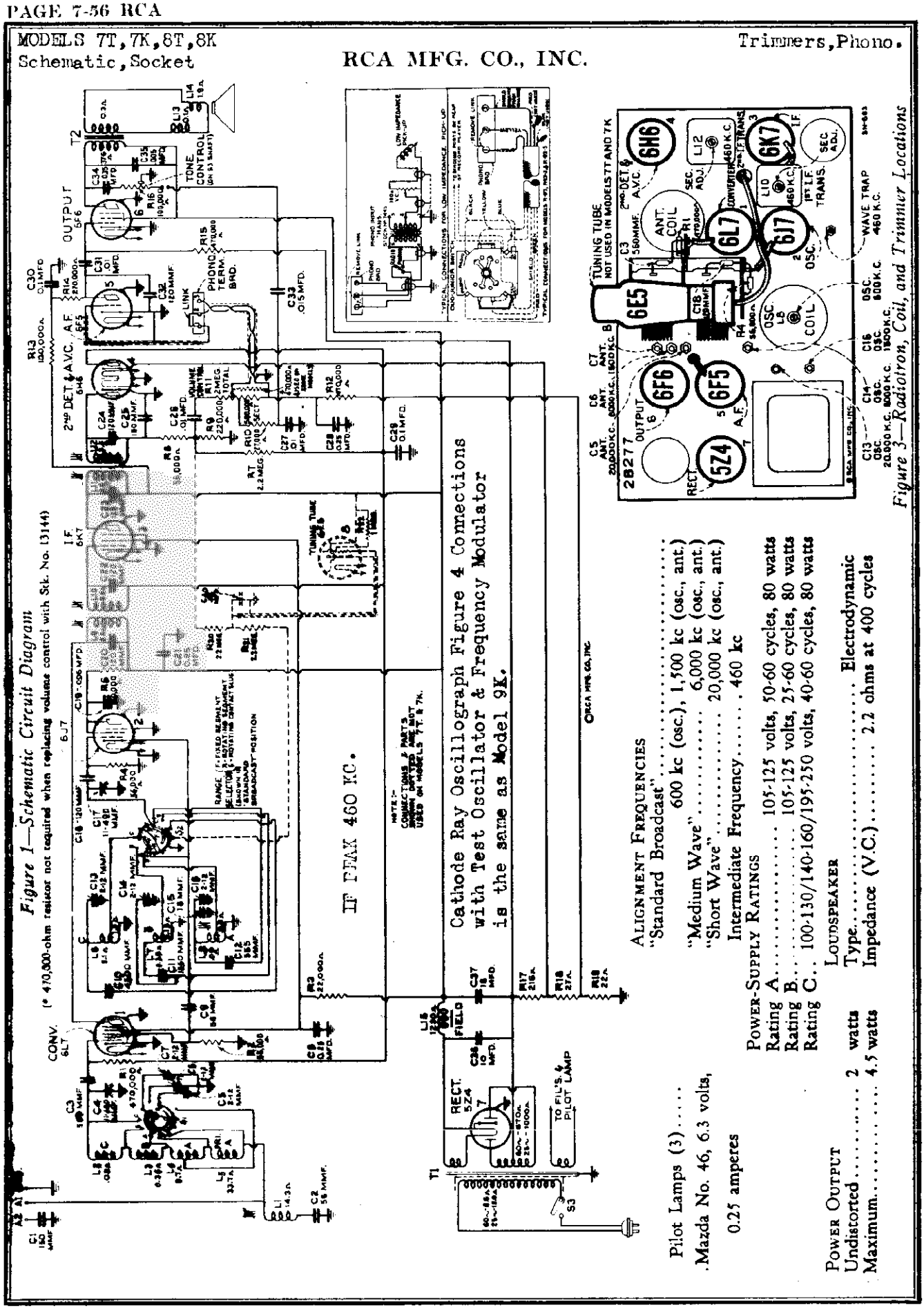

Figure 1—Schematic Circuit Diagram

(* 470,300-ohm resistor not required when replacing volume control with Stk. No. 13144)

Figure 3—Radiotron, Coil, and Trimmer Locations

ALIGNMENT FREQUENCIES

"Standard Broadcast" ..... 600 kc (osc.), 1,500 kc (osc., ant.)

"Medium Wave" ..... 6,000 kc (osc., ant.)

"Short Wave" ..... 20,000 kc (osc., ant.)

Intermediate Frequency ..... 460 kc

POWER-SUPPLY RATINGS

Rating A ..... 105-125 volts, 50-60 cycles, 80 watts

Rating B ..... 105-125 volts, 25-60 cycles, 80 watts

Rating C .. 100-130/140-160/195-250 volts, 40-60 cycles, 80 watts

LOUDSPEAKER

Type ..... Electrodynamic

Impedance (V.C.) ..... 2.2 ohms at 400 cycles

POWER OUTPUT

Undistorted ..... 2 watts

Maximum ..... 4.5 watts

Pilot Lamps (3) .....

Mazda No. 46, 6.3 volts,

0.25 amperes

©John F. Rider, Publisher

RCA MFG. CO., INC.

MODELS 7T,7K,8T,8K
Chassis Wiring

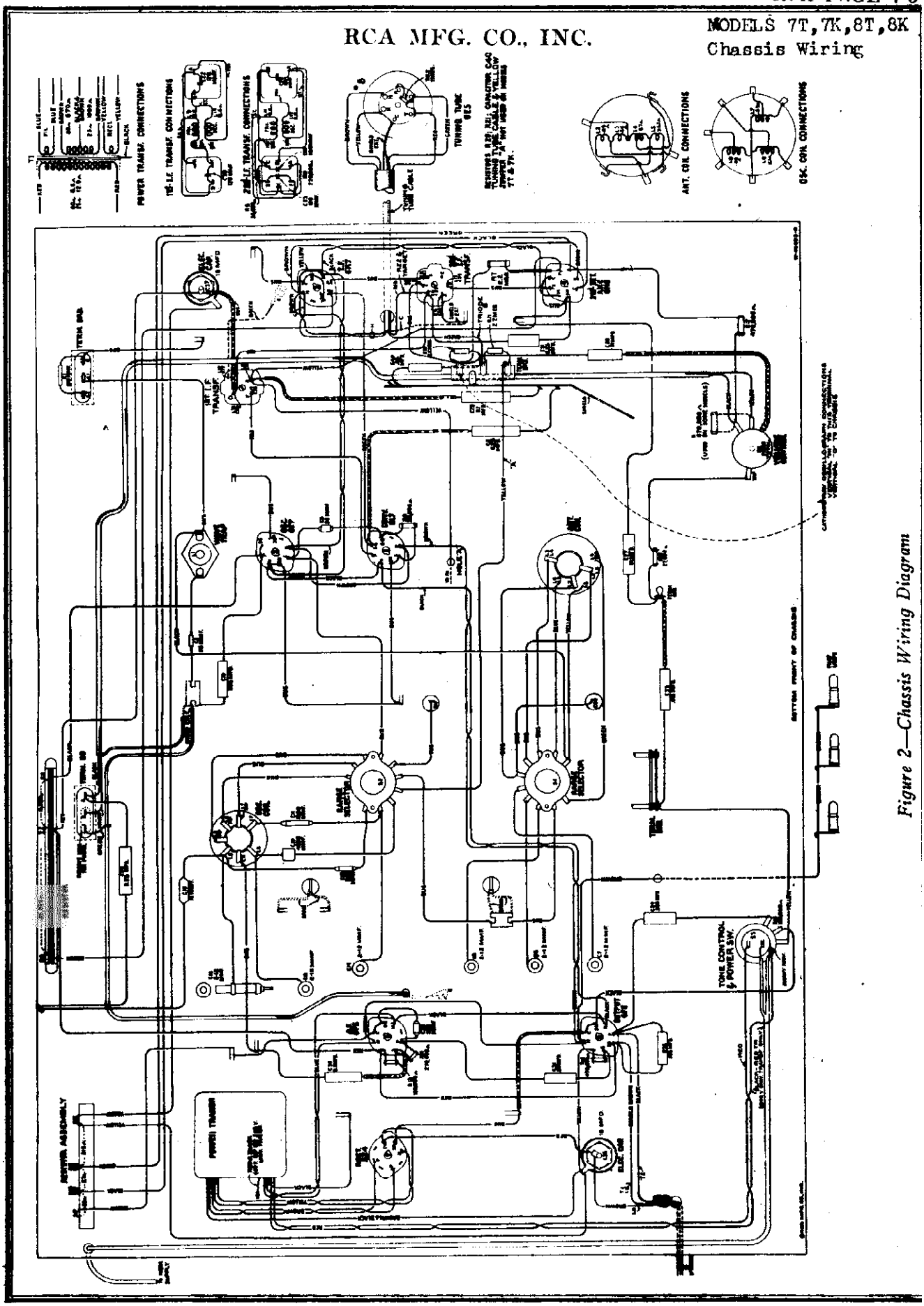

Figure 2—Chassis Wiring Diagram

©John F. Rider, Publisher

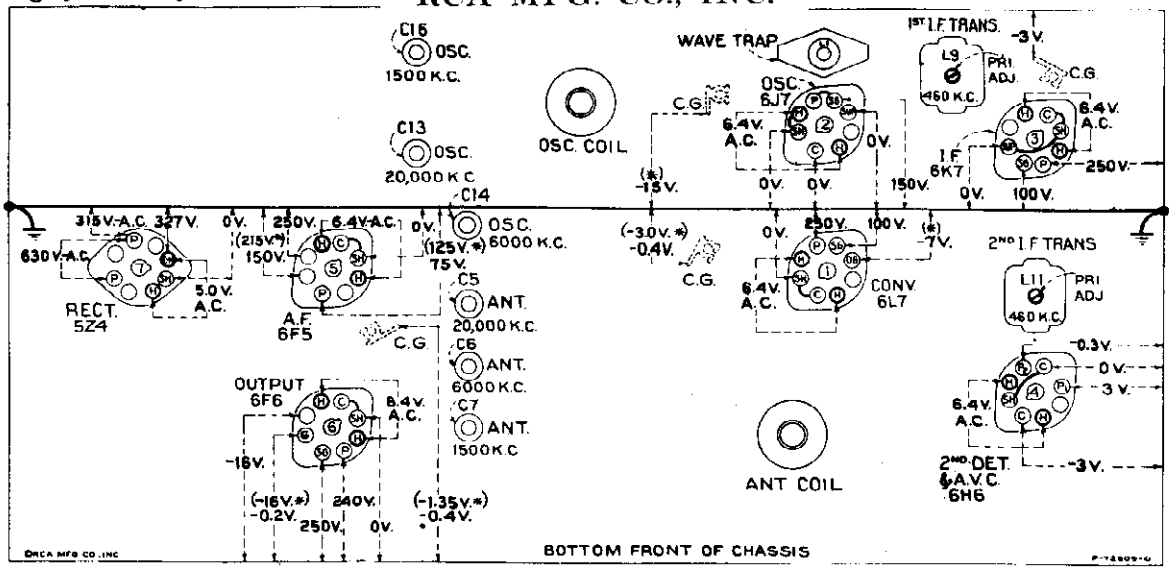

Figure 7—Radiotron Socket Voltages, Coil, and Trimmer Locations

Measured at 115 volts, 60-cycle supply—Tuned to approximately 1,000 kc—No signal being received—Volume control minimum

Radiotron Socket Voltages

Note: *Two voltage values are shown for some readings. The higher value shown in parenthesis with asterisk (*) indicates operating conditions without voltmeter loading. The lower value is the actual measured voltage and differs from the higher value because of the additional loading of the voltmeter through the high series circuit resistance.*

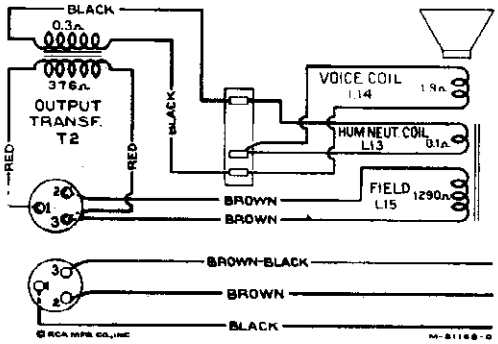

Figure 5—Loudspeaker Wiring

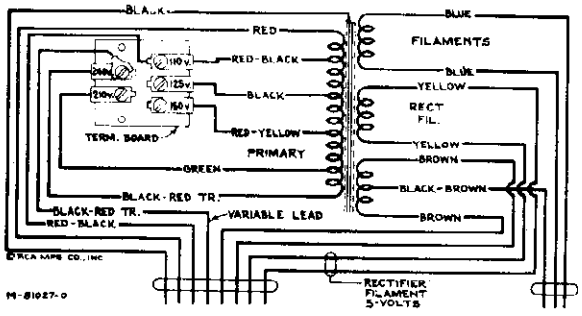

Primary resistance—24.5 ohms total
Secondary resistance—668 ohms total

Figure 8—Universal Transformer

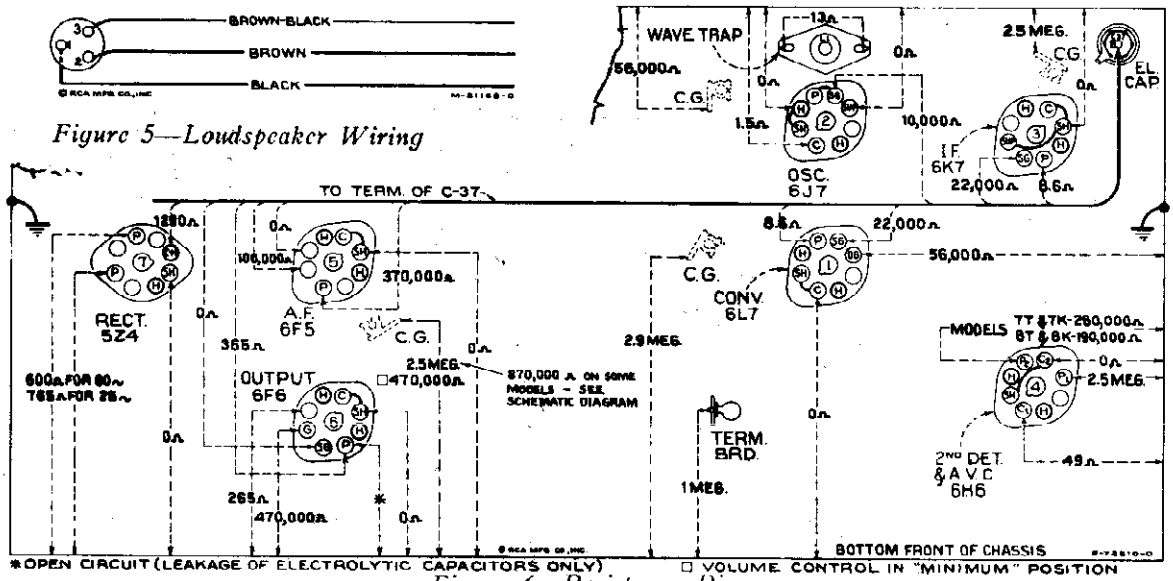

Figure 6—Resistance Diagram

Power supply disconnected—Radiotrons in sockets—Tuning condenser in full-mesh—Range selector in "Standard broadcast" position—Volume control maximum

©John F. Rider, Publisher

©John F. Rider, Publisher

General Description

These receivers represent the result of thorough development, design, and substantial manufacture. Noteworthy technical improvements have been applied in achieving marked advantages of operation and efficiency of performance.

Model 7T is a seven-tube, table-type, superheterodyne receiver with an eight-inch electrodynamic loudspeaker. Model 7K differs from the Model 7T in that it is of the console type and has a twelve-inch electrodynamic loudspeaker.

Models 8T and 8K are similar to Models 7T and 7K respectively, except for the addition of a tuning tube "Magic Eye" and different cabinet designs.

Design features incorporated in these receivers include: built-in doublet antenna coupler; improved plunger-type air-dielectric adjustable trimming capacitors in the antenna and oscillator coil circuits; high-efficiency first detector (converter) with separate oscillator; magnetite core adjusted i-f transformers, low-frequency oscillator tracking, and wave-trap; aural compensated volume control; continuously variable tone control with music-voice switch; automatic volume control; phonograph terminal board; band selective indication of dial scales; and a dust-proof electrodynamic loudspeaker.

The tuning range is continuous through the "Standard broadcast," "Medium wave," and "Short wave" bands. This extensive range includes the important short-wave broadcast bands at 49, 31, 19, 16, and 13 meters in addition to channels assigned for police, amateur, and aviation communication. Trimming adjustments are located at accessible points. Their number is reduced to the least that is consistent with efficient operation. A double tuning knob arrangement permits the choice of either a ten-to-one or a fifty-to-one dial ratio, the latter permits ease of tuning, especially in the "Medium wave" and "Short wave" bands.

Circuit Arrangement

The conventional type of superheterodyne circuit is used. It consists of a first-detector (converter) stage, separate oscillator stage, a single i-f stage, a diode-detector — automatic-volume-control stage, an audio voltage-amplifier stage, a pentode power-output stage, and a full-wave rectifier stage. Models 8T and 8K also have a tuning indicator "Magic Eye."

A single-wire antenna, or a doublet antenna, when connected to the proper input terminals of the receiver, is coupled to control grid No. 1 of the RCA-6L7 through a tuned r-f transformer. This transformer is tapped so that the range selector increases the range of tuning by decreasing the amount of inductance. A unique method of switching causes L5 to become the primary with L4, L3, and L2 as secondary, L4 to become the primary with L3 and L2 as secondary, and L3 to become the primary with L2 as secondary, for range selector positions "Standard broadcast," "Medium wave," and "Short wave" respectively. Separate windings are employed in the oscillator stage for each position of the range selector. All unused portions of the antenna and oscillator coils are shorted out to prevent undesirable interaction. Air-dielectric trimming capacitors are used for obtaining exact alignment. Proper low-frequency tracking of the oscillator for "Standard broadcast" is accomplished by adjusting the inductance of the respective coil with a molded magnetite core.

The intermediate-frequency amplifier consists of an RCA-6K7 in a transformer-coupled circuit. The windings of these transformers are resonated with fixed capacitors, and are adjusted by molded magnetite cores (both primary and secondary) to tune to **460 kc.**

Detector and A.V.C.

The modulated signal as obtained from the output of the i-f stage is detected by an RCA-6H6 twin-diode tube. The audio frequency secured by this process is transferred to the a-f system for amplification and final reproduction. The d-c voltage which results from detection of the signal is used for automatic volume control. This voltage, which develops across resistor R9, is applied as automatic control-grid bias to the first-detector and i-f tubes. The second (auxiliary) diode of the RCA-6H6 is used to supply residual bias for the controlled tubes under conditions of little or no signal. This diode, under such conditions, draws current which flows through resistors R7 and R9, thereby maintaining the desired operating bias on such tubes. On application of signal energy above a certain level, however, the auxiliary bias-diode ceases to draw current and the a.v.c.-diode takes over the biasing function.

Audio System

The manual volume control consists of an acoustically tapered potentiometer in the audio circuit between the output of the detector diode and the input grid of the audio voltage-amplifier tube. This control has a tone-compensating filter connected to it so that the correct aural balance will be obtained at different volume settings. Phonograph terminals are inserted at this point for feeding the output of an external phonograph pickup to the control grid of the audio amplifier. Resistance-capacity coupling is used between the first-audio stage and the power-output stage. The power-output stage is transformer-coupled to the electrodynamic loudspeaker. Continuously-variable tone control is effected by means of capacitor C24 and variable resistor R16 shunting the plate circuit of the output tube. Extreme clockwise rotation of this tone control disconnects the resistor R16 from the circuit and places an additional capacitor C33 in shunt with capacitor C27, thereby reducing the low-frequency response of the amplifier. This point is known as the "Speech" position and provides optimum intelligibility of speech.

Tuning Indicator (Models 8T and 8K only)

An RCA-6E5 cathode-ray tuning tube is used as a means of visually indicating when the receiver is accurately tuned to the incoming signal. This tube consists of an amplifier section and a cathode-ray section built in the same glass envelope. Maximum sensitivity of the tuning indicator is acquired in the "Short wave" position of the range selector S2 by removing the ground connection from resistor R21. In this position, resistors R20 and R21 no longer act as a voltage divider and maximum voltage is applied to the grid of the tuning tube.

SERVICE DATA

Alignment Procedure

There are eight adjustments required for the alignment of the antenna, oscillator, and wave-trap tuned circuits. Six of these adjustments are made with plunger-type air trimming capacitors, and require the use of an **RCA Stock No. 12636 adjusting tool.** The other two adjustments are screws attached to molded magnetite cores and are used to adjust the wave-trap and to align the oscillator at **600 kc.** Before adjusting the plunger-type air trimmers, they must be unlocked by loosening their hexagon lock nuts. The lock nuts should be tightened upon completion of adjustments.

The i-f transformer adjustments are made by means of four screws attached to molded magnetite cores.

All of the adjustable circuits of this receiver have been properly aligned at the factory to give correct performance, and their settings should remain intact indefinitely when the receiver is used under ordinary conditions. However, necessity for re-adjustment may occasionally occur from continued extremes of temperature, climate, tampering, or purported alteration for services, or after repairs have been made to the r-f or i-f tuned circuits. Improper alignment usually causes the impairment of sensitivity, selectivity, and tone quality. Such conditions will generally exist simultaneously.

In re-adjusting the tuned circuits, it is important to apply a definite procedure and to use adequate and reliable test equipment. A standard test oscillator, such as an **RCA Stock No. 9595,** will be required as the source of signal at the specified alignment frequencies. Means for indication of the receiver output during alignment is also necessary to accurately show when the correct point of adjustment is reached. Two indication methods are applicable—one requires use of the cathode-ray oscillograph, and the other requires a voltmeter or glow-type indicator. The cathode-ray alignment method is advantageous in that the indication provided is in the form of a wave image which represents the resonance characteristics of the circuits being tuned. This type of alignment is possible through use of apparatus such as the **RCA Stock No. 9558 Frequency Modulator** and the **RCA Stock No. 9545 Cathode-Ray Oscillograph.** The output indicator method should be performed with an instrument such as the **RCA Stock No. 4317 Neon Glow Indicator.** The two procedures are outlined as follows:

Cathode-Ray Alignment

Make alignment apparatus connections shown on figure 4. Remove the plug of the frequency modulator cable from the test oscillator jack. Connect the receiver chassis to a good external ground. Connect oscillograph "Vertical" input terminals as indicated on figure 2. Set oscillograph power switch to "On" and adjust "Intensity" and "Focus" controls to give a clearly defined spot, or line, on the screen. Set oscillograph "Ampl. A" switch to "On," "Vertical gain" control full clockwise, "Ampl. B" switch to "Timing," "Range" switch to No. 2 position, and "Timing" switch to "Int." Place the "Sync." control, "Freq." control, and "Horizontal gain" control to about their mid-positions. For each of the following adjustments, the test oscillator output must be regulated so that the image obtained on the oscillograph screen will be of the minimum size for accurate observation. The receiver volume control setting is optional.

I-F Adjustments

(a) Connect the "Ant." output of the test oscillator to the grid cap of **RCA-6K7** (with grid lead in place) through a **.001-mfd.** capacitor, with "Gnd." to receiver **chassis.** Tune the test oscillator to **460 kc, place its modulation switch to** "On" and its output **switch** to "Hi."

(b) Turn on the receiver and test oscillator. Increase the output of the test oscillator until a deflection is noticeable on the **oscillograph screen.** The figures obtained represent several waves of the detected signal, the amplitude of which may be observed as an indication of output. Cause the wave image formed (400-cycle waves) to be spread completely across the screen by adjusting the "Horizontal gain" control. The image should be synchronized and made to remain motionless by adjusting the "Sync." and "Freq." controls.

(c) Adjust the two magnetite core screws (see figures 3 and 7) of the second i-f transformer (one on top and one on bottom) to produce maximum vertical deflection of the oscillographic image. This adjustment places the transformer in exact resonance with the 460-kc signal.

(d) The sweeping operation should follow using the frequency modulator. Shift the oscillograph "Timing" switch to "Ext." Insert plug of frequency modulator cable in test oscillator jack. Turn the test oscillator modulation switch to "Off." Turn on the frequency modulator and place its sweep-range switch to "Hi."

(e) Increase the frequency of the test oscillator by slowly turning its tuning control until two separate, distinct, and similar waves appear on the screen. If only one wave appears, increase the "Freq." control on the oscillograph to obtain two waves. These waves will be identical in shape, totally disconnected, and appear in reversed positions. They will have a common base line, which is discontinuous. Adjust the "Freq." and "Sync." controls of the oscillograph to make them remain motionless on the screen. Continue increasing the test oscillator frequency until these forward and reverse curves move together and overlap, with their highest points exactly coincident. This condition will be obtained at a test oscillator setting of approximately **575 kc.**

(f) With the images established as in (e), re-adjust the two magnetite core screws on the second i-f transformer so that they cause the curves on the oscillograph screen to become exactly coincident throughout their lengths and have maximum amplitude.

(g) Without altering the adjustments of the apparatus, shift the "Ant." output of the test oscillator to the input of the i-f system, i.e., to the RCA-6L7 first-detector grid cap through a **.001-mfd.** capacitor (with grid lead in place). Regulate the test oscillator output so that the amplitude of the oscillographic image is approximately the same as used above for adjustment (f).

(h) The two first i-f transformer magnetite core screws (one on top and one on bottom) should then be adjusted so that they cause the forward and reverse curves to become coincident throughout their lengths and have maximum amplitude. The composite wave obtained in this manner represents the resonance characteristic of the total i-f system. Lack of symmetry or irregularity of the resultant image will indicate the presence of a defect in the i-f system.

R-F Adjustments

Calibrate the pointer of the tuning dial by adjusting it to the extreme low-frequency end of dial scale (beyond 55 on dial) with the plates of the gang tuning condenser in full mesh. Alignment must be made in the sequence of "Short wave" band, "Medium wave" band, "Wave-trap," and "Standard broadcast" band.

"Short Wave" Band

(i) Connect the "Ant." output of the test oscillator to the antenna terminal "A1" through a **300-ohm** resistor. Remove the plug of the frequency modulator cable from the test oscillator. Turn test oscillator modulation switch to "On." Shift the oscillograph "Timing" switch to "Int."

(j) Set receiver range selector to its "Short wave" position and dial pointer to **20,000 kc.** Adjust the test oscillator to **20,000 kc.** Set oscillator air trimmer C13 to minimum capacity (plunger full out), and antenna air trimmer C5 to maximum capacity (plunger full in). Slowly push in oscillator trimmer C13 until maximum (peak) amplitude of output is reached. Two peaks may be found. Adjust C13 to the peak with minimum capacity (plunger near out) for maximum indication. Tighten lock nut. Slowly pull out plunger of antenna air trimmer C5 until maximum (peak) amplitude of output is reached while slightly rocking the gang tuning condenser back and forth through the signal. Two peaks may be found with this circuit. The peak with maximum capacity (plunger near in) should be used. Tighten lock nut.

"Medium Wave" Band

(k) Place receiver range selector to its "Medium wave" position with the receiver dial pointer set to **6,000 kc.** Tune the test oscillator to **6,000 kc.** Carefully adjust the oscillator and antenna air trimmers C14 and C6 respectively, so that each brings about maximum (peak) amplitude of output as shown by the wave on the oscillograph. When adjusting the oscillator trimmer C14, two peaks may be found. The one of minimum capacitance (plunger near out) should be used. Tighten lock nuts.

"Wave-Trap" Adjustment

(l) Connect the output of the test oscillator to the antenna terminal "A1" through a **200 mmfd. (important)** capacitor. Place receiver range selector in "Standard broadcast" position. Set the receiver dial to a position of no extraneous signals near **600 kc.** Tune the test oscillator to **460 kc.** Adjust the wave-trap magnetite core screw to the point which causes minimum amplitude of output (maximum suppression of signal) as shown by the wave on the oscillograph. An increase of the test-oscillator output may be necessary before this point of minimum amplitude, obtained by correct adjustment of wave-trap screw, becomes apparent on **oscillograph** screen.

"Standard Broadcast" Band

(m) Reduce output of test oscillator to minimum. Set receiver dial pointer to **600 kc.** Tune the test oscillator to 600 kc and increase its output until a deflection is noticeable on the **oscillograph** screen.

(n) Adjust oscillator magnetite core screw (top of oscillator coil) so that maximum **(peak)** amplitude of output is shown on the **oscillograph** screen.

(o) Set receiver dial pointer to **1,500 kc.** Set the test oscillator to 1,500 kc (1,500-3,100-kc range) and increase its output to produce a registration on the oscillograph. Carefully adjust the oscillator and antenna air trimmers C16 and C7 respectively so that each brings about maximum (peak) amplitude of output as shown by the waves on the oscillograph. Shift the oscillograph "Timing" switch to "Ext." Place the frequency modulator sweep-range switch to "Lo" position and insert plug of the frequency modulator cable in test oscillator jack. Turn test oscillator modulation switch to "Off." Retune the test oscillator (increase frequency) until the forward and reverse waves show on the oscillograph screen and become coincident at their highest points. This will occur at a test oscillator setting of approximately **1,680 kc.** Adjust the trimmers C16 and C7 again, setting each to the point which produces the best coincidence and maximum amplitude of the images.

(p) Remove the plug of the frequency modulator cable from test oscillator jack. Turn test oscillator modulation switch to "On." Set oscillograph "Timing" switch to "Int." Tune test oscillator to **200 kc.** (200-400-kc range). Tune receiver for maximum response to this signal at a dial reading of approximately **600 kc.** Third harmonic of 200 kc is used for this adjustment. Shift oscillograph "Timing" switch to "Ext." Insert the plug of the frequency modulator cable in test oscillator jack. Turn test oscillator modulation switch to "Off." Retune the test oscillator (increase frequency) until the forward and reverse waves show on the oscillograph screen. This will occur at a test oscillator setting of approximately 230 kc. Disregarding the fact that the two images may come together, adjust the oscillator magnetite core screw (top of oscillator coil) to produce maximum amplitude of images. Shift oscillograph "Timing" switch to "Int." Remove the plug of the frequency modulator cable from the test oscillator. Turn test oscillator modulation switch to "On." Repeat adjustment (o), and then lock C16 and C7.

Output Indicator Alignment

Attach the output indicator across the loudspeaker voice-coil circuit. Advance the receiver volume control to its maximum position, letting it remain in such position for all adjustments. For each adjusting operation, regulate the test oscillator output so that the signal level is as low as possible and still be observable at the receiver output. Use of such small signal will obviate broadness of tuning which would otherwise result from a.v.c. action on a stronger one.

I-F Adjustments

(a) Connect the "Ant." output of the test oscillator to the grid cap of the RCA-6L7 (with grid lead in place) through a **.001-mfd.** capacitor, with "Gnd." to receiver **chassis.** Tune the test oscillator to 460 kc, place its modulation switch to "On" and its output switch to "Hi."

(b) Adjust the two magnetite core screws of the second i-f transformer (one on top and one on bottom), to produce maximum (peak) output.

(c) The two first i-f transformer magnetite core screws (one on top and one on bottom) should be adjusted to produce maximum (peak) output

MODELS 7T,7K,8T,8K
Alignment,Part 2
Parts List

RCA MFG. CO., INC.

It is advisable to repeat the adjustment of all i-f magnetite core screws to assure that the interaction between them has not disturbed the original adjustments.

R-F Adjustments

Calibrate the pointer of the tuning dial by adjusting it to the extreme low-frequency end of dial scale (beyond 55 on dial) with the plates of the gang tuning condenser in full mesh. Alignment must be made in sequence of "Short wave" band, "Medium wave" band, "Wave-trap", and "Standard broadcast" band.

"Short Wave" Band

(d) Connect the "Ant." output of the test oscillator to the antenna terminal "A1" through a 300-ohm resistor, leaving the "Gnd." of the oscillator connected to the receiver chassis.

(e) Place range selector to its "Short wave" position. Set receiver dial pointer to 20,000 kc. Adjust test oscillator to 20,000 kc. Set oscillator air trimmer C13 to minimum capacity (plunger full out), and antenna air trimmer C5 to maximum capacity (plunger full in). Slowly push in oscillator trimmer C13 until maximum (peak) output is reached. Two peaks may be found. Adjust C13 to the peak with minimum capacity (plunger near out) for maximum indication. Tighten lock nut. Slowly pull out plunger of antenna air trimmer C5 until maximum (peak) output is reached while slightly rocking the gang tuning condenser back and forth through the signal. Two peaks may be found with this circuit. The peak with maximum capacity (plunger near in) should be used. Tighten lock nut.

"Medium Wave" Band

(f) Place the receiver range selector to its "Medium wave" position, with the receiver dial pointer set to 6,000 kc. Tune test oscillator to 6,000 kc. Carefully adjust the oscillator and antenna air trimmers C14 and C6 respectively, so that each brings about maximum (peak) output. When adjusting the oscillator trimmer C14, two peaks may be found. The one of minimum capacitance (plunger near out) should be used.

"Wave-Trap" Adjustment

(g) Connect the "Ant." output of the test oscillator to the antenna terminal "A1" through a 200 mmfd. (important) capacitor. Place the range selector to its "Standard broadcast" position and set the receiver dial pointer to a position of no extraneous signals near 600 kc. Tune the test oscillator to 460 kc. Adjust the wave-trap magnetite core screw to the point which causes minimum output (maximum suppression of signal). An increase of the test-oscillator output may be necessary before the point of minimum output, obtained by adjustment of wave-trap screw, becomes apparent on the output indicator.

"Standard Broadcast" Band

(h) Reduce output of test oscillator to a minimum. Tune the test oscillator to 600 kc and set receiver dial pointer to 600 kc. Adjust output of test oscillator until a slight indication of output is visible.

(i) Adjust the oscillator magnetite core screw (top of oscillator coil) so that maximum (peak) output results.

(j) Set receiver dial pointer to 1,500 kc. Tune the test oscillator to 1,500 kc. Carefully adjust the oscillator and antenna air trimmers C16 and C7 respectively so that each brings about maximum (peak) output.

(k) Tune the test oscillator to 600 kc. Tune the receiver to pick up this signal disregarding the dial reading at which it is best received. Adjust oscillator magnetite core screw (top of oscillator coil) for maximum (peak) output while rocking gang tuning condenser. After completing this adjustment, the trimmers C16 and C7 should be re-adjusted as in (j) to correct for any change in the oscillator high-frequency tuning which has been caused by the preceding adjustment.

Antenna and Ground Terminals

These receivers are equipped with an antenna-ground terminal board having three terminals. These terminals are marked "A2," "A1," and "G," the latter being the ground terminal and should always be connected to a good external ground. The transmission line leads of the RCA RK-40A antenna system should be connected to terminals "A2" and "A1." The receiver coupling units of the RCA RK-40 and the RCA Spider-Web antenna systems should be connected to terminals "A1" and "G." Connect a single-wire antenna to terminal "A1."

Phonograph Terminal Board

A terminal board is provided for connecting a phonograph into the audio amplifying circuit. Typical methods of connecting a low-impedance pickup, or the RCA Victor Models R-93, R-93-2, and R-93-3 Record Players are shown on the Schematic Diagram (figure 1).

RADIOTRON COMPLEMENT
(1) RCA-6L7.....First Detector
(2) RCA-6J7.....Oscillator
(3) RCA-6K7.....Intermediate Amplifier
(4) RCA-6H6.....Second Detector and A.V.C.
(5) RCA-6F5.....Audio Voltage Amplifier
(6) RCA-6F6.....Power Output
(7) RCA-5Z4.....Full-Wave Rectifier
(8) RCA-6E5 (Models 8T and 8K only).Tuning Tube

FREQUENCY RANGES
"Standard Broadcast"..... 530- 1,800 kc
"Medium Wave"..... 1,800- 6,300 kc
"Short Wave"..... 6,300-22,000 kc

REPLACEMENT PARTS

Insist on genuine factory tested parts, which are readily identified and may be purchased from authorized dealers.

Stock No.	Description	List Price	Stock No.	Description	List Price
	RECEIVER ASSEMBLIES		12714	Capacitor—Adjustable capacitor (C5, C6, C7, C13, C14, C16)	.38
12706	Arm—Hub and arm complete for operating shutter (located on range switch shaft)	.22	12722	Capacitor—18 Mmfd. (C15)	.20
			12723	Capacitor—56 Mmfd. (C9)	.20
12716	Board—Antenna and ground terminal board	.20	12726	Capacitor—56 Mmfd. (C2)	.20
			12724	Capacitor—120 Mmfd. (C18, C32)	.28
12717	Board—Phonograph terminal board	.22	12404	Capacitor—120 Mmfd. (C20, C22, C23, C24)	.26
5237	Bushing—Variable capacitor mounting bushing assembly—Package of 3	.43	12725	Capacitor—150 Mmfd. (C1)	.28
			12406	Capacitor—180 Mmfd. (C25)	.26
12730	Cable—Shielded cable approximately 143-in. long—volume control to phono terminal board	.40	12727	Capacitor—555 Mmfd. (C12)	.20
			12537	Capacitor—560 Mmfd. (C3)	.20
11625	Cable—Tuning tube cable and socket complete (Models 8T and 8K)	1.26	12729	Capacitor—1,550 Mmfd. (C11)	.36
			12728	Capacitor—4,500 Mmfd. (C10)	.36
12511	Cap—Grid contact cap—Package of 5	.15	4868	Capacitor—.005 Mfd. (C19, C35)	.20
			4858	Capacitor—.01 Mfd. (C26, C27, C31)	.25
11315	Capacitor—.015 Mfd. (C33)	.20	11195	Socket—5-contact 5Z4 radiotron socket	.15
12670	Capacitor—.035 Mfd. (C34)	.20	11198	Socket—7-contact 6J7, 6K7 or 6L7 radiotron socket	.15
4836	Capacitor—.05 Mfd. (C40) (Models 8T and 8K)	.30	11196	Socket—8-contact 6F5, 6F6, 6H6, radiotron socket	.15
4841	Capacitor—0.1 Mfd. (C29)	.22			
11414	Capacitor—0.1 Mfd. (C30)	.20	11222	Socket—Dial lamp socket	.18
4840	Capacitor—0.25 Mfd. (C28)	.30	11381	Socket—Tuning tube socket and cover (Models 8T and 8K)	.45
5170	Capacitor—0.25 Mfd. (C8, C21)	.20			
11240	Capacitor—10 Mfd. (C36)	1.08	12007	Spring—Retaining spring for core Stock No. 12006, 12664 and 12711—Package of 10	.36
5212	Capacitor—18 Mfd. (C37)	1.16			
12708	Coil—Antenna coil and shield (L2, L3, L4, L5)	2.04	12849	Spring—Tension spring for band indicator shutter link—Package of 5	.18
12709	Coil—Oscillator coil and shield (L6, L7, L8)	2.02	12707	Switch—Range switch (S1, S2)	1.64
12701	Condenser—2-gang variable tuning condenser (C4, C17)	4.00	12668	Tone Control—Control and operating switch (R16, S3)	1.22
5119	Connector—3-contact female connector for speaker cable	.25	12652	Transformer—First I.F. transformer complete (L9, L10, C20, C22)	1.60
12711	Core—Adjustable core and stud for Stock No. 12709	.16	11999	Transformer—Power transformer 105-125 volts, 60 cycle (T1)	3.80
12006	Core—Adjustable core and stud for Stock No. 12652 and 12653	.22	12132	Transformer—Power transformer 105-125 volts, 25 cycle (T1)	5.48
12664	Core—Adjustable core and stud for Stock No. 12654	.22	12133	Transformer—Power transformer 100-250 volts, 60 cycle (T1)	6.25
12703	Dial—Station selector dial scale	.80	12653	Transformer—Second I.F. transformer complete (L11, L12, C23, C24, C25, R8, R9)	2.06
12702	Drive—Vernier drive for tuning capacitor	.68			
12712	Indicator—Station selector indicator pointer	.22	12654	Trap—Wave trap complete (L1)	.75
5226	Lamp—Indicator dial lamp 6.3 volt—Package of 5	.70	13144	Volume Control—Control and operating switch (R11)	1.00
12718	Mask—Dial light diffuser complete with red, orange and green colored screen	.40		REPRODUCER ASSEMBLIES	
12738	Resistor—27,000 ohms, insulated, ¼ watt—Package of 5 (R10)	1.00	12641	Board—Reproducer terminal board	.15
			12640	Bracket—Output transformer mounting bracket	.18
11282	Resistor—36,000 ohm, carbon type 1/10 watt—Package of 5 (R8)	.75	12012	Coil—Field coil (L15)	1.85
12286	Resistor—56,000 ohm, carbon type, ¼ watt—Package of 5 (R1)	1.00	11469	Coil—Neutralizing coil (L13)	.20
			12642	Cone—Reproducer cone and dust cap (L14) (Models 7T and 8T)	.94
11282	Resistor—56,000 ohm, carbon type, 1/10 watt—Package of 5 (R4)	.75	12667	Cone—Reproducer cone and dust cap (L14) (Models 7K and 8K)	1.00
11281	Resistor—100,000 ohm, carbon type, 1/10 watt—Package of 5 (R13)	.75	5118	Connector—3-contact male connector for speaker cable	.25
11398	Resistor—220,000 ohm, carbon type, 1/10 watt—Package of 5 (R9)	.75	12666	Cover—Speaker cover (Models 7K and 8K)	.65
11453	Resistor—270,000 ohm, carbon type, 1/10 watt—Package of 5 (R14)	.75	9696	Reproducer Complete—(Models 7K and 8K)	6.90
11452	Resistor—470,000 ohm, carbon type, 1/10 watt—Package of 5 (R1, R15)	.75	9699	Reproducer Complete—(Models 7T and 8T)	6.38
12285	Resistor—470,000 ohm, insulated, ¼ watt—Package of 5 (R12)	1.00	11253	Transformer—Output transformer (T2)	1.56
12013	Resistor—1 meg., carbon type, 1/10 watt—Package of 5 (R22) (Models 8T and 8K)	.75	11886	Washer—Spring washer to hold field coil securely—Package of 5	.20
11626	Resistor—2.2 meg., carbon type, ¼ watt—Package of 5 (R7, R20, R21)	1.00		MISCELLANEOUS ASSEMBLIES	
12004	Resistor—Voltage divider comprising one 216 ohm, one 27 ohm and one 22 ohm sections (R17, R18, R19)	.45	11996	Bracket—Tuning tube mounting bracket (Models 8T and 8K)	.22
			12698	Crystal—Station selector crystal and escutcheon	1.02
12715	Resistor—Wire wound comprising one 22,000 ohm and one 10,000 ohm sections (R5, R6)	.66	12742	Escutcheon—Tuning tube escutcheon (Models 8T and 8K)	.22
			12698	Knob—Large tuning knob—Package of 5	.68
4669	Screw—No. 8-32 set screw for arm Stock No. 12706—Package of 10	.75	11582	Knob—Tone control knob—Package of 5	.50
			12700	Knob—Vernier tuning knob (small)—Package of 5	.38
12651	Shield—Coil shield for Stock No. 12708	.72	11347	Knob—Volume control or range switch knob—Package of 5	.75
12710	Shield—Coil shield for Stock No. 12709	.78			
12735	Shield—Dial lamp shield—Package of 5	.58	11377	Screw—Chassis mounting screw assembly for Table Model—Package of 4	.12
12008	Shield—I.F. transformer shield for Stock No. 12652 and 12653	.76	11210	Screw—Chassis mounting screw assembly for Console Model—Package of 4	.28
12581	Shield—Shield top for I.F. transformer Stock No. 12653	.36	4982	Spring—Retaining spring for knob Stock No. 12699—Package of 10	.26
12607	Shield—Shield top for I.F. transformer Stock No. 12652	.30	11349	Spring—Retaining spring for knob Stock No. 11347, 11582 and 12700—Package of 5	.15
12704	Shutter—Dial scale holder and shutter assembly for band indicator	.88			

Prices quoted above are subject to change without notice.

Chassis Wiring

RCA MFG. CO., INC.

MODEL 7U
Schematic

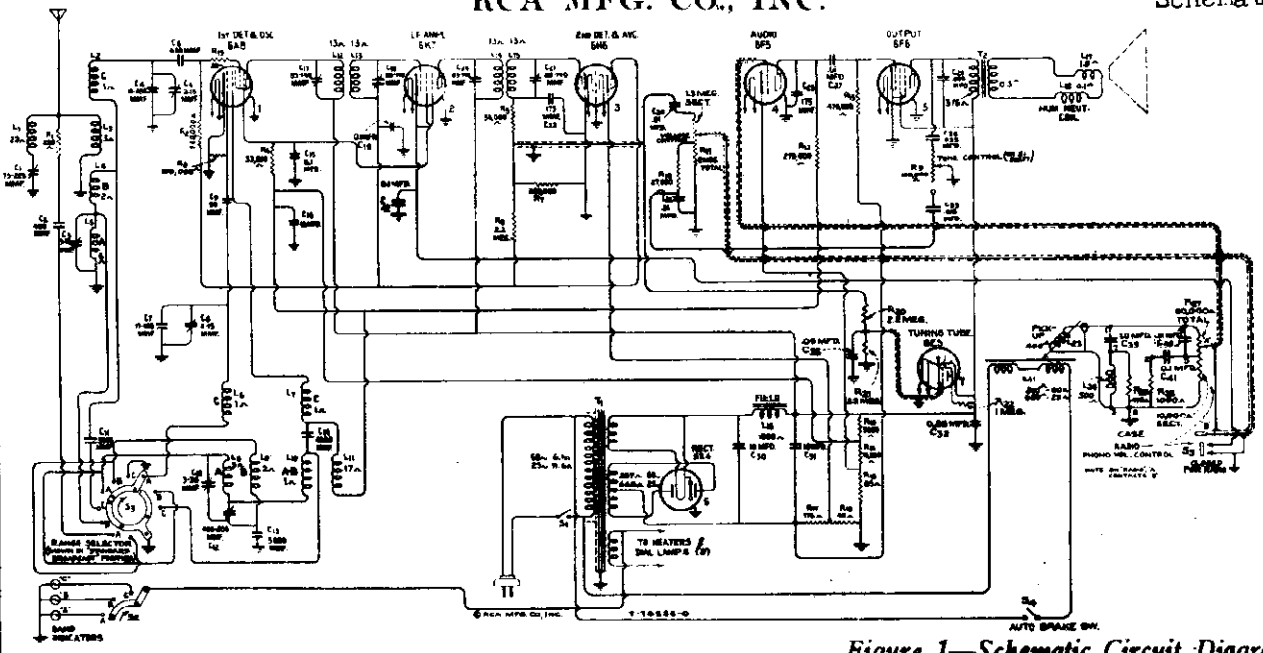

Figure 1—Schematic Circuit Diagram

Electrical Specifications

FREQUENCY RANGES

"Standard broadcast" (A) ..... 540- 1,625 kc.
"Medium wave" (B) .....1,625- 5,700 kc.
"Short wave" (C) .....5,700-18,000 kc.

ALIGNMENT FREQUENCIES

"Standard broadcast" (A)...600 kc. (osc.), 1,400 kc. (osc. and ant.)
"Medium wave" (B) .....None required
"Short wave" (C).....15,000 kc. (osc. and ant.)

Intermediate Frequency .....460 kc.

POWER OUTPUT

Undistorted .....2.0 watts
Maximum .....4.5 watts

LOUDSPEAKER

Type .....Electrodynamic
Impedance (v.c.).....2.2 ohms at 400 cycles

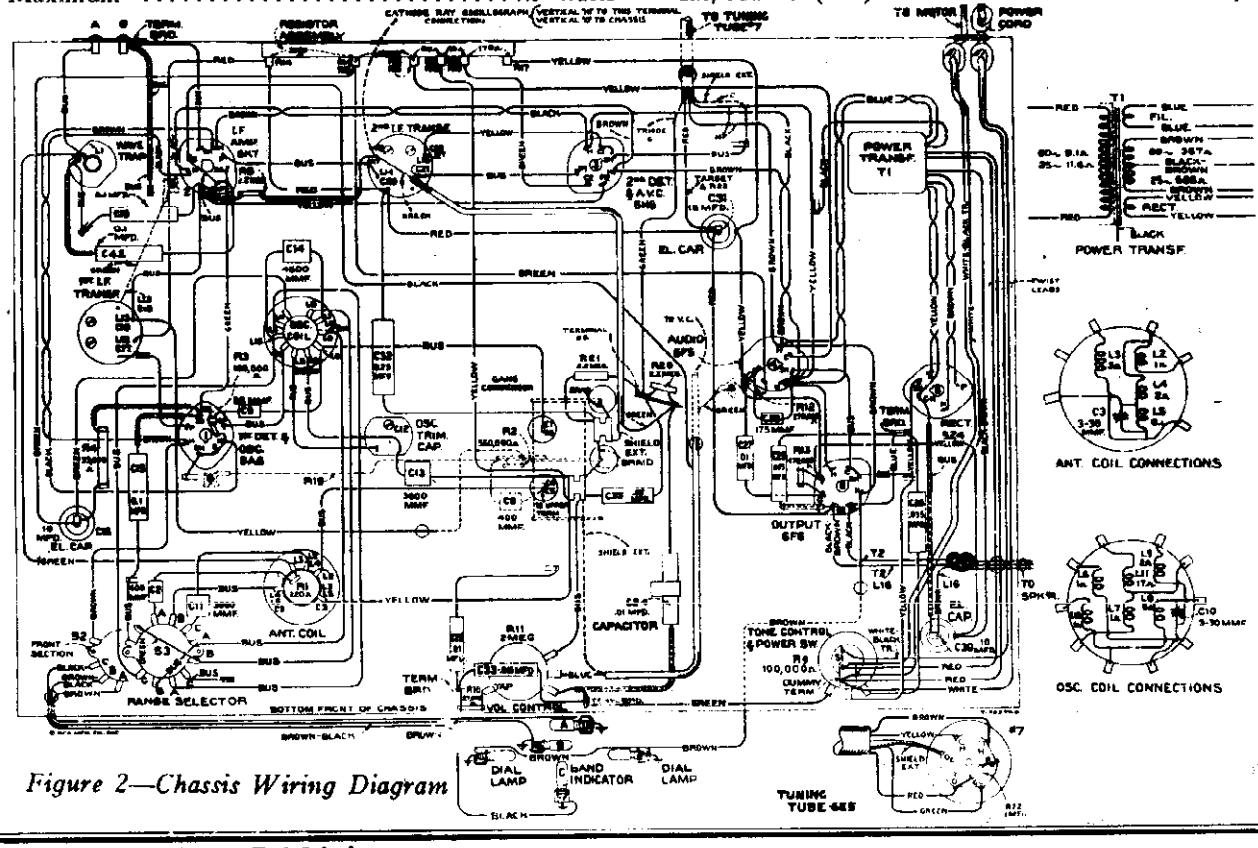

Figure 2—Chassis Wiring Diagram

©John F. Rider, Publisher

LODEL 7U | RCA MFG. CO., INC. | Socket, Trimmers
Resistance, Voltage | | Speaker, Transformer

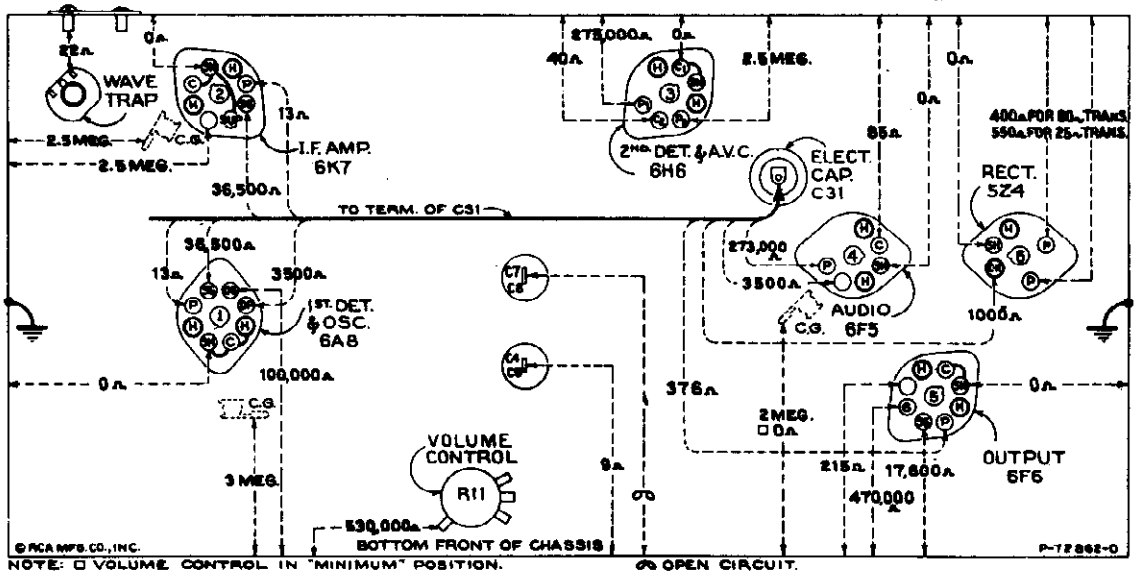

Figure 4—Resistance Diagram

Power supply disconnected—Radiotrons in sockets—Tuning condenser in full mesh
Range selector "Standard broadcast"—Radio–Phono-volume "Radio"—Radio volume control maximum

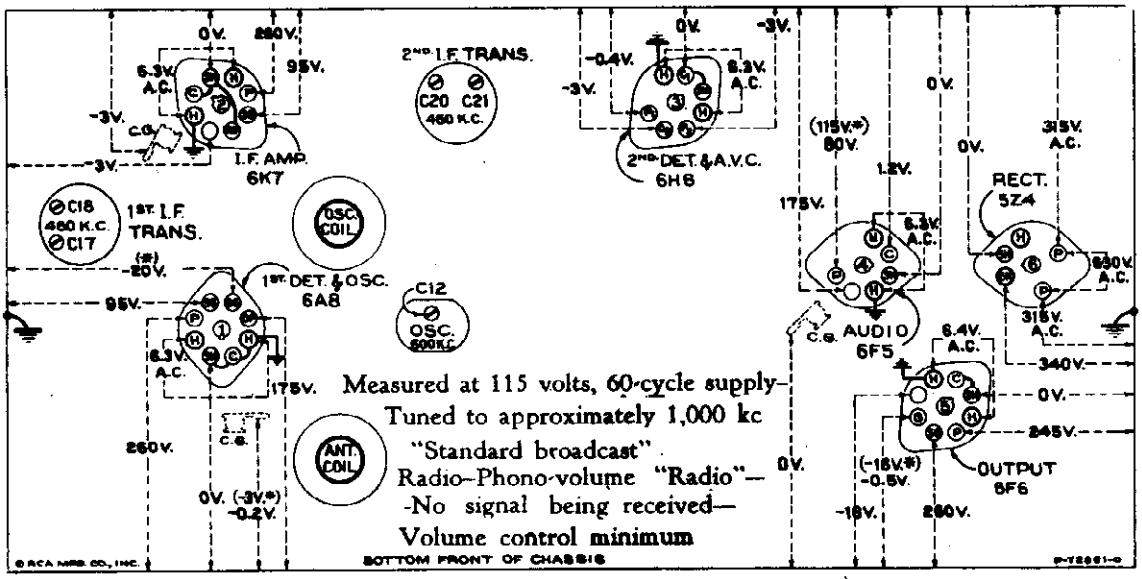

Measured at 115 volts, 60-cycle supply—
Tuned to approximately 1,000 kc
"Standard broadcast"
Radio–Phono-volume "Radio"—
—No signal being received—
Volume control minimum

Figure 7—Radiotron Socket Voltages, Coil, and Trimmer Locations

Note: *Two voltage values are shown for some readings. The higher value shown in parentheses with asterisk (*) indicates operating conditions without voltmeter loading. The lower value is the actual measured voltage and differs from the higher value because of the additional loading of the voltmeter through the high series circuit resistance.*

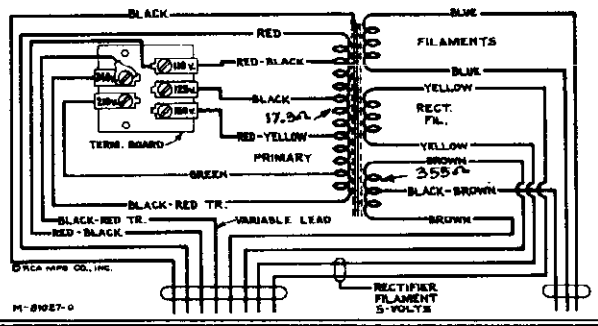

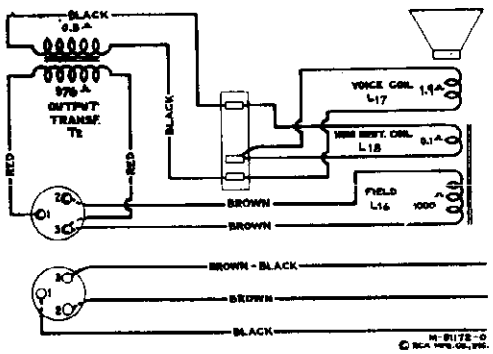

Figure 6—Loudspeaker Wiring

©John F. Rider, Publisher

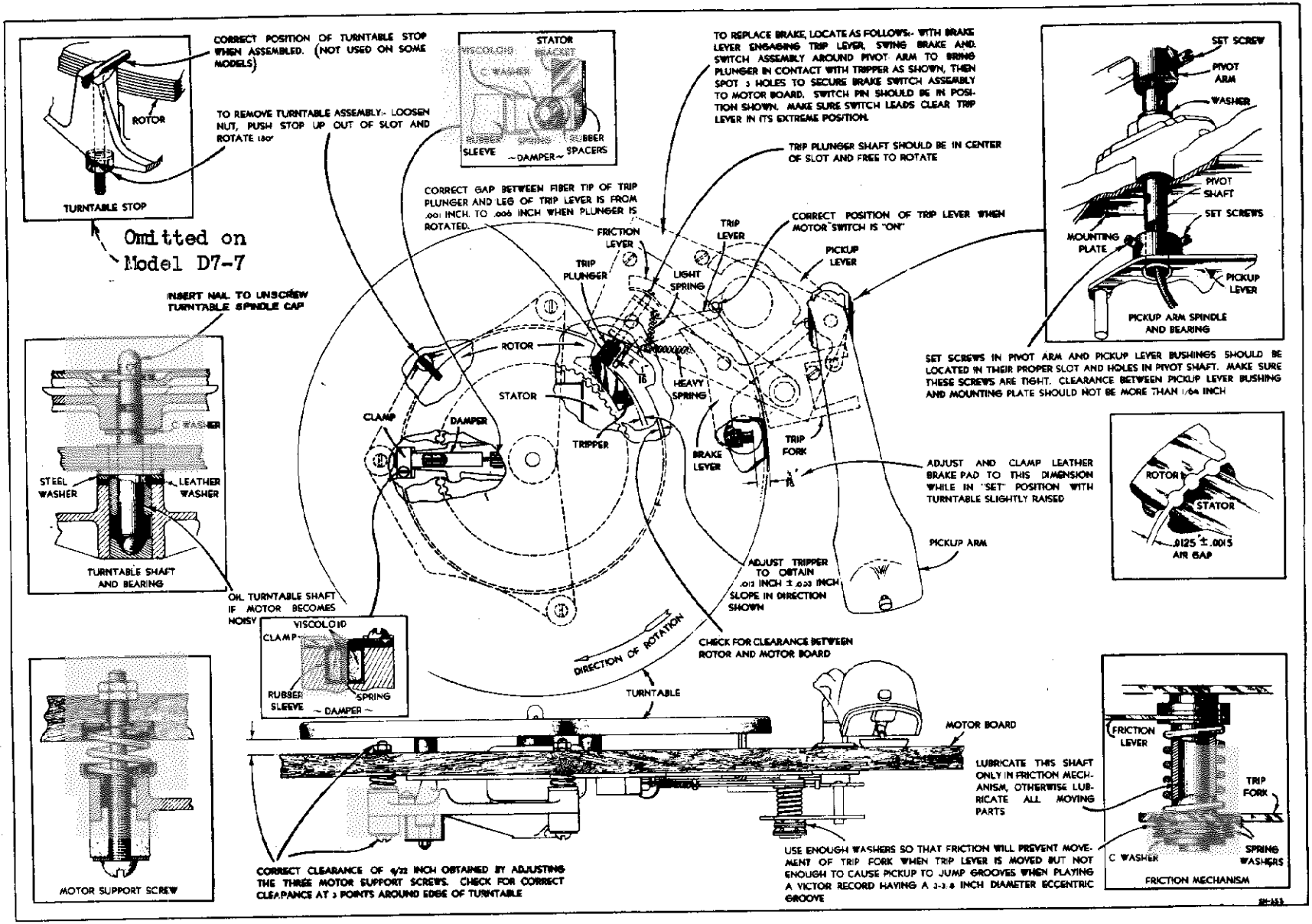

Figure 8—Motor Board Adjustments

RCA MFG. CO., INC.

©John F. Rider, Publisher

MODEL 7U
Assembly Wiring
Pickup Details

RCA MFG. CO., INC.

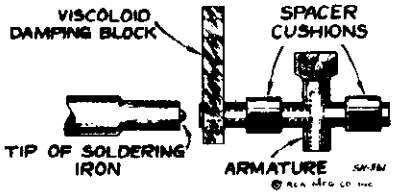

Figure 11—Special Soldering-Iron Tip

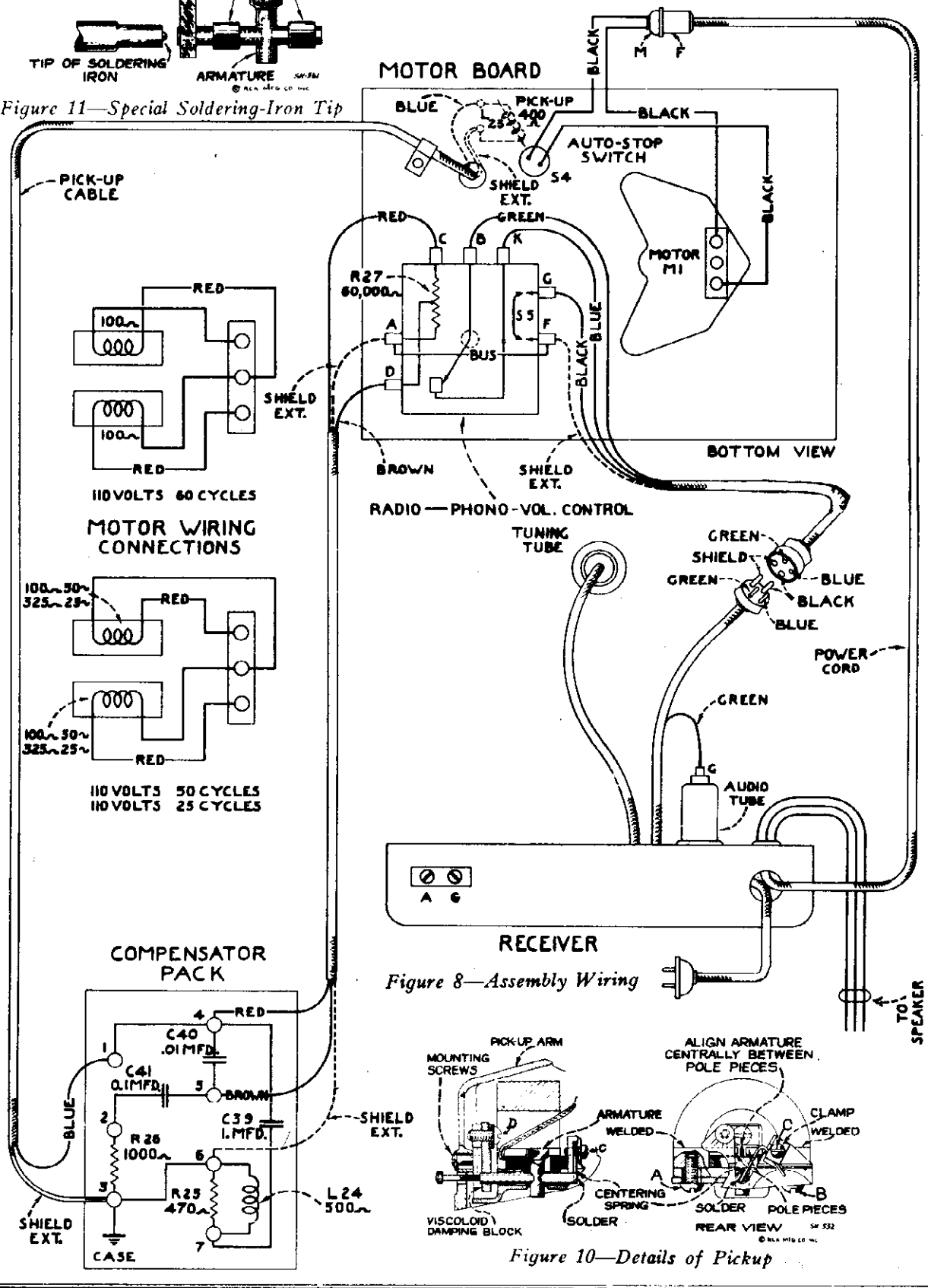

Figure 8—Assembly Wiring

Figure 10—Details of Pickup

©John F. Rider, Publisher

RCA MFG. CO., INC.

MODEL 7U
Circuit Data
Alignment
Pickup Data, Part 1

General Features

The Model 7U combination instrument consists of a seven-tube radio receiver and a manually-operated phonograph combined in one cabinet. The superheterodyne circuit is used with such features of design as: Antenna wave-trap, aural compensated volume control, continuously variable tone control with music-voice switch, automatic volume control, resistance-coupled audio system, tuning tube "Magic Eye," and band selective indication of dial scales. The tuning range is continuous through the "Standard broadcast" band, "Medium wave" band, and the "Short wave" band. It includes domestic broadcast, police, aircraft, and amateur services, and also the important foreign short-wave broadcast bands at 49, 31, 25, 19, and 16 meters.

Circuit Arrangement

The first detector and oscillator functions are accomplished in a single tube, an RCA-6A8. The input of this tube is coupled to the antenna through a tuned transformer. This transformer consists of a single primary and three series-connected secondary windings to provide the three ranges of tuning. The oscillator coil system is similarly wound on a single form. A range-selector switch S3 is used for connecting the various sections of these two coil systems into the circuit to provide operation on the band desired. The coils are tuned by a variable two-section gang condenser having trimming capacitors in shunt with each section. There are additional trimming capacitors across the section of each coil used for the "Standard broadcast" band. A series trimming capacitor is also associated with the "Standard broadcast" oscillator coil.

The intermediate-frequency stage is coupled to the RCA-6A8 and to the RCA-6H6 by means of tuned transformers. The windings of these transformers (both primary and secondary) are resonated with adjustable trimming capacitors to tune to 460 kc.

The modulated signal as obtained from the output of the i-f system is detected by an RCA-6H6 twin-diode tube. Audio frequency secured by this process is passed on to the a-f system for amplification and final reproduction. The d-c voltage which results from detection of the signal is used for automatic volume control. This voltage which develops across resistor R7 is applied as automatic control-grid bias to the first detector and i-f tubes. The second (auxiliary) diode of the RCA-6H6 is used to supply residual bias for the controlled tubes under conditions of little or no signal. This diode, under such conditions, draws current which flows through resistors R6 and R7, thereby maintaining the desired operating bias on such tubes. On application of signal energy above a certain level, however, the auxiliary bias-diode ceases to draw current, and the a.v.c. diode takes over the biasing function.

Manual volume control is effected by means of an acoustically tapered potentiometer connected as a variable coupling element between the output of the second detector and the first-audio control grid. After amplification by the RCA-6F5, the audio signal is transmitted by resistance-capacitance coupling to the input of the RCA-6F6 power-output stage, which, in turn, is transformer-coupled to the dynamic loudspeaker.

Continuously-variable tone control is effected by means of the combination of a capacitor C28 and variable resistor R9 shunting the plate circuit of the output tube. Extreme clockwise rotation of the tone control disconnects the resistor R9 from the circuit and places an additional capacitor, C33, in shunt with capacitor C25, thereby reducing the low-frequency response of the amplifier. This point is known as the "Speech" position and provides optimum intelligibility of speech.

An RCA-6E5 cathode-ray tuning tube is used as a means of visually indicating when the receiver is accurately tuned to the incoming signal. This tube consists of an amplifier section and a cathode-ray section, built in the same glass envelope. A component of the signal voltage developed across resistor R7 is used to actuate the control grid of the amplifier section.

The power-supply system consists of an RCA-5Z4 rectifier tube, which is supplied from an efficiently designed power transformer, and which works into a suitable filter. The various potentials required for the plate, screen, control grid, and cathode circuits, are obtained from the output of the filter. The electrodynamic loudspeaker field coil is used as a filter reactor.

The phonograph mechanism is of the manually operated type, having a synchronous motor which rotates the turntable at a speed of 78 r.p.m. The 10-inch turntable will accommodate either the 10-inch or 12-inch phonograph records. The pickup mechanism and tone arm are combined as one unit. The instrument may be purchased with any one of five ratings as specified under Electrical Specifications. *It is important that a machine of any particular rating be operated at the frequency and voltage for which it is rated.* Attempts to operate at ratings other than specified for the particular instrument will result in improper reproduction from the phonograph and may result in damage to both the phonograph motor and radio receiver. An automatic switch is provided to turn "off" the phonograph motor at the completion of the record.

SERVICE DATA

Alignment Procedure

There are six adjustments required for the alignment of the antenna, oscillator, and wave-trap tuned circuits. The i-f transformer adjustments are made by four trimming capacitor screws. Improper alignment usually causes the impairment of sensitivity, selectivity, and tone quality. Such conditions will usually exist simultaneously.

A standard test oscillator, such as the RCA Stock No. 9595, will be required as a source of signal at the specified alignment frequencies. Means for indication of the receiver output during alignment is also necessary to show when the correct point of adjustment is reached. The RCA Stock No. 4317 Neon Glow Indicator is designed for this purpose.

Attach the output indicator across the loudspeaker voice coil. Advance the receiver volume control to its maximum position, letting it remain in such position for all adjustments. For each adjusting operation, regulate the test-oscillator output control so that the signal level is as low as possible and still be observable at the receiver output. Use of such small signal will obviate broadness of tuning which would otherwise result from a.v.c. action on a stronger one.

I-F Adjustments

(a) Connect the test oscillator to the grid cap of the RCA-6A8 through a .001 mfd. capacitor, and connect the test oscillator ground to the receiver chassis. Set test oscillator to 460 kc.

(b) Adjust the two trimming capacitors (C20 and C21) of the second i-f transformer to produce maximum (peak) output.

(c) Adjust the two trimming capacitors (C17 and C18) of the first i-f transformer, to produce maximum (peak) output.

It is advisable to repeat the adjustment of all i-f trimming capacitors a second time to assure that the interaction between them has not disturbed the original adjustment.

R-F Adjustments

Calibrate the tuning dial by adjusting the scale pointer to the extreme end calibration mark (beyond 55 on dial) while the two-gang tuning condenser plates are in full mesh. Alignment (see figure 3 for location of trimming adjustments) of "Wave-trap," "Short wave" band, and "Standard broadcast" band should be made in the following order and sequence.

"Wave-Trap"

(a) Connect the output of the test oscillator to the antenna terminal through a 200-mmfd. (important) capacitor, leaving the test oscillator ground connected to the receiver chassis. With the range selector in its "Standard broadcast" position, set the receiver dial to a position of no extraneous signals, near 600 kc (60 on dial). Set the test oscillator to 460 kc. Adjust the wave-trap trimming capacitor C1 to a point which causes minimum amplitude of output. An increase of the test oscillator output may be necessary before the point of minimum amplitude, obtained by adjustment of wave-trap screw, becomes apparent on the output indicator.

"Short Wave" Band

(a) Connect the output of the test oscillator to the antenna terminal through a 400-ohm resistor, leaving the test oscillator ground connected as before.

(b) Set the range selector to its "Short wave" position. Set receiver dial pointer to 15,000 kc (15 on dial). Adjust the test oscillator to 15,000 kc. Adjust the oscillator trimming capacitor C8 to the point which produces maximum (peak) output. Two points may be found, each of which produces a maximum. The one of maximum trimmer capacitance (most clockwise) is correct and should be used.

"Standard Broadcast" Band

(a) Connect the output of the test oscillator to the antenna terminal through a 200-mmfd. capacitor, leaving test oscillator ground connected as before.

(b) Set the range selector to its "Standard broadcast" position. Set the receiver dial pointer to 1,400 kc (140 on dial). Adjust the test oscillator to 1,400 kc. Adjust the oscillator and antenna trimming capacitors, C10 and C3 respectively, to the points where each produces maximum (peak) output.

(c) Shift the test oscillator frequency to 600 kc and tune the receiver to pick up this signal, disregarding the dial reading at which it is best received.

(d) Adjust the low-frequency oscillator trimming capacitor, C12, simultaneously rocking the tuning control of the receiver backward and forward through the signal, until maximum (peak) output results from these combined operations. Repeat adjustments in (b) to compensate for any changes caused by the adjustment of the low-frequency oscillator coil trimming capacitor.

Phonograph Mechanism

The phonograph motor is of the synchronous type and designed to be simple and foolproof. Under normal operating conditions, service difficulties should be negligible. Occasionally, however, certain adjustments may be required. These adjustments are illustrated and explained in figure 9.

Magnetic Pickup

The pickup used in the phonograph unit is of an improved design. The horseshoe magnet is rigidly welded to the pole pieces and is irremovable. There is a centering spring attached to the armature to maintain proper adjustment and to provide a limiting effect on the movement of the armature. The frequency response is substantially uniform over a wide range. Service operations which may be necessary on the pickup are as follows:

Centering Armature

Refer to figure 10 showing the pickup inner structure. The armature is shown in its proper relation to the magnet pole pieces, i. e., exactly centered. Whenever this centering adjustment has been disturbed it will be necessary to remove the pickup mechanism from the tone arm by removing the needle holding screw and the two mounting screws from the front of the tone arm, holding the pickup assembly to keep it from dropping. Unsolder the two leads from the lugs on the terminal board at the rear of the pickup. Insert a small rod or nail into the armature needle hole and replace the needle holding screw, tightening it to hold the rod securely. If the armature clamping screws A and B have not been disturbed, screw C should be loosened which will permit the armature to be moved from side to side, the rod acting as a lever to perform this operation. The proper adjustment is obtained when the armature is moved to the extreme position on each side (the movement being limited by the armature striking the pole pieces) and then brought to the mid position between these two extremes. Screw C should then be tightened. The armature position should then be central between the pole pieces and at right angles to them. With a little practice, the correct adjustment of the armature will be obtained. The air gap between the pole pieces and the armature should be kept free from dust, filings, and other foreign material which would obstruct the movement of the pickup armature.

Damping Block

The viscoloid damping block which is attached to the front end of the armature shank serves as a mechanical filter to eliminate undesirable resonances and to cause the frequency response to be uniform. Should it be necessary to replace this damping block,

©John F. Rider, Publisher

MODEL 7U

Pickup Data, Part 2

Socket Parts List

RCA MFG. CO., INC.

the pickup mechanism should be removed from the tone arm as explained above. Unsolder the pickup coil leads from the two lugs on the pickup terminal board and remove the terminal board mounting screw and the terminal board. Then remove screw D and the damping block from the pickup assembly. Make sure that the shaft of the armature which contacts the viscoloid is clean. Then insert the new damping block so that it occupies the same position as that of the original block, and is in correct vertical alignment with the armature. The hole in the block is somewhat smaller than the diameter of the armature in order to permit a snug fit. With the damping block properly aligned on the armature, screw D with its washer should then be replaced. Heat should be applied to the armature (viscoloid side) so that the damping block will fuse at the point of contact and become rigidly attached to the armature. A special-tip soldering iron, constructed as shown in figure 11, will be found very useful in performing this operation. The iron should be applied only long enough to slightly melt the block, causing a small bulge on both sides.

Replacing Coil

Whenever there is defective operation due to an open or shorted pickup coil, this coil should be replaced. Remove the pickup mechanism and terminal board as described above. Remove screws A and B and the magnet assembly. Remove the bakelite coil support (with coil attached) and insert the new coil support assembly in its place, after which replace the magnet assembly and center the armature as described above, then re-assemble the remainder of the unit. Only rosin core solder should be used for soldering the coil leads and pickup leads to the pickup terminal board. This same type of solder should be used when necessary for soldering the centering spring to the armature.

Magnetizing

Loss of magnetization will not usually occur when the pickup has received normal care because the magnet and pole pieces are one unit and the magnetic circuit remains practically closed at all times. When the pickup has been mishandled, subjected to a strong a-c field, jolted, or dropped, there may be an appreciable loss of magnetic strength, in which case it will be necessary to remagnetize the entire structure. To do this, it will be necessary to first remove the pickup mechanism from the tone arm, and then remove the magnet assembly. Place the magnet assembly on the poles of a standard pickup magnetizer such as the **RCA Stock No. 9549 Pickup Magnetizer** and charging the magnet in accordance with the instructions accompanying the magnetizer. It is preferable to check the polarity of the pickup magnet and to remagnetize it so that the same polarity is maintained.

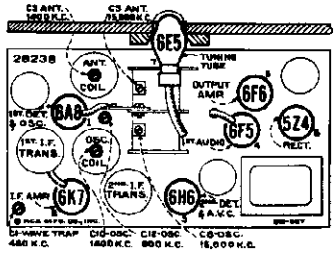

Figure 3—Radiotron, Coil, and Trimmer Locations

REPLACEMENT PARTS

Stock No.	DESCRIPTION	List Price
	RECEIVER ASSEMBLIES	
12930	Board—Antenna and ground terminal board	$0.20
5237	Bushing—Variable condenser mounting bushing assembly—Package of 3	.43
11868	Cable—Tuning lamp cable and socket	1.00
12032	Cable—3-conductor, shielded, volume control cable, approx. 8 inches long, complete with 4-contact male connector and grid contact cap	.90
11350	Cap—Grid contact cap—Package of 5	.20
12511	Cap—Grid contact cap—Package of 5	.15
11289	Capacitor—50 Mmfd.—(C9)	.25
11623	Capacitor—175 Mmfd.—(C22, C26)	.18
11290	Capacitor—400 Mmfd. (C2, C6)	.25
11622	Capacitor—3000 Mmfd.—(C13)	.36
11621	Capacitor—3600 Mmfd.—(C11)	.28
11287	Capacitor—4500 Mmfd.—(C14)	.30
4868	Capacitor—.005 Mfd.—(C29)	.20
11315	Capacitor—.013 Mfd.—(C33)	.20
12670	Capacitor—.035 Mfd.—(C28)	.20
11395	Capacitor—.01 Mfd.—(C24)	.18
4858	Capacitor—.01 Mfd.—(C25, C27)	.25
4836	Capacitor—.05 Mfd.—(C35)	.30
11414	Capacitor—0.1 Mfd.—(C15, C42)	.20
4841	Capacitor—0.1 Mfd.—(C19)	.22
5170	Capacitor—.25 Mfd.—(C32)	.25
11240	Capacitor—10 Mfd.—(C30)	1.08
11387	Capacitor—10 Mfd.—(C16)	.86
3212	Capacitor—18 Mfd.—(C31)	1.16
11465	Capacitor—Adjustable trimmer—(C12)	.48
11256	Capacitor—Adjustable trimmer for wave-trap, Stock No. 11391—(C1)	.48
11617	Coil—Antenna coil less shield—(L2, L3, L4, L5, C3, R1)	1.68
11618	Coil—Oscillator coil less shield—(L6, L7, L8, L9, L10, L11, C10)	2.22
12767	Condenser—2-gang variable tuning condenser—(C4, C5, C7, C8)	4.10
4573	Connector—2-contact female connector for motor cable—receiver section	.30
5119	Connector—3-contact female connector for chassis reproducer cable	.25
6123	Connector—4-contact male connector for cable, Stock No. 12032	.30
12768	Drive—Variable tuning condenser vernier drive	1.30
11619	Foot—Chassis mounting foot and bracket assembly—Package of 2	.65
12770	Holder—Dial scale holder and lamp bracket assembly	.55
12712	Indicator—Station selector indicator pointer	.22
4340	Lamp—Dial lamp—Package of 5	.60
12718	Mask—Dial light diffuser, complete with red, orange and green-colored screen	.40
11466	Resistor—Voltage divider—comprising one 3,500-ohm, one 13,000-ohm, one 85-	
	MOTOR BOARD ASSEMBLIES	
11751	Bushing—Motor mounting bushing and spring assembly, comprising one bushing, one large washer, one cup washer, one spring, one small washer and two nuts	$0.25
13065	Lever—Brake mechanism actuating lever, fastens to pivot shaft under base	.20
3261	Rest—Pickup rubber rest—Package of 5	.40
11750	Screw—No. 4-40 x 9/32, cone pointed, headless set screw for lever, Stock No. 13065—Package of 10	.22
13099	Brake—Automatic brake and switch complete	4.90
4577	Connector—2-contact male connector for brake switch power supply leads	.30
12932	Lever—Friction lever assembly complete	.35
11753	Plunger—Automatic brake trip plunger	.18
12043	Screw—Automatic brake screw and friction leather assembly	.20
11756	Spring—Automatic brake trip lever spring—Package of 10	.22
11757	Spring—Automatic brake lever spring—Package of 10	.20
11755	Switch—Automatic brake switch—(S4)	.75
	PICKUP AND ARM ASSEMBLIES	
11731	Armature—Pickup armature	.64
11732	Coil—Pickup coil—(L23)	.60
4543	Damper—Pickup damper block complete with damper plate	.10
12931	Pickup and arm complete	7.50
11951	Screw—Needle holding screw—Package of 10	.46
	REPRODUCER ASSEMBLIES	
11232	Board—Terminal board assembly	.18
11231	Bolt—Yoke and core assembly bolt and nut	.16
8060	Bracket—Output transformer mounting bracket	.14
11257	Clamp—Cone center suspension clamping nut and screw assembly—Package of 5	.25
11470	Coil—Field coil—(L16)	2.16
11469	Neutralizing coil—(L18)	.20
11256	Cone—Reproducer cone—(L17)—Package of 5	3.25
5118	Connector—3-contact male connector for reproducer	.25
5119	Connector—3-contact female connector for reproducer cable	.25
9022	Reproducer complete	7.16
11253	Transformer—Output transformer—(T2)	1.56
11288	Washer—Spring washer used to hold field coil securely—Package of 5	.20
	MOTOR ASSEMBLIES	
10194	Ball—Steel ball bearing—Package of 20	.25
11740	Base—Motor base and bearing assembly	1.45
11745	Cap—Turntable spindle cap—Package of 5	.30
11733	Coil—Stator assembly—comprising coil and laminations—105-125 volts, 60-cycle operation	2.96
11734	Coil—Stator assembly—comprising coil and laminations—105-125 volts, 50-cycle operation	3.08
11735	Coil—Stator assembly—comprising coil ohm, one 40-ohm and one 175-ohm sections—(R14, R15, R16, R17, R18)	$0.95
11624	Resistor—22 ohms—Flexible type complete with grid contact cap—(R19)	.22
11620	Resistor—220 ohms—Carbon type—1/10 watt—(R1)—Package of 5	.75
11400	Resistor—27,000 ohms—Carbon type—¼ watt—(R10)—Package of 5	1.00
8072	Resistor—33,000 ohms—Carbon type—½ watt—(R4)—Package of 5	1.00
11282	Resistor—56,000 ohms—Carbon Type—1/10 watt—(R5)—Package of 5	.75
12263	Resistor—100,000 ohms—insulated—¼ watt—Package of 5—(R3)	1.00
11398	Resistor—220,000 ohms—Carbon type—1/10 watt—(R7)—Package of 5	.75
11453	Resistor—270,000 ohms—Carbon type—1/10 watt—(R12)—Package of 5	.75
11452	Resistor—470,000 ohms—Carbon type—1/10 watt—(R13)—Package of 5	.75
11397	Resistor—560,000 ohms—Carbon type—1/10 watt—(R2)—Package of 5	.75
12013	Resistor—1 megohm—Carbon type—1/10 watt—(R22)—Package of 5	.75
11625	Resistor—2.2 megohms—Carbon type—¼ watt—(R6, R20, R21)—Package of 5	1.00
11603	Shield—Coil shield for Stock Nos. 11617 and 11618	.26
12735	Shield—Dial lamp shield—Package of 5	.25
11390	Shield—I. F. transformer shield for Stock Nos. 11388 and 11389	.25
11199	Socket—Dial lamp socket	.14
12771	Socket—Dial lamp socket—Located at top of dial scale	.25
11381	Socket—Tuning lamp socket and cover	.45
11195	Socket—5-contact 5Z4 Radiotron socket	.15
11198	Socket—7-contact 6F5 or 6H6 Radiotron socket	.15
11196	Socket—8-contact 6A8, 6F6 or 6K7 Radiotron socket	.15
12769	Switch—Range switch—(S2, S3)	1.25
12668	Tone Control and Power Switch—(R9, S1)	1.22
11391	Trap—Wave trap—(L1, C1)	1.22
11388	Transformer—First I. F. transformer less shield—(L12, L13, C17, C18)	1.80
11389	Transformer—Second I. F. transformer less shield—(L14, L15, C20, C21, C22, R5, R7)	3.02
11848	Transformer—Power transformer—100-125-volts, 50-60 cycles—(T1)	4.40
11849	Transformer—Power transformer—100-125-volts, 25-40 cycles—(T1)	5.70
11850	Transformer—Power transformer—105-250-volts, 40-60 cycles—(T1)	8.00
13144	Volume control—(R11) and laminations—105-125 volts, 25-cycle operation	1.00 $3.08
11748	Damper—Motor damper assembly—comprising one damper, one damper plate, one screw, two rubber washers and one "C" washer	.20
11741	Motor—105-125 volts, 60-cycle motor complete—(M1)	11.10
11742	Motor—105-125 volts, 50-cycle motor complete	11.10
11743	Motor—105-125 volts, 25-cycle motor complete	11.60
11746	Tripper—Automatic brake tripper—located on rotor laminations	.16
11737	Turntable—Turntable assembly—complete with rotor laminations—60-cycle operation	4.80
11738	Turntable—Turntable assembly—complete with rotor laminations—50-cycle operation	4.80
11739	Turntable—Turntable assembly—complete with rotor laminations—25-cycle operation	5.08
4083	Washer—Leather washer—Package of 10	.20
4084	Washer—Metal washer—Package of 10	.26
	MISCELLANEOUS ASSEMBLIES	
11762	Box—Used needle box	.25
11996	Bracket—Tuning lamp mounting bracket and clamp	.22
12030	Cable—2-conductor shielded cable, approx. 18 inches long, connects phonograph volume control to compensator pack	.52
12031	Cable—3-conductor shielded cable, approx. 19 inches long, complete with 4-contact female connector, connects phonograph volume to receiver	1.04
11272	Clamp—Cable clamp for phonograph volume control cable, Stock Nos. 12030 and 12031—Package of 5	.10
11760	Compensator—Phonograph compensator pack, comprising one 470-ohm and one 1,000-ohm resistors, one .01 Mfd., one .1 Mfd. and one 1 Mfd. capacitors and one .25 Henry reactor—(L24, C39, C40, C41, R25, R26)	3.85
4153	Connector—4-contact female connector for cable, Stock No. 12031	.48
12666	Cover—Reproducer cover	.65
12668	Escutcheon—Station selector escutcheon and crystal	1.02
12742	Escutcheon—Tuning tube escutcheon	.22
11347	Knob—Phonograph volume control, receiver volume control, or range switch knob—Package of 5	.75
11610	Knob—Station selector knob—includes one large and one small knob—Package of 5	1.00
11582	Knob—Tone and power switch knob—Package of 5	.50
11763	Receptacle—Needle receptacle	.38
11210	Screw—Chassis mounting screw assembly—comprising one screw, one washer, and one lockwasher—Package of 4	.28
4982	Spring—Retaining spring for large knob in Stock No. 11610—Package of 10	.50
11349	Spring—Retaining spring for small knob in Stock No. 11610, 11347 and 11582—Package of 5	.25
11695	Volume Control—Phonograph volume control and switch—(R27, S5)	1.60

The prices quoted above are subject to change without notice.

RADIOTRON COMPLEMENT

(1) RCA-6A8 ..... First-detector-oscillator
(2) RCA-6K7 ..... Intermediate amplifier
(3) RCA-6H6 ..... Second-detector-a.v.c.
(4) RCA-6F5 ..... Audio voltage amplifier
(5) RCA-6F6 ..... Audio power amplifier
(6) RCA-5Z4 ..... Full-wave rectifier
(7) RCA-6E5 ..... Tuning tube

Pilot Lamps (5) ..... Mazda No. 46, 6.3 volts, 0.25 amperes

POWER SUPPLY RATINGS

Rating A-6 ..... 105-125 volts, 60 cycles, 95 watts
Rating A-5 ..... 105-125 volts, 50 cycles, 95 watts
Rating B-2 ..... 105-125 volts, 25 cycles, 95 watts
Rating C-6 ..... 105-130/140-160/200-250 volts, 60 cycles, 95 watts
Rating C-5 ..... 105-130/140-160/200-250 volts, 50 cycles, 95 watts

©John F. Rider, Publisher

RCA MFG. CO., INC.

MODELS T7-5, C7-6
Schematic, Socket
Trimmers

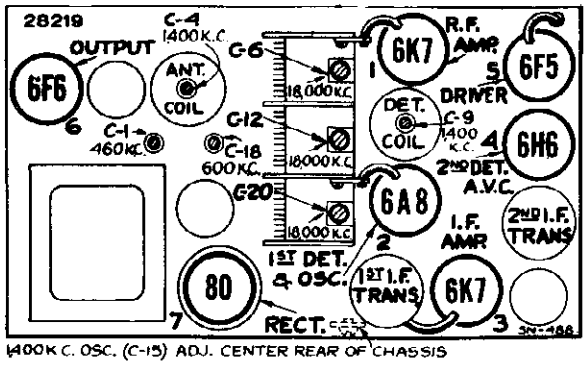

Radiotron and Coil Locations

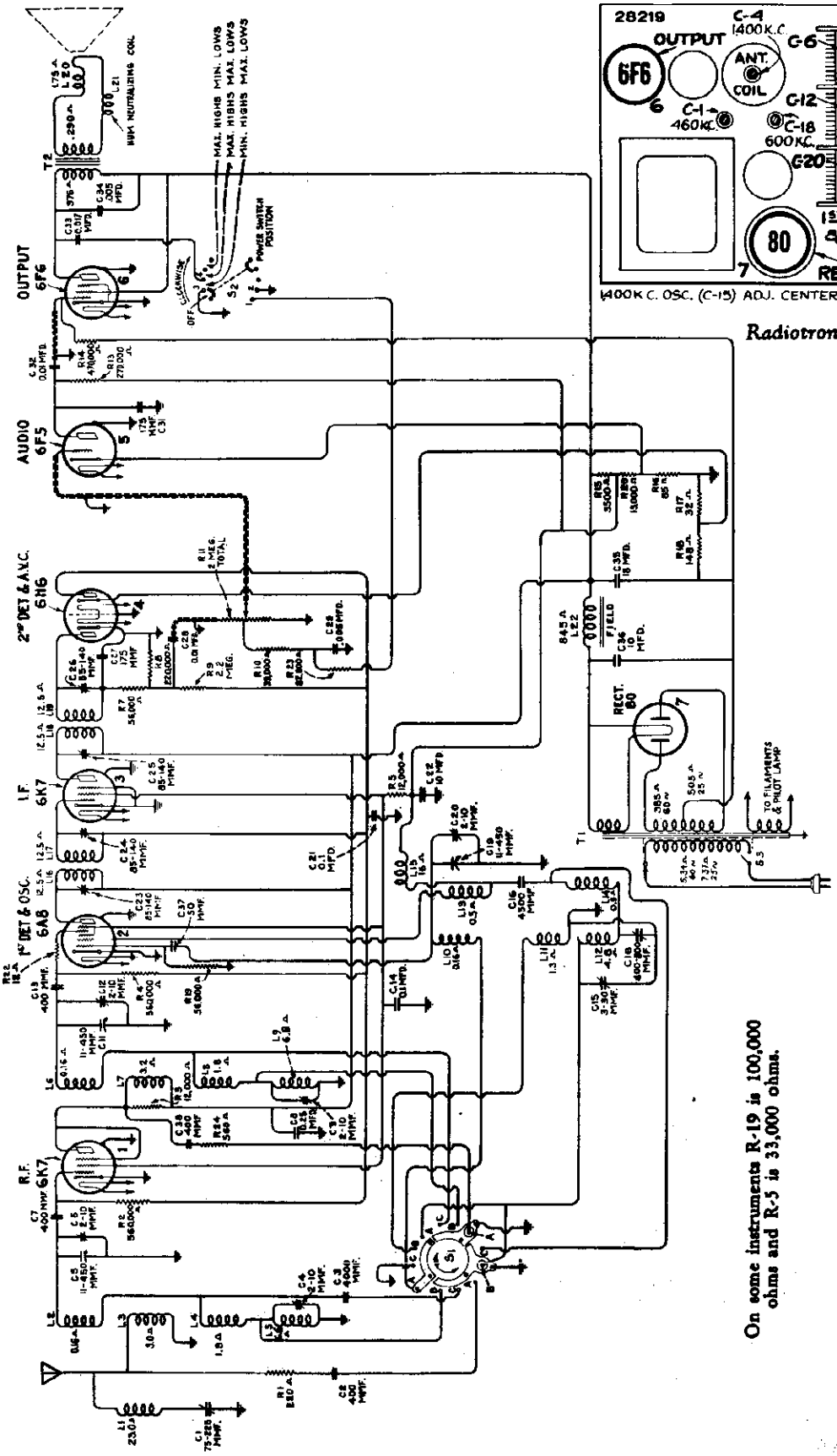

ALIGNMENT FREQUENCIES

Band A	600 kc. (osc.), 1,400 kc. (osc., det., ant.)
Band B	None required
Band C	18,000 kc. (osc., det., ant.)

Intermediate Frequency ..... 460 kc.

FREQUENCY RANGES

Band A	540- 1,625 kc.
Band B	1,625- 5,700 kc.
Band C	5,700-18,000 kc.

POWER SUPPLY RATINGS

Rating A	105-125 Volts, 50-60 Cycles, 100 Watts
Rating B	105-125 Volts, 25-60 Cycles, 105 Watts
Rating C	100-130/140-160/195-250 Volts, 40-60 Cycles, 105 Watts

©John F. Rider, Publisher

MODELS T7-5,C7-6
Chassis Wiring

RCA MFG. CO., INC.

On some instruments R-19 is 100,000 ohms and R-5 is 33,000 ohms.

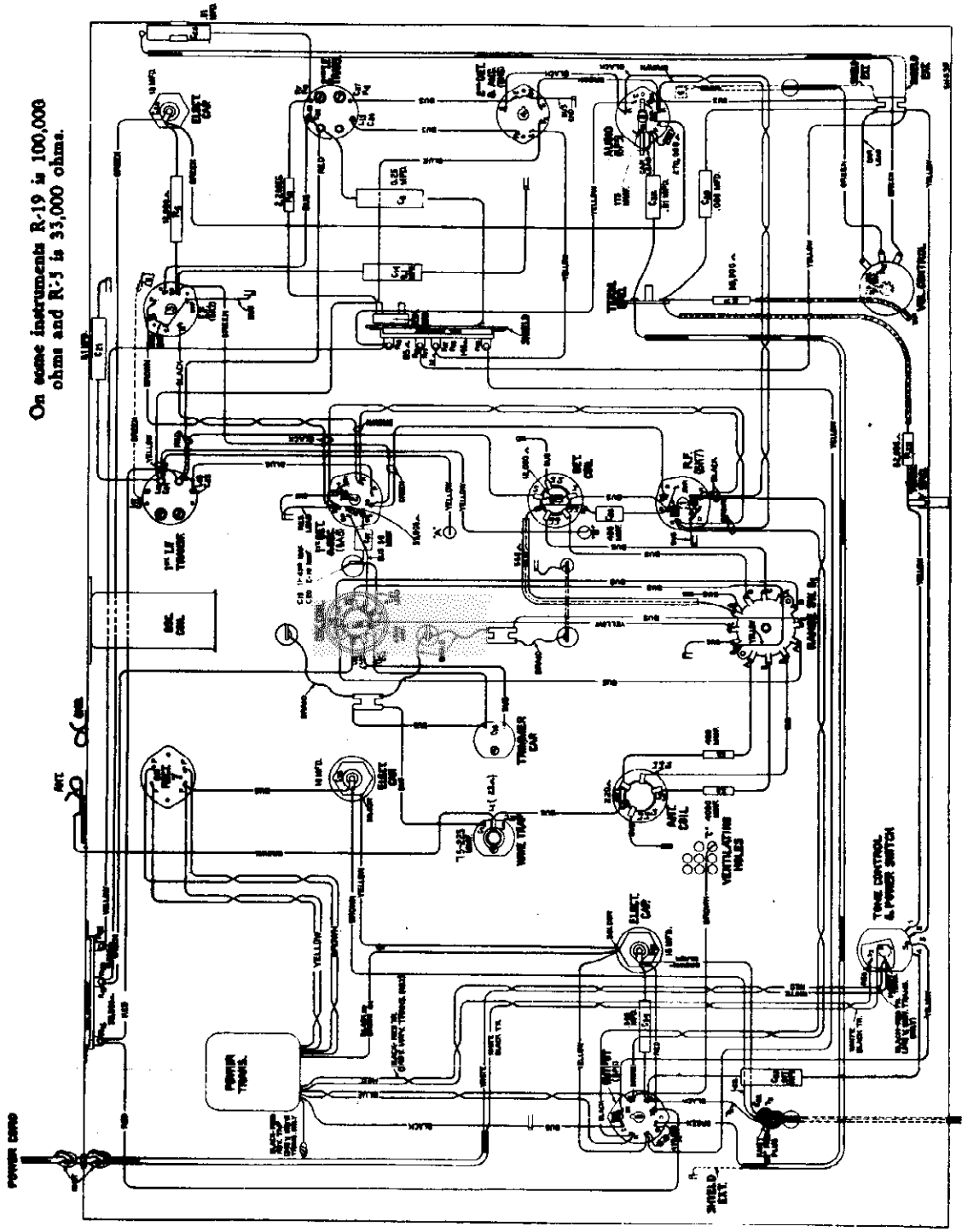

©John F. Rider, Publisher

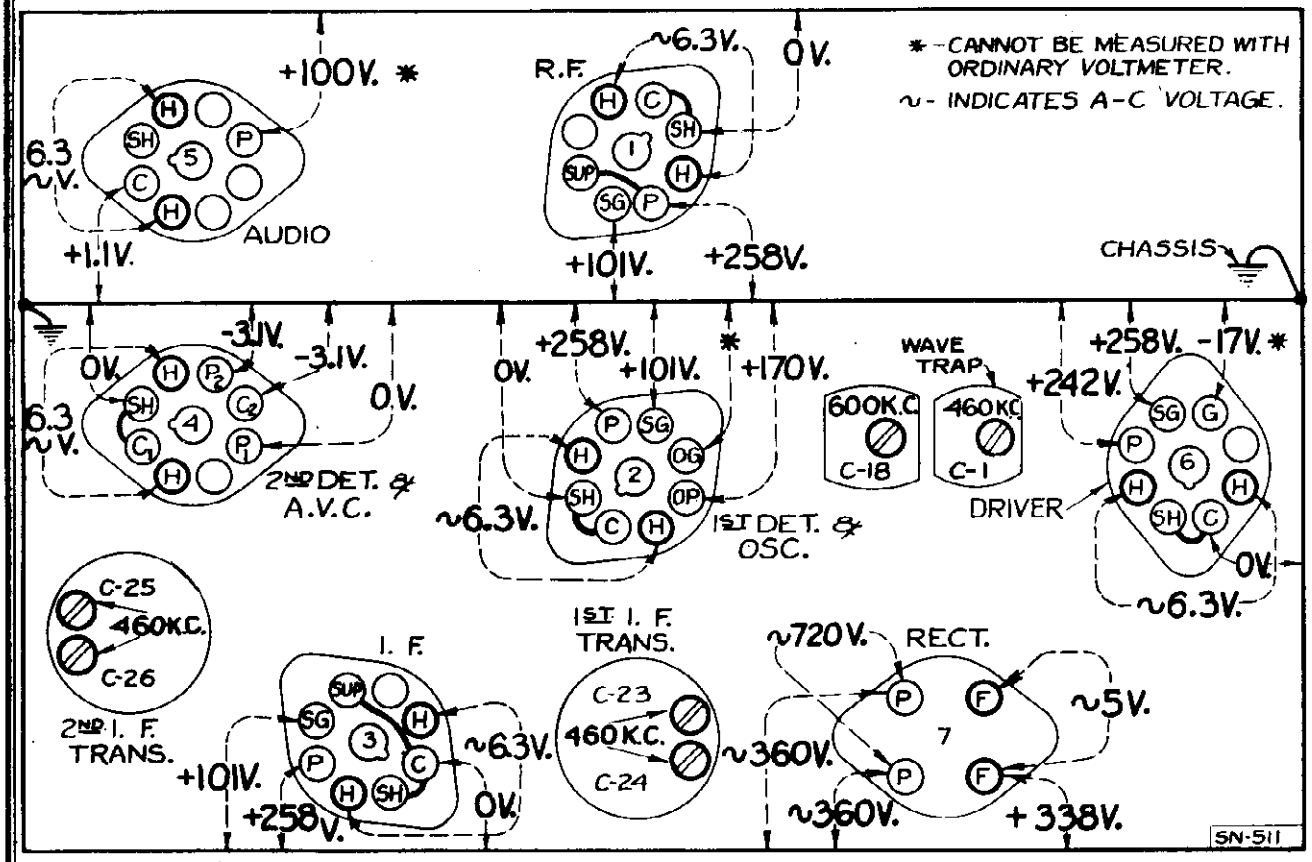

Radiotron Socket Voltages Measured at 115 volts, 60 cycles—No signal input

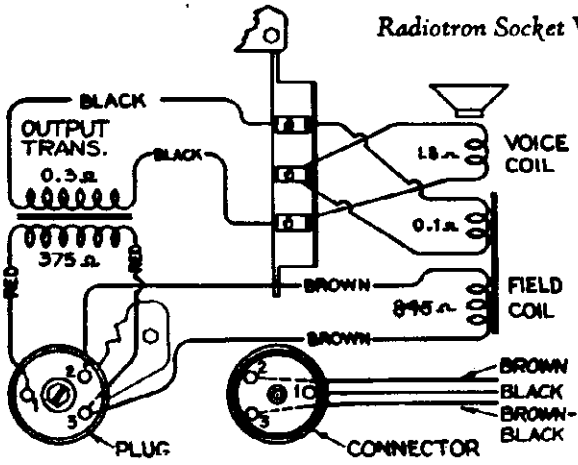

Loudspeaker Wiring

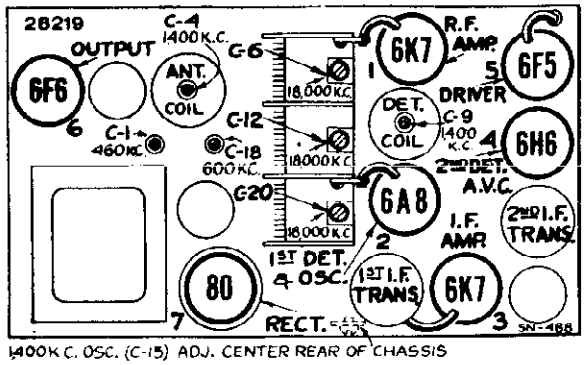

Figure 3—Radiotron and Coil Locations

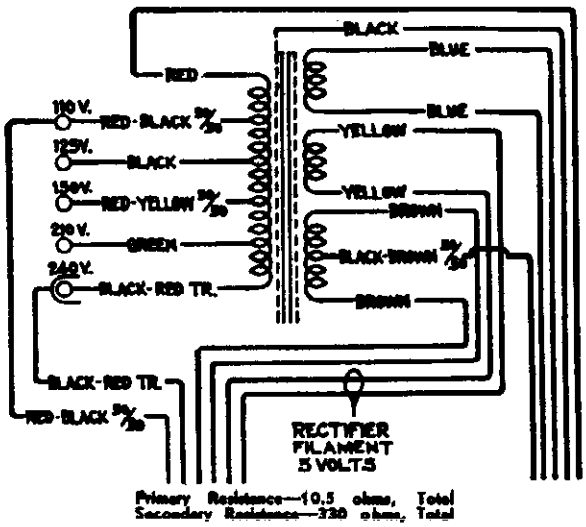

Universal Transformer

©John F. Rider, Publisher

MODELS T7-5, C7-6
Circuit Data, Parts
Alignment, Data

RCA MFG. CO., INC.

General Features

These two models each employ the same seven-tube chassis. They have the new metal tubes. The tuning range is from 540 to 18,000 kc. The coverage includes domestic broadcast, police, aircraft and amateur services and also the important foreign short-wave broadcast bands at 49, 31, 25, 19, and 16 meters. Chassis features include automatic volume control, 3-point tone control, antenna wave trap, and audio tone compensation. A high level of output is available from the receiver for reproduction by the electrodynamic loudspeaker. The table model (T 7-5) uses an 8-inch dynamic speaker and the console model (C 7-6) uses an improved 12-inch dynamic speaker. The tuning dial is an illuminated aero-airplane type. Each band is distinctively marked with a separate color for each band. Positions of the range selector knob are plainly marked on the control panel with letters indicating each band position placed over color strips corresponding to the band colors on the dial. The tuning control is of the dual-ratio type, which permits fast tuning through a 10-to-1 drive ratio and vernier tuning through a 50-to-1 drive ratio. The latter is especially advantageous for accurate tuning of the short-wave stations.

Circuit Arrangement

The conventional Superheterodyne type of circuit, consisting of an r-f stage, a combined first-detector–oscillator stage, a single i-f stage, a diode-detector–automatic-volume-control stage, an audio voltage amplifier stage, an audio power output stage and a high-voltage rectifier power-supply stage, is used.

Tuned Circuits

The antenna coil system and the detector coil system each consist of a single primary and three series-connected secondary windings to provide the three ranges of tuning. The oscillator coil system is similarly wound on a single form. A range selector switch (S-1) is used for connecting the various sections of these three coil systems into the circuit to provide operation on the band desired. The coils are tuned by a variable three-section gang condenser having trimmer capacitors in shunt with each section. There are additional trimmer capacitors across the section of each coil used for Band "A". A series trimmer is also associated with the Band "A" oscillator coil.

The intermediate frequency amplifier system consists of an RCA-6K7 in a transformer-coupled circuit. This stage operates at a basic frequency of 460 kc. Each winding of both i-f transformers (input and output) is tuned by an adjustable trimmer.

Detector and A.V.C.

The modulated signal as obtained from the output of the i-f stage is detected by an RCA-6H6 twin-diode tube. The audio frequency secured by this process is transferred to the a-f system for amplification and final reproduction. The d-c voltage which results from detection of the signal is used for automatic volume control. This voltage, which develops across resistor R-8, is applied as automatic control-grid bias to the r-f, first-detector, and i-f tubes through a suitable resistance filter circuit. The second (auxiliary) diode of the RCA-6H6 is used to supply residual bias for the controlled tubes under conditions of little or no signal. This diode, under such conditions, draws current which flows through resistors R-8 and R-9, thereby maintaining the desired minimum operating bias on such tubes. On application of signal energy above a certain level, however, the auxiliary diode ceases to draw current and the a.v.c. diode takes over the biasing function.

Audio System

The manual volume control consists of an accurately tapered potentiometer in the audio circuit between the output of the detector diode and the input grid of the audio-voltage-amplifier tube. This control has a tone compensating filter connected to it so that the correct aural balance will be obtained at different volume settings.

Resistance-capacitance coupling is used between the first audio stage and the power output stage. The output of the power amplifier is transformer-coupled into the dynamic loudspeaker. High-frequency tone control is effected by a capacitor across the plate circuit of the output tube. Speech-music control is effected by a resistor connected to the compensated volume control circuit. Control of tone is obtained by means of the switch (S-2).

Rectifier

The power required for operation of this receiver is supplied through transformer T-1. This transformer has an efficient electrostatic shield between its primary and secondary windings. This shield prevents interference which is on the power-supply circuit from entering the receiver and conversely reduces the tendency of the receiver to re-radiate into the power circuit. An RCA-80 furnishes the d-c voltages necessary for plate, screen, cathode, and grid potentials. The field winding of the loudspeaker is used as a reactor in the filter circuit from which it simultaneously receives its magnetizing current. The heaters of all Radiotrons are supplied from a low voltage (6.3 volt) winding on the power transformer. One side of this winding is at ground potential.

SERVICE DATA

The various diagrams of this bulletin contain such information as will be needed to isolate causes for defective operation when such a condition develops. Values of the resistors, capacitors, coils, etc., are indicated adjacent to the symbols signifying these parts on the diagrams. Identification titles, such as R-3, L-2, C-1, etc., are provided for reference between the diagrams and the replacement parts list. Locating of the parts in the schematic circuit is facilitated by the fact that the numerical titles increase from left to right on the diagram. The coils, reactors, and transformer windings are rated in terms of their d-c resistances only. Resistances of less than one ohm are generally omitted.

Alignment Procedure

Precise alignment is vital to the proper functioning of this receiver. There are four trimming adjustments provided in the i-f system, three in the oscillator coil system, two in the detector coil system, and two in the antenna coil system. Each of these trimmers has been accurately adjusted during manufacture and should remain properly aligned unless affected by abnormal conditions of climate or have been altered for service purposes. Incorrect alignment is usually evidenced by loss of sensitivity, improper tone quality, and poor selectivity. These indications will generally be present together.

The correct performance of the receiver can only be obtained when the alignment is performed with adequate and reliable test apparatus. The manufacturer of this instrument has a complete assortment of such service equipment available. This equipment, illustrated and described on a separate page of this booklet, may be purchased from authorized distributors and dealers.

An oscillator (signal generator) is required as a source of the specified alignment frequencies. Visual indication of the receiver output during the adjustments is necessary to enable the workman to obtain an accuracy of alignment which is not possible by listening to the signal. The RCA Victor Stock No. 9995 Full-Range Oscillator and the RCA Victor Stock No. 4317 Neon Output Indicator are especially suitable and fulfill the above requirements.

The following procedure should be followed in adjusting the various trimmer capacitors:

I-F Trimmer Adjustments

The four trimmers of the two i-f transformers are located as shown by Figure 4. Each must be aligned to a basic frequency of 460 kc. To do this, attach the Output Indicator across the voice coil circuit or across the output transformer primary. Connect the output of the test oscillator between the control-grid of the RCA-6A8 first detector tube and chassis-ground. Tune the oscillator to 460 kc. Advance the receiver volume control to its full-on position and adjust the receiver tuning control to a point within its range where no interference is encountered either from local broadcast stations or the heterodyne oscillator. Increase the output of the test oscillator until a slight indication is apparent on the output indicator. Then adjust the two trimmers, C-25 and C-26, of the second i-f transformer to produce maximum (peak) indicated receiver output. Then, adjust the two trimmers, C-23 and C-24, of the first i-f transformer for maximum (peak) receiver output as shown by the indicating device. During these adjustments, regulate the test oscillator output so that the indication is always as low as possible. By doing so, broadness of tuning due to a.v.c. action will be avoided. It is advisable to repeat the adjustment of all i-f trimmers a second time to assure that the inter-action between them has not disturbed the original adjustment.

R-F Trimmer Adjustments

The seven trimmers associated with the r-f, first detector, and oscillator tuned circuits have their locations shown by Figure 3. The three trimmers which are at all times directly in shunt with the variable tuning condenser necessitate that the high-frequency range (Band C) be aligned first. The range selector switch should, therefore, be turned to its Band C position for the first adjustment. The Output Indicator should be left connected to the output system. Attach the output terminals of the test oscillator to the antenna and ground terminals of the receiver.

Calibrate the dial by rotating the tuning control until the variable condenser plates are in their full mesh (maximum capacity) position and adjusting the dial pointer so that its end points to the *horizontal* graduation (530 kc.) at the low frequency end of the Band A scale.

Proceed further as follows:

(a) Adjust the test oscillator to 18,000 kc. and set the receiver tuning control to a dial reading of 18,000 kc.

(b) Regulate the output of the test oscillator until a slight indication is perceptible at the receiver output. Then adjust the trimmer, C-20, on the oscillator section of the variable condenser to the point at which it produces maximum indicated receiver output. Two points may be found, each of which produces such a maximum. The one of *maximum trimmer capacitance* is correct and should be used. (The oscillator will be 460 kc. below the signal frequency at this adjustment point.)

(c) Adjust the trimmer, C-12, of the detector section of the variable condenser, simultaneously rocking the receiver tuning control backward and forward through the 18,000 kc. input signal, until maximum receiver output results from these combined operations. Rocking of the variable condenser will prevent inaccurate adjustment which would otherwise be caused by the inter-action between the heterodyne oscillator circuit and the detector tuned circuit.

(d) With the receiver tuning control set to 18,000 kc. adjust the trimmer, C-6, on the antenna section of the variable condenser to the point which produces maximum (peak) indicated receiver output.

(e) Change the receiver range selector to its Band A position and set the receiver tuning control to a dial reading of 1,400 kc. Tune the test oscillator to 1,400 kc. and regulate its output to produce a slight indication on the receiver output indicating device.

(f) Adjust the high frequency trimmers of the Band A oscillator, detector, and antenna coils, C-15, C-9, and C-4 respectively, to the points at which each produces maximum indicated receiver output.

(g) Shift the test oscillator frequency to 600 kc. and tune the receiver to pick up this signal, disregarding the dial reading at which it is best received.

(h) Tune the low frequency trimmer, C-18, of the oscillator Band A coil, simultaneously rocking the tuning control of the receiver backward and forward through the signal, until maximum indicated receiver output results from these combined operations. The adjustment of C-20, C-12, and C-6 should be corrected at 18,000 kc. as in (b), (c), and (d); also C-15, C-9, and C-4 should be corrected at 1,400 kc. as in (f) to compensate for any changes caused by the adjustment of the low frequency oscillator coil trimmer.

Wave-Trap Adjustment

With the receiver in operation using its normal antenna, tune station selector to the point at which the intermediate frequency interference is most intense. Then adjust the wave trap trimmer to the point which causes maximum suppression of the interference. This trimmer is adjusted to 460 kc. during manufacture, however, local conditions may require a readjustment, depending upon the interfering frequency.

Radiotron Socket Voltages

The voltage values indicated from the Radiotron socket contacts to chassis on Figure 4 will assist in the location of causes for faulty operation. Each value as specified should hold within ± 20% when the receiver is normally operative at its rated supply voltage. Variations in excess of this limit will usually be indicative of trouble in the basic circuits. The voltages given are actual operating values and do not allow for inaccuracies which may be caused by the loading effect of a voltmeter's internal resistance. This resistance should be duly considered for all readings. The amount of circuit resistance shunting the meter during measurement will determine the accuracy to be obtained, the error increasing as the meter resistance becomes comparable to or less than the circuit resistance. For the majority of readings, a meter having an internal resistance of 1000 ohms per volt will be satisfactory when the range used for each reading is chosen as high as possible consistent with good readability.

Universal Transformer

The special transformer used on some receivers of this type is adaptable to several ranges of voltage as given under Rating C of Electrical Specifications. Its schematic and wiring are shown by Figure 5. Terminals are provided at the top of the transformer case, for changing the primary connections to suit the voltage available. Note that a 110-volt tap is brought out separately for supplying a phonograph motor.

Electrical Specifications

FREQUENCY RANGES

Band A	540- 1,625 kc.
Band B	1,625- 5,700 kc.
Band C	5,700-18,000 kc.
Intermediate Frequency	**460 kc**

ALIGNMENT FREQUENCIES

Band A	600 kc. (osc.), 1,400 kc. (osc., det., ant.)
Band B	None required
Band C	18,000 kc. (osc., det., ant.)

RADIOTRON COMPLEMENT

(1) RCA-6K7	Radio-Frequency Amplifier
(2) RCA-6A8	First Detector-Oscillator
(3) RCA-6K7	Intermediate Amplifier
(4) RCA-6H6	Second Detector-A.V.C.
(5) RCA-6F5	Audio Voltage Amplifier
(6) RCA-6F6	Audio Power Amplifier
(7) RCA-80	Full-Wave Rectifier

LOUDSPEAKER

Type	Electrodynamic
Voice Coil Impedance	7.25 ohms at 400 cycles

POWER OUTPUT

Undistorted	2.25 Watts
Maximum	3.0 Watts

POWER SUPPLY RATINGS

Rating A	105-125 Volts, 50-60 Cycles, 100 Watts
Rating B	105-125 Volts, 25-60 Cycles, 105 Watts
Rating C	100-130/140-160/195-250 Volts, 40-60 Cycles, 105 Watts

Mechanical Specifications

Tuning Drive Ratios ..... 10-to-1 and 50-to-1
Chassis Base Dimensions ..... 13⅝" x 7⅝ x 2½ inches

	Model T 7-5	Model C 7-6
Height	19¾ inches	38 inches
Width	13⅝ inches	24 inches
Depth	9⅜ inches	11 inches
Weight (Net)	30½ pounds	49½ pounds
Weight (Shipping)	36 pounds	68 pounds

Operating Controls ..... (1) Volume, (2) Tuning, (3) Range Selector, (4) Power Switch-Tone

REPLACEMENT PARTS

Insist on genuine factory tested parts, which are readily identified and may be purchased from authorized dealers.

Stock No.	Description	List Price
	RECEIVER ASSEMBLIES	
5237	Bushing—Variable tuning condenser mounting bushing assembly—Package of 5	.80
11359	Cap—Contact cap—Package of 5	.20
11463	Capacitor—Adjustable capacitor—(C18)	.48
11289	Capacitor—50 MMfd—(C37)	.16
5116	Capacitor—.0173 MMfd—(C31)	.18
11290	Capacitor—400 MMfd—(C2, C9, C13, C38)	.23
11401	Capacitor—4000 MMfd—(C5)	.38
4848	Capacitor—.005 Mfd—(C29, C34)	.30
4906	Capacitor—.017 Mfd—(C33)	.25
11393	Capacitor—.01 Mfd—(C14)	.18
4838	Capacitor—.01 Mfd—(C32)	.25
4839	Capacitor—.01 Mfd—(C16)	.28
4841	Capacitor—.04 Mfd—(C21)	.22
5170	Capacitor—.025 Mfd—(C4)	.23
11240	Capacitor—.10 Mfd—(C36)	.108
11387	Capacitor—.10 Mfd—(C22)	.86
7212	Capacitor—.18 Mfd—(C35)	1.18
5238	Clip—Antenna terminal board with clip, insulating strip and eyelet	.14
11600	Coil—Antenna coil (L2, L3, L4, L5, C4, R1)	1.76
11601	Coil—Detector coil—(L6, L7, L8, L9, C8, R3)	1.78
11602	Coil—Oscillator coil—(L10, L11, L12, L13, L14, C15, C15, C16)	2.15
11385	Condenser—Three gang variable tuning condenser—(C5, C6, C11, C12, C19, C20)	5.02
11672	Dial—Station selector dial	.78
11394	Front—Chassis front assembly—Package of 2	.70
11396	Indicator—Station selector indicator pointer	.25
5216	Lamp—Dial lamp—Package of 5	.70
11393	Resistor—Voltage divider resistor—comprising one 3,500 ohm and one 13,000 ohm sections—(R15, R20)	.76
11329	Resistor—Voltage divider resistor—comprising one 148 ohm, one 32 ohm and one 85 ohm sections—(R16, R17, R18)	.52
11369	Resistor—12 ohms—flexible wire wound plate with contact cap—(R13)	.22
11324	Resistor—360 ohms—Carbon type—½ watt—(R21)—Package of 5	1.00
3066	Resistor—12,000 ohms—Carbon type—1 watt—(R3*)—Package of 5	1.10
11321	Resistor—18,000 ohms—Carbon type—½ watt—(R10)—Package of 5	1.00
11282	Resistor—36,000 ohms—Carbon type—1/10 watt—(R19*)—Package of 5	.75
11365	Resistor—81,000 ohms—Carbon type—¼ watt—(R11)—Package of 5	1.00
11323	Resistor—270,000 ohms—Carbon type—¼ watt—(R12)—Package of 5	1.00
11173	Resistor—470,000 ohms—Carbon type—½ watt—(R14)—Package of 5	1.00
11397	Resistor—560,000 ohms—Carbon type—1/10 watt—(R5, R6)—Package of 5	.75
11026	Resistor—2.2 megohms—Carbon type—½ watt—(R9)—Package of 5	1.00
11603	Shield—Antenna or detector coil shield	.24
11604	Shield—Oscillator coil shield	.24
11363	Shield—Receiver Radiotron shield	.30
11390	Shield—Intermediate frequency transformer shield	.25
11199	Socket—Dial lamp socket	.14
4794	Socket—4-contact rectifier Radiotron socket	.15
11198	Socket—7-contact 6K7—6F5—or 6H6 Radiotron socket	.15
11196	Socket—8-contact 6A8 or 6F6 Radiotron socket	.15
11386	Switch—Range switch—(S1)	1.16
11392	Switch—Tone control and power switch assembly—(S2, S3)	1.14
11388	Transformer—First intermediate frequency transformer—(L16, L17, C25, C26)	1.90
11389	Transformer—Second intermediate frequency transformer—(L18, L19, C23, C24, C27, R7, R8)	3.02
11384	Transformer—Power transformer—105-125 volts—50-60 cycles—(T1)	4.65
11723	Transformer—Power transformer—105-125 volts—25-50 cycles	6.60

REPLACEMENT PARTS (Continued)

Stock No.	Description	List Price
11727	Transformer—Power transformer—105-130, 140-160, 195-250 volts—40-60 cycles	6.60
11391	Trap—Wave trap—(L1, C1)	1.22
11319	Volume Control—(R11)	1.20
	MISCELLANEOUS ASSEMBLIES	
11378	Escutcheon—Station selector escutcheon and crystal	.90
11382	Knob—Range switch knob—Package of 5	.50
11610	Knob—Station selector knob assembly—comprising one small and one large knob—Package of 5	1.00
11347	Knob—Volume control or tone control knob—Package of 5	.95
11310	Screw—Chassis mounting screw assembly—Console Model—Package of 4	.38
11377	Screw—Chassis mounting screw assembly—Table Model—Package of 4	.52
11349	Spring—Retaining spring for knobs, Stock No. 11347, No. 11382 and small knob in Stock No. 11610—Package of 5	.15
4981	Spring—Retaining spring for large knob in Stock No. 11610—Package of 10	.26
	REPRODUCER ASSEMBLIES (Table Model)	
11332	Board—Terminal board with two lead wire clips	.18
11231	Bolt—Yoke and core assembly bolt and nut	.16
8060	Bracket—Output transformer mounting bracket	.14
11389	Cap—Cone center suspension clamping nut and screw assembly—Package of 3	.23
11354	Coil—Field coil—(L22)	2.00
11233	Coil—Neutralizing coil—(L21)	.30
11235	Cone—Reproducer cone—(L20)—Package of 3	3.50
5119	Connector—3-contact female connector for reproducer cable	.25
5118	Connector—3-contact male connector for reproducer	.25
9818	Reproducer—Complete	6.40
11353	Transformer—Output transformer—(T2)	1.56
11330	Washer—"Binders board" "C" washers—used to hold field coil securely—Package of 5	.18
	REPRODUCER ASSEMBLIES (Console Model)	
11337	Board—Terminal board assembly with two lead wire clips	.18
11231	Bolt—Reproducer yoke and core assembly bolt and nut	.16
8060	Bracket—Output transformer mounting bracket	.14
11237	Clamp—Cone center suspension clamping nut and screw assembly—Package of 3	.23
11354	Coil—Field coil—(L23)	2.00
11233	Coil—Neutralizing coil—(L21)	.30
11238	Cone—Reproducer cone—(L20)—Package of 3	3.85
5118	Connector—3-contact male connector for reproducer	.25
5119	Connector—3-contact female connector for reproducer cable	.25
9819	Reproducer—Complete	6.05
11351	Transformer—Output transformer—(T2)	1.56
11330	Washer—"Binders board" "C" washers—used to hold field coil securely—Package of 5	.18

***THE FOLLOWING ARE USED IN SOME MODELS:**

8118	Resistor—100,000 ohms—Carbon type—¼ watt—(R19*)—Package of 5	1.00
8072	Resistor—13,000 ohms—Carbon type—½ watt—(R19*)—Package of 5	.80

— NOTES —

(1) Boat noises or heterodyning (whistles) may be encountered in some instances on these receivers due to excessive antenna capacitance. This condition may be corrected by reducing the size of the antenna or by inserting a 150 mmfd. capacitor in series with the antenna lead. This may be accomplished in the receiver by removing the bus lead which connects from the antenna terminal to the wave trap inductance L-1 and inserting the condenser between these points.

©John F. Rider, Publisher

©John F. Rider, Publisher

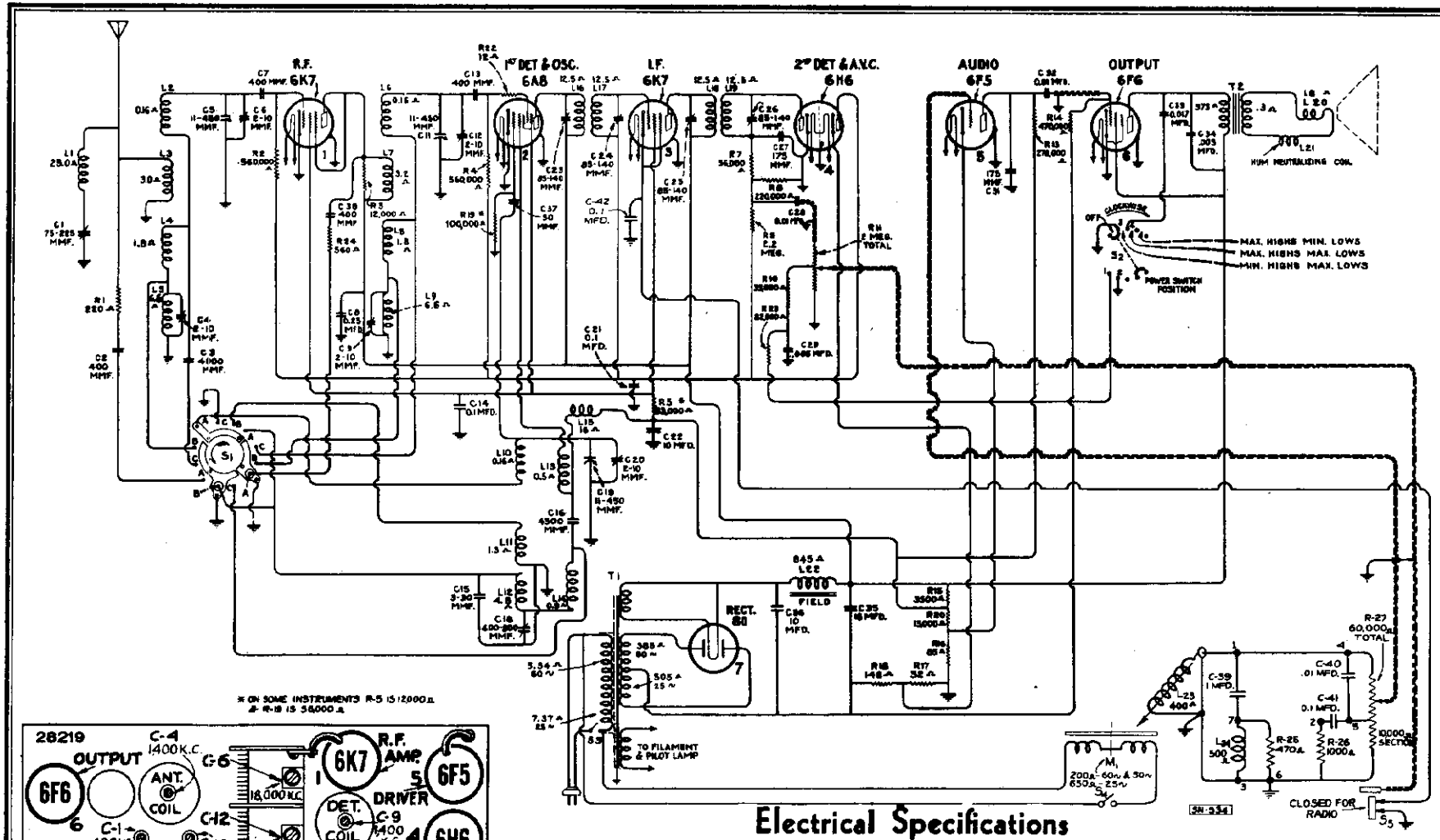

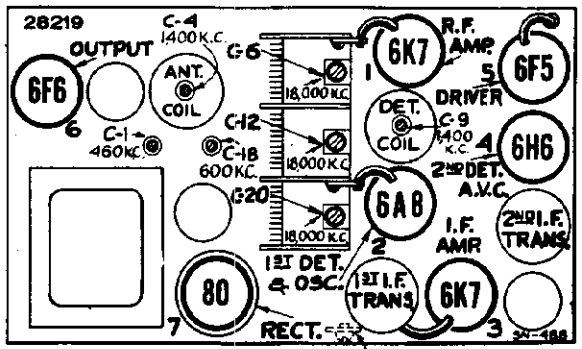

1400 K.C. OSC. (C-15) ADJ. CENTER REAR OF CHASSIS

Figure 1—Radiotron and Coil Locations

Electrical Specifications

Frequency Ranges

Band A	540- 1,625 kc.
Band B	1,625- 5,700 kc.
Band C	5,700-18,000 kc.

Alignment Frequencies

Band A	600 kc. (osc.), 1,400 kc. (osc., det., ant.)
Band B	None required
Band C	18,000 kc. (osc., det., ant.)

Intermediate Frequency ..... 460 kc

Loudspeaker

Type	12-inch Electrodynamic
Voice Coil Impedance	2¼ Ohms at 400 Cycles

Power Output Ratings

Undistorted	2¼ Watts
Maximum	5 Watts

MODEL D7-7
Chassis Wiring
Pickup

RCA MFG. CO., INC.

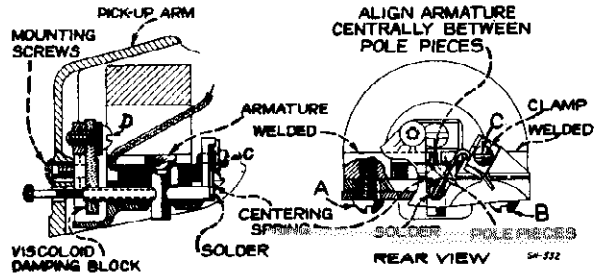

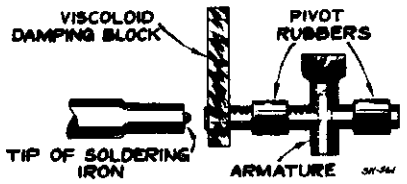

Figure 10—Special Soldering-Iron Tip

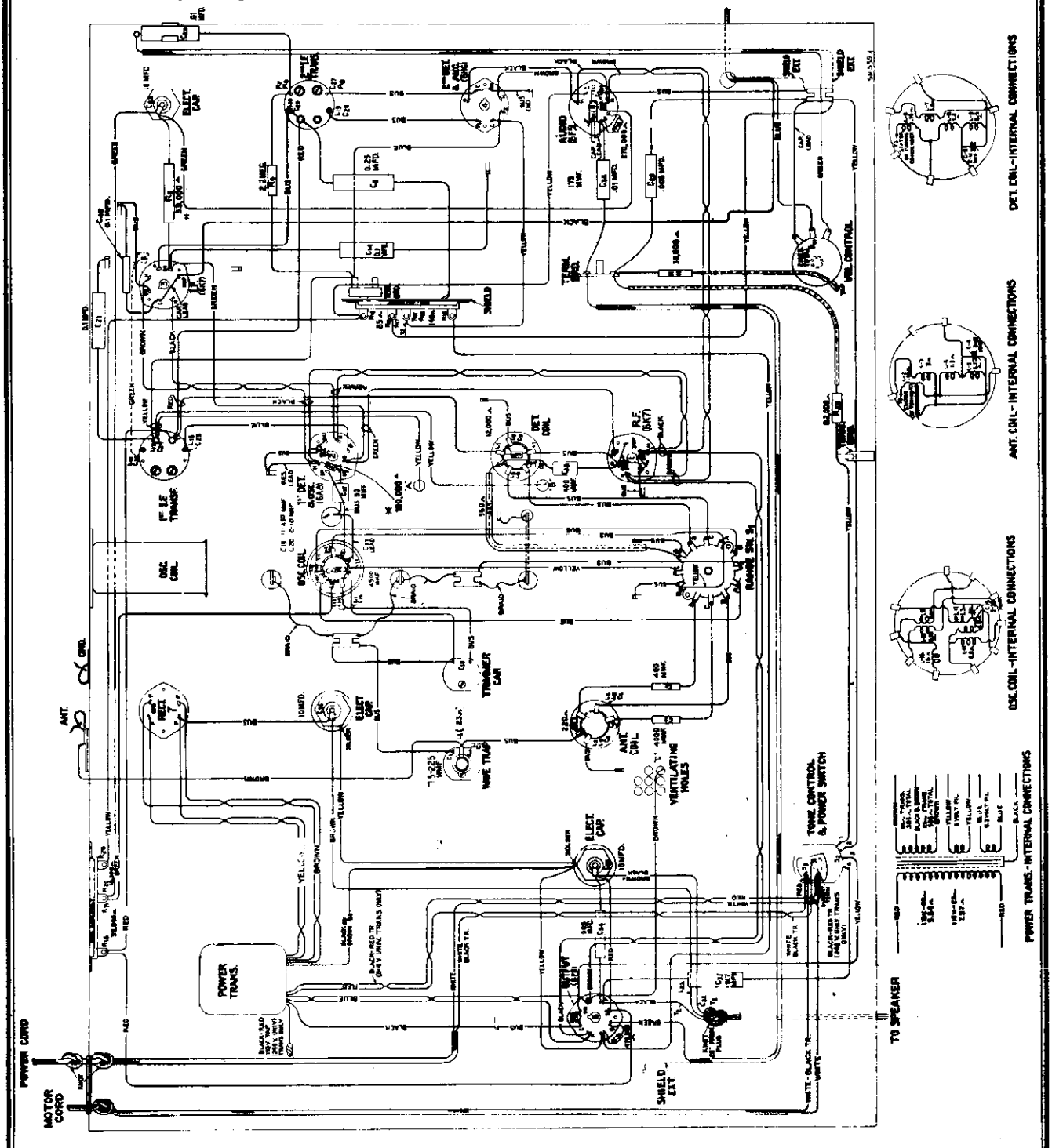

©John F. Rider, Publisher

©John F. Rider, Publisher

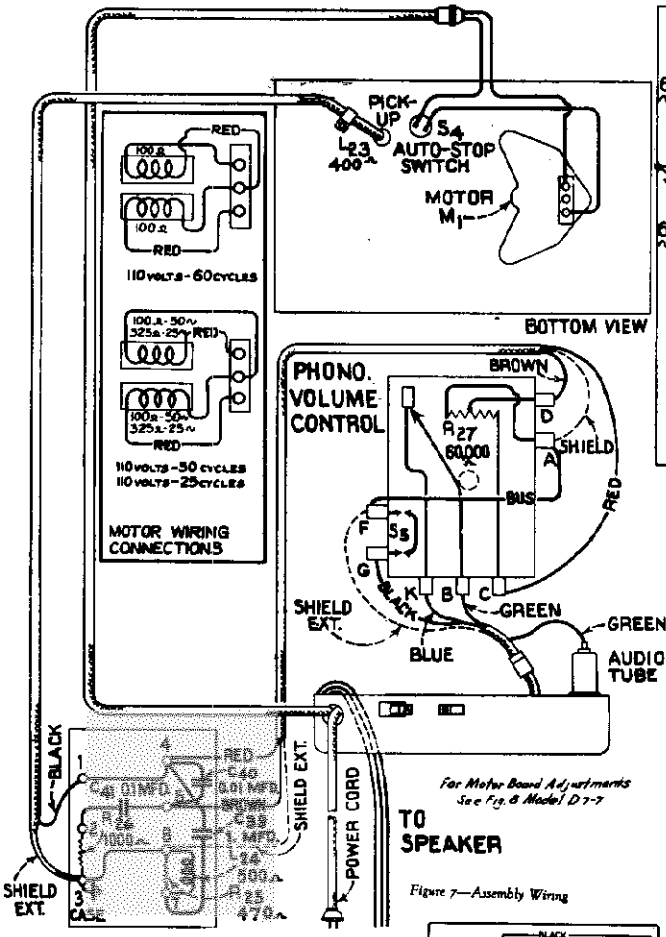

Figure 4—Loudspeaker Wiring

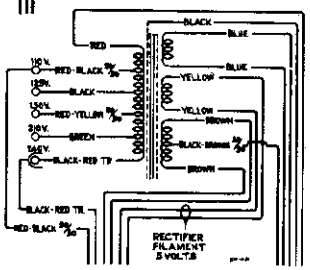

Figure 5—Universal Transformer

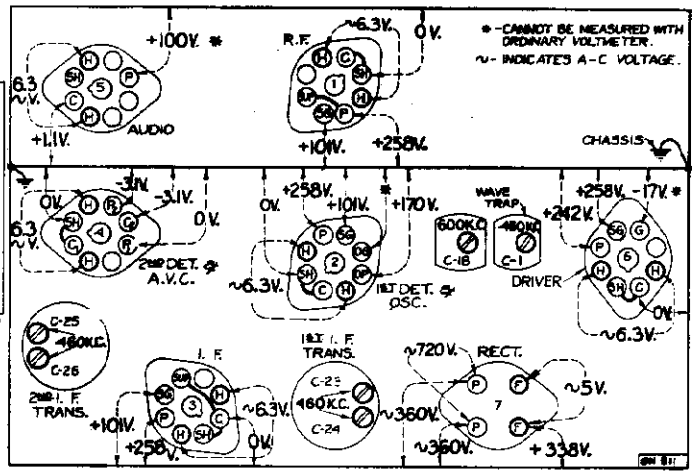

Figure 6—Radiotron Socket Voltages

Measured at 115 volts, 60 cycles—No signal input

Phonograph Mechanism

The phonograph mechanism is of the manually operated type, having a synchronous motor which rotates the turntable at a speed of 78 R.P.M. The 10-inch turntable will accommodate either the 10-inch or 12-inch phonograph records. The pickup mechanism and tone arm are combined as one unit. The instrument may be purchased with any one of five ratings as specified under Electrical Specifications. *It is important that a machine of any particular rating be operated at the frequency and voltage for which it is rated.* Attempts to operate at ratings other than specified for the particular instrument will result in improper reproduction from the phonograph and may result in damage to both the phonograph motor and radio receiver. An automatic switch is provided to turn "off" the phonograph motor at the completion of record play.

Tuning Dial

The tuning dial is an illuminated semi-airplane type. Each band is distinctively marked with a separate color for each band. Positions of the range selector knob are plainly marked on the control panel with letters indicating each band position placed over color strips corresponding to the band colors on the dial. The tuning control is of the dual-ratio type which permits fast tuning through a 10-to-1 drive ratio and vernier tuning through a 50-to-1 drive ratio. The latter is especially advantageous for accurate tuning of the short-wave stations. The new shock-proof condenser mounting reduces microphonic tendencies to a minimum.

Circuit Arrangement

The conventional Superheterodyne type of circuit, consisting of an r-f stage, a combined first-detector-oscillator stage, a single i-f stage, a diode-detector-automatic-volume-control stage, an audio voltage amplifier stage, an audio power output stage and a high-voltage rectifier power-supply stage, is used.

Tuned Circuits

The antenna coil system and the detector coil system each consist of a single primary and three series-connected secondary windings to provide the three ranges of tuning. The oscillator coil system is similarly wound on a single form. A range selector switch (S-1) is used for connecting the various sections of these three coil systems into the circuit to provide operation on the band desired. The coils are tuned by a variable three-section gang condenser having trimmer capacitors in shunt with each section. There are additional trimmer capacitors across the section of each coil used for Band "A." A series trimmer is also associated with the Band "A" oscillator coil.

The intermediate frequency amplifier system consists of an RCA-6K7 in a transformer-coupled circuit. This stage operates at a basic frequency of 460 kc. Each winding of both i-f transformers (input and output) is tuned by an adjustable trimmer.

Detector and A.V.C.

The modulated signal as obtained from the output of the i-f stage is detected by an RCA-6H6 twin-diode tube. The audio frequency secured by this process is transferred to the a-f system for amplification and final reproduction. The d-c voltage which results from detection of the signal is used for automatic volume control. This voltage, which develops across resistor R-8, is applied as automatic control-grid bias to the r-f, first-detector, and i-f tubes through a suitable resistance filter circuit. The second (auxiliary) diode of the RCA-6H6 is used to supply residual bias for the controlled tubes under conditions of little or no signal. This diode, under such conditions, draws current which flows through resistors R-8 and R-9, thereby maintaining the desired minimum operating bias on such tubes. On application of signal energy above a certain level, however, the auxiliary bias-diode ceases to draw current and the a.v.c. diode takes over the biasing function.

Audio System

The manual volume control consists of an acoustically tapered potentiometer in the audio circuit between the output of the detector diode and the input grid of the audio-voltage-amplifier tube. This control has a tone compensating filter connected to it so that the correct aural balance will be obtained at different volume settings.

Resistance-capacitance coupling is used between the first audio stage and the power output stage. The output of the power amplifier is transformer-coupled into the dynamic loudspeaker. High-frequency tone control is effected by a capacitor across the plate circuit of the output tube. Speech-music control is effected by a resistor connected to the compensated volume control circuit. Control of tone is obtained by means of the switch (S-2).

Rectifier

The power required for operation of this receiver is supplied through transformer T-1. This transformer has an efficient electrostatic shield between its primary and secondary windings. This shield prevents interference which is on the power-supply circuit from entering the receiver and conversely reduces the tendency of the receiver to re-radiate into the power circuit. An RCA-80 furnishes the d-c voltages necessary for plate, screen, cathode, and grid potentials.

The field winding of the loudspeaker is used as a reactor in the filter circuit from which it simultaneously receives its magnetizing current. The heaters of all Radiotrons are supplied from a low voltage (6.3 volt) winding on the power transformer. One side of this winding is at ground potential.

SERVICE DATA

The various diagrams of this bulletin contain such information as will be needed to isolate causes for defective operation when such a condition develops. Values of the resistors, capacitors, coils, etc., are indicated adjacent to the symbols signifying these parts on the diagrams. Identification titles, such as R-3, L-2, C-1, etc., are provided for reference between the diagrams and the replacement parts list. Locating of the parts in the schematic circuit is facilitated by the fact that the numerical titles increase from left to right on the diagram. The coils, reactors, and transformer windings are rated in terms of their d-c resistances only. Resistances of less than one ohm are generally omitted.

Alignment Procedure

Precise alignment is vital to the proper functioning of this receiver. There are four trimming adjustments provided in the i-f system, three in the oscillator coil system, two in the detector coil system, and two in the antenna coil system. Each of these trimmers has been accurately adjusted during manufacture and should remain properly aligned unless affected by abnormal conditions of climate or have been altered for service purposes. Incorrect alignment is usually evidenced by loss of sensitivity, improper tone quality, and poor selectivity. These indications will generally be present together.

The correct performance of the receiver can only be obtained when the alignment is performed with adequate and reliable test apparatus. The manufacturer of this instrument has a complete assortment of such service equipment available. This equipment, illustrated and described on a separate page of this booklet, may be purchased from authorized distributors and dealers.

An oscillator (signal generator) is required as a source of the specified alignment frequencies. Visual indication of the receiver output during the adjustments is necessary to enable the serviceman to obtain an accuracy of alignment which is not possible by listening to the signal. **The RCA Victor Stock No. 9595 Full-Range Oscillator and the RCA Victor Stock No. 4317 Neon Output Indicator are especially suitable and fulfill the above requirements.**

The following procedure should be followed in adjusting the various trimmer capacitors:

I-F Trimmer Adjustments

The four trimmers of the two i-f transformers are located as shown by Figure 6. Each must be aligned to a basic frequency of 460 kc. To do this, attach the Output Indicator across the voice coil circuit or across the output transformer primary. Connect the output of the test oscillator between the control-grid of the RCA-6A8 first detector tube and chassis-ground. Tune the oscillator to 460 kc. Advance the receiver volume control to its full-on position and adjust the receiver tuning control to a point within its range where no interference is encountered either from local broadcast stations or the heterodyne osci

MODEL D7-7
Alignment, Part 2
Parts List

RCA MFG. CO., INC.

later. Increase the output of the test oscillator until a slight indication is apparent on the output indicator. Then adjust the two trimmers, C-25 and C-26, of the second i-f transformer to produce maximum (peak) indicated receiver output. Then, adjust the two trimmers, C-23 and C-24, of the first i-f transformer for maximum (peak) receiver output as shown by the indicating device. During these adjustments, regulate the test oscillator output so that the indication is always as low as possible. By doing so, broadness of tuning due to a.v.c. action will be avoided. It is advisable to repeat the adjustment of all i-f trimmers a second time to assure that the inter-action between them has not disturbed the original adjustment.

R-F Trimmer Adjustments

The seven trimmers associated with the r-f, first detector, and oscillator tuned circuits have their locations shown by Figure 1. The three trimmers which are at all times directly in shunt with the variable tuning condenser necessitate that the high-frequency range (Band C) be aligned first. The range selector switch should, therefore, be turned to its Band C position for the first adjustment. The Output Indicator should be left connected to the output system. Attach the output terminals of the test oscillator to the antenna and ground terminals of the receiver.

Calibrate the dial by rotating the tuning control until the variable condenser plates are in their full mesh (maximum capacity) position and adjusting the dial pointer so that its end points to the *horizontal* graduation (130 kc.) at the low frequency end of the Band A scale.

Proceed further as follows:

(a) Adjust the test oscillator to 18,000 kc. and set the receiver tuning control to a dial reading of 18,000 kc.

(b) Regulate the output of the test oscillator until a slight indication is perceptible at the receiver output. Then adjust the trimmer, C-20, on the oscillator section of the variable condenser to the point at which it produces maximum indicated receiver output. Two points may be found, each of which produces such a maximum. The one of *maximum trimmer capacitance* is correct and should be used. (The oscillator will be 460 kc. below the signal frequency at this adjustment point.)

(c) Adjust the trimmer, C-12, of the detector section of the variable condenser, simultaneously rocking the receiver tuning control backward and forward through the 18,000 kc. input signal, until maximum receiver output results from these combined operations. Rocking of the variable condenser will prevent inaccurate adjustment which would otherwise be caused by the inter-action between the heterodyne oscillator circuit and the detector tuned circuit.

(d) With the receiver tuning control set to 18,000 kc. adjust the trimmer, C-6, on the antenna section of the variable condenser to the point which produces maximum (peak) indicated receiver output.

(e) Change the receiver range selector to its Band A position and set the receiver tuning control to a dial reading of 1,400 kc. Tune the test oscillator to 1,400 kc. and regulate its output to produce a slight indication on the receiver output indicating device.

(f) Adjust the high frequency trimmers of the Band A oscillator, detector, and antenna coils, C-15, C-9, and C-4 respectively, to the points at which each produces maximum indicated receiver output.

(g) Shift the test oscillator frequency to 600 kc. and tune the receiver to pick up this signal, disregarding the dial reading at which it is best received.

(h) Tune the low frequency trimmer, C-18, of the oscillator Band A coil, simultaneously rocking the tuning control of the receiver backward and forward through the signal, until maximum indicated receiver output results from these combined operations. The adjustment of C-20, C-12, and C-6 should be corrected at 18,000 kc. as in (b), (c), and (d); also C-15, C-9, and C-4 should be corrected at 1,400 kc. as in (f) to compensate for any changes caused by the adjustment of the low frequency oscillator coil trimmer.

Radiotron Socket Voltages

The voltage values indicated from the Radiotron socket contacts to chassis on Figure 6 will assist in the location of causes for faulty operation. Each value as specified should hold within ± 20% when the receiver is normally operative at its rated supply voltage. Variations in excess of this limit will usually be indicative of trouble in the basic circuits. The voltages given are actual operating values and do not allow for inaccuracies which may be caused by the loading effect of a voltmeter's internal resistance. This resistance should be duly considered for all readings. The amount of circuit resistance shunting the meter during measurement will determine the accuracy to be obtained, the error increasing as the meter resistance becomes comparable to or less than the circuit resistance. For the majority of readings, a meter having an internal resistance of 1000 ohms per volt will be satisfactory when the range used for each reading is chosen as high as possible consistent with good readability.

Universal Transformer

The special transformer used on some receivers of this type is adaptable to several ranges of voltage as given under Rating C of Electrical Specifications. Its schematic and wiring is shown by Figure 5. Terminals are provided at the top of the transformer case for changing the primary connections to suit the voltage available. Note that a 110-volt tap is brought out separately for supplying a phonograph motor.

Wave-Trap Adjustment

With the receiver in operation using its normal antenna, tune station selector to the point at which the intermediate frequency interference is most intense. Then adjust the wave trap trimmer to the point which causes maximum suppression of the interference. This trimmer is adjusted to 460 kc. during manufacture, however, local conditions may require a readjustment, depending upon the interfering frequency.

Phonograph Mechanism

The phonograph motor is of the synchronous type and designed to be simple and foolproof. Under normal operating conditions, service difficulties should be negligible. Occasionally, however, certain adjustments may be required. These adjustments are illustrated and explained in Figure 8.

Magnetic Pickup

The pickup used in the phonograph unit is of an improved design. The horseshoe magnet is rigidly welded to the pole pieces and is irremovable. There is a centering spring attached to the armature to maintain proper adjustment and to provide a limiting effect on the movement of the armature. The frequency response is substantially uniform over a wide range. Service operations which may be necessary on the pickup are as follows:

Centering Armature

Refer to Figure 9 showing the pickup inner structure. The armature is shown in its proper relation to the magnet pole pieces, i. e., exactly centered. Whenever this centering adjustment has been disturbed it will be necessary to remove the pickup mechanism from the tone arm by removing the needle holding screw and the two mounting screws from the front of the tone arm, holding the pickup assembly to keep it from dropping. Unsolder the two leads from the lugs on the terminal board at the rear of the pickup. Insert a small rod or nail into the armature needle hole and replace the needle holding screw, tightening it to hold the rod securely. If the armature clamping screws A and B have not been disturbed, screw C should be loosened which will permit the armature to be moved from side to side, the rod acting as a lever to perform this operation. The proper adjustment is obtained when the armature is moved to the extreme position on each side (the movement being limited by the armature striking the pole pieces) and then brought to the mid position between these two extremes. Screw C should then be tightened. The armature position should then be central between the pole pieces and at right angles to them. With a little practice, the correct adjustment of the armature will be obtained. The air gap between the pole pieces and the armature should be kept free from dust, filings, and other foreign material which would obstruct the movement of the pickup armature.

Damping Block

The viscoloid damping block which is attached to the front end of the armature shank serves as a mechanical filter to eliminate undesirable resonances and to cause the frequency response to be uniform. Should it be necessary to replace this damping block, the pickup mechanism should be removed from the tone arm as explained above. Then unsolder the pickup coil leads from the two lugs on the pickup terminal board and remove the terminal board mounting screw and the terminal board. Then remove screw D and the damping block from the pickup assembly. Make sure that the shaft of the armature which contacts the viscoloid is clean. Then insert the new damping block so that it occupies the same position as that of the original block, and is in correct vertical alignment with the armature. The hole in the block is somewhat smaller than the diameter of the armature in order to permit a snug fit. With the damping block properly aligned on the armature, screw D with its washer should then be replaced. Heat should be applied to the armature (viscoloid side) so that the damping block will fuse at the point of contact and become rigidly attached to the armature. A special-tip soldering iron, constructed as shown in Figure 10, will be found very useful in performing this operation. The iron should be applied only long enough to slightly melt the block, causing a small bulge on both sides.

Replacing Coil

Whenever there is defective operation due to an open or shorted pickup coil, this coil should be replaced. Remove the pickup mechanism and terminal board as described above. Remove screws A and B and the magnet assembly. Remove the bakelite coil support (with coil attached) and insert the new coil support assembly in its place, after which replace the magnet assembly and center the armature as described above, then reassemble the remainder of the unit. Only rosin core solder should be used for soldering the coil leads and pickup leads to the pickup terminal board. This same type of solder should be used when necessary for soldering the centering spring to the armature.

Magnetizing

Loss of magnetization will not usually occur when the pickup has received normal care due to the fact that the magnet and pole pieces are one unit and the magnetic circuit remains closed at all times. When the pickup has been mishandled, subjected to a strong a.c. field, jolted, or dropped, there may be an appreciable loss of magnetic strength, in which case it will be necessary to remagnetize the entire structure. To do this, it will be necessary to first remove the pickup mechanism from the tone arm, and then remove the magnet assembly. Place the magnet assembly on the poles of a standard pickup magnetizer such as the **RCA Stock No. 9549 Pickup Magnetizer** and charging the magnet in accordance with the instructions accompanying the magnetizer. It is preferable to check the polarity of the pickup magnet and to remagnetize it so that the same polarity is maintained.

Mechanical Specifications

Height	39¼ inches
Width	23⅛ inches
Depth	14½ inches
Weight (Net)	65 pounds
Weight (Shipping)	85 pounds
Chassis Base Dimensions	13⅞ inches x 7¾ inches x 2½ inches

REPLACEMENT PARTS

Insist on genuine factory tested parts, which are readily identified and may be purchased from authorized dealers

Stock No.	Description	List Price
	RECEIVER ASSEMBLIES	
5237	**Bushing**—Variable tuning condenser mounting bushing assembly—Package of 3	80.45
11739	**Cable**—Two-conductor shielded cable—complete with four-contact female connector	.92
11758	**Cable**—Three-conductor shielded cable complete with four-contact male connector and grid contact cap—connects phonograph volume control to chassis cable	1.04
11350	**Cap**—Contact cap—Package of 5	.20
11463	**Capacitor**—Adjustable capacitor—(C18)	.40
11289	**Capacitor**—50 *MMfd.* (C27)	.36
5116	**Capacitor**—175 *MMfd.*—(C31)	.18
11290	**Capacitor**—400 *MMfd.*—(C2, C7, C13, C36)	.25
11407	**Capacitor**—4000 *MMfd.*—(C5)	.18
4868	**Capacitor**—.005 Mfd.—(C29, C34)	.20
4906	**Capacitor**—.017 Mfd.—(C35)	.25
11395	**Capacitor**—.01 Mfd.—(C24)	.18
4858	**Capacitor**—.01 Mfd.—(C32)	.25
11414	**Capacitor**—0.1 Mfd.—(C42)	.20
4859	**Capacitor**—0.1 Mfd.—(C14)	.28
4841	**Capacitor**—0.1 Mfd.—(C21)	.22
5170	**Capacitor**—0.25 Mfd.—(C8)	.25
11240	**Capacitor**—10 Mfd.—(C36)	1.08
11387	**Capacitor**—10 Mfd.—(C22)	.86
5212	**Capacitor**—18 Mfd.—(C33)	1.16
5218	**Clip**—Antenna terminal board with clip, insulating strip and rivets	.14
11600	**Coil**—Antenna coil—(L3, L4, L5, C4, R1)	1.78
11601	**Coil**—Detector coil—(L6, L7, L8, L9, C9, R3)	1.78
11602	**Coil**—Oscillator coil—(L10, L11, L12, L13, L14, L15, C15, C16)	2.15
6123	**Connector**—Four-contact male connector for cable, Stock No. 11758	.30
4153	**Connector**—Four-contact female connector for cable, Stock No. 11759	.48
11385	**Condenser**—Three gang variable tuning condenser—(C5, C6, C11, C12, C19, C20)	5.02
11675	**Dial**—Station selector dial	.78
11394	**Feet**—Chassis foot assembly—Package of 3	.70
11396	**Indicator**—Station selector indicator pointer	.25
5216	**Lamp**—Dial lamp—Package of 3	.70
11393	**Resistor**—Voltage divider resistor—comprising one 3,500 ohm and one 13,000 ohm sections—(R15, R20)	.74
11329	**Resistor**—Voltage divider resistor—comprising one 83 ohm, one 148 ohm, one 32 ohm sections—(R16, R17, R18)	.92
11369	**Resistor**—11 ohms—Flexible type—complete with contact cap—(R22)	.22
11374	**Resistor**—460 ohms—Carbon type—½ watt—(R24)—Package of 5	1.00
3066	**Resistor**—12,000 ohms—Carbon type—1 watt—(R5*)—Package of 3	1.10
8072	**Resistor**—33,000 ohms—Carbon type—½ watt—(R5*)—Package of 3	1.00
11322	**Resistor**—39,000 ohms—Carbon type—¼ watt—(R10)—Package of 5	1.00
11735	**Coil**—Stator assembly—comprising coil and laminations—105-125 volt, 25 cycle operation	3.08
11748	**Damper**—Motor damper assembly—comprising one damper, one damper plate, one screw, two rubber washers and one "C" washer	.20
11741	**Motor**—105-125 volts—60 cycle motor complete (M1)	11.10
11742	**Motor**—105-125 volts—50 cycle motor complete	11.10
11743	**Motor**—105-125 volts—25 cycle motor complete	11.60
11746	**Tripper**—Automatic brake tripper—located on rotor laminations	.16
11737	**Turntable**—Turntable assembly—complete with rotor laminations—60 cycle operation	4.80
11738	**Turntable**—Turntable assembly—complete with rotor laminations—50 cycle operation	4.80
11739	**Turntable**—Turntable assembly—complete with rotor laminations—25 cycle operation	5.05
4083	**Washer**—Leather washer—Package of 10	.20
4064	**Washer**—Metal washer—Package of 10	.26
	MOTOR BOARD ASSEMBLY	
11752	**Brake**—Automatic brake and switch—complete	2.50
11751	**Bushing**—Motor mounting bushing and spring assembly—comprising one bushing, one large washer, one cup washer, one spring, one small washer and two nuts	.74
4577	**Connector**—Two-contact male connector for power supply cable	.30
2947	**Leather**—Automatic brake friction leather—Package of 20	.50
11749	**Lever**—Brake mechanism actuating lever—forms to pivot shaft under base of pickup 878	.28
11754	**Lever**—Friction lever assembly—complete	.28
11753	**Plunger**—Automatic brake trip plunger	.18
3161	**Rest**—Pickup rubber rest—Package of 5	.40
11750	**Screw**—No. 4-40x5/32 in. cone pointed headless set screw for brake mechanism actuating lever, Stock No. 11749—Package of 10	.22
11756	**Spring**—Automatic stop mechanism trip lever spring—Package of 10	.22
11757	**Spring**—Automatic stop mechanism brake lever spring—Package of 10	.20
11755	**Switch**—Automatic brake switch (S6)	.72
11282	**Resistor**—56,000 ohms—Carbon type—1/10 watt—(R19*)—Package of 3	.75
11365	**Resistor**—82,000 ohms—Carbon type—½ watt—(R13)—Package of 5	1.00
5118	**Resistor**—100,000 ohms—Carbon type—½ watt—(R19*)—Package of 5	1.00
11325	**Resistor**—270,000 ohms—Carbon type—½ watt—(R13)—Package of 5	1.00
11372	**Resistor**—470,000 ohms—Carbon type—½ watt—(R14)—Package of 5	1.00
11397	**Resistor**—560,000 ohms—Carbon type—1/10 watt—(R2, R4)—Package of 5	.75
11636	**Resistor**—2.7 megohms—Carbon type—¼ watt—(R9)—Package of 5	1.00
11603	**Shield**—Antenna or detector coil shield	.26
11604	**Shield**—Oscillator coil shield	.24
11583	**Shield**—Rectifier Radiotron shield	.20
11590	**Shield**—Intermediate frequency transformer shield	.25
11199	**Socket**—Dial lamp socket	.14
4794	**Socket**—4-contact rectifier Radiotron socket	.15
11198	**Socket**—7-contact 6K7—6F7—or 6J7—Radiotron socket	.18
11196	**Socket**—6-contact 6A8 or 6F8 Radiotron socket	.18
11386	**Switch**—Range switch—(S1)	1.16
11392	**Switch**—Tone control and power switch assembly—(S2, S3)	1.14
11388	**Transformer**—First intermediate frequency transformer—(L16, L17, C23, C24)	1.90
11390	**Transformer**—Second intermediate frequency transformer—(L18, L19, C25, C26, C27, R7, R8)	3.02
11384	**Transformer**—Power transformer—105-125 volts—50-60 cycles—(T1)	4.65
11725	**Transformer**—Power transformer—105-125 volts—25-50 cycles	6.60
11727	**Transformer**—Power transformer—105-130, 140-160, 195-250 volts—40-60 cycles	6.60
11391	**Trap**—Wave trap—(L1, C1)	1.22
11197	**Volume Control**—(R11)	1.20
	PICKUP AND ARM ASSEMBLY	
11751	**Armature**—Pickup armature	.64
11730	**Cable**—Pickup cable	.14
11731	**Coil**—Pickup coil (L25)	.60
4543	**Damper**—Pickup damper block complete with damper plate	.10
11728	**Pickup and Arm Assembly**—Complete	8.15
3811	**Screw**—Needle holding screw—Package of 10	.46
	MOTOR ASSEMBLY	
10194	**Ball**—Steel ball bearing—Package of 20	.25
11740	**Base**—Motor base and bearing assembly	1.45
11745	**Cap**—Turntable spindle cap—Package of 5	.30
11731	**Coil**—Stator assembly—comprising coil and laminations—105-125 volt, 60 cycle operation	2.96
11734	**Coil**—Stator assembly—comprising coil and laminations—105-125 volt, 50 cycle operation	3.08
	REPRODUCER ASSEMBLIES	
11232	**Board**—Terminal board assembly with two lead wire clips	.18
11231	**Bolt**—Yoke and core assembly bolt and nut	.16
8060	**Bracket**—Output transformer mounting bracket	.14
11237	**Clamp**—Cone center suspension clamping nut and screw assembly—Package of 5	.25
11234	**Coil**—Field coil (L12)	2.00
11233	**Coil**—Hum neutralizing coil—(L21)	.30
11238	**Cone**—Reproducer cone—(L20)—Package of 5	3.85
5118	**Connector**—3-contact male connector for reproducer	.25
5119	**Connector**—3-contact female connector plug for reproducer cable	.25
9619	**Reproducer**—Complete	6.05
11253	**Transformer**—Output transformer—(T2)	1.76
11884	**Washer**—spring washer used to hold speaker field coil securely—Package of 4	.20
	MISCELLANEOUS ASSEMBLIES	
11762	**Box**—Used needle box	.25
11764	**Cable**—Two-conductor shielded cable approximately 28 in. long, connects phonograph volume control to compensator pack	.56
11760	**Compensator**—Phonograph compensator pack—Comprising one 470 ohm and one 1,000 ohm resistors, one .01 Mfd. one 0.1 Mfd. and one 1.0 Mfd. capacitors, and one 0.33H reactor—(R25, R26, C39, C40, C41, L24)	3.85
11376	**Escutcheon**—Station selector escutcheon and crystal	.70
11582	**Knob**—Range switch knob—Package of 5	.50
11347	**Knob**—Volume control, power switch or phonograph volume control knob—Package of 5	.75
11610	**Knob**—Station selector knob assembly—comprising one large and one small knob—Package of 5	1.00
11763	**Receptacle**—Needle receptacle	.38
11210	**Screw**—Chassis mounting screw assembly—Package of 4	.28
11761	**Screw**—Motor board screw and flashing washer assembly—Package of 10	.28
11349	**Spring**—Retaining spring for knobs, Stock No. 11347, No. 11582 and small knob in Stock No. 11610—Package of 5	.15
4982	**Spring**—Retaining spring for large knob in Stock No. 11610—Package of 10	.26
11695	**Volume Control**—Phonograph volume control (R17, 53)	1.60

The prices quoted above are subject to change without notice.

—NOTES—

(1) Beat notes or heterodyning (whistles) may be encountered in some instances on those receivers due to excessive antenna capacitance. This condition may be corrected by reducing the size of the antenna or by inserting a 150 mmfd. capacitor in series with the antenna lead. This may be accomplished in the receiver by removing the brown lead which connects from the antenna terminal to the wave trap inductance L-1 and inserting the condenser between these points. Interference in the form of "beats" from a local station may frequently be remedied by tuning the antenna wave trap to that station. The wave trap will tune up to 700 kc.

©John F. Rider, Publisher

RCA MFG. CO., INC.

MODELS T7-12, C7-14
Schematic
Chassis Wiring

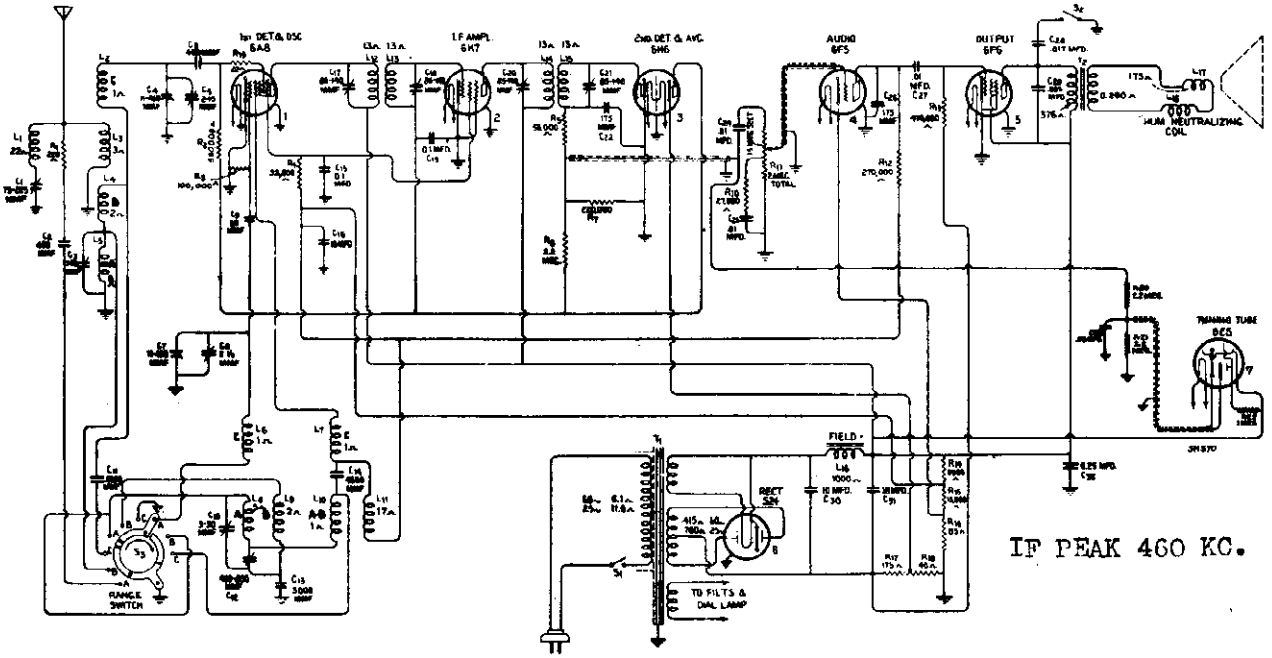

Figure 1—Schematic Circuit Diagram

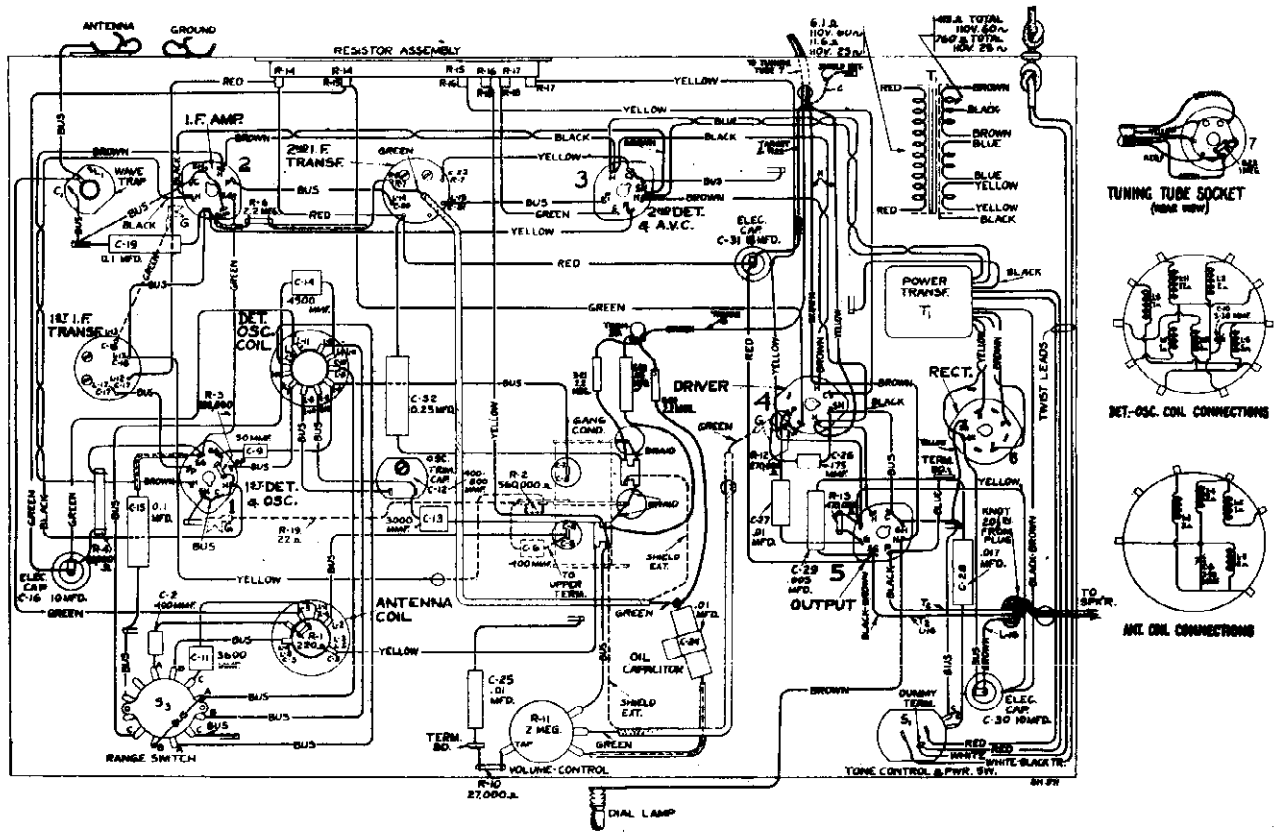

Figure 2—Chassis Wiring Diagram

©John F. Rider, Publisher

MODELS T7-12, C7-14
Data, Parts List

RCA MFG. CO., INC.

Seven-Tube, Three-Band, A-C, Superheterodyne Receivers
TECHNICAL INFORMATION

Electrical Specifications

RADIOTRON COMPLEMENT

(1) RCA-6A8.....First Detector—Oscillator
(2) RCA-6K7.....Intermediate Amplifier
(3) RCA-6H6.....Second Detector—A.V.C.
(4) RCA-6F5.....Audio Voltage Amplifier
(5) RCA-6F6.....Audio Power Amplifier
(6) RCA-5Z4.....Full Wave Rectifier
(7) RCA-6E5.....Tuning Indicator

FREQUENCY RANGES

Band A.....540— 1,625 kc.
Band B.....1,625— 5,700 kc.
Band C.....5,700—18,000 kc.

ALIGNMENT FREQUENCIES

Band A.....600 kc. (osc.), 1,400 kc. (osc., ant.)
Band B.....None required
Band C.....18,000 kc. (osc., ant.)

Intermediate Frequency.....**460 kc.**

POWER SUPPLY RATINGS

Rating A.....105—125 volts, 50—60 cycles, 90 watts
Rating B.....105—125 volts, 25—60 cycles, 90 watts
Rating C.....100—130/140—160/195—250 volts, 40—60 cycles, 90 watts

POWER OUTPUT

Undistorted.....2.0 watts
Maximum.....4.5 watts

LOUDSPEAKER

Type.....Electrodynamic
Voice Coil Impedance.....2.25 ohms at 400 cycles

Mechanical Specifications

Chassis Base Dimensions.....**12 inches x 7 inches x 2½ inches**
Tuning Drive Ratio.....10 to 1 and 50 to 1

MODEL T7-12

Height.....24⅞ inches
Width.....14⅞ inches
Depth.....11 inches
Weight (Net).....24 pounds
Weight (Shipping).....28 pounds

MODEL C7-14

Height.....40⅞ inches
Width.....26½ inches
Depth.....13⅜ inches
Weight (Net).....43 pounds
Weight (Shipping).....55½ pounds

General Description

These two models are similar to RCA Victor Models T6-1 and C6-2 respectively. The changes consist of (1) the addition of an RCA-6E5 Tuning Indicator, (2) an RCA-5Z4 all-metal rectifier used in place of the RCA-80, and (3) new cabinet design. All service data for Models T6-1 and C6-2 are directly applicable to these instruments except as follows:

Secondary resistance of Universal Transformer, 355 ohms total.

Tuning Tube Cable voltages: Yellow, 0 v.; Brown, 6.4 v. a-c; Red, 263 v.; and Green, 0 v.

The following parts listed for Models T6-1 and C6-2 are not required: Stock Nos. 4841 (C23), 11615, 11376, 11396, 11283, 5158, 11383, 11458, 11585, 11584, and 11230.

The parts listed below are required in addition to the remaining parts for Models T6-1 and C6-2 :

STOCK NO.	DESCRIPTION	LIST PRICE	STOCK NO.	DESCRIPTION	LIST PRICE
11996	Bracket—Tuning tube mounting bracket and clamp assembly	.22	11377	Screw—Chassis mounting screw assembly —Table model—Package of 4	.12
11888	Cable—Tuning tube cable, complete with socket	1.06	11199	Socket—Dial lamp socket	.14
4836	Capacitor—.05 Mfd. (C35)	.30	11381	Socket—Tuning tube socket and cover	.45
11894	Dial—Station selector dial scale	.65	11195	Socket—5-contact rectifier Radiotron socket	.15
11276	Escutcheon—Tuning tube escutcheon	.40	11198	Socket—7-contact Radiotron socket	.15
11893	Indicator—Station selector indicator pointer	.28	11196	Socket—8-contact Radiotron socket	.15
11455	Knob—Volume control or power switch knob—Package of 5	.48	11349	Spring—Retaining Spring for knob, Stock Nos. 11455 and 11609, and small knob in Stock No. 11610—Package of 5	.15
11609	Knob—Range switch knob—Package of 5	.52	4982	Spring—Retaining spring for large knob in Stock No. 11610—Package of 10	.26
11610	Knob—Station selector knob assembly, comprising one large and one small knob—Package of 5	1.00	11848	Transformer—Power transformer—105-125 volts—50-60 cycles (T1)	4.40
11382	Resistor—1 megohm—carbon type—1/10-watt (R22)—Package of 5	.75	11849	Transformer—Power transformer—105-125 volts—25-50 cycles	5.70
11626	Resistc —2.2 megohms — carbon type — ¼-watt (R20, R21)—Package of 5	1.00	11850	Transformer—Power transformer—100-130 —140-160—195-250 volts—40-60 cycles	8.00
11210	Screw—Chassis mounting screw assembly —Console model—Package of 4	.28	11886	Washer—Spring washer used to hold field coil securely—Package of 5	.20

The prices quoted above are subject to change without notice.

©John F. Rider, Publisher

RCA MFG. CO., INC.

MODELS T8-14, C8-15
Schematic, Socket
Trimmers, Speaker

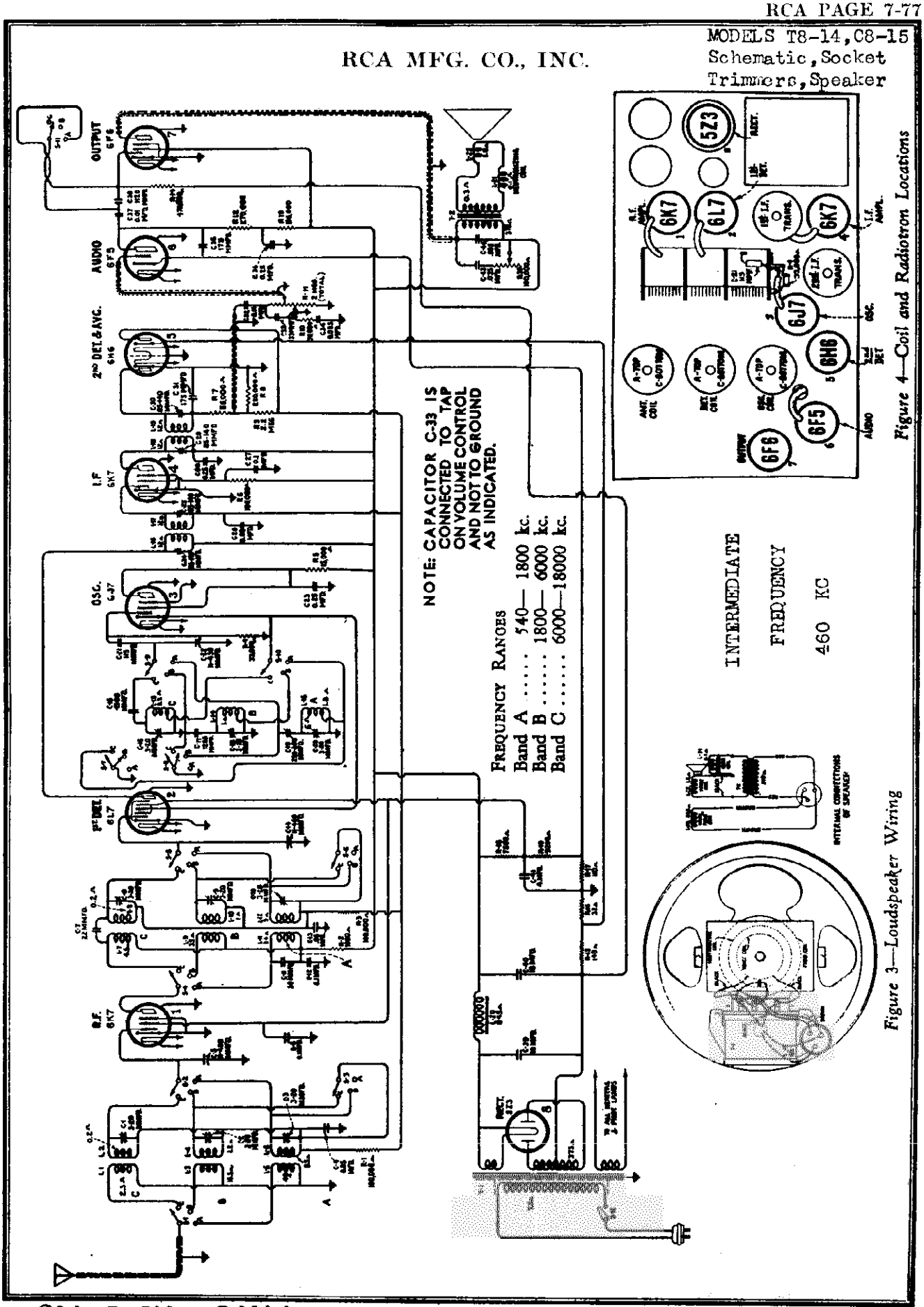

Figure 4—Coil and Radiotron Locations

Figure 3—Loudspeaker Wiring

©John F. Rider, Publisher

MODELS T8-14, C8-15
Chassis Wiring

RCA MFG. CO., INC.

MECHANICAL SPECIFICATIONS

	MODEL T 8-14	MODEL C 8-15
Height	19⅞ inches	39 inches
Width	16 inches	25¼ inches
Depth	11¾ inches	12¼ inches
Weight (Net)	35 pounds	52 pounds
Weight (Shipping)	41 pounds	68 pounds

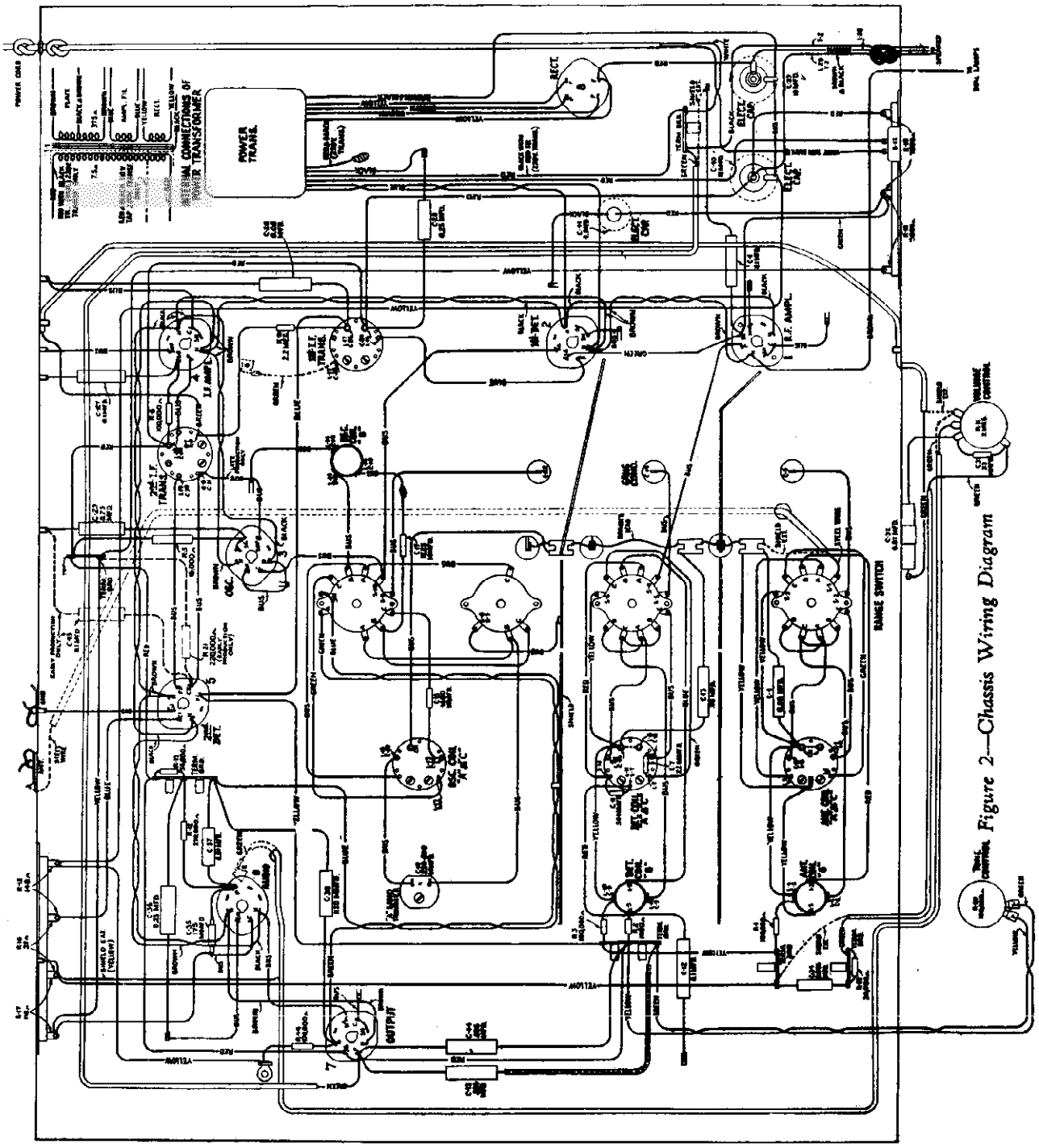

Figure 2—Chassis Wiring Diagram

©John F. Rider, Publisher

RCA MFG. CO., INC.

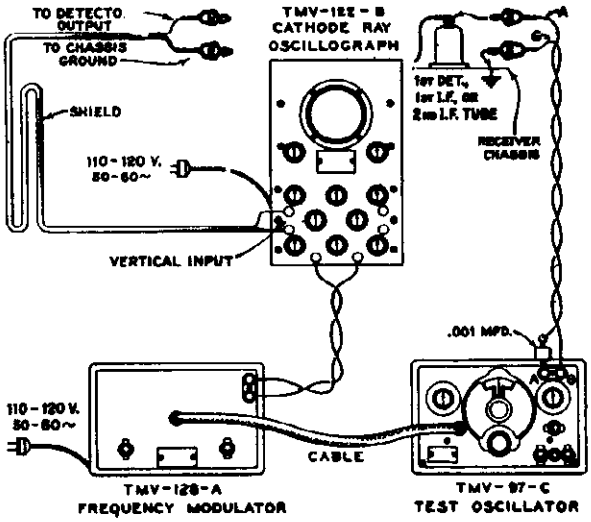

Figure 5—Alignment Apparatus Connections

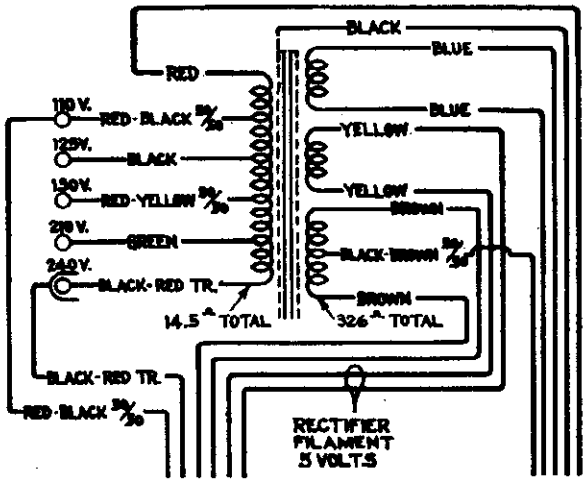

Figure 7—Universal Power Transformer Connections

VOLTAGE AND FREQUENCY

Rating A	105—125 volts, 50—60 cycles
Rating B	105—125 volts, 25—60 cycles
Rating C	100—130/140—160/195—250 volts, 40—60 cycles
Power Consumption	105 watts
Undistorted Output	2 watts
Maximum Output	4½ watts
Loudspeaker	C 8-15—12 inch, Electrodynamic T 8-14— 8 inch, Electrodynamic
Voice Coil Impedance	2¼ ohms at 400 cycles
Intermediate Frequency	460 kc.

ALIGNMENT FREQUENCIES

Band A	600 kc. (osc), 1720 kc. (osc, ant, det)
Band B	6132 kc. (osc, ant, det)
Band C	18000 kc. (osc, ant, det)

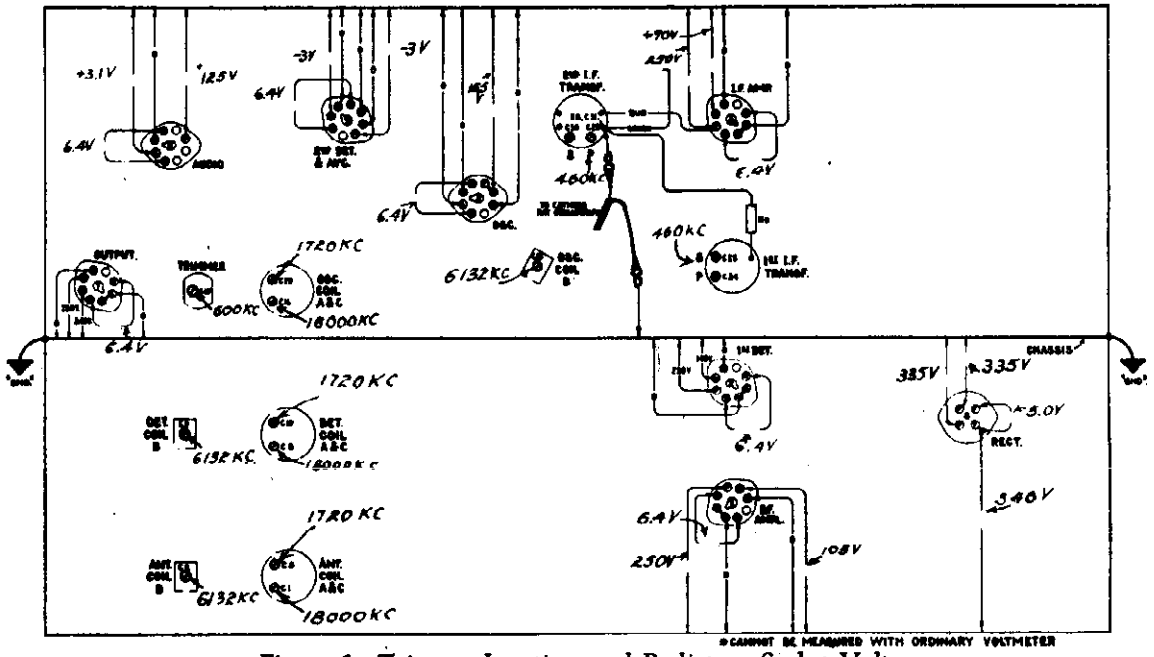

Figure 6—Trimmer Locations and Radiotron Socket Voltages
Measured at 115 volts A.C.—No Signal—Volume Control Maximum

©John F. Rider, Publisher

MODELS T8-14, C8-15
Circuit Data
Alignment

RCA MFG. CO., INC.

GENERAL FEATURES

These two instruments are alike in chassis construction and design. The table model employs an 8 inch loudspeaker while the console model uses a 12 inch unit. The following features are of outstanding interest:—

Metal Tubes

This receiver uses the new metal tubes which are much smaller in size than the corresponding glass types. The high frequency efficiency of these metal tubes is greater, because of the shorter lengths of leads, lesser interelectrode capacitance and the more complete shielding of the metallic envelopes. Their rugged construction prevents breakage and reduces microphonic tendencies. The bases and sockets of all types have a standardized arrangement of connecting prongs.

Dial Drive

An open face airplane type of dial is used. Each scale has a band of color adjacent to its graduations and three short strips of corresponding colors at the lower part of the dial for index purposes. An index pointer, which moves as the band switch is rotated, points to one of these colors to identify the band in use. The drive mechanism is variable, there being either a 10 to 1 or 10 to 1 ratio available between the tuning knob and condenser drive shaft.

Tuning Condenser

The variable tuning condenser is supported by a new design of shock-proof mount which has been developed by our engineers to prevent chassis vibration from producing audio frequency "howl"

Plug-in Loudspeaker

A readily detachable plug type of connection is used in the chassis to loudspeaker cable. This permits ready removal for service.

First Detector

This stage has unusually good high frequency mixing efficiency. The tube used, an RCA-6L7, is a new hexode type. The signal is supplied to the first control grid and the oscillator voltage is fed in on a second control grid, a screen grid separating the two. The arrangement of the grids prevents degenerative diffi-

CIRCUIT FEATURES

The circuit is based upon the Superheterodyne principle. The three ranges of tuning are covered by three sets of coils. A single r-f stage provides the desired selectivity and gain ahead of the hexode first detector tube. The oscillator stage operates separately from the first detector. A single stage i-f system is employed. Its basic frequency is 460 kc. Diode detection is performed by 1 double diode RCA-6H6 Radiotron. Automatic volume control is provided by this same tube. The audio system consists of two stages, one an RCA-6F5, and the output, an RCA-6F6. High voltages for plate and bias supplies are obtained from an RCA-5Z3 full wave rectifier through an efficient filter. The field of the loudspeaker acts as a reactor in the filter circuit. Further details of the circuit are as follows:—

Oscillator

The oscillator circuit has extreme stability of frequency and good uniformity of output over the tuning ranges. These qualities assure that the tuning of the receiver will not drift as the line voltage varies or the receiver heats. The action of the circuit is such that when the cathode emission tends to change with line voltage or because of other reasons, the variation of voltage drop in the plate and screen resistor restores the operating characteristics of the tube to normal and thus maintains constancy of the generated signal.

cutoff, particularly at the higher frequencies. The second grid is direct-connected to the cathode of the oscillator and has no d-c bias.

Compensated Volume Control

The variation in response of the human ear with different degrees of volume is compensated for by a resistor and condenser network in the manual volume control circuit. The volume control itself is an accurately tapered potentiometer which provides equal changes of sound intensity for the listener per degree of rotation.

Range Switch

The band change switch has several functions. It exchanges the antenna, detector and oscillator coils in order to select the range desired. At the same time, it shorts out the unused coils so as to eliminate their absorptive effects. It also varies the fidelity by shorting a coupling condenser in the audio system to provide the desired reproduction for short as well as long wave reception.

Tone Control

Provision is included for variable reduction of high frequencies. This consists of a resistor and condenser combination across the primary winding of the output transformer, the resistor being the variable element. As it is decreased, the high frequency response limit is lowered.

Power System

The power transformer has its primary winding capacitively shielded from its secondary windings to eliminate transfer of line disturbances into the receiver and to stop any tendency for the circuit to radiate into the line. Rectification is performed in the usual manner by a full wave tube.

Detection and A.V.C.

The modulated signal as obtained from the output of the i-f system is detected by an RCA-6H6 double diode tube. The audio frequency secured by this process is passed on to the a-f system for amplification and final reproduction. The d-c voltage which results from detection of the signal is used for automatic volume control. This voltage, which develops across resistor R-8, is applied as automatic control grid bias to the r-f, first detector and i-f tubes through suitable resistance-capacitance filter circuits. The second diode of the RCA-6H6 is used to supply residual bias for these controlled tubes under conditions of little or no signal. This diode, under such conditions, draws current, which flows through R-9 and R-8, thereby maintaining the desired minimum operating bias on such tubes. On application of signal energy above a certain low level, however, the auxiliary bias diode ceases to draw current and the a.v.c. diode takes over the biasing function.

SERVICE DATA

The various diagrams of this booklet contain such information as will be needed for servicing the receiver. The ratings of all resistors, capacitors, coils, etc., are indicated adjacent to the symbols signifying these parts on the diagrams. The coils, reactors and transformer windings are rated in terms of their d-c resistances only and where the value is less than one ohm, no rating is given. Identification titles such as R-1, L-2, C-1, etc., are provided for reference between the illustrations and replacement parts list.

Alignment Procedure

There are a total of fourteen adjustments necessary for obtaining proper alignment when such a process becomes necessary. Four of these are involved with the i-f system and the remainder are associated with the antenna, first detector and oscillator coils.

Correct performance of the receiver can only be obtained when the trimmer adjustments have been made by a skilled service man with the use of adequate and reliable test equipment. Such apparatus as may be required for this particular instrument is illustrated and described on a separate page of this booklet.

Two methods of alignment are applicable. One utilizes a Cathode-Ray Oscillograph as a means of output indication and the other follows former procedure where a glow type indicator or meter is used. The oscillographic method is much to be preferred, since greater accuracy is possible and the time required is lessened. There are no approximations necessary as with the meter or aural method, but each adjustment can be made with excellent precision. Both methods are hereinafter outlined so that alignment operations may be made according to the equipment available.

It is wise to determine the necessity for alignment as well as the direction of misalignment before making adjustments. The RCA Tuning Wand is an instrument designed particularly for such a purpose.

The Tuning Wand consists of a bakelite rod having a small brass cylinder at one end and a pair of finely divided iron at the other. It may be inserted into a coil while a signal of the normal resonant frequency is being supplied to such coil to obtain an indication of the tuning. Holes are provided at the top of each shield can for insertion of the Wand. The presence of either end of the Wand will cause a change in tuning which will be indicated at the receiver output as an increase or decrease in signal level. If there is a decrease of output when either end is inserted, the tuning is correct and will require no adjustment. However, should there be an increase of output due to the iron core and decrease with the brass cylinder, an increase in inductance or capacitance is indicated as necessary to bring the circuit into line. The trimmer involved should therefore be increased accordingly. If the brass cylinder end causes an increase in output while the iron end causes a decrease, reduction of the trimmer will be necessary to place the circuit in alignment. This is equivalent to decreasing the trimmer concerned. The following tabulation gives the various changes and the adjustments required:—

WAND	SIGNAL	TRIMMER
Brass	Decrease	None
Iron	Decrease	
Brass	Increase	Decrease
Iron	Decrease	
Brass	Decrease	Increase
Iron	Increase	

(1) CATHODE-RAY ALIGNMENT

Equipment

A standard source of the specified alignment frequencies is required. Such a source should consist of an RCA Full Range Oscillator, Stock No. 9991. Output indication should be by means of an RCA Stock No. 9545 Cathode-Ray Oscillograph. An RCA Stock No. 9558 Frequency Modulator will be needed to sweep the generated signal and synchronize it with the Oscillograph in order to make possible the visual representation of the resonant characteristic of the circuit being tuned on the cathode-ray fluorescent screen.

I-F Trimmer Adjustments

The four trimmers of the two i-f transformers are located as shown by Figure 6. Each must be aligned to a basic frequency of 460 kc. The last transformer must be aligned firstly and the first transformer aligned secondly. For such a process, it is necessary to feed the output of the Full Range Oscillator to the stages in their order of alignment, adjusting the trimmers of each transformer and observing the effect at the second detector output on the Cathode-Ray Oscillograph. The proper point of connection of the Oscillograph is with its vertical "high" input terminal attached to the junction of R-7, R-8 and R-9 as illustrated in Figure 6, and with the "0" or ground terminal to the chassis. The "Ext. Sync." terminals of the Oscillograph should be connected to the Frequency Modulator as shown by Figure 5. A .001 mfd. capacitor installed in series with the Oscillator "Ant." lead will prevent the voltages of the stage under alignment from becoming upset. The vertical "A" amplifier should be "On" for the ensuing adjustments and the gain control kept at its maximum position. For each adjustment, the Oscillator's output need be regulated so that the image obtained on the Oscillograph screen will be of sufficient size as to be accurately observable. Proceed further as follows:—

(a) Place the receiver, Oscillograph and test Oscillator in operation. Set the receiver range switch to Band "A" and tune the station selector to a point where no interference will be picked up, shorting the antenna and ground terminals if necessary. Set the Oscillograph horizontal "B" amplifier to "Tuning" and control its gain so that the luminescent spot sweeps a straight line trace completely across the screen. Place the tuning control to "Int." Adjust the intensity and focusing controls of the Oscillograph to produce the correct size and strength of the spot.

(b) Attach the output of the test Oscillator between the control grid cap of the RCA-6K7 i-f tube and chassis ground as shown typically by Figure 5. Turn the Oscillator to 460 kc. and set its modulation switch to "On". Regulate its output until the signal produces a wave pattern on the Oscillograph screen, adjusting the Oscillograph controls to give the desired number of cycles. Cause the image to stand still on the screen by manipulation of the frequency and synchronizing controls. Then carefully tune the two trimmers C-29 and C-30 of the second i-f transformer to produce maximum amplitude (vertical deflection) of the oscillographic image. Under this condition the transformer will be sharply resonated to 460 kc.

(c) The Frequency Modulator should then be placed in operation and interconnected with the Full Range Oscillator by means of the special shielded patch cord. Figure 5 shows the proper arrangement. Set the Frequency Modulator sweep range switch to its "Lo" position and turn the Oscillator modulation switch to "Off". Change the tuning control of the Oscillograph to "Ext." and place the range switch to its No. 2 position. Then carefully shift the tuning of the Oscillator so as to increase its frequency, until two distinct and similar waves appear on the Oscillograph screen and become exactly coincident at their highest points. These curves will be found to occur at an Oscillator setting of approximately 540 kc. They will be identical in shape but appearing in reversed positions. Adjust the frequency control of the Oscillograph in order to cause the waves to conform with the above requirements and to make them remain motionless on the screen. This will require a setting of approximately ½ clockwise rotation of the frequency control. The trimmers C-29 and C-30 should then be re-adjusted so that the two curves move together and become exactly coincident throughout their lengths, maintaining the maximum amplitude at which this condition can be brought about.

(d) Leaving the equipment connected and adjusted as in (c), change the Oscillator output to the control grid cap of the RCA-6L7 first detector tube. Then adjust the first i-f transformer trimmers C-24 and C-25 so that the forward and reverse waves appearing on the Oscillograph coincide throughout their lengths and have maximum amplitude. The shape of the composite wave obtained from this operation is a true representation of the overall tuning characteristic of the i-f system. Each trimmer of the entire group should then be checked to assure that it is in correct alignment as indicated by the degree of coincidence and relative amplitude of the image on the Oscillograph screen.

R-F Trimmer Adjustments

Locations of the various antenna, detector and oscillator coil trimmers are shown by Figure 6. The test Oscillator should be removed from connection with the i-f system and its output connected to the antenna-ground terminals of the receiver. No changes are to be made in the connections of the Oscillograph at the second detector. During the following adjustments, the Oscillator output should be regulated as often as is necessary to keep the oscillographic image as low as is practically observable. Adherence to such a procedure will obviate the broadness of tuning that would result from a.v.c. action on a stronger signal. Proceed with the adjustments as follows:—

Calibration

Set the receiver range switch to Band A and rotate the station selector until the tuning condenser plates are in full mesh (maximum capacitance). Then move the main dial pointer until it points exactly to the horizontal line at the low frequency end of the Band A scale.

Band A

(a) With the receiver range switch in its Band A position, tune the station selector until the dial pointer is at a reading of 1720 kc. Adjust the test Oscillator to 1720 kc. (modulation "On" and Frequency Modulator disconnected) and increase its output to produce a registration on the Oscillograph. Carefully align the oscillator, detector and antenna trimmers C-20, C-10 and C-3 respectively, so that each brings about maximum amplitude of output as shown by the wave on the Oscillograph. It will be necessary to have the timing control of the Oscillograph on "Ext." for this operation. After each trimmer has been peaked, the Oscillograph tuning control should be set to "Ext." and the Frequency Modulator placed into operation with its connections to the Oscillator and Oscillograph made in accordance with Figure 5. Turn the modulation switch of the Oscillator to "Off" and retune the Oscillator (increase frequency) until the forward and reverse waves show on the Oscillograph and become coincident at their highest points. Adjust the trimmers C-20, C-10 and C-3 again, setting each to the point which produces the best concordance and maximum amplitude of the wave images.

(b) Remove the Frequency Modulator cable from the Oscillator and shift the signal frequency to 600 kc. Place the modulation switch to "On". Tune the receiver to pick up this signal, disregarding the dial reading at which it is best received. Then insert the Frequency Modulator plug and retune the Oscillator (modulation "Off") until the two similar forward and reverse waves appear on the screen. For this adjustment, it is advisable to shift the Oscillator to its 200—400 kc. range and use the third harmonic of the generated signal in order to obtain the desired range of sweep. The oscillator series trimmer C-19 should then be adjusted to produce maximum amplitude of the images. No rocking will be necessary on the station selector inasmuch as the signal frequency is being "wobbled" by the Frequency Modulator to produce the same effect.

After completing this adjustment the trimmer C-19 should be re-aligned as in (a) to correct for any change brought about by the adjustment of C-19.

Band B

(a) Advance the receiver range switch to its Band B position and tune the station selector to a dial reading of 6132 kc. Set the test Oscillator to this same frequency (modulation "On" and Frequency Modulator disconnected) and increase its output until a suitable indication is apparent on the Oscillograph. The Oscillograph should be adjusted for "Int." tuning. Then adjust the oscillator trimmer C-18 to the point at which maximum amplitude of the image is obtained. Two positions will be found for this trimmer which gives such a maximum. The one of least capacitance is correct and should be used. This can be checked by tuning the image signal, which will be received at 6212 kc. on the dial if the adjustment of C-18 has been properly made. An increase in test Oscillator output may be necessary for this test, however, as frequency should not be changed from 6132 kc. nor any trimmer adjustments made on the receiver.

(b) Return the station selector to the 6132 kc. reading and align the detector and antenna coil trimmers, C-9 and C-2 respectively, for maximum (peak) output as shown by the Oscillograph. No further adjustments are to be made on this band.

Band C

(a) Turn the range switch of the receiver to its Band C position and tune the station selector until the dial pointer reads 18,000 kc. Set the test Oscillator to the same frequency (modulation "On" and Frequency Modulator disconnected) and regulate its output to the level required for convenience observation. Adjust the trimmer C-16 to the point producing maximum output as indicated on the Oscillograph. Check for the presence of the proper "image" signal by tuning the receiver to 17,080 kc. The 18,000 kc. signal of the Oscillator will be received at this point if the adjustment of C-16 has been properly made using the position of least capacitance which gives maximum receiver output. It may be necessary to increase the output of the Oscillator in order to get an indication of the "image". *No adjustments should be made during this check.*

(b) Return the receiver tuning to 18,000 kc., realign C-16 if necessary, and then adjust the detector and antenna trimmers, C-8 and C-1, for maximum signal output as evidenced by the oscillographic image. No further adjustments are to be made on this band.

(2) ALIGNMENT WITH OUTPUT METER

To align the receiver by means of an output indicator other than a Cathode-Ray Oscillograph will require the use of a standard test Oscillator such as that recommended above for the source of signals and means of indication for the output. The RCA Neon Output Indicator, Stock No. 4317 will be found very satisfactory for such use. It should be connected across the voice coil circuit of the loudspeaker or across the output transformer primary.

I-F Alignment

Connect the test Oscillator to the control grid cap of the i-f tube. Advance the volume control of the receiver to its full-on position. Tune the test Oscillator accurately to 460 kc. and align the trimmers C-29 and C-30 to give maximum receiver output. Regulate the Oscillator output during this adjustment so that the output indication is as small as can be conveniently observed. After completing the adjustments of these trimmers re-connect the Oscillator so that it will feed into the control grid circuit of the RCA-6L7 first detector. Then tune the first i-f transformer trimmers C-24 and C-25 for maximum receiver output.

R-F Alignment

After completing the i-f adjustments, it is advisable to correct the line-up of the circuits ahead of the first detector. The test Oscillator should be connected to the antenna-ground terminals of the receiver and the manual volume control kept at its maximum position. For each adjustment the Oscillator output should be maintained as low as possible in order to avoid broadness of tuning which would result from a.v.c. action on a stronger signal. **Band A** should be aligned by supplying a 1720 kc. signal to the receiver, tuning the station selector to a dial reading of 1720 and adjusting the trimmers C-20, C-10 and C-3 to produce maximum receiver output. The Oscillator should then be shifted to 600 kc. and the receiver tuned to resonate this signal, disregarding the reading at which it is best received. Trimmer C-19 must then be adjusted, simultaneously while rocking the station selector backward and forward through the signal until the maximum output results from the combined operations. C-20 should be rechecked to assure that its adjustment has not changed because of the trimming of C-19. **Band B** must be aligned at 6132 kc. by tuning the test Oscillator to such a frequency and turning the station selector to the same dial reading. Tune the trimmer C-18 to produce maximum receiver output, using the setting of least capacitance which causes same. The presence of the proper "image" may be checked by tuning the receiver to 6212 kc. at which point the 6132 kc. signal will be heard if the trimmer C-18 has been properly set to the position of least capacitance for maximum (peak) output. It may be necessary to increase the Oscillator output for this check. *No adjustments are to be made.* Return the station selector to the 6132 kc. dial marking and trim capacitors C-9 and C-2 for maximum receiver output. No other adjustments are necessary on Band B. Change the receiver so that it is operative and the dial reads 18,000 kc. on the "C" **Band**. Tune the test Oscillator to this same frequency. Then adjust the oscillator trimmer C-16 to produce maximum (peak) output. Two positions of this trimmer will be found which conform with this requirement. The one of least capacitance is correct. Check for the presence of "image" response at 17,080 kc. by shifting the receiver tuning. If it is received at such a point, the trimmer C-16 has been correctly adjusted to the right peak. *No adjustments are to be made during this check.* Tune the receiver back to the 18,000 kc. dial marking, re-adjust C-16 if necessary, and then tune the detector and antenna capacitors C-1 and C-8 for maximum receiver output. No further adjustments are necessary.

Radiotron Socket Voltages

The voltage values indicated from the Radiotron socket contacts to chassis on Figure 6 will serve to assist in the location of causes for faulty operation. Each value as specified should hold within ± 10% when the receiver is normally operative at its rated supply voltage. Variations in excess of this limit will usually be indicative of trouble in the basic circuits. The voltages given are actual operating values and do not allow for inaccuracies which may be caused by the loading effect of a voltmeter's internal resistance. This resistance should be duly considered for all readings. The amount of circuit resistance shunting the meter during measurement will determine the accuracy to be obtained, the error increasing as the meter resistance becomes comparable to or less than the circuit resistance. For the majority of readings, a meter having an internal resistance of 1000 ohms per volt will be satisfactory when the range used for each reading is chosen as high as possible consistent with good readability.

Universal Transformer

The transformer used on some models of these receivers is adaptable to several ranges of voltage as given under rating C of Electrical Specifications. Its schematic and wiring are shown by Figure 7. Terminals are provided at the top of the transformer case for changing the primary connections to suit the voltage being used.

©John F. Rider, Publisher

©John F. Rider, Publisher

PRICES ARE SUBJECT TO CHANGE WITHOUT NOTICE

REPLACEMENT PARTS

Stock No.	Description	List Price
	RECEIVER ASSEMBLIES	
4427	Bracket—Volume control or high frequency tone control mounting bracket	$0.18
5237	Bushing—Variable tuning condenser mounting bushing assembly—Package of 3	.43
11350	Cap—Contact cap—Package of 5	.20
11223	Capacitor—Adjustable capacitor (C19)	.46
11292	Capacitor—22 MMfd. (C7)	.24
11321	Capacitor—33 MMfd. (C33)	.26
11289	Capacitor—50 MMfd. (C11)	.26
11291	Capacitor—115 MMfd. (C21)	.24
5116	Capacitor—175 MMfd. (C35)	.18
4409	Capacitor—1120 MMfd. (C38)	.35
11288	Capacitor—1225 MMfd. (C17)	.30
11287	Capacitor—4500 MMfd. (C15)	.30
4868	Capacitor—0.005 Mfd. (C34, C44)	.20
4624	Capacitor—0.01 Mfd. (C32)	.54
4858	Capacitor—0.01 Mfd. (C37)	.25
5196	Capacitor—0.035 Mfd. (C43)	.18
4836	Capacitor—0.05 Mfd. (C4, C13, C26)	.30
4885	Capacitor—0.1 Mfd. (C6, C12, C27)	.28
4841	Capacitor—0.1 Mfd. (C45)	.22
5170	Capacitor—0.25 Mfd. (C23, C28, C36)	$0.25
11248	Capacitor—4 Mfd. (C41)	1.06
11240	Capacitor—10 Mfd. (C39)	1.08
5212	Capacitor—18 Mfd. (C40)	1.16
11272	Clamp—Antenna cable clamp—Located near antenna terminal	.10
4748	Clamp—Capacitor mounting clamp assembly—for stock $11248	.15
5215	Coil—Antenna coil (A and C Bands)—(L1, L2, L5, L6, C1, C3)	2.32
5245	Coil—Antenna coil (B Band)—(L3, L4, C2)	1.58
5216	Coil—Detector coil (A and C Bands)—(L7, L8, L11, L12, C8, C10)	2.34
5246	Coil—Detector coil (B Band)—L9, L10, C9)	1.62
5217	Coil—Oscillator coil (A and C Bands)—(L13, L15, C16, C20)	2.20
5247	Coil—Oscillator coil (B Band)—(L14, C18)	1.44
11214	Condenser—3-Gang variable tuning condenser (C5, C14, C22)	4.20
11238	Tone Control—High frequency tone control (R20)	.96
11237	Volume Control—(R11)	$1.20
4340	Lamp—Dial lamp—Package of 5	60
8041	Plate—R F or I F coil shield locking plate—Package of 2	.12
11244	Resistor—Voltage divider resistor, comprising one 7500 ohm and one 9200 ohm section—(R18, R19)	1.08
11245	Resistor—Voltage divider resistor, comprising one 148 ohm, one 32 ohm and one 110 ohm section—(R15, R16, R17)	62
5112	Resistor—1000 Ohm—Carbon Type—1/4 Watt—(R2)—Package of 5	1.00
5114	Resistor—15,000 Ohm—Carbon Type—1 Watt—(R5)	.22
11300	Resistor—33,000 Ohm—Carbon Type—1/10 Watt—(R4)—Package of 5	.75
11322	Resistor—39,000 Ohm—Carbon Type—1/4 Watt—(R10)—Package of 5	1.00
5029	Resistor—56,000 Ohm—Carbon Type—1/4 Watt—(R13)—Package of 5	1.00
3118	Resistor—100,000 Ohm—Carbon Type—1/4 Watt—(R1, R3, R6)—Package of 5	1.00
5158	Resistor—220,000 Ohm—Carbon Type—1/4 Watt—(R21)—Package of 5	1.00
11323	Resistor—270,000 Ohm—Carbon Type—1/4 Watt—(R12)—Package of 5	1.00
11172	Resistor—470,000 Ohm—Carbon Type—1/4 Watt—(R14)—Package of 5	1.00
11151	Resistor—2.2 Megohms—Carbon Type—1/4 Watt—(R9)—Package of 5	1.00
11273	Shield—Rectifier Radiotron shield	.25
11222	Socket—Dial lamp socket	.18
4794	Socket—4-contact rectifier Radiotron socket	.15
11313	Socket—5-contact Radiotron socket	.18
11198	Socket—7-contact Radiotron socket	.15
11236	Switch—Band switch (S1, S2, S3, S4, S5, S6, S7, S8, S9, S10, S11)	2.44
11133	Switch—Power switch—(S12)	.62
5238	Terminal—Antenna terminal clip assembly	.14
11216	Transformer—First intermediate frequency transformer (L16, L17, C24, C25)	2.15
11239	Transformer—Second intermediate frequency transformer—(L18, L19, C29, C30, C31, R7, R8)	2.72
11241	Transformer—Power transformer—105-125 volts—50-60 cycles (T1)	4.56
11242	Transformer—Power transformer—105-125 volts—25-60 cycles	6.52
11243	Transformer—Power transformer—100-130, 140-160, 195-250 volts—40-60 cycles	4.64
	DRIVE ASSEMBLIES	
4362	Arm—Band indicator operating arm	.28
10194	Ball—Steel ball—Used with winding shaft—Package of 20	.25
4422	Clutch—Tuning condenser drive clutch assembly—comprising drive shaft, balls, ring, spring and washers—assembled	1.00
11328	Dial—Dial scale	.68
11252	Drive—Variable tuning condenser drive assembly	1.88
11225	Indicator—Band indicator pointer	.18
4520	Indicator—Station selector indicator pointer	.18
11226	Link—Band indicator operating link and arm assembly—less pointer	.20
3993	Screw—No. 6-32-5/32" square set screw for band indicator operating arm—Package of 10	.25
4669	Screw—No. 8-32-5/32" set screw for variable condenser drive assembly—Package of 10	.25
4377	Spring—Band indicator operating arm spring—Package of 5	$0.25
4378	Stud—Band indicator operating arm stud and nut assembly—Package of 5	.25
11337	Escutcheon—Station selector escutcheon	.70
6614	Glass—Station selector dial glass	.30
11346	Knob—Station selector knob—Package of 5	.75
11347	Knob—Volume control, tone control, range switch or power switch knob—Package of 5	.75
11246	Foot—Chassis mounting foot and bracket assembly—Package of 2	.76
4678	Ring—Spring retaining ring for dial glass—Package of 5	.14
11210	Screw—Chassis mounting screw assembly—Package of 4	.28
11348	Screw—No. 8-32-7/16" headless cupped point set screw for knob, stock $11346—Package of 10	.32
11349	Spring—Retaining spring for knob, stock $11347—Package of 5	.15
	REPRODUCER ASSEMBLIES Table Model	
11232	Board—Terminal board with two lead wire clips	.18
11231	Bolt—Yoke and core assembly bolt and nut	.16
8060	Bracket—Output transformer mounting bracket	.14
11257	Clamp—Cone center suspension clamping nut and screw assembly—Package of 5	.25
11254	Coil—Field coil—(L20)	2.00
11233	Coil—Neutralizing coil (L21)	.30
11235	Cone—Reproducer cone—(L22)—Package of 5	3.50
5119	Connector—3-contact female connector for reproducer cable	.25
5118	Connector—3-contact male connector for reproducer	.25
9618	Reproducer—Complete	6.40
11253	Transformer—Output transformer—(T2)	1.56
11230	Washer—"Binders board" "C" washer—used to hold field coil securely—Package of 5	.18
	REPRODUCER ASSEMBLIES Console Model	
11232	Board—Terminal board assembly with two lead wire clips	.18
11231	Bolt—Yoke and core assembly bolt and nut	.16
8060	Bracket—Output transformer mounting bracket	.14
11257	Clamp—Cone center suspension clamping nut and screw assembly—Package of 5	.25
11254	Coil—Field coil—L20	2.00
11233	Coil—Hum neutralizing coil—L21	.30
11258	Cone—Reproducer cone—L22—Package of 5	3.85
5118	Connector—3-contact male connector for reproducer	.25
5119	Connector—3-contact female connector plug for reproducer cable	.25
9619	Reproducer—Complete	6.05
11253	Transformer—Output transformer—T2	1.56
11230	Washer—"Binders board" "C" washer used to hold field coil assembly	.18

MODELS T7-5,T8-14,T8-16
T10-1,T10-3
Speaker Data

RCA MFG. CO., INC.

SUPPLEMENT TO

RCA VICTOR MODELS

T 7-5, T 8-14, T 8-16, T 10-1, and T 10-3

SERVICE NOTES

On receiver Models T 7-5 and T 8-14, three different type speakers are used. They can be readily identified by the following numbers stamped on them: (1) RL 63-4, (2) 76365-1, and (3) 76365-3.

On receiver Models T 10-1 and T 10-3, two different type speakers are used: (1) RL 63-5 and (2) 76365-2.

On receiver Model T 8-16, two different type speakers are used: (1) RL 63-4 and (2) 76365-3.

The internal connections and replacement parts for speakers RL 63-4 and RL 63-5 are given in the Service Notes, while the schematic diagrams given below indicate the color code and wiring to the plug and connector for speakers: (1) 76365-1, (2) 76365-2, and (3) 76365-3. The replacement parts appear opposite the respective speakers.

REPLACEMENT PARTS

		Stock No.	Description	List Price
76365-1	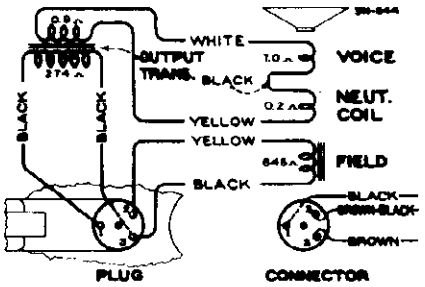		**76365-1**	
		11836	CONE—Reproducer cone	$1.75
		5118	CONNECTOR—3-contact male connector for reproducer	.25
		9634	REPRODUCER—Complete	6.40
		11837	TRANSFORMER—Output transformer (Field and hum coils not removable.)	1.56
76365-2	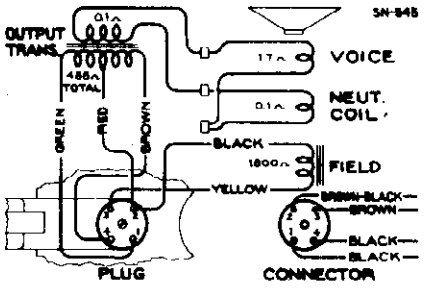		**76365-2**	
		11841	COIL—Field coil	2.15
		11842	COIL—Hum neutralizing coil	.30
		11838	CONE—Reproducer cone	2.00
		5039	CONNECTOR—4-contact male connector for reproducer	.25
		9636	REPRODUCER—Complete	6.60
		11839	SPRING—Reproducer center support casting clamping spring—Package of 2.	.30
		11840	TRANSFORMER—Output transformer	1.66
76365-3	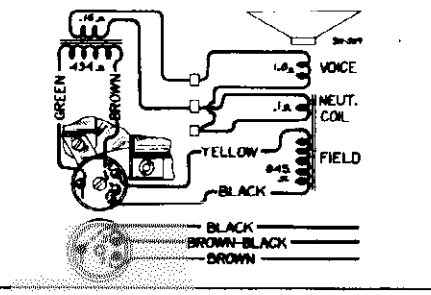		**76365-3**	
		11844	COIL—Field coil	2.00
		11842	COIL—Hum neutralizing coil	.30
		11838	CONE—Reproducer cone	2.00
		5118	CONNECTOR—3-contact male connector for reproducer	.25
		9635	REPRODUCER—Complete	6.40
		11839	SPRING—Reproducer center support casting clamping spring—Package of 2.	.30
		11843	TRANSFORMER—Output transformer	1.56

The prices quoted above are subject to change without notice.

©John F. Rider, Publisher

RCA MFG. CO., INC.

MODELS T8-16, C8-17
Schematic, Socket
Trimmers

Figure 4—Coil and Radiotron Locations

©John F. Rider, Publisher

MODELS T8-16,C8-17
Chassis Wiring

RCA MFG. CO., INC.

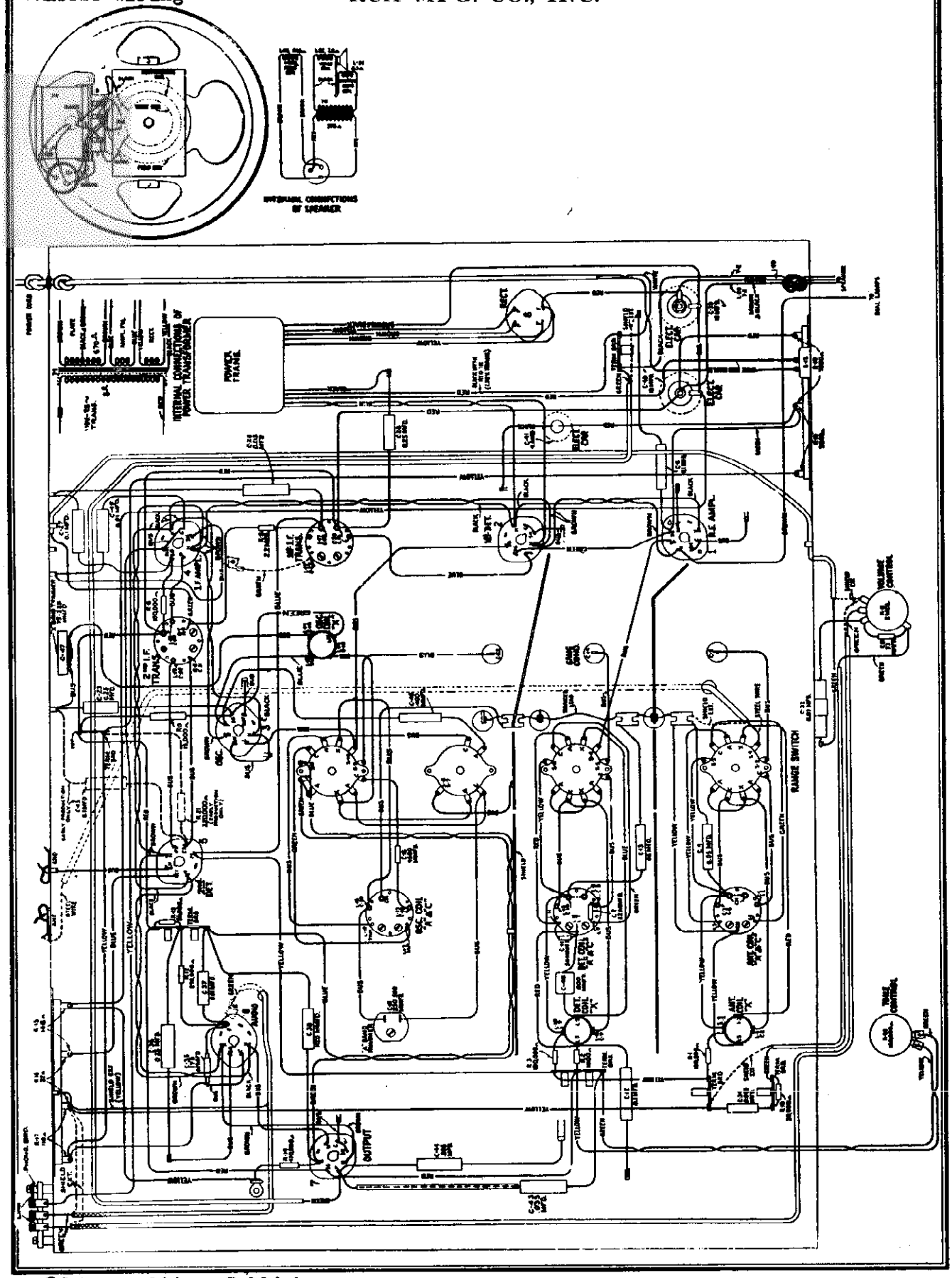

©John F. Rider, Publisher

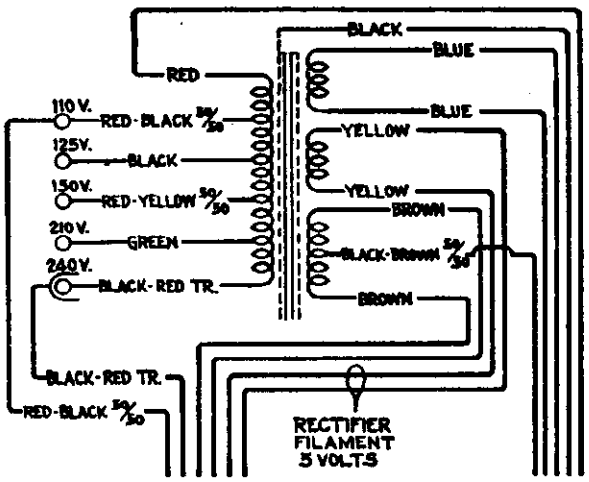

Figure 7—Universal Power Transformer Connections

Pri. Res.—10.3 Ohms, Total
Sec. Res.—383 Ohms, Total

Radiotron Socket Voltages

The voltage values indicated from the Radiotron socket contacts to chassis on Figure 6 will serve to assist in the location of causes for faulty operation. Each value as specified should hold within ± 20% when the receiver is normally operative at its rated supply voltage. Variations in excess of this limit will usually be indicative of trouble in the basic circuits. The voltages given are actual operating values and do not allow for inaccuracies which may be caused by the loading effect of a voltmeter's internal resistance. This resistance should be duly considered for all readings.

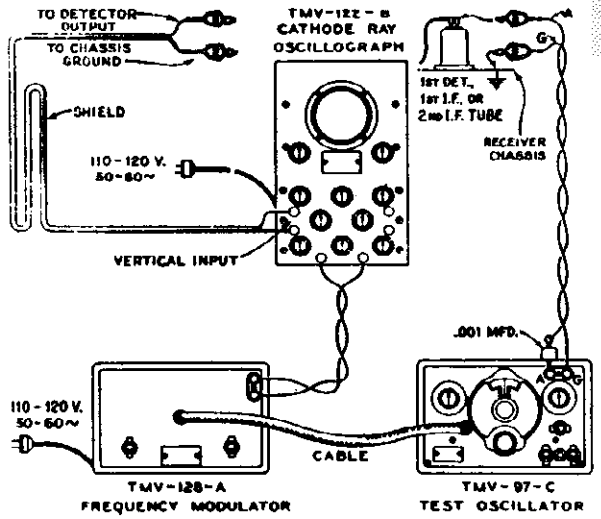

Figure 5—Alignment Apparatus Connections

The amount of circuit resistance shunting the meter during measurement will determine the accuracy to be obtained, the error increasing as the meter resistance becomes comparable to or less than the circuit resistance.

Universal Transformer

The transformer used on some models of these receivers is adaptable to several ranges of voltage as given under rating C of Electrical Specifications. Its schematic and wiring are shown by Figure 7. Terminals are provided at the top of the transformer case for changing the primary connections to suit the voltage being used.

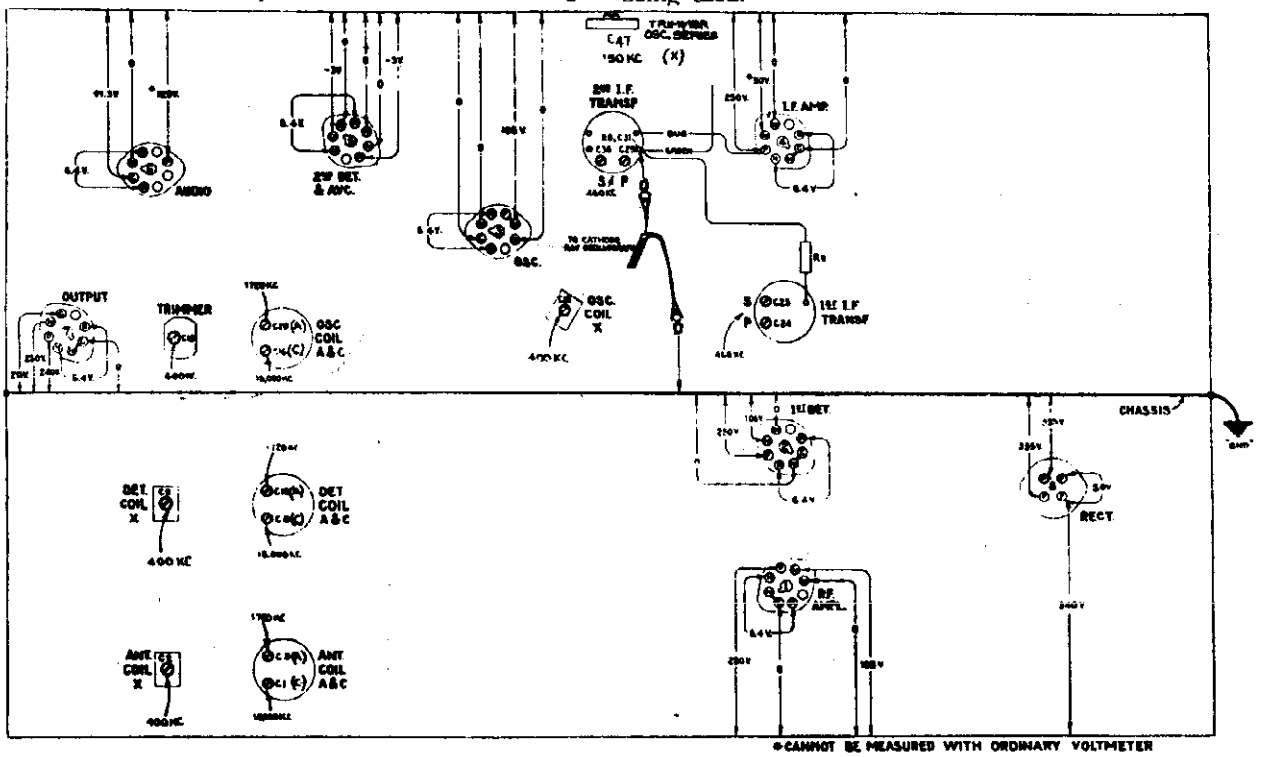

Figure 6—Trimmer Locations and Radiotron Socket Voltages
Measured at 115 volts A.C.—No Signal—Volume Control Maximum

©John F. Rider, Publisher

MODELS T8-16,C8-17
Alignment,Parts

RCA MFG. CO., INC.

(I) CATHODE-RAY ALIGNMENT

Equipment

A standard source of the specified alignment frequencies is required. Such a source should consist of an RCA Full Range Oscillator, Stock No. 9595. Output indication should be by means of an RCA Stock No. 9545 Cathode-Ray Oscillograph. An RCA Stock No. 9558 Frequency Modulator will be needed to sweep the generated signal and synchronize it with the Oscillograph in order to make possible the visual representation of the resonant characteristic of the circuit being tuned on the cathode-ray fluorescent screen.

I-F Trimmer Adjustments

The four trimmers of the two i-f transformers are located as shown by Figure 6. Each must be aligned to a base frequency of 460 kc. The last transformer must be aligned firstly and the first transformer aligned secondly. For such a process, it is necessary to feed the output of the Full Range Oscillator to the stage in their order of alignment, adjusting the trimmers of each transformer and observing the effect at the second detector output on the Cathode-Ray Oscillograph. The proper point of connection of the Oscillograph is with its vertical "high" input terminal attached to the junction of R-7, R-8 and R-9 as illustrated in Figure 6, and with the "0" or ground terminal to the chassis. The "Ext. Sync." terminals of the Oscillograph should be connected to the Frequency Modulator as shown by Figure 5. A .001 mfd. capacitor installed in series with the Oscillator "Ant." lead will prevent the voltages of the stage under alignment from becoming upset. The vertical "A" amplifier should be "On" for the aligning adjustments and the gain control kept at its maximum position. For each adjustment, the Oscillator output need be regulated so that the image obtained on the Oscillograph screen will be of sufficient size as to be accurately observable. Proceed further as follows:—

(a) Place the receiver, Oscillograph and test Oscillator in operation. Set the receiver range switch to Band "A" and tune the station selector to a point where no interference will be picked up, shorting the antenna and ground terminals if necessary. Set the Oscillograph horizontal "B" amplifier to "Timing" and control its gain so that the luminescent spot sweeps a straight line trace completely across the screen. Place the timing control to "Int." Adjust the intensity and focusing controls of the Oscillograph to produce the correct size and strength of the spot.

(b) Attach the output of the test Oscillator between the control grid cap of the RCA-6K7 i-f tube and chassis ground as shown typically by Figure 5. Tune the Oscillator to 460 kc. and set its modulation switch to "On". Regulate its output until the signal produces a wave pattern on the Oscillograph screen, adjusting the Oscillograph controls to give the desired number of cycles. Cause the image to stand still on the screen by manipulation of the frequency and synchronizing controls. Then carefully tune the two trimmers C-29 and C-30 of the second i-f transformer to produce maximum amplitude (vertical deflection) of the oscillographic image. Under this condition the transformer will be sharply resonated to 460 kc.

(c) The Frequency Modulator should then be placed in operation and interconnected with the Full Range Oscillator by means of the special shielded patch cord. Figure 5 shows the proper arrangement. Set the Frequency Modulator sweep range switch to its "Lo" position and turn the Oscillator modulation switch to "Off". Change the timing control of the Oscillograph to "Ext." and place the range switch to its No. 2 position. Then carefully shift the tuning of the Oscillator so as to increase its frequency, until two distinct and similar waves appear on the Oscillograph screen and become exactly coincident at their highest points. These curves will be found to occur at an Oscillator setting of *approximately* 340 kc. They will be identical in shape but appearing in reversed positions. Adjust the frequency control of the Oscillograph in order to cause the waves to conform with the above requirements and, to make them remain motionless on the screen. This will require a setting of approximately ½ clockwise rotation of the frequency control. The trimmers C-29 and C-30 should then be re-adjusted so that the two curves move together and become exactly coincident throughout their lengths, maintaining the maximum amplitude at which this condition can be brought about

(d) Leaving the equipment connected and adjusted as in (c), change the Oscillator output to the control grid cap of the RCA-6L7 first detector tube. Then adjust the first i-f transformer trimmers C-24 and C-25 so that the forward and reverse waves appearing on the Oscillograph coincide throughout their lengths and have maximum amplitude. The shape of the composite wave obtained from this operation is a true representation of the overall tuning characteristic of the i-f system. Each trimmer of the entire group should then be checked to assure that it is in correct alignment as indicated by the degree of coincidence and relative amplitude of the image on the Oscillograph screen.

R-F Trimmer Adjustments

Locations of the various antenna, detector and oscillator coil trimmers are shown by Figure 6. The test Oscillator should be removed from connection with the i-f system and its output connected to the antenna-ground terminals of the receiver. No changes are to be made in the connections of the Oscillograph at the second detector. During the following adjustments, the Oscillator output should be regulated as often as is necessary to keep the oscillographic image as low as is practically observable. Adherence to such a procedure will obviate the broadness of tuning that would result from a.v.c. action on a stronger signal. Proceed with the adjustments as follows:—

Calibration

Set the receiver range switch to Band A and rotate the station selector until the tuning condenser plates are in full mesh (maximum capacitance). Then move the main dial pointer until it points exactly to the horizontal line at the low frequency end of the Band A scale.

Band A

(a) With the receiver range switch in its Band A position, tune the station selector until the dial pointer is at a reading of 1720 kc. Adjust the test Oscillator to 1720 kc. (modulation "On" and Frequency Modulator disconnected) and increase its output to produce a registration on the Oscillograph. Carefully align the oscillator, detector and antenna trimmers C-20, C-10 and C-3 respectively, so that each brings about maximum amplitude of output as shown by the wave on the Oscillograph. It will be necessary to have the timing control of the Oscillograph on "Int." for this operation. After each trimmer has been peaked, the Oscillograph timing control should be set to "Ext." and the Frequency Modulator placed into operation with its connections to the Oscillator and Oscillograph made in accordance with Figure 5. Turn the modulation switch of the Oscillator to "Off" and retune the Oscillator (increase frequency) until the forward and reverse waves show on the Oscillograph and become coincident at their highest points. Adjust the trimmers C-20, C-10 and C-3 again, setting each to the point which produces the best coincidence and maximum amplitude of the wave images.

(b) Remove the Frequency Modulator cable from the Oscillator and shift the signal frequency to 600 kc. Place the modulation switch to "On". Tune the receiver to pick up this signal, disregarding the dial reading at which it is best received. Then insert the Frequency Modulator plug and retune the Oscillator (modulation "Off") until the two similar forward and reversed waves appear on the screen. For this adjustment, it is advisable to shift the Oscillator to its 200—400 kc. range and use the third harmonic of the generated signal in order to obtain the desired range of sweep. The oscillator series trimmer C-19 should then be adjusted to produce maximum amplitude of the images. No rocking will be necessary on the station selector inasmuch as the signal frequency is being "wobbled" by the Frequency Modulator to produce the same effect

After completing this adjustment the trimmer C-20 should be re-aligned as in (a) to correct for any change brought about by the adjustment of C-19.

Band X

(a) Disconnect the Frequency Modulator and tune the test Oscillator to a frequency of 400 kc. (Modulation "On"). Place the receiver range switch to its Band X position and tune the station selector until the dial pointer reads exactly 400 kc. Adjust the Oscillograph timing control to "Int." Then align each of the trimmers C-18, C-9 and C-2 to the point producing maximum output at the Oscillograph. Place the Frequency Modulator in operation and attach it to the test Oscillator by means of the shielded cable. Change the Oscillograph timing to "Ext." Increase the frequency of the Oscillator (Modulation "Off" until the two forward and reverse waves appear and become coincident at their highest point, *approximately* at 462 kc. These waves may be made to remain stationary on the screen by manipulation of the Oscillograph range switch (No. 2 position) and frequency control (mid-position). Re-adjust the three trimmers C-18, C-9 and C-2 to give maximum amplitude and complete coincidence of the waves.

(b) Change the test Oscillator so that it delivers a signal of 190 kc. with the Frequency Modulator disconnected. Tune this signal on the receiver, which should be set to the Band X setting, disregarding the dial reading at which the signal is best received. Then interconnect the Frequency Modulator with the Oscillator and retune the latter to the point at which the two similar waves appear on the screen. Adjust the trimmer C-17 for maximum amplitude of the wave images. Rocking of the tuning condenser will not be necessary for this operation as such is duplicated by the Frequency Modulator. Repeat the alignment of C-18 as in (a) to correct for any error brought about by the adjustment of C-17.

Band C

(a) Turn the range switch of the receiver to its Band C position and tune the station selector until the dial pointer reads 18,000 kc. Set the test Oscillator to the same frequency (modulation "On" and Frequency Modulator disconnected) and regulate its output to the level required for convenient observation. Adjust the trimmer C-16 to the point producing maximum output as indicated on the Oscillograph. Check for the presence of the proper "image" signal by tuning the receiver to 17,080 kc. The 18,080 kc. signal of the Oscillator will be received at this point if the adjustment of C-16 has been properly made using the position of least capacitance which gives maximum receiver output. It may be necessary to increase the output of the Oscillator in order to get an indication of the "image". *No adjustments should be made during this check.*

(b) Return the receiver tuning to 18,000 kc., realign C-16 if necessary, and then adjust the detector and antenna trimmers, C-8 and C-1, for maximum signal output as evidenced by the oscillographic image. No further adjustments are to be made on this band.

OUTPUT INDICATOR ALIGNMENT

I-F Alignment

Connect the test Oscillator to the control grid cap of the i-f tube. Advance the volume control of the receiver to its full-on position. Tune the test Oscillator accurately to 460 kc. and align the trimmers C-29 and C-30 to give maximum receiver output. Regulate the Oscillator output during this adjustment so that the output indication is as small as can be conveniently observed. After completing the adjustments of these trimmers, re-connect the Oscillator so that it will feed into the control grid circuit of the RCA-6L7 first detector. Then tune the first i-f transformer trimmers C-24 and C-25 for maximum receiver output.

R-F Alignment

After completing the i-f adjustments, it is advisable to connect the line-up of the circuits ahead of the first detector. The test Oscillator should be connected to the antenna-ground terminals of the receiver and the manual volume control kept at its maximum position. For each adjustment the Oscillator output should be maintained as low as possible in order to avoid broadness of tuning which would result from a.v.c. action on a stronger signal. Band A should be aligned by supplying a 1720 kc. signal to the receiver, tuning the station selector to a dial reading of 1720 and adjusting the trimmers C-20, C-10 and C-3 to produce maximum receiver output. The Oscillator should then be shifted to 600 kc. and the receiver tuned to resonate this signal, disregarding the reading at which it is best received. Trimmer C-19 must then be adjusted, simultaneously while rocking the station selector backward and forward through the signal until the maximum output results from the combined operations. C-20 should be rechecked to assure that its adjustment has not changed because of the trimming of C-19. Band X must be aligned at 400 kc. and 150 kc. Tune the test Oscillator to 400 kc. and turn the receiver dial to the same reading. Adjust trimmers C-18, C-9 and C-2 for maximum (peak) receiver output. Then shift the Oscillator to 150 kc. and tune the receiver to pick up this signal, disregarding the dial reading at which it is best received. Adjust trimmer C-47, simultaneously rocking the tuning condenser backward and forward through the signal, until maximum receiver output results from the combined operations. Repeat the alignment of C-18 as above to correct for any change which may have been caused by the adjustment of C-47. Change the receiver so that it is operative and the dial reads 18,000 kc. on the "C" Band. Tune the test Oscillator to this same frequency. Then adjust the oscillator trimmer C-16 to produce maximum (peak) output. Two positions of this trimmer will be found which conform with this requirement. The one of least capacitance is correct. Check for the presence of "image" response at 17,080 kc. by shifting the receiver tuning. If it is received at such a point, the trimmer C-16 has been correctly adjusted to the right peak. *No adjustments are to be made during this check.* Tune the receiver back to the 18,000 kc. dial marking, re-adjust C-16 if necessary, and then tune the detector and antenna capacitors C-1 and C-8 for maximum receiver output. No further adjustments are necessary.

Stock No.	Description	List Price
	RECEIVER ASSEMBLIES	
4427	Bracket—Volume control or high frequency tone control mounting bracket	$0.18
7237	Bushing—Variable tuning condenser mounting bushing assembly—Package of 5	.45
11170	Cap—Contact cap—Package of 7	.20
11123	Capacitor—Adjustable capacitor (C19)	.46
11156	Capacitor—Adjustable capacitor (C47)	.46
11292	Capacitor—22 MMfd. (C7)	.24
11121	Capacitor—55 MMfd. (C13)	.26
11289	Capacitor—90 MMfd. (C11)	.26
11291	Capacitor—119 MMfd. (C12)	.24
5116	Capacitor—175 MMfd. (C31)	.18
11290	Capacitor—400 MMfd. (C48)	.27
11269	Capacitor—800 MMfd. (C46)	.30
11409	Capacitor—1120 MMfd. (C38)	.35
11287	Capacitor—4500 MMfd. (C15)	.30
4868	Capacitor—0.001 Mfd. (C34)	.20
4938	Capacitor—0.005 Mfd. (C-44)	.20
4934	Capacitor—0.01 Mfd. (C-45)	.16
4935	Capacitor—0.02 Mfd. (C-43)	.27
4936	Capacitor—0.05 Mfd. (C-42)	.18
4836	Capacitor—0.05 Mfd. (C4, C13, C36)	$0.30
4865	Capacitor—0.1 Mfd. (C6, C12, C27)	.28
5170	Capacitor—0.25 Mfd. (C23, C28, C36)	.25
11248	Capacitor—4 Mfd. (C41)	1.06
11240	Capacitor—10 Mfd. (C39)	1.08
7212	Capacitor—18 Mfd. (C40)	1.16
11272	Clamp—Antenna cable clamp—Located near antenna terminal	.10
4748	Clamp—Capacitor mounting clamp assembly—for stock #11248	.15
9215	Coil—Antenna coil (A and C Bands)—(L1, L2, L7, L8, C1, C8)	2.32
11325	Coil—Antenna coil (X Band)—(L3, L4, C2)	1.56
9216	Coil—Detector coil (A and C Bands)—(L7, L8, L11, L13, C8, C10)	2.34
11326	Coil—Detector coil (X Band)—(L9, L10, C9)	1.60
9217	Coil—Oscillator coil (A and C Bands)—(L15, L17, C16, C36)	2.30
11327	Coil—Oscillator coil (X Band)—(L14, C18)	1.44
11214	Condenser—3-Gang variable tuning condenser (C7, C14, C23)	4.20
4836	Capacitor—0.05 Mfd. (C4, C13, C36)	$0.30
4865	Capacitor—0.1 Mfd. (C6, C12, C27)	.28
5170	Capacitor—0.25 Mfd. (C23, C28, C36)	.25
11248	Capacitor—4 Mfd. (C41)	1.06
11240	Capacitor—10 Mfd. (C39)	1.08
7212	Capacitor—18 Mfd. (C40)	1.16
11272	Clamp—Antenna cable clamp—Located near antenna terminal	.10
4748	Clamp—Capacitor mounting clamp assembly—for stock #11248	.15
9215	Coil—Antenna coil (A and C Bands)—(L1, L2, L7, L8, C1, C8)	2.32
11325	Coil—Antenna coil (X Band)—(L3, L4, C2)	1.56
9216	Coil—Detector coil (A and C Bands)—(L7, L8, L11, L13, C8, C10)	2.34
11326	Coil—Detector coil (X Band)—(L9, L10, C9)	1.60
9217	Coil—Oscillator coil (A and C Bands)—(L15, L17, C16, C36)	2.30
11327	Coil—Oscillator coil (X Band)—(L14, C18)	1.44
11214	Condenser—3-Gang variable tuning condenser (C7, C14, C23)	4.20
11238	Tone Control—High frequency tone control (R20)	$0.95
11237	Volume Control—(R11)	1.20
4140	Lamp—Dial lamp—(R15, R16, R17)	.60
8041	Plate—R.F. or I.F. coil shield locking plate—Package of 2	.12
11244	Resistor—Voltage divider resistor, comprising one 7100 ohm and one 9200 ohm section—(R18, R19)	1.08
11247	Resistor—Voltage divider resistor, comprising one 148 ohm, one 12 ohm and one 110 ohm section—(R15, R16, R17)	.62
7112	Resistor—1000 Ohm—Carbon Type—½ Watt—(R3)—Package of 5	1.00
9114	Resistor—15,000 Ohm—Carbon Type—½ Watt—(R5)—Package of 5	1.00
11300	Resistor—33,000 Ohm—Carbon Type—½ Watt—(R4)—Package of 5	.22
11322	Resistor—39,000 Ohm—Carbon Type—½ Watt—(R10)—Package of 5	.75
9029	Resistor—56,000 Ohm—Carbon Type—½ Watt—(R13)—Package of 5	1.00
5118	Resistor—100,000 Ohm—Carbon Type—½ Watt—(R1, R3, R6)—Package of 5	1.00
11323	Resistor—270,000 Ohm—Carbon Type—½ Watt—(R12)—Package of 5	1.00
11172	Resistor—470,000 Ohm—Carbon Type—½ Watt—(R14)—Package of 5	1.00
11151	Resistor—2.2 Megohms—Carbon Type—½ Watt—(R9)—Package of 5	1.00
11273	Shield—Rectifier Radiotron shield	.25
11222	Socket—Dial lamp socket	.18
4794	Socket—4-contact rectifier Radiotron socket	.17
11313	Socket—5-contact Radiotron socket	.18
11196	Socket—7-contact Radiotron socket	.17
11216	Switch—Band switch (S1, S2, S3, S4, S5, S6, S7, S8, S9, S10, S11)	2.44
11133	Switch—Power switch—(S12)	.62
7238	Terminal—Antenna terminal clip assembly	.14
11216	Transformer—First intermediate frequency transformer (L16, L17, C24, C25)	2.19
11239	Transformer—Second intermediate frequency transformer—(L18, L19, C29, C30, C31, R7, R8)	2.72
11241	Transformer—Power transformer—105-125 volts—50-60 cycles (T1)	4.56
11242	Transformer—Power transformer—105-125 volts—25-60 cycles	6.52
11243	Transformer—Power transformer—100-130, 140-160, 195-250 volts—40-60 cycles	4.44
	DRIVE ASSEMBLIES	
4342	Arm—Band indicator operating arm	.28
10104	Ball—Steel ball—Used with winding shafts—Package of 20	.25
4432	Clutch—Tuning condenser drive clutch ass'y—comprising drive shaft, balls, ring, spring and washers—assembled	1.00
11362	Dial—Dial scale	.60
11272	Drive—Variable tuning condenser drive assembly	1.88
4130	Indicator—Station selector indicator pointer	.18
11236	Indicator—Band indicator pointer assembly comprising indicator pointer, arm, ball and stud	.20
3993	Screw—No. 6-32-7/32" square set screw for band indicator operating arm—Package of 10	.27
4669	Screw—No. 8-32-1/32" set screw for variable condenser drive assembly—Package of 10	.25

Stock No.	Description	List Price
4377	Spring—Band indicator operating arm spring—Package of 5	$0.25
4378	Stud—Band indicator operating arm stud and nut assembly—Package of 5	.25
	MISCELLANEOUS ASSEMBLIES	
11317	Escutcheon—Station selector escutcheon	.70
6614	Glass—Station selector dial glass	.30
11246	Knob—Station selector knob—Package of 5	.75
11347	Knob—Volume control, tone control, range switch or power switch knob—Package of 5	.75
11246	Post—Chassis mounting post and bracket assembly—Package of 2	.70
4678	Ring—Spring retaining ring for dial glass—Package of 5	.14
11210	Screw—Chassis mounting screw assembly—Package of 5	.38
11348	Screw—No. 8-32-7/16" headless cupped point set screw for knob, stock #11346—Package of 10	.32
11349	Spring—Retaining spring for knob, stock #11347—Package of 5	.25
	REPRODUCER ASSEMBLIES Table Model	
11232	Board—Terminal board with two lead wire clips	.18
11231	Bolt—Yoke and core assembly bolt and nut	.10
8060	Bracket—Output transformer mounting bracket	.14
11277	Clamp—Cone center suspension clamping nut and screw assembly—Package of 5	.25
11274	Coil—Field coil—(L20)	2.00
11233	Coil—Hum neutralizing coil (L21)	.30
11235	Cone—Reproducer cone—(L23)—Package of 5	3.50
5119	Connector—3-contact female connector for reproducer cable	.25
5118	Connector—3-contact male connector for reproducer	.25
9618	Reproducer—Complete	6.40
11273	Transformer—Output transformer—(T2)	1.56
11230	Washer—"Bindex board" "C" washer used to hold field coil securely—Package of 5	.18
	REPRODUCER ASSEMBLIES Console Model	
11232	Board—Terminal board assembly with two lead wire clips	.18
11231	Bolt—Yoke and core assembly bolt and nut	.10
8060	Bracket—Output transformer mounting bracket	.14
11277	Clamp—Cone center suspension clamping nut and screw assembly—Package of 5	.25
11274	Coil—Field coil—L20	2.00
11233	Coil—Hum neutralizing coil—L21	.30
11276	Cone—Reproducer cone—L23—Package of 5	3.85
5118	Connector—3-contact male connector for reproducer	.25
5119	Connector—3-contact female connector plug for reproducer cable	.25
9619	Reproducer—Complete	6.80
11273	Transformer—Output transformer—T2	1.56
11230	Washer—"Bindex board" "C" washer used to hold field coil assembly	.18

©John F. Rider, Publisher

©John F. Rider, Publisher

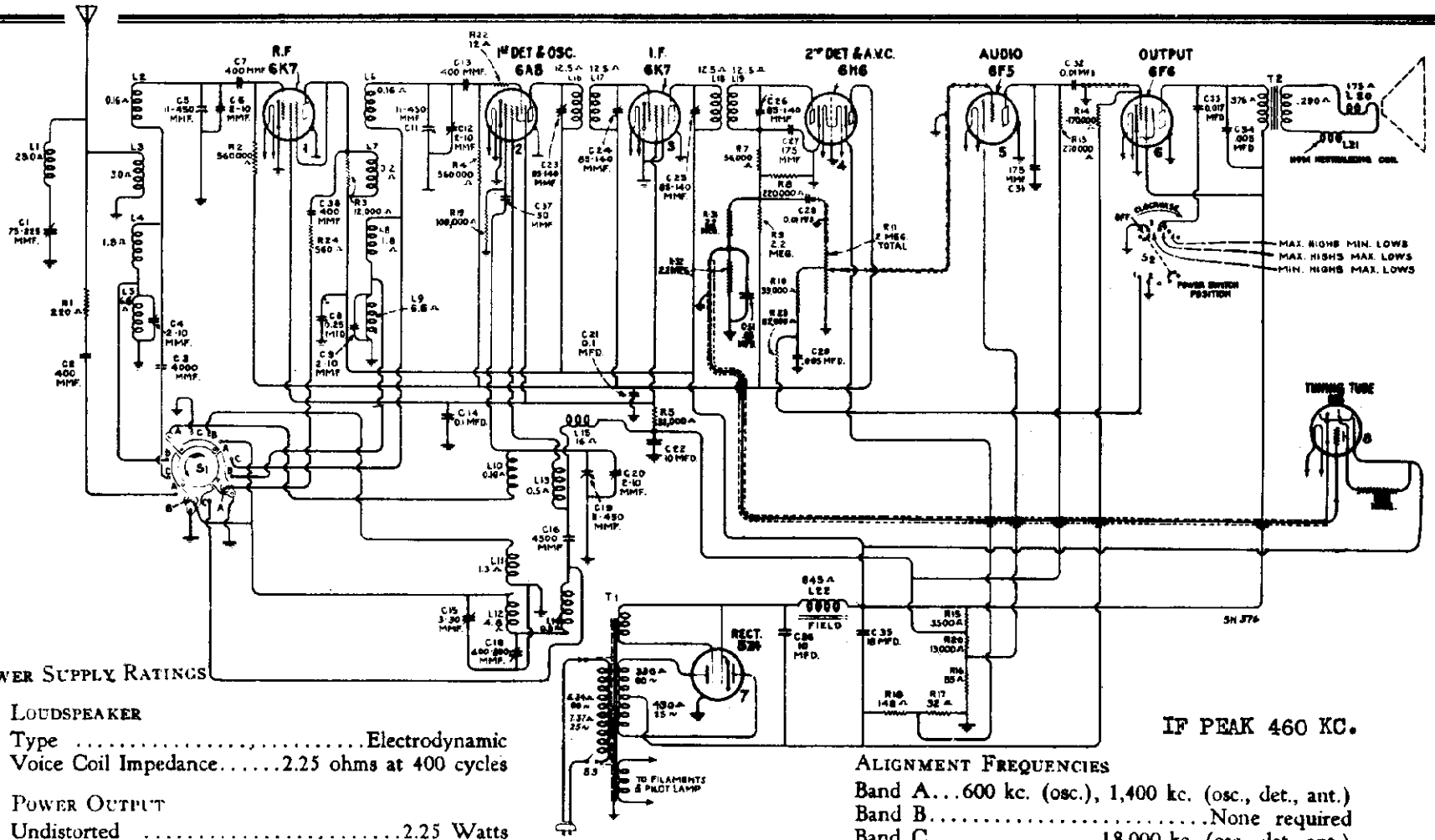

Power Supply Ratings

Loudspeaker

Type ..... Electrodynamic
Voice Coil Impedance..... 2.25 ohms at 400 cycles

Power Output

Undistorted ..... 2.25 Watts
Maximum ..... 5.0 Watts

Frequency Ranges

Band A	540- 1,625 kc.
Band B	1,625- 5,700 kc.
Band C	5,700-18,000 kc.

Alignment Frequencies

Band A...600 kc. (osc.), 1,400 kc. (osc., det., ant.)
Band B.....None required
Band C.....18,000 kc. (osc., det., ant.)

These three models are similar to RCA Victor Models T7-5 and C7-6, except for the addition of an RCA-6E5 Tuning Indicator; and an RCA-5Z4 All-Metal Rectifier used in place of the RCA-80. An 8-inch dynamic speaker is used in the Table Model (T8-18), while the two Console Models (C8-19 and C8-20) each use a 12-inch dynamic speaker. The two Console Models differ only in cabinet design.

Service Data

All information contained in the Service Notes for RCA Victor Models T7-5 and C7-6 is directly applicable to these instruments except the Schematic Diagram, Wiring Diagram, and Replacement Parts. Other differences are as follows:

Secondary resistance of universal transformer, 265 ohms total.

Tuning tube cable voltages:

Yellow	Brown	Red	Green
0 v.	6.3 v. a-c	258 v.	0 v.

MODELS T8-18,C8-19,C8-20
Chassis Wiring

RCA MFG. CO., INC.

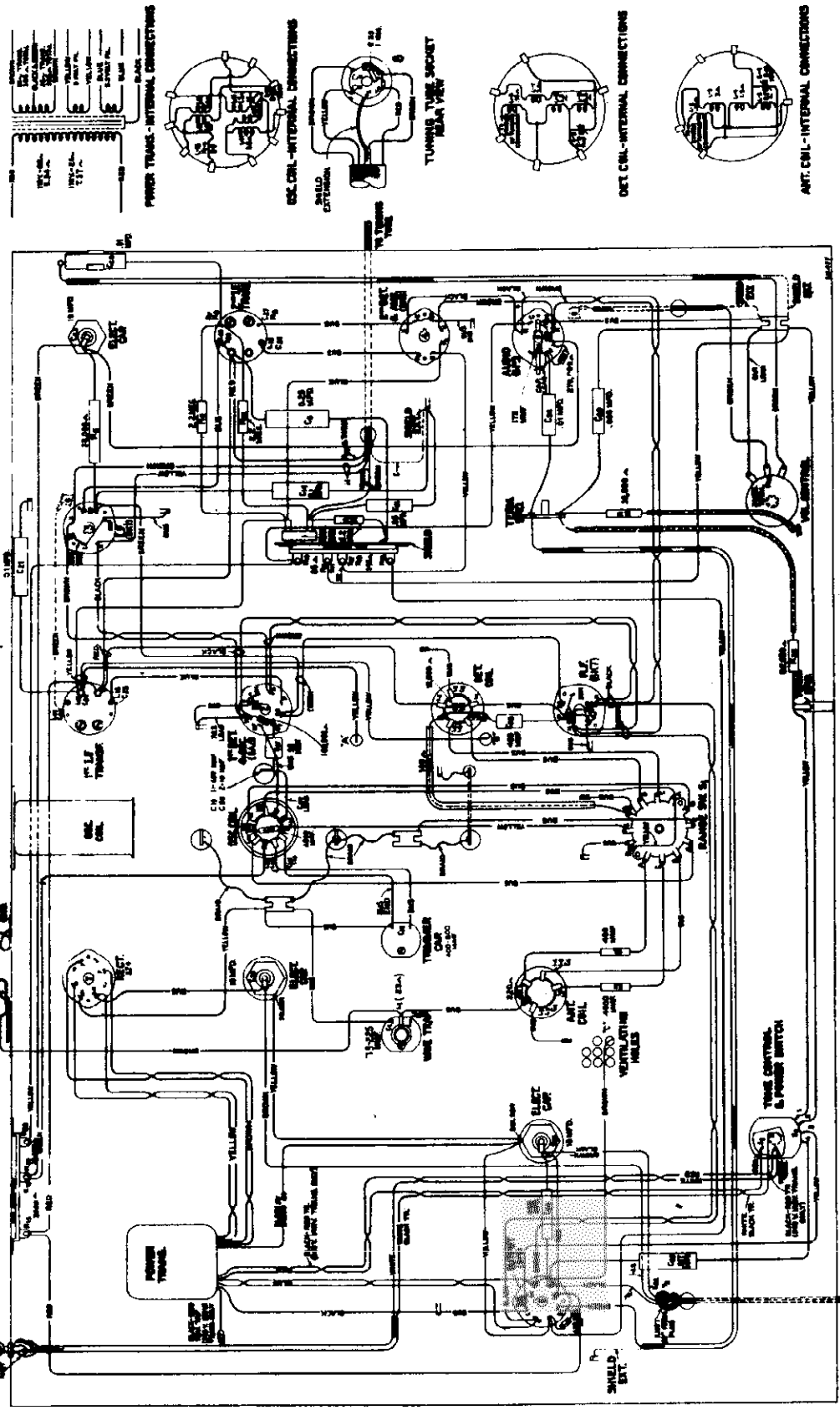

POWER TRANSFORMER

Rating A STOCK #11803.....105-125 Volts, 50-60 Cycles, 100 Watts
Rating B STOCK #11804.....105-125 Volts, 25-60 Cycles, 105 Watts
Rating C STOCK #11805.....100-130/140-160/195-250 Volts, 40-60 Cycles, 100 Watts

For Alignment, Parts List, etc., see Models T7-5, C7-6.

©John F. Rider, Publisher

RCA MFG. CO., INC.

MODEL D8-28
Schematic, Socket
Trimmers

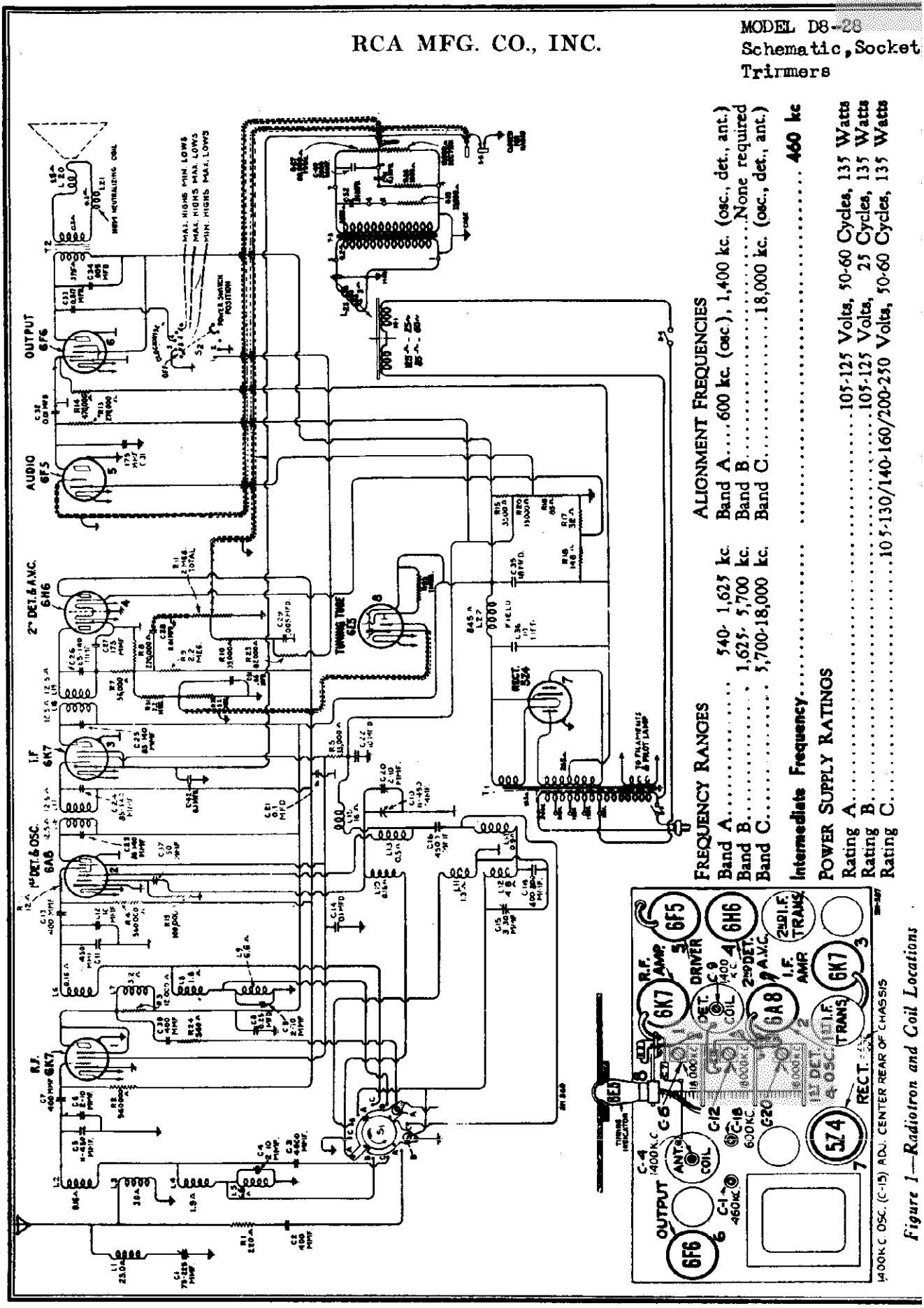

FREQUENCY RANGES

Band A	540- 1,625	kc.
Band B	1,625- 5,700	kc.
Band C	5,700-18,000	kc.

ALIGNMENT FREQUENCIES

Band A....600 kc. (osc.), 1,400 kc. (osc., det., ant.)	
Band B	None required
Band C	18,000 kc. (osc., det., ant.)
Intermediate Frequency	460 kc

POWER SUPPLY RATINGS

Rating A	105-125 Volts, 50-60 Cycles, 135 Watts
Rating B	105-125 Volts, 25 Cycles, 135 Watts
Rating C	105-130/140-160/200-250 Volts, 50-60 Cycles, 135 Watts

Figure 1—Radiotron and Coil Locations

©John F. Rider, Publisher

MODEL D8-28
Chassis Wiring
Pickup

RCA MFG. CO., INC.

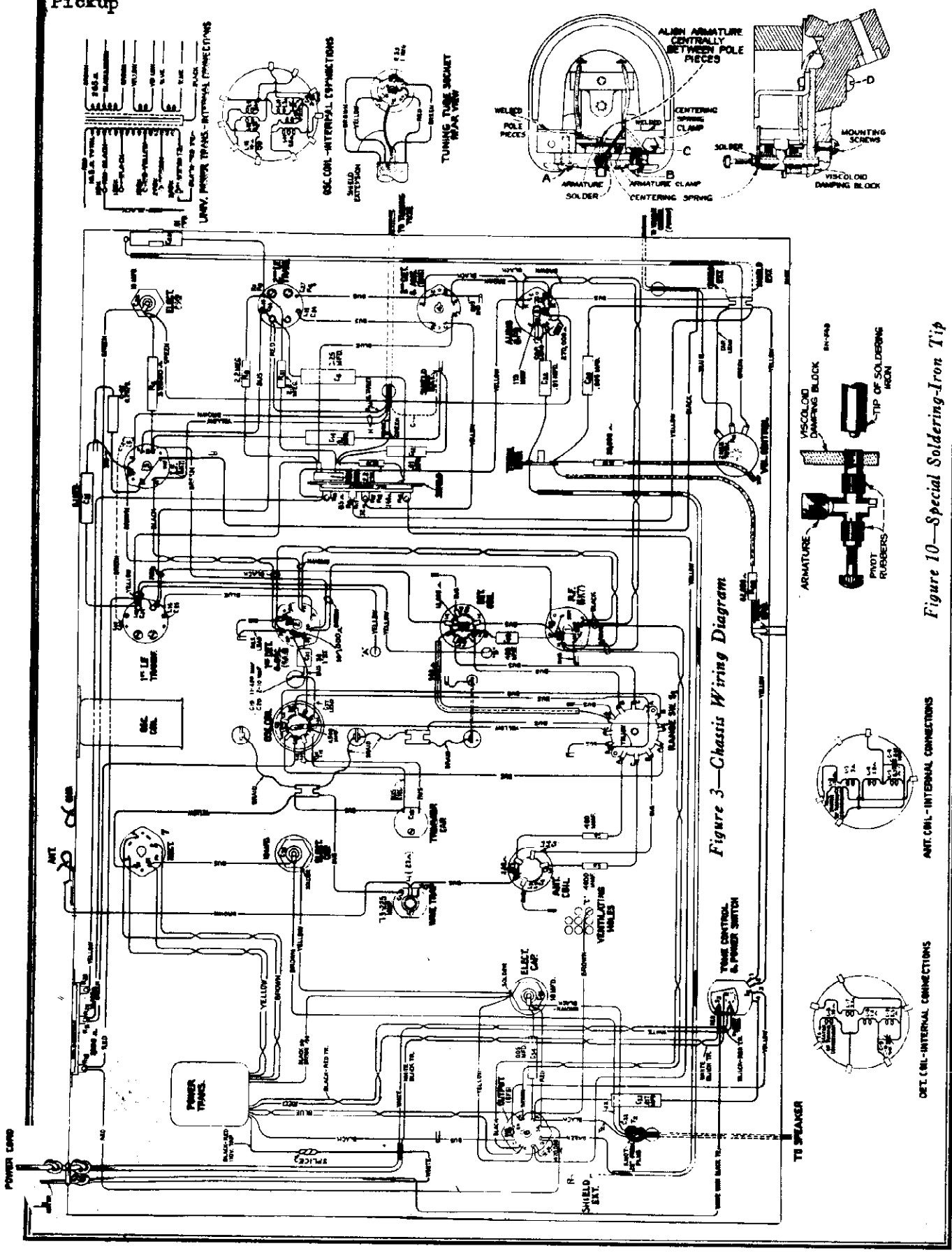

Figure 3—Chassis Wiring Diagram

Figure 10—Special Soldering-Iron Tip

©John F. Rider, Publisher

©John F. Rider, Publisher

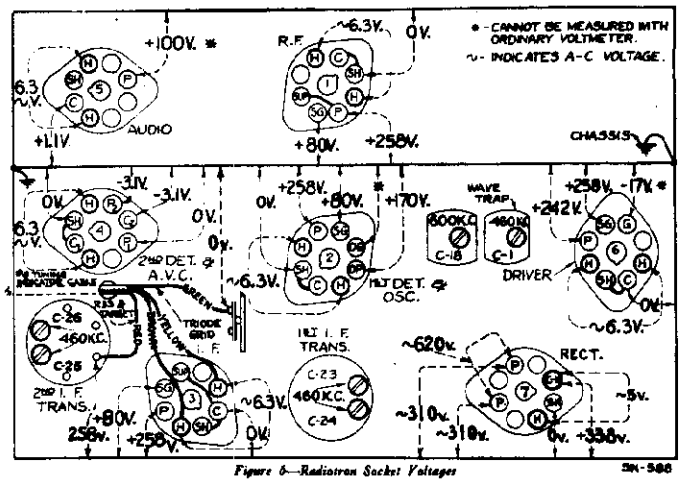

Figure 6—Radiotron Socket Voltages

Measured at 115 volts, 60 cycles—No signal input

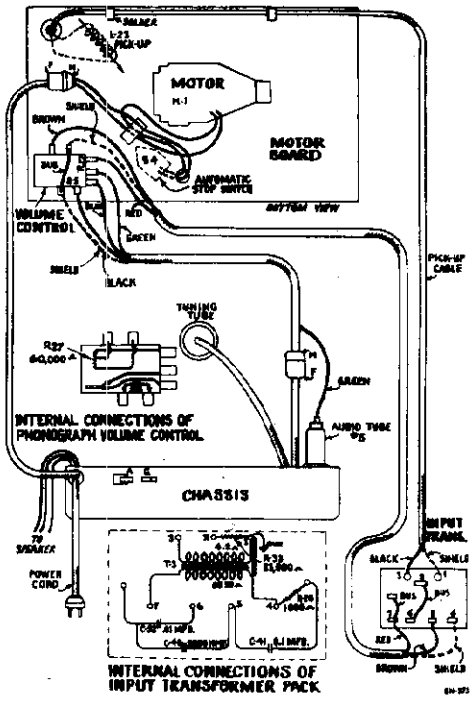

Figure 7—Assembly Wiring

General Description

Magic Brain

The radio receiver incorporates the Junior "Magic Brain" which is a scientifically correct co-ordination of all the parts of the r-f, oscillator, and first detector functions of a Superheterodyne Receiver. This arrangement provides greater efficiency, especially in the short-wave ranges, as all lead lengths are kept as short as possible and all sockets and other parts are located for best possible operation.

Phonograph Mechanism

An improved manually operated phonograph mechanism is used in this model. The 12-inch turntable will accommodate either the 10-inch or the 12-inch phonograph records. The turntable rotates at a speed of 78 r.p.m. A speed regulator is provided for accurate adjustment of this speed. The instrument may be purchased with any one of three ratings as specified under Electrical Specifications. *It is important that a machine of any particular rating be operated at the frequency and voltage for which it is rated.* Attempts to operate at ratings other than specified for the particular instrument may result in damage to both the phonograph motor and the radio receiver. An automatic switch is provided to turn "off" the phonograph motor at the completion of record play when the eccentric-type inside groove record is used.

Tuning Dial

The tuning dial is an illuminated semi-airplane type. Each band is distinctively marked with a separate color for each band. Positions of the range selector knob are plainly marked on the control panel with letters indicating each band position placed over color stripes corresponding to the band colors on the dial. The tuning control is of the dual-ratio type which permits fast tuning through a 10-to-1 drive ratio and vernier tuning through a 50-to-1 drive ratio. The latter is especially advantageous for accurate tuning of the short-wave stations. The new shock-proof condenser mounting reduces microphonic tendencies to a minimum.

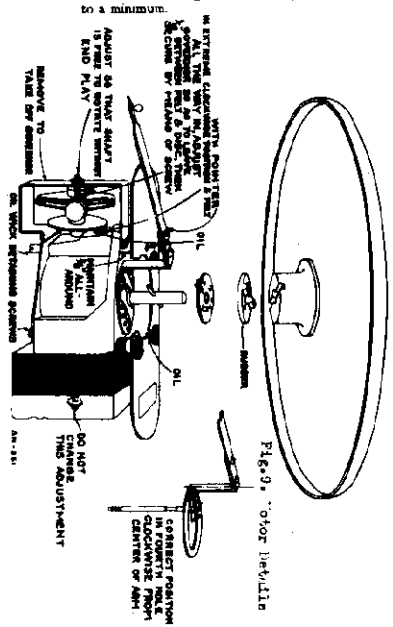

Fig. 9—Motor Details

Circuit Arrangement

The conventional Superheterodyne type of circuit, consisting of an r-f stage, a combined first-detector-oscillator stage, a single i-f stage, a diode-detector-automatic-volume-control stage, an audio voltage amplifier stage, an audio power output stage and a high-voltage rectifier power-supply stage, is used.

Tuned Circuits

The antenna coil system and the detector coil system each consist of a single-primary and three series-connected secondary windings to provide the three ranges of tuning. The oscillator coil system is similarly wound on a single form. A range selector switch (S-1) is used for connecting the various sections of these three coil systems into the circuit to provide operation on the band desired. The coils are tuned by a variable three-section gang condenser having trimmer capacitors in shunt with each section. There are additional trimmer capacitors across the section of each coil used for Band "A." A series trimmer is also associated with the Band "A" oscillator coil.

The intermediate frequency amplifier system consists of an RCA-6K7 in a transformer-coupled circuit. This stage operates at a basic frequency of 460 kc. Each winding of both i-f transformers (input and output) is tuned by an adjustable trimmer.

Detector and A.V.C.

The modulated signal as obtained from the output of the i-f stage is detected by an RCA-6H6 twin-diode tube. The audio frequency secured by this process is transferred to the a-f system for amplification and final reproduction. The d-c voltage which results from detection of the signal is used for automatic volume control. This voltage, which develops across resistor R-8, is applied as automatic control-grid bias to the r-f, first-detector, and i-f tubes through a suitable resistance filter circuit. The second (auxiliary) diode of the RCA-6H6 is used to supply residual bias for the controlled tubes under conditions of little or no signal. This diode, under such conditions, draws current which flows through resistors R-8 and R-9, thereby maintaining the desired minimum operating bias on such tubes. On application of signal energy above a certain level, however, the auxiliary bias-diode ceases to draw current and the a.v.c. diode takes over the biasing function.

Audio System

The manual volume control consists of an acoustically tapered potentiometer in the audio circuit between the output of the detector diode and the input grid of the audio-voltage-amplifier tube. This control has a tone compensating filter connected to it so that the correct aural balance will be obtained at different volume settings.

Resistance-capacitance coupling is used between the first audio stage and the power output stage. The output of the power amplifier is transformer-coupled into the dynamic loudspeaker. High-frequency tone control is effected by a capacitor across the plate circuit of the output tube. Speech-music control is effected by a resistor connected to the compensated volume control circuit. Control of tone is obtained by means of the switch (S-2).

Rectifier

The power required for operation of this receiver is supplied through transformer T-1. This transformer has an efficient electrostatic shield between its primary and secondary windings. This shield prevents interference which is on the power-supply circuit from entering the receiver and conversely reduces the tendency of the receiver to re-radiate into the power circuit. An RCA-1Z4 furnishes the d-c voltages necessary for plate, screen, cathode, and grid potentials. The field winding of the loudspeaker is used as a reactor in the filter circuit from which it simultaneously receives its magnetizing current. The heaters of all Radiotrons are supplied from a low voltage (6.3 volt) winding on the power transformer. One side of this winding is at ground potential.

Wave-Trap Adjustment

With the receiver in operation using its normal antenna, tune station selector to the point at which the intermediate frequency interference is most intense. Then adjust the wave trap trimmer to the point which causes maximum suppression of the interference. This trimmer is adjusted to 460 kc. during manufacture, however, local conditions may require a readjustment, depending upon the interfering frequency.

Phonograph Mechanism

The phonograph motor is of the governor induction type and designed to be simple and foolproof. Under normal operating conditions, service difficulties should be negligible. Occasionally, however, certain adjustments may be required. These adjustments are illustrated and explained in Figure 9. Application of oil to the felt pad which rubs against the governor disc will insure smooth operation.

Magnetic Pickup

The pickup used in the phonograph unit is of an improved design, having several variations from the usual type of pickup. The magnetic assembly is one rigid piece. The horseshoe magnet is solidly welded to the pole pieces and is irremovable. There is a centering spring attached to the armature to maintain proper adjustment and provides a damping effect on the movement of the armature. The frequency response is uniform over a wide range.

Service operations which may be necessary on the pickup are as follows:

Centering Armature

Refer to Figure 8 showing the pickup inner structure. The armature is shown in its proper relation to the magnet pole pieces, i. e., exactly centered. Whenever this centering adjustment has been disturbed, the screws A, B, and C should be loosened and the armature clamp adjusted to the point where the vertical axis of the armature is at right angles to the horizontal axis of the pole pieces, and centered between them. This centering operation may be facilitated by inserting a small rod or nail into the armature needle hole, using it as a lever to test the angular movement of the armature. The limitations of the movement in each direction will be caused by the armature striking the pole pieces. The proper adjustment is obtained when there is equal angular displacement of the armature and adjustment rod or nail to each side of the vertical axis of the magnet and coil assembly. The screws A and B should then be secured, observing care not to disturb the adjustment of the armature clamp. Then place the pickup in a vise and secure the centering spring-clamp by means of the screw C, allowing the centering spring to remain in the position at which the armature is exactly centered between the pole pieces. With a little practice, the correct adjustment of the armature may be readily obtained. The air gap between the pole pieces and the armature should be kept free from dust, filings, and other such foreign materials which would obstruct the movement of the pickup armature.

Damping Block

The viscoloid block which is attached to the back end of the armature shank serves as a mechanical filter to eliminate undesirable resonances and to cause the frequency response to be uniform. Should it be necessary to replace this damping block, it may be done by removing screw D and the cover support bracket from the mechanism and taking off the old viscoloid block. The surface of the armature which is in contact with the viscoloid should be thoroughly cleaned with fine emery cloth. Then insert the new block so that it occupies the same position as it did originally. Make certain that the block is in correct vertical alignment with the armature. The hole in the new viscoloid block is somewhat smaller than the diameter of the armature in order to permit a snug fit. With the viscoloid aligned on the armature, screw D and the cover support bracket should then be replaced. Heat should be applied to the armature (viscoloid side) so that the viscoloid block will fuse at the point of contact and become rigidly attached to the armature. A special tip soldering iron constructed as shown in Figure 10 will be found very useful in performing this operation. The iron should be applied only long enough to slightly melt the block and cause

MODEL D8-28
Alignment, Parts
Loudspeaker, Transformer

RCA MFG. CO., INC.

a small bulge on both sides.

Replacing Coil

Whenever there is defective operation due to an open or shorted pickup coil, this coil should be replaced. The method of replacement will be obvious upon inspection of the pickup assembly and by study of the cut-away illustrations. Make sure that the new coil is properly centered with the hole in the support strap and glued securely in that position. It is important to readjust the armature as previously explained after re-assembly of the mechanism. Only rosin core solder should be used for soldering the coil leads in the pickup. This same type of solder should be used when necessary for soldering the centering spring to the armature.

Magnetizing

Loss of magnetization will not usually occur when the pickup has received normal care, due to the fact that the magnet and pole pieces are one unit and the magnetic circuit remains closed at all times. When the pickup has been mishandled, subjected to a strong a-c field, jolted, or dropped, there may be an appreciable loss of magnetic strength, in which case it will be necessary to re-magnetize the entire structure. This should be done by first removing the pickup cover and then placing the pickup assembly on the poles of a standard pickup magnetizer such as the RCA Pickup Magnetizer, Stock No. 9549, and charging the pickup in accordance with the instructions accompanying the magnetizer. It is recommended that the pickup be magnetized with the armature in place. This will require that one pole piece on the pickup magnetizer be rotated 180 degrees. This gives the desired clearance for the armature clamp assembly. It is preferable to check the polarity of the pickup magnet and to re-magnetize it so that the same polarity is maintained.

SERVICE DATA

The various diagrams of this bulletin contain such information as will be needed to isolate causes for defective operation when such a condition develops. Values of the resistors, capacitors, coils, etc., are indicated adjacent to the symbols signifying these parts on the diagrams. Identification tables, such as R-1, L-2, C-1, etc., are provided for reference between the diagrams and the replacement parts list. Locating of the parts in the schematic circuit is facilitated by the fact that the numerical titles increase from left to right on the diagram. The coils, reactors, and transformer windings are rated in terms of their d-c resistances only. Resistances of less than one ohm are generally omitted.

Alignment Procedure

Precise alignment is vital to the proper functioning of this receiver. There are four trimming adjustments provided in the i-f system, three in the oscillator coil system, two in the detector coil system, and two in the antenna coil system. Each of these trimmers has been accurately adjusted during manufacture and should remain properly aligned unless affected by abnormal conditions of climate or have been altered for service purposes. Incorrect alignment is usually evidenced by loss of sensitivity, improper tone quality, and poor selectivity. These indications will generally be present together.

The correct performance of the receiver can only be obtained when the alignment is performed with adequate and reliable test apparatus. The manufacturer of this instrument has a complete assortment of such service equipment available. This equipment illustrated and described on a separate page of this booklet, may be purchased from authorized distributors and dealers.

An oscillator (signal generator) is required as a source of the specified alignment frequencies. Visual indication of the receiver output during the adjustments is necessary to enable the serviceman to obtain an accuracy of alignment which is not possible by listening to the signal. The RCA Victor Stock No. 9595 Full-Range Oscillator and the RCA Victor Stock No. 4317 Neon Output Indicator are especially suitable and fulfill the above requirements.

The following procedure should be followed in adjusting the various trimmer capacitors:

I-F Trimmer Adjustments

The four trimmers of the two i-f transformers are located as shown by Figure 6. Each must be aligned to a basic frequency of 460 kc. To do this, attach the Output Indicator across the voice coil circuit or across the output transformer primary. Connect the output of the test oscillator between the control-grid of the RCA-6A8 first detector tube and chassis-ground. Tune the oscillator to 460 kc. Advance the receiver volume control to its full-on position and adjust the receiver tuning control to a point within its range where no interference is encountered either from local broadcast stations or the heterodyne oscillator. Increase the output of the test oscillator until a slight indication is apparent on the output indicator. Then adjust the two trimmers, C-25 and C-26, of the second i-f transformer to produce maximum (peak) indicated receiver output. Then, adjust the two trimmers, C-23 and C-24, of the first i-f transformer for maximum (peak) receiver output as shown by the indicating device. During these adjustments, regulate the test oscillator output so that the indication is always as low as possible. By doing so, broadness of tuning due to a-v-c action will be avoided. It is advisable to repeat the adjustment of all i-f trimmers a second time to assure that the inter-action between them has not disturbed the original adjustment.

R-F Trimmer Adjustments

The seven trimmers associated with the r-f, first detector and oscillator tuned circuits have their locations shown by Figure 1. The three trimmers which are at all times directly in shunt with the variable tuning condenser necessitate that the high frequency range (Band C) be aligned first. The range selector switch should therefore be turned to its Band C position and the first adjustments. The Output Indicator should be left across the coil of the output system. Attach the output terminals of the test oscillator to the antenna and ground terminals of the receiver.

Calibrate the dial by rotating the tuning control until the variable condenser plates are in their full mesh (maximum capacity) position and adjusting the dial pointer so that its end points to the horizontal graduation (530 kc.) at the low frequency end of the Band A scale.

Proceed further as follows:

(a) Adjust the test oscillator to 18,000 kc. and set the receiver tuning control to a dial reading of 18,000 kc.

(b) Regulate the output of the test oscillator until a slight indication is perceptible at the receiver output. Then adjust the trimmer, C-20, on the oscillator section of the variable condenser to the point at which it produces maximum indicated receiver output. Two points may be found, each of which produces such a maximum. The one of maximum trimmer capacitance is correct and should be used. (The oscillator will be 460 kc. below the signal frequency at this adjustment point.)

(c) Adjust the trimmer, C-12, of the detector section of the variable condenser, simultaneously rocking the receiver tuning control backward and forward through the 18,000 kc. input signal, until maximum receiver output results from these combined operations. Rocking of the variable condenser will prevent inaccurate adjustment which would otherwise be caused by the inter-action between the heterodyne oscillator circuit and the detector tuned circuit.

(d) With the receiver tuning control set to 18,000 kc. adjust the trimmer, C-6, on the antenna section of the variable condenser to the point which produces maximum (peak) indicated receiver output.

(e) Change the receiver range selector to its Band A position and set the receiver tuning control to a dial reading of 1,400 kc. Tune the test oscillator to 1,400 kc. and regulate its output to produce a slight indication on the receiver output indicating device.

(f) Adjust the high frequency trimmers of the Band A oscillator, detector, and antenna coils, C-15, C-9, and C-4 respectively, to the points at which each produces maximum indicated receiver output.

(g) Shift the test oscillator frequency to 600 kc. and tune the receiver to pick up this signal, disregarding the dial reading at which it is best received.

(h) Tune the low frequency trimmer, C-18, of the oscillator Band A coil, simultaneously rocking the tuning control of the receiver backward and forward through the signal, until maximum indicated receiver output results from these combined operations. The adjustment of C-20, C-12, and C-6 should be corrected at 18,000 kc. as in (b), (c), and (d); also C-15, C-9, and C-4 should be corrected at 1,400 kc. as in (f) to compensate for any changes caused by the adjustment of the low frequency oscillator coil trimmer.

Radiotron Socket Voltages

The voltage values indicated from the Radiotron socket contacts to chassis on Figure 6 will assist in the location of causes for faulty operation. Each value as specified should hold within ± 20% when the receiver is normally operative at its rated supply voltage. Variations in excess of this limit will usually be indicative of trouble in the basic circuits. The voltages given are actual operating values and do not allow for inaccuracies which may be caused by the loading effect of a voltmeter's internal resistance. This resistance should be duly considered for all readings. The amount of circuit resistance shunting the meter during measurement will determine the accuracy to be obtained, the error increasing as the meter resistance becomes comparable to or less than the circuit resistance. For the majority of readings, a meter having an internal resistance of 1000 ohms per volt will be satisfactory when the range used for each reading is chosen as high as possible consistent with good readability.

Standard Transformer

The transformer used on some models of this instrument is adaptable for voltages and frequencies as given under Ratings A and B of Electrical Specifications. Its schematic and wiring are shown by Figure 5.

Radiotron Complement

(1)	RCA-6K7	Radio-Frequency Amplifier
(2)	RCA-6A8	First Detector-Oscillator
(3)	RCA-6K7	Intermediate Amplifier
(4)	RCA-6H6	Second Detector-A.V.C.
(5)	RCA-6F5	Audio Voltage Amplifier
(6)	RCA-6F6	Audio Power Amplifier
(7)	RCA-5Z4	Full-Wave Rectifier
(8)	RCA-6E5	Tuning Indicator

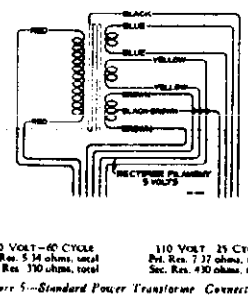

110 VOLT—60 CYCLE
Pri. Res. 5.14 ohms, total
Sec. Res. 330 ohms, total

110 VOLT 25 CYCLE
Pri. Res. 7.37 ohms, total
Sec. Res. 430 ohms, total

Figure 5—Standard Power Transformer Connections

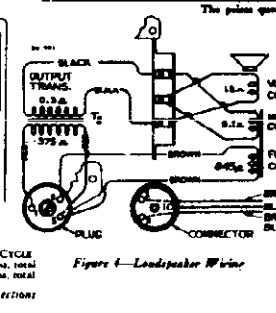

Figure 4—Loudspeaker Wiring

REPLACEMENT PARTS

Insist on genuine factory tested parts, which are readily identified and may be purchased from authorized dealers

Stock No.	Description	List Price
	RECEIVER ASSEMBLIES	
9237	Bushing—Variable tuning condenser mounting bushing assembly—Package of 3	90.45
11627	Cable—Radiotron tuning tube cable complete with socket	1.36
11759	Cable—Phonograph input cable complete with 4-contact female connector stock 4151—connects chassis to cable stock 11948	92
11330	Cap—Contact cap—Package of 5	.30
11465	Capacitor—Adjustable capacitor—(C18)	.48
11289	Capacitor—50 MMfd —(C37)	.26
9116	Capacitor—175 MMfd —(C31)	.18
11290	Capacitor—400 MMfd —(C2, C7, C13, C18)	.25
11401	Capacitor—.0001 Mfd —(C3)	.38
4868	Capacitor—.005 Mfd.—(C19, C34)	.20
4906	Capacitor—.017 Mfd.—(C33)	.25
11395	Capacitor—.01 Mfd.—(C28)	.18
4858	Capacitor—.01 Mfd.—(C32)	.25
4886	Capacitor—.05 Mfd.—(C5)	.20
4839	Capacitor—0.1 Mfd.—(C14)	.38
4841	Capacitor—0.1 Mfd.—(C31)	.22
11414	Capacitor—0.1 Mfd.—(C1)	.30
5170	Capacitor—0.25 Mfd —(C8)	.23
11340	Capacitor—10 Mfd.—(C36)	1.08
11387	Capacitor—10 Mfd.—(C22)	.96
5212	Capacitor—18 Mfd.—(C35)	1.16
5238	Clip—Antenna terminal board with clip, insulating strip and rivets	.14
11600	Coil—Antenna coil—(L2, L3, L4, L5, C4, R1)	1.76
11601	Coil—Detector coil—(L6, L7, L8, L9, C9, R3)	1.78
11602	Coil—Oscillator coil—(L10, L11, L12, L13, L14, L15, C15, C16	2.15
11309	Condenser—Three-gang variable tuning condenser—(C5, C6, C11, C12, C19, C20)	5.02
4153	Connector—4-contact female connector for cable stock 11759	.48
11091	Dial—Station selector dial scale	.78
11384	Foot—Chassis foot assembly—Package of 3	.70
11093	Indicator—Station selector indicator pointer	.28
5236	Lamp—Dial lamp—Package of 5	.70
11395	Resistor—Voltage divider resistor—comprising one 1,500 ohm and one 11,000 ohm sections—(R15, R20)	.74
11329	Resistor—Voltage divider resistor—comprising one 148 ohm, one 32 ohm and one 83 ohm sections—(R16, R17, R18)	.52
11369	Resistor—12 ohms—Flexible type—complete with contact cap—(R23)	.32
11314	Resistor—560 ohms—Carbon type—½ watt—(R34)—Package of 5	1.00
8073	Resistor—51,000 ohms—Carbon type—½ watt—(R3)—Package of 5	1.00
11332	Resistor—10,000 ohms—Carbon type—½ watt—(R10)—Package of 5	1.00
11365	Resistor—82,000 ohms—Carbon type—½ watt—(R21)—Package of 5	1.00
5118	Resistor—100,000 ohms—Carbon type—½ watt—(R19)—Package of 5	1.00
11325	Resistor—270,000 ohms—Carbon type—½ watt—(R13)—Package of 5	1.00
11372	Resistor—4.0,000 ohms—Carbon type—½ watt—(R14)—Package of 5	1.00
11397	Resistor—50,000 ohms—Carbon type—1/10 w tt—(R2, R4)—Package of 5	.93
11626	Resistor—4.3 megohms—Carbon type—½ watt—(R9, R11, R32)—Package of 5	1.00
11603	Shield—Antenna or detector coil shield	.36
11604	Shield—Oscillator coil shield	.24
11390	Shield—Intermediate frequency transformer shield	.23
11199	Socket—Dial lamp socket	.14
11195	Socket—5-contact rectifier Radiotron socket	.15
11 98	Socket—7-contact 6K7—6F7—or 6H6 Radiotron socket	.15
11176	Socket—8-contact 6A8 or 6F8 Radiotron socket	.15
11386	Switch—Range switch—(S1)	1.16
11392	Switch—Tone control and power switch assembly—(S2, S3)	1.14
11388	Transformer—First intermediate frequency transformer—(L16, L17, C25, C24)	1.90
11389	Transformer—Second intermediate frequency transformer—(L18, L19, C27, C26 C27, R7, R8)	3.82
11803	Transformer—Power transformer—105-125 volts—50-60 cycles	4.38
11804	Transformer—Power transformer—105-125 volts—25-50 cycles	6.02
11805	Transformer—Power transformer—105-130, 140-160, 195-250, volts—40-60 cycles—(T11)	7.95
11391	Trap—Wave trap—(L1, C1)	1.22
11237	Volume control—(R11)	1.20
	MOTOR ASSEMBLIES	
11701	Cone assembly—Governor complete for phonograph motor—Stock No. 11701 or No. 11702	3.05
11701	Motor—Phonograph turntable motor—110 volts—50 to 60 cycles—(M1)	21.30
11702	Motor—Phonograph turntable motor—110 volts 25 cycles	53.55
	MOTOR BOARD ASSEMBLIES	
4184	Box—Glass needle box (cup)	.10
7084	Cover—Turntable cover	.40

Stock No.	Description	List Price
11704	Damper—Turntable rubber damper and damper plate	.14
4196	Escutcheon—Speed regulator escutcheon plate	.16
4197	Screw—Motor mounting screw assembly—comprising four screws, four lock-washers, four spacers, and four nuts	.22
11696	Turntable—Complete	2.48
11695	Volume Control—Phonograph volume control—(R27, S5)	1.60
	ECCENTRIC AUTOMATIC BRAKE SWITCH ASSEMBLIES	
3994	Cover—Eccentric automatic switch cover and screw	.16
10174	Springs—Automatic brake springs—comprising one each of four springs—Package of 2	.50
6096	Switch—Eccentric automatic brake and switch assembly—less switch cover	2.50
3122	Switch—Eccentric automatic switch only—less cover—(S4)	.75
	PICKUP AND ARM ASSEMBLIES	
11944	Arm—Pickup arm complete—less escutcheon and pickup unit	4.50
11724	Armature—Pickup armature	.38
6146	Back—Pickup housing back	.45
11948	Coil—Pickup coil—(L23)	.85
3121	Cover—Pickup back cover	.18
11708	Cover—Pickup front cover	.15
3127	Damper—Pickup damper—Package of 5	.65
3390	Escutcheon—Pickup arm escutcheon	.46
11943	Pickup Unit—Complete	4.80
3389	Rod—Eccentric automatic brake trip rod—Package of 3	.40
3387	Screw Assembly—Pickup mounting screw assembly—comprising one screw, one lockwasher and one nut—Package of 10	.40
11549	Screw—Pickup front cover screw—Package of 10	.42
11547	Screw—Pickup needle holding screw—Package of 10	.42
	REPRODUCER ASSEMBLIES	
11282	Board—Terminal board assembly with two lead wire clips	.18
11281	Box—Yoke and core assembly bolt and nut	.16
8080	Bracket—Output transformer mounting bracket	.14
11257	Clamp—Cone center connector clamping nut and screw assembly—Package of 3	.35
11254	Coil—Field coil—(L20)	2.00
11333	Coil—Hum neutralizing coil—(L21)	.30
11258	Cone—Reproducer cone—(L22)—Package of 5	3.85
5118	Connector—3-contact male connector for reproducer	.25
5119	Connector—3-contact female connector plug for reproducer cable	.25
9619	Reproducer—Complete	6.85
11253	Transformer—Output transformer—(T2)	1.56
11686	Washer—Spring washer used to hold field coil assembly—Package of 3	.20
	MISCELLANEOUS ASSEMBLIES	
12038	Bead—Rubber bead used with tuning tube—Package of 10	.35
11996	Bracket—Tuning tube mounting bracket and clamp assembly	.22
11947	Cable—Two-conductor shielded cable approx. 35-in. long—antenna cable used to input transformer	.85
11946	Cable—Three-conductor shielded cable approx. 34-in. long—radio tuning tube connector stock 6123 and grid cap—connects volume control to chassis cable stock 11759	1.30
6123	Cap—Grid cap—connects to connector for cable stock 11946	.30
11276	Escutcheon—Station selector escutcheon	.40
11376	Escutcheon—Tuning tube escutcheon and crystal	.20
11582	Knob—Range switch knob—Package of 5	.50
11610	Knob—Tuning control knob assembly—comprising one small and one large knob—Package of 5	1.00
11347	Knob—Volume control or tone control knob—Package of 5	.75
11582	Resistor—1 megohm—Carbon type—1/10 watt—(R33)—Package of 5	.75
11210	Screw—Chassis mounting screw assembly—Package of 5	.28
11581	Socket—Tuning tube socket and cover	.45
11349	Spring—Retaining spring for knobs, Stock No. 11347, No. 11582 and small knob in Stock No. 11610—Package of 5	.15
4002	Spring—Retaining spring for large knob in Stock No. 11610—Package of 10	.16
3391	Spring—Motor board mounting spring assembly—comprising one bolt, one "C" washer, two cup washers, one bottom spring, one lockwasher, and one cup nut	.30
11949	Transformer—Phonograph input transformer—(T3, R36, R38, C40, C41, C42)	7.05

The prices quoted above are subject to change without notice.

Mechanical Specifications

Height	43½ inches
Width	23½ inches
Depth	14¾ inches
Weight (Net)	85 pounds
Weight (Shipping)	144 pounds
Chassis Base Dimensions	13⅜ inches x 7¾ inches x 2½ inches

LOUDSPEAKER

Type	12-inch Electrodynamic
Voice Coil Impedance	2½ Ohms at 400 Cycles

PHONOGRAPH

Type	Manual
Turntable Speed	78 R.P.M.

POWER OUTPUT RATINGS

Undistorted	2½ Watts
Maximum	5 Watts
Type of Pickup	Improved Low-Impedance Magnetic
Pickup Impedance	7 Ohms at 1,000 Cycles

©John F. Rider, Publisher

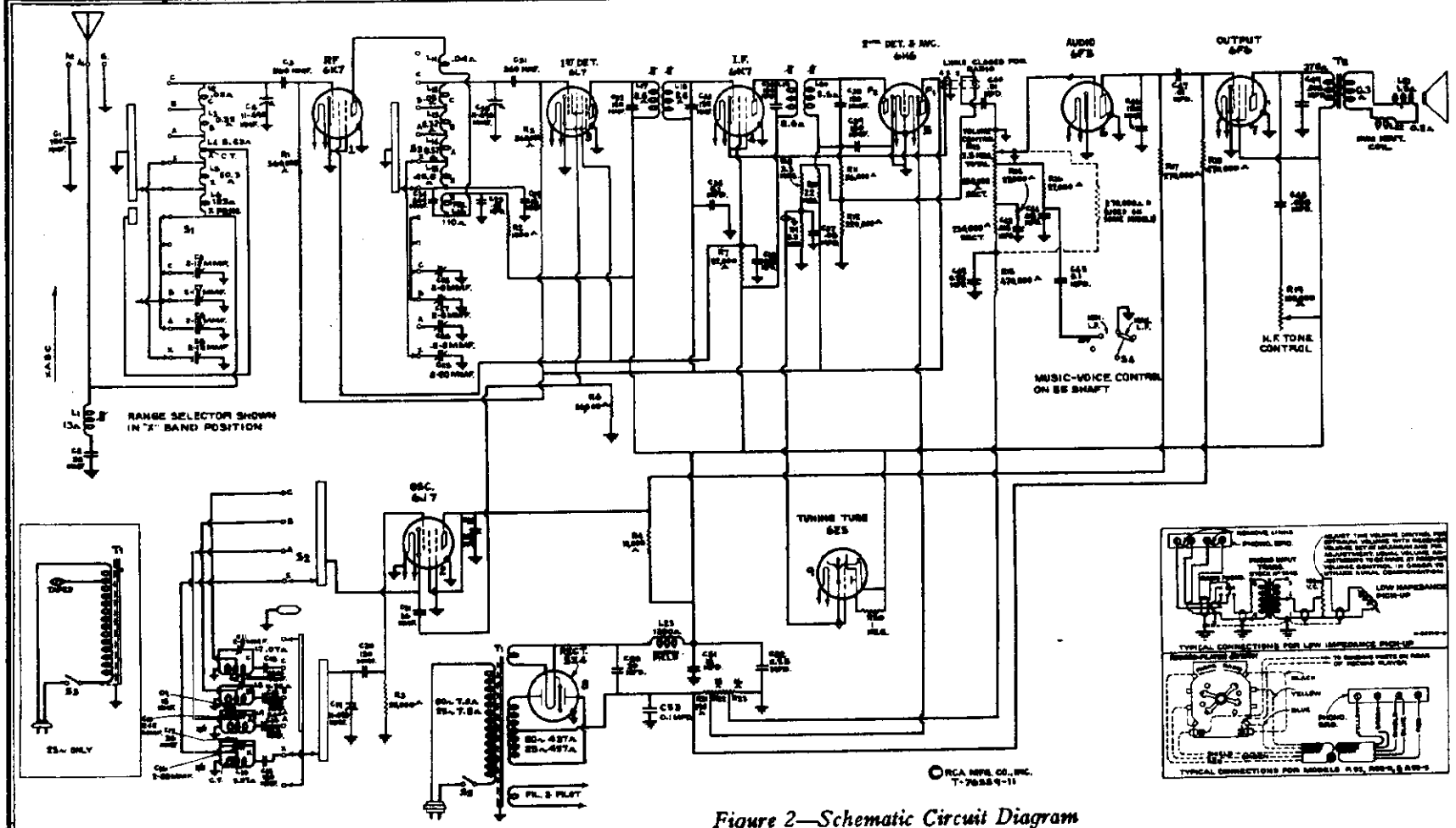

Figure 2—Schematic Circuit Diagram

(* 270,000-ohm resistor not required when replacing volume control with Stk. No. 12861)

IF PEAK 460 KC.

Frequency Ranges

"Long Wave" (X)	150-410 kc
"Standard Broadcast" (A)	530-1,800 kc
"Medium Wave" (B)	1,800-6,400 kc
"Short Wave" (C)	6,400-23,000 kc
Intermediate Frequency	460 kc

Alignment Frequencies

"Long Wave" (X)	175 kc (osc.), 350 kc (osc., det., ant.)
"Standard Broadcast" (A)	600 kc (osc.), 1,500 kc (osc., det., ant.)
"Medium Wave" (B)	6,000 kc (osc., det., ant.)
"Short Wave" (C)	20,000 kc (osc., det., ant.)

Loudspeaker

Type	Electrodynamic
Impedance (v.c.)	2.2 ohms at 400 cycles

Power Output

Undistorted	2 watts
Maximum	4.5 watts

MODEL 9K
Chassis Wiring

RCA MFG. CO., INC.

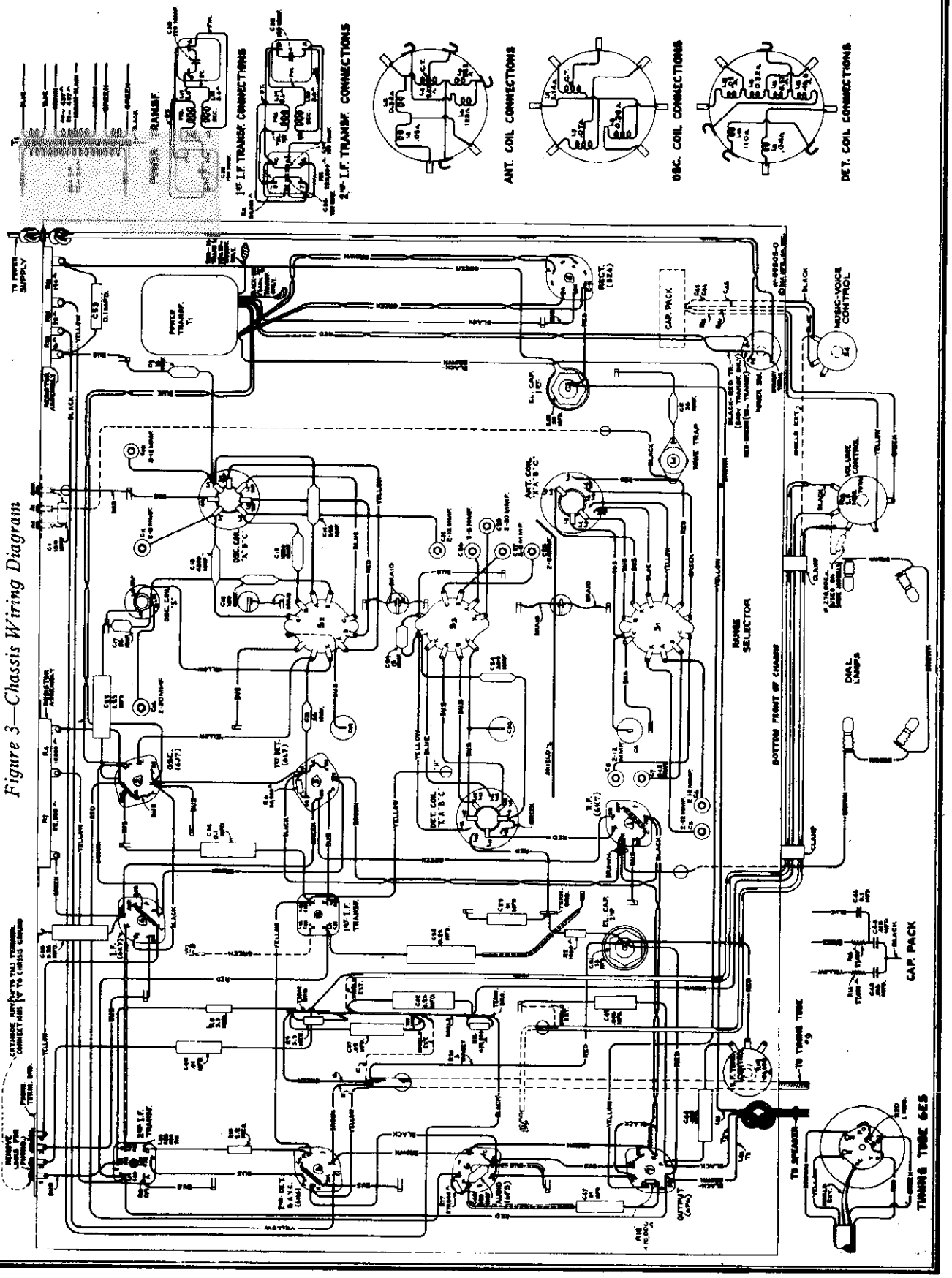

Figure 3—Chassis Wiring Diagram

©John F. Rider, Publisher

RCA MFG. CO., INC.

MODEL 9K
Socket, Trimmers
Dial Mechanism
Transformer, Speaker
Visual Alignment

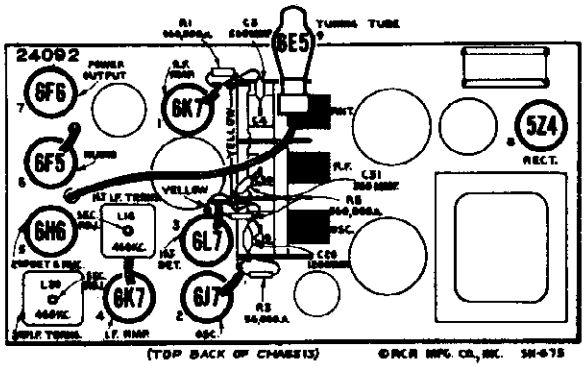

Figure 1—Radiotron and I-F Trimmer Locations

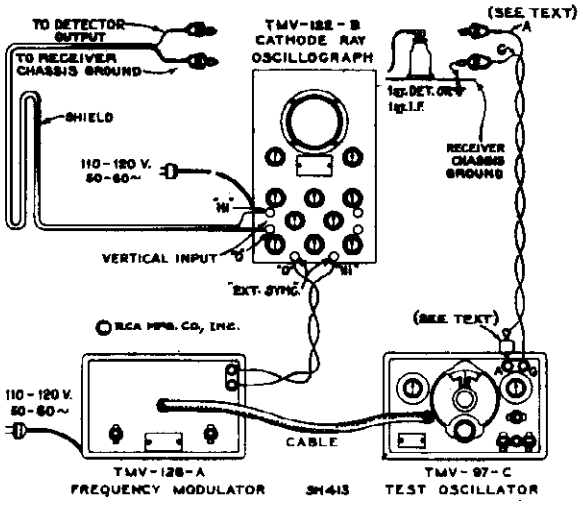

Figure 4—Alignment Apparatus Connections

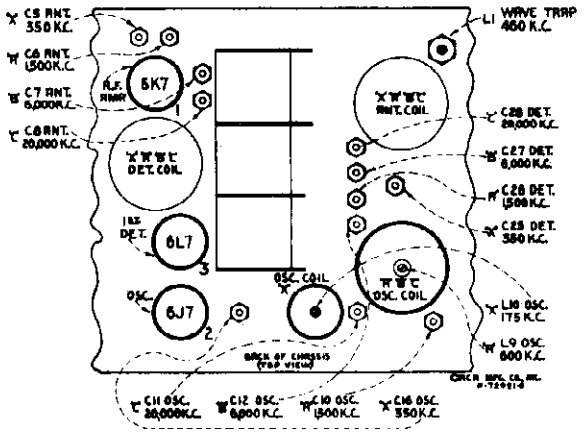

APPROX. DISTANCE IN INCHES-CHASSIS BASE TO TOP OF TRIMMER PLUNGER

BAND	OSC.	DET.	ANT.
'C'	1 1/2	1 5/16	1 1/16
'B'	1 1/2	1 5/16	1 1/16
'A'	1 5/16	1 5/16	1 1/16
'X'	2 5/16	1 5/16	1 1/4

Figure 5—R-F Trimmer Locations

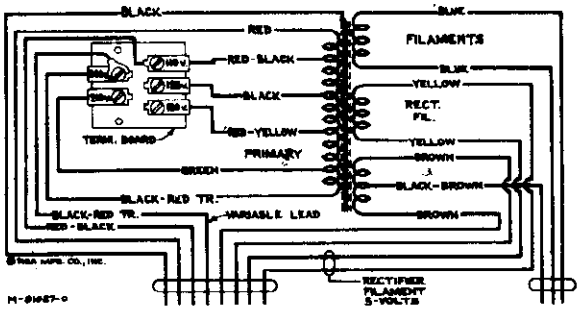

Primary resistance—13.5 ohms total
Secondary resistance—370 ohms total

Figure 8—Universal Transformer

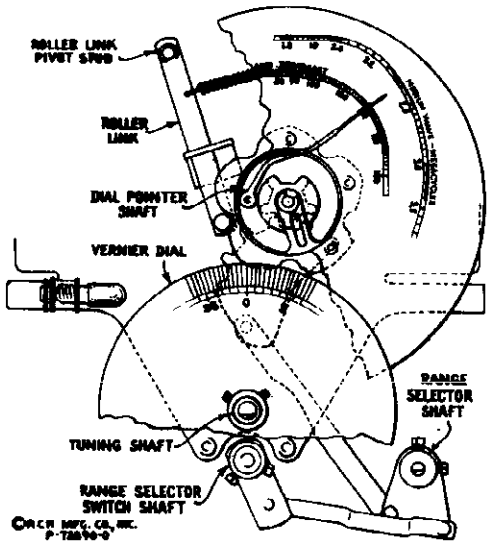

Figure 9—Selector Dial Change Mechanism

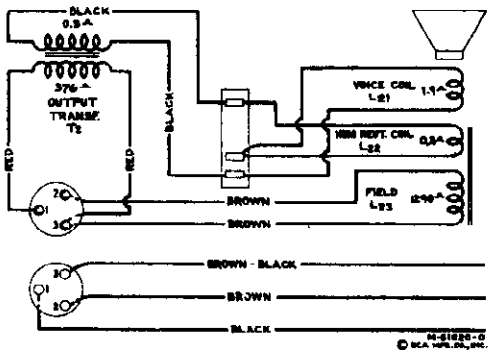

Figure 10—Loudspeaker Wiring

©John F. Rider, Publisher

MODEL 9K
Resistance,

RCA MFG. CO., INC.

Voltage

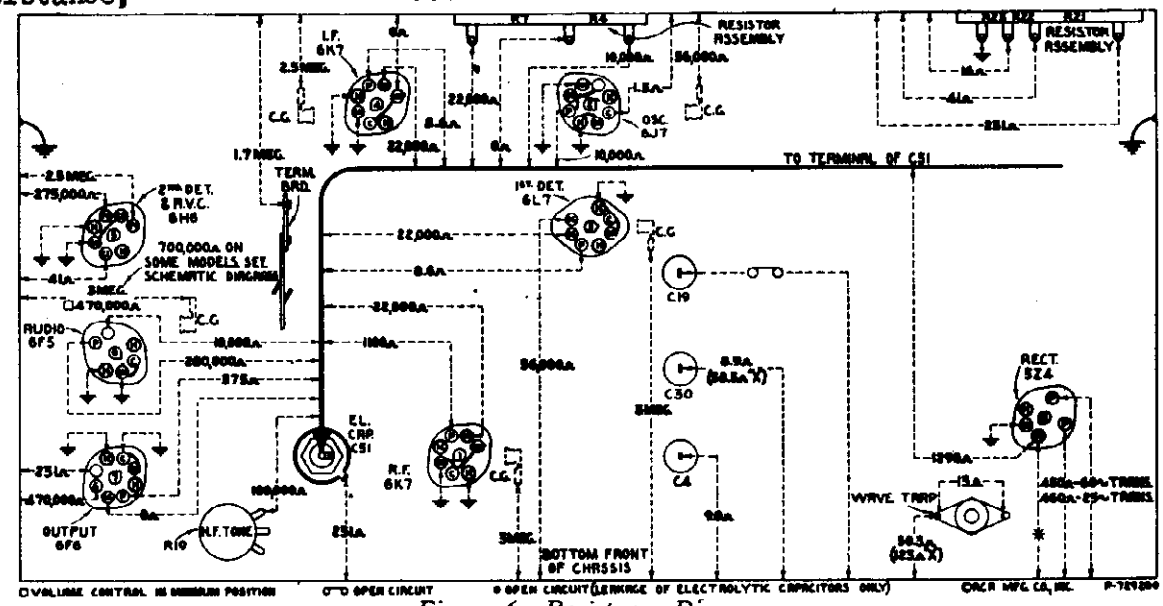

Figure 6—Resistance Diagram

Power supply disconnected—Radiotrons in sockets—Tuning condenser in full-mesh—Range selector in "Standard broadcast" position—Volume control maximum—Tone control clockwise

The resistance values shown between Radiotron socket contacts, grid caps, resistors, and terminals to receiver chassis ground or other pertinent point on figure 6, permit a rapid continuity check of the circuits. The use of this diagram in conjunction with the Schematic Circuit Diagram, figure 2, and Wiring Diagram, figure 3, will permit the location of certain troubles which might otherwise be difficult to ascertain. Each value as specified should hold within ± 20%. Variations in excess of this limit will usually be indicative of trouble in circuit under test. In all cases of measuring the resistance between points of the circuit and ground, it will be necessary to connect the negative terminal of the resistance meter to chassis-ground. If the polarity of the resistance meter is not known, it may be readily ascertained by connecting a d-c voltmeter of indicated polarity across the terminals of the device.

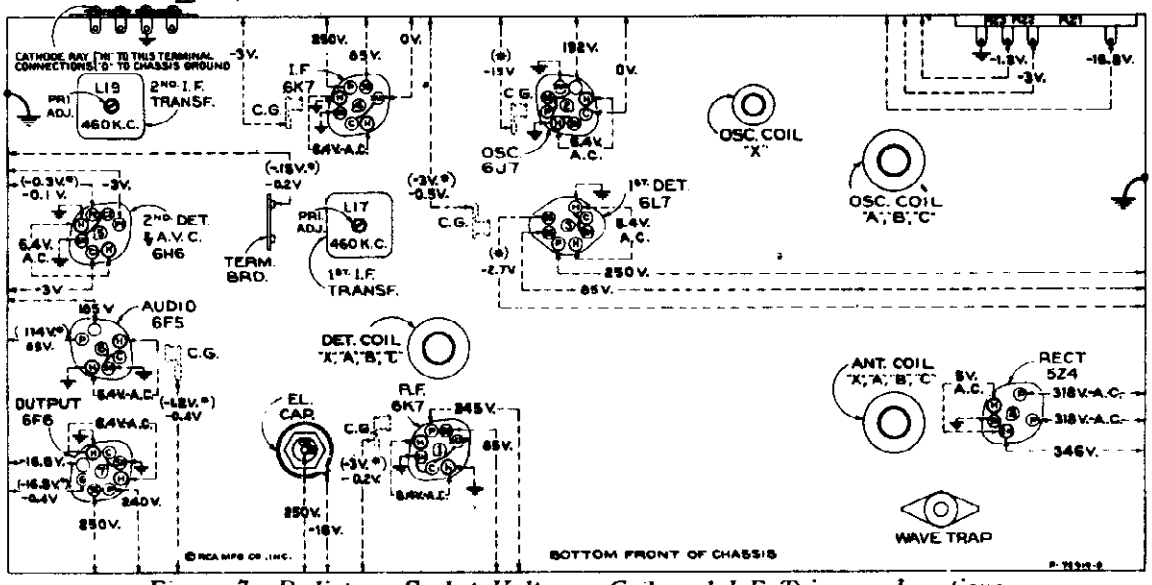

Figure 7—Radiotron Socket Voltages, Coil, and I-F Trimmer Locations

Measured at 115 volts, 60-cycle supply—Tuned to approximately 1,000 kc—No signal being received—Volume control minimum

Note: Two voltage values are shown for some readings. The higher value shown in parenthesis with asterisk (*) indicates operating conditions without voltmeter loading. The lower value is the actual measured voltage and differs from the higher value because of the additional loading of the voltmeter through the high series circuit resistance.

The voltage values indicated from the Radiotron socket contacts, grid caps, resistors, and terminals to receiver chassis ground on figure 7 will assist in locating cause for faulty operation. Each value as specified should hold within ± 20% when the receiver is normally operative at its rated line voltage. Variations in excess of this limit will usually be indicative of trouble in the basic circuits. To duplicate the conditions under which the voltages were measured requires a 1,000-ohm-per-volt d-c meter, having ranges of 10, 50, 250, 500, and 1,000 volts. Use the nearest range above the specified measured voltage. A-c voltages were measured with a corresponding a-c meter.

©John F. Rider, Publisher

RCA MFG. CO., INC.

MODEL 9K
Circuit Data
Alignment, Part 1

General Description

This receiver represents the result of thorough development, design, and substantial manufacture. Noteworthy technical improvements have been applied in achieving marked advantages of operation, and efficiency of performance.

Model 9K is a nine-tube, console-type, superheterodyne receiver with a twelve-inch electrodynamic loudspeaker. Design features incorporated in this receiver include a built-in doublet antenna coupler, improved plunger-type air dielectric adjustable trimming capacitors in the antenna, detector, and oscillator coil circuits, tuned r-f amplifier, high-efficiency first detector (converter) with separate oscillator, magnetite core adjusted i-f transformers, low-frequency oscillator tracking, and wave-trap; two-point aural compensated volume control; music-speech switch; automatic volume control; phonograph terminal board; new tel-vetor dial and a dust proof electrodynamic loudspeaker.

Service convenience has been a controlling factor in the layout of the chassis parts and wiring. The assembly of these various elements is such that the number of conductors is minimized, with all important connections being readily accessible. Trimming adjustments are located at accessible points. A double tuning-knob arrangement permits the choice of either a twenty-to-one or a hundred-to-one dial drive ratio. The latter permits ease of tuning, especially in the "Medium wave" and "Short wave" bands.

Circuit Arrangement

The conventional type of superheterodyne circuit is used. It consists of an r-f amplifier stage, a first-detector (converter) stage, a separate oscillator stage, an i-f amplifier stage, a diode detector—automatic-volume-control stage, an audio voltage-amplifier stage, a power-amplifier stage, a tuning indicator "Magic Eye," and a full-wave rectifier.

A single-wire antenna, or a doublet antenna, when connected to the proper input terminals of the receiver, is coupled to the control grid of the RCA 6K7 r-f amplifier tube through the tuned r-f transformer consisting of L6, L7, L4, L3, and L2. A unique method of switching is used. In the "Long wave" (X) band, L6 becomes the primary with L5, L4, L3, and L2 as secondary. In the "Standard broadcast" (A) band, L5 becomes the primary with L4, L3, and L2 as secondary (L6 shorted out). In the "Medium wave" (B) band, L4 becomes the primary with L3 and L2 as secondary (L6 and L5 shorted out). In the "Short wave" (C) band, L3 becomes the primary with L2 as secondary (L6, L5, L4, and tap on L4 shorted out). The tap on L4 is provided to prevent interaction with L3 and L2 when operating receiver in "Short wave" band. This method of switching reduces the total number of coils and leads, and results in having a low-loss primary and secondary winding for each band with high efficiency of operation.

The band switching of the detector circuits is similar to that of the antenna circuits. Coils L11 and L16 are always connected in series with the plate circuit of the RCA-6K7 r-f amplifier tube. In the "Long wave" (X) band, L15, L14, L13, and L12 are connected in series as the secondary circuit. The ground of the coil system is now at the low end of L15. L16 acts as the primary which transfers energy to the secondary L15. Capacitor C14 resonates primary L16 at the proper frequency. In the "Standard broadcast" (A) band L14, L13, and L12 are connected in series as the secondary circuit. The ground of the coil system is now between L15 and L14. L15 is used as the primary and is resonated at the proper frequency by capacitors C28 and C29 which are in shunt with this coil. Capacitor C24 is connected to transfer energy to the primary coil L15. In the "Medium wave" (B) band, L13 and L12 are connected in series as the secondary. The ground of the coil system is now between L14 and L13. L14 is used as the primary and is resonated at the proper frequency by capacitor C29 which is in shunt with this coil. L15 is shorted by the range selector. Capacitor C24 transfers the r-f energy from the plate circuit to the primary L14. In the "Short wave" (C) band, L12 is the secondary. The ground of the coil system is now between L13 and L12. L13 is used as the primary and is resonated to the proper frequency by capacitor C29. In addition, L11 acts as a high-frequency primary which resonates at about 20 mc and improves the gain at the high-frequency end of the "Short wave" band. Coils L15 and L14 are shorted by the range selector.

Separate windings are employed in the oscillator stage for each position of the range selector. The inherent stability of this circuit provides minimum frequency drift which is especially advantageous for high frequency reception. The locally generated signal is capacitance coupled to control grid No. 2 of the RCA 6L7 first detector.

I-F Amplifier

The intermediate-frequency amplifier consists of an RCA-6K7 in a transformer-coupled circuit. The windings of these transformers are resonated with fixed capacitors, and are adjusted by molded magnetite cores (both primary and secondary) to tune to 460 kc.

Detector and A.V.C.

The modulated signal as obtained from the output of the r-f stage is detected by an RCA-6H6 twin-diode tube. The audio frequency secured by this process is transferred to the a-f system for amplification and final reproduction. The d-c voltage which results from detection of the signal is used for automatic volume control. This voltage which develops across resistors P-11 and R12, is applied as automatic control grid bias to the r-f, first-detector, and i-f tubes. The other (auxiliary) diode of the RCA-6H6 is used to supply residual bias to the controlled tubes under conditions of little or no signal. This diode, under such conditions, draws current which flows through resistors R10, R11, and R12, thereby maintaining the desired operating bias on such tubes. On application of signal energy above a certain level, however, the auxiliary heat-diode ceases to draw current and the a.v.c. diode takes over the biasing function.

Audio System

The manual volume control consists of an acoustically tapered potentiometer in the audio circuit between the output of the detector diode and the input grid of the RCA-6F8 audio voltage-amplifier tube. This control has a two-point tone-compensating filter connected to it so that the correct aural balance will be obtained at different volume settings. Phonograph terminals are provided to feed the output of an external phonograph pickup to the control grid of the audio amplifier through this aurally compensated volume control.

The output of the voltage amplifier is resistance-capacitance coupled to the control grid of the RCA-6F6 power-output tube. The output of this stage is transformer coupled to the voice coil of the electrodynamic speaker.

The "Music-speech" control consists of a switch S4 which, in the "Speech" position, places an additional capacitor C45 in shunt with the capacitor C44 in one of the tone compensating filters. This reduces the low-frequency response of the amplifier and provides maximum intelligibility of the voice frequencies.

Continuously variable tone control is effected by means of capacitor C48 and variable resistor R19 shunting the plate circuit of the output tube.

"Magic Eye"

An RCA-6E7 cathode-ray tuning tube is used as a means of visually indicating when the receiver is accurately tuned to the incoming signal. This tube consists of an amplifier section and a cathode-ray section built in the same glass envelope. A portion of the signal voltage developed across resistor R12 is used to actuate the grid of the amplifier section. Maximum voltage is applied to this grid when the receiver is tuned to resonance with an incoming carrier. This condition is evidenced by the minimum width of the dark sector on the fluorescent screen.

SERVICE DATA

The various diagrams in this booklet contain such information as will be needed to locate causes for defective operation if such develops. The values of the various resistors, capacitors, coils, etc., are indicated adjacent to the symbols signifying these parts on the diagram. Identification tables, such as C1, L2, R1, etc., are provided for reference between the illustrations and the Replacement Parts List. The coils, reactors, and transformer windings are rated in terms of their d-c resistance only. Resistance values of less than one ohm are generally omitted.

Alignment Procedure

There are fourteen adjustments required for the alignment of the oscillator, first-detector, and antenna-tuned circuits; one adjustment for the wave-trap; and four adjustments for the i-f system. Twelve of these adjustments are made with plunger-type air trimming capacitors and require the use of an RCA Stock No. 12636 Adjusting Tool. Each of these capacitors has a lock nut for securing the plunger in place after adjustment. The remaining seven adjustments are made by means of screws attached to molded magnetite cores. These cores change the inductance of the particular coils in which they are inserted to provide exact alignment. All of these adjustments are accurately made during manufacture and should remain in proper alignment unless affected by abnormal conditions of climate or purported alterations for servicing, or unless altered by other means. Loss of sensitivity, improper tone quality, and poor selectivity are the usual indications of improper alignment. Such conditions will usually exist simultaneously. Correct performance of this receiver can only be obtained when these adjustments have been made by a skilled service engineer with the use of adequate and reliable test equipment. The manufacturer of this receiver has such test equipment available for sale through its distributors and dealers.

This receiver requires a more or less involved method of alignment. However, if the following directions are carefully applied in the sequence given, normal performance of the instrument will be obtained.

The plunger-type air trimming capacitors have their approximate plunger settings tabulated on figure 1. If the plungers have been disturbed from their original adjustments, they may be roughly set to the specified dimensions prior to alignment.

In performing services on the oscillator, detector, and r-f circuits, the leads should be restored to their original positions, since the lead-dress is important for proper operation and dial calibration.

Preceding Dressing of Leads Prior to Alignment
Refer to Figure 10

Band "X"

1. Keep blue lead X of S1 to antenna coil L6-1 dressed away from chassis, and from yellow lead of S1 to antenna coil L6-2.
2. Keep blue lead X of S1 to detector coil L14-14 clear of chassis, coil shield, can, and other leads.
3. Keep bus lead C5 to X of S1 apart from bus lead C8 to A of S1, and from chassis.

Band "A"

1. Keep green lead, terminal of S1 to antenna coil tap L-4, away from chassis, coil shield, and coil.
2. Keep bus lead C6 to A of S1 apart from bus lead C5 to X of S1, and from chassis.

Band "C"

Lead from C18 to oscillator coil L7 should be maintained as short and straight as possible.

For alignment, the test-oscillator frequency should be quite accurate. A convenient and reliable means of accurately checking the frequency of test oscillators, receivers, etc., is the RCA Stock No. 9572 Crystal Calibrator.

If the test-oscillator signal cannot be heard as the receiver (heterodyne) oscillator air-trimmer plunger is changed from its minimum-capacity to maximum-capacity position (receiver dial and test oscillator at the specified frequencies, and the correct oscillator air-trimmer used) it may be an indication that the test-oscillator frequency is outside the range covered by the air-trimmer. Under such conditions, when a more accurate setting of the test oscillator cannot be determined, set the oscillator air-trimmer plungers to the approximate settings given on figure 1. Tune the test oscillator until the signal is heard in the speaker. Each of two test-oscillator settings (the fundamentals or the harmonics of which are 930 kc up or) produce a signal. The lower-frequency test oscillator setting should be used as this places the test oscillator (signal) frequency 460 kc below the frequency of the receiver heterodyne oscillator.

Holes are provided in the top of the r-f and antenna coil cans on some models to enable a tuning check with the RCA Stock No. 6479 Tuning Wand. The hole in the top of the detector coil can has a cinch button which must be removed before insertion of the tuning wand. When the brass end of the wand is inserted in the coil, the inductance of the coil is decreased. If this results in an increase of output, the respective air-trimmer capacitance should be decreased (plunger pulled out). If inserting the iron end of the tuning wand causes an increase in output, resulting from an increase of inductance of the coil, the respective air trimmer capacitance should be increased (plunger pushed in). If the range of the air trimmer is not sufficient to give the desired results, the lead-dress may be changed in the paracular circuit being aligned so as to cause the circuit to resonate within the range of the trimmer. An increase in the capacity-to-ground of the circuit will be required if the iron end of the tuning wand causes an increase of signal output when the air-trimmer plunger is full-in, while a decrease in the capacity-to-ground will be required if the brass end of the tuning wand causes an increase in signal output when the air-trimmer plunger is full-out.

Two methods of alignment are applicable—one requires use of the cathode-ray oscillograph, and the other requires a voltmeter or glow-type indicator. The cathode-ray alignment method is advantageous in that the indication provided is in the form of a wave-image which represents the resonance characteristics of the circuit being tuned. This type of alignment is possible through use of apparatus such as the RCA Stock No. 9558 Frequency Modulator and the RCA Stock No. 9343 Cathode-Ray Oscillograph. The output-indicator method should be performed with an instrument such as the RCA Stock No. 4317 Neon Glow Indicator. Either of these methods require the use of a reliable test oscillator such as the RCA Stock No. 9595. Both of these procedures are outlined below.

Cathode-Ray Alignment

Make alignment apparatus connections shown on figure 4. Remove the plug of the frequency-modulator cable from the test-oscillator jack. Connect the receiver chassis to a good external ground. Connect oscillograph "Vertical" input terminals as indicated on figure 3. Set oscillograph power switch to "On" and adjust "Intensity" and "Focus" controls to give a clearly defined spot, or line, on the screen. Set oscillograph "Ampl. A" switch to "On," "Vertical gain" control full-clockwise, "Ampl. B" switch to "Timing," "Range" switch to No. 2 position, and "Timing" switch to "Int." Place the "Sync." control, "Freq." control, and "Horizontal gain" control to about their mid-positions. For each of the following adjustments, the test-oscillator output must be regulated so that the image obtained on the oscillograph screen will be of the minimum size for accurate observation. The receiver volume-control setting is optional.

I-F Adjustments

(a) Connect the "Ant." output of the test oscillator to the grid cap of RCA-6K7 r-f tube (with grid lead in place) through a .001-mfd. capacitor, with "Gnd." to receiver chassis. Tune the test oscillator to 460 kc and place its modulation switch to "On" and its switch to "Hi."

(b) Turn on the receiver and test oscillator. Increase the output of the test oscillator until a deflection is noticeable on the oscillograph screen. The figures obtained represent several waves of the detected signal, the amplitude of which may be observed as an indication of output. Cause the wave-image formed (400-cycle waves) to be spread completely across the screen by adjusting the "Horizontal gain" control. The image should be synchronized to make the pattern motionless by adjusting the "Sync." and "Freq." controls.

(c) Adjust the two magnetite core screws L20 and L19 (see figures 1 and 7) of the second i-f transformer (one on top and one on bottom) to produce maximum vertical deflection of the oscillographic image. This adjustment places the transformer in exact resonance with the 460-kc signal.

(d) The sweeping operation should follow using the frequency modulator. Shift the oscillograph "Timing" switch to "Ext." Insert plug of frequency modulator cable in test-oscillator jack. Turn the test-oscillator modulation switch to "Off." Turn on the frequency modulator and place its sweep-range switch to "Hi."

(e) Increase the frequency of the test oscillator by slowly turning its tuning control until two separate, distinct, and similar waves appear on the screen. If only one wave appears, increase the "Freq." control on the oscillograph to obtain two waves. These waves will be identical in shape, totally disconnected, and appear in reversed positions. They will have a common base line, which is discontinuous. Adjust the "Freq." and "Sync." controls of the oscillograph to make them remain motionless on the screen. Continue increasing the test-oscillator frequency until these forward and reverse curves move together and overlap with their highest points exactly coincident. This condition will be obtained at a test-oscillator setting of approximately 575 kc.

(f) With the images established as in (e), re-adjust the two magnetite core screws L20 and L19 on the second i-f transformer so that they cause the curves on the oscillograph screen to become exactly coincident throughout their lengths and have maximum amplitude.

(g) Without altering the adjustments of the apparatus, shift the "Ant." output of the test oscillator to the input of the r-f system, i.e., to the RCA-6L7 first detector grid cap, through a .001-mfd. capacitor (with grid lead in place). Regulate the test-oscillator output so that the amplitude of the oscillographic image is approximately the same as used for adjustment (f) above.

(h) The two first i-f transformer magnetite core screws L18 and L17 (one on top and one on bottom) should then be adjusted so that they cause the forward and reverse curves to become coincident throughout their lengths and have maximum amplitude. The composite wave obtained in this manner is the most accurate characteristic of the tuned i-f system. Lack of symmetry or irregularity of the resultant image will indicate the presence of a defect in the i-f system.

R-F Adjustments

Make receiver dial adjustments as outlined by "Tel-vetor dial," figure 9. Alignment must be made in sequence of "Wave-trap," "Short wave" band, "Medium wave" band, "Standard broadcast" band, and "Long wave" band.

"Wave-Trap" Adjustment

(a) Connect the output of the test oscillator to the antenna terminal "A1" through a 200-mmfd. (impedance) capacitor. Remove the plug of the frequency-modulator cable from the test-oscillator jack. Turn test-oscillator modulation switch to "On." Shift the oscillograph "Timing" switch to "Int." Place receiver range selector in "Standard broadcast" position. Set the receiver dial to a position of no extraneous signals near 600 kc. Tune the test oscillator to 460 kc. Adjust the wave-trap magnetite core screw L1 to the point which causes minimum amplitude of output (maximum suppression of signal) as shown by the waves on the oscillograph. An increase of the test-oscillator output may be necessary before this point of minimum amplitude, obtained by correct adjustment of wave-trap screw, becomes apparent on oscillograph screen.

"Short Wave" Band

(b) Connect the "Ant." output of the test oscillator to the antenna terminal "A1" of the receiver through a 300-ohm resistor. Set the receiver range selector to its "Short wave" position and its dial pointer to 20,000 kc. Adjust the test oscillator to 20,000 kc. Adjust oscillator air-trimmer C11 until maximum (peak) output is reached. Two peaks may be found with this circuit. The peak with minimum capacitance (plunger near in) should be used. Tighten lock nut. Adjust detector air-trimmer C28 until maximum (peak) output is reached, while slightly rocking the gang tuning condenser back and forth through the signal. Two peaks may be found, with this circuit. The peak with maximum capacitance (plunger near in) should be used. Tighten lock nut. Adjust antenna air-trimmer C8 until maximum (peak) output is reached while slightly rocking the gang tuning condenser back and forth through the signal. Two peaks may be found with this circuit. The peak with maximum capacitance (plunger near in) should be used. Tighten lock nut. Check the image frequency by changing the receiver dial setting to 19,080 kc. The image signal should be received at this position indicating that the adjustment of C11 has been correctly made. No adjustments should be made while checking for the image signal.

"Medium Wave" Band

(c) Place receiver range selector to its "Medium wave" position with its dial pointer set to 6,000 kc. Tune the test oscillator to 6,000 kc. Adjust oscillator air-trimmer C12 to produce maximum (peak) output as shown by the waves on the oscillograph. Two peaks may be found with this circuit. The peak with minimum capacitance (plunger near out) should be used. Tighten lock nut. Adjust the detector air-trimmer C27 for maximum (peak) output while slightly rocking the gang tuning condenser back and forth through the signal. Two peaks may be found with this circuit. The peak with maximum capacitance (plunger near in) should be used. Tighten lock nut. Adjust antenna air-trimmer C7 to produce maximum (peak) output. Tighten lock nut.

"Standard Broadcast" Band

(d) Remove the 300-ohm resistor from between the test-oscillator "Ant." post and receiver antenna terminal "A1" and insert a 200-mmfd. capacitor in its place. Place receiver range selector to "Standard broadcast" position with receiver dial pointer set to 600 kc. Tune the test oscillator to 600 kc. Adjust oscillator magnetite core screw L9 (top of large oscillator coil can) for maximum (peak) output as shown by the waves on the oscillograph screen.

(e) Set receiver dial pointer to 1,500 kc. Tune test oscillator to 1,500 kc (1,500-5,100-kc range) and increase its output to produce a registration on the oscillograph screen. Carefully adjust the oscillator, detector, and antenna air-trimmers C10, C26, and C4, respectively, to produce maximum (peak) output as shown by the waves on the oscillograph screen. Shift the oscillograph "Timing" switch to "Ext." Place the frequency modulator sweep-range switch to its "Lo" position and insert plug of the frequency-modulator cable in test-oscillator jack. Turn test-oscillator modulation switch to "Off." Re-tune the test oscillator (increase frequency) until the forward and reverse waves show on the oscillograph screen and become coincident at their highest points. This will occur at a test-oscillator setting of approximately 1,680 kc. Adjust trimmers C10, C26, and C6 again, setting each to the point which produces the best coincidence and maximum amplitude of the images.

(f) Remove the plug of the frequency-modulator cable from the test-oscillator jack. Turn test-oscillator modulation switch to "On." Set oscillograph "Timing" switch to "Int." Tune test oscillator to 200 kc (200-400-kc range). Tune receiver for maximum response to this signal at a dial reading of approximately 600 kc. The third harmonic of the 200-kc signal is used for this adjustment. Shift oscillograph "Timing" switch to "Ext." Insert the plug of the frequency-modulator cable in test oscillator jack. Turn test-oscillator modulation switch to "Off." Re-tune the test oscillator (increase frequency) until the forward and reverse waves show on the oscillograph screen. This will occur at a test-oscillator setting of approximately 230 kc. Disregarding the fact that the two images may or may not come together, adjust the oscillator magnetite core screw L9 (top of large oscillator coil can) to produce

Radiation Cathode Current Readings
Measured with Milliammeter Connected in Tube Socket Cathode Terminals under Consideration Similar to Those of Voltage Measurements

(1) RCA-6K7—R-F	7.3 ma.
(2) RCA-6J7—Osc	3.4 ma.
(3) RCA-6L7—1st Det	6.4 ma.
(4) RCA-6K7—I-F	7.3 ma.
(5) RCA-6N6—2nd Det.-A.V.C	—
(6) RCA-6F5—A-F	0.3 ma.
(7) RCA-6F6—Power	34.1 ma.
(8) RCA-5Z4—Rect.	72 ma.*
(9) RCA-6E5—Eye	3.0 ma.

(*Cannot be measured in socket)

©John F. Rider, Publisher

MODEL 9K
Alignment, Part 2
Data, Parts List

RCA MFG. CO., INC.

maximum (peak) amplitude of the images. Shift the oscillograph "Timing" switch to "Int." Remove the plug of the frequency-modulator cable from the test-oscillator jack. Turn the test-oscillator modulation switch to "On." Repeat adjustments in (e) above to compensate for any changes caused by the adjustment of L9 core, tightening lock nuts on C10, C26, and C6, respectively, after each is adjusted.

"Long Wave" Band

(g) Shift the oscillograph "Timing" switch to "Int." Remove the plug of the frequency-modulator cable from the test-oscillator jack. Turn the test-oscillator modulation switch to "On." Place receiver range selector to its "Long wave" position. Set the receiver dial pointer to 175 kc. Tune the test oscillator to 175 kc and increase its output until a deflection is noticeable on the oscillograph screen. Adjust oscillator magnetite core screw L10 (located on top of small oscillator coil can) so that maximum (peak) amplitude of output is shown on the oscillograph screen.

(h) Set receiver dial pointer to 350 kc. Tune test oscillator to 350 kc. Adjust the oscillator, detector, and antenna air-trimmers C16, C25, and C5 to produce maximum (peak) output as shown by the waves on the oscillograph screen. Without disturbing the connections, shift the oscillograph "Timing" switch to "Ext." Place the frequency-modulator sweep-range switch to its "Hi" position and insert plug of frequency-modulator cable in test-oscillator jack. Turn test-oscillator modulation switch to "Off." Re-tune the test oscillator (decrease frequency) until the forward and reverse waves show on the oscillograph screen and become coincident at their highest points. This will occur at a test oscillator setting of approximately 190 kc. This setting places the test-oscillator frequency to 175 kc. The second harmonic is now used for the 350 kc adjustment. Adjust air-trimmers C16, C25, and C5, again, to produce maximum amplitude of the images and best coincidence throughout their lengths.

(i) Re-tune the receiver to approximately 175 kc so that the forward and reverse waves appear on the oscillograph screen. Adjust the oscillator magnetite core screw L10 to produce maximum (peak) amplitude of the waves, disregarding the fact that the two images may or may not come together.

(j) Shift the receiver dial setting to 350 kc without altering any other adjustments (frequency modulator still in operation). Adjust air-trimmers C16, C25, and C5, respectively, to produce maximum amplitude and best coincidence of the waves. These adjustments compensate for any changes caused by the adjustment of the magnetite core screw L10. Tighten lock nuts on C16, C25, and C5, respectively, after each is adjusted.

Output Indicator Alignment

Attach the output indicator across the loudspeaker voice-coil circuit. Advance the receiver "Volume" control to its maximum position, letting it remain in such position for all adjustments. For each adjusting operation, regulate the test-oscillator output so that the signal level is as low as possible and still be observable at the receiver output. Use of such small signal will obviate broadness of tuning which would otherwise result from a v-c action on a stronger one.

I-F Adjustments

(a) Connect the "Ant." output of the test oscillator to the grid cap of the RCA 6L7 first detector tube (with grid lead in place) through a .001-mfd. capacitor, with "Gnd." to receiver chassis. Tune the test oscillator to 460 kc. Place its modulation switch to "On" and its output switch to "Hi."

(b) Adjust the two magnetite core screws L20 and L19 (see figures 1 and 7) of the second i-f transformer to produce maximum (peak) output.

(c) Adjust the two first i-f transformer magnetite core screws L18 and L17 to produce maximum (peak) output. It is advisable to repeat the adjustment of all i-f magnetite core screws to assure that the interaction between them has not disturbed the original adjustments.

R-F Adjustments

Make receiver dial adjustments as outlined by "Selector dial," figure 9. Alignment must be made in sequence of "Wave-trap," "Short wave" band, "Medium wave" band, "Standard broadcast" band, and "Long wave" band.

"Wave-Trap" Adjustment

(a) Connect the "Ant." output of the test oscillator to the antenna terminal "A1" on the receiver through a 200-mmfd. (important) capacitor. Place the receiver range selector to its "Standard broadcast" position and set the dial pointer to a position of no extraneous signals near 600 kc. Tune the test oscillator to 460 kc. Adjust the wave-trap magnetite core screw L1 to the point which causes minimum output (maximum suppression of signal). An increase of the test-oscillator output may be necessary before the point of minimum output, obtained by adjustment of wave-trap screw, becomes apparent on the output indicator.

"Short Wave" Band

(b) Connect the "Ant." output of the test oscillator to the antenna terminal "A1" through a 300-ohm resistor. Set the receiver range selector to its "Short wave" position and its dial pointer to 20,000 kc. Adjust the test oscillator to 20,000 kc. Adjust oscillator air-trimmer C11 until maximum (peak) output is reached. Two peaks may be found with this circuit. The peak with minimum capacitance (plunger near out) should be used. Tighten lock nut. Adjust detector air-trimmer C28 until maximum (peak) output is reached, while slightly rocking the gang tuning condenser back and forth through the signal. Two peaks may be found with this circuit. The peak with maximum capacitance (plunger near in) should be used. Tighten lock nut. Adjust antenna air-trimmer C8 until maximum (peak) output is reached, while slightly rocking the gang tuning condenser back and forth through the signal. Two peaks may be found with this circuit. The peak with maximum capacitance (plunger near in) should be used. Tighten lock nut. Adjust antenna air-trimmer C7 to produce maximum (peak) output. Tighten lock nut.

"Medium Wave" Band

(c) Place receiver range selector to its "Medium wave" position with the receiver dial pointer set to 6,000 kc. Tune the test oscillator to 6,000 kc. Adjust oscillator air-trimmer C12 to produce maximum (peak) output. Two peaks may be found with this circuit. The peak with minimum capacitance (plunger near out) should be used. Tighten lock nut. Adjust the detector air-trimmer C27 for maximum (peak) output while slightly rocking the receiver gang tuning condenser back and forth through the signal. Two peaks may be found with this circuit. The peak with maximum capacitance (plunger near in) should be used. Tighten lock nut. Adjust antenna air-trimmer C7 to produce maximum (peak) output. Tighten lock nut.

"Standard Broadcast" Band

(d) Remove the 300-ohm resistor from between the test-oscillator "Ant." post and receiver antenna terminal "A1" and insert a 200-mmfd. capacitor in its place. Place receiver range selector to its "Standard broadcast" position with the receiver dial pointer set to 600 kc. Tune the test oscillator to 600 kc. Adjust the oscillator magnetite core screw L9 (top of large oscillator coil can) for maximum (peak) output.

(e) Set receiver dial pointer to 1,500 kc. Tune test oscillator to 1,500 kc and regulate its output until a slight indication of output is visible. Carefully adjust the oscillator, detector, and antenna air-trimmers C10, C26, and C6, respectively, to produce maximum (peak) output.

(f) Tune test oscillator to 600 kc. Tune the receiver to pick up this signal near 600 kc, disregarding the dial reading at which it is best received. Adjust oscillator magnetite core screw L9 (top of large oscillator coil can) for maximum (peak) output while slightly rocking the gang tuning condenser back and forth through the signal. Repeat adjustments in (e) above to compensate for any change caused by adjustment of L9 magnetite core screw, tightening lock nuts on C10, C26, and C6, respectively, after each is adjusted.

"Long Wave" Band

(g) Place receiver range selector to its "Long wave" position, with dial pointer set to 175 kc. Tune the test oscillator to 175 kc and increase its output until a slight indication of output is visible. Adjust oscillator magnetite core screw L10 (top of small oscillator coil can) for maximum (peak) output.

(h) Set receiver dial pointer to 350 kc. Tune test oscillator to 350 kc. Adjust the oscillator, detector, and antenna air-trimmers C16, C25, and C5, respectively, to produce maximum (peak) output.

(i) Tune test oscillator to 175 kc. Tune receiver to pick up this signal near 175 kc, disregarding the dial reading at which it is best received. Adjust oscillator magnetite core screw L10 (top of small oscillator coil can) for maximum (peak) output while slightly rocking the gang tuning condenser back and forth through the signal. Repeat adjustements in (h) above to compensate for any changes caused by the adjustment of the magnetite core screw L10. Tighten lock nuts on C16, C25, and C5, respectively, after each is adjusted.

Selector Dial

Figure 9 illustrates the relation of the various parts of the dial mechanism when in its "Standard broadcast" position with the range switch likewise turned to its "Standard broadcast" position. In re-assembling the dial after repairs, see that the gears are meshed in accordance with the diagram, at the same time noting that the range switch is in its "Standard broadcast" position and the lever attached to the range-switch shaft placed in the position shown.

To adjust the dial mechanism, set the range switch to its "Standard broadcast" position. Place a straight-edge across the center of the dial so that its edge is even with the lower (end) marking at both the low-frequency and high-frequency ends of the dial. Under such conditions the straight-edge should be parallel with the top of the chassis base. If the straight-edge is not parallel with the top of the chassis base, loosen the nut on the end of the roller link pivot stud and move the stud up or down until the link roller moves the dial to the desired position so that the end calibration marks obtain the position mentioned above. Tighten the nut on the roller link pivot stud.

Set the gang tuning condenser to its maximum capacity position. Adjust the dial pointer to the low-frequency (end) mark on "Standard broadcast" scale. This is a friction adjustment.

With the gang tuning condenser plates still in full mesh, loosen the two set screws on the vernier-dial hub. Rotate the vernier dial until the "0" marking is in a vertical plane above the center of the shaft. Tighten set screws.

Phonograph Terminal Board

A terminal board is provided for connecting a phonograph into the audio amplifying circuit. Typical methods of connecting a low-impedance pickup, or the RCA Victor Models R-93, R-93-2, and R-93-8 Record Players are shown on the Schematic Diagram (figure 2).

Antenna and Ground Terminals

These receivers are equipped with an antenna-ground terminal board having three terminals. These terminals are marked "A2," "A1," and "G," the latter being the ground terminal and should always be connected to a good external ground. The transmission-line leads of the RCA RK-40A antenna system should be connected to terminals "A2" and "A1." The receiver coupling units of the RCA RK-40 and the RCA Spider-Web antenna systems should be connected to terminals "A1" and "G." Connect a single-wire antenna to terminal "A1."

Loudspeaker

Centering of the loudspeaker voice coil is made in the usual manner with three narrow paper feelers after first removing the front paper dust cover. This may be removed by softening its cement with a very light application of acetone using care not to allow the acetone to flow down into the air gap. The dust cover should be cemented back in place with ambrol upon completion of adjustment.

RADIOTRON COMPLEMENT

(1)	RCA-6K7 ..... R-F Amplifier	(5)	RCA-6H6 ..... Second Detector and A.V.C.
(2)	RCA-6J7 ..... Oscillator	(6)	RCA-6F5 ..... Audio Voltage Amplifier
(3)	RCA-6L7 ..... First Detector	(7)	RCA-6P6 ..... Power Output
(4)	RCA-6K7 ..... I-F Amplifier	(8)	RCA-1Z4 ..... Full-Wave Rectifier
		(9)	RCA-6E5 ..... Tuning Tube

Pilot Lamps (4) ..... Mazda No. 46, 6.3 volts, 0.25 ampere

POWER SUPPLY RATINGS

Rating A	105-125 volts, 50-60 cycles, 95 watts
Rating B	105-125 volts, 25-60 cycles, 95 watts
Rating C	100/130/140-160/195-250 volts, 40-60 cycles, 95 watts

Mechanical Specifications

Height	40½ inches
Width	27 inches
Depth	14 inches
Weight (net)	76 pounds
Weight (shipping)	86 pounds
Chassis Base Dimensions	14½ inches x 7¾ inches x 3¼ inches
Over-all Height of Chassis	9 inches
Operating Controls	(1) Music-Speech—Power Switch, (2) Volume, (3) Tuning, (4) Range Selector, (5) Tone
Tuning Drive Ratios	20 to 1 and 100 to 1

REPLACEMENT PARTS

Stock No.	Description	List Price
	RECEIVER ASSEMBLIES	
12806	Board—3-contact antenna and ground terminal board	$0.25
12865	Board—4-contact and 2-link phonograph terminal board	.25
12929	Bracket—Mounting bracket for I.F. tone control or volume control	.35
5237	Bushing—Variable condenser mounting bushing assembly—Package of 3	.45
11625	Cable—Tuning lamp cable and socket	1.26
12521	Cap—Grid contact cap—Package of 3	.15
12884	Capacitor—Adjustable trimmer (C16, C25)	.40
12807	Capacitor—Adjustable trimmer (C11, C17, C28)	.35
12714	Capacitor—Adjustable trimmer (C5, C6, C9, C8, C10, C12, C26)	.38
12896	Capacitor—15 Mmfd. (C29)	.20
11722	Capacitor—18 Mmfd. (C9)	.20
12895	Capacitor—56 Mmfd (C17)	.20
12723	Capacitor—56 Mmfd. (C2, C21)	.20
12724	Capacitor—120 Mmfd (C20, C46)	.28
12904	Capacitor—120 Mmfd. (C52, C55, C56, C58)	.26
12725	Capacitor—150 Mmfd (C1)	.28
12894	Capacitor—180 Mmfd (C45)	.20
12906	Capacitor—180 Mmfd (C19)	.28
12727	Capacitor—355 Mmfd (C14)	.20
12537	Capacitor—360 Mmfd (C3, C24, C51)	.20
12729	Capacitor—1,550 Mmfd. (C15)	.26
12938	Capacitor—4,500 Mmfd. (C18)	.26
4838	Capacitor—.005 Mfd. (C49)	.20
4836	Capacitor—.01 Mfd. (C23, C40, C47)	.25
5196	Capacitor—.025 Mfd. (C31)	.25
4836	Capacitor—.05 Mfd. (C37)	.30
11281	Resistor—56,000 ohm, carbon type, 1/10 watt—Package of 5 (R6, R15, R3)	.75
11396	Resistor—120,000 ohm, carbon type, 1/10 watt—Package of 5 (R17)	.75
11453	Resistor—170,000 ohm, carbon type, 1/10 watt—Package of 5 (R17)	.75
11172	Resistor—470,000 ohm, carbon type, ½ watt—Package of 5 (R13)	1.00
11452	Resistor—470,000 ohm, carbon type, 1/10 watt—Package of 5 (R18)	.75
11307	Resistor—560,000 ohm, carbon type, 1/10 watt—Package of 5 (R1, R5)	.75
12013	Resistor—1 Meg., carbon type, 1/10 watt—Package of 5 (R10)	.75
12679	Resistor—2.2 Meg., insulated, ½ watt—Package of 5 (R10)	1.00
12928	Resistor—3.3 Meg., insulated, ½ watt—Package of 5 (R8, R9)	1.00
12927	Resistor—Voltage divider resistor, comprising one 16 ohm, one 75 ohm and one 190 ohm sections (R21, R32, R33)	.35
12715	Resistor—Wire wound resistor, comprising one 10,000 ohm and one 17,000 ohm sections (R4, R7)	.86
4669	Screw—No. 8-32-5/32 set screw for link, Stock No. 12866—Package of 10	.35
3903	Screw—No. 8-32-3/16 headless, cup point set screw for Stock No. 12870—Package of 20	.36
12925	Shaft—Range switch and band indicator operating shaft and hub assembly	.25
12651	Shield—Coil shield for Stock Nos. 12923 and 11924	.21
12710	Shield—Coil shield for Stock No. 12709	.18
12883	Shield—Coil shield for Stock No. 12881	.30
12926	Shield—Chassis end shield and rubber mounting foot assembly—Package of 2	.85
12006	Shield—I. F. transformer shield for Stock Nos. 12652 and 12651	.28
12607	Shield—I. F. transformer shield top for Stock No. 12653	.30
12581	Shield—I. F. transformer shield top for Stock No. 12655	.36
5119	Socket—3-contact female connector for speaker leads	.25
11103	Socket—3-contact XF-4 Radiotron socket	.15
11198	Socket—7-contact 6L7, 6F6A, 6K7 or 6L7 Radiotron socket	.15
11196	Socket—8-contact 6F6 or 6J7 Radiotron socket	.15
11323	Socket—Upper right or lower left hand dial lamp socket	.18
13095	Socket—Upper left or lower right hand dial lamp socket	.25
11181	Socket—Tuning lamp socket and cover	.45
13007	Spring—Retaining spring for core, Stock Nos. 12006, 12664, 12800 and 12882—Package of 10	.36
12920	Switch—Range switch (B1, B2, B3)	2.60
12921	Tone Control—High frequency tone control (R19)	.95
12860	Tone Control—Low frequency tone control and power switch (B4, B5)	1.50
12652	Transformer—First I. F. transformer—pair (L17, L18, C22, C23)	1.60
12918	Transformer—Power transformer, 105-125 volt, 50-60 cycle (T1)	4.30
12857	Transformer—Power transformer, 105-125 volt, 25 cycle (T1)	9.10
12919	Transformer—Power transformer, 100-250 volt, 40-60 cycle (T2)	6.20
12653	Transformer—Second I. F. transformer, complete (L19, L20, C36, C38, C39, R11, R12)	2.06
12654	Trap—Wave trap, complete (L1)	.75
12861	Volume Control (R13)	1.00
12902	Capacitor—0.1 Mfd. (C34, C53)	.22
5170	Capacitor—0.25 Mfd. (C12, C54)	.25
4840	Capacitor—0.25 Mfd. (C42, C43)	.30
5213	Capacitor—1.8 Mfd. (C41)	1.10
12467	Capacitor—10 Mfd. (C30)	1.40
12923	Coil—Antenna coil and shield XABC bands (L2, L3, L4, L5, L6)	1.75
12924	Coil—Detector coil and shield XABC bands (L11, L12, L13, L14, L15, L16)	1.90
12709	Coil—Oscillator coil and shield ABC bands only (L7, L8, L9)	2.02
12881	Coil—Oscillator coil and shield X band only (L10)	.80
12859	Compensator Pack—Comprising two sections 015 Mfd each, one section .1 Mfd. and two resistors 17,000 ohms each (C43, C44, C45, R14, R16)	1.50
12932	Condenser—3-gang variable tuning condenser (C4, C19, C30)	4.15
12664	Core—Adjustable core and stud for Stock No. 12654	.33
12800	Core—Adjustable core and stud for Stock No. 12709	.20
12881	Core—Adjustable core and stud for Stock No. 12881	.30
12006	Core—Adjustable core and stud for Stock Nos. 12652 and 12653	.22
12870	Dial—Vernier dial and dial assembly	.65
5226	Lamp—Dial lamp—6.3 volt—Package of 5	.70
12868	Link—Range switch and band indicator operating link, complete with set screws	.45
5112	Resistor—1,000 ohm, carbon type, ½ watt—Package of 5 (R12)	1.00
	REPRODUCER ASSEMBLIES	
12641	Board—3-contact reproducer terminal board	.35
12640	Bracket—Output transformer mounting bracket and clamp	.18
12012	Coil—Field coil (L23)	1.85
11469	Coil—Neutralizing coil (L25)	.20
12607	Cone—Reproducer cone and dust cup (L21)	1.00
5118	Connector—3-contact male speaker cable connector	.25
9694	Reproducer, complete	6.90
11323	Transformer—Output transformer (T3)	1.36
11886	Washer—Spring washer to hold field coil securely—Package of 3	.30
	DRIVE ASSEMBLIES	
10703	Ball—3/32-inch dia. steel ball for planetary drive—Package of 20	.25
10841	Ball—1/4-inch dia. steel ball for planetary drive bearing—Package of 20	.25
12904	Bushing—Plate and bushing assembly for planetary drive mounting	.30
12905	Coupling—Flexible coupling and shaft assembly, complete	.50
12909	Dial—Band indicating dial and cam assembly	1.05
12899	Drive—Variable tuning condenser drive, complete—including mounting bracket, drive, dial scale and indicator, less vernier dial. Stock No. 13870 and link, Stock No. 12868	4.40
13906	Gear—Anti-lash drive gear, complete	.75
12910	Gear—Sector gear and link assembly for band selector	.30
12908	Indicator—Station selector indicator pointer	.20
8051	Link—Link and roller assembly, complete with spring	.30
12911	Screen—Dial lamp screen and light diffuser	.20
4669	Screw—Set screw for flexible coupling or link Nos. 12905 and 12906—Package of 10	.25
12901	Shaft—Direct drive shaft and pinion gear for planetary drive	.75
12900	Shaft—Vernier drive shaft for planetary drive	.25
11903	Spring—Tension spring for planetary drive bearing—Package of 10	.30
12907	Spring—Tension spring for gear, Stock No. 12906—Package of 10	.30
8052	Spring—Tension spring for link, Stock No. 8051—Package of 5	.32
	MISCELLANEOUS ASSEMBLIES	
11996	Bracket—Tuning lamp mounting bracket and clamp	.23
12666	Cover—Reproducer cover assembly	.65
12915	Cover—Station selector escutcheon and crystal	1.30
12742	Escutcheon—Tuning lamp escutcheon	.23
12699	Knob—Large station selector knob—Package of 5	.88
11547	Knob—Low frequency tone control and power switch, volume control, range switch or high frequency tone control knob—Package of 5	.75
12700	Knob—Small (vernier) station selector knob—Package of 5	.50
11210	Screw—Chassis mounting screw assembly—Package of 4	.28
11349	Spring—Retaining spring for knob, Stock No. 11349 and 13700—Package of 5	.23
4981	Spring—Retaining spring for knob, Stock No. 13699—Package of 10	.30

©John F. Rider, Publisher

©John F. Rider, Publisher

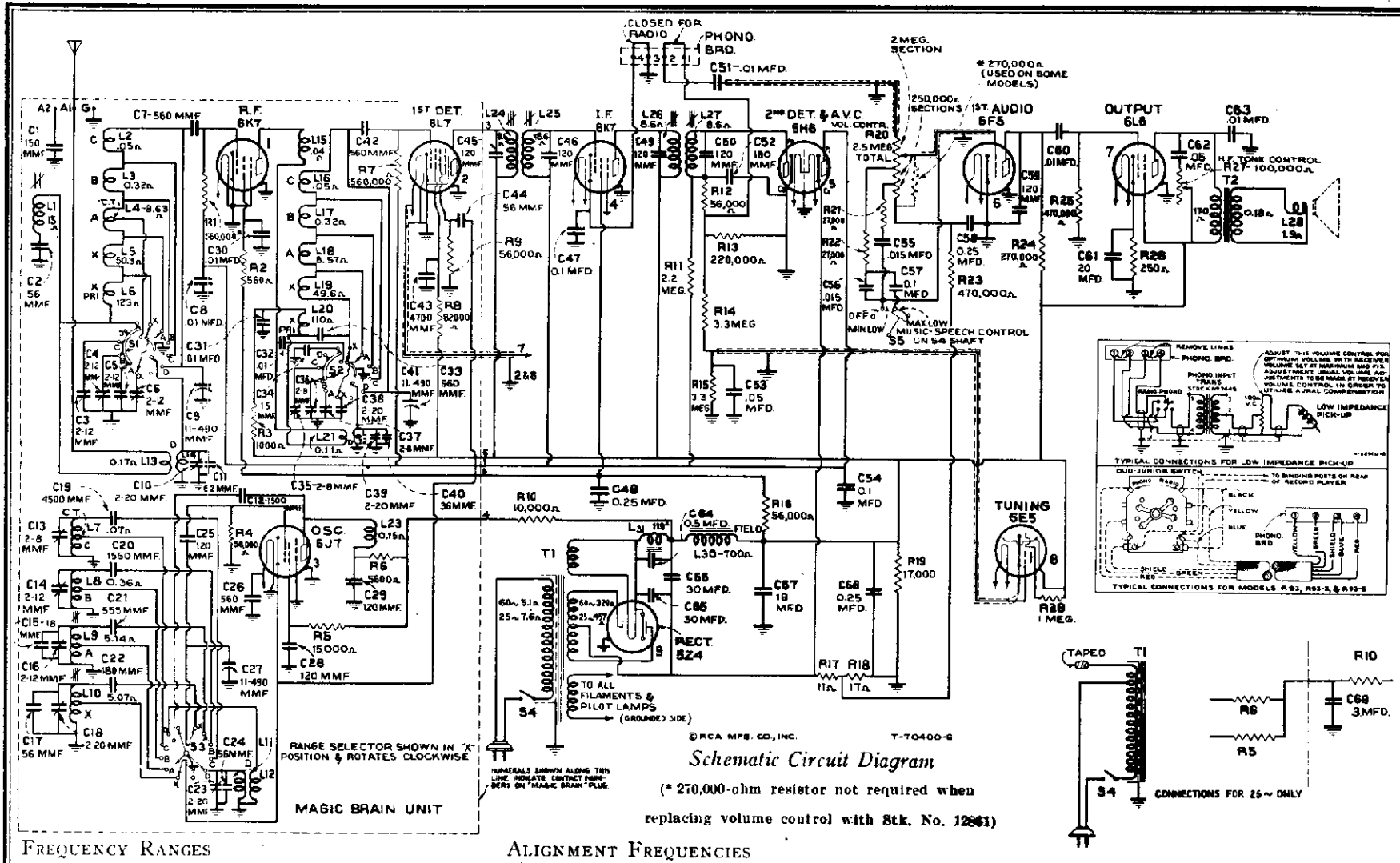

Schematic Circuit Diagram

(* 270,000-ohm resistor not required when replacing volume control with Stk. No. 12661)

Frequency Ranges

"Long Wave" (X)	150-410 kc
"Standard Broadcast" (A)	530-1,800 kc
"Medium Wave" (B)	1,800-6,400 kc
"Short Wave" (C)	6,400-23,000 kc
"Ultra Short Wave" (D)	23,000-60,000 kc
Intermediate Frequency	460 kc

Alignment Frequencies

"Long Wave" (X) ..... 175 kc (osc.), 350 kc (osc., det., ant.)
"Standard Broadcast" (A) ..... 600 kc (osc.), 1,500 kc (osc., det., ant.)
"Medium Wave" (B) .... 6,000 kc (osc., det., ant.)
"Short Wave" (C) ..... 20,000 kc (osc., det., ant.)
"Ultra Short Wave" (D) .. 57,000 kc (osc., det., ant.)

Power Output

Undistorted ..... 5 watts
Maximum ..... 9 watts

Loudspeaker

Type ..... Electrodynamic
Impedance (V.C.) .. 2.2 ohms at 400 cycles

MODELS 9T,9K2
Chassis Wiring

RCA MFG. CO., INC.

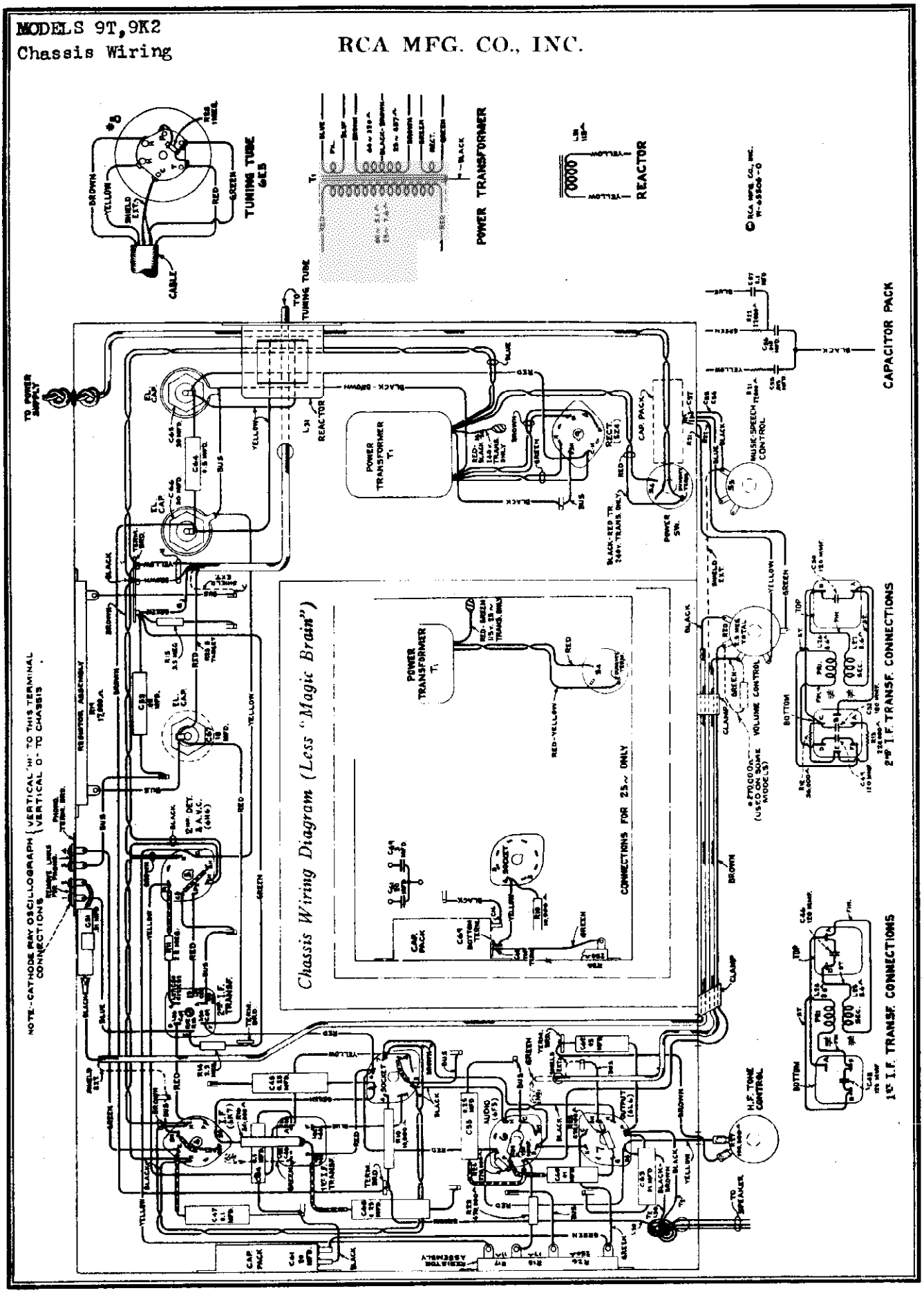

©John F. Rider, Publisher

RCA MFG. CO., INC.

MODELS 9T,9K2
"Magic Brain"
Chassis Wiring

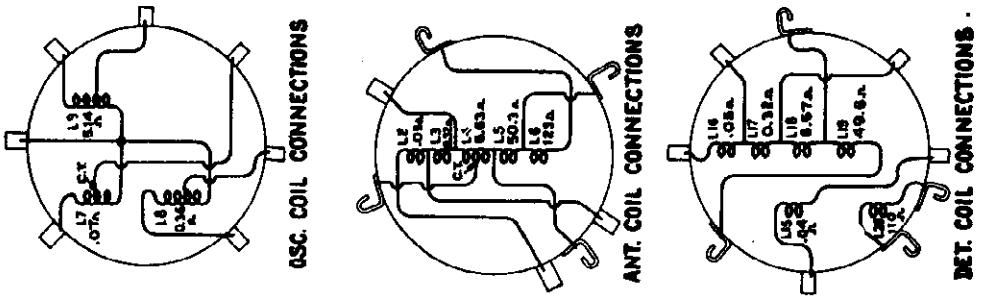

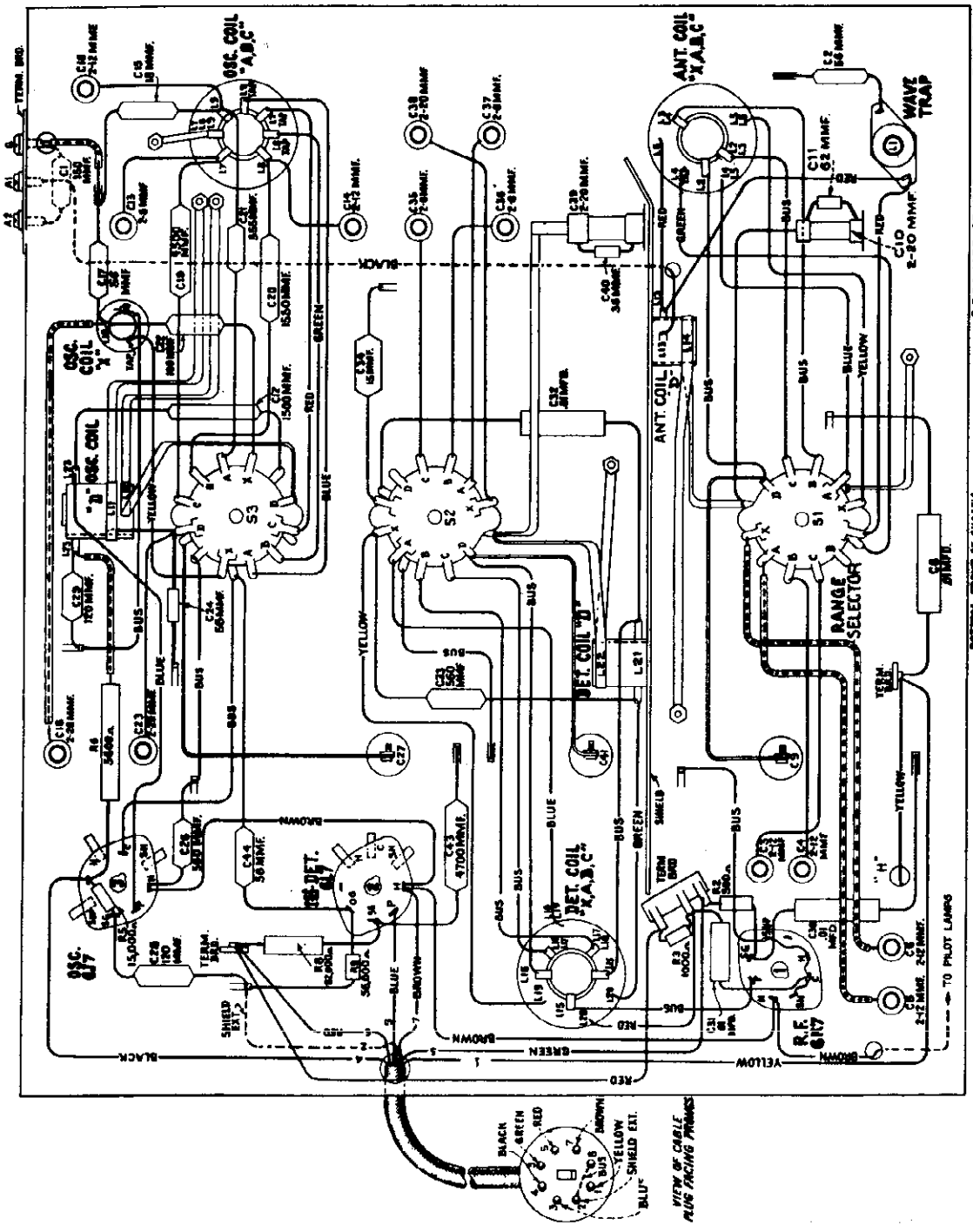

POWER SUPPLY RATINGS

Rating A..... 105-125 volts, 50-60 cycles, 120 watts
Rating B..... 105-125 volts, 25-60 cycles, 120 watts
Rating C..... 100-130/140-160/195-250 volts, 40-60 cycles, 120 watts

"Magic Brain" Wiring Diagram

©John F. Rider, Publisher

MODELS 9T,9K2
Socket,Trimmers
Visual Alignment
Dial Mechanism
Transformer,Speaker

RCA MFG. CO., INC.

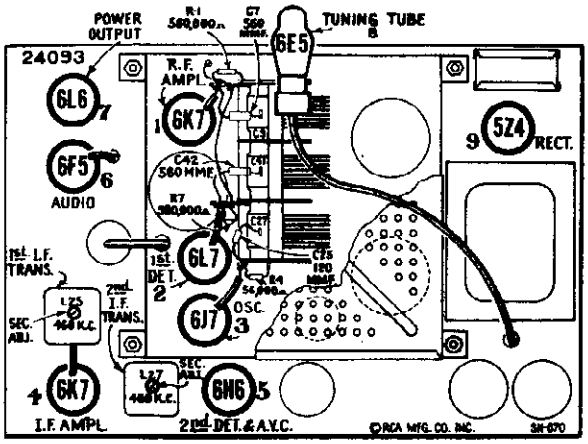

Figure 1—Radiotron and I-F Trimmer Locations

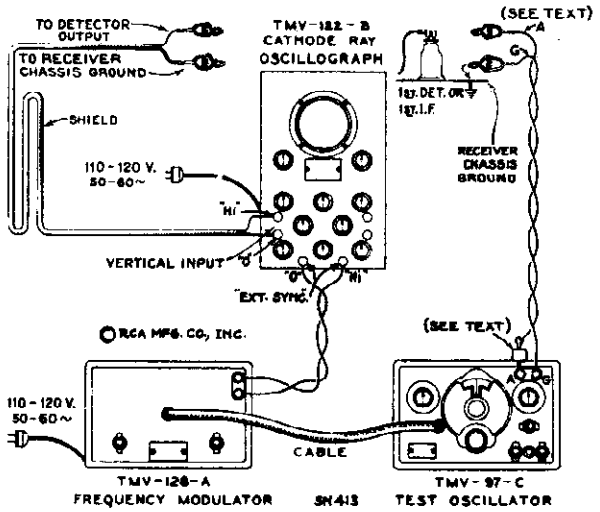

Figure 5—Alignment Apparatus Connections

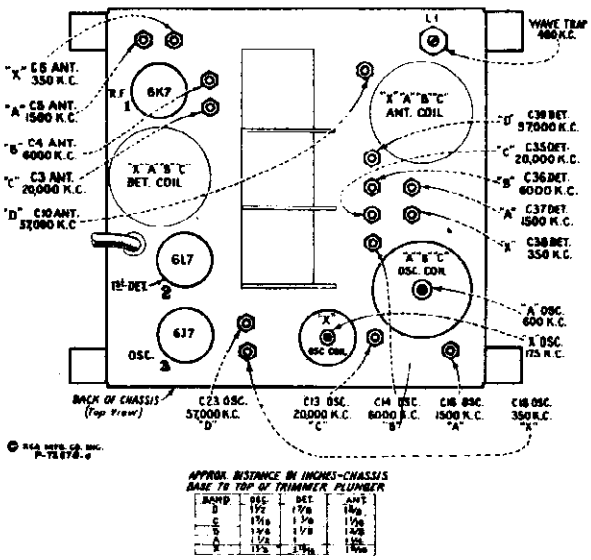

Figure 6—"Magic Brain" Trimmer Locations

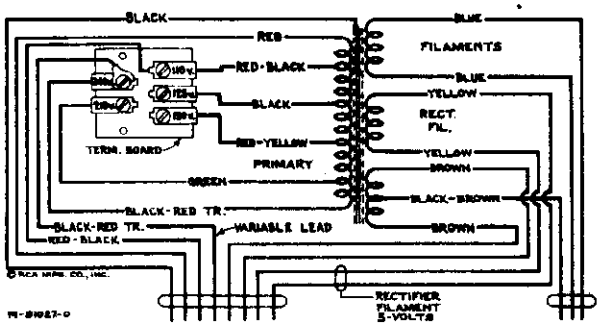

Primary resistance—10.1 ohms total
Secondary resistance—226 ohms total

Figure 9—Universal Transformer

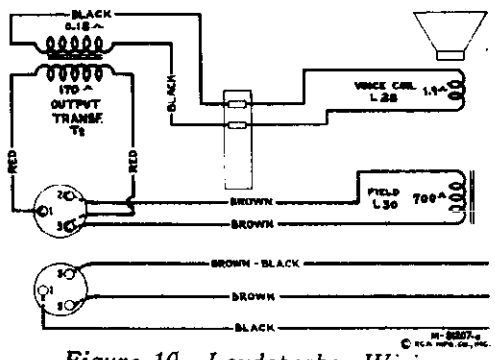

Figure 10—Loudspeaker Wiring

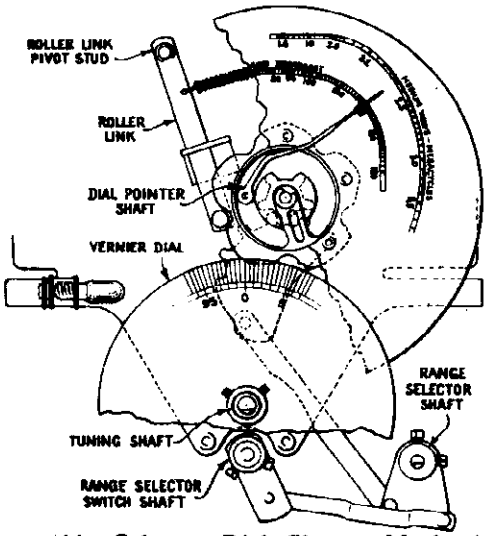

Figure 11—Selector Dial Change Mechanism

©John F. Rider, Publisher

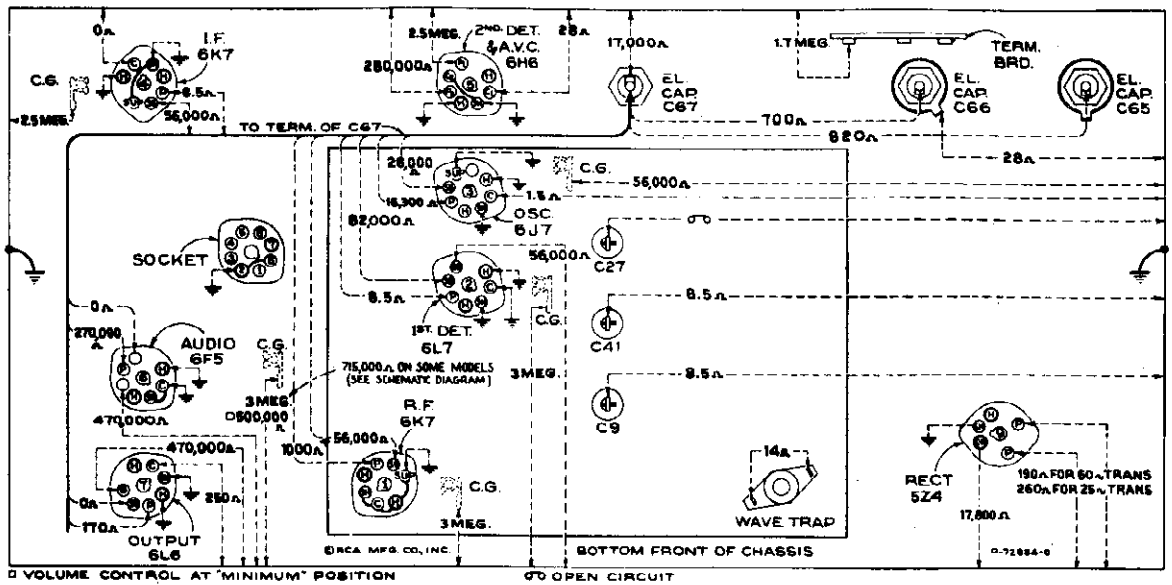

Figure 7—Resistance Diagram

Power supply disconnected—Radiotrons in sockets—Tuning condenser in full-mesh—Range selector in "Standard broadcast" position—Volume control maximum

The resistance values shown between Radiotron socket contacts, grid caps, resistors, and terminals to receiver chassis ground or other pertinent point on figure 7, permit a rapid continuity check of the circuits. The use of this diagram in conjunction with the Schematic Circuit Diagram, figure 2, and Wiring Diagrams, figures 3 and 4, will permit the location of certain troubles which might otherwise be difficult to ascertain. Each value as specified should hold within ± 20%. Variations in excess of this limit will usually be indicative of trouble in circuit under test. In all cases of measuring the resistance between points of the circuit and ground, it will be necessary to connect the negative terminal of the resistance meter to chassis-ground. If the polarity of the resistance meter is not known, it may be readily ascertained by connecting a d-c voltmeter of indicated polarity across the terminals of the device.

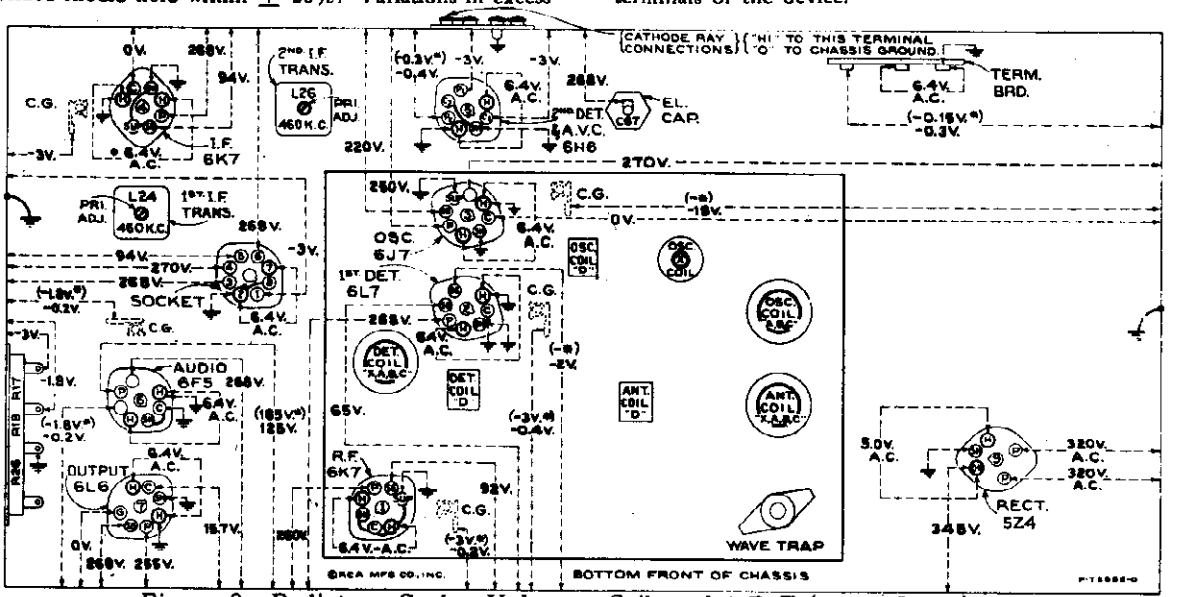

Figure 8—Radiotron Socket Voltages, Coil, and I-F Trimmer Locations

Measured at 115 volts, 60-cycle supply—Tuned to approximately 1,000 kc—No signal being received—Volume control minimum

Note: Two voltage values are shown for some readings. The higher value shown in parenthesis with asterisk (*) indicates operating conditions without voltmeter loading. The lower value is the actual measured voltage and differs from the higher value because of the additional loading of the voltmeter through the high series circuit resistance.

The voltage values indicated from the Radiotron socket contacts, grid caps, resistors, and terminals to receiver chassis ground on figure 8 will assist in locating cause for faulty operation. Each value as specified should hold within ±20% when the receiver is normally operative at its rated line voltage. Variations in excess of this limit will usually be indicative of trouble in the basic circuits. To duplicate the conditions under which the voltages were measured requires a 1,000-ohm-per-volt d-c meter, having ranges of 10, 50, 250, 500, and 1,000 volts. Use the nearest range above the voltage to be measured. A-c voltages were measured with a corresponding a-c meter.

©John F. Rider, Publisher

MODELS 9T,9K2
Circuit Data
Alignment,Part 1

RCA MFG. CO., INC.

Circuit Arrangement

The conventional type of superheterodyne circuit is used. It consists of an r-f amplifier stage, first detector (converter) stage, separate oscillator stage, an i-f amplifier stage, a diode detector—automatic volume-control stage, an audio voltage amplifier stage, a beam-type power-amplifier stage, a tuning indicator "Magic Eye", and a full-wave rectifier.

"Magic Brain"

The new "Magic Brain" is constructed as a separate, self contained, completely shielded, five-band, oscillator-detector-antenna tuning unit which plugs into the main chassis.

A single-wire antenna, or a doublet antenna, when connected to the proper input terminals of the receiver, is coupled to the control grid of the RCA-6K7 r-f amplifier tube through the tuned r-f transformer consisting of L6, L5, L4, L3, and L2 (except when range selector is in "Ultra short wave" position). The primary coil L19 of the "Ultra short wave" (D) band tuned r-f transformer remains in the antenna circuit at all times. A unique method of switching is used. In the "Long wave" (X) band, L6 becomes the primary with L5, L4, L3, and L2 as secondary. In the "Standard broadcast" (A) band, L5 becomes the primary with L4, L3, and L2 as secondary (L6 shorted out). In the "Medium wave" (B) band, L4 becomes the primary with L3 and L2 as secondary (L6 and L5 shorted out). In the "Short wave" (C) band, L3 becomes the primary with L2 as secondary (L6, L5, L4, and tap on L4 shorted out). The tap on L4 is provided to prevent interaction with L3 and L2 when operating receiver in "Short wave" band. In the "Ultra short wave" (D) band, L6, L5, L4, and L3 are shorted out and grounded, and secondary L14 is placed in shunt with L2. The latter connection prevents undesirable interaction of L2 with L14. This method of switching reduces the total number of coils and leads, and results in having a low-loss primary and secondary winding for each band with high efficiency of operation.

The band switching of the detector circuits is similar to that of the antenna circuits. Coils L18, L21, and L20 are always connected in series with the plate circuit of the RCA-6K7 r-f amplifier tube. In the "Long wave" (X) band, L19, L18, L17, and L16 are connected in series as the secondary circuit. The ground of the coil system is at the low end of L19. L20 acts as the primary which transfers energy to the secondary L19. Capacitor C33 resonates primary L20 at the proper frequency. In the "Standard broadcast" (A) band, L18, L17, and L16 are considered in series as the secondary circuit. The ground of the coil system is now between L18 and L19. L19 is used as the primary and is resonated at the proper frequency by capacitors C34 and C35 which are in shunt with this coil. Capacitor C33 is connected to transfer energy to the primary coil L19. In the "Medium wave" (B) band, L17 and L16 are connected in series as the secondary. The ground of the coil system is now between L17 and L18. L18 is used as the primary and is resonated at the proper frequency by capacitor C34 which is in shunt with this coil. L19 is shorted by the range selector. Capacitor C33 transfers the r-f energy from the plate circuit to the primary L18. In the "Short wave" (C) band, L16 is the secondary. The ground of the coil system is now between L16 and L17. L17 is used as the primary and is resonated to the proper frequency by capacitor C34. In addition, L15 acts as a high-frequency primary which resonates above 20 mc and improves the gain at the high-frequency end of the "Short wave" band. Coils L19 and L18 are shorted by the range selector. L21 is effectively r-f bypassed in this position by capacitor C32. In the "Ultra short wave" (D) band, L22 is the secondary, or grid coil, and consists of approximately a single turn of silver plated strap around a 7/8 inch coil form. The primary coils, L21 and L15 are in series on this band, with L21 acting as a low-frequency primary and L17 as a high-frequency primary. L16 is shunted by L22 instead of being shorted directly by the range selector. Any inductive effect of L16 is thus eliminated. L19, L18, and L17 are shorted directly by the range selector.

Separate windings are employed in the oscillator stage for each position of the range selector. The inherent stability of this circuit provides minimum frequency drift which is especially advantageous for high-frequency reception. The locally generated signal is capacitance coupled to control grid No. 2 of the RCA-6L7 first detector.

The output of the "Magic Brain" is fed to the r-f amplifier through the plug-in cable. This cable also supplies all power required by the "Magic Brain" unit.

I-F Amplifier

The intermediate-frequency amplifier consists of an RCA-6K7 in a transformer-coupled circuit. The windings of these transformers are resonated with fixed capacitors, and are adjusted by molded magnetite cores (both primary and secondary) to tune to 460 kc.

Detector and A.V.C.

The modulated signal as obtained from the output of the i-f stage is detected by an RCA-6H6 twin-diode tube. The audio frequency secured by this process is transferred to the r-f system for amplification and final reproduction. The d-c voltage which results from detection of the signal is used for automatic volume control. This voltage, which develops across resistors R12 and R13, is applied as automatic control-grid bias to the first-detector and i-f tubes. The second (auxiliary) diode of the RCA-6H6 is used to supply residual bias to the controlled tubes under conditions of little or no signal. This diode, under such conditions, draws current which flows through resistors R11, R12, and R13, thereby maintaining the desired operating bias on such tubes. On application of signal energy above a certain level, however, the auxiliary bias-diode ceases to draw current and the a.v.c. diode takes over the biasing function.

Audio System

The manual volume control consists of an acoustically tapered potentiometer in the audio circuit between the output of the detector-diode and the input grid of the RCA-6F5 audio voltage-amplifier tube. This control has a two-point tone-compensating filter connected to it so that the correct aural balance will be obtained at different volume settings. Phonograph terminals are provided to feed the output of an external phonograph pickup to the control grid of the audio amplifier through this aurally compensated volume control.

The output of the voltage amplifier is resistance-capacitance coupled to the control grid of the RCA-6L6 power output tube. The output of this stage is transformer coupled to the voice coil of the electrodynamic speaker.

The "Music-speech" control consists of a switch S1 which, in the "Speech" position, places an additional capacitor C57 in shunt with the capacitor C56 in one of the tone compensating filters. This reduces the low-frequency response of the amplifier and provides maximum intelligibility of the voice frequencies.

Continuously variable tone control is effected by means of capacitor C62 and variable resistor R27 shunting the plate circuit of the output tube.

"Magic Eye"

An RCA-6E5 cathode-ray tuning tube is used as a means of visually indicating when the receiver is accurately tuned to the incoming signal. This tube consists of an amplifier section and a cathode-ray section built in the same glass envelope. A portion of the signal voltage developed across resistor R13 is used to actuate the grid of the amplifier section. Maximum voltage is applied to this grid when the receiver is tuned to resonance with an incoming carrier. This condition is evidenced by the maximum width of the dark sector on the fluorescent screen.

"Magic Voice" (Model 9K2)

Model 9K2 is designed with a cabinet incorporating the "Magic Voice." This is accomplished by having the rear of the speaker compartment completely enclosed by a tight-fitting back.

Five metal open-end pipes of equal diameter but of three different lengths are inserted in holes in the cabinet base and extend upward in the speaker compartment. The effect is to cause the lower-frequency waves, reaching the front of the cabinet through the pipes, to arrive approximately in-phase giving extended low-frequency response without boominess, or cabinet resonance.

SERVICE DATA

The various diagrams in this booklet contain such information as will be needed to locate causes for defective operation if such develops. The values of the various resistors, capacitors, coils, etc., are indicated adjacent to the symbols signifying these parts on the diagram. Identification tables, such as C1, L2, R1, etc., are provided for reference between the illustrations and the Replacement Parts List. The coils, reactors, and transformer windings are rated in terms of their d-c resistance only. Resistance values of less than one ohm are generally omitted.

Alignment Procedure

There are seventeen adjustments required for the alignment of the oscillator, first-detector, and antenna-tuned circuits, one adjustment for the wave-trap, and four adjustments for the i-f system. Fifteen of these adjustments are made with plunger-type air trimmer capacitors and require the use of an RCA Stock No. 12636 **Adjusting Tool**. Each of these capacitors has a lock nut for securing the plunger in place after adjustment. The remaining seven adjustments are made by means of screws attached to molded magnetite cores. These cores change the inductance of the particular coils in which they are inserted to provide exact alignment. All of these adjustments are accurately made during manufacture and should remain in proper alignment unless affected by abnormal conditions of climate or purported alterations for servicing, or unless altered by other means. Loss of sensitivity, improper tone quality, and poor selectivity are the usual indications of improper alignment. Such conditions will usually exist simultaneously. Correct performance of this receiver can only be obtained when these adjustments have been made by a skilled service engineer with the use of adequate and reliable test equipment. The manufacturer of this receiver has such test equipment available for sale through its distributors and dealers.

The extensive frequency range of these receivers necessitates a more or less involved method of alignment. However, if the following directions are carefully applied in the sequence given, normal performance of the instrument will be obtained.

The plunger-type air trimming capacitors have their approximate plunger settings tabulated on figure 6. If the plungers have been disturbed from their original adjustments, they may be roughly set to the specified dimensions prior to alignment.

In performing services on the "Magic Brain", the leads should be restored to their original positions, since the lead-dress is important for proper operation and dial calibration.

Preparatory Drawing of Leads for "Magic Brain" Alignment
(Refer to Figure 4)

Band "X"

1. Keep blue lead A of S1 to antenna coil L6-5 dressed away from chassis, and from yellow lead X of S1 to antenna coil L5-6.
2. The lead from C10 to S1 should be as short as possible.
3. Keep blue lead A of S1 to detector coil L18-19 clear of chassis, shield, coil, and other leads.
4. Keep spaghetti lead C6 to X of S1 apart from spaghetti lead C5 to A of S1, and from chassis.

Band "A"

1. Keep green lead terminal S1 to antenna coil tap L4 away from chassis, coil shield, and coil.
2. The spaghetti lead C5 to A of S1 apart from spaghetti lead C6 to X of S1 and from chassis.

Band "C"

Lead from C19 to oscillator coil L7 should be maintained as short and straight as possible.

For alignment, the test-oscillator frequency should be quite accurate. A convenient and reliable means of accurately checking the frequency of test oscillators, receivers, etc., is the RCA Stock No. 9572 **Crystal Calibrator**.

If the test-oscillator signal cannot be heard as the receiver (heterodyne) oscillator, air-trimmer plunger is changed from its minimum-capacity to maximum-capacity position (receiver dial and test oscillator set to the specified frequencies, and the correct oscillator air-trimmer used) it may be an indication that the test-oscillator frequency is outside the range covered by the air-trimmer. Under such conditions, when a more accurate setting of the test oscillator cannot be determined, set the oscillator air-trimmer plungers to the approximate settings given on figure 6. Tune the test oscillator until the signal is heard in the speaker. Each of two test-oscillator settings (the fundamentals or the harmonics of which are 920 kc apart) produce a signal. The lower-frequency test-oscillator setting should be used at this places the test-oscillator (signal) frequency 460 kc below the frequency of the receiver heterodyne oscillator.

Holes are provided in the top of the r-f and antenna coil cans on some models to enable a tuning check with the RCA Stock No. 6679 **Tuning Wand**. The hole in the top of the detector coil can has a cinch button which must be removed before insertion of the tuning wand. When the brass end of the wand is inserted in the coil, the inductance of the coil is decreased. If this results in an increase of output, the respective air-trimmer capacitance should be decreased (plunger pulled out). If inserting the iron end of the tuning wand causes an increase in output, resulting from an increase of inductance of the coil, the respective air-trimmer capacitance should be increased (plunger pushed in). If the range of the air trimmer is not sufficient to give the desired results, the lead-dress may be changed as the particular circuit being aligned, so as to cause the circuit to resonate within the range of the trimmer. An increase in the capacity-to-ground of the circuit will be required if the iron end of the tuning wand causes an increase of signal output when the air-trimmer plunger is full-in, while a decrease in the capacity-to-ground will be required if the brass end of the tuning wand causes an increase in signal output when the air-trimmer plunger is full-out.

Two methods of alignment are applicable—one requires use of the cathode-ray oscillograph, and the other requires a voltmeter or glow-type indicator. The cathode-ray alignment method is advantageous in that the indication provided is in the form of a wave-image which represents the resonance characteristics of the circuit being tuned. This type of alignment is possible through use of apparatus such as the RCA Stock No. 9558 **Frequency Modulator** and the RCA Stock No. 9545 **Cathode-Ray Oscillograph**. The output-indicator method should be performed with an instrument such as the RCA Stock No. 4317 **Neon Glow Indicator**. Both of these procedures are outlined below.

Cathode-Ray Alignment

Make alignment apparatus connections shown on figure 5. Remove the plug of the frequency-modulator cable from the test-oscillator jack. Connect the receiver chassis to a good external ground. Connect oscillograph "Vertical" input terminals as indicated on figure 5. Set oscillograph power switch to "On" and adjust "Intensity" and "Focus" controls to give a clearly defined spot, or line, on the screen. Set oscillograph "Ampl. A" switch to "On," "Vertical gain" control full-clockwise, "Ampl. B" switch to "Timing," "Range" switch to No. 2 position, and "Timing" switch to "Int." Place the "Sync." control, "Freq." control, and "Horizontal gain" control to about their mid-positions. For each of the following adjustments, the test-oscillator output must be regulated so that the image obtained on the oscillograph screen will be of the minimum size for accurate observation. The receiver volume-control setting is optional.

I-F Adjustments

(a) Connect the "Ant." output of the test oscillator to the grid cap of RCA-6K7 i-f tube (with grid lead in place) through a .001-mfd. capacitor, with "Gnd." to receiver chassis. Tune the test oscillator to 460 kc and place its modulation switch to "On" and its output switch to "Hi."

(b) Turn on the receiver and test oscillator. Increase the output of the test oscillator until a deflection is noticeable on the oscillograph screen. The figures obtained represent several waves on the detected signal, the amplitude of which may be observed as an indication of output. Cause the wave-image formed (400-cycle waves) to be spread completely across the screen by adjusting the "Horizontal gain" control. The image should be synchronized and made to remain motionless by adjusting the "Sync." and "Freq." controls.

(c) Adjust the two magnetite core screws L27 and L26 (see figures 1 and 8) of the second i-f transformer (one on top and one on bottom) to produce maximum vertical deflection of the oscillographic image. This adjustment places the transformer in exact resonance with the 460-kc signal.

(d) The sweeping operation should follow using the frequency modulator. Shift the oscillograph "Timing" switch to "Ext." Insert plug of frequency-modulator cable in test-oscillator jack. Turn the test-oscillator modulation switch to "Off." Turn on the frequency modulator and place its sweep-range switch to "Hi."

(e) Increase the frequency of the test oscillator by slowly turning its tuning control until two separate, distinct, and similar waves appear on the screen. If only one wave appears, increase the "Freq." control on the oscillograph to obtain two waves. These waves will be identical in shape, usually disconnected, and appear in reversed positions. They will have a common base line, which is discontinuous. Adjust the "Freq." and "Sync." controls of the oscillograph to make these remain motionless on the screen. Continue increasing the test-oscillator frequency until these forward and reverse curves move together and overlap, with their highest points exactly coincident. This condition will be obtained at a test-oscillator setting of approximately 975 kc.

(f) With the images established as in (e), re-adjust the two magnetite core screws L27 and L26 on the second i-f transformer so that they cause the curves on the oscillograph screen to become exactly coincident throughout their lengths and have maximum amplitude.

(g) Without altering the adjustments of the apparatus, shift the "Ant." output of the test oscillator to the input of the i-f system, i.e., to the RCA-6L7 first-detector grid cap, through a .001-mfd. capacitor (with grid lead in place). Regulate the test-oscillator output so that the amplitude of the oscillographic image is approximately the same as used for adjustment (f) above.

(h) The two first i-f transformer magnetite core screws L25 and L24 (one on top and one on bottom) should then be adjusted so that they cause the forward and reverse curves to become coincident throughout their lengths and have maximum amplitude. The composite wave obtained in this manner represents the resonance characteristic of the total i-f system. Lack of symmetry or irregularity of the resultant image will indicate the presence of a defect in the i-f system.

R-F Adjustments

Make receiver dial adjustments as outlined by 'Selector dial," figure 11. Alignment must be made in sequence of "Wave-trap," "Ultra short wave" band, "Short wave" band, "Medium wave" band, "Standard broadcast" band, and "Long wave" band.

"Wave-Trap" Adjustment

(a) Connect the output of the test oscillator to the antenna terminal "A1" through a **200-mmfd. (important)** capacitor. Remove the plug of the frequency-modulator cable from the test-oscillator jack. Turn test-oscillator modulation switch to "On." Shift the oscillograph "Tuning" switch to "Int." Place receiver range selector in "Standard broadcast" position. Set the receiver dial to a position of no extraneous signals near **600 kc**. Tune the test oscillator to 600 kc. Adjust the wave-trap magnetite core screw to the point which causes minimum amplitude of output (maximum suppression of signal) as shown by the waves on the oscillograph. An increase of the test-oscillator output may be necessary before this point of minimum amplitude, obtained by correct adjustment of wave-trap screw, be come apparent on oscillograph screen.

"Ultra Short Wave" Band

(b) Connect the "Ant." output of the test oscillator to the antenna terminal "A1" of the receiver through a **500-ohm** resistor. Set the receiver range selector to its "Ultra short wave" position and its dial pointer to **57,000 kc**. Adjust the test oscillator to **19,000 kc**. The third harmonic of 19,000 kc is used for this adjustment. If the indication on the oscillograph screen is not sufficient for the following adjustments at 57,000 kc, the vertical-input terminals of the cathode-ray oscillograph may be connected thus: "Hi" to the plate contact of the RCA-6L6 power-output tube socket with the "0" terminal to chassis ground. The receiver should be turned off while making this connection since the plate potential is impressed across the oscillograph input and a severe shock will result if contact is made between these two points. If this connection is made, advance the receiver volume control to its maximum position. Adjust oscillator air-trimmer C23 for maximum (peak) output. Two positions, each producing maximum output, may be found. The position of minimum capacitance (plunger near out) should be used. This places the receiver heterodyne oscillator **460** kc higher in frequency than the incoming signal. Tighten lock nut. Adjust the detector air-trimmer C39, while slightly rocking the gang tuning condenser back and forth through the signal, for maximum (peak) output. Two peaks may be found on this trimmer. The peak of maximum capacitance (plunger near in) should be used. Tighten lock nut. Adjust the antenna air-trimmer C10 for maximum (peak) output while slightly rocking the gang tuning dial back and forth through the signal. Two peaks may be found on this trimmer which produce maximum output. The peak with maximum capacitance (plunger near in) should be used. Tighten lock nut. Check the image frequency by changing the receiver dial setting to **56,080 kc**. If the image signal is received at this position, the adjustment of the oscillator air-trimmer C23 has been correctly made. No adjustments should be made while checking for the image signal.

(c) Re-tune receiver for maximum response to 57,000 kc (not image response) without disturbing test-oscillator adjustments. Change test oscillator to **6,000—10,000 kc** range. Tune test oscillator until signal is heard in speaker (should occur at approximately **14,250 kc**, fourth harmonic of test oscillator used). Two test-oscillator settings (**230 kc** apart) will produce a signal at this point. The lower frequency test-oscillator setting should be used, as this places the test oscillator harmonic **460 kc** below the frequency of the receiver heterodyne oscillator. Tune receiver for maximum response at a dial setting of approximately **28,500 kc** (image should tune to at a dial setting approximately **27,580 kc**) without altering test-oscillator adjustment. Test-oscillator second harmonic of **14,250 kc** is used for the following check. Check calibration of receiver dial. A receiver-dial reading of less than **28,500 kc** indicates that the inductance of the oscillator secondary coil L11 is too low and should be increased. If the receiver dial reading is greater than **28,500 kc**, the inductance of L11 is too high and should be decreased. If it is necessary to change the inductance of L11, first remove bottom cover of "Magic Brain" and then set receiver dial pointer to **28,500 kc**. To decrease inductance, move the grounded ends (straps) of L11 and L12 (see figure 4) nearer chassis. Do not allow straps to touch chassis except where connected. To increase inductance, move the straps farther away from chassis. Adjust position of straps till maximum (peak) output results. The alignment of the detector tuned circuit should next be checked at **28,500 kc** without changing either the receiver or test oscillator adjustments. An increase of output when the brass end of a tuning wand is brought near L22 indicates that L22 is too high in inductance, while an increase when the iron end is brought near the coil indicates that the inductance is too low. The inductance of L22 may be varied by changing the spacing between the grounded end (strap) of L22 and the strap connected from C41 to contact on S2 (figure 4). An increase of spacing will increase the inductance, while a decrease of spacing will decrease the inductance. Adjust the spacing until maximum (peak) output results. Replace "Magic Brain" bottom cover and repeat adjustments in (b) prior to those of "Short wave" band.

"Short Wave" Band

(d) Set the receiver range selector to its "Short wave" position and its dial pointer to **20,000 kc**. Adjust the test oscillator to **20,000 kc**. If the vertical input cathode-ray connections were changed for adjustment (b) above, they should

©John F. Rider, Publisher

RCA MFG. CO., INC.

MODELS 9T, 9K2
Alignment, Part 2
Notes

be restored to their original position as shown on figure 3. Adjust oscillator air-trimmer C13 until maximum (peak) output is reached. Two peaks may be found with this circuit. The peak with minimum capacitance (plunger near out) should be used. Tighten lock nut. Adjust detector air-trimmer C35 until maximum (peak) output is reached, while slightly rocking the gang tuning condenser back and forth through the signal. Two peaks may be found with this circuit. The peak with maximum capacitance (plunger near in) should be used. Tighten lock nut. Adjust antenna air-trimmer C7 until maximum (peak) output is reached while slightly rocking the gang tuning condenser back and forth through the signal. Two peaks may be found with this circuit. The peak with maximum capacity (plunger near in) should be used. Tighten lock nut. Check the image frequency by changing the receiver dial setting to 19,080 kc. The image signal should be received at this position indicating that the adjustment of C13 has been correctly made. No adjustments should be made while checking for the image signal.

"Medium Wave" Band

(e) Place receiver range selector to its "Medium wave" position with its dial pointer set to 6,000 kc. Tune the test oscillator to 6,000 kc. Adjust oscillator air trimmer C14 to produce maximum (peak) output as shown by the waves on the oscillograph. Two peaks may be found with this circuit. The peak with minimum capacitance (plunger near out) should be used. Tighten lock nut. Adjust the detector air-trimmer C36 for maximum (peak) output while slightly rocking the gang tuning condenser back and forth through the signal. Two peaks may be found with this circuit. The peak with maximum capacitance (plunger near in) should be used. Tighten lock nut. Adjust antenna air-trimmer C6 to produce maximum (peak) output. Tighten lock nut.

"Standard Broadcast" Band

(f) Remove the 300-ohm resistor from between the test-oscillator "Ant." post and receiver antenna terminal "A1" and insert a 200-mmfd. capacitor in its place. Place receiver range selector to "Standard broadcast" position with receiver dial pointer set to 600 kc. Tune the test oscillator to 600 kc. Adjust oscillator magnetic core screw L9 (top of large oscillator coil can) for maximum (peak) output as shown by the waves on the oscillograph screen.

(g) Set receiver dial pointer to 1,500 kc. Tune test oscillator to 1,500 kc (1,500-3,100-kc range) and increase its output to produce a registration on the oscillograph screen. Carefully adjust the oscillator, detector, and antenna air-trimmers C16, C37 and C5, respectively, to produce maximum (peak) output as shown by the waves on the oscillograph screen. Shift the oscillograph "Timing" switch to "Ext." Place the frequency modulator sweep-range switch to its "Lo" position and insert plug of the frequency-modulator cable in test-oscillator jack. Turn test-oscillator modulation switch to "Off." Re-tune the test oscillator (increase frequency) until the forward and reverse waves show on the oscillograph screen and become coincident at their highest points. This will occur at a test-oscillator setting of approximately 1,680 kc. Adjust trimmers C16, C37, and C5 again, setting each to the point which produces the best coincidence and maximum amplitude of the images.

(h) Remove the plug of the frequency-modulator cable from the test-oscillator jack. Turn test-oscillator modulation switch to "On." Set oscillograph "Timing" switch to "Int." Tune test oscillator to 200 kc (200-400-kc range). Tune receiver for maximum response to this signal at a dial reading of approximately 600 kc. The third harmonic of the 200-kc signal is used for this adjustment. Shift oscillograph "Timing" switch to "Ext." Insert the plug of the frequency-modulator cable in test-oscillator jack. Turn test-oscillator modulation switch to "Off." Re-tune the test oscillator (increased frequency) until the forward and reverse waves show on the oscillograph screen. This will occur at a test-oscillator setting of approximately 230 kc. Disregarding the fact that the two images may or may not come together adjust the oscillator magnetite core screw L9 (top of large oscillator coil can) to produce maximum (peak) amplitude of the images. Shift the oscillograph "Timing" switch to "Int." Remove the plug of the frequency-modulator cable from the test-oscillator jack. Turn the test-oscillator modulation switch to "On." Repeat adjustments in (g) above to compensate for any changes caused by the adjustment of L9 core, tightening lock nuts on C16, C37, and C5, respectively, after each is adjusted.

Radiotron Cathode Current Readings
Measured with 1000-ohms-per-volt Meter Connected to Tube Socket Cathode Terminal under Conditions Similar to Those of Voltage Measurements

(1) RCA-6K7—R-F	8.0 ma.
(2) RCA-6L7—1st Det.	4.4 ma.
(3) RCA-6J7—Osc.	6.7 ma.
(4) RCA-6K7—I-F	8.0 ma.
(5) RCA-6H6—2nd Det.-A.V.C.	—
(6) RCA-6F5—A-F	0.5 ma.
(7) RCA-6L6—Power	63 ma.
(8) RCA-6E5—Eye	1.0 ma.
(9) RCA-5Z4—Rect.	110 ma.

"Long Wave" Band

(i) Shift the oscillograph "Timing" switch to "Int." Remove the plug of the frequency-modulator cable from the test-oscillator jack. Turn the test-oscillator modulation switch to "On." Place receiver range selector to its "Long wave" position. Set the receiver dial pointer to 175 kc. Tune the test oscillator to 175 kc and increase its output until a deflection is noticeable on the oscillograph screen. Adjust oscillator magnetic core screw L10 (located on top of small oscillator coil can) so that maximum (peak) amplitude of output is shown on the oscillograph screen.

(j) Set receiver dial pointer to 350 kc. Tune test oscillator to 350 kc. Adjust the oscillator, detector, and antenna air-trimmers C18, C38, and C6 to produce maximum (peak) output as shown by the waves on the oscillograph screen. Without disturbing the connections, shift the oscillograph "Timing" switch to "Ext." Place the frequency-modulator sweep-range switch to its "Hi" position and insert plug of frequency-modulator cable in test-oscillator jack. Turn test-oscillator modulation switch to "Off." Re-tune the test oscillator (decrease frequency) until the forward and reverse waves show on the oscillograph screen and become coincident at their highest points. This will occur at a test-oscillator setting of approximately 190 kc. This setting places the test-oscillator frequency to 175 kc. The second harmonic is now used for the 350 kc adjustment. Adjust air-trimmers C18, C38, and C6, again, to produce maximum amplitude of the images and beat coincidence throughout their lengths.

(k) Re-tune the receiver to approximately 175 kc so that the forward and reverse waves appear on the oscillograph screen. Adjust the oscillator magnetite core screw L10 to produce maximum (peak) amplitude of the waves, disregarding the fact that the two images may or may not come together.

(l) Shift the receiver dial setting to 350 kc without altering any other adjustments (frequency modulator still in operation). Adjust air trimmers C18, C38, and C6, respectively, to produce maximum amplitude and best coincidence of the waves. These adjustments compensate for any changes caused by the adjustment of the magnetite core screw L10. Tighten lock nuts on C18, C38, and C6, respectively, after each is adjusted.

Output Indicator Alignment

Attach the output indicator across the loudspeaker voice-coil circuit. Advance the receiver "Volume" control to its maximum position, letting it remain in such position for all adjustments. For each adjusting operation regulate the test-oscillator output so that the signal level is as low as possible and still be observable at the receiver output. Use of such small signal will obviate broadness of tuning which would otherwise result from a.v.c. action on a stronger one.

I-F Adjustments

(a) Connect the "Ant." output of the test oscillator to the grid cap of the RCA-6L7 first detector tube (with grid lead in place) through a .001-mfd. capacitor, with "Gnd." to receiver chassis. Tune the test oscillator to 460 kc. Place its modulation switch to "On" and its output switch to "Hi."

(b) Adjust the two magnetite core screws of the second i-f transformer (one on top and one on bottom) to produce maximum (peak) output.

(c) The two first i-f transformer magnetite core screws (one on top and one on bottom) should be adjusted to produce maximum (peak) output. It is advisable to repeat the adjustment of all i-f magnetite core screws to assure that the interaction between them has not disturbed the original adjustments.

R-F Adjustments

Make receiver dial adjustments as outlined by "Selector dial," figure 11. Alignment must be made in sequence of "Wave-trap," "Ultra short wave" band, "Short wave" band, "Medium wave" band, "Standard broadcast" band, and "Long wave" band.

"Wave-Trap" Adjustment

(a) Connect the "Ant." output of the test oscillator to the antenna terminal "A1" on the receiver through a 200-mmfd. (important) capacitor. Place the range selector to its "Standard broadcast" position and set the receiver dial pointer to a position of no extraneous signals near 600 kc. Tune the test oscillator to 460 kc. Adjust the wave-trap magnetite core screw to the point which causes minimum output (maximum suppression of signal). An increase of the test-oscillator output may be necessary before the point of minimum output, obtained by adjustment of wave-trap screw, becomes apparent on the output indicator.

"Ultra Short Wave" Band

(b) Connect the "Ant." output of the test oscillator to the antenna terminal "A1" through a 300-ohm resistor. Set receiver range selector to its "Ultra short wave" position and its dial pointer to 37,000 kc. Adjust the test oscillator to 19,000 kc. The third harmonic of 19,000 kc is used for this adjustment. Adjust the oscillator air-trimmer C23 for maximum (peak) output. Two positions for maximum output may be found. The position of minimum capacitance (plunger near out) should be used. This places the receiver heterodyne oscillator 460 kc higher in frequency than the incoming signal. Tighten lock nut. Adjust the detector air-trimmer C39 while slightly rocking the gang tuning condenser back and forth through the signal for maximum (peak) output. Two peaks may be found on this trimmer. The peak of maximum capacitance (plunger near in) should be used. Tighten lock nut. Adjust the antenna air-trimmer C10 for maximum (peak) output while slightly rocking the gang tuning condenser back and forth through the signal. Two peaks may be found on this trimmer which produce maximum output. The peak with maximum capacitance (plunger near in) should be used. Tighten lock nut. Check the image frequency by changing the receiver dial setting to 36,080 kc. If the image signal is received at this position, the adjustment of the oscillator air-trimmer C23 has been correctly made. No adjustments should be made while checking for the image signal.

(c) Re-tune receiver for maximum response to 37,000 kc (not image response) without disturbing test-oscillator adjustments. Change test oscillator to 6,000–14,000-kc range. Tune test oscillator until signal is heard in speaker (should occur at approximately 14,250 kc, fourth harmonic of test oscillator used). Two test-oscillator settings (200 kc apart) will produce a signal at this point. The lower frequency test-oscillator setting should be used, as this places the test oscillator harmonic 460 kc below the frequency of the receiver heterodyne oscillator. Tune receiver for maximum response at a dial setting of approximately 28,500 kc (image should tune in at a dial setting of approximately 27,580 kc) without altering test-oscillator adjustment. Test-oscillator second harmonic of 14,250 kc is used for the following check. Check calibration of receiver dial. A receiver-dial reading of less than 28,500 kc indicates that the inductance of the oscillator secondary coil L11 is too low and should be increased. If the receiver-dial reading is greater than 28,500 kc, the inductance of L11 is too high and should be decreased. If it is necessary to change the inductance of L11, first remove bottom cover of "Magic Brain" and then set receiver dial pointer to 28,500 kc. To decrease inductance, move the grounded ends (straps) of L11 and L12 (see figure 4) nearer chassis. Do not allow straps to touch chassis except where connected. To increase inductance, move the straps farther away from chassis. Adjust position of straps till maximum (peak) output results. The alignment of the detector-tuned circuit should next be checked at 28,500 kc without changing either the receiver or test oscillator adjustments. An increase of output when the b ass end of a tuning wand is brought near L22 indicates that L22 is too high in inductance, while an increase when the iron end is brought near the coil indicates that the inductance is too low. The inductance of L22 may be varied by changing the spacing between the grounded end strap of L22 and the strap connected from C41 to contact on S2. An increase of spacing will increase the inductance, while a decrease of spacing will decrease the inductance. Adjust the spacing until maximum (peak) output results. Replace "Magic Brain" bottom cover and repeat adjustments in (b) prior to those of "Short wave" band.

"Short Wave" Band

(d) Set the receiver range selector to its "Short wave" position and its dial pointer to 20,000 kc. Adjust the test oscillator to 20,000 kc. Adjust oscillator air-trimmer C13 until maximum (peak) output is reached. Two peaks may be found with this circuit. The peak with minimum capacitance (plunger near out) should be used. Tighten lock nut. Adjust detector air-trimmer C35 until maximum (peak) output is reached, while slightly rocking the gang tuning condenser back and forth through the signal. Two peaks may be found with this circuit. The peak with maximum capacity (plunger near in) should be used. Tighten lock nut. Adjust antenna air-trimmer C7 until maximum (peak) output is reached, while slightly rocking the gang tuning condenser back and forth through the signal. Two peaks may be found with this circuit. The peak with maximum capacitance (plunger near in) should be used. Tighten lock nut. Check the image frequency by changing the receiver dial setting to 19,080 kc. The signal should be received at this position indicating that the adjustment of C13 has been correctly made. No adjustments should be made while checking for the image signal.

"Medium Wave" Band

(e) Place receiver range selector to its "Medium wave" position with the receiver dial pointer set to 6,000 kc. Tune the test oscillator to 6,000 kc. Adjust oscillator air-trimmer C14 to produce maximum (peak) output. Two peaks may be found with this circuit. The peak with minimum capacitance (plunger near out) should be used. Tighten lock nut. Adjust the detector air-trimmer C36 for maximum (peak) output while slightly rocking the receiver gang tuning condenser back and forth through the signal. Two peaks may be found with this circuit. The peak with maximum capacitance (plunger near in) should be used. Tighten lock nut. Adjust antenna air-trimmer C6 to produce maximum (peak) output. Tighten lock nut.

"Standard Broadcast" Band

(f) Remove the 300-ohm resistor from between the test-oscillator "Ant." post and receiver antenna terminal "A1" and insert a 200-mmfd. capacitor in its place. Place receiver range selector to its "Standard broadcast" position with the receiver dial pointer set to 600 kc. Adjust the oscillator magnetite core screw L9 (top of large oscillator coil can) for maximum (peak) output.

(g) Set receiver dial pointer to 1,500 kc. Tune test oscillator to 1,500 kc and regulate its output until a slight indication of output is visible. Carefully adjust the oscillator, detector, and antenna air-trimmers C16, C37, and C5, respectively, to produce maximum (peak) output.

(h) Tune test oscillator to 600 kc. Tune the receiver to pick up this signal near 600 kc, disregarding the dial reading at which it is best received. Adjust oscillator magnetite core screw L9 (top of large oscillator coil can) for maximum (peak) output while slightly rocking the gang tuning condenser back and forth through the signal. Repeat adjustments in (a) above to compensate for any change caused by adjustment of L9 magnetite core screw, tightening lock nuts on C16, C37, and C5, respectively, after each is adjusted.

"Long Wave" Band

(i) Place receiver range selector to its "Long wave" position, with dial pointer set to 175 kc. Tune the test oscillator to 175 kc and increase its output until a slight indication of output is visible. Adjust oscillator magnetite core screw L10 (top of small oscillator coil can) for that maximum (peak) output.

(j) Set receiver dial position to 350 kc. Tune test oscillator to 350 kc. Adjust the oscillator, detector, and antenna air-trimmers C18, C38, and C6, respectively, to produce maximum (peak) output.

(k) Tune test oscillator to 175 kc. Tune receiver to pick up this signal near 175 kc, disregarding the dial reading at which it is best received. Adjust oscillator magnetite core screw L10 (top of small oscillator coil can) for maximum (peak) output while slightly rocking the gang tuning condenser back and forth through the signal. Repeat adjustments in (j) above to compensate for any changes caused by the adjustment of the magnetite core screw L10. Tighten lock nuts on C18, C38, and C6, respectively, after each is adjusted.

Loudspeaker

Centering of the loudspeaker voice coil is made in the usual manner with three narrow paper feelers after first removing the front paper dust cover. This may be removed either permanently by cutting it away with a sharp knife, or by softening its cement with a very slight application of acetone using care not to allow the acetone to flow down into the air gap. The dust cover may be cemented back in place with ambroid upon completion of adjustment.

Phonograph Terminal Board

A terminal board is provided for connecting a phonograph into the audio amplifying circuit. Typical methods of connecting a low-impedance pickup, or the RCA Victor Models R-93, R-93-2, and R-93-S Record Players are shown on the Schematic Diagram (figure 7).

Selector Dial

Figure 11 illustrates the relation of the various parts of the dial mechanism when in its "Standard broadcast" position with the range switch likewise turned to its "Standard broadcast" position. In re-assembling the dial after repairs, see that the gears are meshed in accordance with the diagram, at the same time noting that the range switch is in its "Standard broadcast" position and the lever attached to the range-switch shaft placed in the position shown.

To adjust the dial mechanism, set the range switch to its "Standard broadcast" position. Place a straight-edge across the center of the dial so that its edge is even with the lower (end) marking at both the low-frequency and high-frequency ends of the dial. Under such conditions the straight-edge should be parallel with the top of the chassis base. If the straight-edge is not parallel with the top of the chassis base, loosen the nut on the rear of the roller link pivot stud and move the stud up or down until the link roller moves the dial to the desired position so that the end calibration marks obtain the positions mentioned above. Tighten the nut on the roller link pivot stud.

Set the gang tuning condenser to its maximum capacity position. Adjust the dial pointer to the low-frequency (end) mark on "Standard broadcast" scale. This is a friction adjustment.

With the gang tuning condenser plates still in full mesh, loosen the two set screws on the vernier-dial hub. Rotate the vernier dial until the "0" marking is in a vertical plane above the center of the shaft. Tighten set screws.

Antenna and Ground Terminals

These receivers are equipped with an antenna-ground terminal board having three terminals. These terminals are marked "A2," "A1," and "G," the latter being the ground terminal and should always be connected to a good external ground. The transmission-line leads of the RCA RK-40A antenna system should be connected to terminals "A2" and "A1." The receiver coupling units of the RCA RK-40 and the RCA Spider-Web antenna systems should be connected to terminals "A1" and "G." Connect a single-wire antenna to terminal "A1."

General Description

These receivers represent the result of thorough development, design, and substantial manufacture. Noteworthy technical improvements have been applied in achieving marked advantages of operation, and efficiency of performance.

Model 9T is a nine-tube, table-type, "Magic Brain" superheterodyne receiver with an eight-inch electrodynamic loudspeaker. Model 9K2 employs an identical radio chassis, is of the console-type, has a twelve-inch electrodynamic loudspeaker, and incorporates the newly developed "Magic Voice." Design features incorporated in these receivers include built in doublet antenna coupler; "Magic Brain"; improved planeer-type air-dielectric adjustable trimming capacitors in the antenna, detector, and oscillator coil circuits; tuned r-f amplifier; high-efficiency first detector (converter) with separate oscillator; beam-type power amplifier; magnetite core adjusted i-f transformers, low-frequency oscillator tracking, and wave-trap; two-point aural compensated volume control; music-speech switch; automatic volume control; phonograph terminal board; new selector dial; and a dust-proof electrodynamic loudspeaker.

Service convenience has been a controlling factor in the layout of the chassis parts and wiring. The assembly of these various elements is such that the number of conductors is minimized, with all important connections being readily accessible. Trimming adjustments are located at accessible points. A double tuning knob arrangement permits the choice of either a twenty-to-one or a hundred-to-one dial drive ratio. The latter permits ease of tuning, especially in the "Medium wave", "Short wave", and "Ultra short wave" bands.

Mechanical Specifications

	Model 9T	Model 9K2
Cabinet Dimensions		
Height	27½ inches	41 inches
Width	17½ inches	27¹⁵⁄₁₆ inches
Depth	12¾ inches	14½ inches
Weights		
Net	49 pounds	86 pounds
Shipping	53 pounds	129 pounds
Chassis Base Dimensions	15 x 9⅝ x 3 inches	
Over-all Height of Chassis	9¼ inches	
Tuning Drive Ratios	20 to 1 and 100 to 1	

Radiotron Complement

(1) RCA-6K7	R-F Amplifier
(2) RCA-6L7	First Detector
(3) RCA-6J7	Oscillator
(4) RCA-6K7	I-F Amplifier
Pilot Lamps (4)	Mazda No. 46, 6.3 volts, 0.25 ampere
(5) RCA-6H6	Second Detector and A.V.C.
(6) RCA-6F5	Audio Voltage Amplifier
(7) RCA-6L6	Power Output
(8) RCA-6E5	Tuning Tube
(9) RCA-5Z4	Full-Wave Rectifier

©John F. Rider, Publisher

MODELS 9T, 9K2

Parts List

RCA MFG. CO., INC.

Stock No.	Description	List Price
12907	Capacitor—Adjustable trimmer capacitor (C33, C35, C36, C37)	.35
12884	Capacitor—Adjustable trimmer capacitor (C10, C18, C23, C38, C39)	.40
12896	Capacitor—15 Mmfd. (C34)	.20
12722	Capacitor—18 Mmfd. (C15)	.20
12891	Capacitor—36 Mmfd. (C49)	.20
12629	Capacitor—56 Mmfd. (C24)	.20
12895	Capacitor—56 Mmfd. (C17)	.20
12723	Capacitor—56 Mmfd. (C2, C44)	.20
13307	Capacitor—62 Mmfd. (C11)	.20
12724	Capacitor—120 Mmfd. (C25, C28, C39)	.28
12725	Capacitor—150 Mmfd. (C1)	.28
12894	Capacitor—180 Mmfd. (C22)	.20
12727	Capacitor—555 Mmfd. (C21)	.20
12537	Capacitor—560 Mmfd. (C7, C26, C33, C42)	.20
12898	Capacitor—1,500 Mmfd. (C12)	.20
12729	Capacitor—1,550 Mmfd. (C20)	.20
12728	Capacitor—4,500 Mmfd. (C19)	.26
12897	Capacitor—4,700 Mmfd. (C43)	.40
4858	Capacitor—.01 Mfd. (C8, C30, C31, C32)	.25
12879	Coil—Antenna coil and shield XABC bands (L2, L3, L4, L5, L6)	1.90
12888	Coil—Antenna coil "D" band (L13, L14)	.80
12880	Coil—Detector coil and shield XABC bands (L15, L16, L17, L18, L19, L20)	2.05
12709	Coil—Oscillator coil and shield ABC bands (L7, L8, L9)	2.02
12881	Coil—Oscillator coil and shield X band only (L10)	.80
12890	Coil—Oscillator coil "D" band (L11, L12, L23)	.70
12889	Coil—R.F. coil "D" band (L21, L22)	.65
12877	Condenser—3-gang variable tuning condenser (C9, C27, C41)	5.10
12887	Connector—8-contact male connector and cover for power cable Stock No. 12886	.40
12664	Core—Adjustable core and stud for Stock No. 12654	.22
12800	Core—Adjustable core and stud for Stock No. 12709	.20
12882	Core—Adjustable core and stud for Stock No. 12881	.20
11324	Resistor—560 ohms—carbon type—¼ watt (R2)—Package of 5	1.00
5112	Resistor—1,000 ohms—carbon type—¼ watt (R3)—Package of 5	1.00
11198	Resistor—5,600 ohms—carbon type—1 watt (R6)—Package of 5	.22
3998	Resistor—15,000 ohms—carbon type—¼ watt (R5)—Package of 5	1.00
11282	Resistor—36,000 ohms—carbon type—1/10 watt (R4, R9)—Package of 5	.75
8064	Resistor—82,000 ohms—carbon type—½ watt (R8)—Package of 5	1.00
11397	Resistor—560,000 ohms—carbon type—1/10 watt (R1, R7)—Package of 5	.75
12651	Shield—Coil shield for Stock Nos. 12879, 12880	.22
12710	Shield—Coil shield for Stock No. 12709	.28
12881	Shield—Coil shield for Stock No. 12881	.20
11198	Socket—7-contact 6K7 radiotron socket	.15
11279	Socket—7-contact 6L7 radiotron socket	.20
12885	Socket—8-contact 6J7 radiotron socket	.20
12007	Spring—Retaining spring for core Stock Nos. 12664, 12800, 12882—Package of 10	.36
12878	Switch—Range switch and mounting nut (S1, S2, S3)	3.60
12654	Trap—Wave trap complete (L1)	.75
10705	DRIVE ASSEMBLIES Ball—5/32-in. dia. steel ball for planetary drive—Package of 20	.25
10941	Ball—1/8-in. dia. steel ball for planetary drive bearing—Package of 20	.25
12904	Bushing—Plate and bushing assembly for planetary drive mounting	.20
12905	Coupling—Flexible coupling and shaft assembly complete	.50
12909	Dial—Band indicating dial and cam assembly	1.05
12899	Drive—Variable tuning condenser drive complete including mounting bracket, drive, dial scale, and indicator less vernier dial Stock No. 12870 and link Stock No. 12868	4.40
12906	Gear—Anti-lash drive gear complete	.75
12910	Gear—Sector gear and link assembly for band selector	.20
12908	Indicator—Station selector indicator pointer	.20
8051	Link—Link and roller assembly complete with spring	.30
12911	Screen—Dial lamp screen and light diffuser	.20
4669	Screw—Set screw for flexible coupling or gear Stock No. 12905 and 12906—Package of 10	.25
12901	Shaft—Direct drive shaft and pinion gear for planetary drive	.75
12900	Shaft—Vernier drive shaft for planetary drive	.25
12903	Spring—Tension spring for planetary drive bearing—Package of 10	.20
12907	Spring—Tension spring for gear Stock No. 12906—Package of 10	.20
8052	Spring—Tension spring for link Stock No. 8051—Package of 5	.32
12914	REPRODUCER ASSEMBLIES Board—3-contact reproducer terminal board	.25
12640	Bracket—Output transformer mounting bracket and clamp assembly	.18
12912	Coil—Field coil (L30)	1.70
12642	Cone—Reproducer cone and dust cap (L28) (Model 9T)	.94
12667	Cone—Reproducer cone and dust cap (L28) (Model 9K2)	1.00
5118	Plug—3-contact male reproducer plug	.25
9714	Reproducer Complete—(Model 9T)	6.85
9716	Reproducer Complete—(Model 9K2)	7.80
12913	Transformer—Output transformer (T2)	1.45
11886	Washer—Spring washer to hold field coil securely—Package of 5	.20
11996	MISCELLANEOUS ASSEMBLIES Bracket—Tuning lamp mounting bracket and clamp	.22
12915	Crystal—Station selector escutcheon and crystal	1.30
12742	Escutcheon—Tuning lamp escutcheon	.22
12699	Knob—Large station selector knob—Package of 5	.68
11347	Knob—Low frequency tone control and power switch volume control range switch or high frequency tone control knob—Package of 5	.75
12700	Knob—Small (vernier) station selector knob—Package of 5	1.00
11377	Screw—Chassis mounting screw assembly for cable model only—Package of 4	.12
11210	Screw—Chassis mounting screw assembly for console model only—Package of 4	.28
12916	Shield—Complete R.F. unit shield	.90
11349	Spring—Retaining spring for knob Stock No. 11347 and 12700—Package of 5	.25
4981	Spring—Retaining spring for knob Stock No. 12699—Package of 10	.50
3903	Screw—No. 8-32-3/16 headless cup point set screw for Stock No. 12870—Package of 20	.36
12869	Shaft—Range switch and band indicator operating shaft and hub assembly	.25
12008	Shield—I.F. transformer shield for Stock No. 12652, 12653	.28
12607	Shield—I.F. transformer shield for Stock No. 12652	.30
12581	Shield—I.F. transformer shield top for Stock No. 12653	.36
13095	Socket—Dial lamp socket	.25
11222	Socket—Dial lamp socket	.18
11381	Socket—Tuning lamp socket and cover	.45
11195	Socket—5-contact 5Z4 radiotron socket	.15
11198	Socket—7-contact 6H6, 6K7, 6L6 or 6F5 radiotron sockets	.15
11196	Socket—8-contact socket for R.F. unit power cable plug	.15
12007	Spring—Retaining spring for Stock No. 12006	.36
12860	Tone Control—Low frequency tone control and power switch (S4, S5)	1.50
12862	Tone Control—High frequency tone control (R27)	1.00
12652	Transformer—First I.F. transformer complete (L24, L25, C45, C46)	1.60
12856	Transformer—Power transformer 105-125 volt, 50-60 cycle (T1)	5.35
12857	Transformer—Power transformer 105-125 volt, 25 cycle (T1)	7.10
12858	Transformer—Power transformer 100-250 volt, 40-60 cycle (T1)	8.75
12653	Transformer—Second I.F. transformer complete (L26, L27, C49, C50, C52, R12, R13)	2.06
12861	Volume Control—(R20)	1.00
	MAGIC BRAIN UNIT ASSEMBLIES	
12806	Board—3-contact antenna and ground terminal board	.25
5237	Bushing—Variable condenser mounting bushing assembly—Package of 3	.45
12886	Cable—Shielded power cable approx. 4-in. long complete with 8-contact male plug	1.50
12511	Cap—Grid contact cap—Package of 5	.15
12714	Capacitor—Adjustable trimmer capacitor (C3, C4, C5, C6, C14, C16)	.38
12813	Capacitor—Adjustable trimmer capacitor (C1, C2, C12, C13)	.38
12814	Capacitor—Adjustable trimmer capacitor (C31, C32)	.38
12815	Capacitor—Adjustable trimmer capacitor (C40, C48)	.38
12816	Capacitor—Adjustable trimmer capacitor (C45, C46)	.38
12817	Capacitor—Adjustable trimmer capacitor (C47, C50)	.38
12818	Capacitor—Adjustable trimmer capacitor (C51, C52)	.38
12819	Capacitor—Adjustable trimmer capacitor (C53, C54)	.38
12820	Capacitor—Adjustable trimmer capacitor (C55, C56, C57, R21, R22)	1.50
12873	Capacitor Pack—Comprising one 3 Mfd. and one 20 Mfd. section used in 25 cycle Model only (C61, C69)	1.20
12734	Capacitor—120 Mmfd. (C59)	.28
12404	Capacitor—120 Mmfd. (C45, C46, C49, C50)	.26
12406	Capacitor—180 Mmfd. (C52)	.26
4614	Capacitor—.01 Mfd. (C51)	.54
4858	Capacitor—.01 Mfd. (C60)	.25
4937	Capacitor—.01 Mfd. (C63)	.25
4836	Capacitor—.05 Mfd. (C53)	.30
4886	Capacitor—.05 Mfd. (C62)	.20
4841	Capacitor—.1 Mfd. (C54)	.22
11414	Capacitor—.1 Mfd. (C47)	.20
4840	Capacitor—.25 Mfd. (C58)	.30
5170	Capacitor—.25 Mfd. (C48, C68)	.25
12741	Capacitor—.5 Mfd. (C64)	.34
5212	Capacitor—.18 Mfd. (C67)	1.16
12872	Capacitor—.10 Mfd. (C61)	.90
12467	Capacitor—.30 Mfd. (C65, C66)	1.40
5119	Connector—3-contact female connector for speaker leads	.25
12006	Core—Adjustable core and stud for Stock No. 12652 and 12653	.22
12870	Dial—Vernier dial and disc assembly	.65
12866	Foot—Chassis mounting bracket and foot assembly—Package of 2	.75
5226	Lamp—Dial lamp—6.3 volt—Package of 5	.70
12868	Link—Range switch and band indicator operating link complete with set screw	.45
12871	Reactor—Filter reactor (L31)	1.50
12865	Resistor—Voltage divider resistor—Comprising one section 250 ohm, one section 17 ohm and one section 11 ohm (R17, R18, R26)	.45
12876	Resistor—10,000 ohms—wire wound, 10 watt (R10)	.55
12864	Resistor—17,000 ohms—wire wound (R19)	.70
11282	Resistor—36,000 ohms—carbon type—1/10 watt (R12)—Package of 5	.75
12875	Resistor—56,000 ohms—carbon type—1 watt (R16)—Package of 5	1.10
11398	Resistor—220,000 ohms—carbon type—1/10 watt (R13)—Package of 5	.75
11453	Resistor—270,000 ohms—carbon type—1/10 watt (R14)—Package of 5	.75
11172	Resistor—470,000 ohms—carbon type—¼ watt (R23)—Package of 5	1.00
11452	Resistor—470,000 ohms—carbon type—1/10 watt (R25)—Package of 5	.75
12013	Resistor—1 Megohm—carbon type—1/10 watt (R28)—Package of 5	.75
11626	Resistor—2.2 Megohm—carbon type—¼ watt (R11)—Package of 5	1.00
12874	Resistor—3.3 Megohm—carbon type—¼ watt (R14, R15)—Package of 5	1.00
4669	Screw—No. 8-32-5/32 set screw for link Stock No. 12868—Package of 10	.25

©John F. Rider, Publisher

MODELS C9-4(Late), T9-10

RCA MFG. CO., INC.

Schematic

Frequency Ranges

Band A.....540-1,800 kc.
Band B.....1,800-6,000 kc.
Band C.....6,000-18,000 kc.

Alignment Frequencies

Band A...600 kc. (osc.), 1,720 kc. (osc., det., ant.
Band B.....6,132 kc. (osc., det., ant.
Band C.....18,000 kc. (osc., det., ant.

Figure 1—Schematic Circuit Diagram

For Voltage, Alignment, etc., see Model C9-4

General Description

These two models each employ the same type of chassis and are similar to the original RCA Victor Model C9-4. The main changes consist of the following: (1) An RCA-5Z4 metal rectifier is used in place of the RCA-5Z3 glass rectifier, and (2) a Speech-Music Control is added to the compensated volume control circuit and is actuated by the same knob as the power switch. The Console Model (C9-4) employs a 12-inch dynamic loudspeaker and the Table Model (T9-10) employs an 8-inch dynamic loudspeaker.

Service Data

All Service Data contained in the Service Notes for RCA Victor Model C9-4 are directly applicable to these instruments except the Schematic Diagram, Wiring Diagram, and Replacement Parts. Other differences not illustrated are as follows:

Universal Transformer d-c resistance (Figure 7 of C9-4 Service Note).

Primary Winding 17.3 ohms total.

Secondary Winding 400 ohms total.

©John F. Rider, Publisher

MODELS C9-4(Late),T9-10
Chassis Wiring

RCA MFG. CO., INC.

Power Supply Ratings

Rating A.....105-125 volts, 50-60 cycles, 105 watts
Rating B.....105-125 volts, 25-60 cycles, 105 watts
Rating C..100-130/140-160/195-250 volts, 40-60 cycles, 105 watts

Loudspeaker

Type.....Electrodynamic
Voice Coil Impedance.....2¼ Ohms at 400 Cycles

Power Output Ratings

Undistorted.....2 Watts
Maximum.....4½ Watts

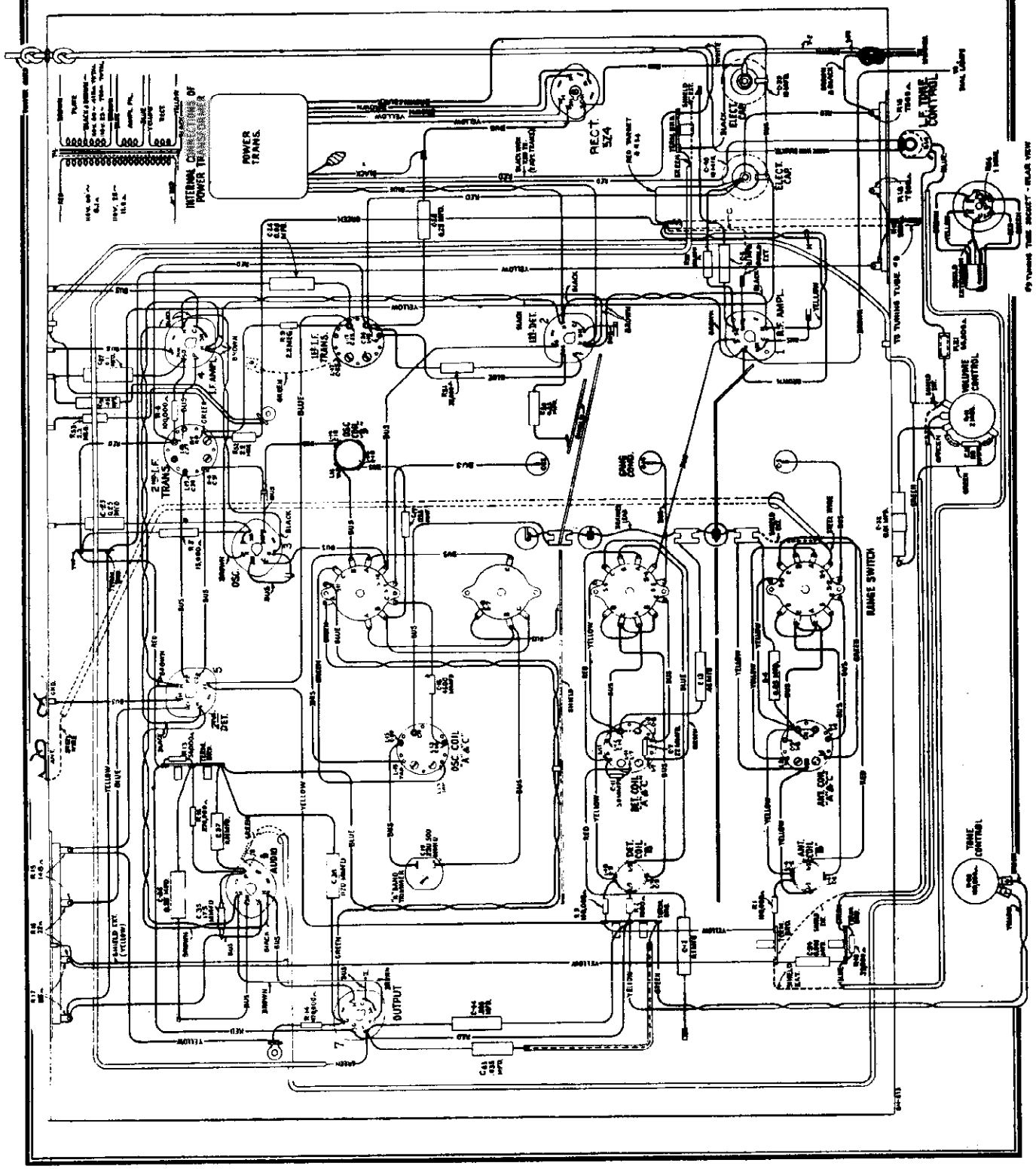

©John F. Rider, Publisher

MODELS C9-4(Late),T9-10
Parts List

RCA MFG. CO., INC.

Mechanical Specifications

	Model C9-4	Model T9-16
Height	40 inches	22¼ inches
Width	26 inches	16½ inches
Depth	12½ inches	11¾ inches
Weight (Net)	57 pounds	34 pounds
Weight (Shipping)	72 pounds	39 pounds
Chassis Base Dimensions		14½ inches x 9 inches x 3½ inches

RADIOTRON COMPLEMENT

(1) RCA-6K7.....Radio-Frequency Amplifier
(2) RCA-6L7.....First Detector
(3) RCA-6J7.....Heterodyne Oscillator
(4) RCA-6K7.....Intermediate Amplifier
(5) RCA-6H6.....Second Detector and A.V.C.
(6) RCA-6F5.....Audio Amplifier
(7) RCA-6F6.....Power Output Amplifier
(8) RCA-5Z4.....Full Wave Rectifier
(9) RCA-6E5.....Tuning Indicator

REPLACEMENT PARTS

Stock No.	Description	List Price
	RECEIVER ASSEMBLIES	
4427	Bracket—Volume control or high frequency tone control mounting bracket.	$0.18
5237	Bushing—Variable tuning condenser mounting bushing assembly—Package of 3	.45
11350	Cap—Contact cap—Package of 5	.20
11223	Capacitor—Adjustable capacitor (C19)	.46
11292	Capacitor—22 MMfd. (C7)	.24
11321	Capacitor—33 MMfd. (C33)	.26
11289	Capacitor—50 MMfd. (C11)	.26
11291	Capacitor—115 MMfd. (C21)	.24
5116	Capacitor—175 MMfd. (C35)	.18
4409	Capacitor—1120 MMfd. (C34)	.35
11288	Capacitor—1225 MMfd. (C17)	.30
11287	Capacitor—4500 MMfd. (C15)	.30
4668	Capacitor—0.005 Mfd. (C24, C44)	.20
4624	Capacitor—0.01 Mfd. (C12)	.34
4858	Capacitor—0.01 Mfd. (C37)	.25
5196	Capacitor—0.035 Mfd. (C43)	.18
4836	Capacitor—0.05 Mfd. (C4, C13, C26)	.30
4886	Capacitor—0.05 Mfd. (C31)	.20
4885	Capacitor—0.1 Mfd. (C6, C12, C27)	.28
5170	Capacitor—0.25 Mfd. (C23, C24, C36, C50)	.10
11240	Capacitor—10 Mfd. (C39)	.25
5212	Capacitor—18 Mfd. (C40)	1.08
11172	Clamp—Antenna cable clamp—Located near antenna terminal	1.16
5215	Coil—Antenna coil (A and C Bands)—(L1, L2, L5, L6, C1, C3)	.10
5245	Coil—Antenna coil (B Band)—(L3, L4, C2)	2.32
5216	Coil—Detector coil (A and C Bands)—(L7, L8, L11, L12, C8, C10)	1.58
5246	Coil—Detector coil (B Band)—(L9, L10, C9)	2.34
5217	Coil—Oscillator coil (A and C Bands)—(L13, L15, C16, C20)	1.62
5247	Coil—Oscillator coil (B Band)—(L14, C18)	2.20
11214	Condenser—Tuning variable tuning condenser (C5, C14, C22)	1.44
4340	Lamp—Dial lamp—Package of 5	4.20
8041	Plate—R.F. or I.F. coil shield locking plate—Package of 2	.60
11244	Resistor—Voltage divider resistor, comprising one 7500 ohm and one 9200 ohm section—(R18, R19)	.12
11339	Resistor—Voltage divider resistor, comprising one 148 ohm, one 32 ohm and one 85 ohm section—(R15, R16, R17)	1.08
5112	Resistor—1000 ohm—Carbon Type—¼ watt—(R2)—Package of 5	.52
5114	Resistor—15,000 ohm—Carbon Type—1 watt—(R5)	1.00
11300	Resistor—33,000 ohm—Carbon Type—1/10 watt—(R4)—Package of 5	.22
5013	Resistor—33,000 ohm—Carbon Type—1 watt—(R3)—Package of 5	.75
11322	Resistor—39,000 ohm—Carbon Type—¼ watt—(R10)—Package of 5	1.10
5039	Resistor—56,000 ohm—Carbon Type—¼ watt—(R13, R21)—Package of 5	1.00
3118	Resistor—100,000 ohm—Carbon Type—¼ watt—(R1, R3, R6, R30)—Package of 5	1.00
11323	Resistor—270,000 ohm—Carbon Type—¼ watt—(R12)—Package of 5	1.00
11172	Resistor—470,000 ohm—Carbon Type—¼ watt—(R14)—Package of 5	1.00
11151	Resistor—2.2 megohms—Carbon Type—¼ watt—(R9, R32, R33)—Package of 5	1.00
5249	Shield—Antenna, detector or oscillator coil shield	.10
5350	Shield—Intermediate frequency transformer shield	.22
11222	Socket—Dial lamp socket	.18
11195	Socket—5-contact rectifier radiotron socket	.15
11313	Socket—5-contact radiotron socket	.18
11198	Socket—7-contact radiotron socket	.15
11236	Switch—Band switch (S1, S2, S3, S4, S5, S6, S7, S8, S9, S10, S11)	2.44
5224	Switch—Tone control and power switch (S12, S14)	1.00
5238	Terminal—Antenna terminal clip assembly	.14
11238	Tone Control—High frequency tone control (R30)	.96
11216	Transformer—First intermediate frequency transformer (L16, L17, C24, C25)	2.15
11239	Transformer—Second intermediate frequency transformer (L18, L19, C29, C30, C31, R7, R8)	2.72
11803	Transformer—Power transformer — 105-125 volts—50-60 cycles (T1)	4.38
11804	Transformer—Power transformer — 105-125 volts—25-60 cycles	6.02
11805	Transformer—Power transformer — 100-130, 140-160, 195-250 volts—40-60 cycles	7.95
11237	Volume Control—(R11)	1.20
	DRIVE ASSEMBLIES	
4362	Arm—Band indicator operating arm	.28
10194	Ball—Steel ball—Package of 20	.25
4422	Clutch—Tuning condenser drive clutch assembly—comprising drive shaft, ball, ring, spring and washer—assembled	.22
11318	Dial—Dial scale	1.00
11252	Drive—Variable tuning condenser drive assembly	.68
4520	Indicator—Station selector indicator pointer	1.88
11226	Indicator—Band indicator pointer assembly—comprising indicator pointer, arm, link and stud	.18
3993	Screw—No. 6-32-5/32-in. square head set screw for band indicator operating arm—Package of 10	.20
4669	Screw—No. 8-32-5/32-in. set screw for variable condenser drive assembly—Package of 10	.25
4377	Spring—Band indicator operating arm spring—Package of 5	.25
4378	Stud—Band indicator operating arm stud and nut assembly—Package of 5	.25
	REPRODUCER ASSEMBLIES Table Model	
11232	Board—Terminal board with two lead wire clips	.18
11231	Bolt—Yoke and core assembly bolt and nut	.16
8060	Bracket—Output transformer mounting bracket	.14
11257	Clamp—Cone center suspension clamping nut and screw assembly—Package of 5	.25
11254	Coil—Field coil (L20)	2.00
11233	Coil—Neutralizing coil (L21)	.30
11235	Cone—Reproducer cone—(L22)—Package of 5	3.50
5119	Connector—3-contact female connector for reproducer cable	.25
5118	Connector—3-contact male connector for reproducer	.25
9618	Reproducer—Complete	6.40
11253	Transformer—Output transformer (T2)	1.56
11886	Washer—Spring washer used to hold field coil securely—Package of 5	.20
	REPRODUCER ASSEMBLIES Console Models	
11232	Board—Terminal board assembly with two lead wire clips	.18
11231	Bolt—Yoke and core assembly bolt and nut	.16
8060	Bracket—Output transformer mounting bracket	.14
11257	Clamp—Cone center suspension clamping nut and screw assembly—Package of 5	.25
11254	Coil—Field coil (L20)	2.00
11233	Coil—Neutralizing coil (L21)	.30
11235	Cone—Reproducer cone—(L22)—Package of 5	3.50
5119	Connector—3-contact female connector for reproducer cable	.25
5118	Connector—3-contact male connector for reproducer	.25
9618	Reproducer—Complete	6.40
11253	Transformer—Output transformer (T2)	1.56
11886	Washer—Spring washer used to hold field coil securely—Package of 5	.20
	MISCELLANEOUS ASSEMBLIES	
11996	Bracket—Tuning tube mounting bracket and clamp assembly	.22
11331	Cable—Tuning lamp cable—complete with socket	1.28
11276	Escutcheon—Tuning lamp escutcheon	.40
11337	Escutcheon—Station selector escutcheon	.70
6614	Glass—Station selector dial glass	.30
11346	Knob—Station selector knob—Package of 5	.75
11347	Knob—Volume control, tone control, range switch or power switch knob—Package of 5	.75
11246	Foot—Chassis mounting foot and bracket assembly—Package of 2	.76
11382	Resistor—1 megohm—Carbon Type—1/10 watt (R34)—Package of 5	.75
4678	Ring—Spring retaining ring for dial glass—Package of 5	.34
5210	Screw—Chassis mounting screw assembly—for console model—Package of 4	.16
11210	Screw—Chassis mounting screw assembly—for table model—Package of 4	.28
11348	Screw—No. 8-32-7/16-in. headless cup-ped point set screw for knob, Stock No. 11346—Package of 10	.32
11381	Socket—Tuning lamp socket and cover	.45
11349	Spring—Retaining spring for knob, Stock No. 11347—Package of 5	.15

The prices quoted above are subject to change without notice.

©John F. Rider, Publisher

MODELS C9-6,T9-9
Schematic

RCA MFG. CO., INC.

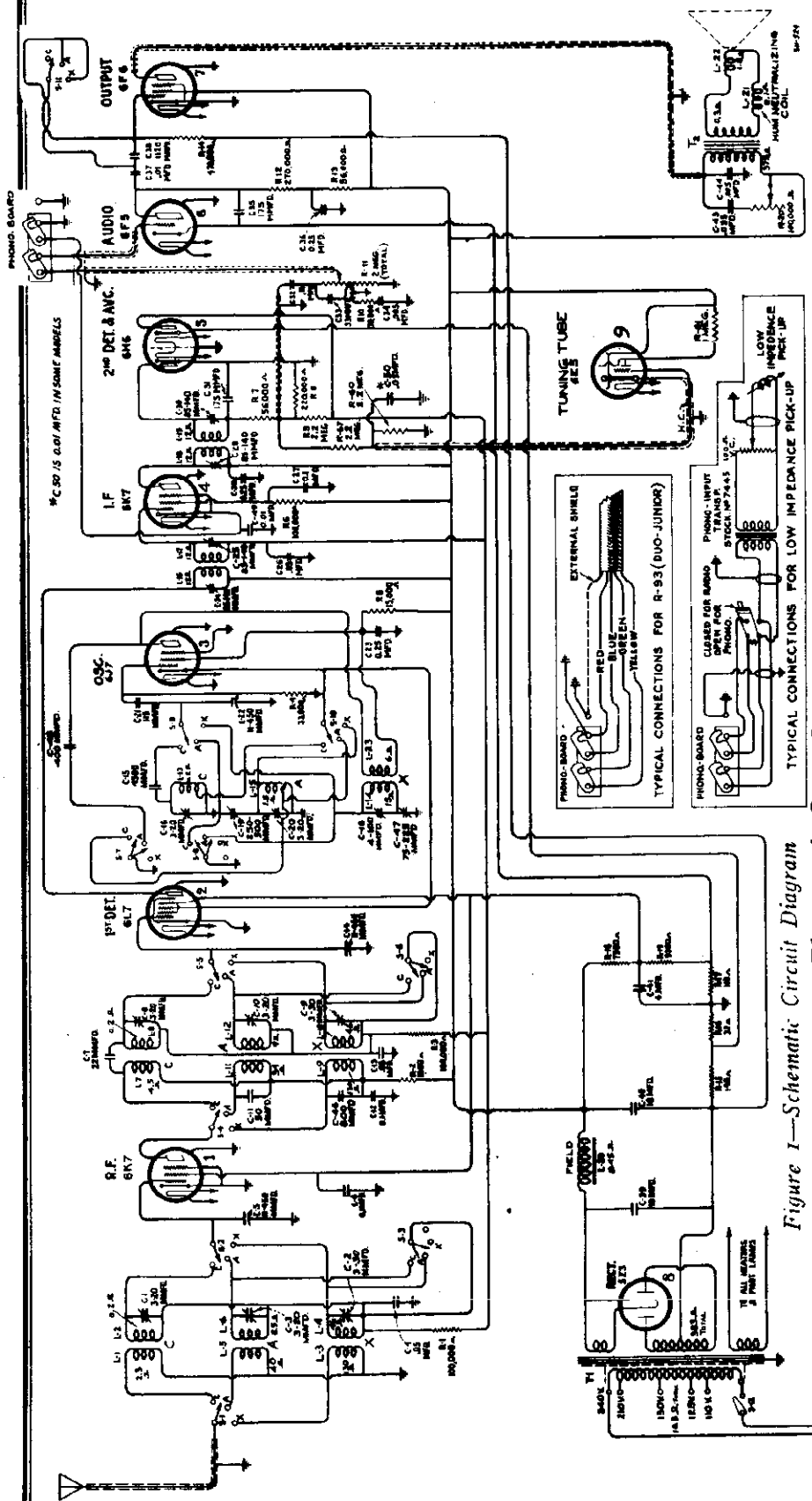

Figure 1—Schematic Circuit Diagram

Electrical Specifications

Frequency Ranges

Band X	140 kc.—	410 kc.
Band A	540 kc.—	1,800 kc.
Band C	5,700 kc.—	18,000 kc.

Intermediate Frequency ..... 460 kc.

Power Supply Ratings

Rating A	105—125 volts, 50—60 cycles, 105 watts
Rating B	105—125 volts, 25—60 cycles, 105 watts
Rating C	100—130/140—160/195—250 volts, 40—60 cycles, 105 watts

Loudspeaker

Type	Electrodynamic
Voice Coil Impedance	2¼ Ohms at 400 Cycles

Alignment Frequencies

Band X	150 kc. (osc.), 400 kc. (osc., ant., det.)
Band A	600 kc. (osc.), 1,720 kc. (osc., ant., det.)
Band C	18,000 kc. (osc., ant., det.)

Power Output Ratings

Undistorted	2 Watts
Maximum	4½ Watts

©John F. Rider, Publisher

MODELS C9-6, T9-9
Chassis Wiring

RCA MFG. CO., INC.

Mechanical Specifications

	Model C 9-6		Model T 9-9	
Height	40	inches	22 13/16	inches
Width	26	inches	16 1/2	inches
Depth	12 1/2	inches	11 7/8	inches
Weight (Net)	55	pounds	39	pounds
Weight (Shipping)	72	pounds	50	pounds
Chassis Base Dimensions	14 1/2 inches x 9 inches x 3 1/2 inches			

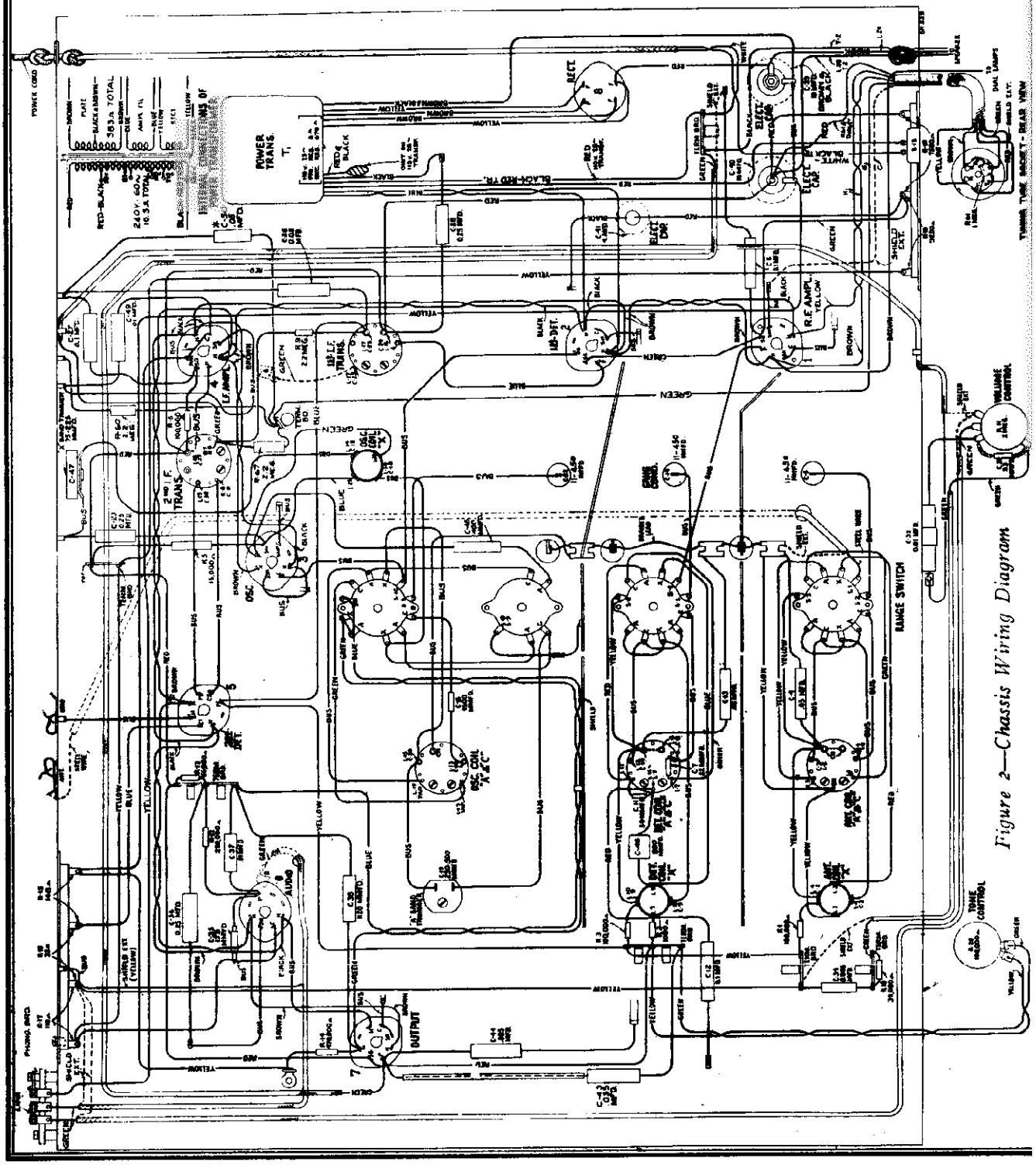

Figure 2—Chassis Wiring Diagram

©John F. Rider, Publisher

MODELS C9-6,T9-9
Socket,Voltage
Trimmers,Speaker
Transformer

RCA MFG. CO., INC.

Standard Transformer

The transformer used on some models of this instrument is adaptable for voltages and frequencies as given under Ratings A and B of Electrical Specifications. Its schematic and wiring are shown by Figure 7.

Phonograph Attachment

A terminal board is provided for connecting a phonograph attachment into the audio amplifying circuit. Two typical methods of connection are shown on the schematic diagram, Figure 1. The radio volume control must be set to minimum when using phonograph.

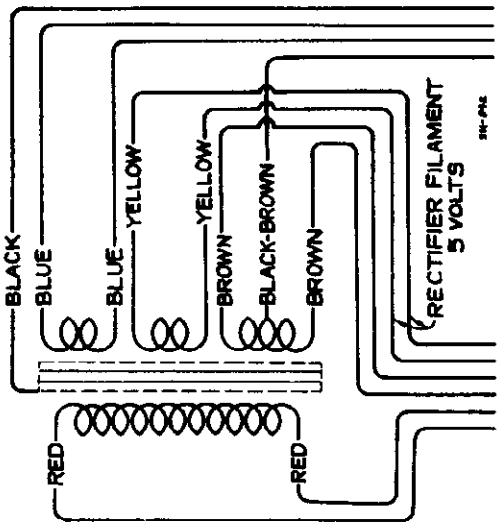

Figure 7—Standard Power Transformer Connections

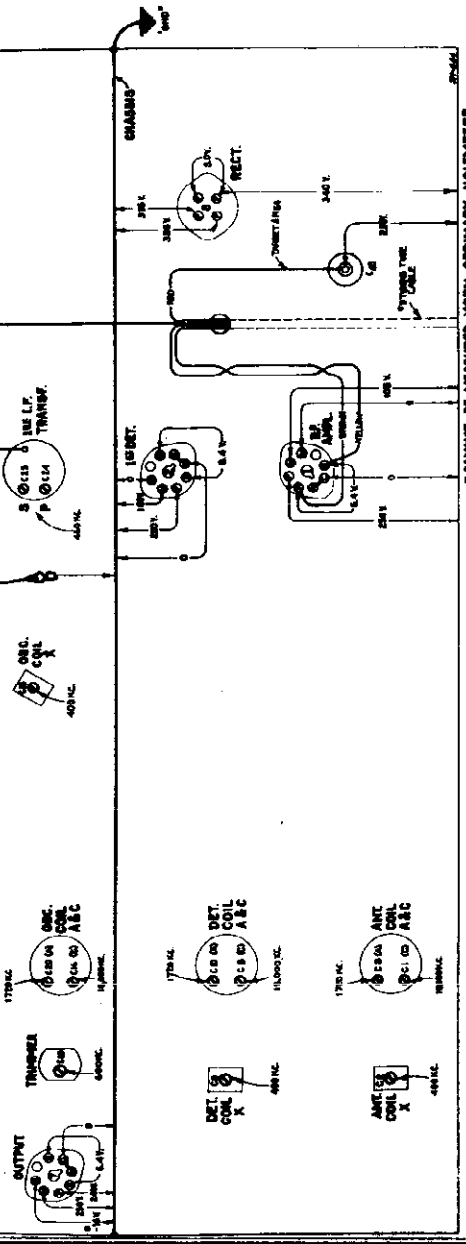

Figure 6—Radiotron Socket Voltages and Trimmer Locations

Measured at 115 volts, 60 cycle supply—No signal being received

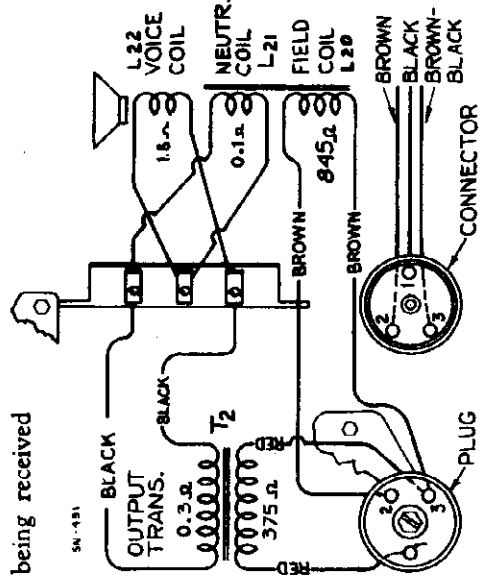

Figure 5—Loudspeaker Wiring

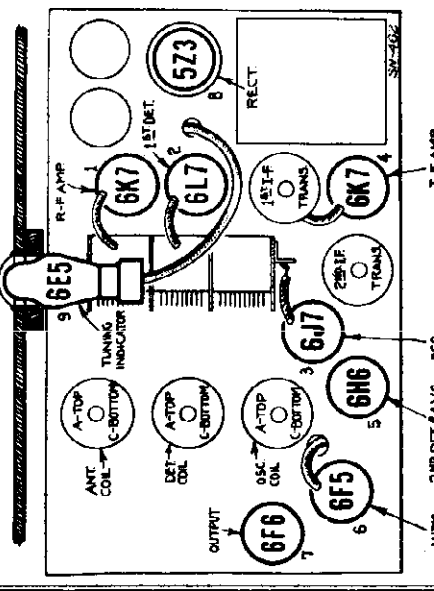

Figure 3—Radiotron and Coil Locations

©John F. Rider, Publisher

RCA MFG. CO., INC.

MODELS C9-6,T9-9
Circuit Data
Alignment

General Features

These two models each employ the same nine-tube chassis. The table model (T 9-9) uses an 8-inch dynamic speaker and the console model (C 9-6) uses an improved 12-inch dynamic speaker.

Metal Tubes

The new metal tubes are used in the radio receiver for amplifying and detecting purposes. These tubes make possible a greater range of stable amplification not previously attainable with corresponding glass types. Their metal envelopes form a perfect electrostatic and electromagnetic shield, precluding the former necessity for elaborate shielding by means of cans. The metal tubes are especially adaptable to the modern, extended-range receivers because of their efficient shielding and their favorable internal characteristics.

Dial Drive

An open face airplane-type of dial is used. Each scale has a band of color adjacent to its graduations and three short strips of corresponding colors at the lower part of the dial for index purposes. An index pointer, which moves as the band switch is rotated, points to one of these colors to identify the band in use. The drive mechanism is variable, there being either a 50-to-1 or 10-to-1 ratio available between the tuning knob and condenser drive shaft.

Tuning Indicator

A cathode-ray tube is used as a means of visually indicating when the receiver is accurately tuned to the incoming signal. This tube is of new design and comprises an amplifier section and a cathode-ray section built in the same glass envelope. The cathode-ray section consists of a conically shaped luminescent screen, upon which a pattern is formed by an effect of the detected signal after said effect has been amplified by the amplifier section which is fed from the detector diode circuit. The size of the pattern is determined by the strength of the signal voltage, so that any change of tuning may be readily observed in order to facilitate tuning to exact resonance.

CIRCUIT FEATURES

The circuit is based upon the Superheterodyne principle. The three ranges of tuning are covered by three sets of coils. A single r-f stage provides the desired selectivity and gain ahead of the hexode first-detector tube. The oscillator stage operates separately from the first detector. A single stage i-f system is employed. Its basic frequency is 460 kc. Diode detection is performed by a double diode RCA-6H6 Radiotron. Automatic volume control is provided by this same tube. The audio system consists of two stages, the driver, an RCA-6F5, and the output, an RCA-6F6. High voltages for plate, screen, and bias supplies are obtained from an RCA-5Z3 full-wave rectifier through an efficient filter. The field of the loudspeaker acts as a reactor in the filter circuit. Further details of the circuit are as follows:

Oscillator

The oscillator circuit has extreme stability of frequency and good uniformity of output over the tuning ranges. These qualities assure that the tuning of the receiver will not drift as the line voltage varies. The action of the circuit is such that when the cathode emission tends to change with line voltage or because of other reasons, the variation of voltage drop in the plate and screen resistor restores the operating characteristics of the tube to normal and thus maintains constancy of the generated signal.

First Detector

This stage has unusually good high frequency mixing efficiency. The tube used, an RCA-6L7, is a new hexode type. The signal is supplied to the first control-grid and the oscillator voltage is fed in on a second control-grid, a screen-grid separating the two. The arrangement of the grids prevents degeneration difficulties, particularly at the higher frequencies. The second grid is direct-connected to the cathode of the oscillator and has no d-c bias.

Compensated Volume Control

The variation in response of the human ear with different degrees of volume is compensated for by a resistor and condenser network in the manual volume control circuit. The volume control itself is an accurately tapered potentiometer which provides equal changes of sound intensity for the listener per degree of rotation.

Range Switch

The band-change switch has several functions. It exchanges the antenna, detector, and oscillator coils in order to select the range desired. At the same time, it shorts out the unused coils so as to eliminate their absorptive effects. It also varies the fidelity by shorting a coupling condenser in the audio system to provide the desired reproduction for short-wave as well as long-wave reception.

Tone Control

Provision is included for variable reduction of high frequencies. This consists of a resistor and condenser combination across the primary winding of the output transformer, the resistor being the variable element. As it is decreased, the high-frequency response limit is lowered.

Power System

The power transformer has its primary winding capacitively shielded from its secondary windings to eliminate transfer of line disturbances into the receiver and to stop any tendency for the circuit to radiate into the line. Rectification is performed in the usual manner by a full-wave tube.

Detection and A.V.C.

The modulated signal as obtained from the output of the i-f system is detected by an RCA-6H6 twin diode tube. The audio frequency secured by this process is passed on to the a-f system for amplification and final reproduction. The d-c voltage which results from detection of the signal is used for automatic volume control. This voltage, which develops across resistor R-8, is applied as automatic control-grid bias to the r-f, first-detector, and i-f tubes through suitable resistance-capacitance filter circuits. The second diode of the RCA 6H6 is used to supply residual bias for these controlled tubes under conditions of little or no signal. This diode, under such conditions, draws current, which flows through R-9 and R-8, thereby maintaining the desired minimum operating bias on such tubes. On application of signal energy above a certain level, however, the auxiliary bias diode ceases to draw current and the a.v.c. diode takes over the biasing function.

SERVICE DATA

The various diagrams of this booklet contain such information as will be needed for servicing the receiver. The ratings of all resistors, capacitors, coils, etc., are indicated adjacent to the symbols signifying these parts on the diagrams. The coils, reactors, and transformer windings are rated in terms of their d-c resistances only. Ratings of less than one ohm are generally omitted. Identification titles such as R-3, L-2, C-1, etc., are provided for reference between the illustrations and replacement parts.

Alignment Procedure

The extensive frequency range of this receiver necessitates a more or less involved method of alignment. However, if the following directions are carefully applied, the normal performance of the instrument will be obtained.

Correct performance of the receiver can only be obtained when the trimmer adjustments have been made by a skilled service man with the use of adequate and reliable test equipment. Such apparatus as may be required for this particular instrument is illustrated and described on a separate page of this booklet.

Two methods of alignment are applicable. One utilizes a Cathode-Ray Oscillograph as a means of output indication and the other follows former procedure where a glow type indicator or meter is used. The oscillographic method is much to be preferred, since greater accuracy is possible from the type of indication afforded. There are no approximations necessary as with the meter or aural method, but each adjustment can be made with excellent precision. Both methods are hereinafter outlined so that alignment operations may be made according to the equipment available.

It is wise to determine the necessity for alignment as well as the direction of misalignment before making adjustments. The RCA Tuning Wand is an instrument designed particularly for such a purpose.

The Tuning Wand consists of a bakelite rod having a small brass cylinder at one end and a core of finely divided iron at the other. It may be inserted into a tuned coil while a signal of the normal resonant frequency is being supplied to such coil to obtain an indication of the tuning. Holes are provided at the top of the r-f shield cans for entrance of the Wand. The presence of either end of the Wand will cause a change in tuning which will be indicated at the receiver output as an increase or decrease in signal level. If there is a decrease of output when either end is inserted, the tuning is correct and will require no adjustment. However, should there be an increase of output due to the iron core and decrease with the brass cylinder, an increase in inductance or capacitance is indicated as necessary to bring the circuit into line. The trimmer involved should therefore be increased accordingly. If the brass cylinder end causes an increase in output while the iron end causes a decrease, reduction of inductance will be necessary to place the circuit in alignment. This is equivalent to decreasing the trimmer concerned. The following tabulation gives the various changes and the adjustments required:

WAND	SIGNAL	TRIMMER
Brass	Decrease	None
Iron	Decrease	
Brass	Increase	Decrease
Iron	Decrease	
Brass	Decrease	Increase
Iron	Increase	

CATHODE-RAY ALIGNMENT

Equipment

A standard source of the specified alignment frequencies is required. Such a source should consist of an **RCA Full Range Oscillator, Stock No. 9595.** Output indication should be by means of an **RCA Stock No. 9545 Cathode-Ray Oscillograph.** An **RCA Stock No. 9538 Frequency Modulator** will be needed to sweep the generated signal and synchronize it with the Oscillograph in order to make possible the visual representation of the response characteristic of the circuit being tuned on the cathode-ray fluorescent screen.

I-F Trimmer Adjustments

The four trimmers of the two i-f transformers are located as shown by Figure 6. Each must be aligned to a basic frequency of **460 kc.** The last transformer must be aligned firstly and the first transformer aligned secondly. For such a process, it is necessary to feed the output of the Full-Range Oscillator to the stages in their order of alignment, adjusting the trimmers of each transformer and observing the effect at the second detector output on the Cathode-Ray Oscillograph. The proper point of connection of the Oscillograph is with its vertical "high" input terminal attached to the junction of R-7, R8 and R9 as illustrated in Figure 6, and with the "O" or ground terminal to the chassis. The "Ext. Sync." terminals of the Oscillograph should be connected to the Frequency Modulator as shown by Figure 4. A .001 mfd. capacitor installed in series with the Oscillator "Ant." lead will prevent the voltages of the stage under alignment from becoming upset. The vertical "A" amplifier should be "On" for the ensuing adjustments and the gain control kept at its maximum position. For each adjustment, the Oscillator output need be regulated so that the image obtained on the Oscillograph screen will be of sufficient size to be accurately observable. Proceed further as follows:

(a) Place the receiver, Oscillograph and test Oscillator in operation. Set the receiver range switch to Band "A" and tune the station selector to a point where no interference will be picked up, shorting the antenna and ground terminals if necessary. Set the Oscillograph horizontal "B" amplifier to "Timing" and control its gain so that the luminescent spot sweeps a straight line trace completely across the screen. Place the timing control to "Int." Adjust the intensity and focusing controls of the Oscillograph to produce the correct size and strength of the spot.

(b) Attach the output of the test Oscillator between the control grid cap of the **RCA-6L7** r-f tube and chassis ground as shown typically by Figure 4. Tune the Oscillator to **460 kc.** and set its modulation switch to "On". Regulate its output until the signal produces a wave pattern on the Oscillograph screen, adjusting the Oscillograph controls to give the desired number of cycles. Cause the image to stand still on the screen by manipulation of the frequency and synchronizing controls. Then carefully tune the two trimmers **C-20** and **C-30** of the second i-f transformer to produce maximum amplitude (vertical deflection) of the oscillographic image. Under this condition the transformer will be sharply resonated to **460 kc.**

(c) The Frequency Modulator should then be placed in operation and interconnected with the Full-Range Oscillator by means of the special shielded patch cord. Figure 4 shows the proper arrangement. Set the Frequency Modulator sweep range switch to its "Lo" position and turn the Oscillator modulation switch to "Off". Change the timing control of the Oscillograph to "Ext." and place the range switch to its No. 2 position. Then carefully shift the tuning of the Oscillator so as to increase its frequency, until two distinct and similar waves appear on the Oscillograph screen and become exactly coincident at their highest points. These curves will be found to occur at an Oscillator setting of ***approximately* 540 kc.** They will be identical in shape but appearing in reversed positions. Adjust the frequency control of the Oscillograph in order to cause the waves to conform with the above requirements and to make them remain motionless on the screen. This will require a setting of approximately ½ clockwise rotation of the frequency control. The trimmers **C-29** and **C-30** should then be re-adjusted so that the two curves move together and become exactly coincident throughout their lengths, maintaining the maximum amplitude at which this condition can be brought about.

(d) Leaving the equipment connected and adjusted as in (c), change the Oscillator output to the control-grid cap of the RCA-6L7 first-detector tube. Then adjust the first i-f transformer trimmers **C-24** and **C-25** so that the forward and reverse waves appearing on the Oscillograph coincide throughout their lengths and have maximum amplitude. The shape of the composite wave obtained from this operation is a true representation of the overall tuning characteristic of the i-f system. Each trimmer of the entire group should then be checked to assure that it is in correct alignment as indicated by the degree of coincidence and relative amplitude of the image on the Oscillograph screen.

R-F Trimmer Adjustments

Locations of the various antenna, detector and oscillator coil trimmers are shown by Figure 6. The test Oscillator should be removed from connection with the i-f system and its output connected to the antenna-ground terminals of the receiver. No changes are to be made in the connections of the Oscillograph at the second detector. During the following adjustments, the Oscillator output should be regulated as often as is necessary to keep the oscillographic image as low as is practically observable. Adherence to such a procedure will obviate the broadness of tuning that would result from a a.v.c. action on a stronger signal. Proceed with the adjustments as follows:

Calibration

Set the receiver range switch to Band A and rotate the station selector until the tuning condenser plates are in ***full mesh*** (maximum capacitance). Then move the main dial pointer until it points exactly to the ***horizontal*** line at the low frequency end of the Band A scale.

Band A

(a) With the receiver range switch in its Band A position, tune the station selector until the dial pointer is at a reading of 1,720 kc. Adjust the test Oscillator to 1,720 kc. (modulation "On" and Frequency Modulator disconnected) and increase its output to produce a registration on the Oscillograph. Carefully align the oscillator, detector, and antenna trimmers **C-20, C-10** and **C-3** respectively, so that each brings about maximum amplitude of output as shown by the wave on the Oscillograph. It will be necessary to have the timing control of the Oscillograph on "Int." for this operation. After each trimmer has been peaked, the Oscillograph timing control should be set to "Ext." and the Frequency Modulator placed into operation with its connections to the Oscillator and Oscillograph made in accordance with Figure 4. Turn the modulation switch of the Oscillator to "Off" and retune the Oscillator (increase frequency) until the forward and reverse waves show on the Oscillograph and become coincident at their highest points. Adjust the trimmers **C-20, C-10** and **C-3** again, setting each to the point which produces the best coincidence and maximum amplitude of the wave images.

(b) Remove the Frequency Modulator cable from the Oscillator and shift the signal frequency to **600 kc.** Place the modulation switch to "On". Tune the receiver to pick up this signal, disregarding the dial reading at which it is best received. Then insert the Frequency Modulator plug and retune the Oscillator (modulation "Off") until the two similar forward and reverse waves appear on the screen. For this adjustment, it is advisable to shift the Oscillator to its 200—600 kc range and use the third harmonic of the generated signal in order to obtain the desired range of sweep. The oscillator series trimmer C-19 should then be adjusted to produce maximum amplitude of the images. No rocking will be necessary on the station selector inasmuch as the signal frequency is being "wobbled" by the Frequency Modulator to produce the same effect.

After completing this adjustment, the trimmer **C-20** should be realigned as in (a) to correct for any change brought about by the adjustment of **C-19.**

Band X

(a) Disconnect the Frequency Modulator and tune the test Oscillator to a frequency of **400 kc.** (Modulation "On".) Place the receiver range switch to its Band X position and tune the station selector until the dial pointer reads exactly **400 kc.** Adjust the Oscillograph timing control to "Int." Then align each of the trimmers **C-18, C-9** and **C-2** to the point producing maximum output at the Oscillograph. Place the Frequency Modulator in operation and attach it to the test Oscillator by means of the shielded cable. Change the Oscillograph timing to "Ext." Increase the frequency of the Oscillator (Modulation "Off") until the two forward and reverse waves appear and become coincident at their highest point, ***approximately* at 462 kc.** These waves may be made to remain stationary on the screen by manipulation of the Oscillograph range switch (No. 2 position) and frequency control (mid-position). Readjust the three trimmers **C-18, C-9** and **C-2** to give maximum amplitude and complete coincidence of the waves.

(b) Change the test Oscillator so that it delivers a signal of **150 kc.** with the Frequency Modulator disconnected. Tune this signal on the receiver, which should be set to the Band X setting, disregarding the dial reading at which the signal is best received. Then reconnect the Frequency Modulator with the Oscillator and retune the latter to the point at which the two similar waves appear on the screen. Adjust the trimmer **C-17** for maximum amplitude of the wave images. Rocking of the tuning condenser will not be necessary for this operation as such is duplicated by the Frequency Modulator. Repeat the alignment of **C-18** as in (a) to correct for any error brought about by the adjustment of **C-17.**

Band C

(a) Turn the range switch of the receiver to its Band C position and tune the station selector until the dial pointer reads **18,000 kc.** Set the test Oscillator to **18,000 kc.** (modulation "On" and Frequency Modulator disconnected) and regulate its output to the level required for convenient observation. Adjust the trimmer **C-16** to the point producing maximum output as indicated on the Oscillograph. Check for the presence of the proper "image" signal by tuning the receiver to **17,080 kc.** The **18,000 kc.** signal of the Oscillator will be received at this point if the adjustment of C-16 has been properly made using the position of least capacitance which gives maximum receiver output. It may be necessary to increase the output of the Oscillator in order to get an indication of the "image". ***No adjustments should be made during this check.***

(b) Return the receiver tuning to **18,000 kc.,** realign **C-16** if necessary, and then adjust the detector and antenna trimmers, **C-3** and **C-1,** for maximum signal output as evidenced by the oscillographic image. No further adjustments are to be made on this band.

OUTPUT INDICATOR ALIGNMENT

To align the receiver by means of an output indicator other than a Cathode-Ray Oscillograph will require the use of a standard test Oscillator such as that recommended above for the source of signals and means of indication for the output. The **RCA Neon Output Indicator, Stock No. 4317** will be found very satisfactory for such use. It should be connected across the voice coil circuit of the loudspeaker or across the output transformer primary.

I-F Alignment

Connect the test Oscillator to the control-grid cap of the i-f tube. Advance the volume control of the receiver to its full-on position. Tune the test Oscillator to **460 kc.** and align the trimmers **C-29** and **C-30** to give maximum receiver output. Regulate the Oscillator output during this adjustment so that the output indication is as small as can be conveniently observed. After completing the adjustments of these trimmers, reconnect the Oscillator so that it will feed into the control-grid circuit of the **RCA-6L7** first detector. Then tune the first i-f transformer trimmers **C-24** and **C-25** for maximum receiver output.

R-F Alignment

After completing the i-f adjustments, it is advisable to correct the line-up of the circuits ahead of the first detector. The test Oscillator should be connected to the antenna-ground terminals of the receiver and the manual volume control kept at its maximum position. For each adjustment the Oscillator output should be maintained as low as possible in order to avoid broadness of tuning which would result from a a.v.c. action on a stronger signal. **Band A** should be aligned by supplying a **1,720 kc.** signal to the receiver, tuning the station selector to a dial reading of **1,720** and adjusting the trimmers **C-20, C-10** and **C-3** to produce maximum receiver output. The Oscillator should then be shifted to **600 kc.** and the receiver tuned to resonate this signal, disregarding the reading at which it is best received. Trimmer **C-19** must then be adjusted, simultaneously while rocking the station selector backward and forward through the signal until the maximum output results from the combined operations. **C-20** should be rechecked to assure that no adjustment has not changed because of the trimming of C-19. Band X must be aligned at **400 kc.** and **150 kc.** Tune the test Oscillator to **400 kc.** and turn the receiver dial to the same reading. Adjust trimmers **C-18, C-9** and **C-2** for maximum (peak) receiver output. Then shift the Oscillator to **150 kc.,** and tune the receiver to pick up this signal, disregarding the dial reading at which it is best received. Adjust trimmer **C-17,** simultaneously rocking the tuning condenser backward and forward through the signal, until maximum receiver output results from the combined operations. Repeat the alignment of **C-18** as above to correct for any change which may have been caused by the adjustment of **C-17.** Change the receiver so that it is operative and the dial reads **18,000 kc.** on the "C" **Band.** Tune the test Oscillator to **18,000 kc.** Then adjust the oscillator trimmer **C-14** to produce maximum (peak) output. Two positions of this trimmer will be found which conform with this requirement. The one of least capacitance is correct. Check for the presence of "image" response at **17,080 kc.** by shifting the receiver tuning. If it is received at such a point, the trimmer **C-16** has been correctly adjusted to the right point. ***No adjustments are to be made during this check.*** Tune the receiver back to the **18,000 kc.** dial marking, readjust **C-16** if necessary, and then tune the detector and antenna capacitors **C-1** and **C-3** for maximum receiver output. No further adjustments are necessary.

©John F. Rider, Publisher

MODELS C9-6, T9-9
Visual Alignment
Parts List

RCA MFG. CO., INC.

Radiotron Socket Voltages

The voltage values indicated from the Radiotron socket contacts to chassis on Figure 6 will serve to assist in the location of causes for faulty operation. Each value as specified should hold within ± 20% when the receiver is normally operative at its rated supply voltage. Variations in excess of this limit will usually be indicative of trouble in the basic circuits. The voltages given are actual operating values and do not allow for inaccuracies which may be caused by the loading effect of a voltmeter's internal resistance. This resistance should be duly considered for all readings. The amount of circuit resistance shunting the meter during measurement will determine the accuracy to be obtained, the error increasing as the meter resistance becomes comparable to or less than the circuit resistance. For the majority of readings, a meter having an internal resistance of 1,000-ohms-per-volt will be satisfactory when the range used for each reading is chosen as high as possible consistent with good readability.

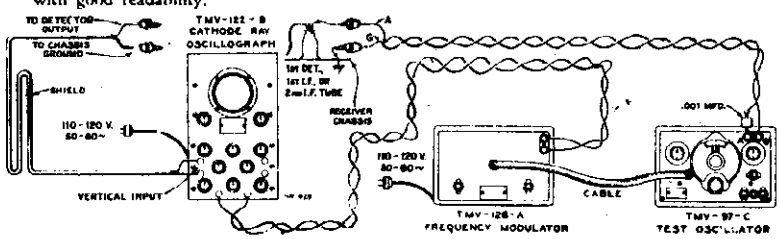

Figure 4—Alignment Apparatus Connections

REPLACEMENT PARTS

Stock No.	DESCRIPTION	List Price	Stock No.	DESCRIPTION	List Price
	RECEIVER ASSEMBLIES			Resistor—39,000 Ohm—Carbon type—½ Watt—(R10)—Package of 5	$1.00
11698	Board—Three-terminal phonograph terminal board	$0.22	11322	Resistor—56,000 Ohm—Carbon type—½ Watt—(R13)—Package of 5	1.00
4427	Bracket—Volume control or high-frequency tone control mounting bracket	.18	5029	Resistor—100,000 Ohm—Carbon type—¼ Watt—(R1, R3, R6)—Package of 5	1.00
5237	Bushing—Variable tuning condenser mounting bushing assembly—Package of 3	.43	3118	Resistor—270,000 Ohm—Carbon type—½ Watt—(R12)—Package of 5	1.00
11350	Cap—Contact cap—Package of 5	.20	11323	Resistor—470,000 Ohm—Carbon type—½ Watt—(R14)—Package of 5	1.00
11223	Capacitor—Adjustable capacitor (C19)	.46	11172	Resistor—2.2 Megohms—Carbon type—½ Watt—(R9, R60, R67)—Package of 5	1.00
11236	Capacitor—Adjustable capacitor (C-47)	.48	11151	Shield—Antenna, detector, or oscillator coil shield	.20
11292	Capacitor—22 MMfd. (C7)	.24	5249	Shield—I.F. transformer shield	.22
11321	Capacitor—33 MMfd. (C33)	.26	5250	Shield—Rectifier Radiotron shield	.21
11289	Capacitor—50 MMfd. (C11)	.26	11273	Socket—Dial lamp socket	.18
11291	Capacitor—115 MMfd. (C21)	.24	11222	Socket—Four-contact rectifier Radiotron socket	.15
5116	Capacitor—175 MMfd. (C35)	.18	4794	Socket—Five-contact Radiotron socket	.15
11290	Capacitor—400 MMfd. (C48)	.25	11313	Socket—Seven-contact Radiotron socket	.18
11269	Capacitor—800 MMfd. (C45)	.30	11198	Switch—Band switch (S1, S2, S3, S4, S5, S6, S7, S8, S9, S10, S11)	.15
4409	Capacitor—1120 MMfd. (C38)	.35	11236	Switch—Power switch ($12)	.20
11287	Capacitor—4500 MMfd. (C15)	.30	4838	Terminal—Antenna terminal clip assembly	.62
4868	Capacitor—.005 Mfd. (C34)	.20	5238	Tone Control—High-frequency tone control (R20)	.14
4838	Capacitor—.005 Mfd. (C44)	.20	11238	Transformer—First intermediate frequency transformer (L16, L17, C24, C25)	.96
4624	Capacitor—.01 Mfd. (C32)	.54	11216	Transformer—Second intermediate frequency transformer (L18, L19, C29, C30, C31, R7, R8)	2.15
4838	Capacitor—.01 Mfd. (C37, C49)	.25	11239	Transformer—Power transformer—105-125 Volts—25-50 Cycles	2.72
5196	Capacitor—.035 Mfd. (C43)	.18	11133	Transformer—Power transformer—100-130, 140-160, 195-250 Volts—40-60 Cycles—(T1)	6.52
4886	Capacitor—.05 Mfd. (C50)	.20	5238	Volume control (R11)	4.64
4836	Capacitor—.05 Mfd. (C4, C13, C26)	.30	11238		1.20
4885	Capacitor—.01 Mfd. (C6, C12, C27)	.28	11242		.12
5170	Capacitor—.025 Mfd. (C23, C28, C36)	.25	11216		.40
11248	Capacitor—4 Mfd. (C41)	1.06	11243		.70
11240	Capacitor—10 Mfd. (C39)	1.08	11237		.12
5212	Capacitor—18 Mfd. (C40)	1.16			.40
11272	Clamp—Antenna cable clamp—Located near antenna terminal	.10	11276		.70
4748	Clamp—Capacitor mounting clamp assembly—for Stock No. 11248	$0.15	11319		1.38
5215	Coil—Antenna coil (A and C Bands)—(L1, L2, L5, L6, C1, C3)	2.32	11331		1.28
11325	Coil—Antenna coil (X Band)—(L3, L4, C2)	1.56	11192		.12
5216	Coil—Detector coil (A and C Bands)—(L7, L8, L11, L12, C8, C10)	2.34	11276		.40
11326	Coil—Detector coil (X Band)—(L9, L10, C9)	1.60		**DRIVE ASSEMBLIES**	
5217	Coil—Oscillator coil (A and C Bands)—(L13, L15, C16, C20)	2.20	11337		.28
11327	Coil—Oscillator coil (X Band)—(L14, L23, C18)	1.44	11246		.25
11214	Condenser—Three-gang variable tuning condenser (C5, C14, C22)	4.20	5614		.76
11697	Cover—Phonograph terminal board cover	.12	11347		.30
4340	Lamp—Dial lamp—Package of 5	.60	11346		.75
8041	Plate—R.F. or I.F. coil shield locking plate—Package of 2	.12	11362		1.00
11244	Resistor—Voltage divider resistor, comprising one 7500-ohm and one 9200-ohm sections (R18, R19)	1.08	11352		.75
11245	Resistor—Voltage divider resistor, comprising one 148-ohm, one 32-ohm, and one 110-ohm section (R15, R16, R17)	.62	4520		.75
5112	Resistor—1000 Ohm—Carbon type—¼ Watt—(R2)—Package of 5	1.00	11236		.18
5114	Resistor—15,000 Ohm—Carbon type—1 Watt—(R5)	.22	3993		.20
11300	Resistor—33,000 Ohm—Carbon type—1/10 Watt—(R4)—Package of 5	.75	4668		.25
			4377		.25
			4378		.25
			11322	Board—Terminal board assembly with two lead wire clips	$0.18
			11231	Bolt—Yoke and core assembly bolt and nut	.16
			8060	Bracket—Output transformer mounting bracket	.14
			11257	Clamp—Cone center suspension clamping nut and screw assembly—Package of 5	.25
			11244	Coil—Field coil (L20)	2.00
			11233	Coil—Neutralizing coil (L21)	.30
			11235	Cone—Reproducer cone (L22)—Package of 5 (table model)	3.50
			11258	Cone—Reproducer cone (L22)—Package of 5 (console model)	3.85
			5119	Connector—Three-contact female connector plug for reproducer cable	.25
			5118	Connector—Three-contact male connector for reproducer	.25
			9618	Reproducer—Complete (table model)	6.40
			9619	Reproducer—Complete (console model)	6.05
			11253	Transformer—Output transformer (T2)	1.56
			11230	Washer—"Binder's board" "C" washer—Used to hold field coil securely—Package of 5	.18
				MISCELLANEOUS ASSEMBLIES	
			11729	Bolt—Reproducer mounting bolt assembly—Comprising one bolt, one washer, one lockwasher and one nut—Package of 2 (table model)	.20
			11191	Bracket—Tuning tube mounting bracket—less clamp	.12
			11319	Cable—Tuning tube cable complete with socket (table model)	1.38
			11331	Cable—Tuning tube cable complete with socket (console model)	1.28
			11192	Clamp—Tuning tube mounting clamp—less bracket	.12
			11276	Escutcheon—Radiotron tuning tube escutcheon	.70
			11337	Escutcheon—Station selector escutcheon	.76
			11246	Foot—Chassis mounting foot and bracket assembly—Package of 2	.30
			5614	Glass—Station selector dial glass	
			11347	Knob—Volume control, tone control, range switch or power switch knob—Package of 5	.75
			11346	Knob—Station selector knob—Package of 5	.75
			11362	Resistor—1 Megohm—Carbon type—1/10 Watt—(R61)—Package of 5	.75
			4678	Ring—Retaining ring for station selector dial glass—Package of 5	.34
			5210	Screw—Chassis mounting screw assembly—Package of 4 (console model)	.16
			11377	Screw—Chassis mounting screw assembly—Comprising one screw, one washer and one lockwasher—Package of 4 (table model)	.12
			11348	Screw—No. 8-32-7/16" Headless cupped point set screw for knob, Stock No. 11346—Package of 10	.32
			11381	Socket—Tuning tube socket and cover	.45
			11349	Spring—Retaining spring for knob—Stock No. 11347—Package of 5	.15

The prices quoted above are subject to change without notice.

©John F. Rider, Publisher

RCA MFG. CO., INC.

MODEL T9-7
Schematic
Socket, Trimmers
Loudspeaker, Pickup

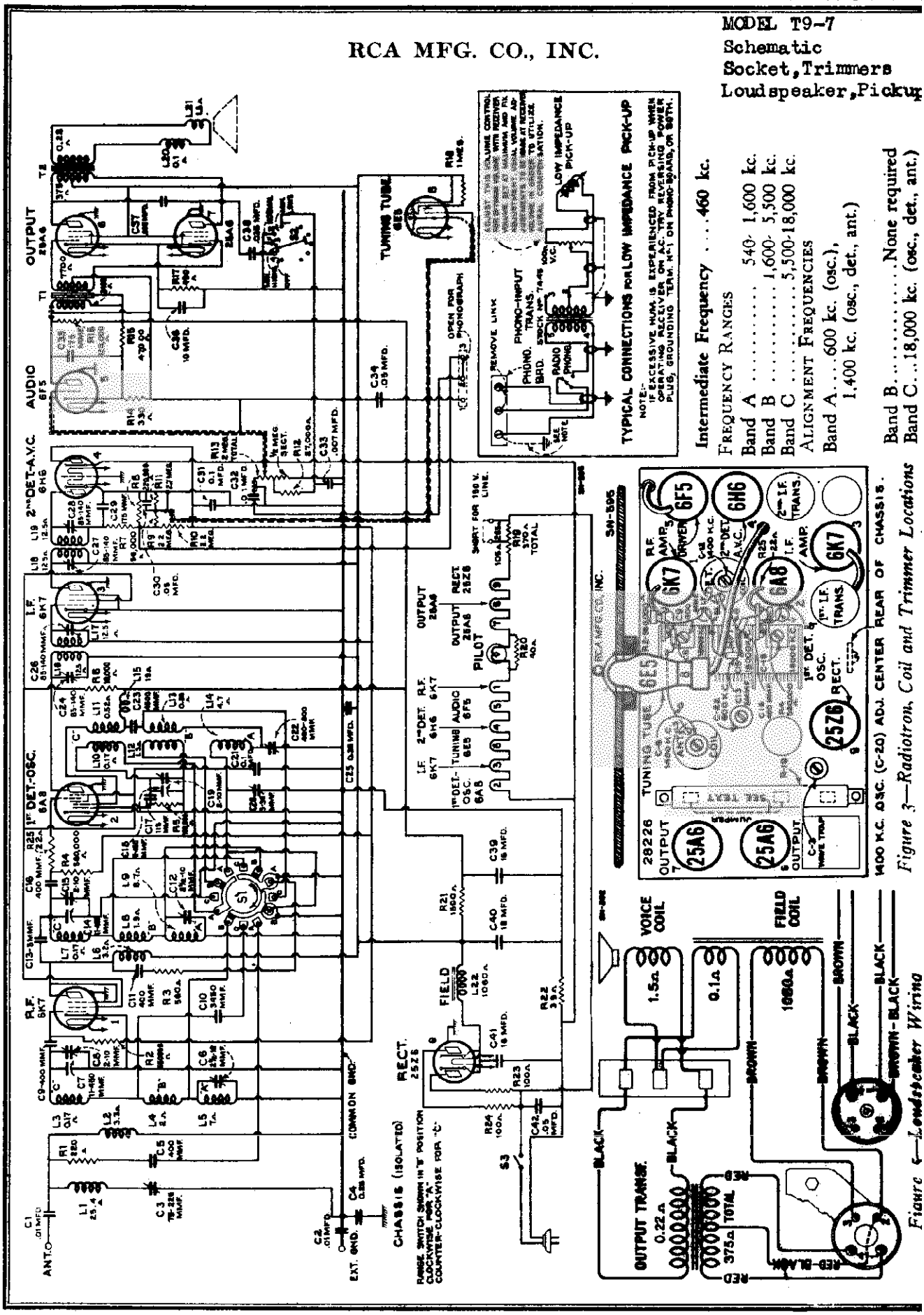

Figure 3—Radiotron, Coil and Trimmer Locations

Figure 4—Loudspeaker Wiring

©John F. Rider, Publisher

MODEL T9-7
Chassis Wiring

RCA MFG. CO., INC.

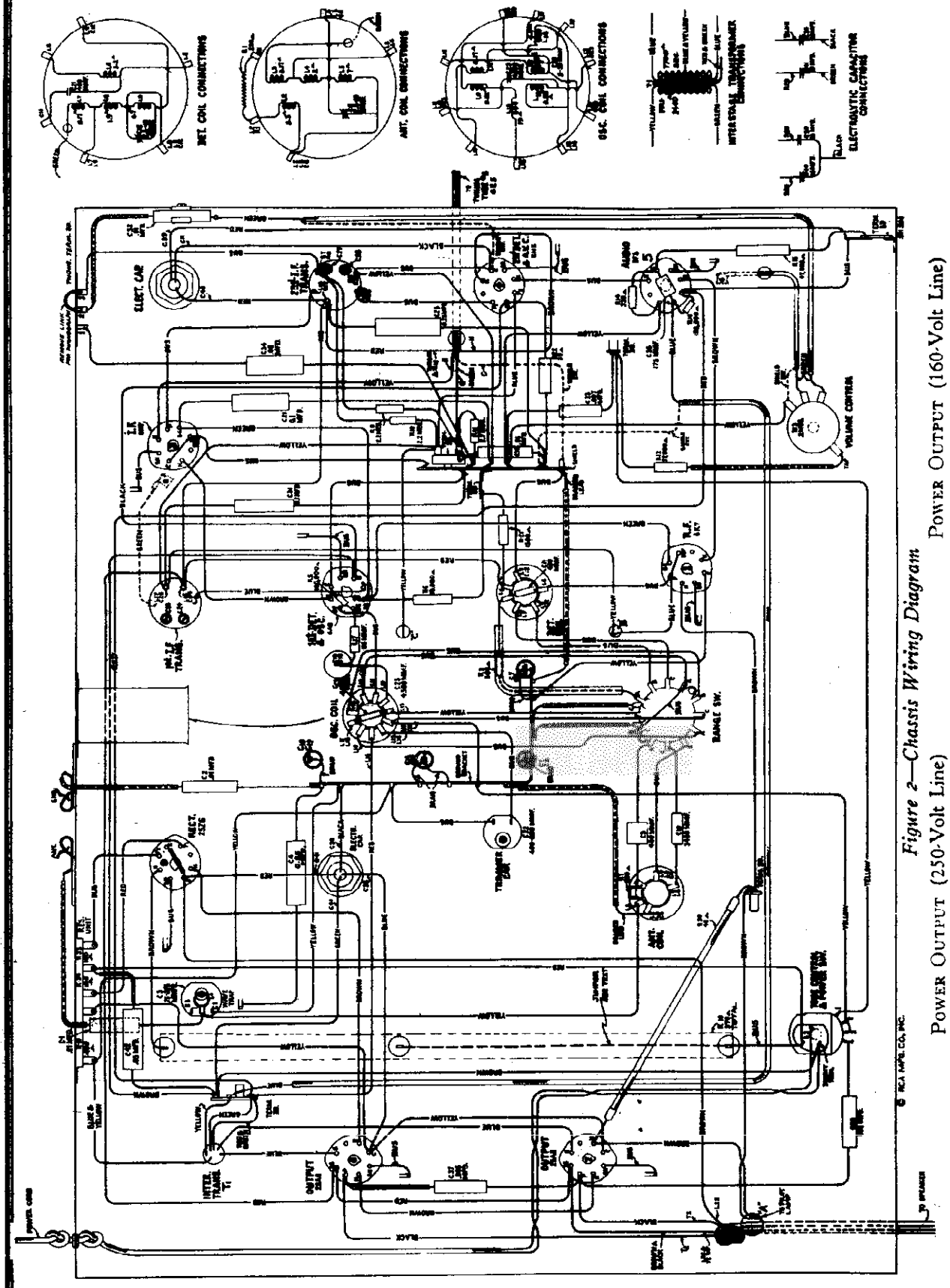

Figure 2—Chassis Wiring Diagram

Power Output (250-Volt Line)
Undistorted ....2.25 Watts A-C, 1.75 Watts D-C
Maximum .....3.00 Watts A-C, 2.30 Watts D-C

Power Output (160-Volt Line)
Undistorted ....0.90 Watts A-C, 0.75 Watts D-C
Maximum .....1.25 Watts A-C, 0.95 Watts D-C

©John F. Rider, Publisher

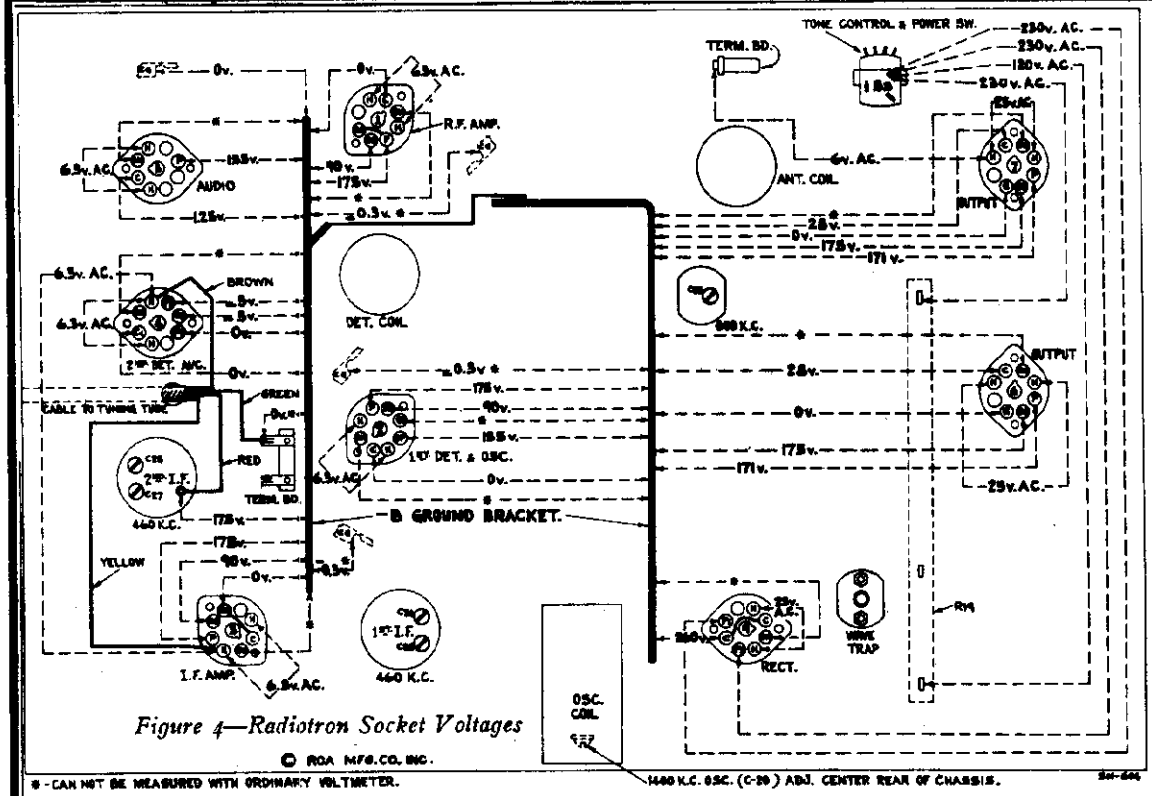

Figure 4—Radiotron Socket Voltages

Measured at 230 volts, 60-cycle supply

Tuned to approximately 900 kc. (Band A)—No signal being received—Volume control setting optional

For 160-volt, 60-cycle supply, 30% lower; for 230-volt d-c supply, 13% lower; for 160-volt d-c supply, 35% lower

On some instruments the following changes affecting the Schematic Circuit and Chassis Wiring Diagrams have been made.

Capacitor C42 is disconnected from the side of the power line which connects to R24 and R23 and is reconnected to the external ground terminal. The other lead of this capacitor remains connected to the side of the power line which connects to C41 and R22.

An additional capacitor (Stock No. 12480 - Capacitor - .05 Mfd. - C43 - List Price $0.30) is connected across the power line circuit. It is mounted on the power switch and connected between the dummy terminal and the lug to which the other lead of the power cord

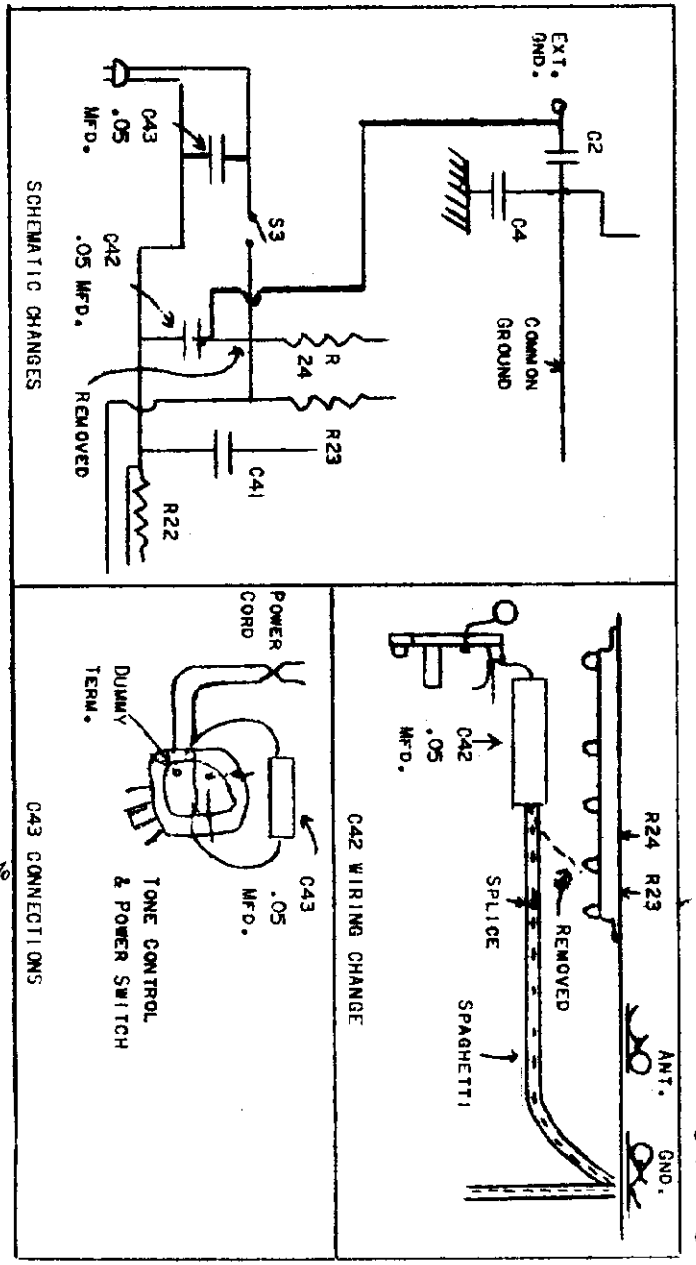

MODEL T9-7
Circuit Data
Alignment, Parts

RCA MFG. CO., INC.

General Features

This instrument comprises a nine-tube chassis, mounted in a table type of cabinet. It uses the new metal tubes. The tuning range is from 540 to 18,000 kc. This coverage includes the important short-wave broadcast bands at 49, 31, 25, 19, and 16 meters, as well as the American broadcast band (540-1600 kc). Chassis features include automatic volume control, cathode-ray tuning indicator ("Magic Eye"), 3-point tone control, antenna wave trap, and audio compensation. A high level of output is available from the receiver for reproduction by the 8-inch electro-dynamic speaker. The tuning dial is an illuminated semi-airplane type. Each dial scale is distinctly marked with a separate color. Positions of the range selector knob are correspondingly indexed on the control panel with sections of similar colors. The tuning control is a dual-ratio type, which permits fast tuning through a 10-to-1 drive ratio and vernier tuning through a 50-to-1 drive ratio. The latter is especially advantageous for accurate tuning of the short-wave stations.

Circuit Arrangement

The conventional superheterodyne type of circuit is used. It consists of an r-f stage, a combined first detector-oscillator stage, a single i-f stage, a diode detector-automatic volume control stage, an audio voltage amplifier stage, a push-pull audio power output stage, a tuning indicator, and a half wave rectifier power supply stage.

Tuned Circuits

The antenna coil system and the detector coil system each consist of a single primary and three series-connected secondary windings to provide the three ranges of tuning. The oscillator coil system is similarly wound on a single form. A range selector switch (S-1) is used for connecting the various sections of these three coil systems into the circuit to provide operation on the band desired. The coils are tuned by a variable three-section gang condenser having trimmer capacitors in shunt with each section. There are additional trimmer capacitors across the section of each coil used for Band "A." A series trimmer is also associated with the Band "A" oscillator coil.

The intermediate frequency amplifier system consists of an RCA-6K7 in a transformer-coupled circuit. This stage operates at a basic frequency of 460 kc. Each winding of both i-f transformers (input and output) is tuned by an adjustable trimmer capacitor.

Detector and A.V.C.

The modulated signal as obtained from the output of the i-f stage is detected by an RCA-6H6 twin-diode tube. The audio frequency secured by this process is transferred to the a-f system for amplification and final reproduction. The d-c voltage which results from detection of the signal is used for automatic volume control. This voltage, which develops across resistor R-8, is applied as automatic control grid bias to the r-f, first detector, and i-f tubes through a suitable resistance filter circuit. The second (auxiliary) diode of the RCA 6H6 is used to supply residual bias for the controlled tubes under conditions of little or no signal. This diode, under such conditions, draws current which flows through resistors R-8 and R-10, thereby maintaining the desired minimum operating bias on such tubes. On application of signal energy above a certain level, however, the auxiliary bias-diode ceases to draw current and the a.v.c.-diode takes over the biasing function.

Audio System

The manual volume control consists of an acoustically tapered potentiometer in the audio circuit between the output of the detector diode and the input grid of the audio-voltage-amplifier tube. This control has a tone-compensating filter connected to it, so that the correct aural balance will be obtained at different volume settings. Transformer coupling is used between the first audio stage and the push-pull power output stage. The output of the power amplifier is transformer-coupled into the dynamic loud-speaker. High-frequency tone control is effected by a capacitor across the plate circuit of one of the output tubes. Speech-music control is effected by a resistor connected to the compensated volume control circuit. Control of tone is obtained by means of the switch (S-2).

Tuning Indicator

A cathode-ray tube is used as a means of visually indicating when the receiver is accurately tuned to the incoming signal.

NOTE: On a-c and d-c circuits of 160 volts or less, the action of the "Magic Eye" will be limited.

This tube is of new design and comprises an amplifier section and a cathode-ray section built in the same glass envelope. The cathode-ray section consists of a conically shaped luminescent screen, upon which a pattern is formed by an effect of the detected signal after said effect has been amplified by the amplifier section, which is fed from the detector diode circuit. The size of the pattern is determined by the strength of the signal voltage, so that any change of tuning may be readily observed in order to facilitate tuning to exact resonance.

Rectifier

The plate, grid, and cathode voltages required for the operation of this receiver are supplied by the RCA-25Z6 rectifier operating as a half-wave rectifier. The field winding of the loudspeaker is used as a reactor in the filter circuit from which it simultaneously receives its magnetizing current.

The filaments of all nine tubes are connected in series and are fed direct from the supply line, the voltage being dropped to the required value by resistors R-30 and R-30. The correct operating voltage for the pilot lamp is developed across resistor R-28. This voltage across the pilot lamp will be slightly high when the receiver is first turned on, but will quickly drop to a normal value as soon as the tube filaments reach their operating temperature.

NOTE: (Power Supply Rating) As shipped from the factory, all instruments are connected for operation on a 200-250-volt supply line. They may be converted for operation at 110-160 volts by connecting a jumper between points shown by dotted line on resistor R-19. Figures 2 and 3.

SERVICE DATA

CAUTION: Grid caps, tuning condenser, and resistor on top of chassis may be "hot" with respect to external ground, and should be avoided when servicing, unless due precautions are taken.

The various diagrams of this bulletin contain such information as will be needed to isolate causes for defective operation when such a condition develops. Values of the resistors, capacitors, coils, etc. are indicated adjacent to the symbols signifying these parts on the diagrams. Identification tables, such as R-1, L-1, C-1, etc., are provided for reference between the diagrams and the replacement parts list. Locating of the parts in the schematic circuit is facilitated by the fact that the numerical titles increase from left to right on the diagram. The coils, resistors, and transformer windings are rated in terms of their d-c resistances only. Resistances of less than one ohm are generally omitted.

Alignment Procedure

Precise alignment is vital to the proper functioning of this receiver. There are four trimming adjustments provided in the i-f system, three in the oscillator coil system, two in the detector coil systems, and two in the antenna coil system. Each of these trimmers has been accurately adjusted during manufacture and should remain properly aligned unless affected by abnormal conditions of climate, or have been altered for service purposes. Incorrect alignment is usually evidenced by loss of sensitivity, improper tone quality, and poor selectivity. These indications will generally be present together.

The correct performance of the receiver can only be obtained when the alignment is performed with adequate and reliable test apparatus. The manufacturer of this instrument has a complete assortment of such service equipment available. This equipment, illustrated and described on a separate page of this booklet, may be purchased from authorized distributors and dealers.

An oscillator (signal generator) is required as a source of the specified alignment frequencies. Visual indication of the receiver output during the adjustments is necessary to enable the serviceman to obtain an accuracy of alignment which is not possible by listening to the signal. The RCA Stock No. 9595 Full-Range Oscillator and the RCA Stock No. 4317 Neon Output Indicator are especially suitable and fulfill the above requirements.

The following procedure should be followed in adjusting the various trimmer capacitors:

I-F Trimmer Adjustments

The four trimmers of the two i-f transformers are located as shown by Figure 4. Each must be aligned to a basic frequency of 460 kc. To do this, attach the output indicator across the voice coil circuit or across the output transformer primary. Connect the output of the test oscillator through a .05 mfd. condenser to the RCA 6A8 control grid, the ground of the test oscillator being connected to the receiver ground terminal. Tune the oscillator to 460 kc. Advance the receiver volume control to its full-on position and adjust the receiver tuning control to a point within its range where no interference is encountered either from local broadcast stations or the heterodyne oscillator. Increase the output of the test oscillator until a slight indication is apparent on the output indicator. Then adjust the two trimmers, C-27 and C-28, of the second i-f transformer to produce maximum (peak) indicated receiver output. Then, adjust the two trimmers, C-24 and C-26, of the first i-f transformer for maximum (peak) receiver output as shown by the output indicating device. During these adjustments, regulate the test oscillator output so that the indication is always as low as possible. By doing so, broadness of tuning due to a.v.c. action will be avoided. It is advisable to repeat the adjustment of all i-f trimmers a second time to assure that the interaction between them has not disturbed the original adjustment.

R-F Trimmer Adjustments

The seven trimmers associated with the r-f, first detector, and oscillator tuned circuits have their locations shown by Figures 3 and 4. The three trimmers which are at all times directly in shunt with the variable tuning condenser necessitate that the high-frequency range (Band C) be aligned first. The range selector switch should, therefore, be turned to its Band C position for the first adjustment. The output indicator should be left connected to the output system as for i-f alignment. Attach the output terminals of the test oscillator to the antenna and ground terminals of the receiver.

Calibrate the dial by rotating the tuning control until the variable condenser plates are in their full mesh (maximum capacity) position and adjusting the dial pointer so that its end points to the horizontal graduation (approximately 330 kc.) at the low-frequency end of the Band A scale.

Proceed further as follows:

(a) Adjust the test oscillator to 18,000 kc. and set the receiver tuning control to a dial reading of 18,000 kc.

(b) Regulate the output of the test oscillator until a slight indication is perceptible at the receiver output. Then adjust the trimmer, C-19, on the oscillator section of the variable condenser to the point at which it produces maximum indicated receiver output. Two points may be found, each of which produces such a maximum. The one of *maximum trimmer capacitance* is correct and should be used. (The oscillator will be 460 kc. below the signal frequency at this adjustment point.)

(c) Adjust the trimmer, C-15, of the detector section of the variable condenser, simultaneously rocking the receiver tuning control backward and forward through the 18,000 kc. input signal, until maximum receiver output results from these combined operations. Rocking of the variable condenser will prevent inaccurate adjustment, which would otherwise be caused by the interaction between the heterodyne oscillator circuit and the detector tuned circuit.

(d) With the receiver tuning control set to 18,000 kc. adjust the trimmer, C-6, on the antenna section of the variable condenser to the point which produces maximum (peak) indicated receiver output.

(e) Change the receiver range selector to its Band A position and set the receiver tuning control to a dial reading of 1,400 kc. Tune the test oscillator to 1,400 kc. and regulate its output to produce a slight indication on the receiver output indicating device.

(f) Adjust the high-frequency trimmers of the Band A oscillator, detector, and antenna coils, C-20, C-12, and C-6 respectively, to the points at which each produces maximum indicated receiver output.

(g) Shift the test oscillator frequency to 600 kc. and tune the receiver to pick up this signal, disregarding the dial reading at which it is best received.

(h) Tune the low-frequency trimmer, C-22, of the oscillator Band A coil, simultaneously rocking the tuning control of the receiver backward and forward through the signal, until maximum indicated receiver output results from these combined operations. The adjustment of C-19, C-15, and C-6 should be corrected at 18,000 kc. as in (b), (c), and (d); also C-20, C-12 and C-6 should be corrected at 1,400 kc. as in (f) to compensate for any changes caused by the adjustment of the low-frequency oscillator coil trimmer.

Phonograph Attachment

A terminal board is provided for connecting a phonograph into the audio amplifying circuit. A typical method of connection is shown on the schematic diagram (Figure 1). Correct procedure to be observed for adjustment of attachment to secure proper aural compensation is indicated.

Wave Trap Adjustment

With the receiver in operation using its normal antenna, tune station selector to the point at which the intermediate frequency interference is most intense. Then adjust the wave trap trimmer to the point which causes maximum suppression of the interference.

Radiotron Socket Voltages

The voltage values indicated from the Radiotron socket contacts, grid caps, resistors, and terminals to –B ground bracket on Figure 4 will assist in the location of causes for faulty operation. Each value as specified should hold within ± 20% when the receiver is normally operative at its rated line voltage. Variations in excess of this limit will usually be indicative of trouble in the basic circuits. These voltages were measured with set tuned to approximately 900 kc. (Band A), no signal being received, and volume control setting optional. To duplicate the conditions under which the voltages were measured requires a 1,000-ohm-per-volt d-c meter, having ranges of 10, 50, and 250 volts. Voltages below 10 read on 10-volt scale, between 10 and 50 on 50-volt scale, and between 50 and 250 on 250-volt scale. A-C voltages were measured with a corresponding a-c meter.

POWER SUPPLY RATINGS

Rating (As shipped from Factory) ..... 200 250 Volts, 40-100 Cycles, also D-C, 110 Watts
Rating (See note in text) ..... 140-160 Volts, 40-100 Cycles, also D-C, 50 Watts

LOUDSPEAKER

Type ..... Electrodynamic Voice Coil Impedance ..... 2.25 Ohms at 400 Cycles

Mechanical Specifications

Height ..... 21⅞ inches
Width ..... 15½ inches
Depth ..... 9½ inches
Weight (Net) ..... 27½ pounds
Weight (Shipping) ..... 33 pounds
Chassis Base Dimensions ..... 13⅞ inches x 7¾ inches x 2½ inches
Tuning Drive Ratios ..... 10-to-1 and 50-to-1
Operating Controls ..... (1) Volume, (2) Tuning, (3) Range Selector, (4) Power Switch-Tone

REPLACEMENT PARTS

Items not genuine factory tested parts, which are readily identified and may be purchased from authorized dealers.

Stock No.	DESCRIPTION	List Price
	RECEIVER ASSEMBLIES	
5237	Bushing—Variable tuning condenser mounting bushing assembly—Package of 3	69.43
12006	Board—Terminal board assembly and link	.25
12008	Cable—Tuning tube cable and socket	.30
11465	Capacitor—Adjustable capacitor—(C22)	.40
12077	Capacitor—.15mfd.—(C19)	.60
11791	Capacitor—.115 Mmfd.—(C17)	.264
11825	Capacitor—.125 Mmfd.—(C24)	.18
11800	Capacitor—.400 Mmfd.—(C5, C9, C10)	.25
12076	Capacitor—.440 Mmfd.—(C10)	.42
4008	Capacitor—.05 Mfd.—(C27)	.20
5148	Capacitor—.05 Mfd.—(C35)	.20
4630	Capacitor—.056 Mfd.—(C1, C2)	.23
11395	Capacitor—.06 Mfd.—(C32)	.18
5196	Capacitor—.060 Mfd.—(C36)	.18
4635	Capacitor—.066 Mfd.—(C30)	.30
12070	Capacitor—.08 Mfd.—(C34, C42)	.30
5170	Capacitor—.085 Mfd.—(C4, C25)	.25
4933	Capacitor—.1 Mfd.—(C21)	.20
4041	Capacitor—.2 Mfd.—(C31)	.22
12038	Resistor—consisting 2 sections of 100 ohms—one section of 400 ohms—(R33, R34)	80.90
11624	Resistor—10 ohms—flexible type—complete with contact cap—(R23)	.22
11966	Resistor—50 ohms—carbon type—½ watt—(R31)—Package of 5	1.00
12074	Resistor—75 ohms—flexible type—(R20)	.30
11306	Resistor—250 ohms—carbon type—½ watt—(R19)—Package of 5	1.00
11304	Resistor—500 ohms—carbon type—½ watt—(R3)—Package of 5	1.00
3047	Resistor—1,200 ohms—carbon type—½ watt—(R21)—Package of 5	1.00
3219	Resistor—15,000 ohms—carbon type—½ watt—(R6)—Package of 5	1.00
11400	Resistor—27,000 ohms—carbon type—½ watt—(R12)—Package of 5	1.00
12073	Resistor—47,000 ohms—carbon type—1 watt—(R11)—Package of 5	1.10
11301	Resistor—100,000 ohms—carbon type—1 watt—(R13)—Package of 5	1.00
12355	Resistor—150,000 ohms—carbon type—1 watt—(R22)—Package of 5	.75
11307	Resistor—1 megohm—carbon type—1/10 watt—(R2, R4)—Package of 5	.75
11829	Resistor—2.2 megohm—carbon type—½ watt—(R9, R10)—Package of 5	1.00
12072	Resistor—3.3 megohm—carbon type—½ watt—(R14)—Package of 5	1.00
11403	Shield—Antenna or detector coil shield for Stock Nos. 11400 and 12069	.26
11390	Shield—Intermediate frequency transformer shield	.25
11404	Shield—Oscillator coil shield for Stock No. 11400	.24
3526	Socket—Dial lamp socket	.30
11190	Socket—7-contact Radiotron socket	.15
11188	Socket—4-contact (All Radiotron socket	.15
12064	Switch—Range switch (S1)	1.10
11392	Switch—Tone control and power switch assembly (S2, S3)	1.14
5236	Terminal—3-post terminal board with clip insulating strip and sleeve	.14
11976	Terminal—Ground terminal clip assembly	.15
11386	Transformer—Plate intermediate frequency transformer—(L16, L17, C26, C30)	1.90
11388	Transformer—Second intermediate frequency transformer—(L18, L19, C27, C28, C29, R7, R8)	3.02
12081	Transformer—Interstage transformer—(T1)	84.52
11291	Trap—Wave trap (L1, C3)	1.25
11227	Volume Control—(R15)	1.20
	REPRODUCER ASSEMBLIES	
11232	Board—Terminal board with two lead wire clips	.18
11231	Bolt—Yoke and core assembly bolt and nut	.16
8080	Bracket—Output transformer mounting bracket	.14
11257	Clamp—Cone center suspension clamping nut and screw assembly—Package of 3	.30
12079	Coil—Field coil—(L22)	1.80
11255	Coil—Neutralizing coil—(L20)	.30
11233	Cone—Reproducer cone—(L21)—Package of 3	3.50
5040	Connector—4-contact female connector for reproducer cable	.25
5039	Connector—4-contact male connector for reproducer	.25
8642	Reproducer—Complete	6.00
12080	Transformer—Output transformer—(T2)	1.70
11266	Washer—Spring washer—used to hold field coil securely—Package of 5	.20
	MISCELLANEOUS ASSEMBLIES	
11990	Clamp—Tuning tube mounting bracket and clamp assembly	.22
12379	Escutcheon—Tuning tube escutcheon	.40
11376	Escutcheon—Station selector escutcheon and crystal	.70
11502	Knob—Range switch knob—Package of 5	.80
11610	Knob—Station selector knob assembly—Comprising 1 large and 1 small knob—Package of 5	1.00
11347	Knob—Volume control or power switch knob—Package of 5	.75
11382	Resistor—1 megohm—carbon resistor—1/10 watt—(R16)—Package of 5	.75
11327	Screw—Chassis mounting screw assembly—Package of 4	.32
11381	Socket—Tuning tube socket and cover	.45
11349	Spring—Retaining spring for knob Stock Nos. 11347 and 11382 and small knob in No. 11610—Package of 5	.15
	Spring—Retaining spring for large knobs —for Stock No. 11610—Package of 10	.20

This prices quoted above are subject to change without notice.

NOTES

(1) Beat notes or heterodyning (whistles) may be encountered in some instances on these receivers due to excessive antenna capacitance. This condition may be corrected by reducing the size of the antenna or by inserting a 150 mmfd. capacitor in series with the antenna lead at the antenna terminal. Interference in the form of "beats" from a combination of local stations may frequently be remedied by tuning the wave trap to one of the interfering stations. The wave trap will tune from approximately 375 kc. to 700 kc.

©John F. Rider, Publisher

RCA MFG. CO., INC.

MODEL T9-8
Schematic
Pickup

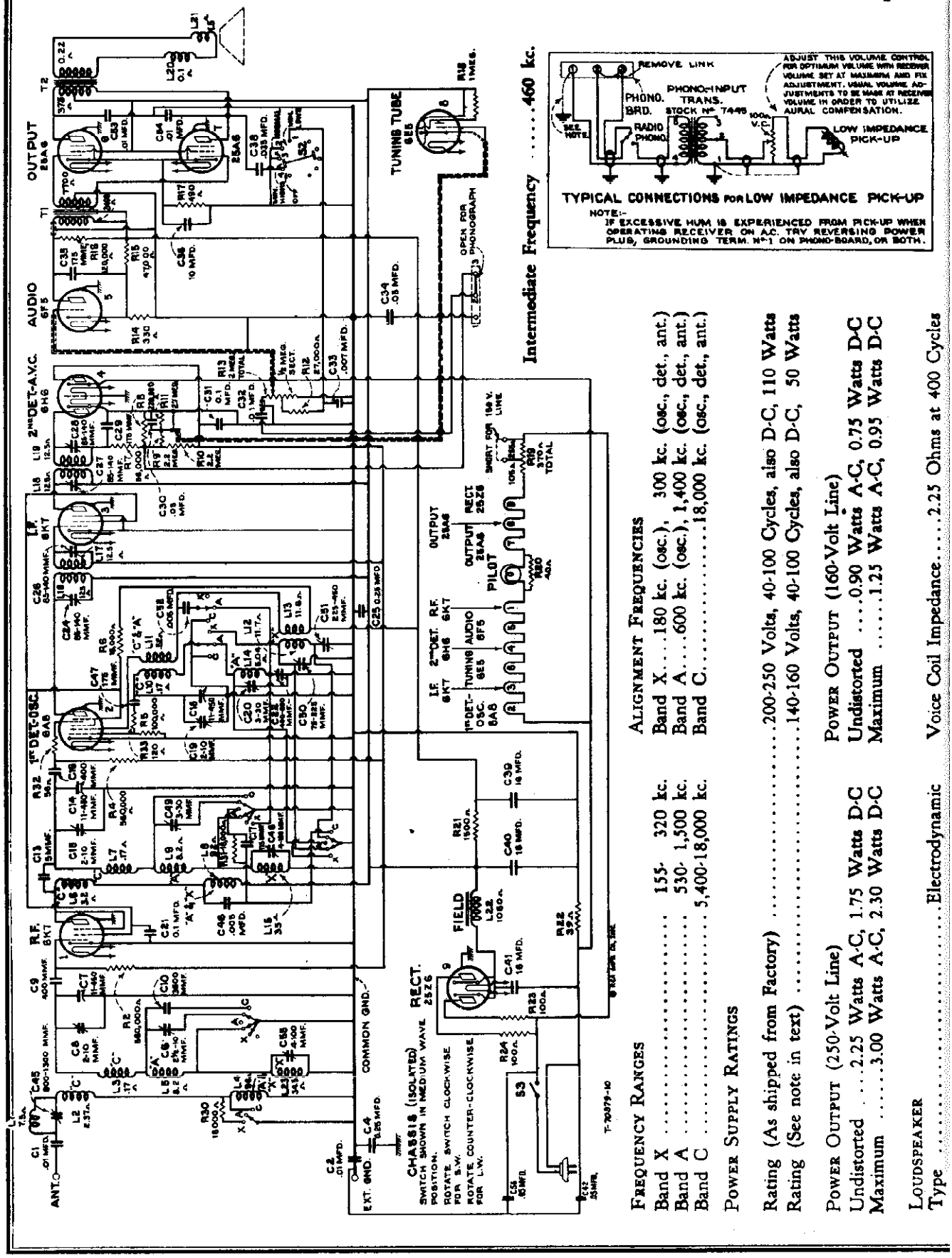

Frequency Ranges

Band X	155- 320 kc.
Band A	530- 1,500 kc.
Band C	5,400-18,000 kc.

Alignment Frequencies

Band X	180 kc. (osc.), 300 kc. (osc., det., ant.)
Band A	600 kc. (osc.), 1,400 kc. (osc., det., ant.)
Band C	18,000 kc. (osc., det., ant.)

Power Supply Ratings

Rating (As shipped from Factory)	200-250 Volts, 40-100 Cycles, also D-C, 110 Watts
Rating (See note in text)	140-160 Volts, 40-100 Cycles, also D-C, 50 Watts

Power Output (250-Volt Line)

Undistorted	2.25 Watts A-C, 1.75 Watts D-C
Maximum	3.00 Watts A-C, 2.30 Watts D-C

Power Output (160-Volt Line)

Undistorted	0.90 Watts A-C, 0.75 Watts D-C
Maximum	1.25 Watts A-C, 0.95 Watts D-C

Loudspeaker

Type	Electrodynamic
Voice Coil Impedance	2.25 Ohms at 400 Cycles

©John F. Rider, Publisher

MODEL T9-8
Chassis Wiring

RCA MFG. CO., INC.

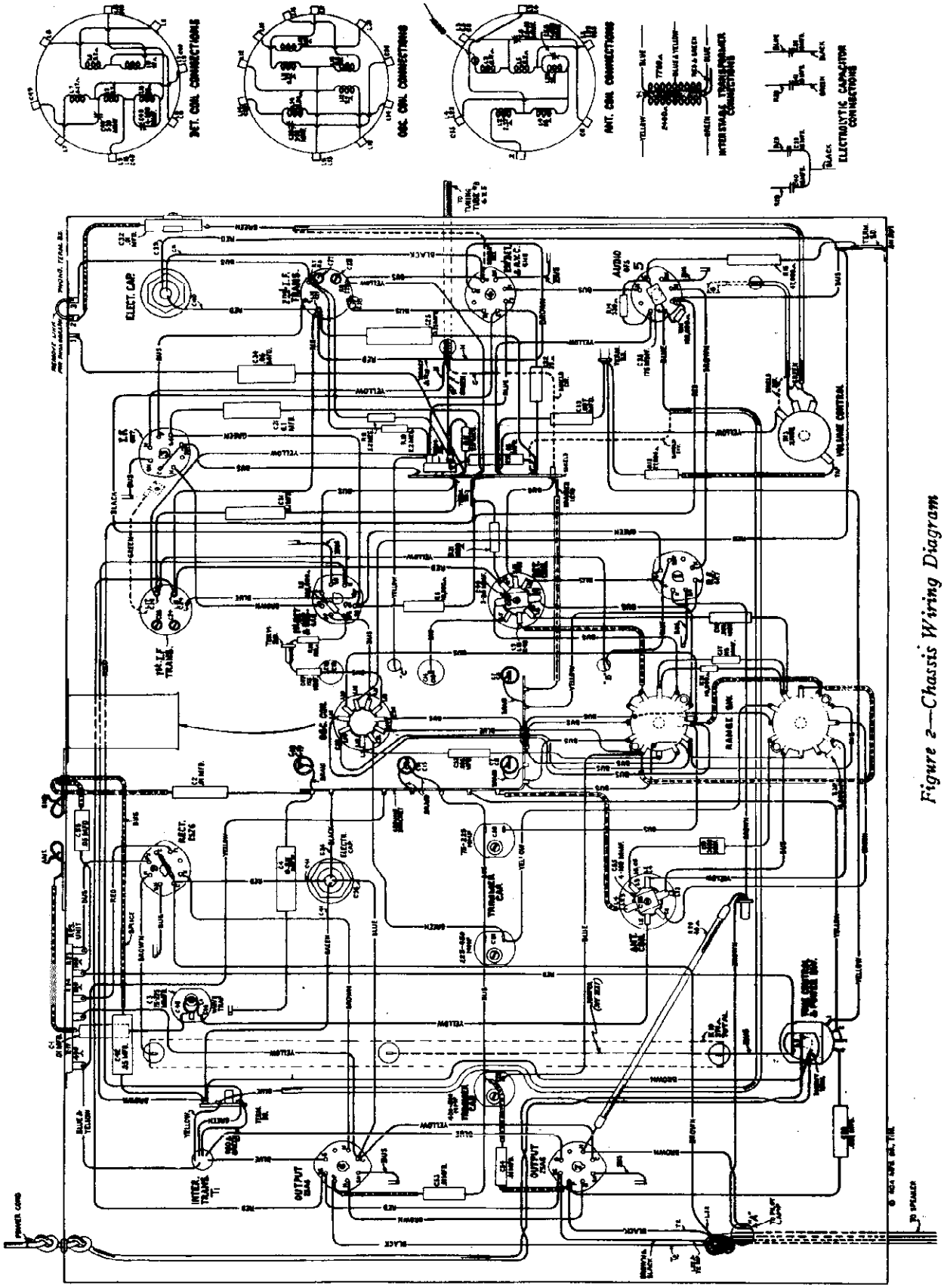

Figure 2—Chassis Wiring Diagram

©John F. Rider, Publisher

RCA MFG. CO., INC.

MODEL T9-8
Socket, Trimmers
Loudspeaker
Voltage

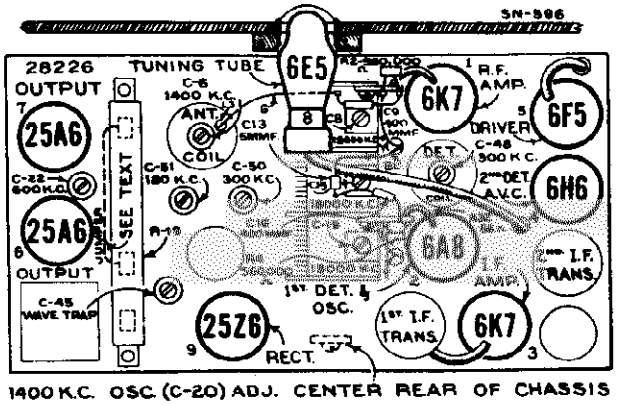

Figure 3—Radiotron, Coil and Trimmer Locations

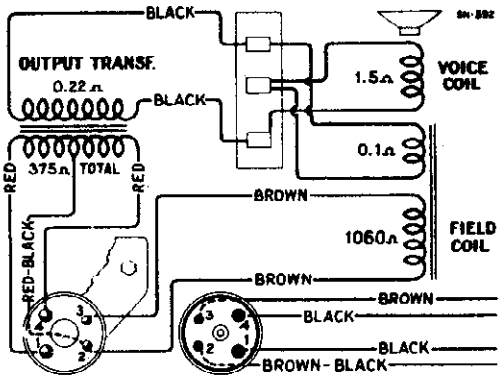

Figure 5—Loudspeaker Wiring

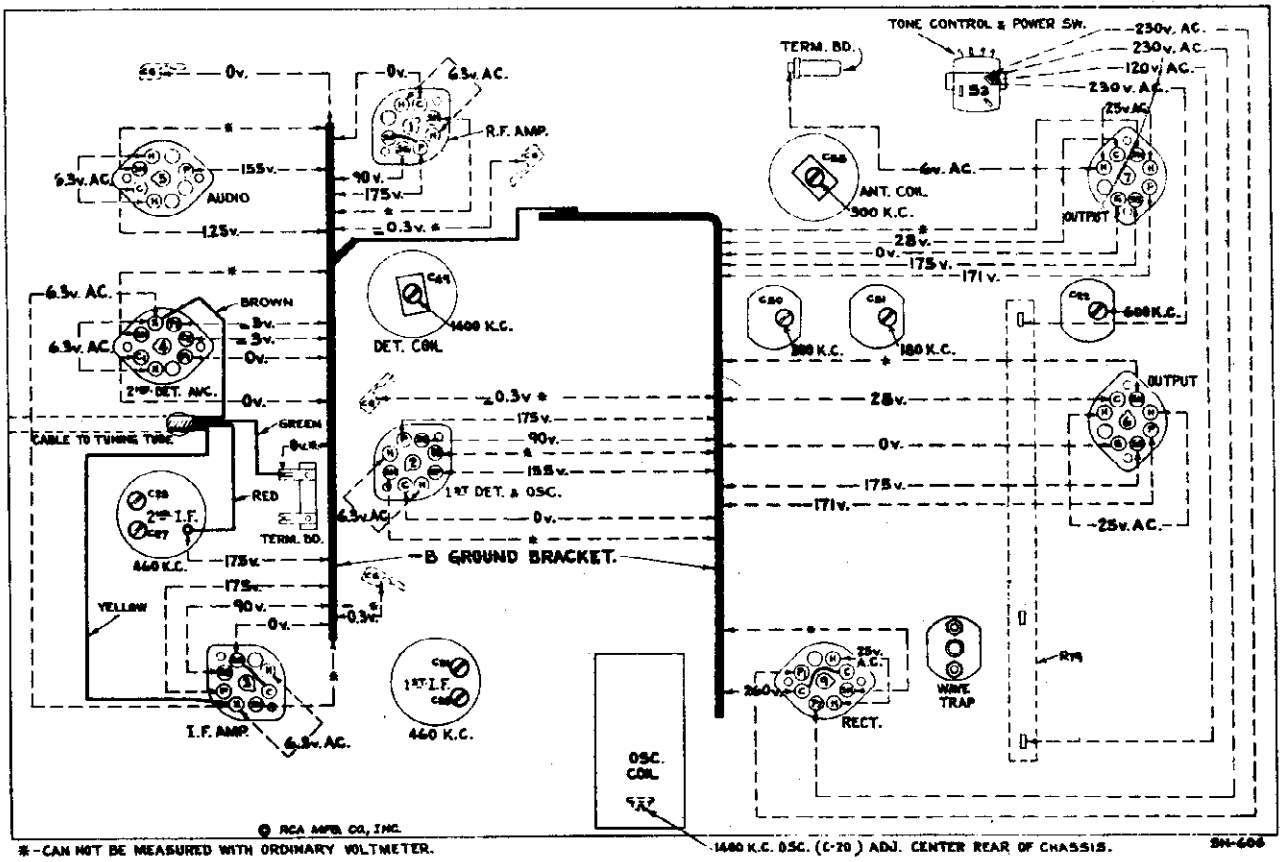

Figure 4—Radiotron Socket Voltages

Measured at 230 volts, 60-cycle supply

Tuned to approximately 900 kc. (Band A)—No signal being received—Volume control setting optional

For 160-volt, 60-cycle supply, 30% lower; 230-volt d-c supply, 13% lower; 160-volt d-c supply, 35% lower.

©John F. Rider, Publisher

MODEL T9-6
Circuit Data
Alignment, Data
Parts List

RCA MFG. CO., INC.

General Features

This instrument comprises a nine-tube chassis, mounted in a table type of cabinet. It uses the new metal tubes. The tuning range is from 155 to 320 kc.; from 530 to 1,500 kc.; and from 5,400 to 18,000 kc. This coverage includes the important short-wave bands at 49, 31, 25, 19 and 16 meters, the European long-wave band (150-320 kc.) and the American broadcast band (530-1,500 kc.). Chassis features include automatic volume control, cathode ray tuning indicator ("Magic Eye"), 3-point tone control, antenna wave trap, and audio compensation. A high level of output is available from the receiver for reproduction by the 8-inch electrodynamic speaker. The tuning dial is an illuminated semi-airplane type. Each dial scale is distinctly marked with a separate color. Positions of the range selector knob are correspondingly indexed on the control panel with sections of similar colors. The tuning control is a dual-ratio type, which permits fast tuning through a 10-to-1 drive ratio and vernier tuning through a 50-to-1 drive ratio. The latter is especially advantageous for accurate tuning of the short-wave stations.

Circuit Arrangement

The conventional superheterodyne type of circuit is used. It consists of an r-f stage, a combined first detector-oscillator stage, a single i-f stage, a diode detector-automatic volume control stage, an audio voltage amplifier stage, a push-pull audio power output stage, a tuning indicator, and a half-wave rectifier power supply stage.

Tuned Circuits

The antenna coil system and the detector coil system each consist of two series-connected primary windings and three series-connected secondary windings to provide the three ranges of tuning. The oscillator coil system is similarly wound on a single form. A range selector switch (S-1) is used for connecting the various sections of these three coil systems into the circuit to provide operation on the band desired. The coils are tuned by a variable three-section gang condenser having trimming capacitors in shunt with each section. There are additional trimming capacitors across the section of each Band "A" coil and each Band "X" coil. Series trimming capacitors are also associated with the Band "A" and Band "X" oscillator coils.

The intermediate frequency amplifier system consists of an RCA-6K7 in a transformer-coupled circuit. This stage operates at a basic frequency of 460 kc. Each winding of both i-f transformers (input and output) is tuned by an adjustable trimmer capacitor.

Detector and A.V.C.

The modulated signal as obtained from the output of the i-f stage is detected by an RCA-6H6 twin-diode tube. The audio frequency secured by this process is transferred to the r-f system for amplification and final reproduction. The d-c voltage which results from detection of the signal is used for automatic volume control. This voltage, which develops across resistor R-8, is applied as automatic control-grid bias to the r-f, first-detector, and i-f tubes through a suitable resistance filter circuit. The second (auxiliary) diode of the RCA-6H6 is used to supply residual bias for the controlled tubes under conditions of little or no signal. This diode, under such conditions, draws current which flows through resistors R-8 and R-10, thereby maintaining the desired maximum operating bias on such tubes. On application of signal energy above a certain level, however, the auxiliary bias-diode ceases to draw current and the a.v.c.-diode takes over the biasing function.

Audio System

The manual volume control consists of an accurately tapered potentiometer in the audio circuit between the output of the detector diode and the input grid of the audio-voltage amplifier tube. This control has a tone-compensating filter connected to it, so that the correct aural balance will be obtained at different volume settings. Transformer coupling is used between the first audio stage and the push-pull power output stage. The output of the power amplifier is transformer-coupled into the dynamic loudspeaker. High-frequency tone control is effected by a capacitor across the plate circuit of one of the output tubes. Speech-music control is effected by a resistor connected to the compensated volume control circuit. Control of tone is obtained by means of the switch (S-2).

Tuning Indicator

A cathode-ray tube is used as a means of visually indicating when the receiver is accurately tuned to the incoming signal.

NOTE: On a-c and d-c circuits of 160 volts or less, the action of the "Magic Eye" will be limited.

This tube is of new design and comprises an amplifier section and a cathode-ray section built in the same glass envelope. The cathode-ray section consists of a conically shaped luminescent screen, upon which a pattern is formed by an effect of the detected signal after said effect has been amplified by the amplifier section, which is fed from the detector diode circuit. The size of the pattern is determined by the strength of the signal voltage, so that any changes of tuning may be readily observed in order to facilitate tuning to exact resonance.

Rectifier

The plate, grid, and cathode voltages required for the operation of this receiver are supplied by the RCA-25Z6 rectifier operating as a half-wave rectifier. The field winding of the loudspeaker is used as a reactor in the filter circuit from which it simultaneously receives its magnetizing current.

The filaments of all nine tubes are connected in series and are fed direct from the supply line, the voltage being dropped to the required value by resistors R-19 and R-20. The correct operating voltage for the pilot lamp is developed across resistor R-20. This voltage across the pilot lamp will be slightly high when the receiver is first turned on, but will quickly drop to a normal value as soon as the tube filaments reach their operating temperature.

NOTE: (Power Supply Rating) As shipped from the factory, all instruments are connected for operation on a 200-250-volt supply line. They may be converted for operation at 140-160 volts by connecting a jumper between points shown by dotted line on resistor R-19, Figures 2 and 4.

SERVICE DATA

CAUTION: Grid caps, tuning condenser, and resistor on top of chassis may be "hot" with respect to external ground, and should be avoided when servicing, unless due precautions are taken.

The various diagrams of this bulletin contain such information as will be needed to isolate causes for defective operation when such a condition develops. Values of the resistors, capacitors, coils, etc., are indicated adjacent to the symbols signifying these parts on the diagrams. Identification titles, such as R-3, L-2, C-1, etc., are provided for reference between the diagrams and the replacement parts list. Locating of the parts in the schematic circuit is facilitated by the fact that the numerical titles increase from left to right on the diagram. The coils, resistors, and transformer windings are rated in terms of their d-c resistances only. Resistances of less than one ohm are generally omitted.

Alignment Procedure

Precise alignment is vital to the proper functioning of this receiver. There are four trimming adjustments provided in the i-f system, five in the oscillator coil system, three in the detector coil system, and three in the antenna coil system. Each of these trimmers has been accurately adjusted during manufacture and should remain properly aligned unless affected by abnormal conditions of climate, or have been altered for service purposes. Incorrect alignment is usually evidenced by loss of sensitivity, improper tone quality, and poor selectivity. These indications will generally be present together.

The correct performance of the receiver can only be obtained when the alignment is performed with adequate and reliable test apparatus. The manufacturer of this instrument has a complete assortment of such service equipment available. This equipment may be purchased from authorized distributors and dealers.

An oscillator (signal generator) is required as a source of the specified alignment frequencies. Visual indication of the receiver output during the adjustments is necessary to enable the serviceman to obtain an accuracy of alignment which is not possible by listening to the signal. The RCA Stock No. 9595 Pull-Range Oscillator and the RCA Stock No. 4317 Neon Output Indicator are especially suitable and fulfill the above requirements.

The following procedure should be followed in adjusting the various trimmer capacitors:

I-F Trimmer Adjustments

The four trimmers of the two i-f transformers are located as shown by Figure 4. Each must be aligned to a basic frequency of 460 kc. To do this, attach the output indicator across the voice coil circuit or across the output transformer primary. Connect the output of the test oscillator through a .05 mfd. condenser to the RCA-6A8 control grid, the ground of the test oscillator being connected to the receiver ground terminal. Tune the oscillator to 460 kc. Advance the receiver volume control to its full-on position and adjust the receiver tuning control to a point within its range where no interference is encountered either from local broadcast stations or the heterodyne oscillator. Increase the output of the test oscillator until a slight indication is apparent on the output indicator. Then adjust the two trimmers, C-27 and C-28, of the second i-f transformer to produce maximum (peak) indicated receiver output. Then, adjust the two trimmers, C-24 and C-26, of the first i-f transformer for maximum (peak) receiver output as shown by the indicating device. During these adjustments, regulate the test oscillator output so that the indication is always as low as possible. By doing so, broadness of tuning due to a.v.c. action will be avoided. It is advisable to repeat the adjustments of all i-f trimmers a second time to assure that the interaction between them has not disturbed the original adjustment.

R-F Trimmer Adjustments

The eleven trimmers associated with the r-f, first detector, and oscillator tuned circuits have their locations shown by Figures 3 and 4. The three trimmers which are at all times directly in shunt with the variable tuning condenser necessitate that the high-frequency range (Band C) be aligned first. The range selector switch should, therefore, be turned to its Band C position for the first adjustment. The output indicator should be left connected to the output system as for i-f alignment. Attach the output terminals of the test oscillator to the antenna and ground terminals of the receiver.

Calibrate the dial by rotating the tuning control until the variable condenser plates are in their full mesh (maximum capacity) position and adjusting the dial pointer so that its end points to the horizontal graduation (approximately 530 kc.) at the low-frequency end of the Band A scale.

Proceed further as follows:

(a) Adjust the test oscillator to 18,000 kc. and set the receiver tuning control to a dial reading of 18,000 kc.

(b) Regulate the output of the test oscillator until a slight indication is perceptible at the receiver output. Then adjust the trimmer, C-19, on the oscillator section of the variable condenser to the point at which it produces maximum indicated receiver output. Two points may be found, each of which produces such a maximum. The one of *maximum trimmer capacitance* is correct and should be used. (The oscillator will be 460 kc. below the signal frequency at this adjustment point.)

(c) Adjust the trimmer, C-15, of the detector section of the variable condenser, simultaneously rocking the receiver tuning control backward and forward through the 18,000 kc. input signal, until maximum receiver output results from these combined operations. Rocking of the variable condenser will prevent inaccurate adjustment, which would otherwise be caused by the interaction between the heterodyne oscillator circuit and the detector tuned circuit.

(d) With the receiver tuning control set to 18,000 kc. adjust the trimmer, C-8, on the antenna section of the variable condenser to the point which produces maximum (peak) indicated receiver output.

(e) Change the receiver range selector to its Band A position and set the receiver tuning control to a dial reading of 1,400 kc. Tune the test oscillator to 1,400 kc. and regulate its output to produce a slight indication on the receiver output indicating device.

(f) Adjust the high-frequency trimmers of the Band A oscillator, detector, and antenna coils, C-20, C-49, and C-6 respectively, to the points at which each produces maximum indicated receiver output.

(g) Shift the test oscillator frequency to 600 kc. and tune the receiver to pick up this signal, disregarding the dial reading at which it is best received.

(h) Tune the low-frequency trimmer, C-22, of the oscillator Band A coil, simultaneously rocking the tuning control of the receiver backward and forward through the signal, until maximum indicated receiver output results from these combined operations.

(i) Change the receiver range selector to its Band "X" position and set the receiver tuning control to a dial reading of 300 kc., set the test oscillator to 300 kc. and regulate its output to produce a slight indication on the receiver output indicating device.

(j) Adjust the high-frequency trimmers of the Band "X" oscillator, detector and antenna coils, C-50, C-48, and C-55 respectively, to the points at which each produces maximum indicated receiver output.

(k) Shift the test oscillator to 180 kc. and tune the receiver to pick up this signal, disregarding the dial reading at which it is best received.

(l) Tune the low-frequency trimmer C-51 of the oscillator Band "X" coil, simultaneously rocking the tuning control of the receiver backward and forward through the signal, until maximum indicated receiver output results from these combined operations.

(m) The adjustment of C-19, C-15, and C-8 should be corrected at 18,000 kc. as in (b), (c) and (d).

(n) The adjustment of C-20, C-49 and C-6 should be corrected at 1,400 kc. as in (f) to compensate for any change caused by adjustment of the low-frequency oscillator coil trimmer.

(o) The adjustment of C-50, C-48, and C-55 should be corrected at 300 kc. as in (j) to compensate for any changes caused by the low-frequency oscillator coil trimmer.

Radiotron Socket Voltages

The voltage values indicated from the Radiotron socket contacts, grid caps, resistors, and terminals to —B ground bracket on Figure 4 will assist in the location of causes for faulty operation. Each value as specified should hold within ± 20% when the receiver is normally operative at its rated line voltage. Variations in excess of this limit will usually be indicative of trouble in the basic circuits. These voltages were measured with set tuned to approximately 900 kc. (Band A); no signal being received, and volume control setting optional. To duplicate the conditions under which the voltages were measured requires a 1,000-ohm-per-volt d-c meter, having ranges of 10, 50, and 250 volts. Voltages below 10 read on 10-volt scale, between 10 and 50 on 50-volt scale, and between 50 and 250 on 250-volt scale. A-C voltages were measured with a corresponding a-c meter.

Phonograph Attachment

A terminal board is provided for connecting a phonograph into the audio amplifying circuit. A typical method of connection is shown on the schematic diagram (Figure 1). Correct procedure to be observed for adjustment of attachment to secure proper aural compensation is indicated.

Wave-Trap Adjustment

With the receiver in operation using its normal antenna, tune station selector to the point at which the intermediate frequency interference is most intense. Then adjust the wave trap trimmer to the point which causes maximum suppression of the interference.

Mechanical Specifications

Height	21⅛ inches
Width	15¹⁵⁄₁₆ inches
Depth	9½ inches
Weight (Net)	27½ pounds
Weight (Shipping)	33 pounds
Chassis Base Dimensions	13⅛ x 7⅞ x 2½ inches
Tuning Drive Ratios	10-to-1 and 50-to-1

RADIOTRON COMPLEMENT

(1) RCA-6K7	Radio-Frequency Amplifier
(1) RCA-6A8	First Detector-Oscillator
(1) RCA-6K7	Intermediate Amplifier
(1) RCA-6H6	Second Detector-A.V.C.
(1) RCA-6P1	Audio Voltage Amplifier
(1) RCA-25A6	Audio Power Amplifier
(1) RCA-25A6	Audio Power Amplifier
(1) RCA-6E5	Tuning Indicator
(1) RCA-25Z6	Half-Wave Rectifier

REPLACEMENT PARTS

Stock No.	DESCRIPTION	List Price
	RECEIVER ASSEMBLIES	
5237	Ganging—Variable tuning condenser comprising bushing assembly—Package of 3	$9.45
12066	Board—Terminal board assembly and link	.25
12008	Cable—Tuning twin cable and socket	.20
11754	Capacitor—Adjustable capacitor—(C20)	.40
11461	Capacitor—Adjustable capacitor—(C22)	.40
11964	Capacitor—Adjustable capacitor—(C51)	.55
12007	Capacitor—.5 Mmfd.—(C52)	.50
11962	Capacitor—13 Mmfd.—(C31)	.50
11963	Capacitor—132 Mmfd.—(C30, C50)	.50
11430	Capacitor—400 Mmfd.—(C9, C36)	$0.55
11461	Capacitor—Adjustable capacitor—(C51)	.40
4864	Capacitor—.001 Mfd.—(C46, C47)	.50
5148	Capacitor—.007 Mfd.—(C42)	.50
9858	Capacitor—.01 Mfd.—(C2, C10, C39, C44)	.55
11393	Capacitor—.02 Mfd.—(C45)	.50
5186	Capacitor—.025 Mfd.—(C40)	.55
4858	Capacitor—.05 Mfd.—(C43)	.50
12075	Capacitor—.08 Mfd.—(C37)	.50
12480	Capacitor—.2 Mfd.—(C38)	.50
5170	Capacitor—.3 Mfd.—(C4, C48)	.55
4833	Capacitor—.4 Mfd.—(C41)	.50
4841	Capacitor—.5 Mfd.—(C1)	$0.55
12065	Capacitor Pack—Comprising 3 sections of .05 Mfd., one section of .01 Mfd.—(C5, C6)	.55
12066	Capacitor Pack—Comprising 3 sections of .05 Mfd., one section of .01 Mfd.—(C7, C11)	.55
12061	Coil—Antenna coil—(L1, L2, L3, L4, L5, L6, C35)	1.00
12062	Coil—Detector coil—(L7, L8, L9, L10, L11, L12, C35, C36)	1.00
12067	Coil—Oscillator coil—(L13, L14, L15, L16, L17, L18, C35, C36)	1.00
12057	Condenser—3 gang variable tuning condenser—(C7, C8, C14, C13, C18, C19)	4.00
12131	Dial—Station selector dial scale	.75
11304	Foot—Chassis foot and bracket assembly—Package of 3	.70
11099	Indicator—Station selector indicator pointer	.50
4340	Lamp—Dial lamp—Package of 5	.60
12053	Resistance—Line resistor—Comprising one 260-ohm and one 105-ohm section—(R19)	.50
12060	Resistor—Comprising 2 sections of 100 ohms and two sections of 600 ohms—(R17, R23, R24)	.90
11066	Resistor—50 ohms—carbon type—½ watt—(R22)—Package of 5	1.00
12074	Resistor—60 ohms—flexible type—(R20)	.30
12075	Resistor—96 ohms—flexible type, complete with connector cap—(R26)	.50
12071	Resistor—120 ohms—flexible type—½ watt—(R25)—Package of 5	1.00
11104	Resistor—220 ohms—carbon type—½ watt—(R14)—Package of 5	1.00
3047	Resistor—1,000 ohms—carbon type—½ watt—(R21)—Package of 5	1.00
5119	Resistor—10,000 ohms—carbon type—½ watt—(R6)—Package of 5	1.00
12070	Resistor—14,000 ohms—carbon type—1/10 watt—(R30, R31)—Package of 5	.75
11400	Resistor—27,000 ohms—carbon type—½ watt—(R11)—Package of 5	1.00
12073	Resistor—47,000 ohms—carbon type—1 watt—(R13)—Package of 5	1.10
11381	Resistor—100,000 ohms—carbon type—1/10 watt—(R5)—Package of 5	.75
12355	Resistor—120,000 ohms—carbon type—1/10 watt—(R16)—Package of 5	.75
11397	Resistor—500,000 ohms—carbon type—1/10 watt—(R2, R9)—Package of 5	.75
11086	Resistor—2.2 megohms—carbon type—½ watt—(R4, R10)—Package of 5	1.00
12072	Resistor—4.7 megohms—carbon type—½ watt—(R12)—Package of 5	1.00
11064	Shield—Antenna or detector coil shield—for stock Nos. 12061 and 12062	.30
11399	Shield—Intermediate frequency transformer shield	.25
11089	Shield—Oscillator coil shield for Stock No. 12062	.24
2880	Socket—Dial lamp socket	.10
11390	Socket—7-contact Radiotron socket	.15
11389	Socket—6-contact 6A8 Radiotron socket	$0.15
11561	Switch—Range switch	1.00
11388	Switch—Tone control and power switch assembly (S2, S3)	1.10
9000	Terminal—Aerial terminal board with clip insulators strip and studs	.10
11976	Terminal—Ground terminal clip assembly	.15
11380	Transformer—First intermediate frequency transformer—(L18, L19, C24, C26)	1.00
11060	Transformer—Second intermediate frequency transformer—(L16, L19, C27, C28, C25, R7, R8)	1.00
10881	Transformer—Power supply transformer—(T1)	4.50
11057	Trap—Wave trap—(L1, C45)	1.25
11237	Volume Control—(R15)	1.20
	REPRODUCER ASSEMBLIES	
11332	Board—Terminal board with two lead wire clips	.10
11331	Bolt—Voice coil core assembly bolt and nut	.10
9000	Bracket—Output transformer mounting bracket	.10
11227	Cone—Cone center suspension clamping nut and cover assembly—Package of 3	.10
12059	Coil—Field coil—(L22)	1.00
11252	Coil—Magnetizing coil—(L20)	.30
11326	Cone—Reproducer cone—(L21)—Package of 2	2.00
9040	Connector—4-contact female connector for reproducer cable	.25
9000	Connector—4-contact male connector for reproducer	.25
9043	Receptacle—Connector	0.50
12060	Transformer—Output transformer—(T2)	1.70
11084	Washer—Spring washer—used to hold field coil assembly—Package of 5	.20
	MISCELLANEOUS ASSEMBLIES	
11096	Cabinet—Tuning tube mounting bracket and clamp assembly	.22
11270	Escutcheon—Tuning tube escutcheon	.40
11356	Escutcheon—Station selector escutcheon and crystal	.75
11322	Knob—Range switch knob—Package of 5	.20
11010	Knob—Station selector knob complete—Comprising 1 large and 1 small knob—Package of 5	1.00
11247	Knob—Volume control or power switch knob—Package of 5	.75
11382	Retainer—Insulation carbon type—1/10 watt—(R18)—Package of 5	.75
11377	Retainer—Mounting screw assembly—Package of 4	.12
11381	Socket—Tuning tube socket and cover	.45
11340	Spring—Retaining spring for dial Stock Nos. 11397 and 11402 and small knob in No. 11356—Package of 5	.15
4902	Spring—Retaining spring for large knobs—for Stock No. 11010—Package of 10	.20

The prices quoted above are subject to change without notice.

NOTES

(1) Beat notes or heterodyning (whistles) may be encountered in some instances on these receivers due to excessive antenna capacitance. This condition may be corrected by reducing the size of the antenna or by inserting a 150 mmfd. capacitor in series with the antenna lead at the antenna terminal. Interference in the form of "beats" from a combination of local stations may frequently be remedied by tuning the wave trap to one of the interfering stations.

©John F. Rider, Publisher

RCA MFG. CO., INC.

MODEL D9-19
Schematic

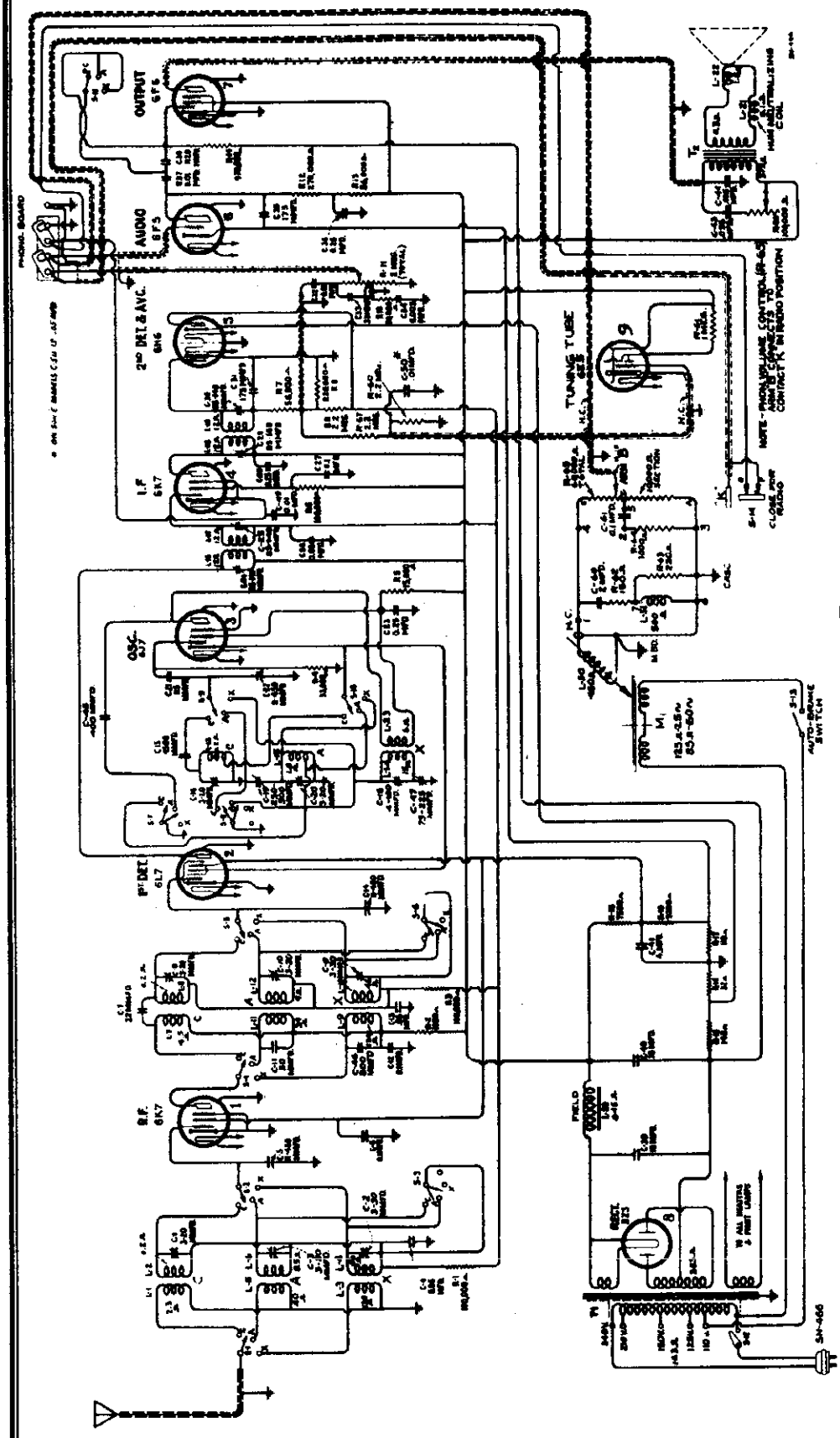

FREQUENCY RANGES

Band X	140 kc.—	410 kc.
Band A	540 kc.—	1,800 kc.
Band C	5,700 kc.—	18,000 kc.

ALIGNMENT FREQUENCIES

Band X	150 kc. (osc.), 400 kc. (osc., ant., det.)
Band A	600 kc. (osc.), 1,720 kc. (osc., ant., det.)
Band C	18,000 kc. (osc., ant., det.)

Intermediate Frequency ..... 460 kc.

POWER SUPPLY RATINGS

Rating A	105—125 volts, 50—60 cycles, 140 watts
Rating B	105—125 volts, 25 cycles, 140 watts
Rating C	100—130/140—160/195—250 volts, 50—60 cycles, 140 watts

©John F. Rider, Publisher

MODEL D9-19
Chassis Wiring

RCA MFG. CO., INC.

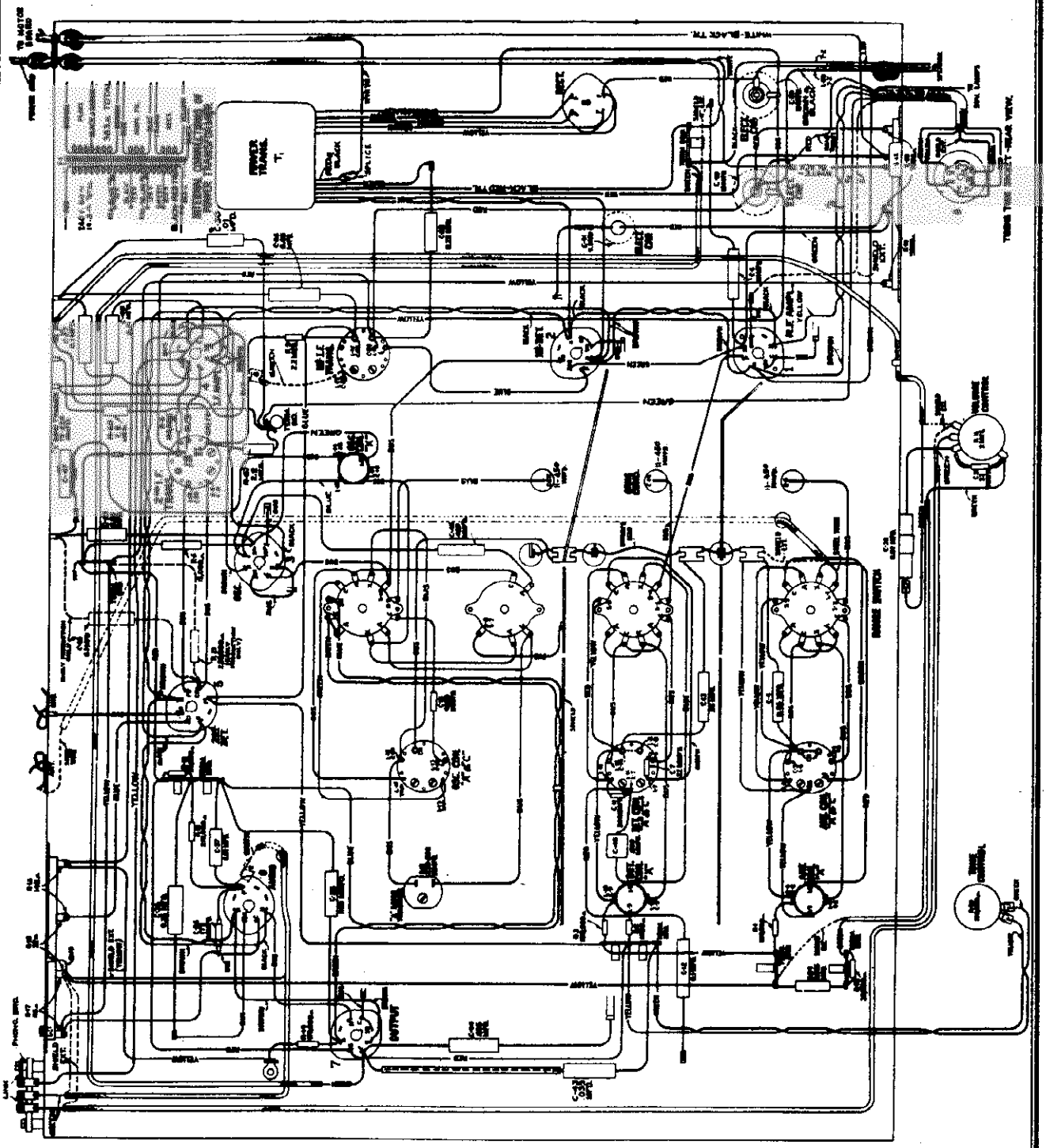

LOUDSPEAKER

Type .....12-inch Electrodynamic
Voice Coil Impedance.....2¼ Ohms at 400 Cycles

PHONOGRAPH

Type .....Manual
Turntable Speed.....(Adjustable) 78 R.P.M.

POWER OUTPUT RATINGS

Undistorted ..... 2 Watts
Maximum ..... 4½ Watts

Type of Pickup. Improved High-Impedance Magnetic
Pickup Impedance.....2,800 Ohms at 1,000 Cycles

©John F. Rider, Publisher

MODEL D9-19
Socket, Trimmer
Voltage, Pickup
Loudspeaker

RCA MFG. CO., INC.

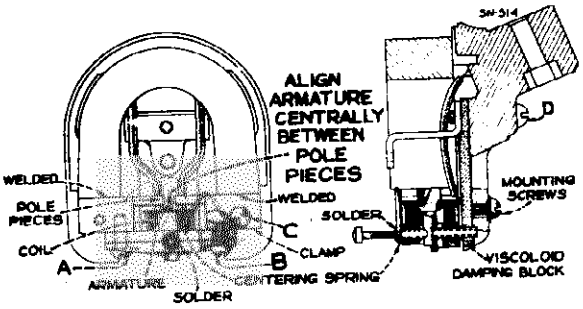

Figure 10—Details of Pickup

RADIOTRON COMPLEMENT

(1) RCA-6K7.....Radio-Frequency Amplifier
(2) RCA-6L7.....First Detector
(3) RCA-6J7.....Heterodyne Oscillator
(4) RCA-6K7.....Intermediate Amplifier
(5) RCA-6H6.....Second Detector and A.V.C.
(6) RCA-6F5.....Audio Amplifier
(7) RCA-6F6.....Power Output Amplifier
(8) RCA-5Z3.....Full Wave Rectifier
(9) RCA-6E5.....Tuning Indicator

For Fig. 4 Alignment Apparatus Connections, see Model 9T & 9K2, Fig. 4

Figure 5—Radiotron Socket Voltages
-No signal being received
Measured at 115 volts, 60 cycle supply-

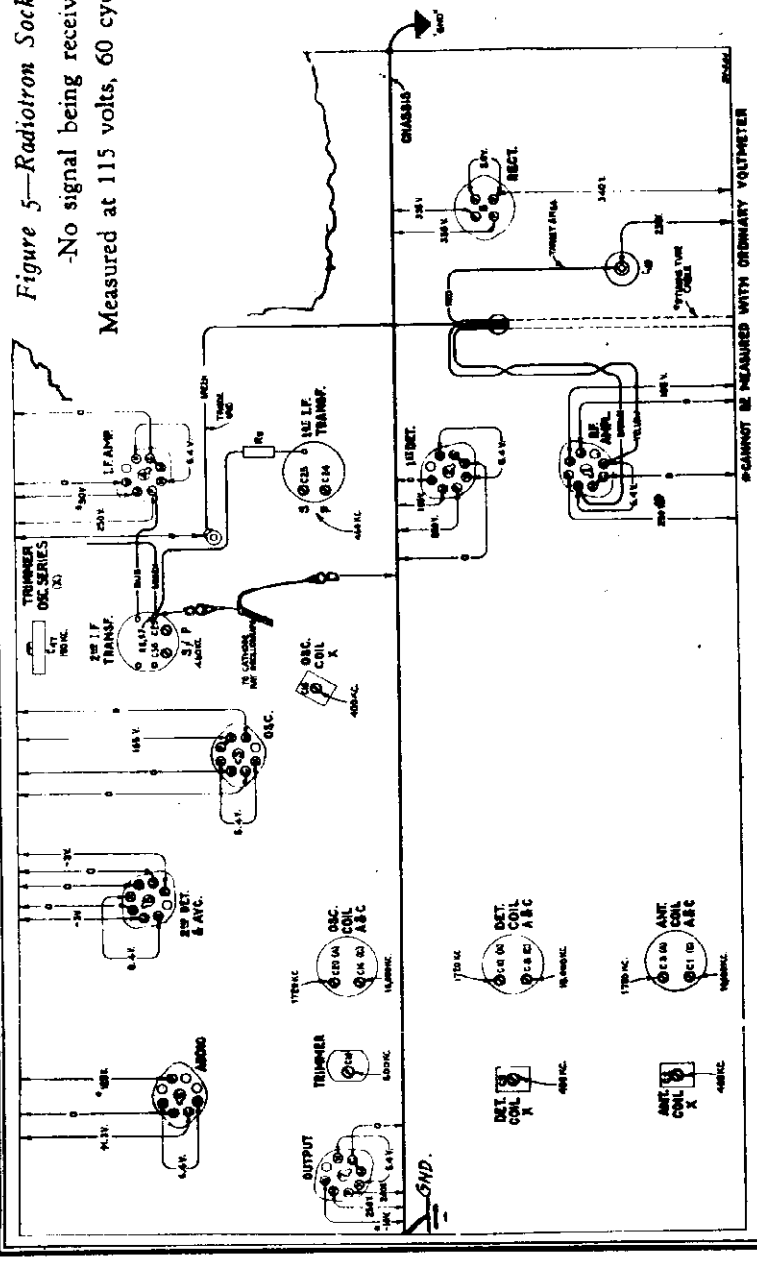

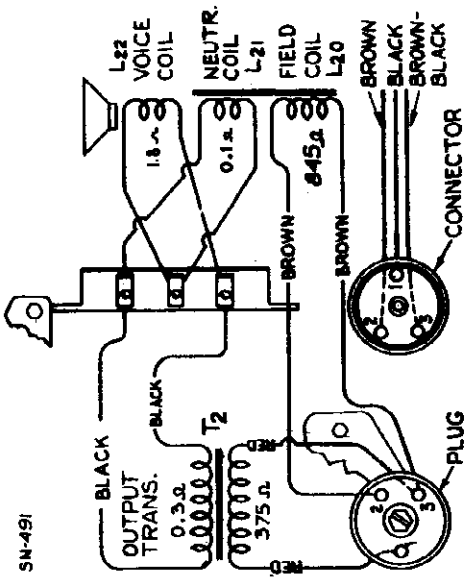

Figure 6—Loudspeaker Wiring

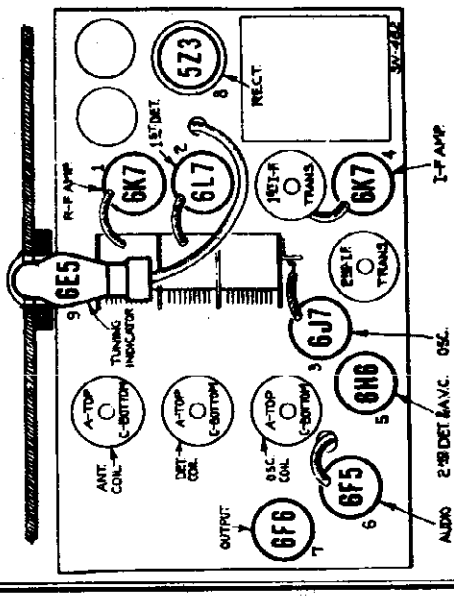

Figure 1—Radiotron and Coil Locations

©John F. Rider, Publisher

MODEL D9-19
Assembly Wiring

RCA MFG. CO., INC.

Motor Details

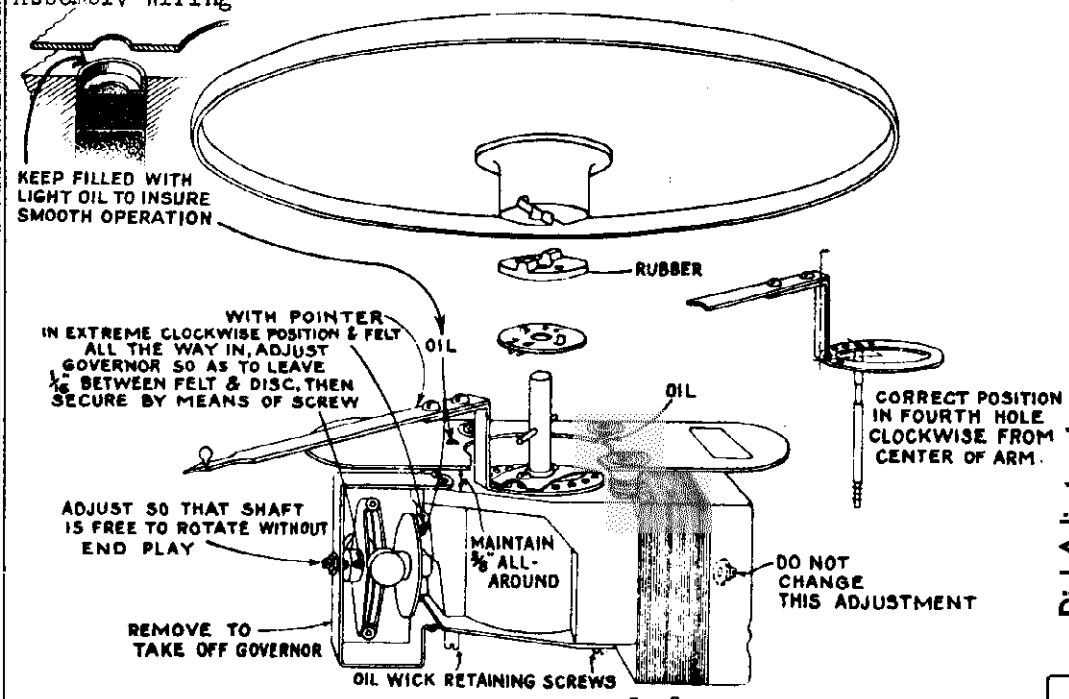

Dial Adjustment

Figure 10 illustrates the relations of the various parts of the dial mechanism when it is in its A—Broadcast position and the range switch is likewise turned to its Band A setting. In re-assembling the dial after repairs, see that the gears are meshed in accordance with the diagram, at the same time noting that the lever which is attached to the range-switch shaft is in the position as shown.

Figure 9—Motor Details

Figure 11—Special Soldering-Iron Tip

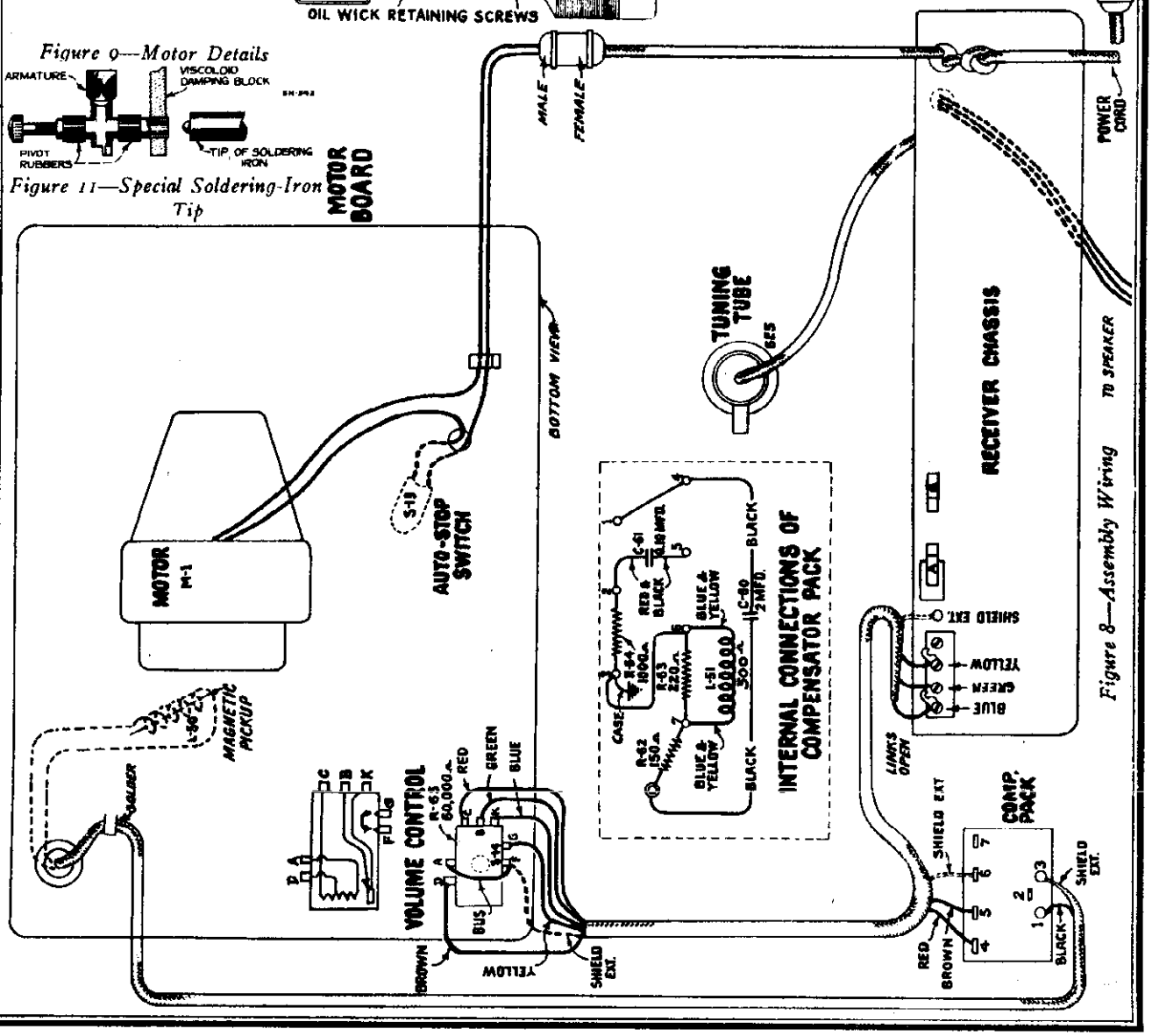

©John F. Rider, Publisher

©John F. Rider, Publisher

General Description

The RCA Victor Model D 9-19 combination radio receiver and manual phonograph provides excellent entertainment from either broadcast reception or record reproduction. It consists of a nine-tube, three-band radio receiver, and a manual phonograph, combined in the one cabinet. The high level of sound energy obtainable from the output of this instrument is capably handled by a new sensitive, twelve-inch, electrodynamic loudspeaker. Outstanding features of this instrument are as follows:

Magic Brain

The radio receiver includes the "Magic Brain" unit for maximum all-around efficiency. This unit is a scientifically correct co-ordination of all the parts for the r-f, oscillator, and first detector functions of a Superheterodyne Receiver. Such design of the important head end, or "Magic Brain" unit, gives greater efficiency in the short-wave ranges as all lead lengths are kept as short as possible, and all sockets and other parts are located for best possible operation.

Magic Eye

A cathode-ray tube whose fluorescent screen has the appearance of a human eye is used for visually indicating when the receiver is accurately tuned to the incoming signal. This tube is of new design. It contains two groups of elements; one group operates as an amplifier and the other group operates as a cathode-ray tube.

The cathode-ray section consists of a conically shaped luminescent screen, a cathode, and a control electrode. The detected signal from the receiver is applied through the amplifier section of the tuning tube to the control electrode of the cathode-ray section. This control electrode, in turn, affects the electron stream emitted by the cathode in such a manner as to cause a triangular shadow on the luminescent screen. The size of the shadow caused by the control electrode is determined by the strength of the incoming signal, so that a change-of-tuning is readily exhibited on the cathode-ray screen, and therefore tuning to exact resonance can be definitely obtained.

RCA All-Metal Tubes

The new metal tubes are used in the radio receiver for amplifying and detecting purposes. These tubes make possible a greater range of stable amplification not previously attainable with corresponding glass types. Their metal envelopes form a perfect electrostatic and electromagnetic shield, precluding the former necessity for elaborate shielding by means of cans. The metal tubes are especially adaptable to the modern, extended-range receivers because of their efficient shielding and their favorable internal characteristics.

Phonograph Mechanism

An improved manually operated phonograph mechanism is used in this model. The 12-inch turntable will accommodate either the 10-inch or the 12-inch phonograph records. The turntable rotates at a speed of 78 r.p.m. A speed regulator is provided for accurate adjustment of this speed. The instrument may be purchased with any one of three ratings as specified under Electrical Specifications. *It is important that a machine of any particular rating be operated at the frequency and voltage for which it is rated.* Attempts to operate at ratings other than specified for the particular instrument may result in damage to both the phonograph motor and the radio receiver. An automatic switch is provided to turn "off" the phonograph motor at the completion of record play when the eccentric-type inside groove record is used.

Colorband Dial

An open face airplane-type of dial is used. Each scale has a band of color adjacent to its graduations and three short strips of corresponding colors at the lower part of the dial for index purposes. An index pointer, which moves as the band switch is rotated, points to one of these colors to identify the band in use. The drive mechanism is variable, there being either a 50-to-1 or 10-to-1 ratio available between the tuning knob and condenser drive shaft. The new shock-proof condenser mounting reduces microphonic tendencies to a minimum.

CIRCUIT FEATURES

The circuit is based upon the Superheterodyne principle. The three ranges of tuning are covered by three sets of coils. A single r-f stage provides the desired selectivity and gain ahead of the hexode first-detector tube. The oscillator stage operates separately from the first detector. A single stage i-f system is employed. Its basic frequency is 460 kc. Diode detection is performed by a double diode RCA-6H6 Radiotron. Automatic volume control is provided by this same tube. The audio system consists of two stages, the driver, an RCA-6F5, and the output, an RCA-6P6. High voltages for plate, screen, and bias supplies are obtained from an RCA-5Z3 full-wave rectifier through an efficient filter. The field of the loudspeaker acts as a reactor in the filter circuit. Further details of the circuit are as follows:

Oscillator

The oscillator circuit has extreme stability of frequency and good uniformity of output over the tuning ranges. These qualities assure that the tuning of the receiver will not drift as the line voltage varies. The action of the circuit is such that when the cathode emission tends to change with line voltage or because of other reasons, the variation of voltage drop in the plate and screen resistor restores the operating characteristics of the tube to normal and thus maintains constancy of the generated signal.

First Detector

This stage has unusually good high frequency mixing efficiency. The tube used, an RCA-6L7, is a new hexode type. The signal is supplied to the first control-grid and the oscillator voltage is fed in on a second control-grid, a screen-grid separating the two. The arrangement of the grids prevents degenerative difficulties, particularly at the higher frequencies. The second grid is direct-connected to the cathode of the oscillator and has no d-c bias.

Compensated Volume Control

The variation in response of the human ear with different degrees of volume is compensated for by a resistor and condenser network in the manual volume control circuit. The volume control itself is an acoustically tapered potentiometer which provides equal changes of sound intensity for the listener per degree of rotation.

Range Switch

The band-change switch has several functions. It exchanges the antenna, detector, and oscillator coils in order to select the range desired. At the same time, it shorts out the unused coils so as to eliminate their absorptive effects. It also varies the fidelity by shorting a coupling condenser in the audio system to provide the desired reproduction for short-wave as well as long-wave reception.

Tone Control

Provision is included for variable reduction of high frequencies. This consists of a resistor and condenser combination across the primary winding of the output transformer, the resistor being the variable element. As it is decreased, the high-frequency response limit is lowered.

Power System

The power transformer has its primary winding capacitively shielded from its secondary windings to eliminate transfer of line disturbances into the receiver and to stop any tendency for the circuit to radiate into the line. Rectification is performed in the usual manner by a full-wave tube.

Detection and A.V.C.

The modulated signal as obtained from the output of the i-f system is detected by an RCA-6H6 twin diode tube. The audio frequency secured by this process is passed on to the a-f system for amplification and final reproduction. The d-c voltage which results from detection of the signal is used for automatic volume control. This voltage, which develops across resistor R-8, is applied as automatic control-grid bias to the r-f, first-detector, and i-f tubes through suitable resistance-capacitance filter circuits. The second diode of the RCA-6H6 is used to supply residual bias for these controlled tubes under conditions of little or no signal. This diode, under such conditions, draws current, which flows through R-9 and R-8, thereby maintaining the desired minimum operating bias on such tubes. On application of signal energy above a certain level, however, the auxiliary bias diode ceases to draw current and the a.v.c. diode takes over the biasing function.

SERVICE DATA

The various diagrams of this booklet contain such information as will be needed for servicing the receiver. The ratings of all resistors, capacitors, coils, etc., are indicated adjacent to the symbols signifying these parts on the diagrams. The coils, reactors, and transformer windings are rated in terms of their d-c resistances only. Ratings of less than one ohm are generally omitted. Identification titles such as R-3, L-2, C-1, etc., are provided for reference between the illustrations and replacement parts.

Alignment Procedure

The extensive frequency range of this receiver necessitates a more or less involved method of alignment. However, if the following directions are carefully applied, the normal performance of the instrument will be obtained.

Correct performance of the receiver can only be obtained when the trimmer adjustments have been made by a skilled service man with the use of adequate and reliable test equipment. Such apparatus as may be required for this particular instrument is illustrated and described on a separate page of this booklet.

Two methods of alignment are applicable. One utilizes a Cathode-Ray Oscillograph as a means of output indication and the other follows former procedure where a glow type indicator or meter is used. The oscillographic method is much to be preferred, since greater accuracy is possible from the type of indication afforded. There are no approximations necessary as with the meter or aural method, but each adjustment can be made with excellent precision. Both methods are hereinafter outlined so that alignment operations may be made according to the equipment available.

It is wise to determine the necessity for alignment as well as the direction of misalignment before making adjustments. The RCA Tuning Wand is an instrument designed particularly for such a purpose.

The Tuning Wand consists of a bakelite rod having a small brass cylinder at one end and a core of finely divided iron at the other. It may be inserted into a tuned coil while a signal of the normal resonant frequency is being supplied to such coil to obtain an indication of the tuning. Holes are provided at the top of the r-f shield cans for entrance of the Wand. The presence of either end of the Wand will cause a change in tuning which will be indicated at the receiver output as an increase or decrease in signal level. If there is a decrease of output when either end is inserted, the tuning is correct and will require no adjustment. However, should there be an increase of output due to the iron core and decrease with the brass cylinder, an increase in inductance or capacitance is indicated as necessary to bring the circuit into line. The trimmer involved should therefore be increased accordingly. If the brass cylinder end causes an increase in output while the iron end causes a decrease, reduction of inductance will be necessary to place the circuit in alignment. This is equivalent to decreasing the trimmer concerned. The following tabulation gives the various changes and the adjustments required:

WAND	SIGNAL	TRIMMER
Brass	Decrease	None
Iron	Decrease	
Brass	Increase	Decrease
Iron	Decrease	
Brass	Decrease	Increase
Iron	Increase	

Radiotron Socket Voltages

The voltage values indicated from the Radiotron socket contacts to chassis on Figure 5 will serve to assist in the location of causes for faulty operation. Each value as specified should hold within ± 20% when the receiver is normally operative at its rated supply voltage. Variations in excess of this limit will usually be indicative of trouble in the basic circuits. The voltages given are actual operating values and do not allow for inaccuracies which may be caused by the loading effect of a voltmeter's internal resistance. This resistance should be duly considered for all readings. The amount of circuit resistance shunting the meter during measurement will determine the accuracy to be obtained, the error increasing as the meter resistance becomes comparable to or less than the circuit resistance. For the majority of readings, a meter having an internal resistance of 1,000-ohms-per-volt will be satisfactory when the range used for each reading is chosen as high as possible consistent with good readability.

©John F. Rider, Publisher

CATHODE-RAY ALIGNMENT

Equipment

A standard source of the specified alignment frequencies is required. Such a source should consist of an RCA Full Range Oscillator, Stock No. 9995. Output indication should be by means of an RCA Stock No. 9545 Cathode-Ray Oscillograph. An RCA Stock No. 9558 Frequency Modulator will be needed to sweep the generated signal and synchronize it with the Oscillograph in order to make possible the visual representation of the resonant characteristic of the circuit being tuned on the cathode-ray fluorescent screen.

I-F Trimmer Adjustments

The four trimmers of the two i-f transformers are located as shown by Figure 5. Each must be aligned to a basic frequency of 460 kc. The last transformer must be aligned firstly and the first transformer aligned secondly. For such a process, it is necessary to feed the output of the Full-Range Oscillator to the stages in their order of alignment, adjusting the trimmers of each transformer and observing the effect at the second detector output on the Cathode-Ray Oscillograph. The proper point of connection of the Oscillograph is with its vertical "high" input terminal attached to the junction of R-7, R8 and R9 as illustrated in Figure 5, and with the "0" or ground terminal to the chassis. The "Ext. Sync." terminals of the Oscillograph should be connected to the Frequency Modulator as shown by Figure 4. A .001 mfd. capacitor installed in series with the Oscillator "Ant." lead will prevent the voltages of the stage under alignment from becoming upset. The vertical "A" amplifier should be "On" for the ensuing adjustments and the gain control kept at its maximum position. For each adjustment, the Oscillator output need be regulated so that the image obtained on the Oscillograph screen will be of sufficient size as to be accurately observable. Proceed further as follows:

(a) Place the receiver, Oscillograph and test Oscillator in operation. Set the receiver range switch to Band "A" and tune the station selector to a point where no interference will be picked up, shorting the antenna and ground terminals if necessary. Set the Oscillograph horizontal "B" amplifier to "Timing" and control its gain so that the luminescent spot sweeps a straight line trace completely across the screen. Place the timing control to "Int." Adjust the intensity and focusing controls of the Oscillograph to produce the correct size and strength of the spot.

(b) Attach the output of the test Oscillator between the control grid cap of the RCA-6K7 i-f tube and chassis ground as shown typically by Figure 4. Tune the Oscillator to 460 kc. and set its modulation switch to "On". Regulate its output until the signal produces a wave pattern on the Oscillograph screen, adjusting the Oscillograph controls to give the desired number of cycles. Cause the image to stand still on the screen by manipulation of the frequency and synchronizing controls. Then carefully tune the two trimmers C-29 and C-30 of the second i-f transformer to produce maximum amplitude (vertical deflection) of the oscillographic image. Under this condition the transformer will be sharply resonated to 460 kc.

(c) The Frequency Modulator should then be placed in operation and interconnected with the Full-Range Oscillator by means of the special shielded patch cord. Figure 4 shows the proper arrangement. Set the Frequency Modulator sweep range switch to its "Lo" position and turn the Oscillator modulation switch to "Off". Change the timing control of the Oscillograph to "Ext." and place the range switch to its No. 2 position. Then carefully shift the tuning of the Oscillator so as to increase its frequency, until two distinct and similar waves appear on the Oscillograph screen and become exactly coincident at their highest points. These curves will be found to occur at an Oscillator setting of *approximately* 540 kc. They will be identical in shape but appearing in reversed positions. Adjust the frequency control of the Oscillograph in order to cause the waves to conform with the above requirements and to make them remain motionless on the screen. This will require a setting of approximately ½ clockwise rotation of the frequency control. The trimmers C-29 and C-30 should then be re-adjusted so that the two curves move together and become exactly coincident throughout their lengths, maintaining the maximum amplitude at which this condition can be brought about.

(d) Leaving the equipment connected and adjusted as in (c), change the Oscillator output to the control-grid cap of the RCA-6L7 first-detector tube. Then adjust the first i-f transformer trimmers C-24 and C-25 so that the forward and reverse waves appearing on the Oscillograph coincide throughout their lengths and have maximum amplitude. The shape of the composite wave obtained from this operation is a true representation of the overall tuning characteristic of the i-f system. Each trimmer of the entire group should then be checked to assure that it is in correct alignment as indicated by the degree of coincidence and relative amplitude of the image on the Oscillograph screen.

R-F Trimmer Adjustments

Locations of the various antenna, detector and oscillator coil trimmers are shown by Figure 5. The test Oscillator should be removed from connection with the i-f system and its output connected to the antenna-ground terminals of the receiver. No changes are to be made in the connections of the Oscillograph at the second detector. During the following adjustments, the Oscillator output should be regulated as often as is necessary to keep the oscillographic image as low as is practically observable. Adherance to such a procedure will obviate the broadness of tuning that would result from a.v.c. action on a stronger signal. Proceed with the adjustments as follows:

Calibration

Set the receiver range switch to Band A and rotate the station selector until the tuning condenser plates are in *full mesh* (maximum capacitance). Then move the main dial pointer until it points exactly to the *horizontal* line at the low frequency end of the Band A scale.

Band A

(a) With the receiver range switch in its Band A position, tune the station selector until the dial pointer is at a reading of 1,720 kc. Adjust the test Oscillator to 1,720 kc. (modulation "On" and Frequency Modulator disconnected) and increase its output to produce a registration on the Oscillograph. Carefully align the oscillator, detector, and antenna trimmers C-38, C-18 and C-3 respectively, so that each brings about maximum amplitude of output as shown by the wave on the Oscillograph. It will be necessary to have the timing control of the Oscillograph on "Int." for this operation. After each trimmer has been peaked, the Oscillograph timing control should be set to "Ext." and the Frequency Modulator placed into operation with its connections to the Oscillator and Oscillograph made in accordance with Figure 4. Turn the modulation switch of the Oscillator to "Off" and retune the Oscillator (increase frequency) until the forward and reverse waves show on the Oscillograph and become coincident at their highest points. Adjust the trimmers C-28, C-16 and C-3 again, setting each to the point which produces the best coincidence and maximum amplitude of the wave images.

(b) Remove the Frequency Modulator cable from the Oscillator and shift the signal frequency to 600 kc. Place the modulation switch to "On". Tune the receiver to pick up this signal, disregarding the dial reading at which it is best received. Then insert the Frequency Modulator plug and retune the Oscillator (modulation "Off") until the two similar forward and reverse waves appear on the screen. For this adjustment, it is advisable to shift the Oscillator to its 200—600 kc. range and use the third harmonic of the generated signal in order to obtain the desired range of sweep. The Oscillator series trimmer C-19 should then be adjusted to produce maximum amplitude of the images. No rocking will be necessary on the station selector inasmuch as the signal frequency is being "wobbled" by the Frequency Modulator to produce the same effect.

After completing this adjustment, the trimmer C-30 should be realigned as in (a) to correct for any change brought about by the adjustment of C-19.

Band X

(a) Disconnect the Frequency Modulator and tune the test Oscillator to a frequency of 400 kc. (Modulation "On"). Place the receiver range switch to its Band X position and tune the station selector until the dial pointer reads exactly 400 kc. Adjust the Oscillograph timing control to "Int." Then align each of the trimmers C-18, C-9 and C-2 to the point producing maximum output at the Oscillograph. Place the Frequency Modulator in operation and attach it to the test Oscillator by means of the shielded cable. Change the Oscillograph timing to "Ext." Increase the frequency of the Oscillator (Modulation "Off") until the two forward and reverse waves appear and become coincident at their highest point, *approximately at 461 kc.* These waves may be made to remain stationary on the screen by manipulation of the Oscillograph range switch (No. 2 position) and frequency control (mid-position). Readjust the three trimmers C-18, C-9 and C-2 to give maximum amplitude and complete coincidence of the waves.

(b) Change the test Oscillator so that it delivers a signal of 130 kc. with the Frequency Modulator disconnected. Tune this signal on the receiver, which should be set to the Band X setting, disregarding the dial reading at which the signal is best received. Then interconnect the Frequency Modulator with the Oscillator and retune the latter to the point at which the two similar waves appear on the screen. Adjust the trimmer C-47 for maximum amplitude of the wave images. Rocking of the tuning condenser will not be necessary for this operation as such is duplicated by the Frequency Modulator. Repeat the alignment of C-18 as in (a) to correct for any error brought about by the adjustment of C-47.

Band C

(a) Turn the range switch of the receiver to its Band C position and tune the station selector until the dial pointer reads 18,000 kc. Set the test Oscillator to 18,000 kc. (modulation "On" and Frequency Modulator disconnected) and regulate its ouput to the level required for convenient observation. Adjust the trimmer C-16 to the point producing maximum output as indicated on the Oscillograph. Check for the presence of the proper "image" signal by tuning the receiver to 17,080 kc. The 18,000 kc. signal of the Oscillator will be received at this point if the adjustment of C-16 has been properly made using the position of least capacitance which gives maximum receiver output. It may be necessary to increase the output of the Oscillator in order to get an indication of the "image". *No adjustments should be made during this check.*

(b) Return the receiver tuning to 18,000 kc., realign C-16 if necessary, and then adjust the detector and antenna trimmers, C-8 and C-1, for maximum signal output as evidenced by the oscillographic image. No further adjustments are to be made on this band.

OUTPUT INDICATOR ALIGNMENT

To align the receiver by means of an output indicator other than a Cathode-Ray Oscillograph will require the use of a standard test Oscillator such as that recommended above for the source of signals and means of indication for the output. The RCA Neon Output Indicator, Stock No. 4817 will be found very satisfactory for such use. It should be connected across the voice coil circuit of the loudspeaker or across the output transformer primary.

I-F Alignment

Connect the test Oscillator to the control-grid cap of the i-f tube. Advance the volume control of the receiver to its full-on position. Tune the test Oscillator to 460 kc. and align the trimmers C-29 and C-30 to give maximum receiver output. Regulate the Oscillator output during this adjustment so that the output indication is as small as can be conveniently observed. After completing the adjustments of these trimmers, reconnect the Oscillator so that it will feed into the control-grid circuit of the RCA-6L7 first detector. Then tune the first i-f transformer trimmers C-24 and C-25 for maximum receiver output.

R-F Alignment

After completing the i-f adjustments, it is advisable to correct the line-up of the circuits ahead of the first detector. The test Oscillator should be connected to the antenna-ground terminals of the receiver and the manual volume control kept at its maximum position. For each adjustment the Oscillator output should be maintained as low as possible in order to avoid broadness of tuning which would result from a.v.c. action on a stronger signal. Band A should be aligned by supplying a 1,720 kc. signal to the receiver, tuning the station selector to a dial reading of 1,720 and adjusting the trimmers C-26, C-19 and C-3 to produce maximum receiver output. The Oscillator should then be shifted to 600 kc. and the receiver tuned to resonate this signal, disregarding the reading at which it is best received. Trimmer C-19 must then be adjusted, simultaneously while rocking the station selector backward and forward through the signal until the maximum output results from the combined operations. C-26 should be rechecked to assure that its adjustment has not changed because of the trimming of C-19. Band X must be aligned at 400 kc. and 150 kc. Tune the test Oscillator to 400 kc. and turn the receiver dial to the same reading. Adjust trimmers C-18, C-9 and C-2 for maximum (peak) receiver output. Then shift the Oscillator to 150 kc. and tune the receiver to pick up this signal, disregarding the dial reading at which it is best received. Adjust trimmer C-47, simultaneously rocking the tuning condenser backward and forward through the signal, until maximum receiver output results from the combined operations. Repeat the alignment of C-18 as above to correct for any change which may have been caused by the adjustment of C-47. Change the receiver so that it is operative and the dial reads 18,000 kc. on the "C" Band. Tune the test Oscillator to 18,000 kc. Then adjust the oscillator trimmer C-16 to produce maximum (peak) output. Two positions of this trimmer will be found which conform with this requirement. The one of least capacitance is correct. Check for the presence of "image" response at 17,080 kc. by shifting the receiver tuning. If it is received at such a point, the trimmer C-16 has been correctly adjusted to the right peak. *No adjustments are to be made during this check.* Tune the receiver back to the 18,000 kc. dial marking, readjust C-16 if necessary, and then tune the detector and antenna capacitors C-1 and C-8 for maximum receiver output. No further adjustments are necessary.

Centering Armature

Refer to Figure 10 showing the pickup inner structure. The armature is shown in its proper relation to the magnet pole pieces, i. e., exactly centered. Whenever this centering adjustment has been disturbed, the screws A, B, and C should be loosened and the armature clamp adjusted to the point where the vertical axis of the armature is at right angles to the horizontal axis of the pole pieces, and centered between them. This centering operation may be facilitated by inserting a small rod or nail into the armature needle hole, using it as a lever to test the angular movement of the armature. The limitation of the movement in each direction will be caused by the armature striking the pole pieces. The proper adjustment is obtained when there is equal angular displacement of the armature and adjustment rod or nail to each side of the vertical axis of the magnet and coil assembly. The screws A and B should then be secured, observing care not to disturb the adjustment of the armature clamp. Then place the pickup in a vise and secure the centering spring-clamp by means of the screw C, allowing the centering spring to remain in the position at which the armature is exactly centered between the pole pieces. With a little practice, the correct adjustment of the armature may be readily obtained. The air gap between the pole pieces and the armature should be kept free from dust, filings, and other such foreign materials which would obstruct the movement of the pickup armature.

Damping Block

The viscoloid block which is attached to the back end of the armature shank serves as a mechanical filter to eliminate undesirable resonances and to cause the frequency response to be uniform. Should it be necessary to replace this damping block, it may be done by removing screw D and the cover support bracket from the mechanism and taking off the old viscoloid block. The surface of the armature which is in contact with the viscoloid should be thoroughly cleaned with fine emery cloth. Then insert the new block so that it occupies the same position as it did originally. Make certain that the block is in correct vertical alignment with the armature. The hole in the new viscoloid block is somewhat smaller than the diameter of the armature in order to permit a snug fit. With the viscoloid aligned on the armature, screw D and the cover support bracket should then be replaced. Heat should be applied to the armature (viscoloid side) so that the viscoloid block will fuse at the point of contact and become rigidly attached to the armature. A special-tip soldering iron constructed as shown in Figure 11 will be found very useful in performing this operation. The iron should be applied only long enough to slightly melt the block and cause a small bulge on both sides.

Replacing Coil

Whenever there is defective operation due to an open or shorted pickup coil, this coil should be replaced. The method of replacement will be obvious upon inspection of the pickup assembly and by study of the cut-a-way illustrations. Make sure that the new coil is properly centered with the hole in the support strip and glued securely in that position. It is important to readjust the armature as previously explained after reassembly of the mechanism. Only rosin core solder should be used for soldering the coil leads in the pickup. This same type of solder should be used when necessary for soldering the centering spring to the armature.

Magnetizing

Loss of magnetization will not usually occur when the pickup has received normal care due to the fact that the magnet and pole pieces are one unit and the magnetic circuit remains closed at all times. When the pickup has been mishandled, subjected to a strong a-c field, jolted, or dropped, there may be an appreciable loss of magnetic strength, in which case it will be necessary to remagnetize the entire structure. This should be done by first removing the cover and then placing the pickup assembly on the poles of a standard pickup magnetizer such as the RCA Stock No. 9549 Pickup Magnetizer and charging the pickup in accordance with the instructions accompanying the magnetizer. It is recommended that the pickup be magnetized while the armature assembly is in place. This will necessitate that one of the poles of the magnetizer be rotated 180 degrees. This will provide proper clearance for the armature clamp assembly. It is preferable to check the polarity of the pickup magnet and to remagnetize it so that the same polarity is maintained.

©John F. Rider, Publisher

REPLACEMENT PARTS

Insist on genuine factory tested parts, which are readily identified and may be purchased from authorized dealers

Stock No.	DESCRIPTION	List Price
	RECEIVER ASSEMBLIES	
11606	Board—Three-terminal phonograph terminal board	$0.22
4427	Bracket—Volume control or high-frequency tone control mounting bracket	.18
5237	Bushing—Variable tuning condenser mounting bushing assembly—Package of 3	.43
11350	Cap—Contact cap—Package of 5	.20
11223	Capacitor—Adjustable capacitor (C19)	.46
11256	Capacitor—Adjustable capacitor (C-47)	.48
11292	Capacitor—22 MMfd. (C7)	.24
11321	Capacitor—33 MMfd. (C33)	.26
11289	Capacitor—50 MMfd. (C11)	.26
11291	Capacitor—115 MMfd. (C21)	.24
5116	Capacitor—175 MMfd. (C35)	.18
11290	Capacitor—400 MMfd. (C48)	.25
11269	Capacitor—800 MMfd. (C46)	.30
4409	Capacitor—1120 MMfd. (C38)	.35
11287	Capacitor—4500 MMfd. (C15)	.30
4868	Capacitor—.005 Mfd. (C34)	.20
4838	Capacitor—.005 Mfd. (C44)	.20
4624	Capacitor—.01 Mfd. (C32)	.54
4858	Capacitor—.01 Mfd. (C37, C49, C50*)	.25
5196	Capacitor—.035 Mfd. (C43)	.18
4886	Capacitor—.05 Mfd. (C30*)	.20
4836	Capacitor—.05 Mfd. (C4, C13, C26)	.30
4885	Capacitor—0.1 Mfd. (C6, C12, C27)	.28
5170	Capacitor—0.25 Mfd. (C23, C28, C36)	.25
11248	Capacitor—4 Mfd. (C41)	1.06
11240	Capacitor—10 Mfd. (C39)	1.08
5212	Capacitor—18 Mfd. (C40)	1.16
11272	Clamp—Antenna cable clamp—Located near antenna terminal	.10
4748	Clamp—Capacitor mounting clamp assembly—for Stock No. 11248	.15
5215	Coil—Antenna coil (A and C Bands)—(L1, L2, L5, L6, C1, C5)	2.32
11325	Coil—Antenna coil (X Band)—(L3, L4, C2)	1.56
5216	Coil—Detector coil (A and C Bands)—(L7, L8, L11, L12, C8, C10)	2.34
11326	Coil—Detector coil (X Band)—(L9, L10, C9)	1.80
5217	Coil—Oscillator coil (A and C Bands)—(L13, L15, C16, C20)	2.20
11327	Coil—Oscillator coil (X Band)—(L14, L23, C18)	1.44
11214	Condenser—Three-gang variable tuning condenser (C5, C14, C22)	4.20
11697	Cover—Phonograph terminal board cover	.12
4340	Lamp—Dial lamp—Package of 5	.60
8041	Plate—R.F. or I.F. coil shield locking plate—Package of 2	.12
11244	Resistor—Voltage divider resistor, comprising one 7500-ohm and one 9200-ohm sections (R18, R19)	1.08
11245	Resistor—Voltage divider resistor, comprising one 148-ohm, one 32-ohm, and one 110-ohm section (R15, R16, R17)	.62
5112	Resistor—1000 Ohm—Carbon type—½ Watt—(R2)—Package of 5	1.00
5114	Resistor—15,000 Ohm—Carbon type—1 Watt—(R5)	.22
11300	Resistor—33,000 Ohm—Carbon type—1/10 Watt—(R4)—Package of 5	.75
11322	Resistor—39,000 Ohm—Carbon type—½ Watt—(R10)—Package of 5	1.08
5029	Resistor—56,000 Ohm—Carbon type—½ Watt—(R13)—Package of 5	1.00
5118	Resistor—100,000 Ohm—Carbon type—½ Watt—(R1, R3, R6)—Package of 5	1.00
11323	Resistor—270,000 Ohm—Carbon type—½ Watt—(R12)—Package of 5	1.00
11172	Resistor—470,000 Ohm—Carbon type—½ Watt—(R14)—Package of 5	1.00
11151	Resistor—2.2 Megohms—Carbon type—½ Watt—(R9, R60, R87)—Package of 5	1.00
5249	Shield—Antenna, detector, or oscillator coil shield	.20
5250	Shield—I.F. transformer shield	.22
11273	Shield—Rectifier Radiotron shield	.25
11222	Socket—Dial lamp socket	.16
4794	Socket—Four-contact rectifier Radiotron socket	.15
11313	Socket—Five-contact Radiotron socket	.18
11198	Socket—Seven-contact Radiotron socket	.15
11236	Switch—Band switch (S1, S2, S3, S4, S5, S6, S7, S8, S9, S10, S11)	2.44
11133	Switch—Power switch (S12)	.62
5238	Terminal—Antenna terminal clip assembly	.14
11238	Tone Control—High-frequency tone control (R20)	.96
11216	Transformer—First intermediate frequency transformer (L16, L17, C24, C25)	2.15
11239	Transformer—Second intermediate frequency transformer (L18, L19, C29, C30, C31, R7, R8)	2.72
11242	Transformer—Power transformer—105-125 Volts—25-50 Cycles	6.52
11243	Transformer—Power transformer—100-130, 140-160, 195-250 Volts—40-60 Cycles—(T1)	4.64
11237	Volume control (R11)	1.20
	DRIVE ASSEMBLIES	
4382	Arm—Band indicator operating arm	.26
10194	Ball—Steel ball—Package of 20	.25
4422	Clutch—Tuning condenser drive clutch assembly—comprising drive shaft, balls, ring, spring and washers—assembled	1.00
11252	Dial—Dial scale	.90
11252	Drive—Variable tuning condenser drive assembly	1.68
4520	Indicator—Station selector indicator pointer	.18
11225	Indicator—Band indicator pointer assembly—comprising indicator pointer, arm, link and stud	.20
3993	Screw—No. 8-32-5/32" square set-screw for band indicator operating arm—Package of 10	.25
4669	Screw—No. 8-32-5/32" set-screw for variable condenser drive assembly—Package of 10	.25
4377	Spring—Band indicator operating arm spring—Package of 5	.25
4378	Stud—Band indicator operating arm stud and nut assembly—Package of 5	.25
	MOTOR ASSEMBLIES	
11703	Governor—Governor complete for phonograph motor—Stock No. 11701 or No. 11702	3.05
11701	Motor—Phonograph turntable motor—110 Volts—50 to 60 Cycles—(M1)	21.20
11702	Motor—Phonograph turntable motor—110 Volts—25 Cycles	33.35
	MOTOR BOARD ASSEMBLIES	
4594	Box—Used needle box (cup)	.30
7084	Cover—Turntable cover	.40
11704	Damper—Turntable rubber damper and damper plate	
4596	Escutcheon—Speed regulator escutcheon plate	.36
4597	Screw—Motor mounting screw assembly—comprising four screws, four lockwashers, four spacers, and four nuts	.22
11696	Turntable—Complete	2.48
11695	Volume Control—Phonograph volume control (R65, S14)	1.60
	ECCENTRIC AUTOMATIC BRAKE SWITCH ASSEMBLIES	
3994	Cover—Eccentric automatic switch cover and screw	.26
10174	Springs—Automatic brake springs—comprising one each of four springs—Package of 2	.50
5696	Switch—Eccentric automatic brake and switch assembly—less switch cover	2.50
3322	Switch—Eccentric automatic switch only—less cover (S13)	.75
	PICKUP AND ARM ASSEMBLIES	
11705	Arm—Pickup arm complete—less escutcheon and pickup unit	4.50
11707	Armature—Pickup armature	.28
6346	Back—Pickup housing back	.45
11709	Coil—Pickup coil (L50)	.58
3521	Cover—Pickup back cover	.18
11708	Cover—Pickup front cover	.15
3737	Damper—Pickup damper—Package of 5	.65
3390	Escutcheon—Pickup arm escutcheon	.46
11706	Pickup Unit—Complete (L50)	4.80
3389	Rod—Eccentric automatic brake trip rod—Package of 5	.40
3387	Screw Assembly—Pickup mounting screw assembly—comprising one screw, one lockwasher and one nut—Package of 10	.40
11549	Screw—Pickup front cover screw—Package of 10	.42
11547	Screw—Pickup needle holding screw—Package of 10	.42
	CABLE ASSEMBLIES	
11700	Cable—Five-conductor shielded cable—approximately 24" long—Connects phonograph volume control to compensator pack and chassis terminal strip	.88
11699	Cable—Radiotron tuning tube cable complete with socket and cover—approximately 25" long	1.32
4573	Plug—Female section of two-contact plug—Used on power cable to motor	.30
4577	Plug—Male section of two-contact plug—Used on motor leads	.30
11382	Resistor—1 Megohm—Carbon type—1/10 Watt—Located in tuning tube socket—(R61)—Package of 5	.75
11381	Socket—Radiotron tuning tube socket and cover	.45
	REPRODUCER ASSEMBLIES	
11232	Board—Terminal board assembly with two lead wire clips	.18
11231	Bolt—Yoke and core assembly bolt and nut	.16
8060	Bracket—Output transformer mounting bracket	.14
11257	Clamp—Cone center suspension clamping nut and screw assembly—Package of 5	.25
11254	Coil—Field coil (L20)	2.00
11233	Coil—Hum neutralizing coil (L21)	.30
11258	Cone—Reproducer cone (L22)—Package of 5	3.85
5118	Connector—Three-contact male connector for reproducer	.25
5119	Connector—Three-contact female connector plug for reproducer cable	.25
9619	Reproducer—Complete	6.05
11253	Transformer—Output transformer (T2)	1.56
11250	Washer—"Bindar's board" "C" washers—Used to hold field coil assembly	.18
	MISCELLANEOUS ASSEMBLIES	
11191	Bracket—Tuning tube mounting bracket—less clamp	.12
11192	Clamp—Tuning tube mounting clamp—less bracket	.12
13694	Compensator—Phonograph input compensator pack—comprising one 150-ohm, one 220-ohm, and one 1000-ohm resistor, one 0.1 Mfd. and one 2 Mfd. capacitor, and one 0.25 H reactor—(R62, R63, R64, C50, C61, L51)	3.80
11337	Escutcheon—Station selector escutcheon	.70
11275	Escutcheon—Radiotron tuning tube escutcheon	.40
11246	Foot—Chassis mounting foot and bracket assembly—Package of 2	.76
6614	Glass—Station selector dial glass	.30
11346	Knob—Station selector knob—Package of 5	.75
11347	Knob—Phonograph volume control, radio volume control, tone control, power switch or range switch knob—Package of 5	.75
4678	Ring—Retaining ring for station selector dial glass—Package of 5	.34
11210	Screw—Chassis mounting screw assembly—Package of 4	.28
11348	Screw—No. 8-32-7/16" set-screw for knob—Stock No. 11346—Package of 10	.32
3391	Spring—Motor board mounting spring assembly—comprising one bolt, one "C" washer, two cup washers, one bottom spring, one lockwasher, and one cap nut	.50
11349	Spring—Retaining spring for knob—Stock No. 11347—Package of 5	.15

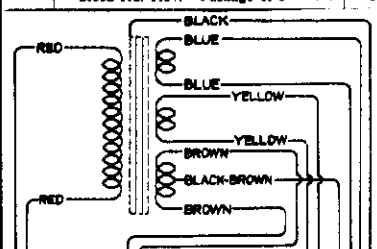

Figure 7—Standard Power Transformer Connections

Pri. Res. =5.42 ohms total
Sec. Res. = 470 ohms total

MODELS 1OT,1OK
Schematic

RCA MFG. CO., INC.

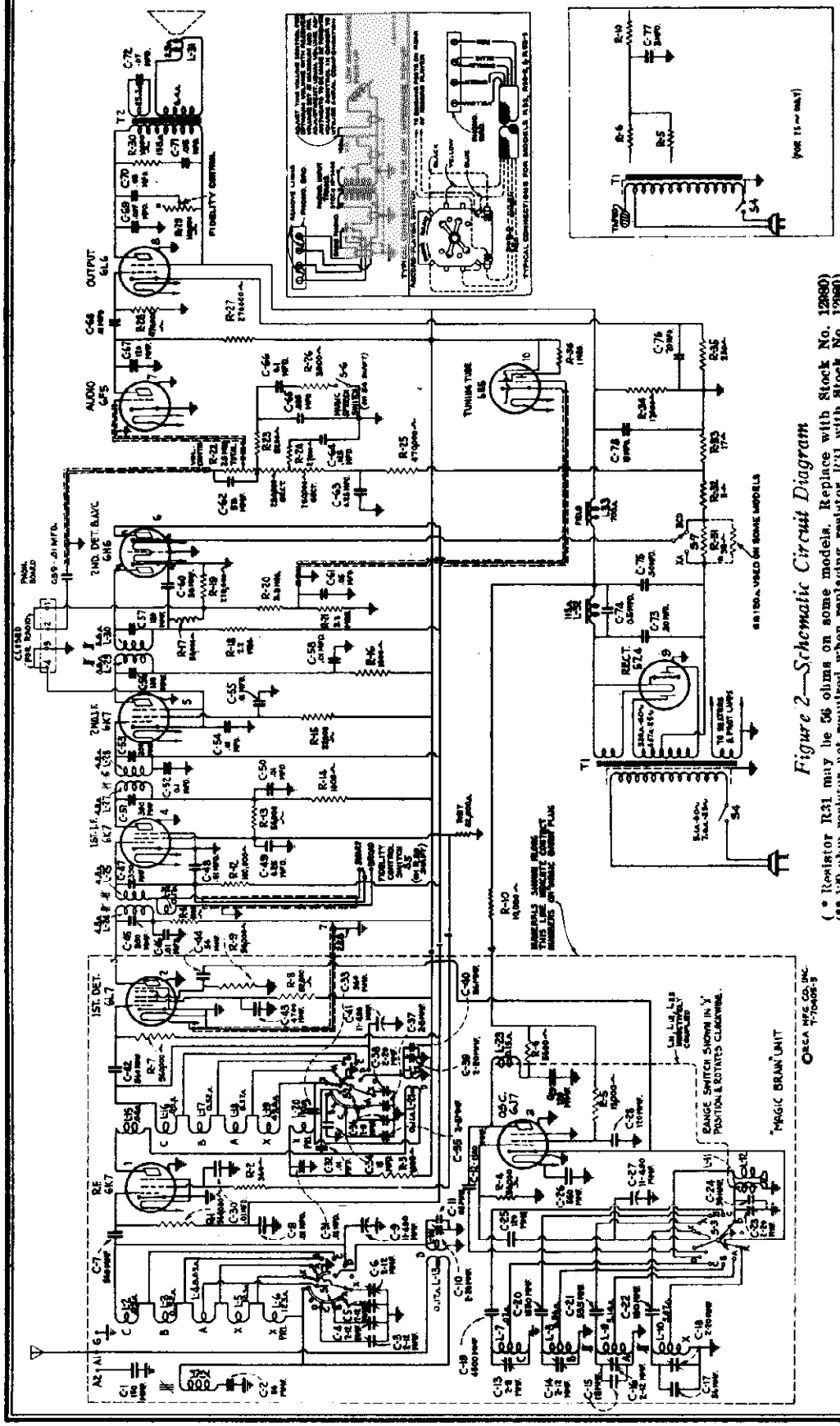

Figure 2—Schematic Circuit Diagram

(* Resistor R31 may be 56 ohms on some models. Replace with Stock No. 12980)
(** 120-ohm resistor not required when replacing resistor 1031 with Stock No. 12980)

FREQUENCY RANGES

"Long Wave" (X)	150-410 kc
"Standard Broadcast" (A)	530-1,800 kc
"Medium Wave" (B)	1,800-6,400 kc
"Short Wave" (C)	6,400-23,000 kc
"Ultra Short Wave" (D)	23,000-60,000 kc

ALIGNMENT FREQUENCIES

"Long Wave" (X)	175 kc (osc.), 350 kc (osc., det., ant.)
"Standard Broadcast" (A)	600 kc (osc.), 1,500 kc (osc., det., ant.)
"Medium Wave" (B)	6,000 kc (osc., det., ant.)
"Short Wave" (C)	20,000 kc (osc., det., ant.)
"Ultra Short Wave" (D)	57,000 kc (osc., det., ant.)
Intermediate Frequency	460 kc

©John F. Rider, Publisher

RCA MFG. CO., INC.

MODELS 10T, 10K
Chassis Wiring

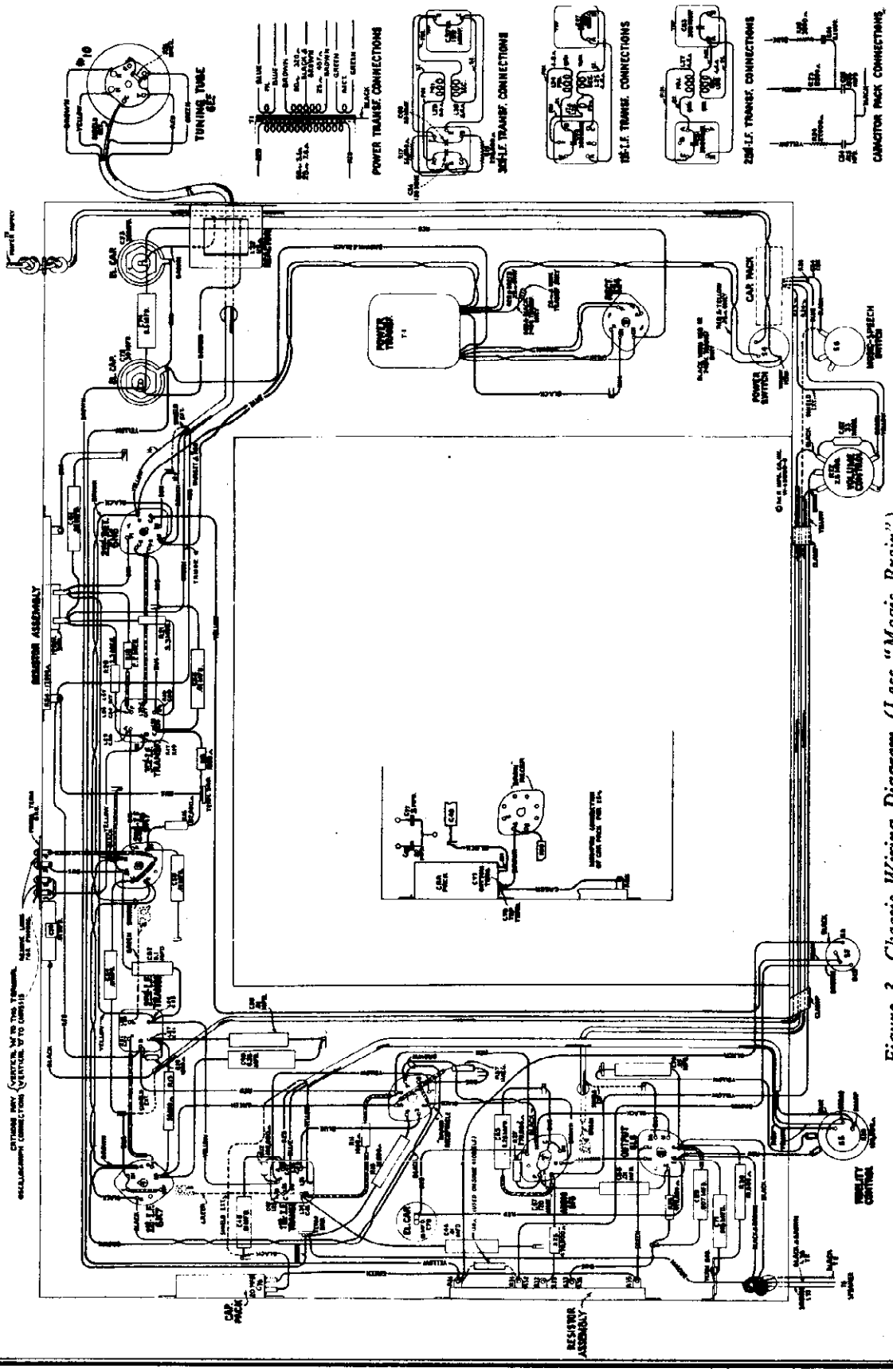

Figure 3—Chassis Wiring Diagram (Less "Magic Brain")

Pilot Lamps (4)..... Mazda No. 46, 6.3 volts, 0.25 ampere

POWER SUPPLY RATINGS

Rating A..... 105-125 volts, 50-60 cycles, 120 watts
Rating B..... 105-125 volts, 25-60 cycles, 120 watts
Rating C..... 100-130/140-160/195-250 volts, 40-60 cycles, 120 watts

©John F. Rider, Publisher

MODELS 10T,10K
"Magic Brain"
Chassis Wiring

RCA MFG. CO., INC.

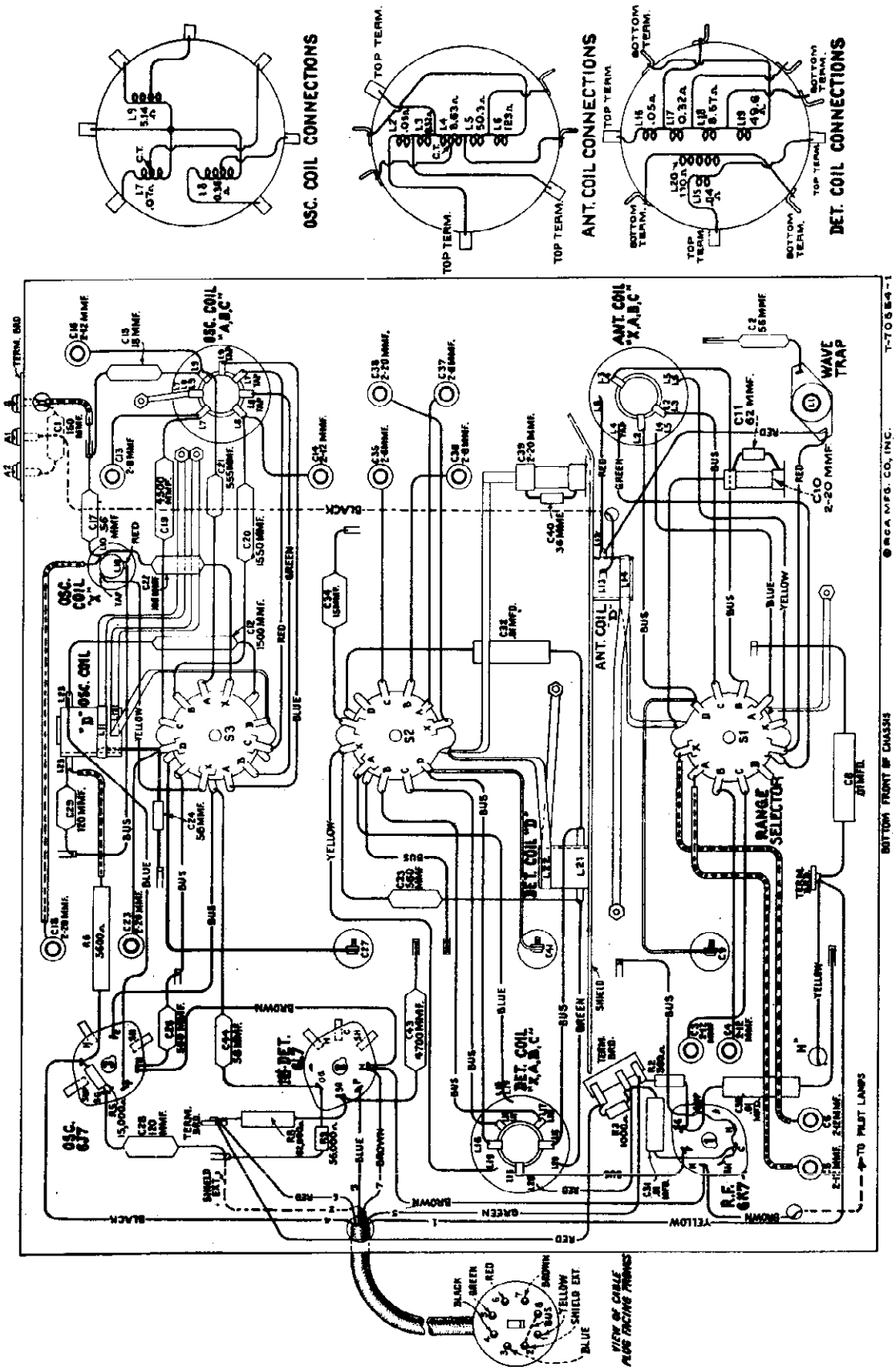

Figure 4—"Magic Brain" Wiring Diagram

POWER OUTPUT
Undistorted..... 5 watts
Maximum..... 9 watts

LOUDSPEAKER
Type..... Electrodynamic
Impedance (v.c.)..... 3.4 ohms at 400 cycles

©John F. Rider, Publisher

RCA MFG. CO., INC.

For Fig. 5- Alignment Apparatus Connections
see Fig. 5 Model 9T & 9K2

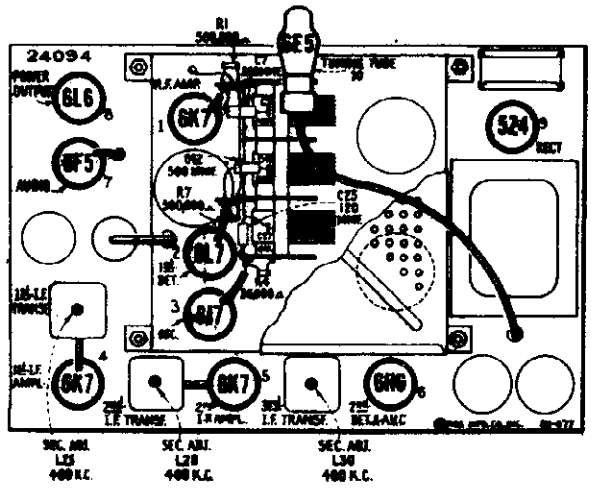

Figure 1—Radiotron and I-F Trimmer Locations

Selector Dial

Figure 11 illustrates the relation of the various parts of the dial mechanism when in its "Standard broadcast" position with the range switch likewise turned to its "Standard broadcast" position. In re-assembling the dial after repairs, see that the gears are meshed in accordance with the diagram, at the same time noting that the range switch is in its "Standard broadcast" position and the lever attached to the range-switch shaft placed in the position shown.

To adjust the dial mechanism, set the range switch to its "Standard broadcast" position. Place a straight-edge across the center of the dial so that its edge is even with the lower (end) marking at both the low-frequency and high-frequency ends of the dial. Under such conditions the straight-edge should be parallel with the top of the chassis base. If the straight-edge is not parallel with the top of the chassis base, loosen the nut on the rear of the roller link pivot stud and move the stud up or down until the link roller moves the dial to the desired position so that the end calibration marks obtain the position mentioned above. Tighten the nut on the roller link pivot stud.

Set the gang tuning condenser to its maximum capacity position. Adjust the dial pointer to the low-frequency (end) mark on "Standard broadcast" scale. This is a friction adjustment.

With the gang tuning condenser plates still in full mesh, loosen the two set screws on the vernier-dial hub. Rotate the vernier dial until the "0" marking is in a vertical plane above the center of the shaft. Tighten set screws.

Antenna and Ground Terminals

These receivers are equipped with an antenna-ground terminal board having three terminals. These terminals are marked "A2," "A1," and "G," the latter being the ground terminal and should always be connected to a good external ground. The transmission-line leads of the RCA RK-40A antenna system should be connected to terminals "A2" and "A1." The receiver coupling units of the RCA RK-40 and the RCA Spider-Web antenna systems should be connected to terminals "A1" and "G." Connect a single-wire antenna to terminal "A1."

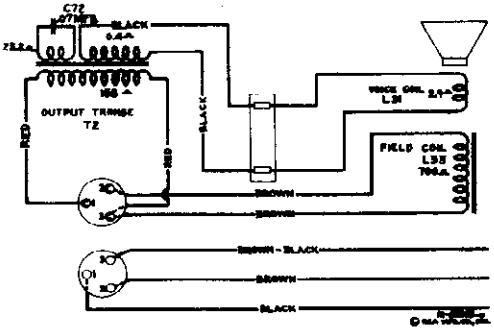

Figure 10—Loudspeaker Wiring

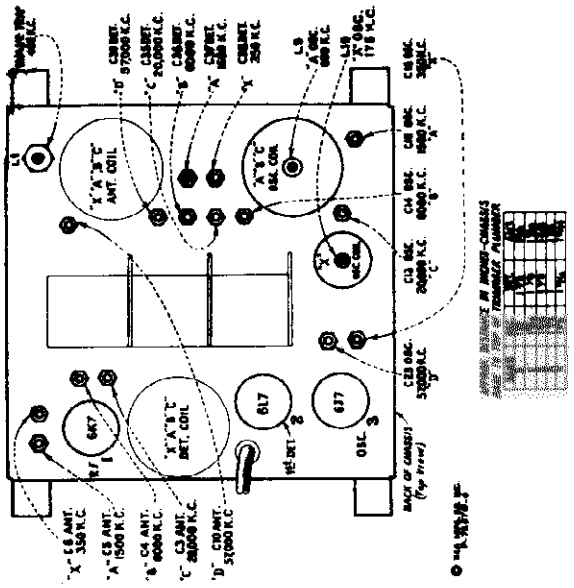

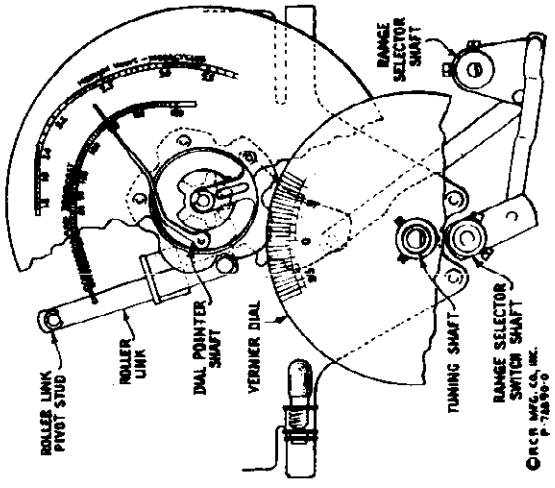

Figure 11—Selector Dial Change Mechanism

Figure 6—"Magic Brain" Trimmer Locations

©John F. Rider, Publisher

MODELS 10T, 10K
Resistance
Voltage, Transformer

RCA MFG. CO., INC.

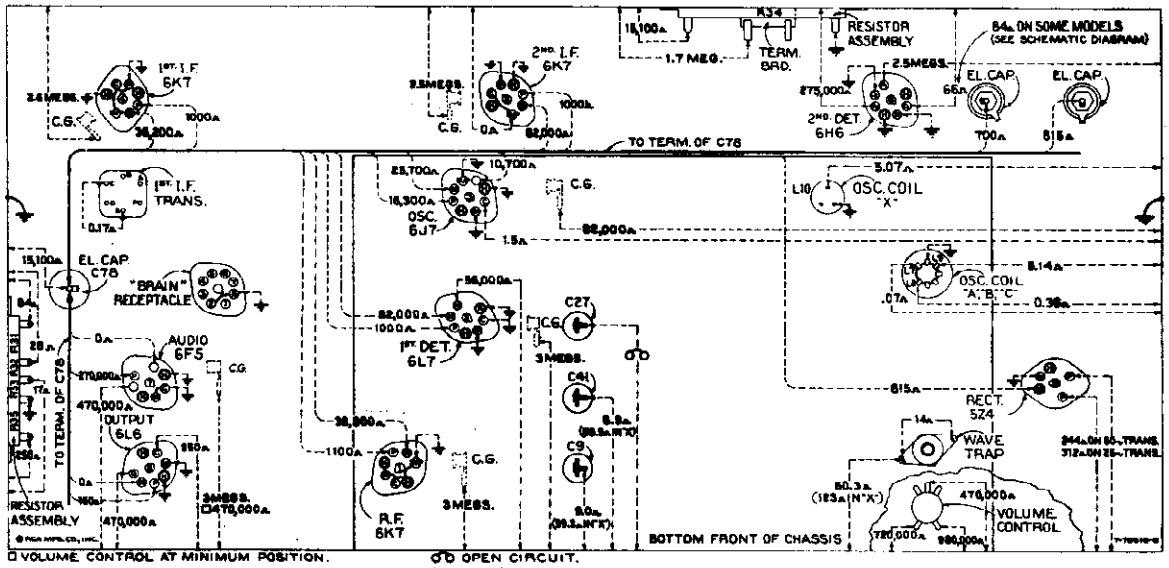

Figure 7—Resistance Diagram

Power supply disconnected—Radiotrons in sockets—Tuning condenser in full-mesh—Range selector in "Standard broadcast" position—Volume control maximum—Fidelity control counter-clockwise

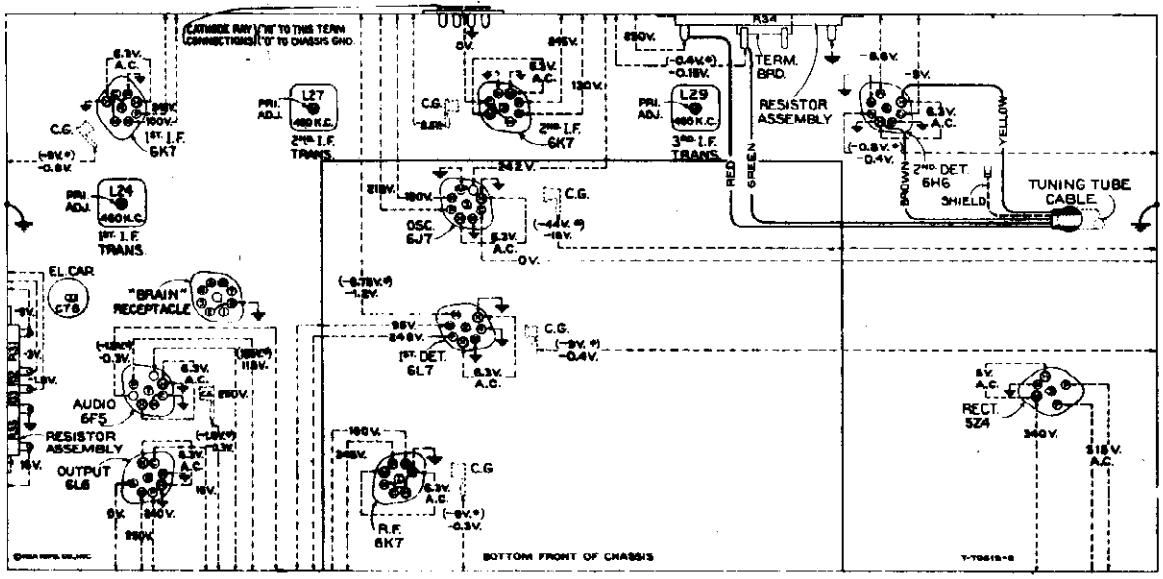

Figure 8—Radiotron Socket Voltages, Coil, and I-F Trimmer Locations

Measured at 115 volts, 60-cycle supply—Tuned to approximately 1,000 kc—No signal being received—Volume control minimum—Fidelity control counter-clockwise

Radiotron Cathode Current Readings
Measured with Milliammeter Connected at Tube Socket Cathode Terminals under Conditions Similar to Those of Voltage Measurements

(1)	RCA-6K7—R-F	4.6 ma.
(2)	RCA-6L7—1st Det.	3.0 ma.
(3)	RCA-6J7—Osc.	6.0 ma.
(4)	RCA-6K7—1st I.F.	5.0 ma.
(5)	RCA-6K7—2nd I.F.	7.0 ma.
(6)	RCA-6H6—2nd Det.-A.V.C.	—
(7)	RCA-6F5—A.F.	0.3 ma.
(8)	RCA-6L6—Power	65 ma.
(9)	RCA-5Z4—Rect.	110 ma.*
(10)	RCA-6E5—Eye	3.0 ma.

(* Cannot be measured at socket)

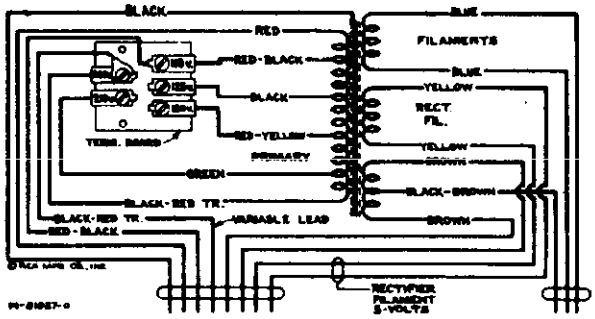

Primary resistance—10.1 ohms total
Secondary resistance—226 ohms total

—Universal Transformer

NOTE: Two voltage values are shown for some readings. The value shown in parenthesis (*) indicates operating conditions without voltmeter loading. The other value (generally lower) is the actual measured voltage

©John F. Rider, Publisher

RCA MFG. CO., INC.

MODELS 10T,10K
Circuit Data
Alignment,Part 1

General Description

These receivers represent the result of thorough development, design, and substantial manufacture. Noteworthy technical improvements have been applied in achieving marked advantages of operation, and efficiency of performance.

Model 10T is a ten-tube, table-type, "Magic Brain" superheterodyne receiver with an eight-inch electrodynamic loudspeaker. Model 10K employs an identical radio chassis, is of the console-type, has a twelve-inch electrodynamic loudspeaker, and incorporates the newly developed "Magic Voice." Design features incorporated in these receivers include built-in doublet antenna coupler, "Magic Brain", improved plunger-type air-dielectric adjustable trimming capacitors in the antenna, detector, and oscillator coil circuits; tuned r-f amplifier, high-efficiency first detector (converter) with separate oscillator, two-stage i-f amplifier, beam-type power amplifier, magnetite core adjusted i-f transformers, low-frequency oscillator tracking, and wave-trap, range-selector sensitivity control; fidelity control; two-point aural compensated volume control, music-speech switch; automatic volume control, phonograph terminal board, new selector dial; and a dust-proof electrodynamic loudspeaker.

Service convenience has been a controlling factor in the layout of the chassis parts and wiring. The assembly of these various elements is such that the number of conductors is minimized, with all important connections being readily accessible. Trimming adjustments are located at accessible points. A double tuning-knob arrangement permits the choice of either a twenty-to one or a hundred to one dial drive ratio. The latter permits ease of tuning, especially in the "Medium wave", "Short wave", and "Ultra short wave" bands.

Circuit Arrangement

The conventional type of superheterodyne circuit is used. It consists of an r-f amplifier stage, first-detector (converter) stage, separate oscillator stage, two i-f amplifier stages, a diode detector—automatic-volume-control stage, an audio voltage-amplifier stage, a beam-type power-amplifier stage, a tuning indicator "Magic Eye", and a full-wave rectifier.

"Magic Brain"

The new "Magic Brain" is constructed as a separate, self-contained, completely shielded, five-band, oscillator-detector-antenna-tuning unit which plugs into the main chassis.

A single-wire antenna, or a doublet antenna, when connected to the proper input terminals of the receiver, is coupled to the control grid of the RCA-6K7 r-f amplifier tube through the tuned r-f transformer consisting of L6, L7, L8, L3, and L3 (except when range selector is in "Ultra short wave" position). The primary coil L13 of the "Ultra short wave" (D) band tuned r-f transformer remains in the antenna circuit at all times. A unique method of switching is used. In the "Long wave" (X) band, L6 becomes the primary with L5, L4, L3, and L2 as secondary. In the "Standard broadcast" (A) band, L5 becomes the primary with L4, L3, and L2 as secondary (L6 shorted out). In the "Medium wave" (B) band, L4 becomes the primary with L3 and L2 as secondary (L6 and L5 shorted out). In the "Short wave" (C) band, L3 becomes the primary with L2 as secondary (L6, L5, L4, and tap on L4 shorted out). The tap on L4 is provided to prevent interaction with L3 and L2 when operating receiver in "Short wave" band. In the "Ultra short wave" (D) band, L6, L5, L4, and L3 are shorted out and grounded, and secondary L14 is placed in shunt with L2. The latter connection prevents undesirable interaction of L2 with L14. This method of switching reduces the total number of coils and leads, and results in having a low-loss primary and secondary winding for each band with high efficiency of operation.

The band switching of the detector circuits is similar to that of the antenna circuits. Coils L11, L21, and L20 are always connected in series with the plate circuit of the RCA-6K7 r-f amplifier tube in the "Long wave" (X) band, L19, L17, and L16 are connected in series as the secondary circuit. The ground of the coil system is at the low end of L19. L20 acts as the primary which transfers energy to the secondary L19. Capacitor C33 resonates primary L20 at the proper frequency. In the "Standard broadcast" (A) band, L18, L17, and L16 are connected in series as the secondary circuit. The ground of the coil system is now between L18 and L19. L19 is used as the primary and is resonated at the proper frequency by capacitors C34 and C35 which are in shunt with this coil. Capacitor C33 is connected to transfer energy to the primary coil L19. In the "Medium wave" (B) band, L17 and L16 are connected in series as the secondary. The ground of the coil system is now between L17 and L18. L18 is used as the primary and is resonated at the proper frequency by capacitor C34 which is in shunt with this coil. L19 is shorted by the range selector. Capacitor C33 transfers the r-f energy from the plate circuit to the primary L18. In the "Short wave" (C) band, L16 is the secondary. The ground of the coil system is now between L16 and L17. L17 is used as the primary and is resonated to the proper frequency by capacitor C34. In addition, L15 acts as a high-frequency primary which resonates above 20 mc and improves the gain at the high-frequency end of the "Short wave" band. Coils L19 and L18 are shorted by the range selector. L21 is effectively r-f bypassed in this position by capacitor C32. In the "Ultra short wave" (D) band, L22 is the secondary, or grid coil, and consists of approximately a single turn of silver plated strap around a 7/8 inch coil form. The primary coils, L21 and L15, L12 in series on this band, with L21 acting as a low-frequency primary and L15 as a high-frequency primary. L16 is shunted by L22 instead of being shorted directly by the range selector. Any inductive effect of L16 is thus eliminated. L19, L18, and L17 are shorted directly by the range selector.

Separate windings, with the exception of L23, are employed in the oscillator stage for each position of the range selector. L23 (inductively coupled to L11 and L12) is placed in the oscillator plate circuit to provide additional feed-back when operating receiver on the "Ultra short wave" (D) band. This coil is effectively r-f bypassed by capacitor C32, when range selector is in the "Short wave" (C) position, to prevent undesirable reactions. Its effect on the remaining bands is negligible. The inherent stability of the oscillator circuit provides minimum frequency drift which is especially advantageous for high-frequency reception. The locally-generated signal is capacitance coupled to grid No. 3 of the RCA-6L7 first detector.

The output of the "Magic Brain" is fed to the r-f amplifier through the plug-in cable. This cable also supplies all power required by the "Magic Brain" unit.

I-F Amplifier

The intermediate-frequency amplifier consists of two RCA-6K7 tubes in a two-stage, transformer-coupled circuit. The windings of all three i-f transformers are resonated by fixed capacitors, and are adjusted by molded magnetite cores (both primary and secondary) to tune to 460 kc. A third winding L26, in the first i-f transformer, is placed in series with the main secondary L25 when the fidelity control switch S5 is thrown to "broad" position (see figure 2), thereby increasing the coupling between the primary and secondary circuits with consequent broadening of the band width of the i-f amplifier. The increased band width of the i-f amplifier therefore causes less attenuation of the higher audio modulation side band frequencies, permitting higher fidelity reception.

Detector and A.V.C.

The modulated signal, as obtained from the output of the last i-f stage, is detected by an RCA-6H6 twin-diode tube (No. 2 diode). The audio frequency secured by this process is transferred to the a-f system for amplification and final reproduction. The d-c voltage which results from detection of the signal is used for automatic volume control. This voltage, which develops across resistors R17 and R19, is applied as automatic control grid bias to the r-f, first-detector, and i-f tubes. The No. 1 diode of the RCA-6H6 is used to supply residual bias to the controlled tubes under conditions of little or no signal. This diode, under such conditions, draws current which flows through resistors R18, R17, and R19, thereby maintaining the desired operating bias on such tubes. On application of signal energy above a certain level, however, the auxiliary bias diode ceases to draw current and the a.v.c. diode takes over the biasing function. The sensitivity of the receiver is increased in the "Ultra short wave" (D), "Short wave" (C), and "Medium wave" (B) bands by reducing the residual bias on the above mentioned controlled tubes with switch S7 which is operated by the range selector control.

Audio System

The manual volume control consists of an acoustically tapered potentiometer in the audio circuit between the output of the detector-diode and the input grid of the RCA-6F5 audio voltage-amplifier tube. This control has a two-point tone-compensating filter connected to it so that the correct aural balance will be obtained at different volume settings. Phonograph terminals are provided to feed the output of an external phonograph pickup to the control grid of the audio amplifier through this aurally compensated volume control.

The output of the voltage amplifier is resistance-capacitance coupled to the control grid of the RCA-6L6 power-output tube. The output of this stage is transformer coupled to the voice coil of the electro-dynamic speaker.

The "Music-speech" control consists of a switch S6 which, in the "Speech" position, places an additional capacitor C66 and resistor R26 in shunt with the capacitor C61 in one of the tone compensating filters. This reduces the low-frequency response of the amplifier and provides maximum intelligibility of the voice frequencies.

Fidelity Control

The fidelity control consists essentially of the combination of a conventional high audio-frequency tone control, including capacitor C70 and variable resistor R29 in shunt with the plate circuit of the output tube, and means for changing the band width of the i-f amplifier. It performs in the following manner:

When the fidelity control is in its extreme counter-clockwise position, the resistance of R29 is a minimum, and winding L26 is disconnected from the i-f circuit (S5 in sharp position, see figure 2). Capacitor C70 is most effective at this point causing maximum attenuation of the higher audio frequencies. As the control is turned clockwise, placing more resistance in series with capacitor C70, the capacitor becomes less and less effective, and the upper frequency range of the audio amplifier is extended. When the fidelity control nears its extreme clockwise position, resistor R29 is disconnected and switch S5, operated by fidelity control shaft, places winding L26 (first i-f transformer) in series with L25 (S5 in broad position).

"Magic Eye"

An RCA-6E5 cathode-ray tuning tube is used as a means of visually indicating when the receiver is accurately tuned to the incoming signal. This tube consists of an amplifier section and a cathode-ray section built in the same glass envelope. A portion of the signal voltage developed across resistor R19 is used to actuate the grid of the amplifier section. Maximum voltage is applied to this grid when the receiver is tuned to resonance with an incoming carrier. This condition is evidenced by the minimum width of the dark sector on the fluorescent screen.

"Magic Voice" (Model 10K)

Model 10K is designed with a cabinet incorporating the "Magic Voice." This is accomplished by having the rear of the speaker compartment completely enclosed by a tight-fitting back.

Five metal open-end pipes of equal diameter but of three different lengths are inserted in holes in the cabinet base and extend upward in the speaker compartment. The effect is to cause the lower-frequency waves, reaching the front of the cabinet through the pipes, to arrive approximately in-phase giving extended low-frequency response without boominess, or cabinet resonance.

SERVICE DATA

The various diagrams in this booklet contain such information as will be needed to locate causes for defective operation if such develops. The values of the various resistors, capacitors, coils, etc., are indicated adjacent to the symbols signifying these parts on the diagram. Identification tables, such as C1, L2, R1, etc., are provided for reference between the illustrations and the Replacement Parts List. The coils, reactors, and transformer windings are rated in terms of their d-c resistance only. Resistance values of less than one ohm are generally omitted.

Alignment Procedure

There are seventeen adjustments required for the alignment of the oscillator, first-detector, and antenna-tuned circuits; one adjustment for the wave-trap; and six adjustments for the i-f system. Fifteen of these adjustments are made with plunger-type air trimming capacitors and require the use of an RCA Stock No. 12636 Adjusting Tool. Each of these capacitors has a lock nut for securing the plunger in place after adjustment. The remaining nine adjustments are made by means of screws attached to molded magnetite cores. These cores change the inductance of the particular coils in which they are inserted to provide exact alignment. All of these adjustments are accurately made during manufacture and should remain in proper alignment unless affected by abnormal conditions of climate or purported alterations for servicing, or unless altered by other means. Loss of sensitivity, improper tone quality, and poor selectivity are the usual indications of improper alignment. Such conditions will usually exist simultaneously. Correct performance of this receiver can only be obtained when these adjustments have been made by a skilled service engineer with the use of adequate and reliable test equipment. The manufacturer of this receiver has such test equipment available for sale through its distributors and dealers.

The extensive frequency range of these receivers necessitates a more or less involved method of alignment. However, if the following directions are carefully applied in the sequence given, normal performance of the instruments will be obtained.

The plunger-type air trimming capacitors have their approximate plunger settings tabulated on figure 6. If the plungers have been disturbed from their original adjustments, they may be roughly set to the specified dimensions prior to alignment.

In performing services on the "Magic Brain", the leads should be restored to their original positions, since the lead-dress is important for proper operation and dial calibration.

Precautionary Dressing of Leads for "Magic Brain" Alignment
(Refer to Figure 4)

Band "X"

1. Keep blue lead A of S1 to antenna coil L4-5 dressed away from chassis, and from yellow lead X of S1 to antenna coil L5-6.
2. Run lead from C10 to S1 should be as short as possible.
3. Keep blue lead A of S2 to detector coil L18-19 clear of chassis, coil shield, coil, and other leads.
4. Keep spaghetti lead C6 to X of S1 apart from spaghetti lead C5 to A of S1, and from chassis.

Band "A"

1. Keep green lead terminal S1 to antenna coil tap L4 away from chassis, coil shield, and coil.
2. Keep spaghetti lead C5 to A of S1 apart from spaghetti lead C6 to X of S1 and from chassis.

Band "C"

Lead from C19 to oscillator coil L7 should be maintained as short and straight as possible.

For alignment, the test-oscillator frequency should be quite accurate. A convenient and reliable means of accurately checking the frequency of test oscillators, receivers, etc., is the RCA Stock No. 9572 Crystal Calibrator.

If the test-oscillator signal cannot be heard as the receiver (heterodyne) oscillator air-trimmer plunger is changed from its minimum-capacity to maximum-capacity position (receiver dial and test oscillator set to the specified frequencies, and the correct oscillator air-trimmer used) it may be an indication that the test-oscillator frequency is outside the range covered by the air-trimmer. Under such conditions, when a more accurate setting of the test oscillator cannot be determined, see the oscillator air-trimmer plunger settings given on figure 6. Tune the test oscillator until the signal is heard in the speaker. Each of two test-oscillator settings (the fundamentals or the harmonics of which are 930 kc apart) produce a signal. The lower-frequency test-oscillator setting should be used as this places the test-oscillator (signal) frequency 460 kc below the frequency of the receiver heterodyne oscillator.

Holes are provided in the top of the r-f and antenna coil cans on some models to enable a tuning check with the RCA Stock No. 6679 Tuning Wand. The hole in the top of the detector coil can has a cinch button which must be removed before insertion of the tuning wand. When the brass end of the wand is inserted in the coil, the inductance of the coil is decreased. If this results in an increase of output, the respective air-trimmer capacitance should be decreased (plunger pulled out). If inserting the iron end of the tuning wand causes an increase in output, resulting from an increase of inductance of the coil, the respective air-trimmer capacitance should be increased (plunger pushed in). If the range of the air trimmer is not sufficient to give the desired results, the lead-dress may be changed in the particular circuit being aligned, so as to cause the circuit to resonate within the range of the trimmer. An increase in the capacity-to-ground of the circuit will be required if the iron end of the tuning wand causes an increase of signal output when the air-trimmer plunger is full-in, while a decrease in the capacity-to-ground will be required if the brass end of the tuning wand causes an increase in signal output when the air-trimmer plunger is full-out.

Two methods of alignment are applicable—one requires use of the cathode-ray oscilloscope, and the other requires a voltmeter or glow-type indicator. The cathode-ray alignment method is advantageous in that the indication provided is in the form of a wave-image which represents the resonance characteristics of the circuit being tuned. This method is preferred because of the i-f characteristics of these receivers. This type of alignment is possible through use of apparatus such as the RCA Stock No. 9538 Frequency Modulator and the RCA Stock No. 9545 Cathode-Ray Oscillograph. If this equipment is not available, an approximate alignment may be performed by the output-indicator method with an instrument such as the RCA Stock No. 4317 Neon Glow Indicator attached across the loudspeaker voice coil. Alignment by this method is similar to the cathode-ray method outlined below except that the receiver volume control should be at maximum, the trimmers adjusted to peak response and the test-oscillator sweeping operations omitted. Either of these methods require the use of a reliable test oscillator such as the RCA Stock No. 9595.

Cathode-Ray Alignment

Make alignment apparatus connections shown on figure 5. Remove the plug of the frequency-modulator cable from the test-oscillator jack. Connect the receiver chassis to a good external ground. Connect oscillograph "Vertical" input terminals as indicated on figure 3. Set oscillograph power switch to "On" and adjust "Intensity" and "Focus" controls to give a clearly defined spot, or line, on the screen. Set oscillograph "Ampl A" switch to "On," "Vertical gain" control full-clockwise, "Ampl B" switch to "Timing," "Range" switch to No. 2 position, and "Timing" switch to "Int." Place the "Sync" control, "Freq." control, and "Horizontal gain" control to about their mid-positions. For each of the following adjustments, the test-oscillator output must be regulated so that the image obtained on the oscillograph screen will be of the minimum size for accurate observation. The receiver volume-control setting is optional.

I-F Adjustments

(a) Set fidelity control to counter-clockwise position. Connect the "Ant." output of the test oscillator to the grid cap of RCA-6K7 second i-f tube (with grid lead in place) through a .001-mfd. capacitor, with "Gnd." to receiver chassis. Tune the test oscillator to 460 kc and place its modulation switch to "On" and its output switch to "Hi."

(b) Turn on the receiver and test oscillator. Increase the output of the test oscillator until a deflection is noticeable on the oscillograph screen. The figures obtained represent several waves of the detected signal, the amplitude of which may be observed as an indication of output. Cause the wave-image formed (400-cycle waves) to be spread completely across the screen by adjusting the "Horizontal gain" control. The image should be synchronized and made to remain motionless by adjusting the "Sync." and "Freq." controls.

(c) Adjust the two magnetite core screws L30 and L29 (see figures 1 and 8) of the third i-f transformer (one on top and one on bottom) to produce maximum vertical deflection of the oscillographic image. This adjustment places the transformer in exact resonance with the 460-kc signal.

(d) The sweeping operation should follow using the frequency modulator. Shift the oscillograph "Timing" switch to "Ext." Insert plug of frequency-modulator cable in test-oscillator jack. Turn the test-oscillator modulation switch to "Off." Turn on the frequency modulator and place its sweep-range switch to "Hi."

(e) Increase the frequency of the test oscillator by slowly turning its tuning control until two separate, distinct, and similar waves appear on the screen. If only one wave appears, increase the "Freq." control on the oscillograph to obtain two waves. These waves will be identical in shape, totally disconnected, and appear in reversed positions. They will have a common base line, which is discontinuous. Adjust the "Freq." and "Sync." controls of the oscillograph to make them remain motionless on the screen. Continue increasing the test-oscillator frequency until these forward and reverse curves move together and overlap, with their highest points exactly coincident. This condition will be obtained at a test-oscillator setting of approximately 575 kc.

(f) With the images established as in (e), re-adjust the two magnetite core screws L30 and L29 on the third i-f transformer so that they cause the curves on the oscillograph screen to become exactly coincident throughout their lengths and have maximum amplitude.

(g) Without altering the adjustments of the apparatus, shift the "Ant." output of the test oscillator to the grid cap of the RCA-6K7 first i-f tube (with grid lead in place), through a .001-mfd. capacitor. Regulate the test-oscillator output so that the amplitude of the oscillographic image is approximately the same as used for adjustment (f) above.

(h) The two second i-f transformer magnetite core screws L28 and L27 (one on top and one on bottom) should then be adjusted so that they cause the forward and reverse curves to become coincident throughout their lengths and have maximum amplitude.

(i) Without altering the adjustments of the apparatus, shift the "Ant." output of the test oscillator to the input of the i-f system, i.e., to the grid cap of the RCA-6L7 first detector, (with grid lead in place) through a .001-mfd. capacitor. Regulate the test-oscillator output so the amplitude of the oscillographic image is approximately the same as used for adjustment (h) above.

(j) The two first i-f transformer magnetite core screws L25 and L24 (one on top and one on bottom) should then be adjusted so that they cause the forward and reverse waves to become coincident throughout their lengths and have maximum amplitude.

(k) Note width of oscillographic image at a point which is 50% of maximum amplitude. Turn receiver fidelity control to extreme clockwise position. Note width of oscillographic image at a point which is 50% of maximum amplitude. Under normal conditions the latter measurement should be approximately 60% greater in width than the former measurement. The image should also appear slightly double humped. These conditions indicate proper broadening of the band width of the i-f amplifier. Turn range selector to "Medium wave" (B) band and note increase of amplitude. The amplitude should increase several times. It may be necessary to decrease output of test oscillator to keep image on screen. Turn receiver fidelity control to extreme counter-clockwise position and proceed to "R-F Adjustments."

R-F Adjustments

Make receiver dial adjustments as outlined by "Selector dial," figure 11. Alignment must be made in sequence of "Wave-trap," "Ultra short wave" band, "Short wave" band, "Medium wave" band, "Standard broadcast" band, and "Long wave" band.

"Wave-Trap" Adjustment

(a) Connect the "Ant." output of the test oscillator to the antenna terminal "A1" through a 200-mmfd. (important) capacitor. Remove the plug of the frequency-modulator cable from the test-oscillator jack. Turn test-oscillator modulation switch to "On." Shift the oscillograph "Timing" switch to "Ext." Place receiver range selector in "Standard broadcast" position. Set the receiver dial to a position of no extraneous signals near 600 kc. Tune the test oscillator to 460 kc. Adjust the wave-trap magnetite core screw L1 to the

©John F. Rider, Publisher

MODELS 10T,10K
Alignment,Part 2
Parts List

RCA MFG. CO., INC.

point which causes minimum amplitude of output (maximum suppression of signal) as shown by the waves on the oscillograph. An increase of the test-oscillator output may be necessary before this point of minimum amplitude, obtained by correct adjustment of wave-trap screw, becomes apparent on oscillograph screen.

"Ultra Short Wave" Band

(b) Connect the "Ant." output of the test oscillator to the antenna terminal "A1" of the receiver through a 300-ohm resistor. Set the receiver range selector to its "Ultra short wave" position and its dial pointer to 57,000 kc. Adjust the test oscillator to 19,000 kc. The third harmonic of 19,000 kc is used for this adjustment. If the indication on the oscillograph screen is not sufficient for the following adjustments at 57,000 kc, the vertical-input terminals of the cathode-ray oscillograph may be connected thus: "Hi" to the plate contact of the RCA-6L6 power-output tube socket with the "0" terminal to chassis-ground. The receiver should be turned off while making this connection since the plate potential is impressed across the oscillograph input and a severe shock will result if contact is made between these two points. If this connection is made, advance the receiver volume control to its maximum position.

Adjust oscillator air-trimmer C23 for maximum (peak) output. Two positions, each producing maximum output, may be found. The position of minimum capacitance (plunger near out) should be used. This places the receiver heterodyne oscillator 460 kc higher in frequency than the incoming signal. Tighten lock nut. Adjust the detector air-trimmer C39, while slightly rocking the gang tuning condenser back and forth through the signal. Two peaks may be found on this trimmer which produce maximum output. The peak with maximum capacitance (plunger near in) should be used. Tighten lock nut. Check the image frequency by changing the receiver dial setting to 56,000 kc. If the image signal is received at this position, the adjustment of the oscillator air-trimmer C23 has been correctly made. No adjustments should be made while checking for the image signal.

(c) Re-tune receiver for maximum response to 57,000 kc (*not image response*) without disturbing test-oscillator adjustments. Change test oscillator to 6,800—14,000 kc range. Tune test oscillator until signal is heard in speaker (should occur at approximately 14,250 kc, fourth harmonic of test oscillator used). Two test-oscillator settings (230 kc apart) will produce a signal at this point. The lower frequency test-oscillator setting should be used, as this places the test oscillator harmonic 460 kc below the frequency of the receiver heterodyne oscillator. Tune receiver for maximum response at a dial setting of approximately 28,500 kc (image should tune in at a dial setting approximately 27,580 kc) without altering test oscillator adjustment. Test oscillator second harmonic of 14,250 kc is used for the following check. Check calibration of receiver dial. A receiver dial reading of less than 28,500 kc indicates that the inductance of the oscillator secondary coil L11 is too low and should be increased. If the receiver dial reading is greater than 28,500 kc, the inductance of L11 is too high and should be decreased. If it is necessary to change the inductance of L11, first remove bottom cover of "Magic Brain" and then set receiver dial pointer to 28,500 kc. To decrease inductance, move the grounded ends (straps) of L11 and L12 (see figure 4) nearer chassis. Do not allow straps to touch chassis except where connected. To increase inductance, move the straps farther away from chassis. Adjust position of straps until maximum (peak) output results. The alignment of the detector tuned circuit should next be checked at 28,500 kc without changing either the receiver or test oscillator adjustments. An increase of output when the brass end of a tuning wand is brought near L22 indicates that L22 is too high in inductance, while an increase when the iron end is brought near the coil indicates that the inductance is too low. The inductance of L22 may be varied by changing the spacing between the grounded end (strap) of L22 and the strap connected from C41 to contact on S2 (figure 4). An increase of spacing will increase the inductance, while a decrease of spacing will decrease the inductance. Adjust the spacing until maximum (peak) output results. Replace "Magic Brain" bottom cover and repeat adjustments in (b) prior to those of "Short wave" band.

"Short Wave" Band

(d) Set the receiver range selector to its "Short wave" position and its dial pointer to 20,000 kc. Adjust the test oscillator to 20,000 kc. If the vertical input cathode-ray connections were changed for adjustment (b) above, they should be restored to their original position as shown on figure 3. Adjust oscillator air-trimmer C13 until maximum (peak) output is reached. Two peaks may be found with this circuit. The peak with minimum capacitance (plunger near out) should be used. Tighten lock nut. Adjust detector air-trimmer C35 until maximum (peak) output is reached, while slightly rocking the gang tuning condenser back and forth through the cust. The peak with maximum capacitance (plunger near in) should be used. Tighten lock nut. Adjust antenna air-trimmer C3 until maximum (peak) output is reached while slightly rocking the gang tuning condenser back and forth through the signal. Two peaks may be found with this circuit. The peak with maximum capacitance (plunger near in) should be used. Tighten lock nut. Check the image frequency by changing the receiver dial setting to 19,000 kc. The image signal should be received at this position indicating that the adjustment of C13 has been correctly made. No adjustments should be made while checking for the image signal.

"Medium Wave" Band

(e) Place receiver range selector to its "Medium wave" position with its dial pointer set to 6,000 kc. Tune the test oscillator to 6,000 kc. Adjust oscillator air-trimmer C14 to produce maximum (peak) output as shown by the waves on the oscillograph. Two peaks may be found with this circuit. The peak with minimum capacitance (plunger near out) should be used. Tighten lock nut. Adjust the detector air-trimmer C36 for maximum (peak) output while slightly rocking the gang tuning condenser back and forth through the signal. Two peaks may be found with this circuit. The peak with maximum capacitance (plunger near in) should be used. Tighten lock nut. Adjust antenna air-trimmer C4 to produce maximum (peak) output. Tighten lock nut.

"Standard Broadcast" Band

(f) Remove the 300-ohm resistor from between the test-oscillator "Ant." post and receiver antenna terminal "A1" and insert a 200-mmfd. capacitor in its place. Place receiver range selector to "Standard broadcast" position with receiver dial pointer set to 600 kc. Tune the test oscillator to 600 kc. Adjust oscillator magnetite core screw L8 (top of large oscillator coil can) for maximum (peak) output as shown by the waves on the oscillograph screen.

(g) Set receiver dial pointer to 1,300 kc. Tune test oscillator to 1,500 kc (1,500—3,100-kc range) and increase its output to produce a registration on the oscillograph screen. Carefully adjust the oscillator, detector, and antenna air-trimmers C16, C37, and C5, respectively, to produce maximum (peak) output as shown by the waves on the oscillograph screen. Shift the oscillograph "Timing" switch to "Ext." Place the frequency modulator sweep-range switch to its "Lo" position and insert plug of the frequency-modulator cable in test-oscillator jack. Turn test-oscillator modulation switch to "Off." Re-tune the test oscillator (increase frequency) until the forward and reverse waves show on the oscillograph screen and become coincident at their highest points. This will occur at a test-oscillator setting of approximately 1,680 kc. Adjust trimmers C16, C37, and C5 again, setting each to the point which produces the best coincidence and maximum amplitude of the images.

(h) Remove the plug of the frequency-modulator cable from the test-oscillator jack. Turn test-oscillator modulation switch to "On." Set oscillograph "Timing" switch to "Int." Tune test oscillator to 200 kc (200-400-kc range). Tune receiver for maximum response to this signal at a dial reading of approximately 600 kc. The third harmonic of the 200-kc signal is used for this adjustment. Shift oscillograph "Timing" switch to "Ext." Insert the plug of the frequency modulator cable in test-oscillator jack. Turn test-oscillator modulation switch to "Off." Re-tune the test oscillator (increased frequency) until the forward and reverse waves show on the oscillograph screen. This will occur at a test-oscillator setting of approximately 230 kc. Disregarding the fact that the two images may or may not come together, adjust the oscillator magnetite core screw L9 (top of large oscillator coil can) to produce maximum (peak) amplitude of the images. Shift the oscillograph "Timing" switch to "Int." Remove the plug of the frequency-modulator cable from the test-oscillator jack. Turn the test-oscillator modulation switch to "On." Repeat adjustments in (g) above to compensate for any changes caused by the adjustment of L9 core, tightening lock nuts on C16, C37, and C5, respectively, after each is adjusted.

"Long Wave" Band

(i) Shift the oscillograph "Timing" switch to "Int." Remove the plug of the frequency-modulator cable from the test-oscillator jack. Turn the test-oscillator modulation switch to "On." Place receiver range selector to its "Long wave" position. Set the receiver dial pointer to 175 kc. Tune the test oscillator to 175 kc and increase its output until a deflection is noticeable on the oscillograph screen. Adjust oscillator magnetite core screw L10 (located on top of small oscillator coil can) so that maximum (peak) amplitude of output is shown on the oscillograph screen.

(j) Set receiver dial pointer to 350 kc. Tune test oscillator to 350 kc. Adjust the oscillator, detector, and antenna air-trimmers C18, C38, and C6 to produce maximum (peak) output as shown by the waves on the oscillograph screen. Without disturbing the connections, shift the oscillograph "Timing" switch to "Ext." Place the frequency-modulator sweep-range switch to its "Hi" position and insert plug of frequency-modulator cable in test-oscillator jack. Turn test-oscillator modulation switch to "Off." Re-tune the test oscillator (decrease frequency) until the forward and reverse waves show on the oscillograph screen and become coincident at their highest points. This will occur at a test-oscillator setting of approximately 190 kc. This setting places the test-oscillator frequency to 175 kc. The second harmonic is now used for the 350 kc adjustment. Adjust air-trimmers C18, C38, and C6, again, to produce maximum amplitude of the images and best coincident throughout their lengths.

(k) Re-tune the receiver to approximately 175 kc so that the forward and reverse waves appear on the oscillograph screen. Adjust the oscillator magnetite core screw L10 to produce maximum (peak) amplitude of the waves, disregarding the fact that the two images may or may not come together.

(l) Shift the receiver dial setting to 530 kc without altering any other adjustments (frequency modulator still in operation). Adjust air-trimmers C18, C38, and C6, respectively, to produce maximum amplitude and best coincidence of the waves. These adjustments compensate for any changes caused by the adjustment of the magnetite core screw L10. Tighten lock nuts on C18, C38, and C6, respectively, after each is adjusted.

Loudspeaker

Centering of the loudspeaker voice coil is made in the usual manner with three narrow paper feelers after first removing the front paper dust cover. This may be removed by softening its cement with a very light application of acetone using care not to allow the acetone to flow down into the air gap. The dust cover may be cemented back in place with ambroid upon completion of adjustment.

Phonograph Terminal Board

A terminal board is provided for connecting a phonograph into the audio amplifying circuit. Typical methods of connecting a low-impedance pickup, or the RCA Victor Models R-93, R-93-2, and R-93-S Record Players are shown on the Schematic Diagram (figure 2).

Stock No.	Description	List Price
	RECEIVER ASSEMBLIES	
12863	Board—Phonograph input terminal board	90.25
4427	Bracket—Volume control mounting bracket	.18
12987	Bracket—Band changer switch bracket	.15
12995	Cable—Tuning lamp cable and socket	1.70
12991	Cable—3-conductor shielded fidelity control cable, approximately 7½ inches long	.50
12511	Cap—Grid contact cap—Package of 5	.15
11948	Capacitor—11 Mmfd. (C42)	.30
12629	Capacitor—56 Mmfd. (C60)	.20
12404	Capacitor—120 Mmfd. (C56, C59)	.36
12714	Capacitor—220 Mmfd. (C67)	.28
13023	Capacitor—390 Mmfd. (C45, C47, C51, C53)	.35
5148	Capacitor—.007 Mfd. (C69)	.20
4838	Capacitor—.01 Mfd. (C46, C48, C50, C54, C55, C58, C68)	.25
4624	Capacitor—.01 Mfd. (C59)	.54
11315	Capacitor—.015 Mfd. (C71)	.30
4886	Capacitor—.05 Mfd. (C70)	.30
4836	Capacitor—.05 Mfd. (C41)	.30
4841	Capacitor—0.1 Mfd (C53)	.32
5170	Capacitor—0.25 Mfd. (C49)	.25
4840	Capacitor—0.25 Mfd. (C62)	.30
13741	Capacitor—0.5 Mfd. (C74)	.30
5212	Capacitor—.18 Mfd. (C18)	1.16
12872	Capacitor—.30 Mfd.—Used in 60-cycle model only (C76)	.90
12467	Capacitor—.30 Mfd. (C73, C75)	1.40
12871	Capacitor Pack—Comprising one .30-Mfd. and one 1-Mfd. capacitor, 25-cycle model only (C76, C77)	1.20
12978	Compensator Pack—Comprising one .015-Mfd., one .035-Mfd., and one 0.1-Mfd. capacitor and one 1,900-ohm, one 8,200-ohm and one 27,000-ohm resistor (C64, C65, C66, R23, R24, R26)	1.35
12606	Core—Core and stud assembly for intermediate frequency transformer	.22
12666	Foot—Chassis foot assembly—Package of 5	.75
5226	Lamp—Pilot lamp—Package of 5	.70
12648	Link—Link mechanism on band indicator operating arm	.45
12871	Reactor—Filter reactor (L31)	1.50
9669	Screw—Set screw for flexible coupling or gear, Stock Nos. 12905 and 12906—Package of 10	.25
12901	Shaft—Detector drive shaft and pinion gear for planetary drive	.75
12900	Shaft—Vernier drive shaft for planetary drive	.25
12903	Spring—Tension spring for planetary drive bearing—Package of 10	.30
12907	Spring—Tension spring for gear, Stock No. 12906—Package of 10	.20
8053	Spring—Tension spring for link, Stock No. 8051—Package of 5	.32
	REPRODUCER ASSEMBLIES	
12914	Board—Reproducer terminal board	.25
12640	Bracket—Output transformer mounting bracket and clamp	.18
12912	Coil—Reproducer field coil (L35)	1.70
13290	Cone—Reproducer cone and dust cap (L31) (Model 10T)	1.85
13291	Cone—Reproducer cone and dust cap (L31) (Model 10K)	2.55
5118	Connector—3-contact male connector for speaker leads	.25
9737	Reproducer, complete (Model 10T)	8.70
11222	Socket—Upper right or lower left hand dial lamp socket	.18
11381	Socket—Tuning lamp socket and cover	.45
11196	Socket—Voltage supply or 6F5 Radiotron socket	.15
12607	Spring—Retaining spring for core in I.F. transformer—Package of 10	.16
12986	Stud—Band indicator operating arm stud—Package of 5	.65
12660	Switch—Low frequency tone and power switch (S4, S6)	1.30
12988	Switch—Band changeover switch (S1, S2, S3)	.65
12979	Tone Control—High frequency tone and fidelity control (R39, S5)	1.60
12981	Transformer—First intermediate frequency transformer (L24, L25, L26, C45, C47)	2.15
12990	Transformer—Second intermediate frequency transformer (L27, L28, C51, C53)	1.85
12982	Transformer—Third intermediate frequency transformer (L29, L30, C56, C57, C60, R17, R19)	2.25
12856	Transformer—Power transformer, 105-125 volts, 50/60 cycles (T1)	5.35
12857	Transformer—Power transformer, 105-125 volts, 25/60 cycles	9.10
12858	Transformer—Power transformer, 110-125-150-210-240 volts, 40/60 cycles	8.75
12861	Volume Control (R22)	1.00
	MAGIC BRAIN UNIT ASSEMBLIES	
12806	Board—3-contact antenna and ground terminal board	.25
5237	Bushing—Variable condenser mounting bushing assembly—Package of 5	.45
12686	Cable—Shielded power cable, approximately 4 inches long, complete with 8-contact male plug	1.50
12511	Cap—Grid contact cap—Package of 5	.15
13714	Capacitor—Adjustable trimmer capacitor (C2, C4, C5, C8, C14, C16)	.30
12884	Capacitor—Adjustable trimmer capacitor (C10, C18, C13, C38, C39)	.40
13807	Capacitor—Adjustable trimmer capacitor (C13, C35, C36, C37)	.35
12896	Capacitor—15 Mmfd. (C24)	.20
12721	Capacitor—18 Mmfd. (C12)	.20
12891	Capacitor—36 Mmfd. (C31)	.20
12629	Capacitor—56 Mmfd. (C44)	.20
12895	Capacitor—56 Mmfd. (C17)	.20
12723	Capacitor—56 Mmfd. (C1, C44)	.25
13307	Capacitor—63 Mmfd. (C11)	.20
12724	Capacitor—120 Mmfd. (C25, C28, C29)	.28
12725	Capacitor—150 Mmfd. (C21)	.28
12894	Capacitor—180 Mmfd. (C22)	.28
12727	Capacitor—555 Mmfd. (C23)	.30
12559	Capacitor—560 Mmfd. (C7, C26, C33, C42)	.20
12890	Capacitor—1,500 Mmfd. (C12)	.20
12729	Capacitor—1,550 Mmfd. (C20)	.36
12728	Capacitor—4,500 Mmfd. (C19)	.36
12897	Capacitor—4,700 Mmfd. (C43)	.40
4848	Capacitor—01 Mfd (C3, C30, C31, C32)	.25
12879	Coil—Antenna coil and shield, XABC bands (L2, L3, L4, L5, L6)	1.90
12888	Coil—Antenna coil, "D" band (L13, L14)	.60
12880	Coil—Detector coil and shield, XABC bands (L15, L16, L17, L18, L19, L20)	2.05
12980	Resistor—Voltage divider resistor—Comprising one 250-ohm, one 17-ohm, one 11-ohm and one 38-ohm sections (R31, R32, R33, R35)	.35
12311	Resistor—1,000 ohms—insulated, ½ watt (R11, R16)—Package of 5	1.00
11955	Resistor—1,000 ohms—carbon type, 1/10 watt (R14)—Package of 5	.75
13097	Resistor—10,000 ohms—insulated, 1 watt (R30)	.22
12870	Resistor—10,000 ohms—wire wound (R10)	.35
12864	Resistor—17,000 ohms—wire wound resistor (R34)	.70
11383	Resistor—56,000 ohms—carbon type, 1/10 watt (R17)—Package of 5	.75
12875	Resistor—56,000 ohms—carbon type, 1 watt (R13)—Package of 5	1.10
11365	Resistor—85,000 ohms—carbon type, ½ watt (R15)—Package of 5	1.00
8064	Resistor—85,000 ohms—carbon type, ½ watt (R37)—Package of 5	1.00
11281	Resistor—100,000 ohms—carbon type, 1/10 watt (R12)—Package of 5	.75
11398	Resistor—230,000 ohms—carbon type, 1/10 watt (R19)—Package of 5	.75
13323	Resistor—370,000 ohms—carbon type, ½ watt (R27)—Package of 5	1.00
11372	Resistor—470,000 ohms—carbon type, ½ watt (R25, R28)—Package of 5	1.00
13013	Resistor—1.0 megohm—carbon type, 1/10 watt—Located in tuning tube socket (R11)—Package of 5	.75
11626	Resistor—2.2 megohm—carbon type, ½ watt (R18)—Package of 5	1.00
12874	Resistor—3.3 megohm—carbon type, ½ watt (R20, R21)—Package of 5	1.00
12870	Scale—Vernier dial scale	.65
13008	Shield—Intermediate frequency transformer shield	.28
12607	Shield—1st or 2nd I.F. transformer shield	.30
12581	Shield—3rd I.F. transformer shield top	.36
11191	Socket—3-contact 5Z4 Radiotron socket	.15
11198	Socket—7-contact 6K7, 6L6 or 6H6 Radiotron socket	.15
13095	Socket—Upper left or lower right hand dial lamp socket	.23
9738	Reproducer, complete (Model 10K)	9.40
13289	Transformer—Output transformer (T2)	2.90
11886	Washer—Spring washer to hold field coil securely—Package of 5	.20
	MISCELLANEOUS ASSEMBLIES	
11906	Bracket—Tuning lamp bracket and clamp	.22
12915	Escutcheon—Station selector escutcheon and crystal	1.30
13742	Escutcheon—Tuning lamp escutcheon	.22
12699	Knob—Large station selector knob—Package of 5	.68
12700	Knob—Small (vernier) station selector knob—Package of 5	.50
11347	Knob—Master-speech and power switch—volume control—range selector or fidelity control knob—Package of 5	.75
11377	Screw—Chassis mounting screw assembly—Package of 4 (Model 10T)	.32
11310	Screw—Chassis mounting screw assembly—Package of 4 (Model 10K)	.28
12914	Shield—Complete rf unit top shield	.90
4982	Spring—Holding spring for station selector or volume control knob, Stock No. 12699—Package of 10	.30
11349	Spring—Retaining spring for knob, Stock Nos. 12700 and 11347—Package of 5	.35
12709	Cord—Oscillator coil and shield, ABC bands (L7, L8, L9)	2.05
12681	Coil—Oscillator coil and shield, X band only (L10)	.80
13890	Coil—Oscillator coil, "D" band (L11, L12, L23)	.70
12688	Coil—R.F. coil, "D" band (L21, L22)	.67
12877	Condenser—3 gang variable tuning condenser (C9, C27, C41)	5.30
12687	Connector—8-contact male connector and cover for power cable, Stock No. 12886	.40
13664	Core—Adjustable core and stud for Stock No. 13654	.32
12800	Core—Adjustable core and stud for Stock No. 12909	.20
12882	Core—Adjustable core and stud for Stock No. 12881	.20
11314	Resistor—560 ohms—carbon type, ½ watt (R3)—Package of 5	1.00
5132	Resistor—1,000 ohms—carbon type, ½ watt (R8)—Package of 5	1.00
11298	Resistor—5,600 ohms—carbon type, 1 watt (R6)	.22
3998	Resistor—15,000 ohms—carbon type, ½ watt (R5)—Package of 5	1.00
11282	Resistor—56,000 ohms—carbon type, 1/10 watt (R4, R9)—Package of 5	.75
8064	Resistor—82,000 ohms—carbon type, ½ watt (R2)—Package of 5	1.00
11397	Resistor—360,000 ohms—carbon type, 1/10 watt (R1, R7)—Package of 5	.75
13651	Shield—Coil shield for Stock Nos. 13879, 13880	.22
12710	Shield—Coil shield for Stock No. 12709	.38
12881	Shield—Coil shield for Stock No. 12881	.20
11198	Socket—7-contact 6K7 Radiotron socket	.15
11379	Socket—7-contact 6L7 Radiotron socket	.30
12885	Socket—8-contact 6J7 Radiotron socket	.20
12007	Spring—Retaining spring for core, Stock Nos. 12664, 12800, 12882—Package of 10	.36
12878	Switch—Range switch and mounting nut (S1, S2, S3)	3.60
13654	Trap—Wave-trap, complete (L1)	.75
	DRIVE ASSEMBLIES	
10705	Ball—5/32-inch diameter steel ball for planetary drive—Package of 10	.25
10941	Ball—¼-inch diameter steel ball for planetary drive bearing—Package of 20	.25
12904	Bushing—Plate and bushing assembly for planetary drive mounting	.20
12903	Coupling—Flexible coupling and shaft assembly, complete	.30
12909	Dial—Band indicating dial and cam assembly	1.05
12899	Drive—Variable tuning condenser drive, complete, including mounting bracket drive, dial scale and indicator, fine vernier dial, Stock No. 12870 and link, Stock No. 13868	4.40
12906	Gear—Ann-bush drive gear, complete	.75
12910	Gear—Sector gear and link assembly for band selector	.28
12908	Indicator—Station selector indicator pointer	.28
8051	Link—Link and roller assembly, complete with spring	.30
12911	Screen—Dial lamp screen and light diffuser	.20

©John F. Rider, Publisher

MODEL D11-2

RCA MFG. CO., INC.

Schematic

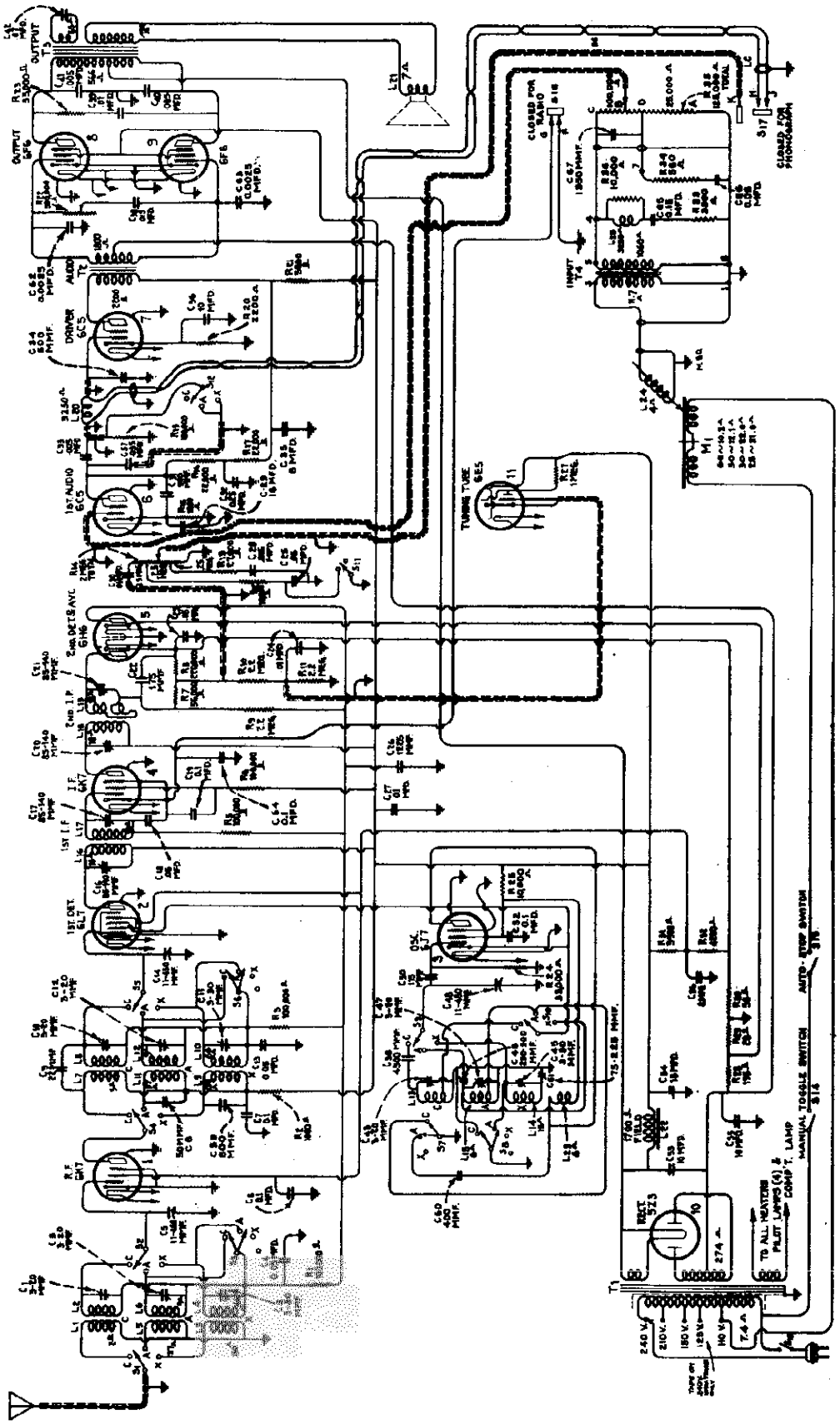

On some models C 24 is .05 M.F.D.

Alignment Frequencies

Band X	150 kc. (osc.),	400 kc. (osc., ant., det.)
Band A	600 kc. (osc.),	1,720 kc. (osc., ant., det.)
Band C	18,000 kc. (osc.,	ant., det.)

Intermediate Frequency ..... 460 kc.

Frequency Ranges

Band X	140 kc.—	410 kc.
Band A	540 kc.—	1,800 kc.
Band C	5,700 kc.—	18,000 kc.

©John F. Rider, Publisher

MODEL D11-2
Chassis Wiring

RCA MFG. CO., INC.

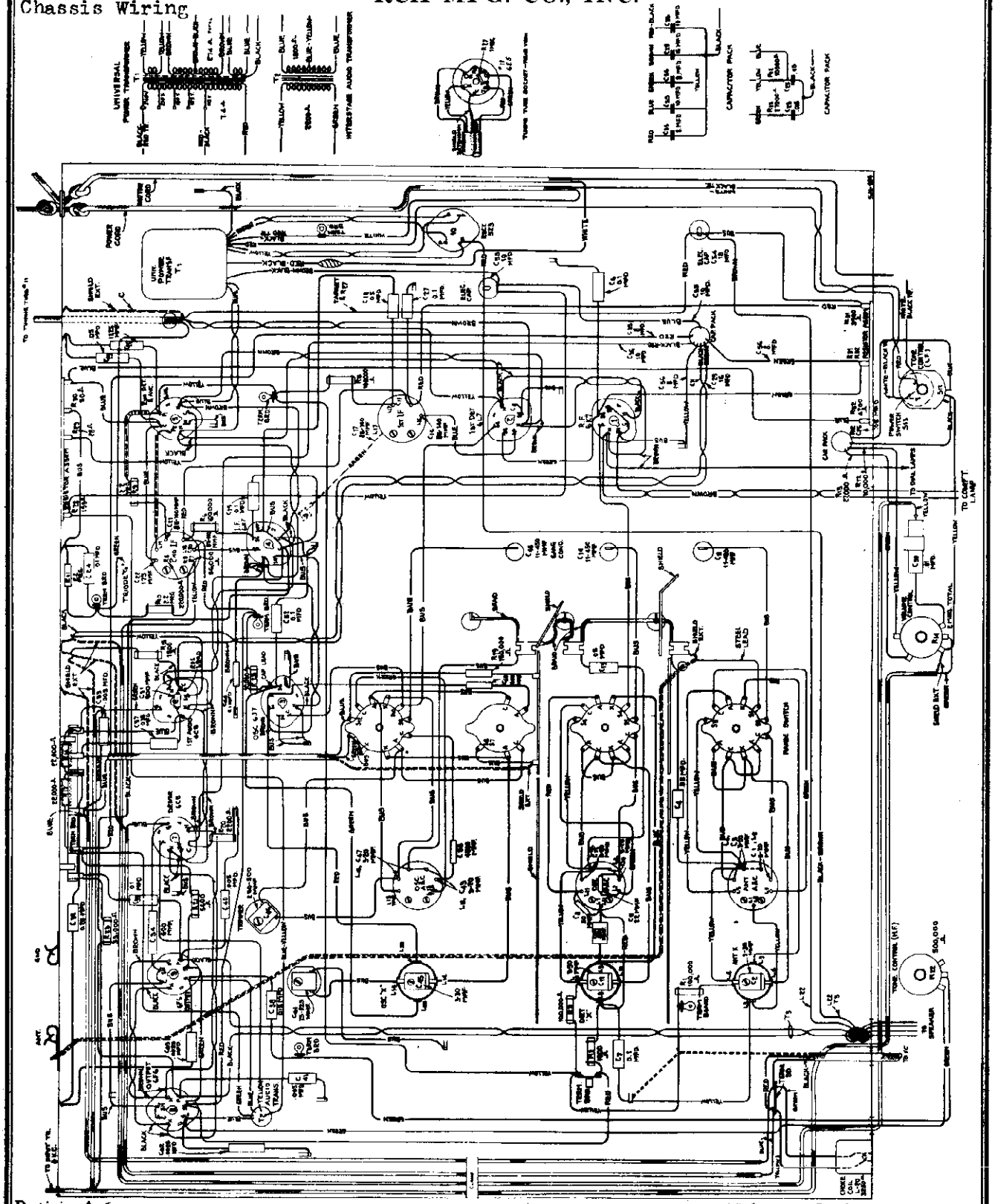

Power Supply Ratings

Rating A-6	105-125 Volts, 60 Cycles, 170 Watts
Rating A-5	105-125 Volts, 50 Cycles, 165 Watts
Rating B-4	105-125 Volts, 40 Cycles, 170 Watts
Rating B-3	105-125 Volts, 30 Cycles, 160 Watts
Rating B-2	105-125 Volts, 25 Cycles, 165 Watts
Rating C-6	105-130/140-160/200-250 Volts, 60 Cycles, 175 Watts
Rating C-5	105-130/140-160/200-250 Volts, 50 Cycles, 170 Watts

©John F. Rider, Publisher

RCA MFG. CO., INC.

MODEL D11-2
Voltage, Socket
Trimmers, Pickup
Transformer, Speaker
Dial Mechanism

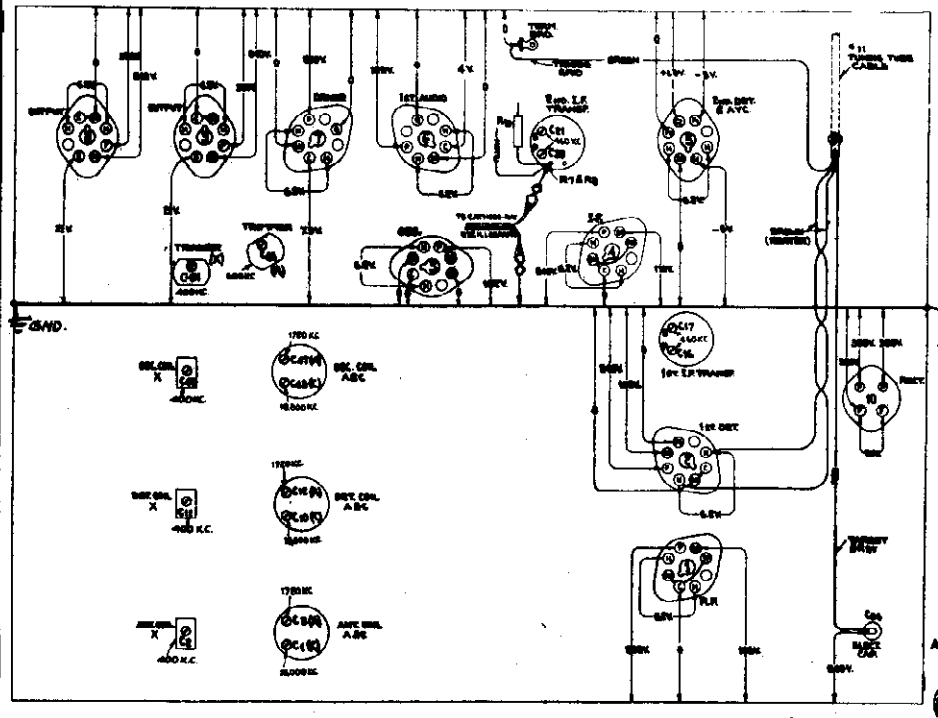

Figure 5—Radiotron Socket Voltages

Measured at 115 volts, 60 cycle supply—No signal being received

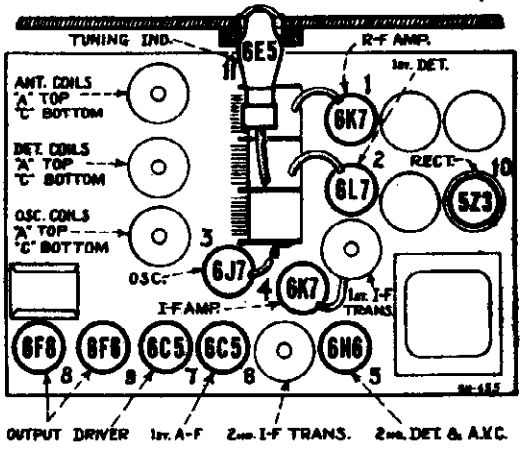

Figure 1—Radiotron and Coil Locations

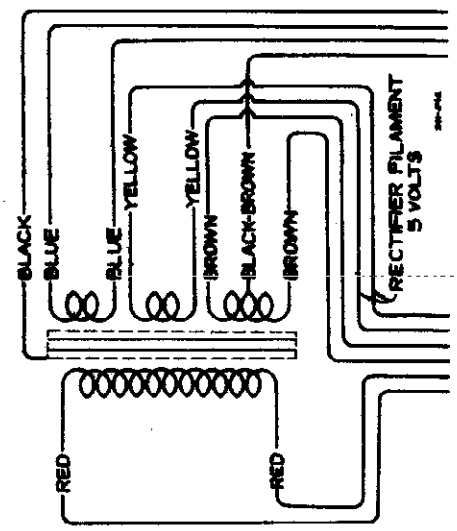

Figure 7—Standard Power Transformer Connections

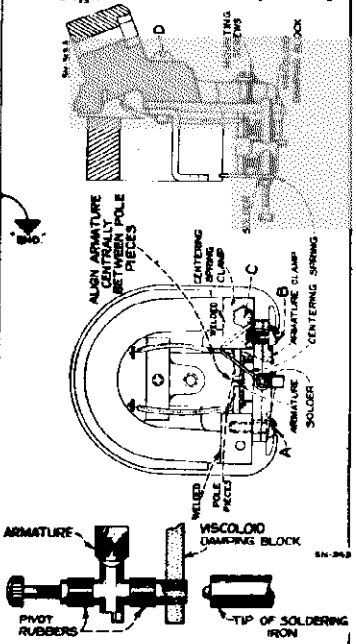

Figure 12—Special Soldering-Iron Tip

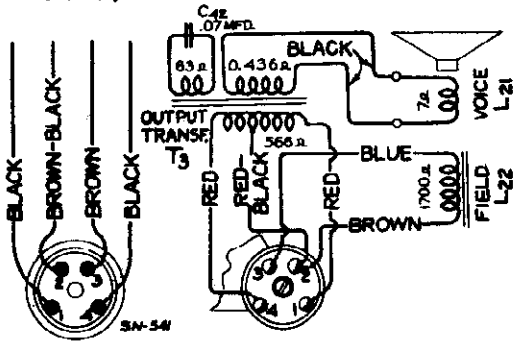

Figure 6—Loudspeaker Wiring

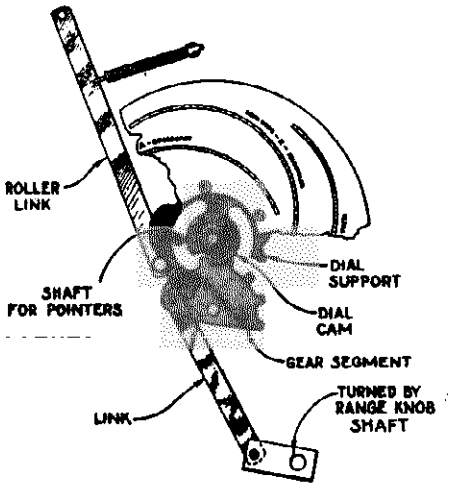

Figure 10—Selector Dial Change Mechanism

For Fig. 5 Alignment Apparatus Connections see 9T & 9X2 Fig. 4

© John F. Rider, Publisher

MODEL D11-2
Assembly Wiring
Recorder Changer

RCA MFG. CO., INC.

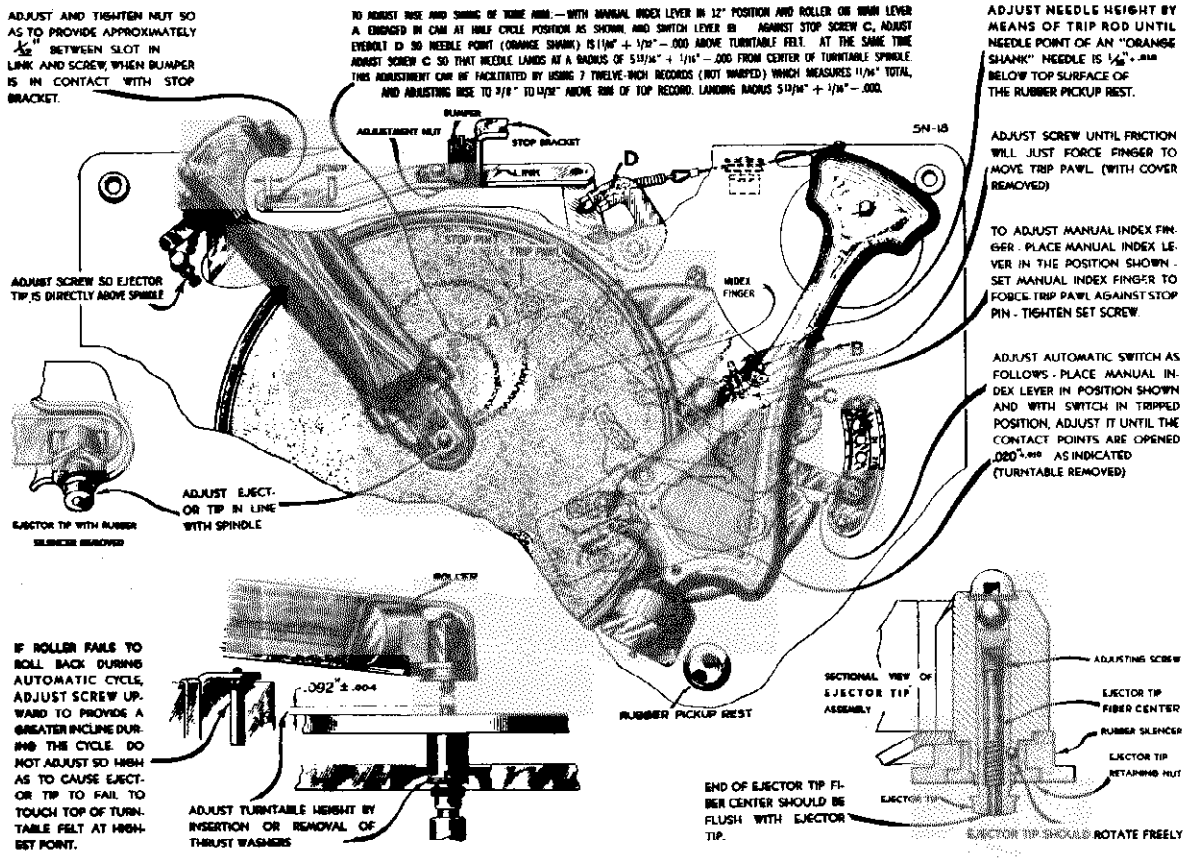

Figure 9—Automatic Record Changer Adjustments.

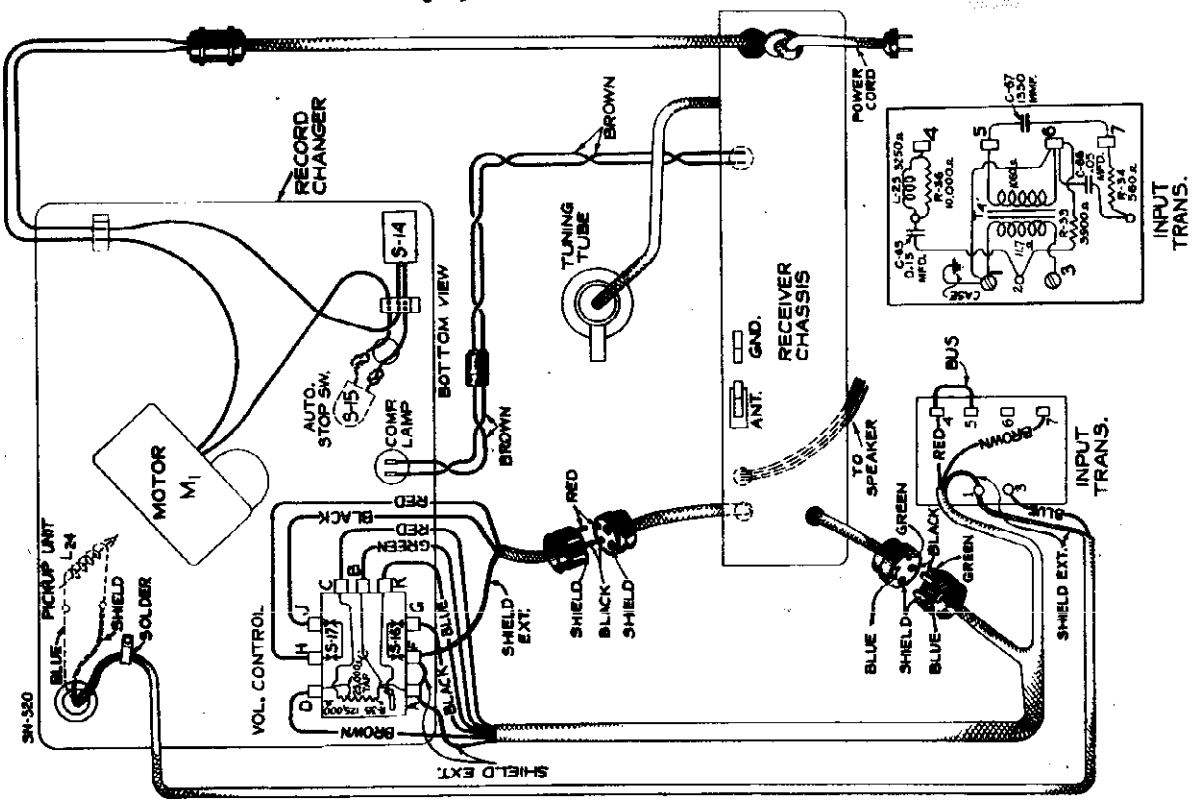

Figure 8—Assembly Wiring

©John F. Rider, Publisher

RCA MFG. CO., INC.

MODEL D11-2
Circuit Data
Notes

RADIOTRON COMPLEMENT

(1) RCA-6K7.....Radio-Frequency Amplifier
(2) RCA-6L7.....First Detector
(3) RCA-6J7.....Heterodyne Oscillator
(4) RCA-6K7.....Intermediate Amplifier
(5) RCA-6H6.....Second Detector and A.V.C.
(6) RCA-6C5.....First Audio Amplifier
(7) RCA-6C5.....Audio Driver Amplifier
(8) RCA-6F6.....Power Output Amplifier
(9) RCA-6F6.....Power Output Amplifier
(10) RCA-5Z3.....Full-Wave Rectifier
(11) RCA-6E5.....Tuning Indicator

PHONOGRAPH

Type.....Automatic Record Ejector
Record Capacity.....Seven 10-inch or Six 12-inch
Turntable Speed.....78 R.P.M.
Type of Pickup..Improved Low-Impedance Magnetic
Pickup Impedance.....12 Ohms at 1,000 Cycles

POWER OUTPUT RATINGS

Undistorted.....8.5 Watts
Maximum.....11.5 Watts

LOUDSPEAKER

Type.....12-inch Electrodynamic
Voice Coil Impedance.....7.5 Ohms at 400 Cycles
Field Coil Rating.....1,700 Ohms—72 M.A.

Mechanical Specifications

Height	43 inches
Width	30⅝ inches
Depth	18½ inches
Weight (Net)	155 pounds
Weight (Shipping)	229 pounds
Chassis Base Dimensions	15½ inches x 10½ inches x 3½ inches

General Description

The RCA Victor Model D 11-2 combination radio receiver and automatic phonograph provides excellent entertainment from either broadcast reception or record reproduction. It consists of an eleven-tube, three-band radio receiver, and an automatic phonograph, combined in the one cabinet. The high level of sound energy obtainable from the output of this instrument is capably handled by a new Super-Sensitive, twelve-inch, electrodynamic loudspeaker. Outstanding features of this instrument are as follows:

Magic Brain

The radio receiver includes the "Magic Brain" unit for maximum all-around efficiency. This unit is a scientifically correct co-ordination of all the parts for the r-f, oscillator, and first detector functions of a Superheterodyne Receiver. Such design of the important head end, or "Magic Brain" unit, gives greater efficiency in the short-wave ranges as all lead lengths are kept as short as possible, and all sockets and other parts are located for best possible operation.

Magic Eye

A cathode-ray tube whose fluorescent screen has the appearance of a human eye, is used for visually indicating when the receiver is accurately tuned to the incoming signal. This tube is of new design. It contains two groups of elements; one group operates as an amplifier and the other group operates as a cathode-ray tube.

The cathode-ray section consists of a conically shaped luminescent screen, a cathode, and a control electrode. The detected signal from the receiver is applied through the amplifier section of the tuning eye to the control electrode of the cathode-ray section stream emitted by the cathode in such a manner as to cause a triangular shadow on the luminescent screen. The size of the shadow caused by the control electrode is determined by the strength of the incoming signal, so that a change-of-tuning is readily exhibited on the cathode-ray screen, and therefore, tuning to exact resonance can be definitely obtained.

RCA All-Metal Tubes

The new metal tubes are used in the radio receiver for amplifying and detecting purposes. These tubes make possible a greater range of stable amplification not previously attainable with corresponding glass types. Their metal envelopes form a perfect electrostatic and electromagnetic shield, precluding the former necessity for elaborate shielding by means of cans. The metal tubes are especially adaptable to the modern, extended-range receivers because of their efficient shielding and their favorable internal characteristics.

Automatic Record Changer

An improved automatic mechanism is used in this model. It is of the record ejector type, having a record capacity of seven for the ten-inch type, and a capacity of six for the twelve-inch type. The turntable speed is fixed at 78 r.p.m. by the design of the drive motor and the intermediate gear mechanism. *This speed is irreversible and does not vary as long as the supply line frequency remains constant.* The instrument may be purchased with any one of seven ratings as specified under Electrical Specifications. *It is very important that a machine of any particular rating be operated at the frequency for which it is designed and rated.* Attempts to operate at other frequencies will result in improper reproduction from the phonograph system. The ejecting mechanism is arranged so that it will trip on various types of records. This is obtained by having a trip mechanism which is actuated by the size of needle acceleration toward the center of the record.

Selector Dial

The dial drive and station indicator system are of unique design. There are three individual dial scales, each with full 180 degree band spread, one for use on each of the three tuning bands. These scales are economically arranged on a rotary disc which operates in conjunction with the range selector switch, so that as the switch is shifted to a particular band, the corresponding dial scale rotates into position, leaving the remaining scales concealed. The driving mechanism for the dial pointer and the variable gang condenser has tuning ratios of 104-to-1 and 70-to-1. Control may be interchanged between these two ratios by a push-pull operation of a positive-action clutch which is actuated by the tuning control knob. A vernier dial with an auxiliary pointer (band-spreader) is provided for the accurate tuning required for short-wave reception. The vernier pointer is geared to the main dial-shaft through a mechanism which causes it to rotate ten times to a 180 degree rotation of the main dial-pointer. The dial-drive mechanism connects to the variable gang condenser by means of a flexible coupling. This coupling arrangement together with the new shock-proof condenser mounting makes possible the rigid attachment of the drive mechanism to the receiver-chassis base without causing serious microphonic coupling between the base and the tuning condenser.

CIRCUIT ARRANGEMENT

The Superheterodyne principle of operation forms the basis of the circuit design. A single, tuned r-f stage is used ahead of the first detector. The functions of oscillator and detector are performed by two separate tubes. One r-f stage is employed and designed to operate at 460 kc. The combined second detector and a.v.c. stage uses an RCA-6H6 double diode. The audio system consists of two single amplifier stages working in cascade with a push-pull power output stage. The loudspeaker is an electrodynamic type, receiving its field supply from the rectifier and filter system and simultaneously acting as a filter reactor. Full wave rectification is performed in the RCA-5Z3 tube. The outstanding features of electrical design are concerned with the following:

Tuned Circuits

A total of seven circuits are tuned to provide gain and selectivity to the incoming signal. The variable gang condenser resonates the antenna transformer secondary, the detector transformer secondary and the oscillator coil. Alignment trimmers are included for each of these same circuits. Additional trimmers are used on the r-f transformers, tuning both the secondaries and primaries to 460 kc. There are separate groups of antenna, detector and oscillator coils for each of the tuning ranges. They are placed into operation by means of a rugged rotary switch.

First Detector

This stage has unusually good high frequency mixing efficiency. The tube used, an RCA-6L7, is a new hexode type. The signal is supplied to the first control grid and the oscillator is fed in on a second control grid, a screen grid separating the two. The arrangement of the grids prevents degenerative difficulties, particularly at the higher frequencies. The second grid is direct-connected to the cathode of the oscillator tube and has no d-c bias.

Oscillator

The oscillator circuit is worthy of careful study inasmuch as it is different from the type ordinarily employed. It has self-stabilizing properties which are very advantageous for short wave operation. The generated frequency remains substantially constant, the circuit being unaffected by variation of line voltage and other similar influences. Output also remains uniform over the individual tuning ranges. The switching of the tuning coils is arranged so as to short those not in use in order to prevent absorption or any reactive effects in the particular band being tuned.

Detector and A.V.C.

The modulated signal as obtained from the output of the i-f system is detected by an RCA-6H6 double diode tube. The audio frequency secured by this process is passed on to the r-f system for amplification and final reproduction. The d-c voltage which results from detection of the signal, is used for automatic volume control. This voltage, which develops across resistors R-7 and R-8, is applied as automatic control grid bias to the r-f, first detector and i-f tubes through suitable resistance-capacitance filter circuits. The second diode of the RCA-6H6 is used to supply residual bias for these controlled tubes under conditions of little or no signal. This diode, under such conditions, draws current, which flows through resistors R-7, R-8 and R-9, thereby maintaining the desired minimum operating bias on such tubes. On application of signal energy above a certain level, however, the auxiliary bias diode ceases to draw current and the a.v.c. diode takes over the biasing function. The cathode and anode of the signal-a.v.c. diode have positive potential in respect to chassis-ground and cathodes of the a.v.c. controlled tubes when no signal is being received.

Audio System

Manual volume control of the detected signal is effected by an acoustically tapered potentiometer in the grid circuit of the first a-f stage. This control has tone compensating filters connected to two points thereon. These filters effect the correct aural balance at different volume settings. A music-speech switch (low frequency tone control) is associated with one of the compensation filters. The purpose of this control is to make speech reproduction more intelligible and to reduce hum obtained from stray modulation on a carrier. The driver stage of the audio system uses an RCA-6C5 which is resistance coupled to the first a-f tube and transformer coupled into the push-pull power output stage.

SERVICE DATA

The various diagrams of this booklet contain such information as will be needed to isolate causes for defective operation when such develops. The ratings of the resistors, capacitors, coils, etc., are indicated adjacent to the symbols signifying these parts on the diagrams. Identification titles such as R-3, L-2, C-1, etc., are provided for reference between the illustrations and the Replacement Parts List. The coils, resistors, and transformer windings are rated in terms of their d-c resistances only. Ratings of less than one ohm are generally omitted.

Alignment Procedure

Eleven alignment trimmers are provided in the r-f, first detector and oscillator tuning system and four are used in the i-f system. All of these are accurately adjusted during manufacture and should remain in proper alignment unless affected by abnormal conditions of climate or have been altered by other means. Loss of sensitivity, improper tone quality and poor selectivity are the usual indications of improper alignment.

Correct performance of the receiver can only be obtained when the trimmer adjustments have been made by a skilled service man with the use of adequate and reliable test equipment. Such apparatus as may be required for alignment of this particular instrument is illustrated and described on a separate page of this booklet.

Two methods of alignment are applicable. One utilizes a Oshkosh-Ray Oscillograph as a means of output indication and the other follows former procedure where a glow type indicator or meter is used.

The oscillographic method is much to be preferred since greater accuracy is possible from the type of indication afforded. The use of oscillographic equipment as with the RCA Tuning Wand is an instrument designed particularly for such a purpose.

The Tuning Wand consists of a hakelite rod having a small bakelite cylinder at one end containing a coil of fine wire. The cylinder is inserted into a fixed coil which is connected to the output of the receiver. Signal of the normal resonant frequency is being supplied to such coil to obtain an indication of the tuning. Holes are provided at the top of the r-f shield core for alignment with the Wand. The presence of either end of the Wand will cause a decrease in output when either end is inserted, if the tuning is correct and will require no adjustment. However should there be an increase of output due to the iron core and decrease with the brass cylinder, an increase in inductance or capacitance is indicated as necessary to bring the circuit into line. The trimmer involved should therefore be increased accordingly. If the brass cylinder end causes an increase in output while the iron end causes a decrease, indication of reluctance will be necessary to place the circuit in alignment. This is equivalent to decreasing the inductance concerned. The following tabulation gives the various changes and the adjustments required:

WAND	SIGNAL	TRIMMER
Brass	Decrease	Mica
Iron	Decrease	
Brass	Increase	Decrease
Iron	Decrease	
Brass	Decrease	Increase
Iron	Increase	

Dial Adjustment

Figure 10 illustrates the relations of the various parts of the dial mechanism when it is in its A—Broadcast position and the range switch is likewise turned to its Band A setting. In re-assembling the dial after repairs, see that the green are marked in accordance with the diagram, at the same time noting that the lever which is attached to the range-switch shaft is in the position as shown

Radiotron Socket Voltages

The voltage values indicated from the Radiotron socket contacts to chassis on Figure 9 will serve to assist in the location of causes for faulty operation. Each value as specified should hold within ± 20% when the receiver is normally operative at its rated supply voltage. Variations in excess of this limit will usually be indicative of trouble in the basic circuits. The voltages given are actual operating values and do not allow for inaccuracies which may be caused by the loading effect of a voltmeter's internal resistance. This resistance should be duly considered for all readings. The amount of circuit resistance shunting the meter during measurement will determine the accuracy to be obtained, the error increasing as the meter resistance becomes comparable to or less than the circuit resistance. For the majority of readings, a meter having an internal resistance of 1000 ohms per volt will be satisfactory when the range used for each reading is chosen as high as possible consistent with good readability.

Automatic Record Ejector

The record changing mechanism is designed to be simple and fool-proof. Under normal operating conditions, service difficulties should be negligible. Occasionally, however, certain adjustments may be required. These adjustments are illustrated and explained in Figure 9.

It is important when servicing the automatic mechanism, to have it placed on a level support. It is also important to refrain from forcing the mechanism if there is a tendency to bind or jam, since bent levers and possibly broken parts may result.

The tip of the record ejector is adjustable in relation to the turntable spindle, the two being easily coaxial when properly adjusted. To align the tip, remove the rubber silencer of the ejector assembly, loosen ejector tip retaining nut and slide the tip assembly to the position where it is in rectilinear with the axis of the turntable spindle. This adjustment may be simplified by placing several records on the turntable, depressing the spindle through the top record hole and lining up the ejector tip in the spindle hole of the record.

To insure that the ejector tip rotates freely, apply a slight amount of oil to the shank of the tip at the point where it is in contact with the ball bearing.

Magnetic Pickup

The pickup used in the phonograph unit is of an improved design, having several variations from the usual type of pickup. The magnetic assembly is one solid unit, the laminated armature is solidly welded to the pole pieces and is non-adjustable. There is a centering spring attached to the armature to maintain proper adjustment and provides a damping effect on the movement of the armature. The frequency response is uniform over a wide range.

Specifications which may be necessary on the pickup are as follows:

decrease with the brass cylinder, an increase in inductance or capacitance is indicated as necessary to bring the circuit into line. The trimmer involved should therefore be increased accordingly. If the brass cylinder end causes an increase in output while the iron end causes a decrease, indication of reluctance will be necessary to place the circuit in alignment. This is equivalent to decreasing the inductance concerned. The following tabulation gives the various changes and the adjustments required:

WAND	SIGNAL	TRIMMER
Brass	Decrease	Mica
Iron	Decrease	
Brass	Increase	Decrease
Iron	Decrease	
Brass	Decrease	Increase
Iron	Increase	

©John F. Rider, Publisher

©John F. Rider, Publisher

CATHODE-RAY ALIGNMENT

Equipment

A standard source of alignment frequencies is required. Such a source should consist of an RCA Full Range Oscillator, Stock No. 9595. Output indication should be by means of an RCA Stock No. 9541 Cathode-Ray Oscillograph. An RCA Stock No. 9558 Frequency Modulator will be needed to sweep the generated signal and synchronize it with the Oscillograph in order to obtain visual representation of the resonant characteristic of the circuit being tuned on the cathode-ray fluorescent screen.

I-F Trimmer Adjustments

The four trimmers of the two i-f transformers are located as shown by Figure 1. Each must be aligned to a basic frequency of **460 kc.** The last transformer must be aligned firstly and the first transformer aligned secondly. For such a process, it is necessary to feed the output of the Full Range Oscillator to the stages in their order of alignment, adjusting the trimmers of each transformer and observing the effect at the second detector output on the Cathode-Ray Oscillograph. The proper point of connection of the Oscillograph is with its vertical "high" input terminal attached to the juncture of R-7 and R-8, as illustrated in Figure 5, and with the "⏚" or ground terminal to the chassis. The "Ext. Sync" terminals of the Oscillograph should be connected to the Frequency Modulator as shown by Figure 4. A .001 mfd capacitor installed in series with the Oscillator "Ant." lead will prevent the voltages of the stage under alignment from becoming upset. The vertical "A" amplifier should be "On" for the ensuing adjustments and its gain control kept at maximum. For each adjustment, the Oscillator output must be regulated so that the image obtained on the Oscillograph screen will be of the minimum size convenient for accurate observation. Proceed further as follows:

(a) Place the receiver, Oscillograph and test Oscillator in operation. Set the receiver range switch to Band "A" and tune the station selector to a point where no interference will be encountered from signal pickup or from the RCA-6J7 oscillator, removing the tube if necessary. Set the Oscillograph horizontal "B" amplifier to "Tuning" and control its gain so that the luminescent spot sweeps a straight line trace completely across the screen. Place the tuning control to "Int." Adjust the intensity and focusing controls of the Oscillograph to produce the correct size and strength of spot.

(b) Attach the output of the test Oscillator between the control grid cap of the RCA-6K7 r-f tube and chassis ground as shown typically by Figure 4. Tune the Oscillator to **460 kc.** and set its modulation switch to "On." Regulate its output until the signal produces a wave pattern on the Oscillograph screen, adjusting the Oscillograph controls to give a shape which is convenient for peak indications. Cause the image to stand still on the screen by manipulation of the frequency and synchronizing controls. Then carefully tune the two trimmers C-20 and C-21 of the second i-f transformer to produce maximum amplitude (vertical deflection) of the oscillographic image. Under this condition the transformer will be sharply resonated to 460 kc.

(c) The Frequency Modulator should then be placed in operation and interconnected with the Full Range Oscillator by means of the special shielded patch cord, Figure 4 shows the proper arrangement. Set the Frequency Modulator sweep range switch to its "Lo" position and turn the Oscillator modulation switch to "Off." Change the tuning control of the Oscillograph to "Ext." and place the range switch to its No. 2 position. Then carefully shift the tuning of the Oscillator so as to increase its frequency, until two distinct and similar waves appear on the Oscillograph screen and become exactly co-incident at their highest points. This condition will be found to occur at an Oscillator setting of *approximately* **540 kc.** The curves will be identical in shape but appearing in reversed positions. Adjust the frequency control of the Oscillograph in order to cause the waves to conform with the above requirement and to make them remain motionless on the screen. This will require a setting of approximately ½ clockwise rotation of the frequency control. The trimmers C-20 and C-21 should then be re-adjusted so that the two curves move together and become exactly coincident throughout their lengths, maintaining the maximum amplitude at which this condition can be brought about.

(d) Leaving the equipment connected and adjusted as in (c), change the Oscillator output to the control grid cap of the RCA-6L7 first detector tube. Then adjust the first i-f transformer trimmers C-16 and C-17 so that the forward and reverse waves appearing on the Oscillograph coincide throughout their lengths and have maximum amplitude. The shape of the composite wave obtained from this operation is a true representation of the overall tuning characteristic of the i-f system.

R-F Trimmer Adjustments

For Bands A and X, adjustments must be made at the high and low frequency ends of the range. On Band C, alignment is required only at the high frequency end.

Locations of the various antenna, detector and oscillator coil trimmers are shown by Figure 5. The test Oscillator should be removed from connection with the i-f system and its output connected to the antenna-ground terminals of the receiver. No changes are to be made in the connections of the Oscillograph at the second detector. During the following adjustments, the Oscillator output should be regulated as often as is necessary to keep the oscillographic image as low as is practically observable. Adherence to this procedure will obviate the broadness of tuning that would result from a.v.c. action on a stronger signal. Proceed with the adjustments as follows:

Calibration

Set the receiver range switch to Band A and rotate the station selector until the tuning condenser plates are in **full mesh (maximum capacitance). Then move** the main dial pointer until it points exactly to the horizontal line at the low frequency end of the Band A scale. Correct the setting of the vernier second hand pointer to read zero.

Band A

(a) With the receiver range switch in its Band A position, tune the station selector until the dial pointer is at a reading of **1720 kc. Adjust** the test Oscillator to **1720 kc. (modulation** "On" and Frequency Modulator disconnected) and increase its output to produce a registration on the Oscillograph. Carefully align the oscillator, detector and antenna trimmers, C-47, C-12 and C-3 respectively, so that each brings about maximum amplitude of output as shown by the wave on the Oscillograph. It will be necessary to have the tuning control of the Oscillograph on "Int." for this operation. After each trimmer has been peaked, the Oscillograph tuning control should be set to "Ext." and the Frequency Modulator placed into operation with its connections to the Oscillator and Oscillograph made in accordance with Figure 4. Turn the modulation switch of the Oscillator to "Off" and retune the Oscillator (increase frequency) until the forward and reverse waves show on the Oscillograph and become coincident at their highest points. Adjust the trimmers C-47, C-12 and C-3 again, setting each to the point which produces the best coincidence and maximum amplitude of the wave images.

(b) Remove the Frequency Modulator cable from the Oscillator and shift the signal frequency to **600 kc.** Place the modulation switch to "On". Tune the receiver to pick up this signal, disregarding the dial reading at which it is best received. Then insert the Frequency Modulator plug and retune the Oscillator (modulation "Off") until the two similar forward and reverse waves appear on the screen. For this adjustment, it is advisable to shift the Oscillator to its 200-400 kc. range using the third harmonic of the generated signal in order to obtain the desired range of sweep. The oscillator series trimmer, C-46, should then be adjusted to produce maximum amplitude of the images. No rocking will be necessary on the station selector inasmuch as the signal frequency is being "wobbled" by the Frequency Modulator to produce the same effect. After completing this adjustment, the trimmer C-47 should be re-aligned as in (a) to correct for any change brought about by the adjustment of C-46.

Band X

(a) Disconnect the Frequency Modulator and tune the test Oscillator to a frequency of **400 kc.** (Modulation "On"). Place the receiver range switch in its Band X position and turn the station selector until the dial pointer reads **400 kc.** Adjust the Oscillograph tuning control to "Int." Then align each of the trimmers C-47, C-11 and C-2 to the point producing maximum output at the Oscillograph. Place the Frequency Modulator in operation and attach it to the Oscillator in the normal manner. Change the Oscillograph timing to "Ext." Increase the frequency of the Oscillator (modulation "Off") until the two waves appear and become coincident at their highest points, *approximately* at **462 kc.** They may be made to remain stationary on the screen by manipulation of the Oscillograph range switch and frequency control. Readjust the three tranmmers C-47, C-11 and C-2 to give maximum amplitude and complete coincidence of the waves.

(b) Change the test Oscillator so that it delivers a signal of **150 kc.** with the Frequency Modulator disconnected. Tune this signal on the receiver which has previously been set to Band X, disregarding the dial reading at which the signal is best received. Then interconnect the Frequency Modulator with the Oscillator and retune the latter to the point at which the two similar waves appear on the screen. Adjust trimmer C-61, for maximum amplitude of the wave images. Rocking of the tuning condenser will not be necessary as the Frequency Modulator duplicates such an operation. Repeat the alignment of C-47 as outlined in (a) to correct for any reflective error brought about by the adjustment of C-61.

Band C

(a) Turn the range switch of the receiver to its Band C position and tune the station selector until the dial pointer reads **18,000 kc. Set the** test Oscillator to the same frequency (modulation "On" and Frequency Modulator disconnected) and regulate its output to the level required for convenient observation. Adjust the trimmer C-43 to the point producing maximum output as indicated on the Oscillograph. Check for the presence of the proper "image" signal by tuning the receiver to **17,080 kc.** The **18,000 kc.** signal of the Oscillator will be received at this point if the adjustment of C-43 has been properly made by using the position of least capacitance which gives maximum receiver output. It may be necessary to increase the output of the Oscillator in order to get an indication of the "image". *No adjustments should be made during this check.*

(b) Return the receiver tuning to **18,000 kc.**, realign C-43 if necessary, and then adjust the detector and antenna trimmers, C-10 and C-1, for maximum signal output as evidenced by the oscillographic image. No further adjustments are to be made on this band.

OUTPUT INDICATOR ALIGNMENT

To align the receiver by means of an output indicator other than a Cathode-Ray Oscillograph will require the use of a standard test Oscillator, such as that recommended above, for the source of signals and means of indication for the output. The RCA Neon Output Indicator, Stock No. 4317, will be found very satisfactory for such use. It should be connected across the voice coil circuit of the loudspeaker or across the output transformer primary.

I-F Alignment

Connect the test Oscillator to the control grid cap of the r-f tube. Advance the volume control of the receiver to its full-on position. Tune the test Oscillator accurately to **460 kc.** and align the trimmers C-20 and C-21 to give maximum receiver output. Regulate the Oscillator output during this adjustment so that the output indication is as small as can be conveniently observed. After completing the adjustments of these trimmers, re-connect the Oscillator so that it will feed into the control-grid circuit of the RCA-6L7 first detector. Then tune the first i-f transformer trimmers C-16 and C-17 for maximum receiver output.

R-F Alignment

After completing the i-f adjustments, it is advisable to correct the line-up of the circuits ahead of the first detector. The test Oscillator should be connected to the antenna-ground terminals of the receiver and the manual volume control turned to its maximum position. For each adjustment, the Oscillator output should be maintained as low as possible in order to avoid broadness of tuning which would result from a.v.c. action on a stronger signal.

Band A—This band should be aligned by supplying a **1720 kc.** signal to the receiver, tuning the station selector to a dial reading of 1720 and adjusting the trimmers C-47, C-12 and C-3 to produce maximum receiver output. The Oscillator should then be shifted to **600 kc.** and the receiver tuned to resonate this signal, disregarding the reading at which it is best received. Trimmer C-46 must then be adjusted, simultaneously while rocking the station selector backward and forward through the signal until the maximum output results from the combined operations. C-47 should be rechecked to assure that its adjustment has not changed because of the trimming of C-46.

Band X—Change the range switch to its Band "X" position. Tune the receiver to read **400 kc.** and set the Oscillator to **400 kc.** Adjust trimmers C-47, C-11 and C-2 to produce maximum receiver output. Then shift the Oscillator frequency to **150 kc.** and tune the receiver to pick up this signal, disregarding the dial reading at which it is best received. Then tune the oscillator series trimmer, C-61, simultaneously rocking the tuning control (receiver) backward and forward through the signal, until maximum output results from the combined operations. Repeat the alignment of C-45 as in (a) to correct for any change caused by the adjustment of C-61.

Band C—Change the receiver so that it is operative and the dial reads **18,000 kc.** on the "C" Band. Tune the test Oscillator to this same frequency. Then adjust the oscillator trimmer C-43 to produce maximum (peak) output. Two positions of this trimmer will be found which conform with this requirement. The one of least capacitance is correct. Check for the presence of "image" response at **17,080 kc.** by shifting the receiver tuning. If it is received at such a point, the trimmer C-43 has been correctly adjusted to the right peak. *No adjustments are to be made during this check.* Tune the receiver back to the **18,000 kc.** dial marking, readjust C-43 if necessary, and then tune the detector and antenna capacitors C-10 and C-1 for maximum receiver output. No further adjustments are necessary.

Standard Transformer

The transformer used on some models of this instrument is adaptable for voltages and frequencies as given under Ratings A and B of Electrical Specifications. Its schematic and wiring are shown by Figure 7.

Centering Armature

Refer to Figure 11 showing the pickup inner structure. The armature is shown in its proper relation to the magnet pole pieces, i. e., exactly centered. Whenever this centering adjustment has been disturbed, the screws A, B, and C should be loosened and the armature clamp adjusted to the point where the vertical axis of the armature is at right angles to the horizontal axis of the pole pieces, and centered between them. This centering operation may be facilitated by inserting a small rod or nail into the armature needle hole, using it as a lever to test the angular movement of the armature. The limitations of the movement in each direction will be caused by the armature striking the pole pieces. The proper adjustment is obtained when there is equal angular displacement of the armature and adjustment rod or nail to each side of the vertical axis of the magnet and coil assembly. The screws A and B should then be secured, observing care not to disturb the adjustment of the armature clamp. Then place the pickup in a vise and secure the centering spring-clamp by means of the screw C, allowing the centering spring to remain in the position at which the armature is exactly centered between the pole pieces. With a little practice, the correct adjustment of the armature may be readily obtained. The air gap between the pole pieces and the armature should be kept free from dust, filings, and other such foreign materials which would obstruct the movement of the pickup armature.

Damping Block

The viscoloid block which is attached to the back end of the armature shank serves as a mechanical filter to eliminate undesirable resonances and to cause the frequency response to be uniform. Should it be necessary to replace this damping block, it may be done by removing screw D and the cover support bracket from the mechanism and taking off the old viscoloid block. The surface of the armature which is in contact with the viscoloid should be thoroughly cleaned with fine emery cloth. Then insert the new block so that it occupies the same position as it did originally. Make certain that the block is in correct vertical alignment with the armature. The hole in the new viscoloid block is somewhat smaller than the diameter of the armature in order to permit a snug fit. With the viscoloid aligned on the armature, screw D and the cover support bracket should then be replaced. Heat should be applied to the armature (viscoloid side) so that the viscoloid block will fuse at the point of contact and become rigidly attached to the armature. A special tip soldering iron constructed as shown in Figure 12 will be found very useful in performing this operation. The iron should be applied only long enough to slightly melt the block and cause a small bulge on both sides.

Replacing Coil

Whenever there is defective operation due to an open or shorted pickup coil, this coil should be replaced. The method of replacement will be obvious upon inspection of the pickup assembly and by study of the extra way illustrations. Make sure that the new coil is properly centered with the hole in the support strip and glued securely in that position. It is important to readjust the armature as previously explained after reassembly of the mechanism. Only resin core solder should be used for soldering the coil leads in the pickup. This same type of solder should be used when necessary for soldering the centering spring to the armature.

Magnetizing

Loss of magnetization will not usually occur when the pickup has received normal care, due to the fact that the magnet and pole pieces are one unit and the magnetic circuit remains closed at all times. When the pickup has been mishandled, subjected to a strong a.c. field, jolted or dropped, there may be an appreciable loss of magnetic strength, in which case it will be necessary to re-magnetize the entire structure. This should be done by first removing the pickup cover and then placing the pickup assembly on the poles of a standard pickup magnetizer such as the RCA Pickup Magnetizer, Stock No. 9549, and charging the pickup in accordance with the instructions accompanying the magnetizer. It is recommended that the pickup be magnetized with the armature in place. This will require that one pole piece on the pickup magnet may be rotated 180 degrees. This gives the desired clearance for the armature clamp assembly. It is preferable to check the polarity of the pickup magnet and to re-magnetize it so that the same polarity is maintained

RCA MFG. CO., INC.

MODEL D11-2
Parts List

REPLACEMENT PARTS

Stock No.	Description	List Price
	RECEIVER ASSEMBLIES	
4427	Bracket—High or low frequency tone control or volume control mounting bracket	$0.18
5237	Bushing—Variable condenser mounting bushing assembly. Package of 3	.43
11524	Cable—Two conductor cable with two prong male sections of connector plug	.36
11712	Cable—Shielded three conductor cable from volume control (R14) to "C" of No. 4 socket, "G" of No. 6 socket and input transformer	1.24
11713	Cable—Shielded two conductor volume control cable	.80
11223	Capacitor—Adjustable capacitor (C46)	.46
5241	Capacitor—Adjustable capacitor (C61)	.40
11292	Capacitor—22 MMfd. (C9)	.24
11289	Capacitor—50 MMfd. (C8)	.26
11291	Capacitor—115 MMfd. (C50)	.24
11290	Capacitor—400 MMfd. (C60)	.25
11317	Capacitor—600 MMfd. (C34)	.30
11269	Capacitor—800 MMfd. (C39)	.30
3784	Capacitor—900 MMfd. (C31)	.30
11316	Capacitor—1225 MMfd. (C26)	.40
11287	Capacitor—4500 MMfd. (C58)	.30
5107	Capacitor—.0025 Mfd. (C62, C63)	.16
4838	Capacitor—.0.005 Mfd. (C40, C41)	.20
4068	Capacitor—0.005 Mfd. (C33)	.20
4624	Capacitor—0.01 Mfd. (C30)	.54
4937	Capacitor—0.01 Mfd. (C29)	.25
4838	Capacitor—.01 Mfd. (C24*)	.25
11315	Capacitor—0.015 Mfd. (C38)	.20
5196	Capacitor—.035 Mfd. (C37)	.18
4886	Capacitor—0.05 Mfd. (C24*)	.20
4836	Capacitor—0.05 Mfd. (C4, C13, C18, C23)	.30
4835	Capacitor—0.1 Mfd. (C64)	.28
4885	Capacitor—0.1 Mfd. (C7, C19, C27, C52)	.28
4841	Capacitor—0.1 Mfd. (C6)	.22
5170	Capacitor—0.25 Mfd. (C32)	.25
11203	Capacitor—10 Mfd. (C53)	1.18
5212	Capacitor—18 Mfd. (C54)	1.16
11215	Capacitor pack—Comprising one 16 Mfd., two 10 Mfd., and two 8 Mfd. capacitors (C29, C35, C36, C55, C56)	3.85
11201	Clamp—Cable clamp—located near variable tuning condenser—Package of 5	.30
11272	Clamp—Cable clamp—located above antenna terminal	.10
4691	Clamp—Electrolytic capacitor clamp—for stock No. 11215	.15
5215	Coil—Antenna coil—A and G bands (L1, L3, L5, L6, C1, C2)	2.32
11325	Coil—Antenna coil—X band (L3, L4, C2)	1.56
5216	Coil—Detector coil—A and C bands (L7, L8, L11, L12, C10, C12)	2.34
11326	Coil—Detector coil—X band (L9, L10, C11)	1.60
5217	Coil—Oscillator coil—A and C bands (L13, L15, C43, C47)	2.20
11327	Coil—Oscillator coil—X band (L14, L23, C45)	1.44
11320	Coil—Choke coil (L20)	1.00
11318	Capacitor Pack—Comprising one 0.015 Mfd., one .03 Mfd. capacitor, one 27,000 ohm and one 10,000 ohm resistor—(C25, C26, R12, R13)	1.50
5214	Condenser—Three gang variable tuning condenser (C5, C14, C48)	4.42
11205	Volume Control (R14)	1.30
11219	Tone Control—High frequency tone control (R22)	.90
4151	Connector—Four contact female connector for cables, stock Nos. 11712 and 11713	.48
11710	Lead—Shielded antenna lead	.40
8041	Plate—I. F. or R. F. coil shield locking plate with screw—Package of 2	.12
11220	Resistor—Voltage divider resistor—Comprising one 3900 ohm and one 4300 ohm section (R31, R32)	.84
11221	Resistor—Voltage divider resistor—Comprising one 30 ohm, one 28 ohm and one 195 ohm section (R28, R29, R30)	.48
5112	Resistor—1000 ohm—Carbon type—½ watt (R2)—Package of 5	1.00
3706	Resistor—1800 ohm—Carbon type—½ watt (R15)—Package of 5	1.00
5139	Resistor—2200 ohm—Carbon type—½ watt (R20)—Package of 5	1.00
5175	Resistor—5600 ohm—Carbon type—½ watt (R21)—Package of 5	1.00
2711	Resistor—10,000 ohm—Carbon type—1 watt (R25)—Package of 5	1.10
11305	Resistor—22,000 ohm—Carbon type—½ watt (R16, R17)—Package of 5	1.00
11300	Resistor—33,000 ohm—Carbon type—1/10 watt (R24)—Package of 5	.75
5033	Resistor—33,000 ohm—Carbon type—1 watt (R23)—Package of 5	1.10
3118	Resistor—100,000 ohm—Carbon type—½ watt (R1, R3, R5, R6)—Package of 5	1.00
5027	Resistor—150,000 ohm—Carbon type—½ watt (R19)—Package of 5	1.00
11151	Resistor—2.2 megohm—Carbon type—½ watt (R9, R10, R11)—Package of 5	1.00
5249	Shield—R. F. coil shield	.30
11273	Shield—Radiotron shield	.25
5250	Shield—I. F. transformer shield	.22
11199	Socket—Dial lamp socket	.14
4794	Socket—4-contact Radiotron socket	.15
11197	Socket—6-contact Radiotron socket	.14
11198	Socket—7-contact Radiotron socket	.15
5224	Switch—Low frequency tone control switch and power switch (S11, S13)	1.00
11256	Switch—Range switch (S1, S2, S3, S4, S5, S6, S7, S8, S9, S10, S12)	2.44
5238	Terminal—Antenna terminal assembly	.14
11218	Transformer—Audio driver transformer (T2)	2.58
11216	Transformer—First intermediate frequency transformer (L16, L17, C16, C17)	2.15
11217	Transformer—Second intermediate frequency transformer (L18, L19, C20, C21, C22, R7, R8)	3.10
11213	Transformer—Power transformer—105-125-130-140-250 volts—40-60 cycles (T1)	5.10
11313	Transformer—Power transformer—105-125 volts—25-60 cycles	7.18
	DRIVE ASSEMBLIES	
5343	Arm—Band indicator operating arm	.42
10194	Ball—Steel ball for drive assembly—Package of 20	.25
8054	Cam—Five position cam for station selector drive assembly	.28
4422	Clutch—Tuning condenser drive clutch assembly—Comprising shaft, balls, ring, spring and washers, assembled	1.00
8048	Coupling—Flexible coupling for variable capacitor (includes indicator shaft)	.70
11693	Dial—Station selector dial and cam assembly	1.00
8045	Disc—Drive disc and gear assembly	.46
11692	Drive—Tuning condenser drive assembly, complete	6.45
8044	Escutcheon—Dial escutcheon with vernier scale	1.08
8046	Gear—Indicator shaft drive gear and vernier idler with one spring	.72
8040	Gear—Gear sector and band indicator operating link (link connects to arm on band switch)	.15
8033	Indicator—Station selector indicator pointer	.12
8051	Link—Complete with roller and spring	.30
8049	Pinion—Vernier pointer drive pinion and shaft	.55
4669	Screw—Square head No. 8-32x5/32 set screw—Package of 10	.25
1047	Spring—Coil spring for indicator shaft drive gear and vernier idler (stock No. 8046)	.12
8052	Spring—Coil spring for link—Package of 5	.32
8043	Stud—Band indicator operating arm stud—Package of 5	.25
	EJECT ARM ASSEMBLIES	
11541	Arm—Eject arm, complete	.82
11533	Ball—¼-inch diameter steel ball—Package of 10	.30
10129	Ball—¼-inch diameter steel ball—Package of 20	.25
11529	Bearing—Ejector tip bearing and nut	.32
11538	Bracket—Eject arm bracket	1.72
11537	Collar—Eject arm shaft collar and set screw	.24
11540	Cover—Eject arm cover	1.52
11536	Cushion—Counter balance roller cushion—Located inside of eject arm	.14
4055	Post—Vertical adjustment post—Located on eject arm bracket	.30
3729	Roller—Eject arm counter balance roller—Located inside of eject arm	.45
4580	Screw—No. 6—32—¼-inch square head set screw for eject arm collar—Package of 10	.25
11534	Screw—No. 8—36—⅛-inch special screw for eject arm tip center adjustment—Package of 10	.14
11535	Shaft and Collar—Eject arm vertical action shaft and collar assembly	.15
11528	Silencer—Ejector tip silencer	.14
4067	Spring—Eject arm bracket spring—Package of 10	.30
11531	Spring—Ejector tip spring—Package of 10	.42
11530	Tip—Ejector tip with tip center, adjusting screw and cap	.32
11539	Yoke—Eject arm yoke assembly	.94
	PICKUP AND ARM ASSEMBLIES	
11720	Arm—Pickup arm, complete—less escutcheon and pickup unit	4.65
11724	Armature—Pickup armature	.38
11546	Back—Pickup back	.32
11723	Coil—Pickup coil (L24)	.52
11545	Cover—Pickup front cover	.32
11546	Cover—Pickup back cover with mounting screws	.14
3737	Damper—Pickup damper—Package of 5	.65
3516	Damper—Damper assembly for pickup arm base—Comprising one upper and one lower damper—one upper bushing and one lower bearing	.14
11723	Escutcheon—Pickup arm escutcheon	.62
11721	Pickup—Pickup unit, complete	4.75
11549	Screw—Pickup front cover screw—Package of 10	.42
3387	Screw, nut and washer for mounting pickup to arm—Package of 10	.60
11547	Screw—Pickup needle screw—Package of 10	.42
	OPERATING MECHANISM	
5302	Cam—Cam and gear assembly	1.18
6806	Clutch—Trip lever friction clutch	.30
11558	Cover—Metal cover for trip lever and friction finger assembly	.36
6809	Finger—Manual index lever finger assembly	.25
3670	Finger—Friction finger assembly	.32
11554	Lever—Manual index lever—less pin	.62
11556	Lever—Main lever and link assembly	2.10
11557	Lever—Main spring lever	.42
3677	Lever—Pickup arm cable lever assembly—Comprising lever with cable screw, spring and nut	.40
11555	Lever—Trip lever and friction clutch assembly	.94
6903	Pawl—Trip pawl assembly	.60
4124	Plate—Eject arm actuating plate assembly	.30
4563	Screw—Cable lever screw and nut—Package of 10	.60
4564	Screw—Manual index lever finger set screw—Package of 10	.20
4039	Screw—Trip lever clutch tension adjustment screw—Package of 10	.22
4566	Screw—Special screw used to fasten main lever and link assembly bushing—Package of 10	.30
11539	Spacer—Pickup arm mounting spacer	.28
4127	Spring—Actuating spring—Package of 10	.24
3666	Spring—Cable lever tension spring—Package of 10	.44
4565	Spring—Manual index lever finger tension spring—Package of 10	.30
4061	Spring—Main spring lever tension spring—Package of 10	.28
2895	Spring—Trip lever latch plate tension spring—Package of 10	.30
2917	Washer—Spring washer, "U" type—Package of 10	.25
	MOTOR ASSEMBLIES	
9012	Motor—105-125 volts—25 cycles (M1)	14.16
9014	Motor—105-125 volts—50 cycles (M1)	19.72
9011	Motor—105-125 volts—60 cycles (M1)	19.72
4562	Suspension Spring—Motor mounting spring, washer, and stud assembly—Comprising six springs, six cup washers, three spring washers and three studs	.58
	AUTOMATIC SWITCH ASSEMBLIES	
3994	Cover—Motor switch cover	.26
10184	Plate—Automatic brake latch plate—Package of 5	.40
10174	Springs—Automatic brake springs—Package of 2	.50
6805	Switch Assembly—Automatic switch, complete	1.90
3322	Switch—Motor switch (S15)	.75
	MOTOR BOARD ASSEMBLIES	
11553	Escutcheon—Index escutcheon engraved Manuel—12-10	.44
3764	Nut—Cap nut for motor board suspension assembly—Package of 4	.40
3672	Pin—Manual index pin	.42
11551	Rest—Pickup rest	.14
3454	Roller—Pickup arm cable guide roller—Comprising bracket roller and guide pin	.34
3783	Suspension Spring—Suspension spring, washer and bolt assembly for motor board—Comprising one bolt, two cup washers, two springs, two "C" washers and one cap nut	.42
4671	Switch—Operating switch—toggle type (S14)	.72
11542	Cover—Turntable cover	.88
11599	Turntable, complete	2.90
11348	Screw—No. 8-32—¼-in. headless cupped point set screw for knob (Stock No. 11346)—Package of 10	.32
11381	Socket—Tuning lamp socket and cover	.45
11349	Spring—Retaining spring for knob (Stock No. 11347)—Package of 5	.15
11714	Transformer—Phonograph input transformer—Comprising 1 transformer, 1 choke coil, 3 resistors and 3 capacitors (T4, L25, C65, C66, C67, R35, R34, R36)	3.96
11715	Volume Control—Phonograph volume control (S16, S17, R33)	1.55
	REPRODUCER ASSEMBLIES	
8059	Board—Reproducer terminal board (2 terminals)	.14
8060	Bracket—Output transformer mounting bracket	.14
11304	Cable—Reproducer cable—Complete with female connector	.80
8058	Clamp—Cone rim clamp—Package of 4	.44
11189	Coil—Field coil, magnet and cone housing (L22)	10.60
8056	Cone—Reproducer cone (L21)	1.58
5039	Connector—4 prong male connector plug for reproducer	.25
5040	Connector—4 contact female connector socket for reproducer cable	.25
9620	Reproducer, complete	16.32
8057	Transformer—Output transformer (T3, C42)	3.22
	MISCELLANEOUS ASSEMBLIES	
11881	Base—Phonograph compartment lamp base	.55
4391	Box—Needle box	.70
11191	Bracket—Radiotron tuning lamp mounting bracket—less clamp (Stock No. 11192)	.12
11319	Cable—Radiotron tuning lamp cable and plug—approximately 25-in. long	1.38
11716	Cable—Two conductor shielded cable—Volume control "H-J and F" to chassis cable (Stock No. 11712)	.64
11717	Cable—Five conductor shielded cable from volume control "A-B-C-D-G-K" to input transformer terminals No. 4 and No. 7	1.14
11192	Clamp—Radiotron tuning lamp mounting clamp—less bracket (Stock No. 11191)	.12
6123	Connector—Four contact male connector plug for cable (Stock No. 11717)	.30
11570	Connector—Four contact male connector for cable (Stock No. 11716)	.32
11276	Escutcheon—Radiotron tuning lamp escutcheon	.40
11379	Escutcheon—Station selector escutcheon and crystal	1.08
11346	Knob—Station selector knob—Package of 5	.75
11347	Knob—Volume control, tone control, power switch or range switch knob—Package of 5	.75
11383	Resistor—1 megohm—Carbon type—½ watt (R27)—Package of 5	.75
11711	Shade—Phonograph compartment lamp shade	.16

PRICES ARE SUBJECT TO CHANGE WITHOUT NOTICE

©John F. Rider, Publisher

MODEL T11-8
Schematic
Phono. Pickup

RCA MFG. CO., INC.

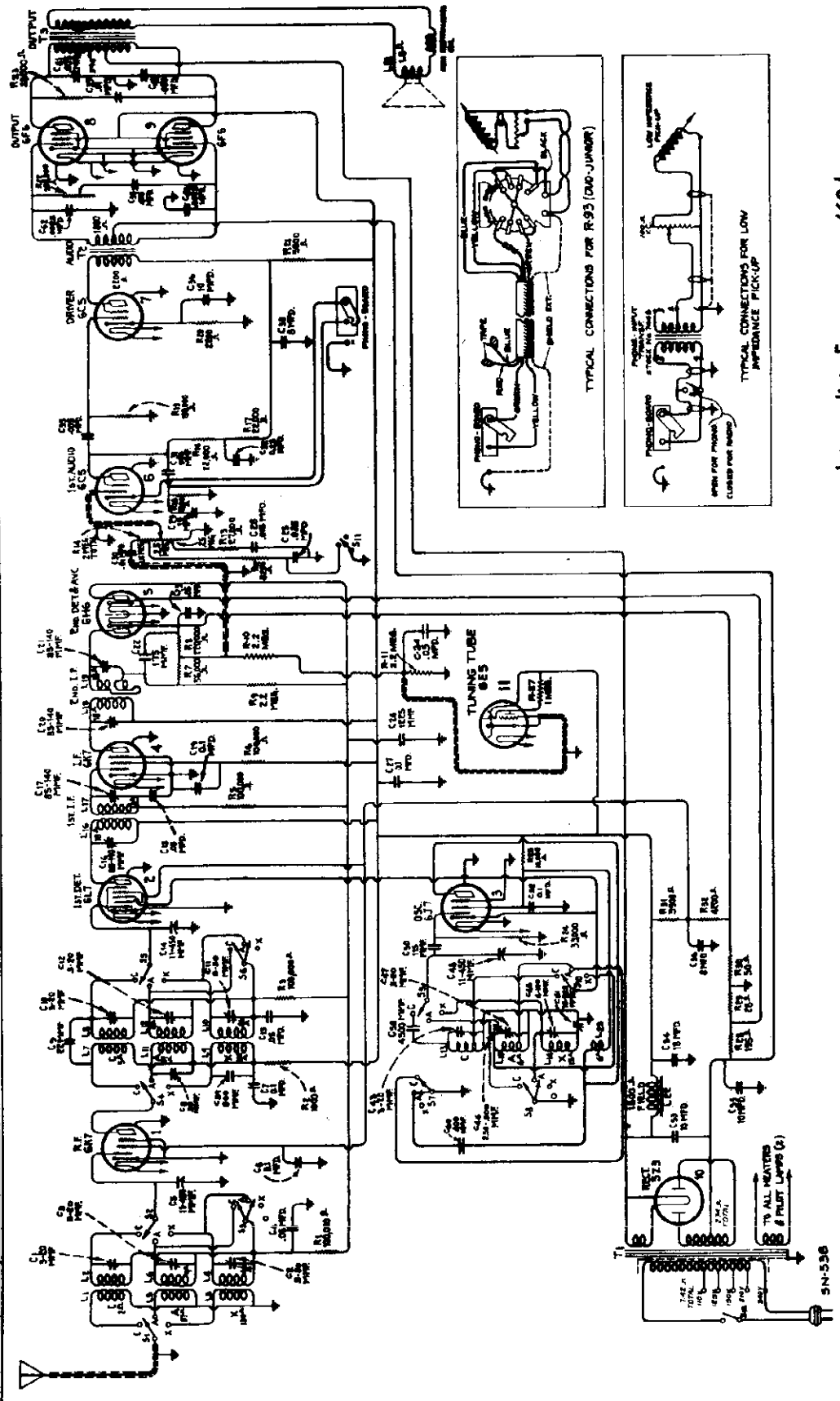

Intermediate Frequency .. 460 kc.

Frequency Ranges

Band X	140 kc.— 410 kc.
Band A	540 kc.— 1,800 kc.
Band C	5,700 kc.—18,000 kc.

Power Supply Ratings

Rating A	105-125 volts, 50-60 cycles, 130 watts
Rating B	105-125 volts, 25-60 cycles, 135 watts
Rating C	100-130/140-160/195-250 volts, 40-60 cycles, 135 watts

Power Output Ratings

Undistorted Output	8.5 watts
Maximum Output	11.5 watts

Loudspeaker

Type	8-inch Electrodynamic
Voice Coil Impedance	2¼ ohms at 400 cycles

Band X	150 kc. (osc.), 400 kc. (osc., ant., det.)
Band A	600 kc. (osc.), 1,720 kc. (osc., ant., det.)
Band C	18,000 kc. (osc., ant., det.)

©John F. Rider, Publisher

RCA MFG. CO., INC.

MODEL T11-8
Chassis Wiring

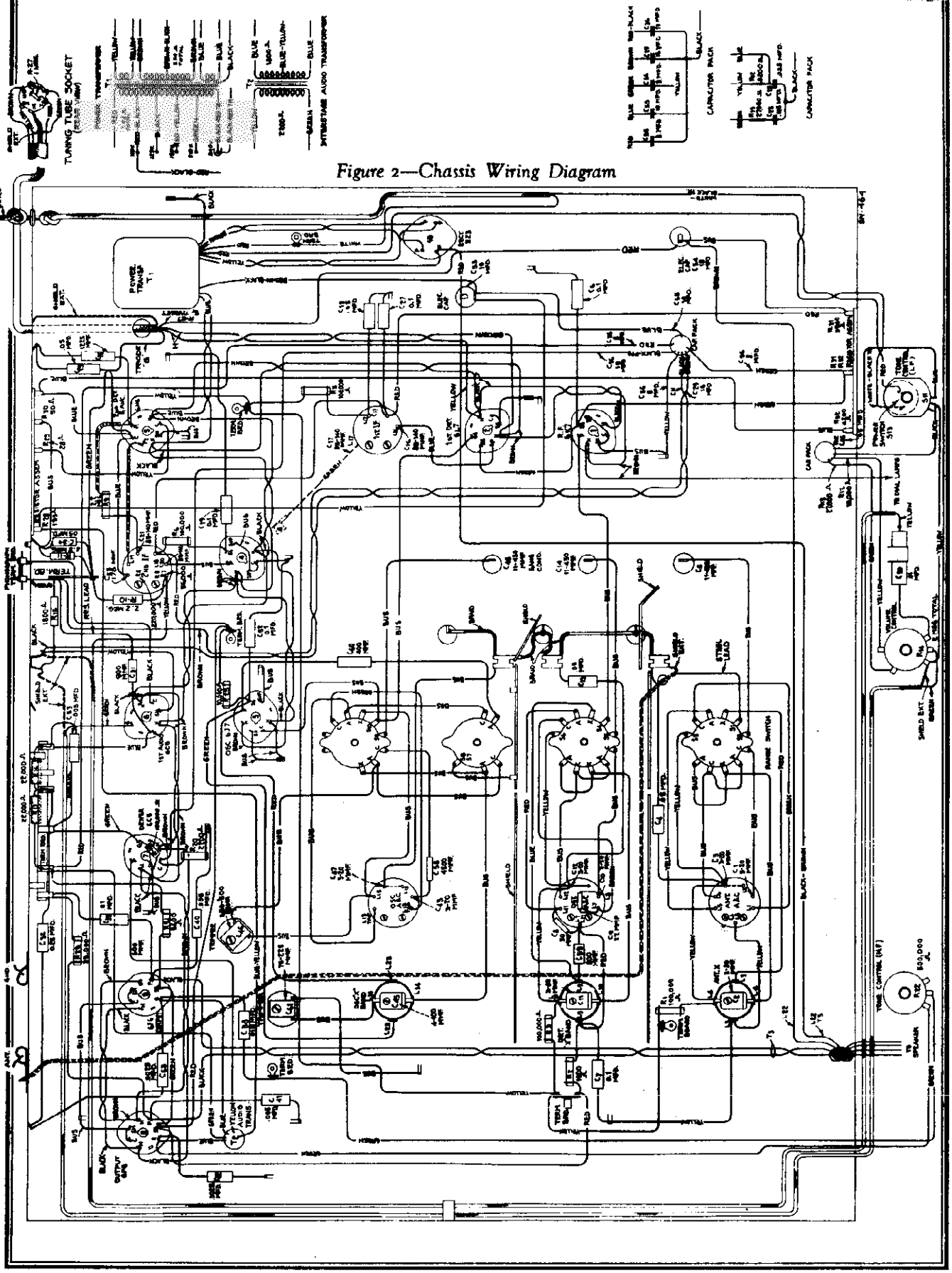

Figure 2—Chassis Wiring Diagram

©John F. Rider, Publisher

MODEL T11-8
Socket, Trimmers
Voltage, Speaker
Transformer

RCA MFG. CO., INC.

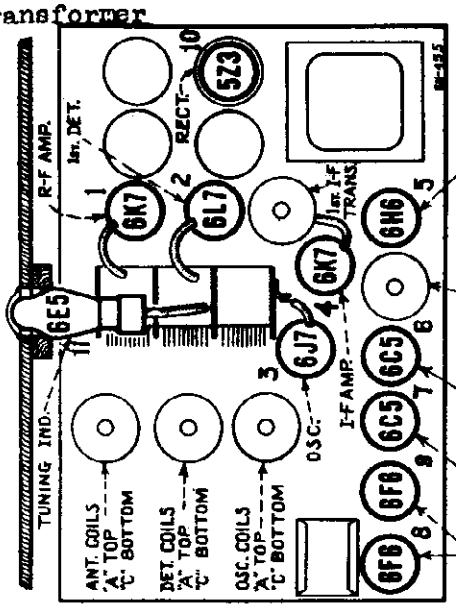

Figure 4—Radiotron and Coil Locations

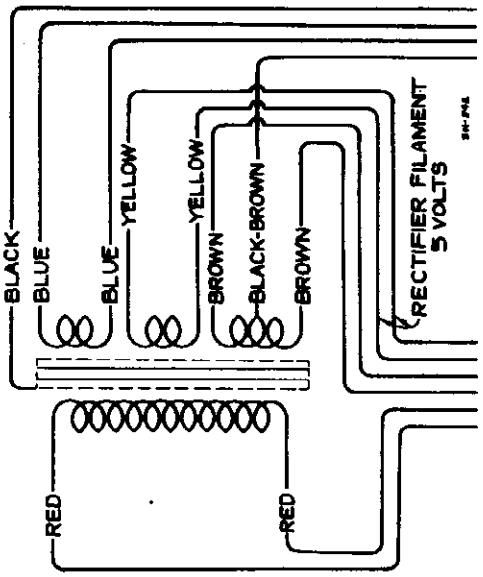

Figure 7—Standard Power Transformer Connections

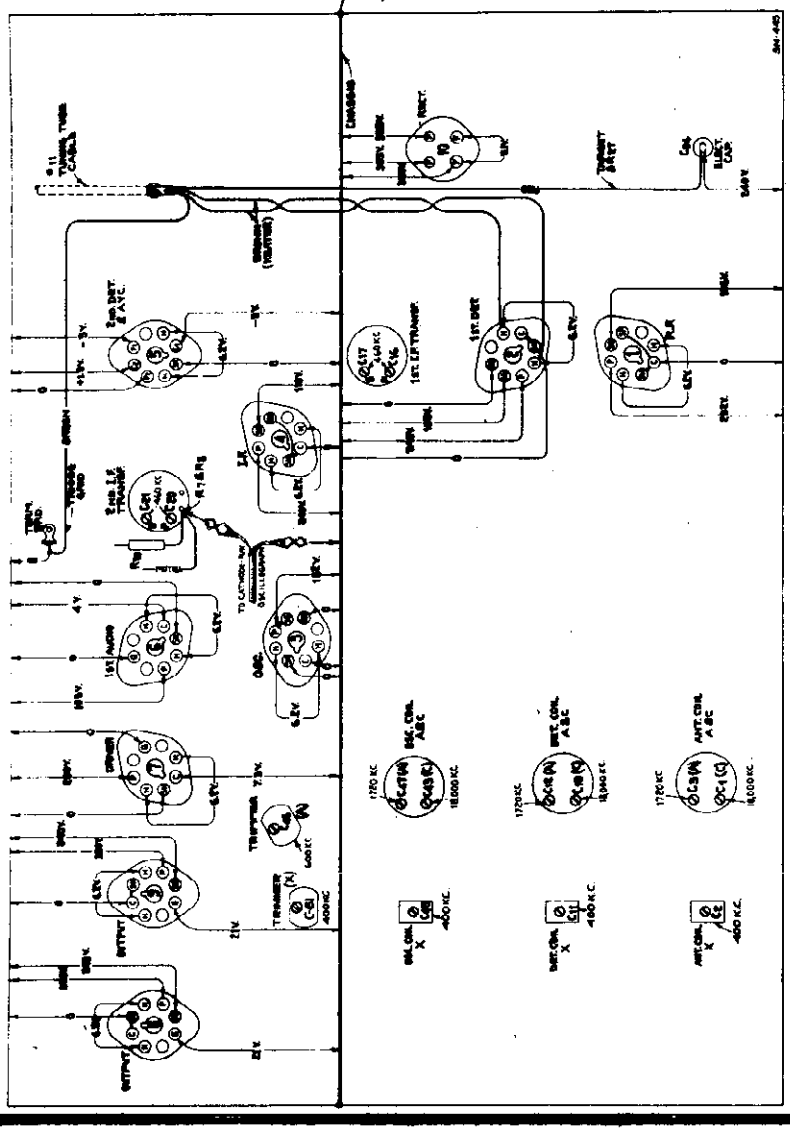

Figure 6—Trimmer Locations and Radiotron Socket Voltages
Measured at 115 volts, 60 cycles—No signal input

For Figure 5 Alignment Apparatus Connections, see Model 9K, Fig. 4

Mechanical Specifications

Height	$23\frac{3}{16}$ inches
Width	17 inches
Depth	$13\frac{1}{2}$ inches
Weight (Net)	48 pounds
Weight (Shipping)	$60\frac{1}{2}$ pounds
Chassis Base Dimensions	$15\frac{1}{2}$ inches x $10\frac{1}{2}$ inches x $3\frac{1}{2}$ inches

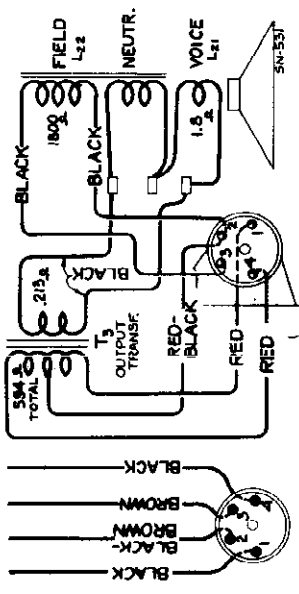

Figure 3—Loudspeaker Wiring

©John F. Rider, Publisher

RCA MFG. CO., INC.

MODEL T11-B
Circuit Data
Alignment, Part 1

GENERAL FEATURES

This instrument comprises an eleven-tube chassis mounted in a table type of cabinet. Its tuning ranges cover the long wave, standard broadcast, short wave broadcast, amateur and aviation bands. The following points of design are of particular importance:

Metal Radiotrons

The new metal tubes are used in the radio receiver for amplifying and detecting purposes. These tubes make possible a greater range of stable amplification not previously attainable with corresponding glass types. Their metal envelopes form a perfect electrostatic and electromagnetic shield, precluding the former necessity for elaborate shielding by means of cans. The metal tubes are especially adaptable to the modern, extended-range receivers because of their efficient shielding and their favorable internal characteristics.

Tuning Condenser

The variable tuning condenser is supported by a new design of shock-proof mount which has been developed by our engineers to prevent chassis vibration from producing audio frequency howl.

Chassis

Servicing convenience has been a governing factor in the layout of the chassis parts and the associated wiring. Each part has been situated so that a minimum of wiring is necessary. Adjustments provided by means of substantial trimmers are mounted where they may be easily reached. Holes are included in the shield cans of the r-f coil system for testing the tuning with a Tuning Wand.

Loudspeaker

An eight-inch, electrodynamic reproducer unit is used to handle the high level output of the receiver. The speaker is designed to operate in such manner with the acoustics of the cabinet that the best quality of reproduction is obtained. Connections from the chassis to speaker are made through a plug and connector, which permits either unit to be removed quickly for service.

Color Band Dial

The station indicating dial is neatly designed with each scale identified by a different color. As the range switch is changed from one band to another, an index pointer moves so as to point to a short strip of color at the lower part of the dial to indicate the band being used. A push-in clutch arrangement gives a 10-to-1 or 10-to-1 drive ratio. The vernier pointer has a ratio of 20-to-1 with respect to the main pointer.

CIRCUIT ARRANGEMENT

The Superheterodyne principle of operation forms the basis of the circuit design. A single, tuned r-f stage is used ahead of the first detector. The functions of oscillator and detector are performed by two separate tubes. One i-f stage is employed and designed to operate at 460 kc. The combined second detector and a.v.c. stage uses an RCA-6H6 double diode. The audio system consists of two single amplifier stages working in cascade with a push-pull power output stage. The loudspeaker is an electrodynamic type, receiving its field supply from the rectifier and filter system and simultaneously acting as a filter reactor. Full wave rectification is performed in the RCA-12Z3 tube. The outstanding features of electrical design are concerned with the following:

Tuned Circuits

A total of seven circuits are tuned to provide gain and selectivity to the incoming signal. The variable gang condenser resonates the antenna transformer secondary, the detector transformer secondary and the oscillator coil. Alignment trimmers are included for each of these same circuits. Additional trimmers are used on the i-f transformers, tuning both the secondaries and primaries to 460 kc. There are separate groups of antenna, detector and oscillator coils for each of the tuning ranges. They are placed into operation by means of a rugged rotary switch.

First Detector

This stage has unusually good high frequency mixing efficiency. The tube used, an RCA-6L7, is a new hexode type. The signal is supplied to the first control grid and the oscillator is fed in on a second control grid, a screen grid separating the two. The arrangement of the grids prevents degenerative difficulties, particularly at the higher frequencies. The second grid is direct-connected to the cathode of the oscillator tube and has no d-c bias.

Oscillator

The oscillator circuit is worthy of careful study inasmuch as it is different from the type ordinarily employed. It has self-stabilizing properties which are very advantageous for short wave operation. The generated frequency remains substantially constant, the circuit being unaffected by variation of line voltage and other similar influences. Output also remains uniform over the individual tuning ranges. The switching of the tuning coils is arranged so as to short those not in use in order to prevent absorption or any resistive effects in the particular band being tuned.

Detector and A.V.C.

The modulated signal as obtained from the output of the i-f system is detected by an RCA-6H6 double diode tube. The audio frequency secured by this process is passed on to the r-f system for amplification and final reproduction. The d-c voltage which results from detection of the signal, is used for automatic volume control. This voltage, which develops across resistors R-7 and R-8, is applied as automatic control grid bias to the r-f, first detector and i-f tubes through suitable resistance-capacitance filter circuits. The second diode of the RCA-6H6 is used to supply residual bias for these controlled tubes under conditions of little or no signal. This diode, under such conditions, draws current, which flows through resistors R-7, R-8 and R-9, thereby maintaining the desired minimum operating bias on such tubes. On application of signal energy above a certain level, however, the auxiliary bias diode ceases to draw current and the a.v.c. diode takes over the biasing function. The cathode and anode of the signal-a.v.c. diode have positive potential in respect to chassis-ground and cathodes of the a.v.c. controlled tubes when no signal is being received.

Audio System

Manual volume control of the detected signal is effected by an acoustically tapered potentiometer in the grid circuit of the first a-f stage. This control has tone compensating filters connected to two points thereon. These filters effect the correct aural balance at different volume settings. A music-speech switch (low frequency tone control) is associated with one of the compensation filters. The purpose of this control is to make speech reproduction more intelligible and to reduce hum obtained from [illegible] as a carrier. The driver stage of the audio system uses an RCA-6C5 which is resistance coupled to the first a-f tube and transformer coupled from the push-pull power output stage.

Tuning Indicator

A cathode-ray tube is used as a means of visually indicating when the receiver is accurately tuned to the incoming signal. This tube is of new design and comprises an amplifier section and a cathode-ray section built in the same glass envelope. The cathode-ray section consists of a conically shaped fluorescent screen, upon which a pattern is formed by an effect of the detected signal after said effect has been amplified by the amplifier section which is fed from the detector diode circuit. The size of the pattern is determined by the strength of the signal voltage, so that any change of tuning may be readily observed in order to facilitate tuning to exact resonance.

SERVICE DATA

The various diagrams of this booklet contain such information as will be needed to indicate causes for defective operation when such develops. The ratings of the resistors, capacitors, coils, etc., are indicated adjacent to the symbols signifying these parts on the diagrams. Identification tables such as R-1, L-2, C-1, etc., are provided for reference between the illustrations and the Replacement Parts List. The coils, reactors, and transformer windings are rated in terms of their d-c resistances only. Ratings of less than one ohm are generally omitted.

Alignment Procedure

Eleven alignment trimmers are provided in the r-f, first detector and oscillator tuning system and four are used in the i-f system. All of these are accurately adjusted during manufacture and should remain in proper alignment unless affected by abnormal conditions of climate or have been subjected to other means. Loss of sensitivity, improper tone quality and poor selectivity are the usual indications of improper alignment.

Correct performance of the receiver can only be obtained when the trimmer adjustments have been made by a skilled service man with the use of adequate and reliable test equipment. Such apparatus as may be required for alignment of this particular instrument is illustrated and described on a separate page of this booklet.

Two methods of alignment are applicable. One utilizes a Cathode-Ray Oscillograph as a means of output indication and the other follows former procedure where a glow type indicator or meter is used. The oscillographic method is much to be preferred, since greater accuracy is possible from the type of indication afforded. There are no approximations necessary as with the meter or aural method, but each adjustment can be made with definite precision. Both methods are hereinafter outlined so that alignment operations may be made according to the equipment available.

It is wise to determine the necessity for alignment as well as the direction of misalignment before making adjustments. The RCA Tuning Wand is an instrument designed particularly for such a purpose.

The Tuning Wand consists of a bakelite rod having a small brass cylinder at one end and a core of finely divided iron at the other. It may be inserted into a tuned coil while a signal of the normal resonance frequency is being supplied to such coil to obtain an indication of the tuning. Holes are provided in the top of the r-f shield cans for entrance of the Wand. The presence of either end of the Wand will cause a change in tuning which will be indicated as the receiver output is an increase or decrease in signal level. If there is a decrease of output when either end is inserted, the tuning is correct and will require no adjustment. However, should there be an increase of output due to the iron core end decrease with the brass cylinder, an increase in inductance or capacitance is indicated as necessary to bring the circuit into line. The trimmer involved should therefore be increased accordingly. If the brass cylinder end causes an increase in output while the iron end causes a decrease, reduction of inductance will be necessary to place the circuit in alignment. This is equivalent to decreasing the trimmer concerned. The following tabulation gives the various changes and the adjustments required:

WAND	SIGNAL	TRIMMER
Brass	Decrease	Needs Increase
Iron	Decrease	
Brass	Increase	Decrease
Iron	Decrease	
Brass	Decrease	Increase
Iron	Increase	

CATHODE-RAY ALIGNMENT

Equipment

A standard source of alignment frequencies is required. Such a source should consist of an RCA Full Range Oscillator, Stock No. 9191. Output indication should be by means of an RCA Stock No. 9147 Cathode-Ray Oscillograph. An RCA Stock No. 9118 Frequency Modulator will be needed to sweep the generated signal and synchronize it with the Oscillograph in order to obtain visual representation of the resonant characteristic of the circuit being tuned on the cathode-ray fluorescent screen.

I-F Trimmer Adjustments

The four trimmers of the two i-f transformers are located as shown by Figure 6. Each must be aligned to a basic frequency of 460 kc. The last transformer must be aligned firstly and the first transformer aligned secondly. For such a process, it is necessary to feed the output of the Full Range Oscillator to the stages in their order of alignment, adjusting the trimmers of each transformer and observing the effect at the second detector output on the Cathode-Ray Oscillograph. The proper point of connection of the Oscillograph is with its vertical "high" input terminal attached to the juncture of R-7 and R-8, as illustrated in Figure 6, and with the "G" or ground terminal to the chassis. The "Ext. Sync." terminals of the Oscillograph should be connected to the Frequency Modulator as shown by Figure 5. A .001 mfd. capacitor (supplied in series with the Oscillator "Ant." lead) will prevent the voltages of the stage under alignment from becoming upset. The vertical "A" amplifier should be "On" for the ensuing adjustments and its gain control kept at maximum. For each adjustment, the Oscillator output must be regulated so that the image obtained on the Oscillograph screen will be of the minimum size convenient for accurate observation. Proceed further as follows:

(a) Place the receiver, Oscillograph and test Oscillator in operation. Set the receiver range switch to Band "A" and tune the station selector to a point where no interference will be encountered from signal pickup or from the RCA-6J7 oscillator, removing the tube if necessary. Set the Oscillograph horizontal "B" amplifier to "Tuning" and control its gain so that the luminescent spot sweeps a straight line trace completely across the screen. Place the tuning control to "Int." Adjust the intensity and focusing controls of the Oscillograph to produce the correct size and strength of spot.

(b) Attach the output of the test Oscillator between the control grid cap of the RCA-6K7 i-f tube and chassis ground as shown typically by Figure 5. Tune the Oscillator to 460 kc. and set its modulation switch to "On." Regulate its output until the signal produces a wave pattern on the Oscillograph screen, adjusting the Oscillograph controls to give a shape which is convenient for peak indications. Cause the image to stand still on the screen by manipulation of the frequency and synchronizing controls. Then carefully tune the two trimmers C-10 and C-11 of the second i-f transformer to produce maximum amplitude (vertical deflection) of the oscillographic image. Under this condition the transformer will be sharply resonated to 460 kc.

(c) The Frequency Modulator should then be placed in operation and interconnected with the Full Range Oscillator by means of the special shielded patch cord. Figure 5 shows the proper arrangement. Set the Frequency Modulator sweep range switch to its "Lo" position and turn the Oscillator modulation switch to "Off." Change the tuning control of the Oscillograph to "Ext." and place the range switch to its No. 2 position. Then carefully shift the tuning of the Oscillator so as to increase its frequency, until two distinct and similar waves appear on the Oscillograph screen and become exactly co-incident at their highest points. This condition will be found to occur at an Oscillator tuning of approximately 840 kc. The curves will be identical in shape but appearing in reversed positions. Adjust the frequency control of the Oscillograph in order to cause the waves to conform with the above requirement and to make them remain motionless on the screen. This will require a setting of approximately ¼ clockwise rotation of the frequency control. The trimmers C-10 and C-11 should then be re-adjusted so that the two curves move together and become exactly coincident throughout their lengths, maintaining the maximum amplitude at which this condition can be brought about.

(d) Leaving the equipment connected and adjusted as in (c), change the Oscillator output to the control grid cap of the RCA-6L7 first detector tube. Then adjust the first i-f transformer trimmers C-16 and C-17 so that the forward and reverse waves appearing on the Oscillograph coincide throughout their lengths and have maximum amplitude. The shape of the composite wave obtained from this operation is a true representation of the overall tuning characteristic of the i-f system.

R-F Trimmer Adjustments

For Bands A and X, adjustments must be made at the high and low frequency ends of the range. On Band C, alignment is required only at the high frequency end.

Locations of the various antenna, detector and oscillator coil trimmers are shown by Figure 6. The test Oscillator should be removed from connection with the i-f system and its output connected to the antenna-ground terminals of the receiver. No changes are to be made in the connections of the Oscillograph at the second detector. During the following adjustments, the Oscillator output should be regulated as often as is necessary to keep the oscillographic image as low as is practically observable. Adherence to this procedure will obviate the broadness of tuning that would result from a.v.c. action on a stronger signal. Proceed with the adjustments as follows:

CALIBRATION

Set the receiver range switch to Band A and rotate the station selector until the tuning condenser plates are in full mesh (maximum capacitance). Then move the main dial pointer until it points exactly to the horizontal line at the low frequency end of the Band A scale. Correct the setting of the vernier second hand pointer to read zero.

BAND A

(a) With the receiver range switch in its Band A position, tune the station selector until the dial pointer is at a reading of 1720 kc. Adjust the test Oscillator to 1720 kc. (modulation "On" and Frequency Modulator disconnected) and increase its output to produce a response on the Oscillograph. Carefully align the oscillator, detector and antenna trimmers, C-47, C-12 and C-3 respectively, so that each brings about maximum amplitude of output as shown by the wave on the Oscillograph. It will be necessary to have the tuning control of the Oscillograph on "Int." for this operation. After each trimmer has been peaked, the Oscillograph tuning control should be set to "Ext." and the Frequency Modulator placed into operation with its connections to the Oscillator and Oscillograph made in accordance with Figure 5. Turn the modulation switch of the Oscillator to "Off" and rotate the Oscillator (increase frequency) until the forward and reverse waves show on the Oscillograph and become coincident at their highest points. Adjust the trimmers C-47, C-12 and C-3 again, testing each to the point which produces the best coincidence and maximum amplitude of the wave images.

(b) Remove the Frequency Modulator cable from the Oscillator and shift the signal frequency to 600 kc. Place the modulation switch to "On". Tune the receiver to pick up this signal, disregarding the dial reading at which it is best received. Then insert the Frequency Modulator plug and retune the Oscillator (modulation "Off") until the two similar forward and reverse waves appear on the screen. For this adjustment, it is advisable to shift the Oscillator to the 200-400 kc. range using the third harmonic of the generated signal in order to obtain the desired range of sweep. The oscillator series trimmer, C-46, should then be adjusted to produce maximum amplitude of the images. No rocking will be necessary on the station selector inasmuch as the signal frequency is being "wobbled" by the Frequency Modulator to produce the same effect. After completing this adjustment, the trimmer C-47 should be re-aligned as in (a) to correct for any change brought about by the adjustment of C-46.

BAND X

(a) Disconnect the Frequency Modulator and tune the test Oscillator to a frequency of 400 kc. (Modulation "On"). Place the receiver range switch in its Band X position and turn the station selector until the dial pointer reads 400 kc. Adjust the Oscillograph timing control to "Int." Then align each of the trimmers C-47, C-11 and C-2 to the point producing maximum output at the Oscillograph. Place the Frequency Modulator in operation and attach it to the Oscillator in the normal manner. Change the Oscillograph tuning to "Ext." Increase the frequency of the Oscillator (modulation "Off") until the two waves appear and become coincident at their highest points, approximately at 462 kc. They may be made to remain stationary on the screen by manipulation of the Oscillograph range switch and frequency control. Readjust the three trimmers C-47, C-11 and C-2 to give maximum amplitude and complete coincidence of the waves.

(b) Change the test Oscillator so that it delivers a signal of 150 kc. with the Frequency Modulator disconnected. Tune this signal on the receiver which has previously been set to Band X, disregarding the dial reading at which the signal is best received. Then interconnect the Frequency Modulator with the Oscillator and [illegible] the latter to the point at which the two similar waves appear on the screen. Adjust trimmer C-47, for maximum amplitude of the wave images. Rocking of the tuning condenser will not be necessary as the Frequency Modulator sweep automatically operates. Repeat the adjustment of C-47 as explained in (a) to correct for any subsequent error brought about by the adjustment of C-46.

BAND C

(a) Turn the range switch of the receiver to its Band C position and tune the station selector until the dial pointer reads 18,000 kc. Set the test Oscillator to the same frequency (modulation "On") and Frequency Modulator disconnected) regulating the output to the level required for convenient observation. Adjust the trimmer C-43 to the point producing maximum output as indicated on the Oscillograph. Check for the presence of the proper "image" signal by turning the receiver to 17,080 kc. The 18,000 kc. signal of the Oscillator will be received at this point if the adjustment of C-43 has been properly made by using the position of least capacitance which gives maximum receiver output. It may be necessary to increase the output of the Oscillator in order to get an indication of the "image". No adjustments should be made during this check.

(b) Return the receiver tuning to 18,000 kc., realign C-43 if necessary, and then adjust the detector and antenna trimmers, C-10 and C-1, for maximum signal output as evidenced by the oscillographic image. No further adjustments are to be made on this band.

OUTPUT INDICATOR ALIGNMENT

To align the receiver by means of an output indicator other than a Cathode-Ray Oscillograph will require the use of a standard test Oscillator, such as that recommended above, for the source of signals and means of indication for the output. The RCA Neon Output Indicator, Stock No. 4317, will be found very satisfactory for such use. It should be connected across the voice coil circuit of the loudspeaker or across the output transformer primary.

I-F Alignment

Connect the test Oscillator to the control grid cap of the i-f tube. Advance the volume control of the receiver to its full on position. Tune the test Oscillator accurately to 460 kc. and align the trimmers C-20 and C-21 to give maximum receiver output. Regulate the Oscillator output during this adjustment so that the output indication is as small as can be conveniently observed. After completing the adjustments of these trimmers, re-connect the Oscillator so that it will feed into the control grid circuit of the RCA-6L7 first detector. Then tune the first i-f transformer trimmers C-16 and C-17 for maximum receiver output.

R-F Alignment

After completing the i-f adjustments, it is advisable to correct the line-up of the circuits ahead of the first detector. The test Oscillator should be connected to the antenna-ground terminals of the receiver and the manual volume control turned to its maximum position. For each adjustment, the Oscillator output should be maintained as low as possible in order to avoid broadness of tuning which would result from a.v.c. action on a stronger signal.

©John F. Rider, Publisher

MODEL T11-8
Alignment, Part 2
Parts List

RCA MFG. CO., INC.

Band A—This band should be aligned by supplying a **1720 kc.** signal to the receiver, tuning the station selector to a dial reading of **1720** and adjusting the trimmers C-47, C-12 and C-3 to produce maximum receiver output. The Oscillator should then be shifted to **600 kc.** and the receiver tuned to resonate this signal, disregarding the reading at which it is best received. Trimmer C-46 must then be adjusted, simultaneously while rocking the station selector backward and forward through the signal until the maximum output results from the combined operations. C-47 should be rechecked to assure that its adjustment has not changed because of the trimming of C-46.

Band X—Change the range switch to its Band "X" position. Tune the receiver to read **400 kc.** and set the Oscillator to **400 kc.** Adjust trimmers C-45, C-11 and C-2 to produce maximum receiver output. Then shift the Oscillator frequency to **150 kc.** and tune the receiver to pick up this signal, disregarding the dial reading at which it is best received. Then tune the oscillator series trimmer, C-61, simultaneously rocking the tuning control (receiver) backward and forward through the signal, until maximum output results from the combined operations. Repeat the alignment of C-45 as in (a) to correct for any change caused by the adjustment of C-61.

Band C—Change the receiver so that it is operative and the dial reads **18,000 kc.** on the "C" Band. Tune the test Oscillator to this same frequency. Then adjust the oscillator trimmer C-43 to produce maximum (peak) output. Two positions of this trimmer will be found which conform with this requirement. The one of least capacitance is correct. Check for the presence of "image" response at **17,080 kc.** by shifting the receiver tuning. If it is received at such a point, the trimmer C-43 has been correctly adjusted to the right peak. *No adjustments are to be made during this check.* Tune the receiver back to the **18,000 kc.** dial marking, readjust C-43 if necessary, and then tune the detector and antenna capacitors C-10 and C-1 for maximum receiver output. No further adjustments are necessary.

Radiotron Socket Voltages

The voltage values indicated from the Radiotron socket contacts to chassis on Figure 6 will serve to assist in the location of causes for faulty operation. Each value as specified should hold within ± 20% when the receiver is normally operative at its rated supply voltage. Variations in excess of this limit will usually be indicative of trouble in the basic circuits. The voltages given are actual operating values and do not allow for inaccuracies which may be caused by the loading effect of a voltmeter's internal resistance.

Standard Transformer

The transformer used on some models of this instrument is adaptable for voltages and frequencies as given under Ratings A and B of Electrical Specifications. Its schematic and wiring are shown by Figure 7.

Phonograph Attachment

A terminal board is provided for connecting a phonograph attachment into the audio amplifying circuit. Two typical methods of connection are shown on the schematic diagram Figure 1. The radio volume control must be set to minimum when using phonograph.

RADIOTRON COMPLEMENT

(1) RCA-6K7.....Radio-Frequency Amplifier
(2) RCA-6L7.....First Detector
(3) RCA-6J7.....Heterodyne Oscillator
(4) RCA-6K7.....Intermediate Amplifier
(5) RCA-6H6.....Second Detector and A.V.C.

(6) RCA-6C5.....First Audio Amplifier
(7) RCA-6C5.....Audio Driver Amplifier
(8) RCA-6F6.....Power Output Amplifier
(9) RCA-6F6.....Power Output Amplifier
(10) RCA-5Z3.....Full-Wave Rectifier
(11) RCA-6E5.....Tuning Indicator

REPLACEMENT PARTS

Insist on genuine factory tested parts, which are readily identified and may be purchased from authorized dealers

Stock No.	Description	List Price
	RECEIVER ASSEMBLIES	
4632	Board—Terminal board assembly—two terminals	$0.25
4427	Bracket—Volume control mounting bracket	.18
5237	Bushing—Variable tuning condenser mounting bushing assembly—comprising one bushing, one washer, one lock-washer and one nut—Package of 3	.43
11223	Capacitor—Adjustable capacitor (C46)	.46
5241	Capacitor—Adjustable capacitor (C61)	.40
11292	Capacitor—22 MMfd. (C9)	.24
11289	Capacitor—50 MMfd. (C8)	.26
11291	Capacitor—115 MMfd. (C30)	.24
11290	Capacitor—400 MMfd. (C60)	.25
11269	Capacitor—800 MMfd. (C59)	.30
3784	Capacitor—900 MMfd. (C31)	.30
11316	Capacitor—1225 MMfd. (C26)	.40
11287	Capacitor—4500 MMfd. (C58)	.30
5107	Capacitor—.0025 Mfd. (C62, C63)	.16
4838	Capacitor—.003 Mfd. (C40, C41)	.20
4868	Capacitor—.005 Mfd. (C33)	.20
4624	Capacitor—.01 Mfd. (C30)	.54
4937	Capacitor—.01 Mfd. (C39)	.25
11315	Capacitor—.015 Mfd. (C38)	.20
4836	Capacitor—.05 Mfd. (C4, C13, C18, C23)	.30
4886	Capacitor—.05 Mfd. (C24)	.20
4839	Capacitor—0.1 Mfd. (C7, C19, C27, C52)	.28
4841	Capacitor—0.1 Mfd. (C6)	.22
5170	Capacitor—0.25 Mfd. (C32)	.25
8041	Plate—I. F. or R. F. coil shield locking plate—Package of 2	.12
11220	Resistor—Voltage divider resistor—Comprising one 3900 ohm and one 4200 ohm sections (R31, R32)	.84
11221	Resistor—Voltage divider resistor—Comprising one 50 ohm, one 28 ohm and one 193 ohm sections (R28, R29, R30)	.48
5112	Resistor—1000 ohm—Carbon type—¼ watt (R2)—Package of 5	1.00
3706	Resistor—1800 ohm—Carbon type—¼ watt (R15)—Package of 5	1.00
5139	Resistor—2200 ohm—Carbon type—¼ watt (R20)—Package of 5	1.00
5175	Resistor—5600 ohm—Carbon type—½ watt (R21)—Package of 5	1.00
2731	Resistor—10,000 ohm—Carbon type—1 watt (R25)—Package of 5	1.10
11305	Resistor—22,000 ohm—Carbon type—¼ watt (R16, R17)—Package of 5	1.00
5033	Resistor—33,000 ohm—Carbon type—1 watt (R23)—Package of 5	1.10
11300	Resistor—33,000 ohm—Carbon type—1/10 watt (R24)—Package of 5	.75
3118	Resistor—100,000 ohm—Carbon type—¼ watt (R1, R3, R5, R6)—Package of 5	1.00
5027	Resistor—150,000 ohm—Carbon type—½ watt (R19)—Package of 5	1.00
11626	Resistor—2.2 megohms—Carbon type—¼ watt (R9, R10, R11)—Package of 5	1.00
5249	Shield—Antenna, detector, or oscillator coil shield	.20
5250	Shield—Intermediate frequency transformer shield	.22
11222	Socket—Dial lamp socket	.18
4794	Socket—4-contact rectifier Radiotron socket	.15
11197	Socket—6-contact Radiotron socket	.14
11198	Socket—7-contact Radiotron socket	.15
11756	Switch—Range switch (S1, S2, S3, S4, S5, S6, S7, S8, S9, S10)	2.44
5224	Switch—Low frequency tone control and power switch (S11, S13)	1.00
5238	Terminal—Antenna terminal board with clip, insulating strip and rivets	.14
11219	Tone Control—High frequency tone control (R22)	.90
11218	Transformer—Audio driver transformer (T2)	2.58
11216	Transformer—First intermediate frequency transformer (L16, L17, C16, C17)	2.15
11217	Transformer—Second intermediate frequency transformer (L18, L19, C20, C21, C22, R7, R8)	3.10
11212	Transformer—Power transformer—105-125 volts—25-50 cycles	7.18
11213	Transformer—Power transformer—250-210-150-125-105 volts—40-60 cycles (T1)	9.10
11205	Volume Control—(R14)	1.30
	DRIVE ASSEMBLIES	
4362	Arm—Band indicator operating arm	.28
10194	Ball—Steel ball—Package of 20	.25
4422	Clutch—Tuning condenser drive clutch assembly—Comprising drive shaft, balls, ring, spring and washers, assembled	1.00
11333	Dial—Station selector dial scale	.60
11227	Drive—Variable tuning condenser drive complete—less dial scale	2.08
11228	Gear—Vernier pointer drive gear	.42
4827	Gear—Spring gear assembly—complete—comprising stud, spring, cover, gears, mounting arm with screws and washers	1.25
11203	Capacitor—10 Mfd. (C53)	1.18
5212	Capacitor—18 Mfd. (C54)	1.16
11215	Capacitor pack—Comprising one 16 Mfd., two 10 Mfd., and two 8 Mfd. capacitors (C29, C35, C36, C55, C56)	3.85
4693	Clamp—Electrolytic condenser mounting clamp—for stock No. 11215	.15
11325	Coil—Antenna coil—X band (L3, L4, C2)	1.56
11326	Coil—Detector coil—X band (L9, L10, C11)	1.60
11327	Coil—Oscillator coil—X band (L14, L23, C45)	1.44
5215	Coil—Antenna coil—A and C bands (L1, L2, L5, L6, C1, C3)	2.32
5216	Coil—Detector coil—A and C bands (L7, L8, L11, L12, C10, C12)	2.34
5217	Coil—Oscillator coil—A and C bands (L13, L15, C43, C47)	2.20
11277	Compensating Pack—Comprising one 8200 ohm and one 27,000 ohm resistors, one .015 Mfd., one .035 Mfd. capacitors (C25, C28, R12, R13)	.92
11214	Condenser—Three-gang variable tuning condenser (C5, C14, C48)	4.20
11697	Cover—Terminal board cover	.12
11202	Foot—Chassis foot and bracket assembly—Package of 2	.78
11710	Lead—Shielded lead—connects antenna terminal to range switch	.40
11303	Indicator—Station selector vernier indicator pointer	.22
11226	Indicator—Band indicator pointer assembly—comprising indicator, arm, link and stud	.20
4475	Indicator—Station selector indicator	.18
4340	Lamp—Dial lamp—Package of 5	.60
3993	Screw—No. 6-32-5/32-in. set screw for band indicator operating arm—Package of 10	.25
4669	Screw—No. 8-32-5/32-in. square head set screw—for tuning condenser shaft—Package of 10	.25
4377	Spring—Band indicator operating arm spring—Package of 5	.25
4378	Stud—Band indicator operating arm stud assembly—Package of 5	.25
	REPRODUCER ASSEMBLIES	
11232	Board—Terminal board with two lead wire clips	.18
11231	Bolt—Yoke and core assembly bolt and nut	.16
8060	Bracket—Mounting bracket for output transformer and connector	.14
11304	Cable—Reproducer cable—Complete with female connector	.80
11257	Clamp—Cone center suspension clamping nut and screw assembly—Package of 5	.25
11234	Coil—Field coil (L22)	2.15
11233	Coil—Neutralizing coil	.30
11235	Cone—Reproducer cone (L21)—Package of 5	3.50
5040	Connector—4 contact female connector socket for reproducer cable	.25
5039	Connector—4 prong male connector plug for reproducer	.25
9617	Reproducer—Complete	6.60
11228	Transformer—Output transformer (T3)	1.66
11230	Washer—Binders board "C" washer—used to hold field coil securely—Package of 5	.18
	MISCELLANEOUS ASSEMBLIES	
11729	Bolt—Reproducer mounting bolt assembly—Comprising one bolt, one washer, one lockwasher and one nut—Package of 2	.20
11191	Bracket—Tuning lamp mounting bracket—less clamp	.12
11319	Cable—Tuning tube cable—complete with socket	1.38
11192	Clamp—Tuning lamp mounting clamp—less bracket	.12
11276	Escutcheon—Tuning lamp escutcheon	.40
11337	Escutcheon—Station selector escutcheon	.70
6614	Glass—Station selector dial glass	.30
11347	Knob—Volume control, tone control, range switch or power switch knob—Package of 5	.75
11346	Knob—Station selector knob—Package of 5	.75
11382	Resistor—1 megohm—Carbon type—1/10 watt (R27)—Package of 5	.75
4678	Ring—Spring retaining ring for station selector dial glass—Package of 5	.34
11377	Screw—Chassis mounting screw assembly—Comprising one screw, one washer and one lockwasher—Package of 4	.12
11348	Screw—No. 8-32—1/16-in. headless cupped point set screw for knob (Stock No. 11346)—Package of 10	.32
11381	Socket—Tuning tube socket and cover	.45
11349	Spring—Retaining spring for knob (Stock No. 11347)—Package of 5	.15

The prices quoted above are subject to change without notice.

©John F. Rider, Publisher

©John F. Rider, Publisher

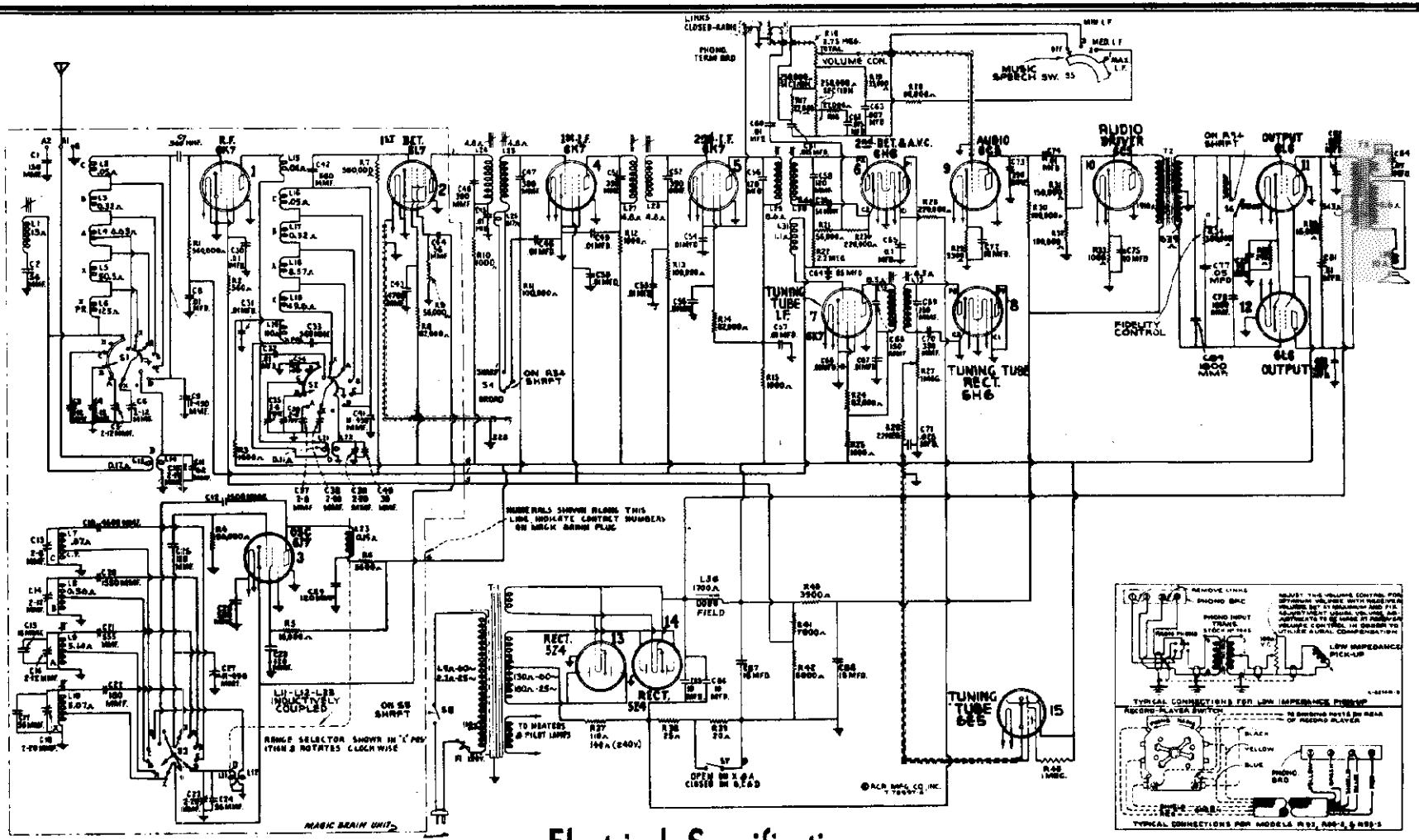

Electrical Specifications

FREQUENCY RANGES

"Long Wave" (X)	150-410 kc
"Standard Broadcast" (A)	530-1,800 kc
"Medium Wave" (B)	1,800-6,400 kc
"Short Wave" (C)	6,400-23,000 kc
"Ultra Short Wave" (D)	23,000-60,000 kc

ALIGNMENT FREQUENCIES

"Long Wave" (X)	175 kc (osc.), 350 kc (osc., det., ant.)
"Standard Broadcast" (A)	600 kc (osc.), 1,500 kc (osc., det., ant.)
"Medium Wave" (B)	6,000 kc (osc., det., ant.)
"Short Wave" (C)	20,000 kc (osc., det., ant.)
"Ultra Short Wave" (D)	57,000 kc (osc., det., ant.)
Intermediate Frequency	460 kc

MODEL 15K
Chassis Wiring

RCA MFG. CO., INC.

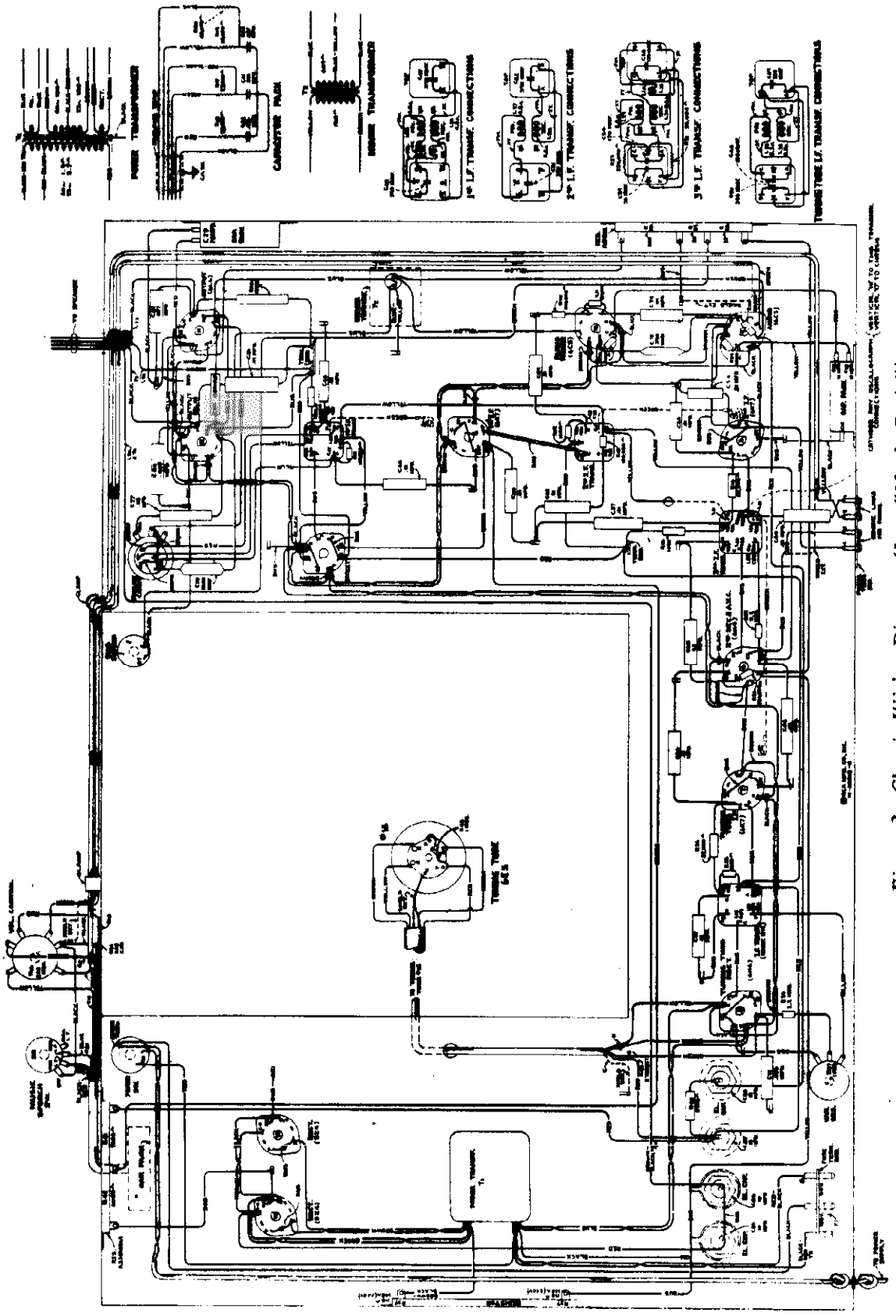

Figure 3—Chassis Wiring Diagram (Less "Magic Brain")

POWER SUPPLY RATINGS

Rating A ..... 105-125 volts, 50-60 cycles, 165 watts
Rating B ..... 105-125 volts, 25-60 cycles, 165 watts
Rating C ..... 100-130/140-160/195-250 volts, 40-60 cycles, 165 watts

©John F. Rider, Publisher

RCA MFG. CO., INC.

MODEL 15K
"Magic Brain"
Chassis Wiring

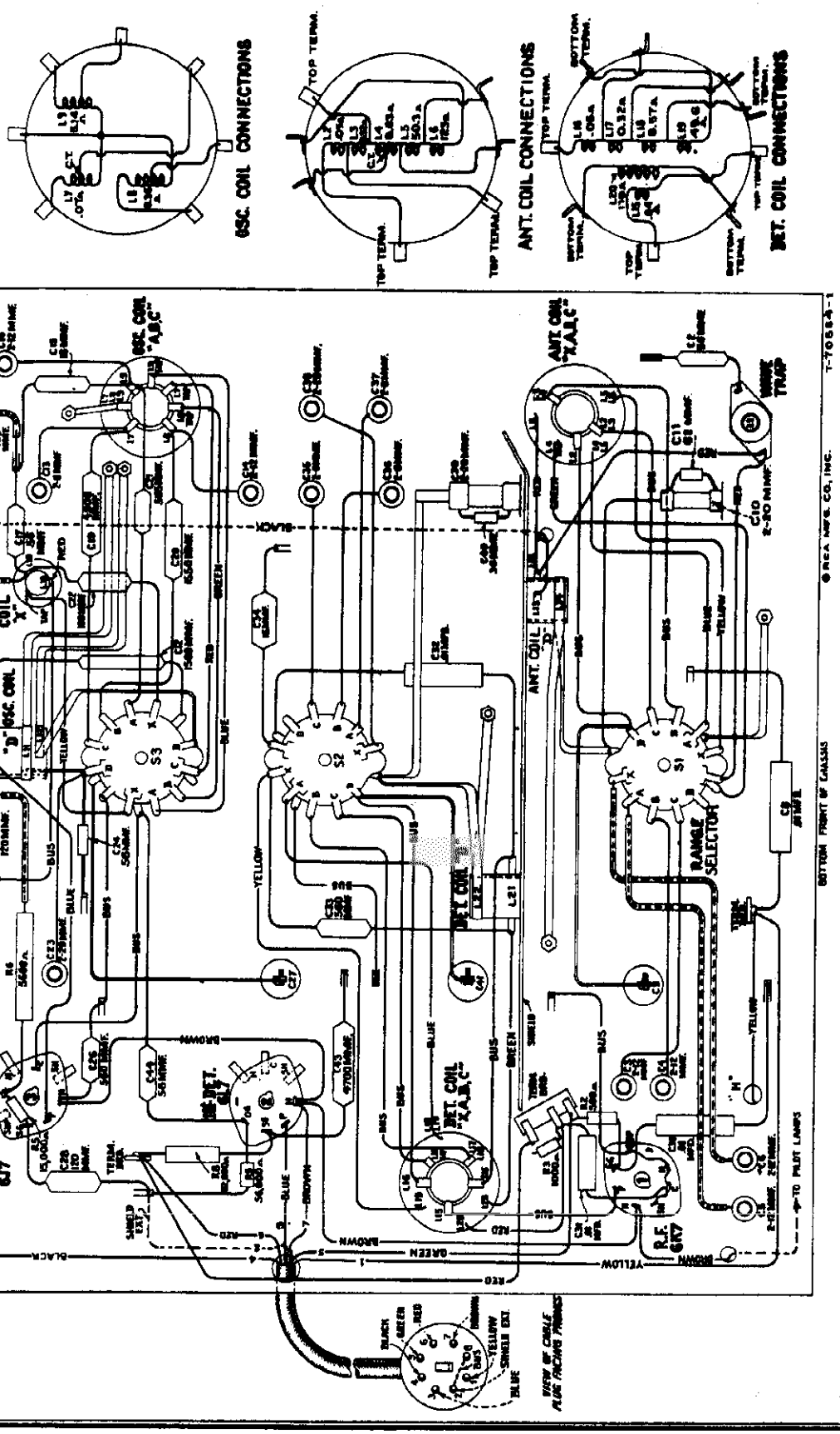

Figure 4—"Magic Brain" Wiring Diagram

POWER OUTPUT
Undistorted ..... 20 watts
Maximum ..... 30 watts

LOUDSPEAKER
Type ..... Electrodynamic
Impedance (v.c.) ..... 11¼ ohms at 400 cycles

©John F. Rider, Publisher

MODEL 15K
Resistance,

RCA MFG. CO., INC.

Voltage

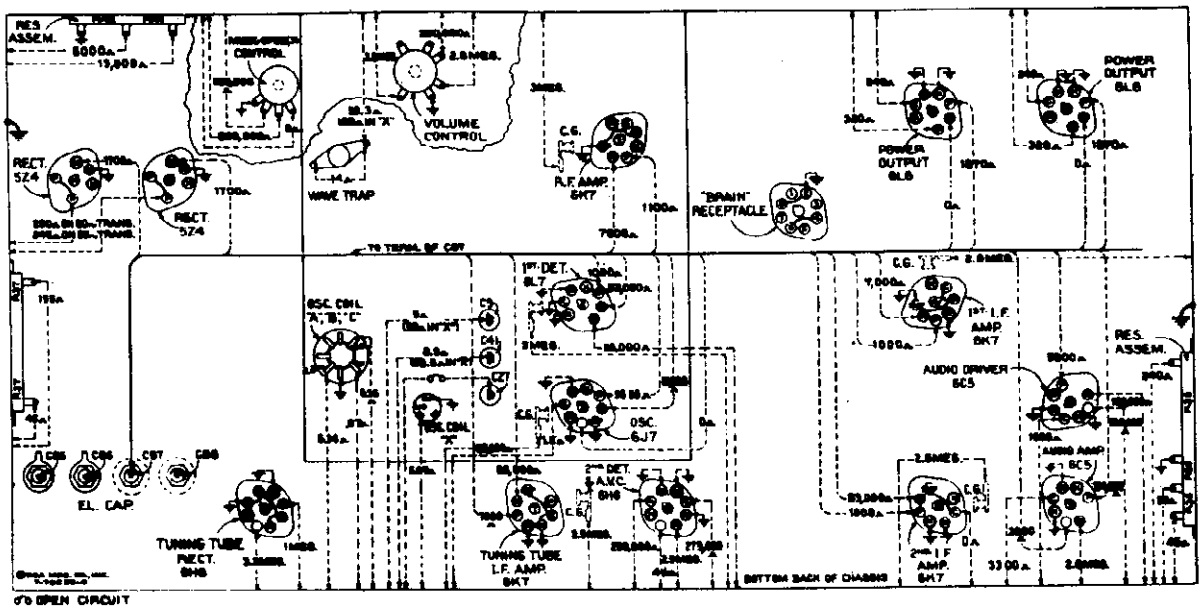

Figure 9—Resistance Diagram

Power supply disconnected—Radiotrons in sockets—Tuning condenser in full-mesh—Range selector in "Standard broadcast" position—Volume control maximum—Fidelity control optional—Music-speech Control Clockwise

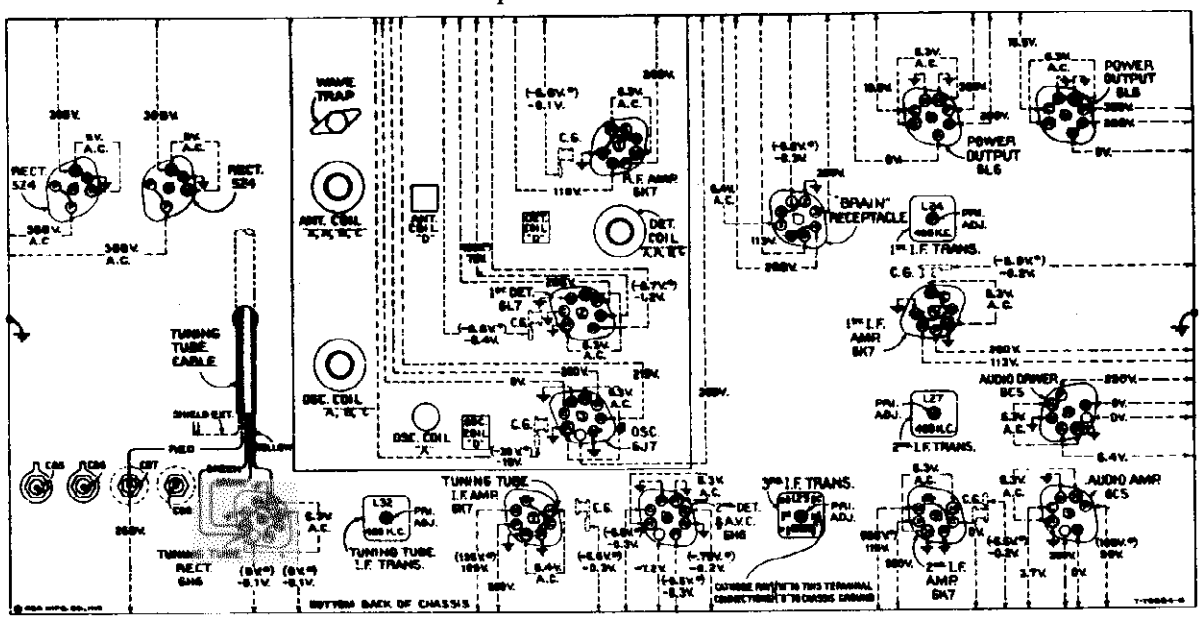

Figure 10—Radiotron Socket Voltages, Coil, and I-F Trimmer Locations

Measured at 115 volts, 60-cycle supply—Tuned to approximately 1,000 kc—No signal being received—Volume control minimum—Fidelity control optional

Note: Two voltage values are shown for some readings. The value shown in parentheses with asterisk (*) indicates operating conditions without voltmeter loading. The other value (generally lower) is the actual measured voltage and differs from the value shown in parentheses because of the additional loading of the voltmeter through the high series circuit resistance.

Radiotron Cathode Current Readings

Measured with Milliammeter Connected at Tube Socket Cathode Terminals under Conditions Similar to Those of Voltage Measurements

(1)	RCA-6K7—R-F Amp.	6.2 ma.
(2)	RCA-6L7—1st Det.	4.0 ma.
(3)	RCA-6J7—Osc.	6.6 ma.
(4)	RCA-6K7—1st I-F Amp.	6.2 ma.
(5)	RCA-6K7—2nd I-F Amp.	7.5 ma.
(6)	RCA-6H6 2nd Det.—A.V.C.	—
(7)	RCA-6K7—Tuning Tube I-F Amp.	7.5 ma.
(8)	RCA-6H6—Tuning Tube Rect.	—
(9)	RCA-6C5—Audio Voltage Amp.	1.25 ma.
(10)	RCA-6C5—Audio Driver Amp.	6.4 ma.
(11)	RCA-6L6—Power Output	43.0 ma.
(12)	RCA-6L6—Power Output	43.0 ma.
(13)	RCA-5Z4—Rectifier	80 ma.*
(14)	RCA-5Z4—Rectifier	80 ma.*
(15)	RCA-6E5—Tuning Tube	3.0 ma.

(*Cannot be measured at socket)

©John F. Rider, Publisher

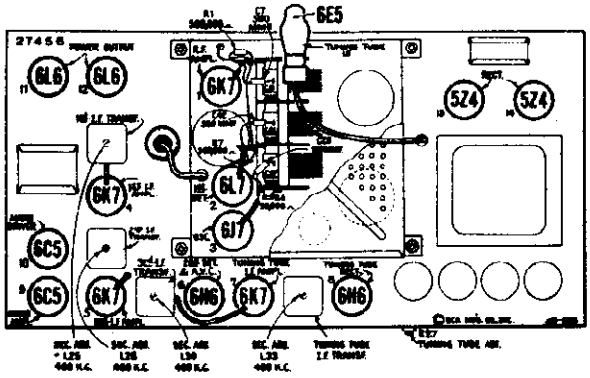

Figure 1—Radiotron and I-F Trimmer Locations

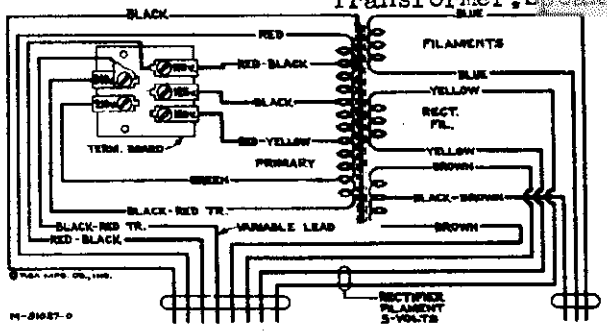

Primary resistance—3.6 ohms total
Secondary resistance—112 ohms total

Figure 8—Universal Transformer

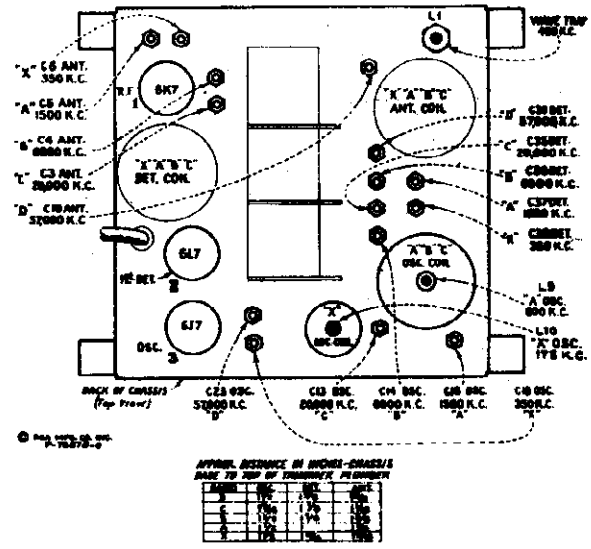

Figure 7—"Magic Brain" Trimmer Locations

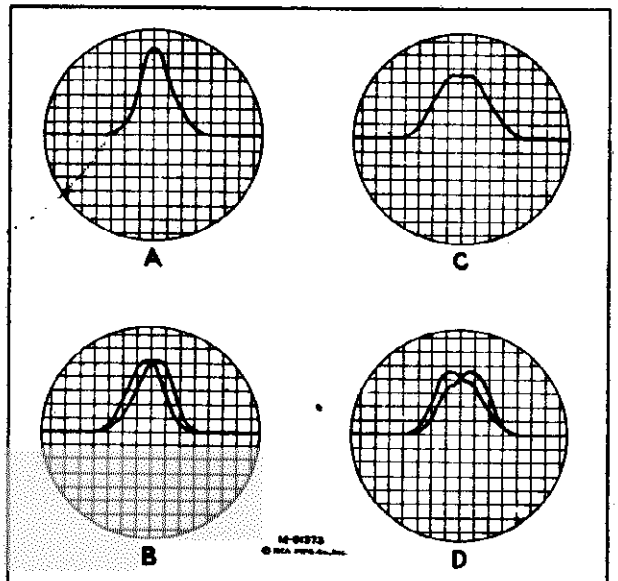

Figure 6—I-F Alignment Oscillograph Curves

A—Correct curve showing proper i-f alignment as obtained with fidelity control counter-clockwise.

B—Incorrect curve similar to A showing improper alignment of i-f system caused by one or more circuits being slightly detuned.

C—Correct showing broadening of curve A obtained when fidelity control is rotated fully clockwise.

D—Incorrect curve showing broadening of curve B obtained when fidelity control is rotated fully clockwise.

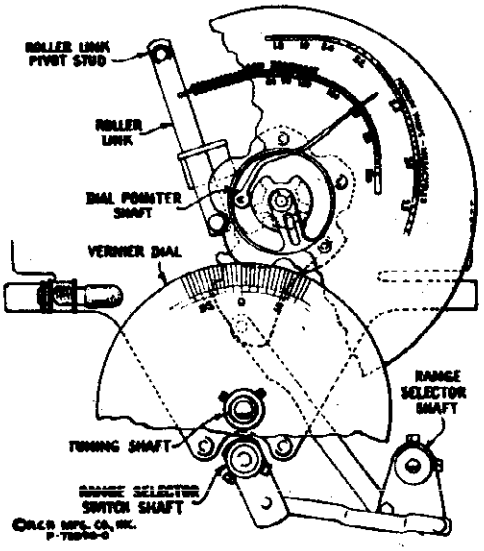

Figure 12—Selector Dial Change Mechanism

NOTE: For Fig.5 Alignment Apparatus Connections, refer to Fig. 4 of Model 9K.

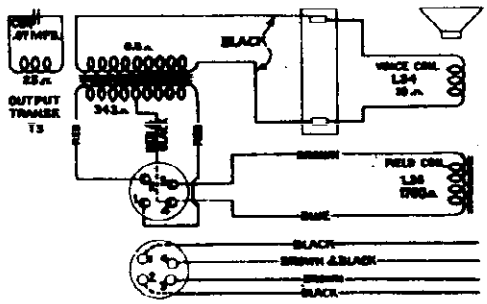

Figure 11—Loudspeaker Wiring

©John F. Rider, Publisher

MODEL 15K
Circuit Data
Alignment,Part 1

RCA MFG. CO., INC.

General Description

This receiver represents the result of thorough development, design, and mechanical manufacture. Noteworthy technical improvements have been applied in achieving marked advantages of operation, and efficiency of performance.

Model 15K is a fifteen-tube, console-type, "Magic Brain" superheterodyne receiver with a twelve-inch electro-dynamic loudspeaker, and the newly developed "Magic Voice." Design features incorporated in this receiver include built-in doublet antenna system; "Magic Brain"; improved plunger-type air-dielectric adjustable trimming capacitors in the antenna, detector, and oscillator coil circuits; tuned r-f amplifier; high-efficiency first detector (converter) with separate oscillator; two-stage i-f amplifier; selective "Magic Eye"; push-pull beam-type power amplifier; magnetite core adjusted i-f transformers, low-frequency oscillator tracking, and wave-trap; range-selector sensitivity control; fidelity control; "Magic Voice"; three-point tonal compensated volume control; music-speech switch; automatic volume control; phonograph terminal board; new selector dial; and a dust-proof aluminum voice-coil, electrodynamic loudspeaker.

Service convenience has been a controlling factor in the layout of the chassis parts and wiring. The assembly of these various elements is such that the number of conductors is minimized, with all important connections being readily accessible. Trimming adjustments are located at accessible points. A double tuning-knob arrangement permits the choice of either a twenty-to-one or a hundred-to-one dial drive ratio. The latter permits ease of tuning, especially in the "Medium wave", "Short wave", and "Ultra short wave" bands.

Circuit Arrangement

The conventional type of superheterodyne circuit is used. It consists of an r-f amplifier stage, first detector (converter) stage, separate oscillator stage, two signal i-f amplifier stages, tuning tube i-f amplifier and rectifier stages, a diode-detector—automatic volume-control stage, an audio voltage-amplifier stage, an audio driver-amplifier stage, a push-pull beam-type power-amplifier stage, a tuning indicator "Magic Eye", and a full-wave rectifier.

"Magic Brain"

The new "Magic Brain" is enumerated as a separate, self-contained, completely shielded, five-band, oscillator- detector- antenna-tuning unit which plugs into the main chassis.

A single-wire antenna, or a doublet antenna, when connected to the proper input terminals of the receiver, is coupled to the control grid of the RCA-6K7 r-f amplifier tube through the tuned r-f transformer consisting of L4, L5, L6, L7, and L8 (except when range selector is in "Ultra short wave" position). The primary coil L13 of the "Ultra short wave" (D) band tuned r-f transformer remains in the antenna circuit at all times. A unique method of switching is used. In the "Long wave" (X) band, L4 becomes the primary with L5, L6, L7, and L8 as secondary. In the "Standard broadcast" (A) band, L5 becomes the primary with L4, L7, and L8 as secondary (L6 shorted out). In the "Medium wave" (B) band, L4 becomes the primary with L5 and L8 as secondary (L6 and L7 shorted out). In the "Short wave" (C) band, L5 becomes the primary with L8 as secondary (L4, L6, L7, and tap on L4 shorted out). The tap on L4 is provided to prevent interaction with L3 and L2 when operating receiver in "Short wave" band. In the "Ultra short wave" (D) band, L4, L5, L6, and L7 are shorted out and grounded, and secondary L14 is placed in shunt with L3. The latter connection prevents undesirable interaction of L2 with L14. This method of switching reduces the total number of coils and leads, and results in having a low-loss primary and secondary winding for each band with high efficiency of operation.

The band switching of the detector circuits is similar to that of the antenna circuits. Coils L13, L21, and L20 are always connected in series with the plate circuit of the RCA-6K7 r-f amplifier tube. In the "Long wave" (X) band, L19, L18, L17, and L16 are connected in series as the secondary circuit. The ground of the coil system is at the low end of L19. L20 acts as the primary which transfers energy to the secondary L19. Capacitor C33 resonates primary L20 at the proper frequency. In the "Standard broadcast" (A) band, L18, L17, and L16 are connected in series as the secondary circuit. The ground of the coil system is now between L18 and L19. L19 is used as the primary and is resonated at the proper frequency by capacitors C34 and C33 which are in shunt with this coil. Capacitor C33 is connected to transfer energy to the primary coil L19. In the "Medium wave" (B) band, L17 and L16 are connected in series as the secondary. The ground of the coil system is now between L16 and L17. L17 is used as the primary and is resonated to the proper frequency by capacitor C34. In addition, L15 acts as a high-frequency primary which resonates above 30 mc and improves the gain at the high-frequency end of the "Short wave" band. Coils L19 and L18 are shorted by the range selector. L21 is effectively r-f bypassed in this position by capacitor C32. In the "Ultra short wave" (D) band, L22 is the secondary, or grid coil, and consists of approximately a single turn of silver plated strap around a 7/8-inch coil form. The primary coils, L21 and L13 are in series on this band, with L21 acting as a low-frequency primary and L13 as a high-frequency primary. L16 is shunted by L22 instead of being shorted directly by the range selector. Any inductive effect of L16 is thus eliminated. L19, L18, and L17 are shorted directly by the range selector.

Separate windings, with the exception of L21, are employed in the oscillator stage for each position of the range selector. L23 (inductively coupled to L21 and L13) is placed in the oscillator plate circuit to provide additional feed-back when operating receiver on the "Ultra short wave" (D) band. This coil is effectively r-f bypassed by capacitor C12, when range selector is in the "Short wave" (C) position, to prevent undesirable reactions. Its effect on the remaining bands is negligible. The inherent stability of the oscillator circuit provides minimum frequency drift which is especially advantageous for high-frequency reception. The locally generated signal is capacitance coupled to grid No. 1 of the RCA-6L7 first detector.

The output of the "Magic Brain" is fed to the i-f amplifier through a plug-in cable. This cable also supplies all power required by the "Magic Brain" unit.

I-F Amplifier (Signal)

The intermediate-frequency amplifier consists of two RCA-6K7 tubes in a two-stage, transformer-coupled circuit. The windings of all three i-f transformers are resonated by fixed capacitors, and are adjusted by molded magnetite cores (both primary and secondary) to tune to 460 kc. A third winding L26, in the first i-f transformer, is placed in series with the main secondary L25 when the fidelity control switch S4 is thrown to "broad" position (see figure 2), thereby increasing the coupling between the primary and secondary circuits with consequent broadening of the band width of the i-f amplifier. The increased band width of the i-f amplifier therefore results in less attenuation of the higher audio modulation side-band frequencies, permitting higher fidelity reception. A third winding L31 in the third i-f transformer supplies signal input to the tuning tube i-f amplifier.

Tuning Tube I-F Amplifier

The i-f signal voltage developed in L31 (third i-f transformer) is applied to the control grid of the RCA-6K7 tuning tube i-f amplifier. The output of this tube is coupled through a sharply tuned transformer to the RCA-6H6 tuning tube rectifier. All or a portion of the voltage which develops across resistor R27 (adjustable from back of chassis, see figure 1) is transferred from the movable arm to the grid of the RCA-6E5 cathode-ray tuning tube through a variable resistance-capacitance filter. The sharpness of this amplifier permits the receiver to be momentarily tuned to the incoming carrier with the tuning tube "Magic Eye" while operating receiver with the fidelity control in extreme clockwise (broad) position.

Detector and A. V. C.

The modulated signal, as developed from the output of the last i-f stage, is detected by an RCA-6H6 twin-diode tube (No. 2 diode). The audio frequency secured by this process is transferred to the r-f system for amplification and final reproduction. The d-c voltage which results from detection of the signal is used for automatic volume control. This voltage, which develops across resistors R21 and R31, is applied, as automatic control grid bias to the r-f, first-detector, and i-f tubes. The No. 1 diode of the RCA-6H6 is used to supply residual bias to the cathode of the tuning tubes at all times or set signal. This diode, under such conditions, draws current which flows through resistors R31, R32, and R33, thereby maintaining the desired operating bias on such tubes. On application of signal energy above a certain level, however, the resistance of diode increases to such an extent that the d-c diode current flowing becomes less than the bleeder current. The sensitivity of the receiver is increased in the "Ultra short wave" (D), "Short wave" (C), and "Medium wave" (B) bands by removing the resistor bias on the above mentioned ranges. This switching operation is operated by the range selector control.

Audio System

The manual volume control consists of an acoustically tapered potentiometer in the audio circuit between the output of the detector-diode and the input grid of the RCA-6C5 audio voltage-amplifier tube. The control has a three-point tone-compensating filter connected to it so that the correct aural balance will be obtained at different volume settings. Phonograph terminals are provided to feed the output of an external phonograph pickup to the control grid of the audio amplifier through this aurally compensated volume control.

The output of the voltage amplifier is resistance-capacitance coupled to the control grid of the RCA-6C5 driver tube. The output of this stage is transformer coupled to the control grids of the RCA-6L6 push-pull power output tubes. The output of this stage is transformer coupled to the voice coil of the electro-dynamic speaker.

The "Music-speech" control consists of a switch S7 which is connected to two of the tones compensating filters. When this control is turned to its No. 1 (Music) position, maximum low audio-frequency response is obtained. When the control is turned to its No. 2 position, resistor R20 is placed in shunt with capacitor C61, giving greater attenuation of the lower frequencies. This position is a compromise between the "Music" and the "Speech" positions. In the No. 3 (Speech) position, operation is the same as No. 2 position except that capacitor C61 is shorted, giving additional low-frequency attenuation (maximum tone).

Fidelity Control

The fidelity control consists essentially of the combination of a conventional high audio-frequency tone control, including the combination of capacitor C77 and a variable resistor R34, capacitor C78 and switch S6 in shunt with the secondary winding of transformer T3, and means for changing the band width of the i-f amplifier. It performs in the following manner:

When the fidelity control is in its extreme counter-clockwise (sharp) position, resistor R34 is at maximum, capacitor C78 shunts the secondary of T3, and winding L26 is disconnected from the r-f circuit (S6 and S4 in sharp position, see figure 2). Capacitor C77 is most effective at this point causing maximum attenuation of the higher audio frequencies. As this control is turned clockwise, placing more resistance in series with capacitor C77, the capacitor becomes less and less effective, and the upper frequency range of the audio amplifier is extended. When the fidelity control nears its extreme clockwise position, resistor R34 is disconnected and switches S6 and S4 (operated by fidelity control shaft) respectively disconnect capacitor C78 from the audio circuit and place winding L26 (first i-f transformer) in series with L25 (S6 and S4 in broad position) thereby increasing the higher audio-frequency range of the audio amplifier and broadening the i-f amplifier simultaneously.

Selective "Magic Eye"

An RCA-6E5 cathode-ray tuning tube is used as a means of visually indicating when the receiver is accurately tuned to the incoming signal. This tube consists of an amplifier section and a cathode-ray section built in the same glass envelope. The adjustable area of R27 selects the voltage to be applied across the grid of the amplifier section. Maximum voltage is applied to this grid when the receiver is tuned to resonance with an incoming carrier. This condition is evidenced by minimum width of the dark sector on the fluorescent screen.

"Magic Voice"

This receiver is designed with a cabinet incorporating the "Magic Voice." This is accomplished by having the rear of the speaker compartment completely enclosed by a tight-fitting back.

Five metal open-end pipes of equal diameter but of three different lengths are inserted in holes in the cabinet base and extend upward in the speaker compartment. The effect is to cause the lower-frequency waves, reaching the front of the cabinet through the pipes, to arrive approximately in-phase with the sound waves emitted from the front of the speaker giving extended low-frequency response without boominess, or cabinet resonance.

SERVICE DATA

The various diagrams in this booklet contain such information as will be needed to locate causes for defective operation if such develops. The values of the various resistors, capacitors, coils, etc., are indicated adjacent to the symbols signifying these parts on the diagram. Identification data, such as C1, L2, R1, etc., are provided for reference between the illustrations and the Replacement Parts List. The coils, resistors, and transformer windings are noted in terms of their d-c resistance only. Resistance values of less than one ohm are generally omitted.

Alignment Procedure

There are seventeen adjustments required for the alignment of the oscillator, first-detector, and antenna-tuned circuits; one adjustment for the wave-trap; and eight adjustments for the i-f system. Fifteen of these adjustments are made with plunger-type air trimming capacitors and require the use of an RCA Stock No. 12858 Adjusting Tool. Each of these capacitors has a lock nut for securing the plunger in place after adjustment. The remaining eleven adjustments are made by means of screws attached to molded fiber-plastic cores. These cores change the inductance of the particular coils in which they are inserted to provide exact alignment. All of these adjustments are accurately made during manufacture and should remain in proper alignment unless affected by abnormal conditions of climate or purposeful interference for servicing, or unless altered by other means. Loss of sensitivity, improper tone quality, and poor selectivity are the usual indications of improper alignment. Such conditions will usually exist simultaneously. Correct performance of this receiver can only be obtained when these adjustments have been made by a skilled service engineer with the use of adequate and reliable test equipment. The manufacturer of this receiver has such test equipment available for sale through its distributors and dealers.

The extensive frequency range of this receiver necessitates a more or less involved method of alignment. However, if the following directions are carefully applied in the sequence given, normal performance of the instrument will be obtained.

The plunger-type air trimming capacitors have their approximate plunger settings tabulated on figure 7. If the plungers have been disturbed from their original adjustments, they may be roughly set to the specified dimensions prior to alignment.

In performing service on the "Magic Brain", the leads should be restored to their original positions, since the lead-dress is important for proper operation and dial calibration.

Preparatory Drawing of Leads for "Magic Brain" Alignment

(Refer to Figure 4)

Band "X"

1. Keep blue lead A of S1 to antenna coil L4-5 ground away from chassis, and from yellow lead X of S1 to antenna coil L4-5.
2. Bare lead from C78 to S1 should be as short as possible.
3. Keep blue lead A of S2 to detector coil L16-19 clear of chassis, coil shield, coil, and other leads.
4. Keep spaghetti lead C6 to X of S1 away from spaghetti lead C5 to A of S1, and from chassis.

Band "A"

1. Keep green lead terminal S1 to antenna coil tap L4 away from chassis, coil shield, and coil.
2. Keep spaghetti lead C5 to A of S1 away from spaghetti lead C6 to X of S1 and from chassis.

Band "C"

Lead from C19 to oscillator coil L7 should be maintained as short and straight as possible.

For alignment, the test-oscillator frequency should be quite accurate. A convenient and reliable means of accurately checking the frequency of test oscillators, receivers, etc., is the RCA Stock No. 9972 Crystal Calibrator.

If the test-oscillator signal cannot be heard as the receiver (heterodyne) oscillator air-trimmer plunger is changed from its minimum-capacity to maximum-capacity position (receiver dial and test oscillator set on the specified frequencies, and the correct oscillator air-trimmer used) it may be an indication that the test-oscillator frequency is outside the range covered by the air-trimmer. Under such conditions, when a more accurate setting of the test oscillator cannot be determined, set the oscillator air-trimmer plungers to the approximate values given on figure 7. Tune the test oscillator until the signal is heard in the speaker. Each of two test-oscillator settings (the fundamental or the harmonics of which are 920 kc apart) produce a signal. The lower-frequency test-oscillator setting should be used as this places the test-oscillator (signal) frequency 460 kc below the frequency of the receiver heterodyne oscillator.

Holes are provided in the top of the r-f and antenna coil cans on some models to enable a tuning check with the RCA Stock No. 6070 Tuning Wand. The hole in the top of the detector coil can has a cloth button which must be removed before insertion of the tuning wand. When the brass end of the wand is inserted in the coil, the inductance of the coil is decreased. If this results in an increase of output, the respective air-trimmer capacitance should be decreased (plunger pulled out). If inserting the iron end of the tuning wand causes an increase in output, resulting from an increase of inductance of the coil, the respective air-trimmer capacitance should be increased (plunger pushed in). If the range of the air trimmer is not sufficient to give the desired results, the lead-dress may be changed in the particular circuit being aligned, so as to cause the circuit to resonate within the range of the trimmer. An increase in the capacity-to-ground of the circuit will be required if the iron end of the tuning wand causes an increase of signal output when the air-trimmer plunger is full-in, while a decrease in the capacity-to-ground will be required if the brass end of the tuning wand causes an increase in signal output when the air-trimmer plunger is full-out.

Two methods of alignment are applicable—one requires use of the cathode-ray oscillograph, and the other requires a voltmeter or glow-type indicator. The cathode-ray alignment method is advantageous in that the indication provided is in the form of a wave-image which represents the resonance characteristics of the circuit being tuned. This method is preferred because of the i-f characteristics of this receiver. This type of alignment is possible through use of apparatus such as the RCA Stock No. 9770 Frequency Modulator and the RCA Stock No. 9545 Cathode-Ray Oscillograph. If this equipment is not available, an approximate alignment may be performed by the output-indicator method with an instrument such as the RCA Stock No. 6317 Neon Glow Indicator attached across the loudspeaker voice coil. Alignment by this method is similar to the cathode-ray method outlined below except that the receiver volume control should be at maximum, the trimmers adjusted to peak response (with the exception of the wave-trap) and the test-oscillator a stepping operations attended. Either of these methods requires the use of a reliable test oscillator such as the RCA Stock No. 9995.

Cathode-Ray Alignment

Make alignment apparatus connections shown on figure 5. Remove the plug of the frequency-modulator cable from the test-oscillator jack. Connect the receiver chassis to a good external ground. Connect oscillograph "Vertical" input terminals as indicated on figure 5. Set oscillograph power switch to "On" and adjust "Intensity" and "Focus" controls to give a clearly defined spot, or line, on the screen. Set oscillograph "Amplification" switch to "On," "Vertical gain" control full clockwise, "Amplification" switch to "Timing," "Range" switch to No. 3 position, and "Timing" control to "In." Place the "Sync" control, "Freq. control, and "Horizontal gain" control in about their mid-positions. For each of the following adjustments, the test-oscillator output must be regulated so that the image obtained on the oscillograph screen will be of the minimum size for accurate observation. The receiver volume-control setting is optional.

I-F Adjustments

(a) Turn range selector to its "Standard broadcast" (A) position and tune receiver to a position of no commercial signals near 600 kc. Set dial to 600 kc on the commercial-calibration position. Connect the "Ant." terminal of the test oscillator to the grid cap of RCA-6K7 second i-f tube (with grid lead in place) through a .001-mfd. capacitor, with "Gnd." to receiver chassis. Adjust the test oscillator to 460 kc and place its modulation switch to "On" and its output switch to "Hi."

(b) Turn on the receiver and test oscillator. Increase the output of the test oscillator until a deflection is noticeable on the oscillograph screen. The figures obtained represent several waves of the signal, the amplitudes of which may be observed as an indication of output. Cause the wave-image formed (400-cycle waves) to be spread completely across the screen by adjusting the "Horizontal gain" control. The image should be synchronized and made to remain in position by adjusting the "Sync" and "Freq." controls.

(c) Adjust the two magnetite core screws L30 and L29 (see figures 1 and 10) of the third i-f transformer (one on top and one on bottom) to produce maximum vertical deflection of the oscillographic image. This adjusts the primary of the transformer to exact resonance with the 460 kc signal.

(d) Turn tuning tube adjustment screw R27 (see figure 1) to extreme clockwise position. Adjust output of test oscillator until the width of the dark sector on the fluorescent screen in the RCA-6E5 tuning tube is very narrow ("Magic Eye" almost closed). Adjust the two magnetite core screws L31 and L32 (one on top and one on bottom, see figures 1 and 10) of the tuning tube i-f transformer until minimum width of the dark sector on the fluorescent screen is observed. A decrease of the test-oscillator output may be necessary before the point of minimum width of the dark sector becomes apparent.

(e) The foregoing operation should follow using the frequency modulator. Shift the oscillograph "Timing" switch to "Ext." Insert plug of frequency-modulator cable in test-oscillator jack. Turn the test-oscillator modulation switch to "Off." Turn on the frequency modulator and place its range switch to "Hi."

(f) Increase the frequency of the test oscillator by slowly turning its tuning control until two separate, distinct, and similar waves appear on the screen. If only one wave appears, increase the "Freq." control on the oscillograph to obtain two waves. These waves will be identical in shape, nearly superimposed, and appear as reversed positions. They will have a common base line which is discontinuous. Adjust the "Freq." and "Sync." controls of the oscillograph to make them remain motionless on the screen. Continue increasing the test-oscillator frequency until these forward and reverse curves move together and overlap, with their highest points exactly coincident. This condition will be obtained at a test-oscillator setting of approximately 575 kc.

(g) With the images established as in (f), re-adjust the two magnetite core screws L30 and L29 on the third i-f transformer so that they cause the curves on the oscillograph screen to become

©John F. Rider, Publisher

RCA MFG. CO., INC.

MODEL 15K
Alignment, Part 2
Parts List

©John F. Rider, Publisher

RCA MFG. CO., INC.

RCA VICTOR MODELS C11-3, C13-3, AND C15-4
AND SUPPLEMENT TO
RCA VICTOR MODELS C11-1, C13-2, AND C15-3
TECHNICAL INFORMATION AND SERVICE DATA

With the exception of the cabinets, Models C11-3, C13-3, and C15-4 are respectfully identical to Models C11-1, C13-2, and C15-3 (with metal rectifiers). Schematic and Wiring Diagrams for metal rectifier socket are shown by Figures 1 and 2. Other information is as follows:

Models C11-1 and C11-3 (with metal rectifier).
Service Data for Model C11-1 are directly applicable to these instruments, except the parts listed below as Substitute and Additional Replacement Parts. Replacement Part changes applying to all Models C11-1 and C11-3 are:
(1) Change description of Stock No. 8053 to read:
Indicator—Station selector vernier indicator pointer.
(2) Capacitor C24 should be replaced with Stock No. 4886 instead of Stock No. 4858.
(3) Add Stock Nos. 4886, 11710, and 11793 as listed below.

Models C13-2 and C13-3 (with metal rectifier).
Service Data for Model C13-2 are directly applicable to these instruments, except the parts listed below as Substitute and Additional Replacement Parts. Replacement Part changes applying to all Models C13-2 and C13-3 are:
(1) Change description of Stock No. 8053 to read:
Indicator—Station selector vernier indicator pointer.
(2) Capacitor C60 should be replaced with Stock No. 4886 instead of Stock No. 4883.
(3) Add Stock Nos. 4886, 11710, and 11793 as listed below.

Models C15-3 and C15-4 (with metal rectifier).
Service Data for Model C15-3 are directly applicable to these instruments, except the parts listed below as Substitute and Additional Replacement Parts. Replacement Part changes applying to all Models C15-3 and C15-4 are:
(1) Change description of Stock No. 8053 to read:
Indicator—Station selector vernier indicator pointer.
(2) Capacitor C47 should be replaced with Stock No. 4870 instead of Stock No. 4858.
(3) Add Stock Nos. 4870, 11710, and 11793 as listed below.

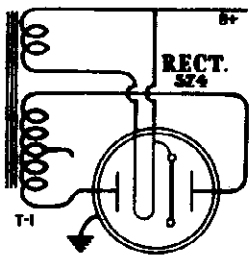

Figure 1

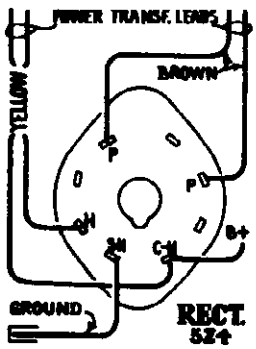

Figure 2

SUBSTITUTE AND ADDITIONAL REPLACEMENT PARTS

	Stock No.	Description	List Price
MODELS C11-1 C11-3 (with metal rectifier)	4886	Capacitor—.05 Mfd. (C24)	.20
	11710	Lead—Shielded antenna lead	.40
	11195	Socket—5-contact rectifier Radiotron socket	.15
	11793	Indicator—Station selector indicator pointer	.15
		Stock Nos. 4858, 11273, and 4794 are not used in chassis having metal rectifier.	
MODELS C13-2 C13-3 (with metal rectifier)	4886	Capacitor—.05 Mfd. (C60)	.20
	11710	Lead—Shielded antenna lead	.40
	11195	Socket—5-contact rectifier Radiotron socket	.15
	11880	Transformer—Power transformer—105-125 volts 50-60 cycles (T1)	5.80
	11887	Transformer—Power transformer—105-125 volts 25-50 cycles	6.95
	11251	Transformer—Power transformer—105/125/150/210/250 volts 40-60 cycles	11.35
	11793	Indicator—Station selector indicator pointer	.15
		Stock Nos. 4883 (C60), 11273, 4794, 8061, 8062, and 11194 are not used in chassis having metal rectifier.	
MODELS C15-3 C15-4 (with metal rectifier)	4870	Capacitor—.025 Mfd. (C47)	.20
	11710	Lead—Shielded antenna lead	.40
	11195	Socket—5-contact rectifier Radiotron socket	.15
	11880	Transformer—Power transformer—105-125 volts 50-60 cycles (T1)	5.80
	11887	Transformer—Power transformer—105-125 volts 25-50 cycles	6.95
	11231	Transformer—Power transformer—105/125/150/210/250 volts 40-60 cycles	11.35
	11793	Indicator—Station selector indicator pointer	.15
		Stock Nos. 4858 (C47), 11273, 4794, 8061, 8062, and 11194 are not used in chassis having metal rectifier.	

The prices quoted above are subject to change without notice.

©John F. Rider, Publisher

RCA MFG. CO., INC.

MODEL R-93
Schematic, Motor Details
Wiring Diagram, Pickup

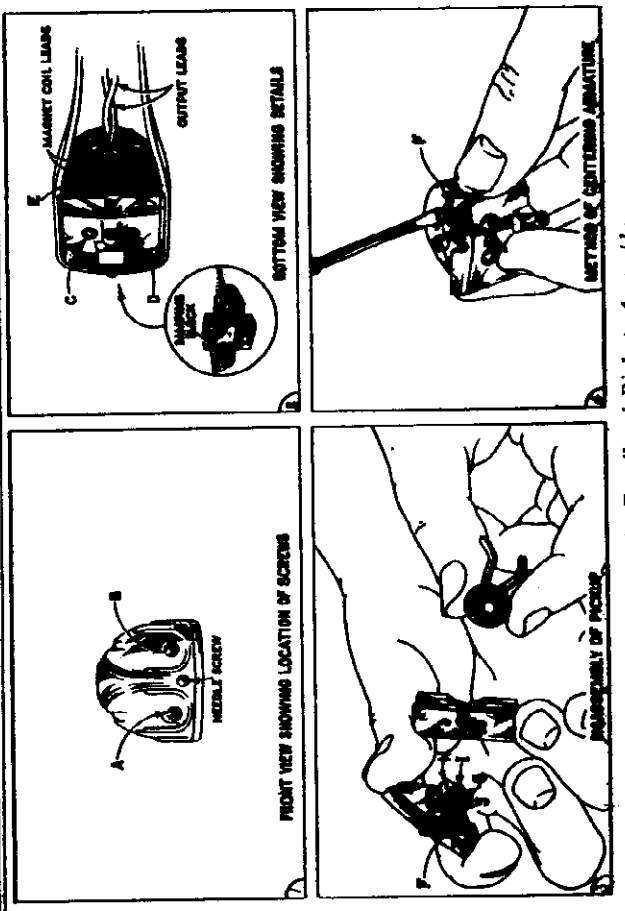

Figure 1—Details of Pickup Assembly

COIL RESISTANCE

First Production	
110 V. 50 or 60 Cycles	215 ohms total
110 V. 25 Cycles	960 ohms total
230 V. 50 Cycles	1270 ohms total
Second Production	
110 V. 50 or 60 Cycles	200 ohms total
110 V. 25 Cycles	880 ohms total

Figure 4—Motor Wiring Connections

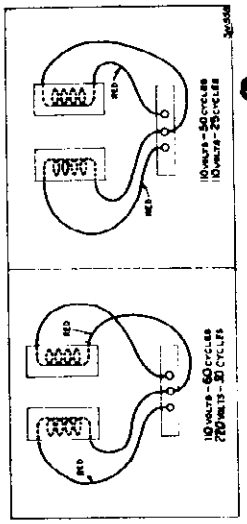

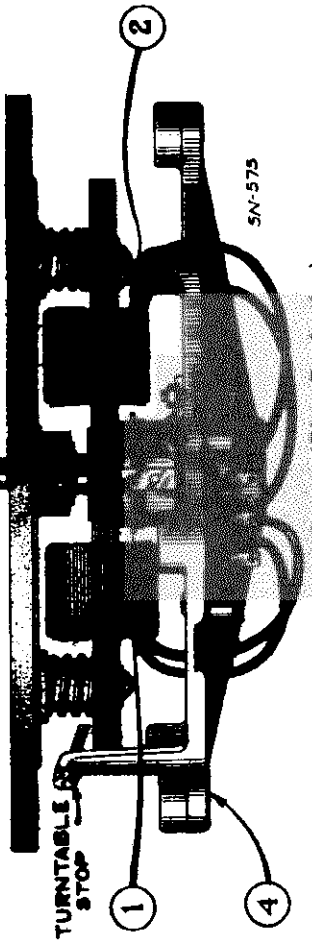

Figure 5—Details of Motor (First Production)

(For details of sections (1), (2), and (4), refer to corresponding sections below)

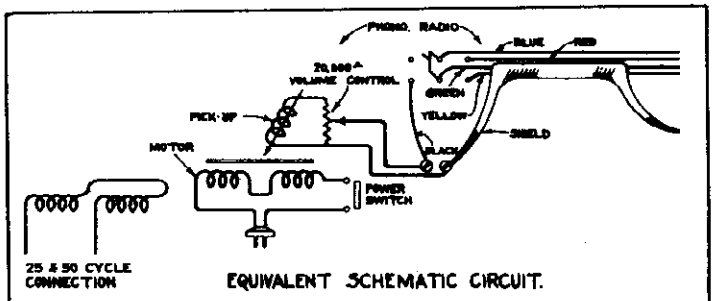

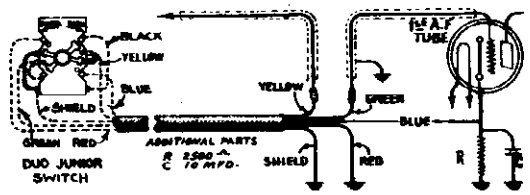

Figure 2—Typical Connections for Model C 15-3

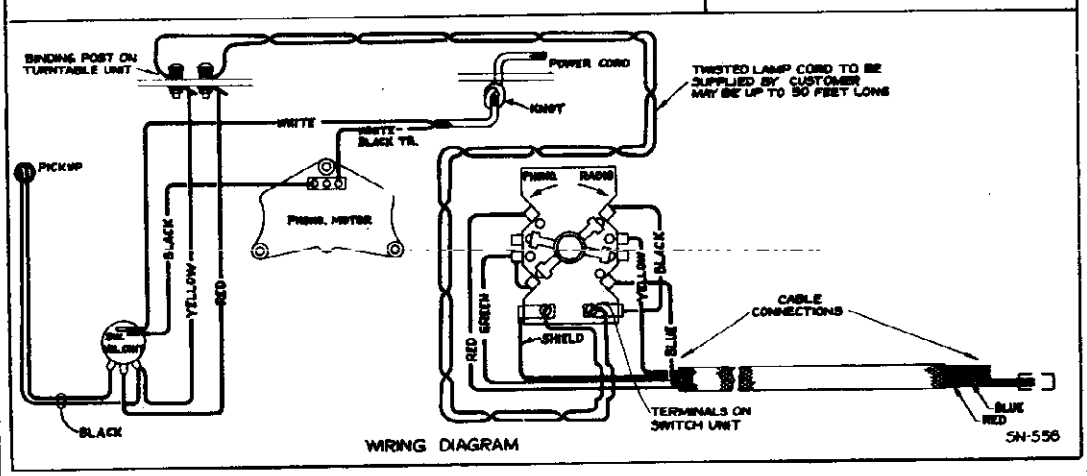

Figure 3—Wiring Diagram and Equivalent Schematic Circuit

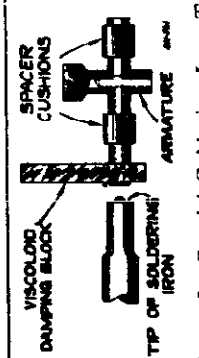

Figure 8—Special Soldering Iron Tip

© John F. Rider, Publisher

MODEL R-93
Motor Details(Late)

RCA MFG. CO., INC.

Typical Layout

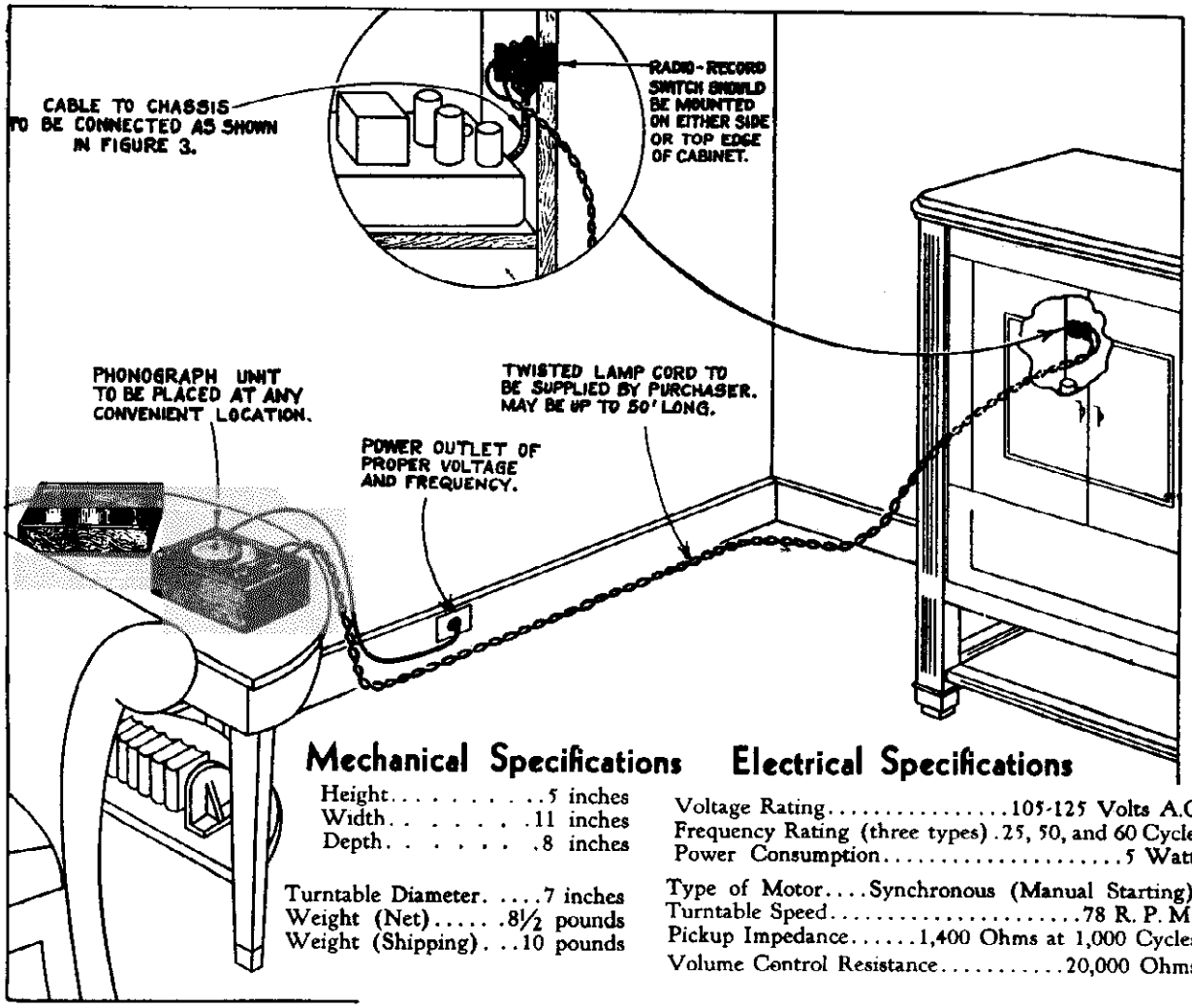

Figure 1—Typical Layout and Connections for Model R-93

Mechanical Specifications

Height	5 inches
Width	11 inches
Depth	8 inches
Turntable Diameter	7 inches
Weight (Net)	8½ pounds
Weight (Shipping)	10 pounds

Electrical Specifications

Voltage Rating	105-125 Volts A.C.
Frequency Rating (three types)	25, 50, and 60 Cycles
Power Consumption	5 Watts
Type of Motor	Synchronous (Manual Starting)
Turntable Speed	78 R. P. M.
Pickup Impedance	1,400 Ohms at 1,000 Cycles
Volume Control Resistance	20,000 Ohms

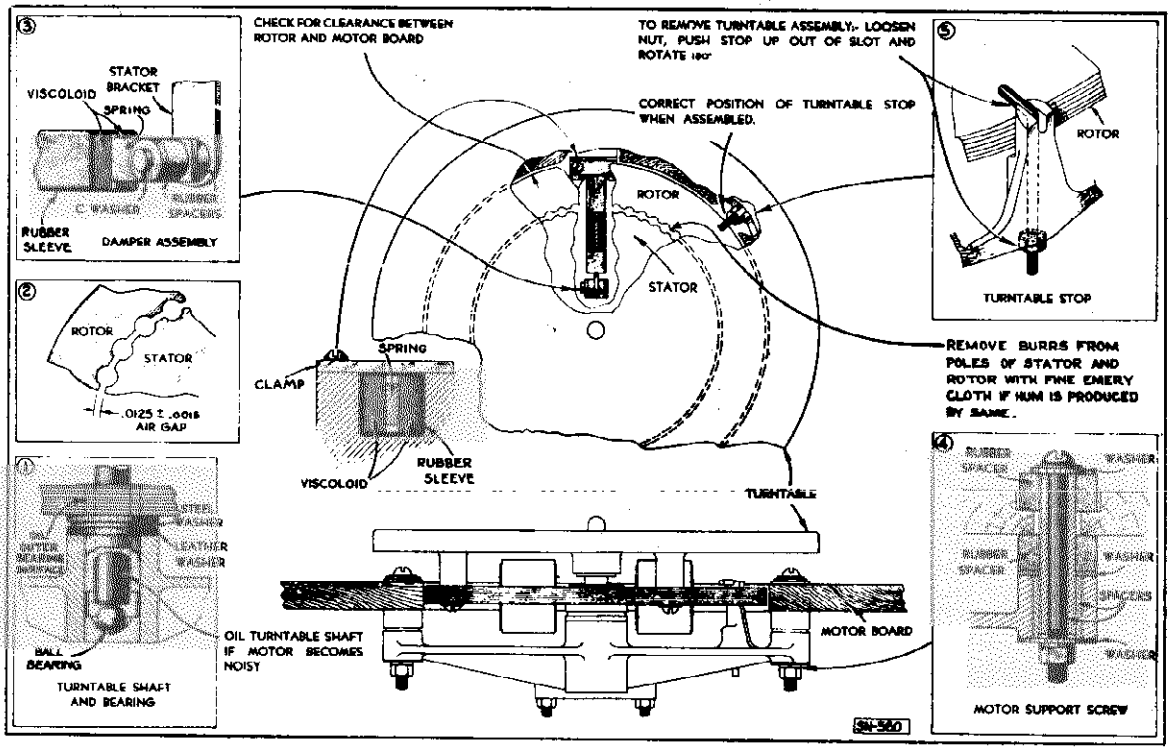

Figure 6—Details of Motor (Second Production)

©John F. Rider Publisher

RCA MFG. CO., INC.

MODEL R-93
Lead Connections

RCA VICTOR RECEIVERS—DETAILS OF LEAD CONNECTIONS

Model	Method of Connection	Green	Yellow	Red	Blue	Shield
R-4, 6, 8, 10, 12, 70, 71, 72, 74, 76, 77	5. Adapter	Det. Cathode	Cathode Socket Contact	Ant.	Ant. Lead	Chassis
R-5, 17M, 27	5. Adapter	Det. Cathode	Cathode Socket Contact	Ant.	Ant. Lead	Det. Cathode (Yellow)
R-7, 7A	2. Term. Board	Term. 2 (Open Link)	Term. 1	Ant.	Ant. Lead	Term. 4
R-11,21	2. Term. Board	Term. 2 (Open Link)	Term. 3	Term. 4 (Open Link)	Term. 5	Term. 6
R-18W, 22	5. Adapter	Det. Cathode	Cathode Socket Contact	Ant.	Ant. Lead	Det. Cathode (Yellow)
RO-23	5. Adapter	Det. Cathode	Cathode Socket Contact	Ant.	Ant. Lead	Chassis
R-28	5. Adapter	Det. Cathode	Cathode Socket Contact	Ant.	Ant. Lead	Chassis
R-37, 38, 73, 73A, 75, 75A	3. Grid Clip	Grid Cap of Tube	Grid Clip	Ant.	Ant. Lead or Bind. Post	Chassis
Rad. 48	2. Term. Board	Term. 4 (Open Link)	Term. 5	Term. 2 (Open Link)	Term. 3	Term. 5
R-50, 55	2. Term. Board	Term. 3 (Open Link)	Term. 4	Term. 1 (Open Link)	Term. 2	Term. 6
R-78	2. Term. Board	Term. 7 (Open Link)	Term. 8	Term. 1 (Open Link)	Term. 2	Chassis
Rad. 80	5. Adapter	Det. Cathode	Cathode Socket Contact	Ant.	Ant. Bind. Post	Chassis
Rad. 82	2. Term. Board	Term. 2 (Open Link)	Term. 3 (Tie in Term.1 to Term.3)	Term. 2	Term. 3	Term. 3
R-90, 260, 261	5. Adapter	Det. Cathode	Cathode Socket Contact	I-F Amp.* Cathode	I-F Cathode Socket Contact	Chassis
103	6. Under Chassis	Det. Grid Term.	Grid Lead	Ant.	Ant. Lead	Chassis
110, 111, 115, 210	5. Adapter	Det. Cathode	Cathode Socket Contact	Ant.	Ant. Lead or Bind. Post	Cathode Socket Contact
114	5. Adapter	Det. Cathode	Cathode Socket Contact	Ant.	Ant. Lead	Det. Cathode (Yellow)
117, 118, 119, 120, 121, 122, 124, 125, 128, 211, 214, 220, 221, 222, 224, 225, 226	3. Grid Clip	Grid Cap of Tube	Grid Clip	Ant.	Ant. Lead or Bind. Post	Chassis
140, 141, 240	2. Term. Board	Term. 3	Tape	Term. 1	Term. 2	Term. 1
143, 242	2. Term. Board	Term. 5 (Open Link)	Term. 4	Term. 1 (Open Link)	Term. 2	Chassis
262	2. Term. Board	Term. 2 (Open Link)	Term. 1	I-F Cathode (Adapter)	I-F Cathode Socket Contact	Chassis
280	5. Adapter	Det. Cathode	Cathode Socket Contact	I-F Cathode*	I-F Cathode Socket Contact	Chassis
T 4-8, 4-9	6. Under Chassis	Det. Grid Term.	Grid Lead	Ant.	Ant. Lead	Chassis
T 4-8A, 4-9A, 4-10, 5-2	3. Grid Clip	Grid Cap of Tube	Grid Clip	Ant.	Ant. Lead	Chassis
T 6-1, 6-9, 7-5, 8-14	4. Grid Clip	Grid Cap of Tube	Grid Clip	I-F Cathode (Adapter)	I-F Cathode Socket Contact	Chassis
C 6-2, 7-6, 8-15, 9-4	4. Grid Clip	Grid Cap of Tube	Grid Clip	I-F Cathode (Adapter)	I-F Cathode Socket Contact	Chassis
T 8-16, 9-9 C 8-17, 9-6	2. Term. Board	Term. 2 (Open Link)	Term. 1 (Left Term.)	Term. 3 (OpenLink)	Term. 4	Chassis
T 10-1 C 11-1, 13-2, 15-3	5. Adapter	1st Audio Cathode	Cathode Socket Contact	I-F Cathode*	I-F Cathode Socket Contact	Chassis
T 10-3, 11-8	2. Term. Board	Term. 2 (Open Link)	Term. 1	I-F Cathode (Adapter)	I-F Cathode Socket Contact	Chassis

* Use a second adapter.

©John F. Rider, Publisher

©John F. Rider, Publisher

General Description

This phonograph turntable and pickup assembly is designed to provide record reproduction to the owner of a modern radio receiver by utilizing the audio amplifier system and loudspeaker of the radio receiver in such a way as to provide quality of reproduction equal to or better than that obtained from radio stations. A switch is provided for changing from radio to record reproduction, or vice versa. Simplicity, compact size, and ease of connections are outstanding features of this instrument.

Electrically, the instrument consists of a magnetic pickup for transforming the mechanical variations of the record grooves to voltage variations, a combined power switch and volume control for turning power on and off and adjusting the output voltage to any desired level, and a radio-record switch for shifting the connections to the receiver so that either radio or record reproduction may be obtained as desired by the user.

Figure 1 shows a typical layout of an ideal installation. Figure 3 shows the schematic and wiring diagrams. The wiring diagram indicates the proper connections to be made between the pickup unit, the switch assembly, and the end of the cable connecting to the switch.

Connecting Phonograph to the Radio Receiver

When connecting a phonograph unit to a radio receiver, a few fundamental facts should be considered. First, the output of the pickup must be connected to the receiver at a point where sufficient audio gain between it and the speaker is available to give normal sound output. Second, when doing this, some attention should be given to the possibilities of introducing hum and undesired noise, both in the audio and in the radio circuits.

In general, it will be found that the grid or cathode circuits of the second detector of a superheterodyne receiver are suitable for phonograph input. However, on receivers using the type 6H6 as a second detector, the grid of the first audio amplifier should be used. On tuned r-f receivers, either the detector cathode or the first audio transformer primary circuit may be employed, depending upon the amount of audio gain and the type of detector used.

On receivers employing a volume control in the audio circuit between the first and second audio stages, it is advisable to use the phonograph volume control to maximum and use the radio receiver volume control for adjusting the phonograph output. In circuits of this type which are aurally compensated, advantage is taken of the compensation feature when the radio receiver volume control is used.

On receivers employing a volume control between the second detector and first audio, or in the antenna, r-f, or i-f circuits, and with the phonograph input connected to the first a-f stage, it will be necessary to control the phonograph output by using the phonograph volume control. The receiver volume control may then be set to minimum to "kill" radio reception.

Investigation of a large number of receivers has shown that six general types of connections (five of which may be made without removing the chassis from the cabinet) cover practically every type of receiver. These connections are as follows:

(1) Receivers having phonograph input jacks and Radio-Record Switches. With these receivers, the cable and switch supplied with the R-93 are not used. The phonograph output is connected direct to the phonograph input jack and the Radio-Record Switch on the receiver is used for changing from Record to Radio reproduction.

(2) Receivers having phonograph terminal board connections. Such connections should be made in accordance with the instructions pertaining to that particular instrument.

(3) Receivers using the type 2B7 or 6B7 second detectors. With receivers of this type, the yellow and green leads are connected in series with the grid cap connection of this tube, the green lead connected to the grid cap itself.

(4) Receivers using the type 6F5 as a first audio tube. On receivers of this type, the yellow and green leads are connected in series with the grid cap connection of this tube, the green lead connected to the grid cap itself.

(5) Receivers not having any of the foregoing features. On receivers of this type, a split cathode connection is necessary. Stock No. 4611 five-prong adapter, or Stock No. 4612 six-prong adapter, may be used which is placed under the tube used in the second detector socket of the receiver. Stock No. 11957 eight-prong "octal" adapter may be placed under the first audio tube, such as the type 6C5. In the above cases, the yellow and green leads are connected in series with the cathode, the green lead connected to the tube cathode and yellow lead to the cathode socket contact.

(6) Under Chassis Connections. The above connections (3), (4), and (5), are recommended when it is desired to connect the R-93 without removing the chassis and making changes in its wiring. Better results may often be obtained by making permanent connections underneath the chassis. Additional parts (such as a cathode bias resistor and its by-pass capacitor) may be added to supply the necessary bias for phonograph operation when the stage is signal biased. A typical example of such an arrangement as recommended for Model C 15-1 is shown by Figure 2. (Note the additional jumpers added to the switch for killing radio.) All leads should be kept as short as possible and properly shielded. Also, care should be taken in the placement of leads in regard to a-c heater wiring, power transformer, etc., to prevent hum pickup. Receivers using a multi-purpose tube for i-f and second detector (such as Model T 4-8), the yellow and green leads should be connected in series with the detector grid; the connection being made in series with the ground side of the i-f transformer secondary to avoid detuning due to capacity effects.

It will be noted that red and blue leads are brought out from the switch for "killing" the radio circuit during record reproduction. On early receivers, these may be connected in series with the antenna lead to open the antenna circuit during phonograph operation. In the event of unsatisfactory radio suppression with this connection, better results may be obtained by re-connecting the red and blue leads to the adjacent respective lugs on the Radio-Phono Switch and attaching the outer ends to the Ant.-Gnd. terminals of the receiver so as to short-circuit these terminals during phonograph operation. CAUTION: This scheme of connection should be avoided on AC-DC receivers unless a small capacitor (.05 mfd.) is used in series with either switch lead.

For most positive radio suppression, a split cathode adapter should be used in an i-f socket and the red and blue leads connected (standard connection at Radio-Phono Switch) in series with the cathode so that this circuit will be open for phonograph operation.

If the receiver is of the "All-Wave" type, it is recommended that a split cathode adapter always be used in an i-f socket. CAUTION: If a "Doublet" antenna is used, do not place the switch in series with either side of the transmission line as the operation of the antenna system may be affected.

On the preceding page, a list of numerous receivers and their proper connections are given.

RK-24 Phonograph Oscillator

In addition to the above recommended connections of the R-93 to radio receivers, the RCA Stock No. 9554 RK-24 Phonograph Oscillator provides a convenient and reliable means for connection and operation of the R-93 with a radio receiver of any type of manufacture. Its proper connections are shown in the RCA Victor RK-24 Service Notes.

Phonograph Motor Service Data

NOTE: The motor used in the Second Production R-93 turntables is somewhat different from that used in the First Production. They are hereinafter designated as (1) First Production and (2) Second Production. Changes denoting the difference between the two types are indicated in Figure 5 (First Production) and Figure 6 (Second Production). Replacement Parts are likewise tabulated separately for each type.

The synchronous motor used in this instrument is designed to be simple and foolproof. Among its many features are constancy of speed, low power consumption, single moving part, ease of starting, viscoloid damper and long life. The main parts of the motor and the points that may require attention are shown by Figure 5 (First Production) and Figure 6 (Second Production). The motor is started by turning "On" the power switch and giving the turntable a clockwise spin with the hand. If the motor is difficult to start it may be due to the stator failing to rotate on the outer bearing. This may be corrected by applying a slight amount of oil to the bearing surfaces. It is very important that the ball bearing be at the bottom of the main bearing assembly.

Excessive Hum and Vibration

A small amount of hum when starting, decreasing to a negligible amount while running, is normal. If excessive vibration occurs either at starting or running, it may be due to one of the following:

(1) Insufficient lubrication in outer bearing or any other failure that will cause the stator to bind.
(2) Metal washer not above the leather washer at the bottom of the main bearing.
(3) Leather washer not oiled. When replacing the leather washer, make sure that it is thoroughly soaked in oil.
(4) Motor not properly supported from motor board. Unless the motor is properly supported from the motor board, normal vibration will be excessive.
(5) Burrs on salient poles of rotor or stator. They should be removed with fine emery cloth.

Removing Rotor from Stator

The rotor which includes the turntable may be removed as follows:

(1) First Production. Loosen the screw shown in Figure 5 until it clears the rotor. Then lift the turntable, being careful not to lose the steel ball of the end-bearing. After replacing the rotor, tighten the retaining screw securely.
(2) Second Production. Loosen the nut shown in (5) of Figure 6, pushing the stop out of the slot and rotating 180 degrees. Then lift the turntable, being careful not to lose the ball end-bearing. After replacing the rotor, return the stop to its normal position and tighten the nut securely.

PICKUP UNIT SERVICE DATA

The magnetic pickup and tone arm assembly of this instrument is of new design and unique construction. Service work will consist of centering the armature and replacing the spacer cushions, damping block, and replacing the magnet coil.

Disassembling the Pickup

The pickup may be disassembled in the following manner.

(a) Unsolder the two cable connections to the terminal strip.
(b) Remove the needle screw and screws "A" and "B."
(c) Remove the pickup assembly from the arm and housing.
(d) Unsolder the two magnet coil leads attached to the terminals and then remove screw E. This will allow the removal of the terminal board.
(e) If centering the pickup armature is the only adjustment required, such centering can be done without removing the terminal board indicated in (d). The armature is centered by loosening screw F, accessible through the hole shown, and holding the armature with the finger in proper position while screw F is tightened. "Feeling" the armature while deflecting it between its two extremes is the best manner of ascertaining proper centering. When centering, after work has been done or the magnet removed, it is important that the magnet be remagnetized while in place.
(f) If the coil or spacer cushions are to be replaced, the pickup must be further disassembled. This is done by removing the magnet and then removing screws C and D. The pole piece may now be removed and the old coil and sleeve disassembled. Acetone will be found helpful for dissolving the old cement that holds the coil in place. The new coil, with its sleeve, may now be replaced and cemented in a similar position to that occupied by the old coil. Duco household or Ambroid cement may be used to hold the coil in place. Be careful to center the coil with its paper sleeve before cementing. Only rosin core solder should be used for soldering the coil leads in the pickup.
(g) The spacer cushions are replaced by loosening the armature adjusting screw F and removing screw G, clamp H and washer I and removing the armature from its bracket. Damping block J must be removed from the armature. After putting the new spacer cushions in place, a new damping block should be fastened to the armature as outlined in instructions on replacing the damping block. The cushions can then be removed by slipping them from each end of the pivot shaft.

Replacing the Damping Block

If it is desired to replace the damping block, it may be done in the following manner:

(a) Disassemble the pickup as described under the preceding section.
(b) Remove the damping block from the armature and clean the armature shaft with emery paper.
(c) Insert the armature through the new block so that it occupies the same position as that of the old. Also ascertain that the block is in correct vertical alignment with the armature. It will be noted that the hole in the damping block is somewhat smaller than the shaft diameter. This is done so that a snug fit will be obtained.
(d) After properly locating the damping block, a soldering iron should be applied to the armature so that the block will melt slightly at its point of contact with the armature. A special tip, constructed as shown in Figure 8, will prove desirable for fusing the block in place. The iron should be applied only long enough to melt the block sufficiently to cause a small bulge on each side, and must be removed before any bubbling occurs. The pickup should then be reassembled.

It is important to remember that in all operations after reassembling but before placing in the tone arm, the pickup should be magnetized and the armature centered after remagnetizing. Magnetizing should be done by placing the pickup magnet on the magnetizer and sliding it onto the pole pieces, after magnetizing being careful not to break the magnetic circuit.

REPLACEMENT PARTS

Stock No.	Description	List Price
	MOTOR ASSEMBLIES FIRST PRODUCTION	
10194	Ball—Steel ball bearing—Package of 20	$0.35
7657	Base—Motor base and bearing assembly—50-60 cycle—105-115/200-250 volt operation	1.20
9513	Base—Motor base and bearing assembly—25 cycle operation	1.20
9519	Coil—Stator assembly—Comprising coil and laminations—105-125 volt, 60 cycle operation	2.50
9511	Coil—Stator assembly—Comprising coil and laminations—105-125 volt, 50 cycle operation	2.35
9514	Coil—Stator assembly—Comprising coil and laminations—105-125 volt, 25 cycle operation	2.35
9529	Coil—Stator coil assembly—Comprising coil and laminations—50 cycle, 200-250 volt operation	2.50
9515	Motor—105-125 volts—60 cycle motor	8.80
9516	Motor—105-125 volts—50 cycle motor	8.45
9517	Motor—105-125 volts—25 cycle motor	9.00
9528	Motor—200-250 volts—50 cycle motor	9.60
4456	Motor accessories—Comprising 3 nuts, 1 shield and 1 screw	.10
3813	Motor suspension assembly—Comprising one screw, one metal bushing, two rubber bushings, one flat washer, one lockwasher and one nut—Package of 5	.56
4457	Spring, screw and washer assembly—Used to mount rotor laminations to turntable—Comprising 3 springs, 3 screws and 9 washers	.15
9520	Turntable—Turntable assembly complete with rotor laminations—60 cycle operation	4.45
9515	Turntable—Turntable assembly complete with rotor laminations—25 cycle operation	4.85
9522	Turntable—Turntable assembly complete with rotor laminations—105-125/200-250 volt—50 cycle operation	4.15
4083	Washer—Leather washer—Package of 10	.30
4084	Washer—Metal washer—Package of 10	.26
	MOTOR ASSEMBLIES SECOND PRODUCTION	
10194	Ball—Steel ball bearing—Package of 20	.35
11740	Base—Motor base and bearing assembly	1.45
11733	Coil—Stator assembly—Comprising coil and laminations—105-125 volt, 60 cycle operation	2.96
11734	Coil—Stator assembly—Comprising coil and laminations—105-125 volt, 50 cycle operation	3.08
11748	Damper—Motor damper assembly—Comprising one damper, one damper plate, one screw, two rubber washers, and one "C" washer	.20
11873	Motor—105-125 volts—60 cycle motor	9.95
11874	Motor—105-125 volts—50 cycle motor	9.95
4456	Motor accessories—Comprising 3 nuts, 1 shield and 1 screw	.10
11876	Turntable—Turntable assembly complete with rotor laminations—60 cycle operation	4.35
11875	Turntable—Turntable assembly complete with rotor laminations—50 cycle operation	4.35
4083	Washer—Leather washer—Package of 10	.30
4084	Washer—Metal washer—Package of 10	.26
	PICKUP AND ARM ASSEMBLIES	
3812	Armature—Pickup armature	.12
4462	Cable—Pickup cable	.30
3810	Coil—Pickup coil	.12
3091	Cushion—Pickup armature spacer cushion—Package of 10	.50
4543	Damper—Damper block complete with damper clamp, washer	.10
4503	Pickup and arm assembly complete	4.95
3811	Screw—Needle holding screw—Package of 10	.46
	CABINET ASSEMBLIES	
X-249	Bottom—Lower section of wood cabinet	2.95
X-248	Cover—Top half of wood cabinet	3.00
	MISCELLANEOUS ASSEMBLIES	
4611	Adaptor—Five-prong split cathode adaptor	1.00
4612	Adaptor—Six-prong split cathode adaptor	1.00
11957	Adaptor—Eight-prong "octal" split cathode adaptor with ground lug	1.00
4461	Cable—3-conductor—Radio-Record switch cable	.28
4459	Bracket—Volume control mounting bracket	.10
4463	Foot—Felt foot for bottom cover—Package of 10	.20
3829	Knob—Radio-Record switch knob—Package of 5	1.10
3961	Knob—Volume control knob—Package of 5	.60
4458	Post—Binding post—Package of 10	2.50
4507	Rest—Pickup rest—Package of 5	.60
4119	Screw—No. 8-32-1¼-inch headless set screw for knob—Package of 20	.18
4480	Switch—Radio-Record switch	.40
4502	Volume control (R1)	1.14

The prices quoted above are subject to change without notice.

MODEL R-99
Schematic
Loudspeaker

RCA MFG. CO., INC.

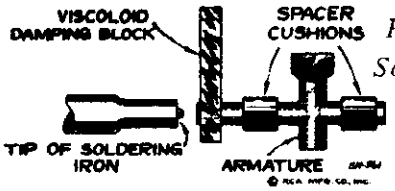

Figure 6—Special Soldering-Iron Tip

Radiotron Cathode Current Readings
Measured with Milliammeter Connected at Tube Socket Cathode Terminal under Conditions Similar to Those of Voltage Measurements

(1) RCA-6L7—Expander	7.6	ma.
(2) RCA-6C5—Audio Driver	4.4	ma.
(3) RCA-2A3—Power Output	41	ma.
(4) RCA-2A3—Power Output	41	ma.
(5) RCA-6C5—Expander Amplifier	1.9	ma.
(6) RCA-6H6—Expander Rectifier	0	ma.
(7) RCA-5Z3—Rectifier	165	ma.*

(* Cannot be measured at socket)

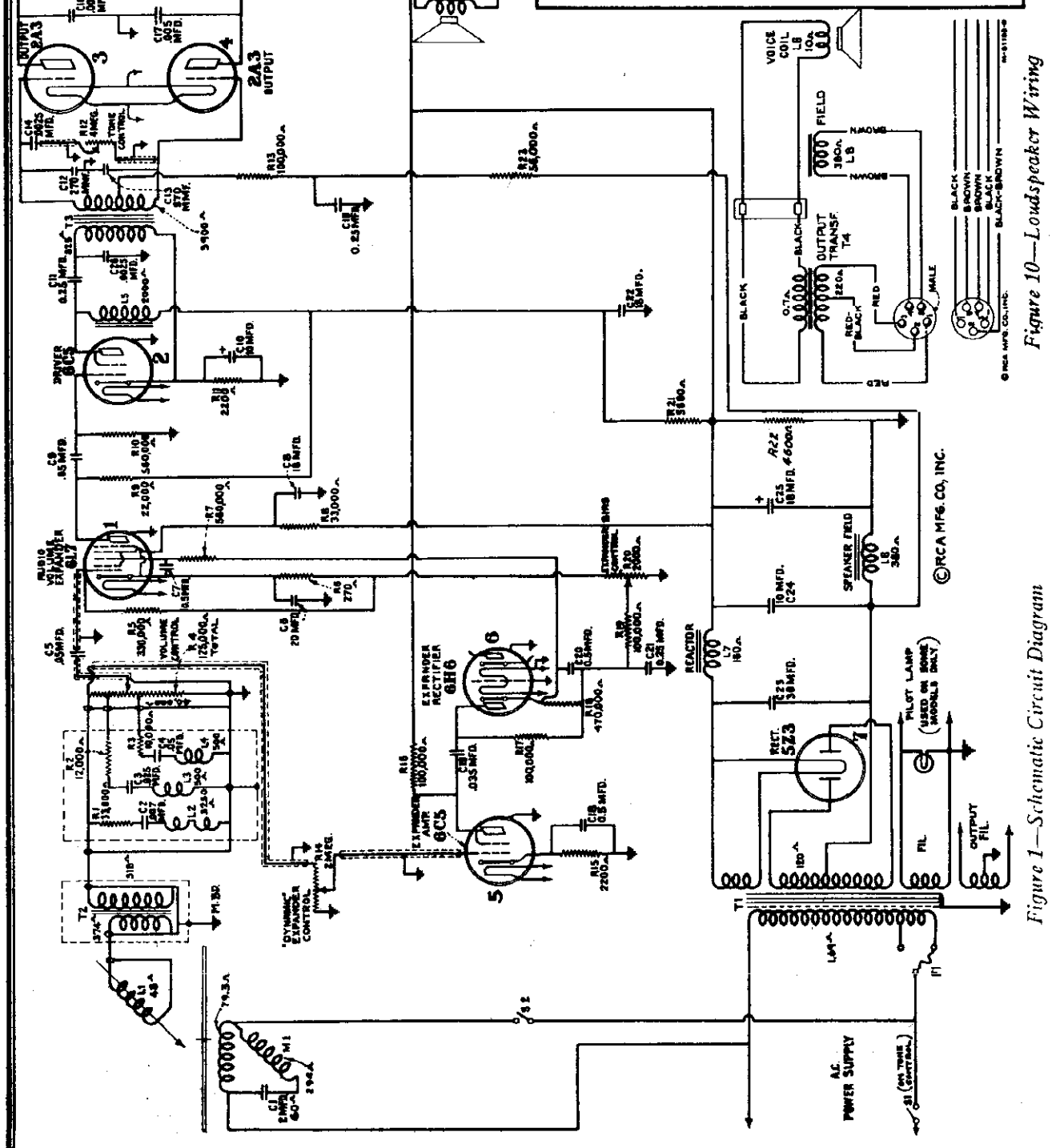

Figure 10—Loudspeaker Wiring

Figure 1—Schematic Circuit Diagram

©John F. Rider, Publisher

MODEL R-99
Chassis Wiring
Pickup, Socket

RCA MFG. CO., INC.

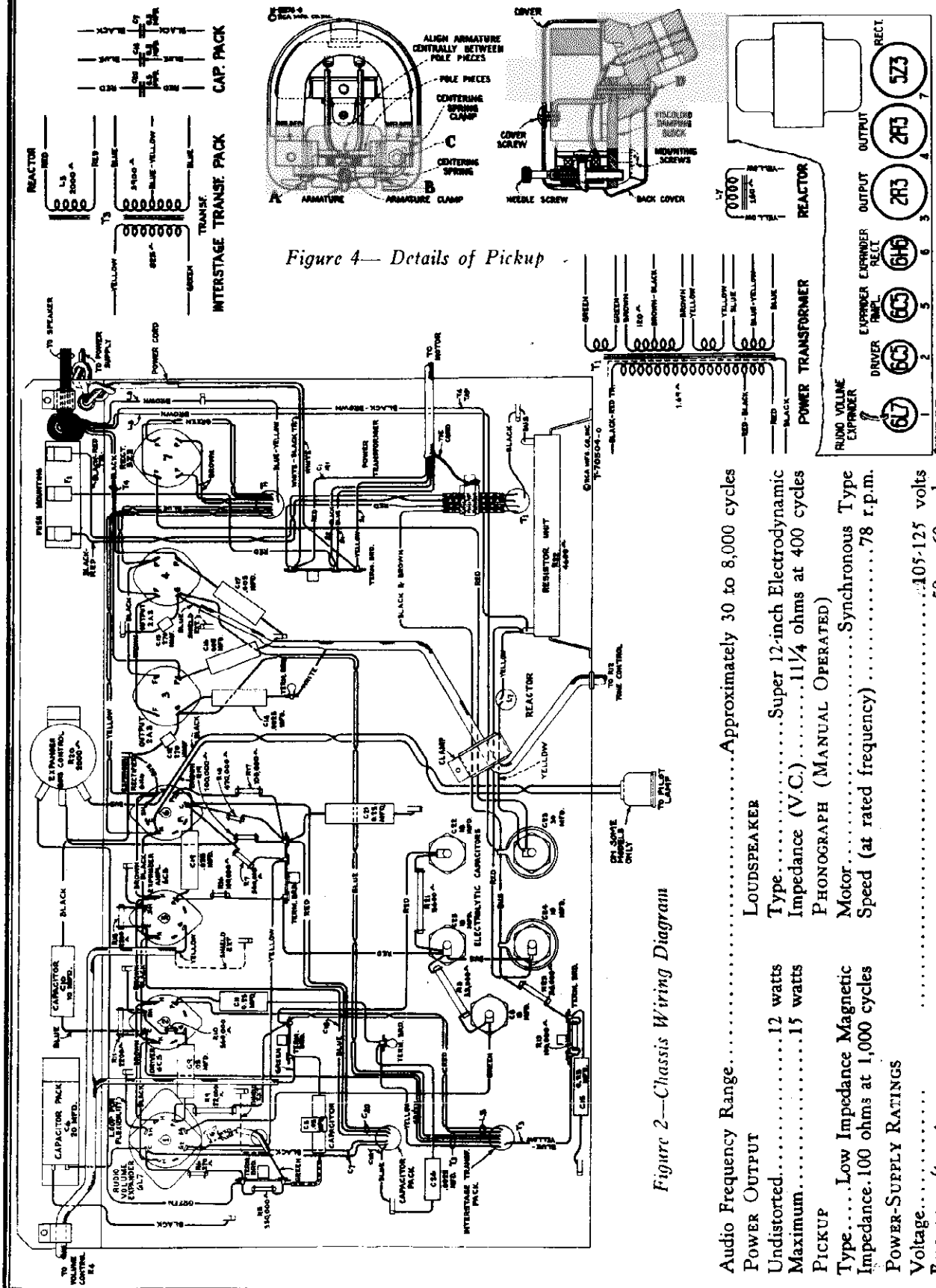

Figure 4— Details of Pickup

Figure 3—Radiotron Locations

Figure 2—Chassis Wiring Diagram

Audio Frequency Range.....Approximately 30 to 8,000 cycles

POWER OUTPUT

LOUDSPEAKER

Undistorted.....12 watts
Maximum.....15 watts

Type.....Super 12-inch Electrodynamic
Impedance (V.C.).....11¼ ohms at 400 cycles

PICKUP

PHONOGRAPH (MANUAL OPERATED)

Type.....Low Impedance Magnetic
Impedance 100 ohms at 1,000 cycles

Motor.....Synchronous Type
Speed (at rated frequency).....78 r.p.m.

POWER-SUPPLY RATINGS

Voltage.....105-125 volts
Frequency (two types).....50 or 60 cycles
Power Consumption.....180 watts

©John F. Rider, Publisher

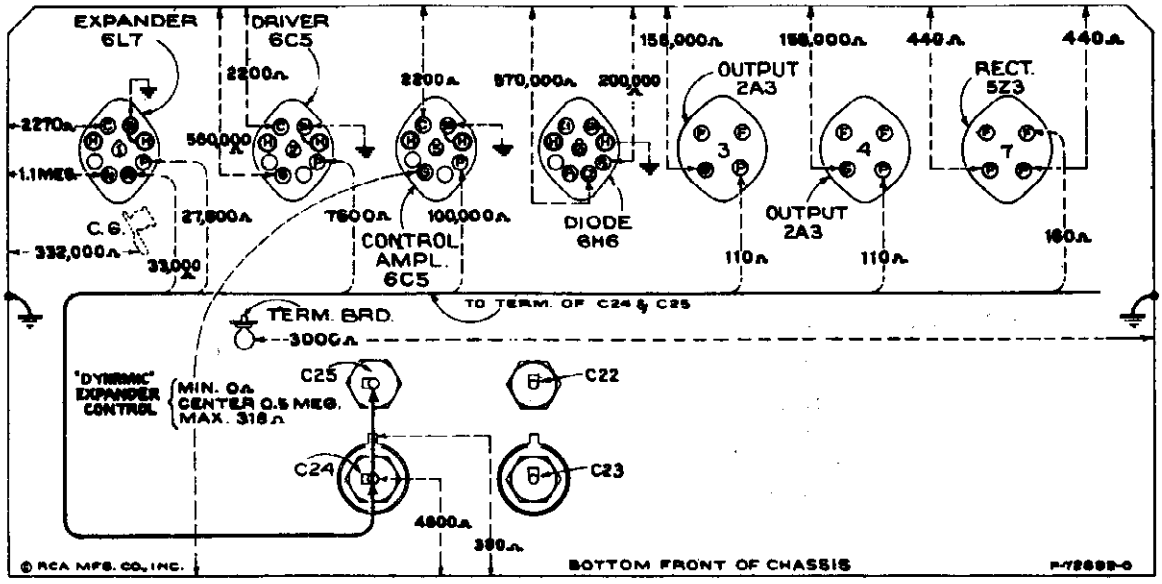

Figure 5—Resistance Diagram

Power supply disconnected—Radiotrons in sockets

The resistance values shown between Radiotron socket contacts, grid caps, resistors, terminals, and amplifier chassis ground, on figure 5, have been carefully selected so as to facilitate a rapid continuity check of the circuits. The use of this diagram in conjunction with the Schematic Circuit Diagram, figure 1, and Chassis Wiring Diagram, figure 2, will permit the location of certain troubles which might otherwise be difficult to ascertain. Each value as specified should hold within ±20%. Variations in excess of this limit will usually be indicative of trouble in circuit under test. When measuring the resistance between points of the circuit and ground, it will be necessary to connect the negative terminal of the resistance meter to chassis-ground. If the polarity of the resistance meter is not known, it may be readily ascertained by connecting a d-c voltmeter of indicated polarity across the terminals of the device.

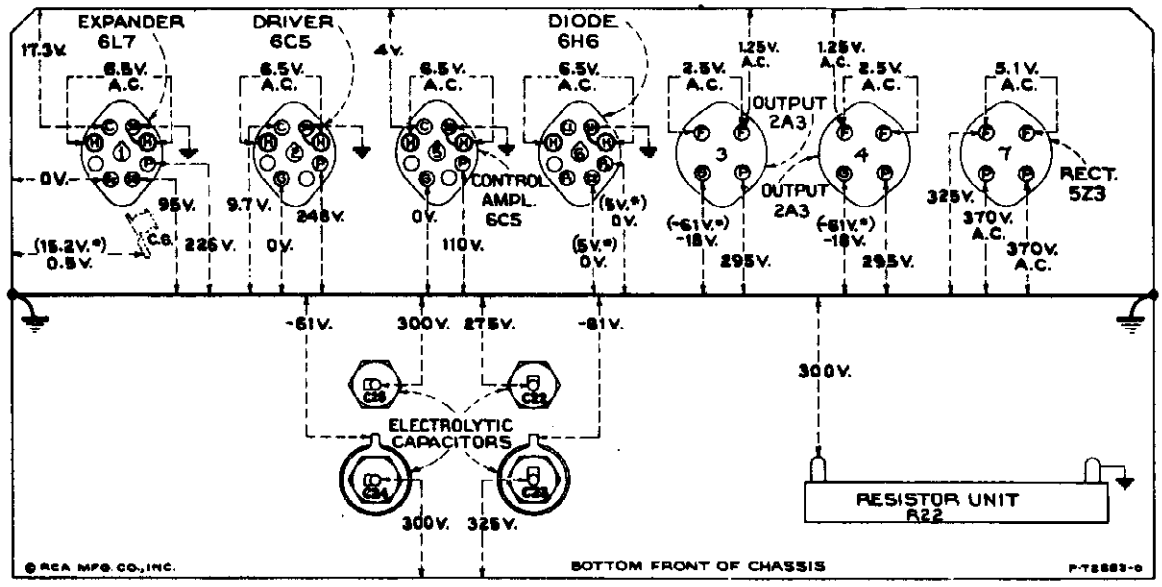

Figure 7—Radiotron Socket Voltages

Measured at 120 volts on 120-volt tap, rated frequency—Volume control minimum—Expander "Dynamic" control minimum—Dynamic amplifier adjusted as per text—No signal

Note: *Two voltage values are shown for some readings. The higher value shown in parenthesis with asterisk (*) indicates operating conditions without voltmeter loading. The lower value is the actual measured voltage and differs from the higher value because of the additional loading of the voltmeter through the high series circuit resistance.*

The voltage values indicated from the Radiotron socket contacts, grid caps, resistors, and terminals to amplifier chassis ground on figure 7 will assist in locating cause for faulty operation. Each value as specified should hold within ±20% when the amplifier is normally operative at its rated line voltage. Variations in excess of this limit will usually be indicative of trouble in the basic circuits. To duplicate the conditions under which the voltages were measured requires a 1,000-ohm-per-volt d-c meter, having ranges of 10, 50, 250, 500, and 1,000 volts. Use the nearest range above the voltage to be measured. A-c voltages were measured with a corresponding a-c meter.

©John F. Rider, Publisher

MODEL R-99
Motor Adjustments
Assembly Wiring

RCA MFG. CO., INC.

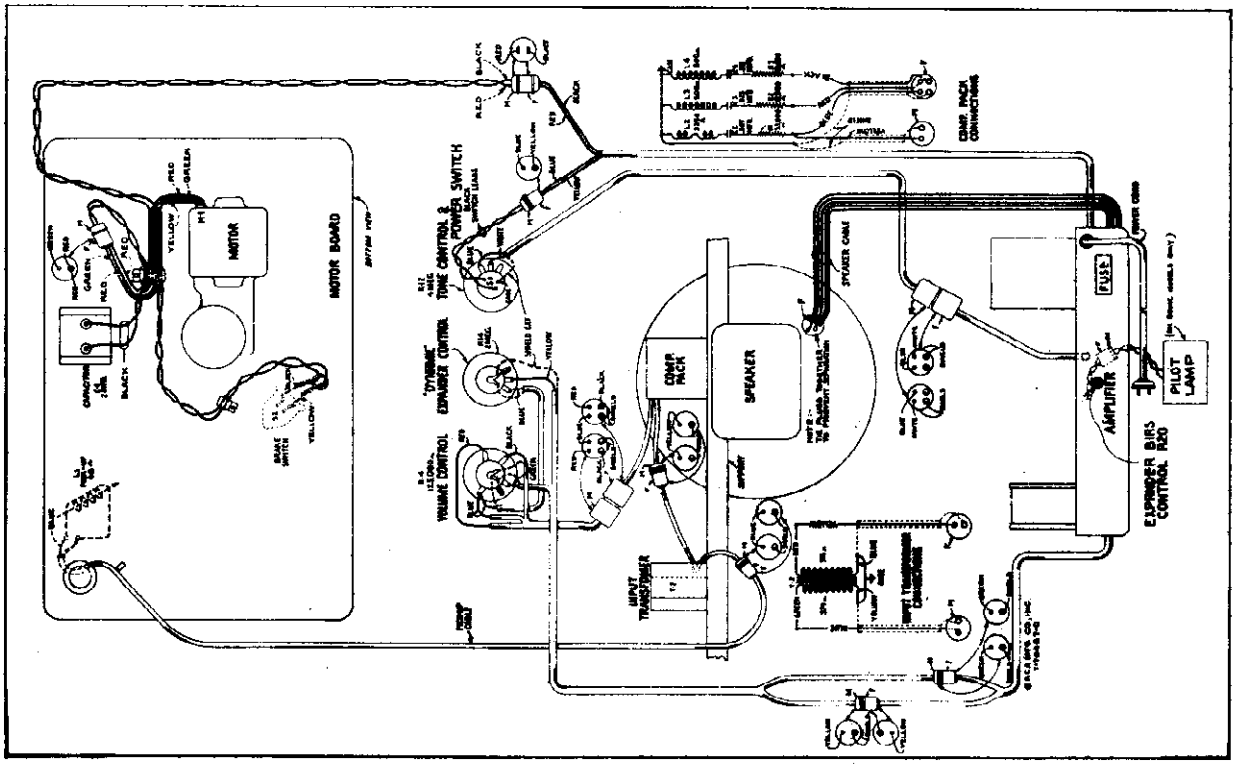

Figure 9—Assembly Wiring

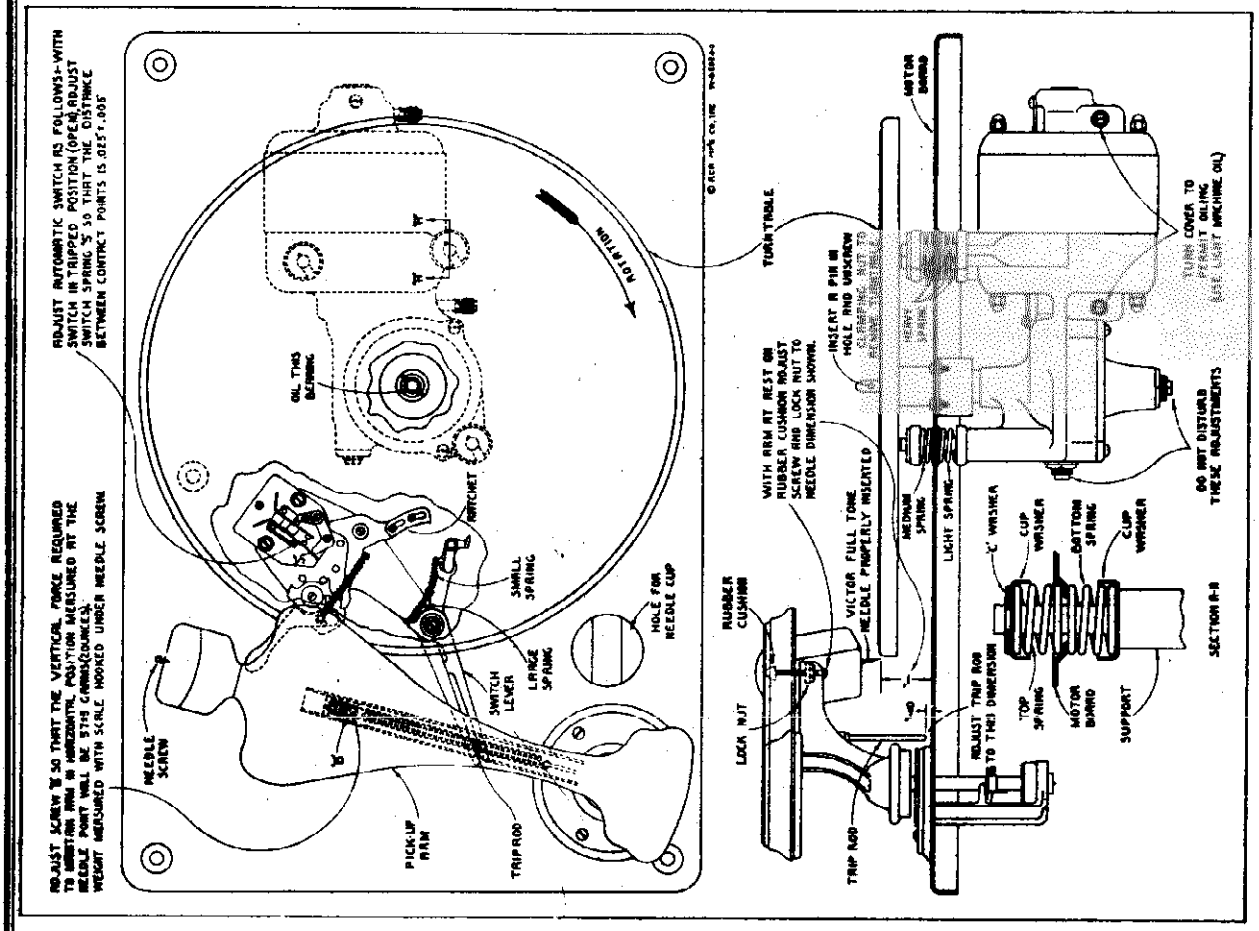

Figure 8—Motor Board Adjustments

©John F. Rider, Publisher

MODEL R-99
Circuit Data
Adjustments, Parts

RCA MFG. CO., INC.

General Description

The RCA Victor Model R-99 High-Fidelity Electrola comprises the ultimate in present-day record reproduction. It consists of the revolutionary dynamic expander; a high-quality, high-power output, power amplifier; a 12-inch, aluminum vuecoil, electrodynamic loudspeaker with a high-frequency tone diffuser; a light weight, high-fidelity pickup; an acoustically tapered volume control; a spring balanced tone arm; a powerful synchronous motor; and a high audio-frequency tone control. The instrument will play either 10- or 12-inch records.

Dynamic Amplifier

Limitations imposed by present methods of disc recording necessitate a constricted range of sound intensity which may be recorded. The maximum intensity of sound which may be recorded is determined by unavoidable record surface-noise which masks the recorded sound when such noise approaches the intensity of the noise. The maximum sound intensity which may be recorded is determined by the thickness of the record groove-wall into which the record cutting stylus makes an impression of the original sound. The amplitude of the lateral cutting is, therefore, regulated so that the stylus will not break over into the adjacent groove. It is because of these upper and lower limits that the volume range of sound reproduction cannot be identical to the original sound which is produced in the recording studio. In order to keep the recorded sound within the limits of the record, the recording control engineer regulates the recording amplifiers accordingly.

The dynamic amplifier of this reproducing instrument is designed to compensate for the above-mentioned recording limitations of volume range. It serves to restore the original intensity relations of the recorded sound by varying the amplification of the reproducing amplifier in direct accordance with the average intensity value of the sound. Thus, when there is a prevailing rise in the intensity of the recorded sound, the dynamic amplifier increases in gain accordingly, producing a further increase in volume, and conversely when there is a prevailing tendency toward a decrease of the recorded sound the dynamic amplifier decreases in gain, and produces a further decrease in volume. The functions of the dynamic amplifier are particularly advantageous in the reproduction of symphonic and certain other types of music where very great ranges of sound intensity are encountered. The dynamic amplifier causes the very loud or fortissimo, and the very soft or pianissimo passages to be reproduced in their natural relations, although they may have been somewhat muddled in the actual recording on the record.

Power Amplifier

In order that the dynamic amplifier may bring about its designed purpose, the amplifier and reproducing system into which it works must have an undistorted range of amplification consistent with the degree of volume expansion provided in the dynamic amplifier. The power amplifier is, therefore, designed to have a maximum output of 15 watts.

Loudspeaker

The 12-inch dust-proof electrodynamic loudspeaker provided with this unit is of massive design. It is constructed with an aluminum voice coil, which permits the weight of the moving unit to be greatly reduced, with consequent increase of the frequency range. A high-frequency tone diffuser is provided in front of the cone of the loudspeaker unit to disperse the higher frequency sound waves over a wide acoustic angle instead of being emitted in a concentrated beam directly in front of the unit.

Pickup

The magnetic pickup and tone arm assembly is of an improved design. It is constructed with a short and very light armature for the most delicate response. The tone arm is spring-balanced, allowing the effective weight of the pickup on the record to be materially reduced.

Electrical Circuits

The circuits consist of a phonograph pickup with compensating filters, dynamic expander stage, expander amplifier stage, expander diode-rectifier stage, audio driver stage, push-pull power output stage, and a full-wave rectifier.

The electrical impulses, generated in the pickup coil L1, are boosted in the input transformer T2 before they are fed to the dynamic amplifier. A compensation filter is placed in shunt with the output of T2 to correct the frequency response of the reproducing system so as to compensate for the recording characteristic.

Dynamic Amplifier

The signal from the input transformer T2 is supplied to control grid No. 1 of the RCA-6L7 (expander) through the economically tapered volume control R8, and is simultaneously applied through the expander control R14 to the control grid of the first RCA-6C9 (expander amplifier). The signal applied to the latter tube is first amplified and then fed to the RCA-6H6 (expander diode-rectifier) tube where it is rectified. The output of the RCA-6H6 is of the nature of a pulsating direct current, the amount varying in direct relation with the average value of intensity of the audio signal. This pulsating voltage appears across resistor R18 and is applied to the second control grid of the RCA-6L7 (expander) through a delay filter (R9 and C9). The value of the bias on this control grid determines the amplification of the RCA-6L7 expander stage. The gain of the dynamic amplifier is, therefore, automatically regulated by the average intensity of the audio signal.

Audio Driver

The audio output of the RCA-6L7 is resistance-capacitance coupled to the control grid of RCA-6C9 audio driver. The output of this tube is shunt fed to the primary of the interstage transformer T3 by means of the reactance L3 and blocking capacitor C11. This arrangement prevents the plate current of the RCA 6C9 from flowing through the primary of T3, omitting increased fidelity.

Power Amplifier

The audio signal developed across the secondary of T3 is applied to the control grids (push-pull) of the RCA 2A3 tubes for final power amplification. The bias for these control grids is developed across the loudspeaker field winding L8 and is applied through a suitable resistance-capacitance filter. The output of the power-amplifier stage is transformer-coupled to the voice coil of the electrodynamic loudspeaker.

Power Supply

The power-supply system consists of an RCA-1Z3 rectifier tube, which is supplied from an efficiently designed power transformer, and which works into a suitable filter. The potentials required for the plate, screen, control grid, and cathode circuits are obtained from this filter. The electrodynamic loudspeaker field coil is used as a filter reactor.

SERVICE DATA

The various diagrams in the booklet contain such information as will be needed to locate causes for defective operation if such develops. The values of various resistors, capacitors, coils, etc., are indicated adjacent to the symbols signifying these parts on the diagrams. Identification tubes, such as L1, C2, R1, etc., are provided for reference between the illustrations and the Replacement Parts List. The coils, resistors, and transformer windings are rated in terms of their d-c resistance only. Resistance values of less than one ohm are generally omitted.

Dynamic Amplifier Adjustments

It is essential that correct voltages and currents exist at the RCA-6L7 audio expander stage in order that the expanding function may take place in the proper manner. A screw-driver adjustment is accordingly provided to regulate the RCA 6L7 control grid No. 2 bias to the correct operating value. Two methods of adjustment are applicable. Either method requires a normal voltage of 300 volts across the filter output (resistor R22, see figure 7). The one to be preferred (a) requires the use of the RCA Stock No. 9633 Bass Frequency Oscillator or the equivalent, a 500-ohm resistor, a 200-ohm resistor, and a 1,000-ohm-per-volt a-c voltmeter (rectifier-type) having a low range of 10 volt and a high range of 250 volts or greater. The less accurate method (b) requires the use of the RCA Stock No. 12393 Split Fuse Adapter (supplied with instruments), and a suitable d-c milliammeter. Both of these procedures are outlined below. CAUTION: Before using either method, be sure that power-supply fuse is in proper position for the line voltage.

(a) **Preferred Method.**

Turn power switch (left front) off. Connect the 200-ohm and the 100-ohm resistors in series between the bass-frequency oscillator terminals (upper "240" and "CT") with the 100-ohm resistor connected to "CT". Calibrate the bass-frequency oscillator, adjust it to 1,000 cycles, and reduce its output. Connect the 1,000-ohm-per-volt a-c voltmeter (1-volt range) to the bass frequency oscillator terminals (upper "210" and "CT"). Remove the "M" plug from the "P" receptacle on the shielded cable running between the input transformer T1 and the compensator pack "Comp." (see figure 9). Connect bass-frequency oscillator terminal "CT" to the large pin on the "M" plug. Connect the junction of the 200-ohm and the 100-ohm resistors to the small pin on the "M" plug.

Adjust bass-frequency oscillator output until the voltmeter reads exactly 1.0 volt. Remove the voltmeter leads from bass-frequency oscillator terminals without disturbing any of the oscillator adjustments. Place the voltmeter to its 250-volt or greater range and connect it between the plate prongs of the two RCA 2A3 power-output tubes. Connections to the tube prongs may be made by stripping approximately ½ inch of insulation from the ends of two short leads of rubber-covered wire, wrapping one bare end around each plate prong (being careful not to allow the bare ends to short on the chassis when the tubes are placed in their sockets), and connecting the voltmeter to these leads. CAUTION: Do not touch these plate connections after the power is turned on, since the potentials at these points is rather high and exceedingly might result in a serious shock.

Set the expander "Dynamic" control (center front) to its extreme counter-clockwise position. Set the phonograph volume control (right front) to its extreme clockwise position. Turn on power switch (left front) and rotate this control to its extreme clockwise position, allowing it to remain in this position for all adjustments. Allow a few minutes for the instrument to become stabilized. Adjust the expander bias control R20, on rear apron of amplifier (see figure 9), until the voltmeter reads 190 volts. Turn phonograph volume control to extreme counter-clockwise position. Transfer lead from the junction of the 200-ohm and the 100-ohm resistors to the bass-frequency oscillator (upper "210") terminal without disturbing any of the oscillator adjustments. Adjust phonograph volume control (right front) until the voltmeter reads 90 volts. Turn the expander "Dynamic" control (center front) to its extreme clockwise position allowing maximum expansion to take place. The voltmeter reading should now read not less than 150 volts if the expander circuit is operating correctly. Failure to do so indicates a defect in the system and the usual service procedure should be followed.

(b) **Alternate Method.**

Turn power switch (left front) off. Place RCA Stock No. 12393 **Split Fuse Adapter** under the RCA-6L7. Connect a suitable d-c milliammeter to the adapter. Turn both the phonograph volume control (right front) and the expander "Dynamic" control (center front) to their extreme counter-clockwise positions. Turn on power switch (left front) and allow a few minutes for the instrument to become stabilized. Adjust expander bias control R20, on rear apron of expander (see figure 9), to give 1.0 milliampere of plate current with no signal input to the dynamic amplifier.

Magnetic Pickup

The pickup used in the phonograph unit is of an improved design. The horseshoe magnet is rigidly welded to the pole pieces and is irreversible. There is a centering spring attached to the armature to maintain proper adjustment and to provide a limiting effect on the movement of the armature. The frequency response is substantially uniform over a wide range. Service operations which may be necessary on the pickup are as follows:

Centering Armature

Refer to figure 4 showing the pickup inner structure. The armature is shown in its proper relation to the magnet pole pieces, i.e., exactly centered. Whenever this centering adjustment has been disturbed, the screws A, B, and C should be loosened and the armature clamp adjusted to the point where the vertical axis of the armature is at right angles to the horizontal axis of the pole pieces, and centered between them. This centering operation may be facilitated by inserting a small rod or rush into the armature needle hole, using it as a lever to test the angular movement of the armature. The limitations of the movement in each direction will be caused by the armature striking the pole pieces. The proper adjustment is obtained when there is equal angular displacement of the armature and adjustment rod or rush to each side of the vertical axis of the magnet and coil assembly. The screws A and B should then be secured, observing care not to disturb the adjustment of the armature clamp. Then place the pickup in a vise and secure the centering spring-clamp by means of the screw C, allowing the centering spring to remain in the position at which the armature is exactly centered between the pole pieces. With a little practice, the correct adjustment of the armature may be readily obtained. The air gap between the pole pieces and the armature should be kept free from dust, filings, and other such foreign materials which would obstruct the movement of the pickup armature.

Damping Block

The viscoloid block which is attached to the back end of the armature shank serves as a mechanical filter to eliminate undesirable resonances and to cause the frequency response to be uniform. Should it be necessary to replace this damping block, it may be done by removing screw D and the cover support bracket from the mechanism and taking off the old viscoloid block. The surface of the armature which is in contact with the viscoloid should be thoroughly cleaned with fine emery cloth. Then insert the new block so that it occupies the same position as it did originally. Make certain that the block is in correct vertical alignment with the armature. The hole in the new viscoloid block is somewhat smaller than the diameter of the armature in order to permit a snug fit. With the viscoloid aligned on the armature, screw D and the cover support bracket should then be replaced. Heat should be applied to the armature (viscoloid side) so that the viscoloid block will fuse at the point of contact and become rigidly attached to the armature. A special-tip soldering iron constructed as shown in figure 6 will be found very useful in performing this operation. The iron should be applied only long enough to slightly melt the block and cause a small bulge on both sides.

Replacing Coil

Whenever there is defective operation due to an open or shorted pickup coil, this coil may be replaced. The method of replacement will be obvious upon inspection of the pickup assembly and by study of the cut-a-way illustrations. Make sure that the new coil is properly centered with the hole in the support strip and glued securely in that position. It is important to re-adjust the armature as previously explained after re-assembly of the mechanism. Only rosin core solder should be used for soldering the coil leads to the pickup. Use same type of solder should be used when necessary for soldering the centering spring to the armature.

Magnetizing

Loss of magnetization will not usually occur when the pickup has received normal care because the magnet and pole pieces are one unit and the magnetic circuit remains practically closed at all times. When the pickup has been mishandled, subjected to a strong a-c field, jolted, or dropped, there may be an appreciable loss of magnetic strength, in which case it will be necessary to re-magnetize the entire structure. To do this, it will be necessary to first remove the pickup mechanism from the tone arm, and then remove the magnet assembly. Place the magnet assembly on the poles of a standard pickup magnetizer such as the RCA Stock No. 9540 Pickup Magnetizer and following the magnet in accordance with the instructions accompanying the magnetizer. It is preferable to check the polarity of the pickup magnet and to re-magnetize it so that the same polarity is maintained.

Phonograph Mechanism

The phonograph motor is of the synchronous type and is designed to be simple and foolproof. Under normal operating conditions, service attention should be negligible. However, if necessary, certain adjustments may be required. These adjustments are illustrated and explained in figure 8.

Loudspeaker

Centering of the loudspeaker voice coil is made in the usual manner with three narrow paper feelers after first removing the front paper dust cover. This may be removed by softening its contents with a very light application of acetone using care not to allow the acetone to flow down into the air gap. The dust cover should be cemented back in place with ambroid upon completion of adjustment.

REPLACEMENT PARTS

Stock No.	Description	List Price
14332	Resistor—22,000 ohms, carbon type, ½ watt (R9)—Package of 5	1.10
12487	Resistor—15,000 ohms, carbon type, ½ watt (R4)	.25
12286	Resistor—50,000 ohms, unshunted, ½ watt (R13)—Package of 5	1.20
12263	Resistor—10,000 ohms, unshunted, ½ watt (R15, R16, R17, R19)—Package of 5	1.00
13452	Resistor—150,000 ohms, unshunted, ½ watt (R7)—Package of 5	1.00
12283	Resistor—30,000 ohms, unshunted, ½ watt (R18)—Package of 5	1.00
12486	Resistor—60,000 ohms, unshunted, ½ watt (R8, R10)—Package of 2	1.00
6799	Resistor—3,250 or 3251 ohms, carbon type, ½ watt (R6)	.25
11197	Socket—4-contact (6C9 Reference socket)	.14
11190	Socket—7-contact (6H6 or 6L7 Reference socket)	.15
12964	Transformer—Interstage transformer (T3, L5)	3.00
12482	Transformer—Power transformer, 110-120 volt, 50-60 cycle (T1)	8.50
	MISCELLANEOUS CABLES AND PLUGS	
12547	Cable—2-conductor shielded pickup cable, 25 inches long, complete with two female connector, Stock No. 11488	.44
12488	Cable—Power cable, approximately 30 inches long, complete with two female connectors	.50
12263	Cable—Shielded 3-wire cable, approximately 9 inches long, complete with 4-contact male connector	.36
12564	Cable—Shielded tone control cable, approximately 20½ inches long, with 4-contact male connector	.34
12490	Cable—Shielded tone control cable, approximately 14 inches long, complete with female connector	.30
12342	Cable—Shielded volume control cable, approximately 30 inches long, complete with 3 male connectors	.30
12491	Cable—Shielded volume control cable, approximately 15 inches long, complete with 3 female connectors	.60
12493	Cable—Speaker cable, approximately 40 inches long, complete with female connector	.44
4674	Connector—2-contact male connector for volume control cable, input transformer cable, compensator cable, tone cable, tone control switch leads and indicator lamp cable (socket end)	.23
11488	Connector—2-contact female connector for pickup cable, Stock No. 11547, or indicator lamp cable (chassis end)	.14
4577	Connector—2-contact male connector for interlocked power leads	.30
11565	Connector—4-contact male tone control and input cable connector	.30
12367	Connector—5-contact male connector plug for reproducer housing	.22
4575	Connector—Power cable 2-contact female connector for power cable, speaker cable, expander cable	.30
12493	Connector—Speaker cable 5-contact female connector	.30
12494	Connector—Tone control or compensator cable 4-contact female connector	.18
	PICKUP AND ARM ASSEMBLIES	
12540	Armature—Pickup armature	.72
12542	Arm—Pickup arm, complete less pickup unit	6.50
11548	Bush—Pickup bush	.22
10941	Bush—Pickup arm pivot shaft bearing—Package of 20	.25
11543	Clamp—Pickup arm spring adjusting bracket and screw	.12
12541	Coil—Pickup coil (L1)	.64
5511	Cover—Pickup head cover with mounting screws	.16
11700	Cover—Pickup frame cover	.35
11830	Damper—Compound, cast upper damper and bushing assembly, cast lower bushing and cast lower bushing	.22
12534	Damper—Pickup damper	.16
2390	Escutcheon—Pickup arm escutcheon and screw	7.00
13550	Frame—Pickup frame	.16
12546	Plug—Pickup arm pivot shaft plug—Package of 10	.14
12545	Rod—Pickup arm strip and rod assembly	.36
11549	Screw—Pickup frame cover screw—Package of 10	.42
11539	Screw—Pickup needle cover—Package of 10	.20
5489	Screw—Pickup set and locking screw adjusting screw as used—Package of 10	.50
12544	Spring—Pickup arm adjusting spring—Package of 10	.22
12051	Transformer—2 MId. meter transformer, complete with cable and 3-contact male connector (CL)	6.18
9122	Cable—Radio output cable (long)—Package of 15	.30
	MOTOR ASSEMBLIES	
9693	Motor—105-125 volts, 50 cycles (M1)	48.85
9695	Motor—105-125 volts, 60 cycles (M1)	48.85
13551	Suspension spring and motor mounting assembly, complete, consisting of 4 springs, 8 cup washers, 1 spring washer and 3 studs	.45
	AUTOMATIC SWITCH ASSEMBLIES	
3944	Contact—Switch contact arm and screw	.28
10184	Plate—Automatic switch trip lever plate	.40
12370	Spring—Automatic switch operating—Package of 4	.16
12549	Switch—Automatic switch complete less knobs	3.54
3522	Switch—Stock code for automatic switch (S1)	.75
	REPRODUCER ASSEMBLIES	
8039	Board—Reproducer terminal board (3 terminals)	.14
8040	Bracket—Reproducer mounting bracket	.14
8036	Clamp—Cone rim clamp—Package of 3	.44
12366	Coil—Field coil, magnet and cone assembly (L8)	16.70
13474	Cone—Reproducer cone (L6)—Package of 3	6.00
12368	Fulcrum—Reproducer mount fulcrum	.75
12369	Reproducer—Reproducer, complete	18.15
12368	Transformer—Output transformer (T4)	3.36
	MISCELLANEOUS ASSEMBLIES	
12539	Antenna—Antenna coil	.40
12557	Base—Interlocked condenser base and spring assembly, consisting of 1 base, 1 spring, 1 condenser strap, 2 terminal mount, 1 lug strap, 1 lockwasher and 1 cap nut	.38
5215	Base—Reproducer mounting base assembly—Package of 3	.24
4584	Bush—Lead cable bush	.10
13109	Clip—Indicator lamp clip—Package of 5	.65
12361	Cup—Turntable spring cup	.15
8132	Clamp—Volume control set screw clamp—Package of 15	.30
4430	Clamp—Volume control nut clamp—Package of 10	.40
13560	Commutator Path—with 3 shielded cables, 1 male and 1 female connector molded (C6, C8, C9, L1, L3, L4, R1, R2, R3)	3.75
11580	Cover—Oscillator lamp cover	.12
11195	Cover—Reproducer cover	.85
12559	Cover—Turntable cover	.10
12535	Expander (Dynamic) (R14)	1.20
11547	Knob—Expander, tone and switch knob—Package of 5	.75
5228	Lamp—Indicator lamp—Package of 5	.70
5518	Lamp—Miniature lamp—Package of 5	.52
5515	Mounting—Volume control set screw mounting—Package of 5	.35
11101	Mounting—Volume control mounting	.36
12365	Spring—Retaining spring for knob, Stock No. 12547	.15
12553	Spring—Volume control spring (R8)	.12
12553	Switch—Expander switch assembly with 2 shielded cables, 1 male and 1 female connector, molded (T5)	6.00
11536	Turntable—Complete	2.45
12554	Volume Control (R14)	1.55
	AMPLIFIER ASSEMBLIES	
11550	Cap—Grid connect cap—Package of 5	90.20
12110	Cap—Top shield cap for 6L7 tube	.10
12488	Capacitor—270 MMfd (C11, C13)	.36
5107	Capacitor—.0025 MFd (C14, C16)	.36
4644	Capacitor—.005 MFd (C6, C7)	.36
5190	Capacitor—.015 MFd (C18)	.36
4686	Capacitor—.05 MFd (C5)	.36
4518	Capacitor—.01 MFd (C4)	.36
5170	Capacitor—.25 MFd	.36
4640	Capacitor—.1 MFd	.36
11540	Capacitor—.5 MFd	.36
11473	Capacitor—10 MFd	.36
5113	Capacitor—18 MFd (C8, C9)	.36
11496	Capacitor—25 MFd	.36
12538	Capacitor—50 MFd	.36
12537	Capacitor—100 MFd	.36
12536	Capacitor—Electrolytic condenser unit, consisting of 1 can, 1 mounting clamp, 1 lug strap, 1 lockwasher and 1 cap nut	1.50
12533	Choke—Volume control set expander choke	.30
5238	Cover—Tube cover	.35
12468	Expander—Complete (R10)	1.00
10909	Fuse—3-ampere fuse (F1)—Package of 3	.90
5239	Mounting—Tube mounting	.16
13451	Shield—Transformer plate mounting assembly, less socket	.15
12466	Socket—Fuse receiver (L2)	2.35
12206	Resistor—270 ohms, unshunted, ½ watt (R6)—Package of 5	1.00
12195	Resistor—2,500 ohms, unshunted, ½ watt (R11, R13)—Package of 5	1.00
12468	Resistor—4,600 ohms, wire wound (R12)	1.55
11298	Resistor—1,000 ohms, carbon type, 1 watt (R21)	.35

The power specifications shown are subject to change without notice.

Electrical Specifications

Electron Complement	(4) RCA-2A3	Power Output
	(1) RCA-6L7	Input Amplifier
	(1) RCA-6C9	Expander Amplifier
	(2) RCA-6H6	Full-Wave Rectifier
	(1) RCA-1Z3	

Mechanical Specifications

Height	34 inches
Width	25½ inches
Depth	14½ inches
Weight (net)	116 pounds
Weight (shipping)	135 pounds
Overall Cabinet Dimensions	46½ inches x 25½ inches x 34 inches
Operating Controls	(1) Power Switch—Tone, (1) Dynamic Expander, (3) Volume

©John F. Rider, Publisher

MODEL R-78 with Noise Suppressor

RCA MFG. CO., INC.

Schematic, Voltage Alignment, Notes

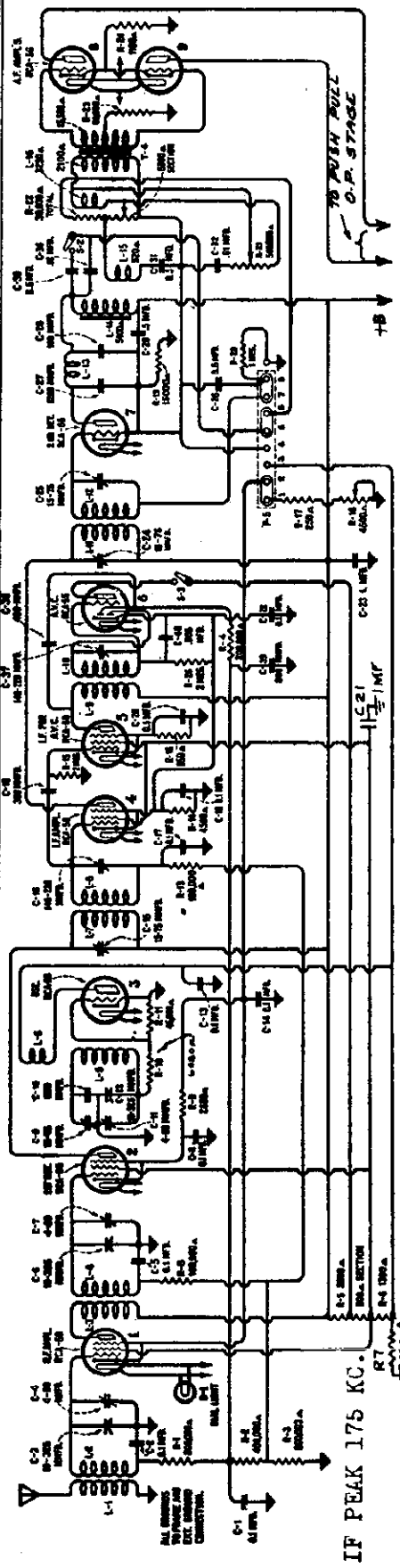

RCA R-78 with Noise Suppressor

The schematic diagram, showing the inclusion of noise suppression to the early Model R-78, is shown in the accompanying illustration. If you will compare the schematic diagram of the R-78 that is shown on *RCA page 3-38 of Rider's Volume III and on page 1910 of the Rider-Combination Manual*, with the one given herewith, it will be seen that the 56 AVC tube in the early model has been replaced with a 55 tube and the values of several resistors have been changed. The power pack and output stage is the same in each case.

The untuned i-f. transformer used in the older model has been changed to a natural period plate coil, L-9, and a sharply tuned secondary coil, L-10. Coil L-9 supplies the voltage to operate the AVC circuit and L-10 supplies that used to operate the suppressor circuits. An examination of this circuit will show that with no signal voltage impressed on coil L-10, no current is rectified in the diode plate and hence the grid of the 55 tube operates at zero bias. The plate current is then at maximum—about 10 ma.—and since the cathodes of the 55 tube and the signal channel i-f. tube are common, the i-f. tube is biased to cutoff. This prevents signal voltage from reaching the second detector.

When the set is tuned to a signal, the signal voltage is amplified in the AVC amplifier and impressed on L-9 and L-10. On the positive half of the signal voltage, the signal is rectified in the suppressor circuit which generates a negative potential on the grid of the 55 tube. The plate current is thereby reduced to nearly zero, which releases the high bias potential on the signal channel i-f. amplifier. Signal voltage will then be impressed on the second detector.

AVC bias for the r-f., first detector, and i-f. tubes will be generated when the i-f. voltage on the AVC diode overcomes and exceeds the positive potential on the cathode of the 55. This bias is about 10 volts when the set is tuned to a signal.

The sensitivity control is in the cathode circuit of the r-f. and first detector tubes and is indicated as R-18 on the diagram. The sensitivity of the set is reduced by increasing the residual bias on these two tubes, i.e. the first two 58's in the set. One end of the sensitivity control has a switch, S-3, which is provided so that the noise suppressor circuit may be cut out, then the full sensitivity of the set is obtained.

Alignment:

Remove the oscillator tube and ground the chassis. Couple the output of the test oscillator, set to 175 kc., the i-f. peak of the set, from the control grid of the first detector to ground. With the receiver volume control at maximum, the noise suppressor control at its extreme counter clockwise position, and the noise suppressor switch open, adjust the oscillator output until a deflection is obtained in the output indicator.

Adjust the secondary and primary of the second and then the first i-f. transformer, until a maximum deflection is obtained. Check the adjustments.

Then close the noise suppression control switch by advancing slightly clockwise, but do not advance the control beyond the snapping of the switch. The single noise suppressor circuit should then be adjusted for maximum output. Keep the input signal as low as possible so that every change can be followed in the output indicator.

For other adjustment data and notes that apply to this model see *pages 3-39 and 3-41 in Rider's Volume III and pages 1911 and 1913 in the Rider-Combination Manual.*

Voltage Data:

Below will be found the voltage data for the R-78 with noise suppression. Note that the line voltage is 120. The antenna is shorted to ground and no signal.

Tube	Function	Cath. to Cont. Grid	Cath. to Screen	Cath. to Plate	Diode Plate No. 1 to Cath.	Diode Plate No. 2 to Cath.	Plate MA.
58	R.F.	- 3.5	106	212	–	—	6.5
56	Osc.	—	—	65	–	—	4.5
58	1st Det.	- 9	101	206	–	—	1.8
58	I.F.	-12	98	203	–	—	2.0
58	AVC I.F.	- 5	106	210	–	—	4.0
55	AVC Sup.*	0	—	0	0	-12	0
55	AVC Sup.**	0	—	69	0	36	8.0
56	2nd Det.	-15	—	200	–	—	1.0
56	Driver	-11	—	204	–	—	5.0
46	O.P.	0	0	400	–	—	6.0
82	Rect.	462.5 volts R.M.S. each plate. 72 ma. total plate current.					

* Sensitivity control at minimum.
** Sensitivity control at maximum.

©John F. Rider, Publisher

RCA MFG. CO., INC.

* Set output volts to 135—no load with 90-volt switch "on"

All D. C. voltages are to ground except heaters—Voltages are with 180-volt, 50 M. A. load, 90-volt switch "off"—Input voltage 115 volts, 60 cycles—transformer on 110-volt tap.

Voltages at Radiotron Sockets

CAUTION

When using the TMV-118-B power unit with devices having filter capacitors, it is desirable to have a switch between the power unit and the device to open the circuit during a 30-second warming-up period. During this warming-up period, the output voltages may be high and unless the filter or by-pass capacitors are conservatively rated, premature failure may result.

(1) EXCESSIVE HUM

Excessive hum may be caused by operating the TMV-118-B beyond the limits of its capacity. A reference to the curves shown in Figure 4 shows the safe limits and regulation to be expected for such operation. A good test for maximum load is maximum permissible hum. Excessive hum with the equipment in normal condition is an indication of excessive load.

Excessive hum accompanied by high voltage is caused by a defective Radiotron RCA-57.

Excessive hum accompanied by normal voltage is an indication of a defective capacitor C-3.

(2) LOW VOLTAGE

Low voltage may be caused by a low emission Radiotron RCA-80 or RCA-2A3.

(3) HIGH VOLTAGE

High voltage may be caused by a defective Radiotron UX-874 or, if accompanied by hum, a defective RCA-57.

(4) VOLTAGE READINGS

The voltages shown on Figure 4 are those at which the various tubes operate. When taking readings, suitable allowance must be made for the load of the meter.

(5) VOLTAGE REGULATION

Figures 6 to 11, inclusive, show the voltage regulation of the TMV-118-B over a wide range of line voltages, load current and output voltage conditions. A reference to the charts should be made to ascertain the regulation for any given condition, prior to placing the unit in operation.

MODEL TMV-118-B
Chassis Wiring
Transformer, Data
Regulating Circuits

RCA MFG. CO., INC.

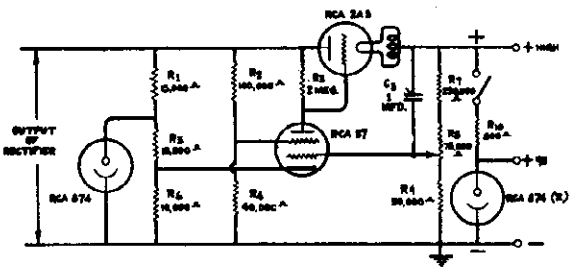

Figure 3—Voltage Regulating Circuits

The RCA Regulated Power Unit, Type TMV-118-B, is a device for converting the usual alternating current line power into direct current suitable for use with devices normally requiring "B" batteries. The voltage regulation is better than that obtained from a set of heavy-duty batteries while the hum is negligible. A special regulating circuit maintains constant output voltages independently of line or load variations over a wide range. A general view of the external appearance of the TMV-118-B Power Unit is shown in Figure 1.

The RCA-874 is a gaseous tube of two elements, using either Neon or Argon. The tube functions to maintain a fairly constant voltage (90 volts) across a circuit, independently of load due to the fact that its resistance varies with the voltage across its terminals. The tube requires 125 volts for starting and maintains an approximately constant D. C. voltage across its terminal for any current from 10 to 50 milliamperes. A link circuit is provided by having two of the tube prongs tied together so that the power circuit may be wired through this link. This prevents power from being applied to the unit without the RCA-874 in place. Excessive voltage might otherwise occur if such a condition existed due to absence of the load of the regulator tube.

A. C. Input Voltage Rating ..... 90–130 Volts
Frequency Rating ..... 50–60 Cycles
Power Consumption ..... 70 Watts

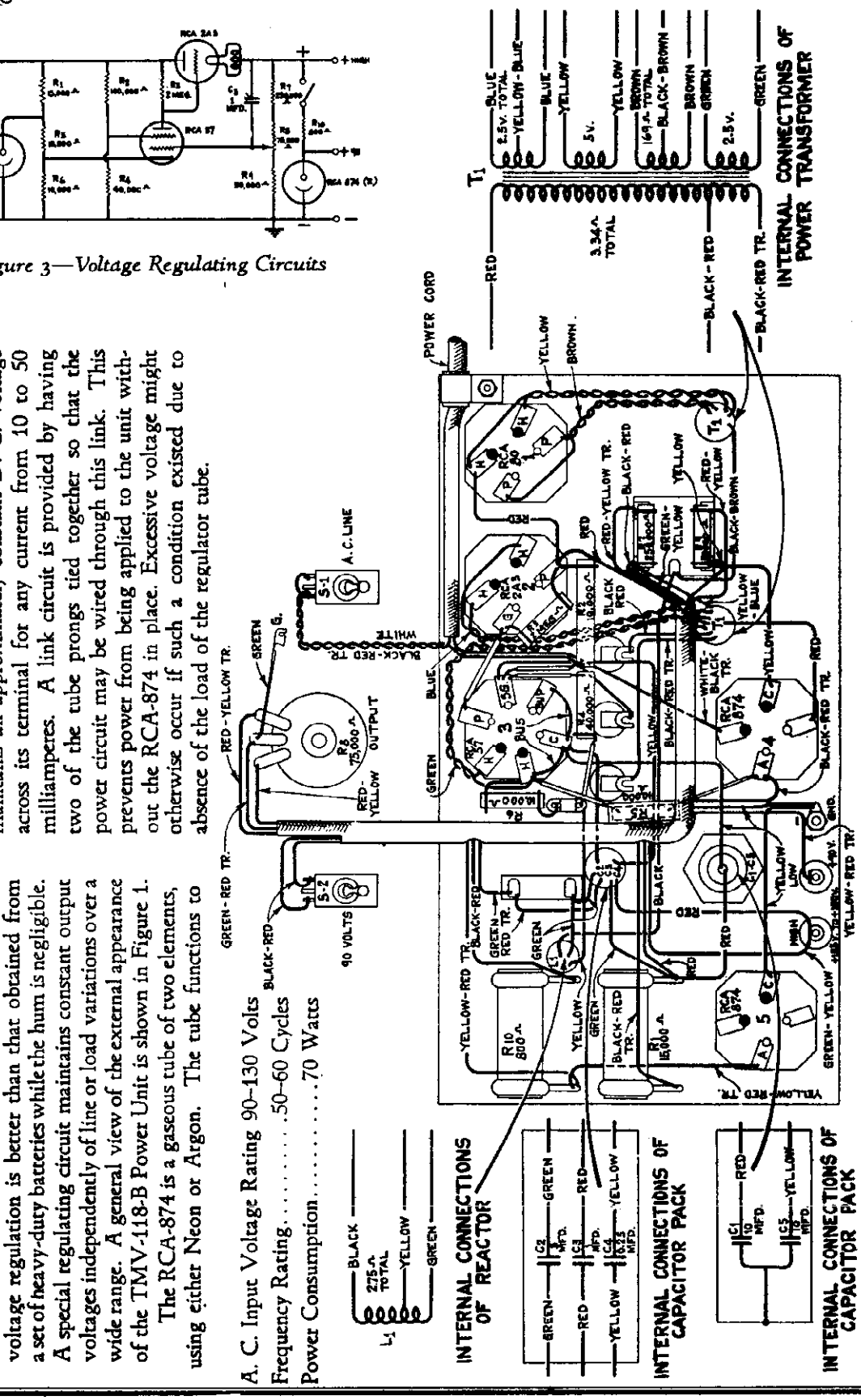

Figure 5—Wiring Diagram

©John F. Rider, Publisher

INTRODUCTION

The Type TMV-128-A Frequency Modulator is a levice for use with a test oscillator (such as the TMV-97-C or similar) to "sweep" the oscillator frequency and at the same time provide a voltage for synchronizing the timing axis of a cathode-ray oscillograph (such as the TMV-122-B) with the position of the sweep condenser. It consists of a driving motor coupled to a sweep condenser and an impulse generator. Two ranges of sweep capacity are provided, as listed below, and a cable fitted with plugs at each end is furnished for connection to the test oscillator. The unit operates entirely from a 110/120 volt, 50/60 cycle a-c supply.

INSTALLATION

Figure 1 shows the interconnections of the Frequency Modulator with the TMV-97-C Test Oscillator and Cathode-Ray Oscillograph, Type TMV-122-B. This arrangement is commonly used for making r-f and i-f alignment of a radio receiver. For other applications, this set up may be modified according to the requirements of the particular case.

OPERATION

When the units are properly interconnected, select the "Hi" or "Lo" position of the range switch according to the percentage sweep desired (see the curve on the back of this sheet), and turn the motor "On." When through operating, turn the motor switch to the "Off" position.

MAINTENANCE AND SERVICE

Specifications

Power Supply Voltage and Freq.	110/120 Volts, 50/60 Cycles
Power Consumption	25 Watts
Drive Motor	Shaded Pole-Induction; 1/200 HP.
Drive Motor Speed	1550 R.P.M.
Sweep Condenser Capacitance	High Range—25 to 70 Mmfd. Low Range—15 to 37 Mmfd.
Connection Cable Capacitance	40 Mmfd.
Impulse Generator Output	1.5 Volts
Over All Dimensions	Height, 8½ Inches Width, 9¼ Inches Depth, 4½ Inches
Weight	5¼ Pounds

Bearing Lubrication

The small induction drive motor has oil holes at each of its waste-packed bearings. Light engine oil should be used at these points. A ball-bearing support is used at the impulse generator. It is packed with "vaseline," which should be replenished after every 100 hours of operation.

Sweep Condenser

This element of the assembly consists of two conventional type rotary condensers, each having a single rotor plate attached to a revolving shaft. The stators are wired so that one remains connected at all times and a switch is used to parallel the two in order to increase the range of sweep.

The rotor plates should be exactly centered between the stator plates when the mechanism is operating at its normal speed (1550 r.p.m.). If the plates change their relation, they should be re-centered by adjusting the drive shaft in the coupling, or shifting the rotor plates on the shaft. The line-up of the rotor plates in respect to the armature of the impulse generator is important in that it governs the synchronization of the system. The proper adjustment is obtained when the two rotor plates are either at maximum or minimum capacitance, and the armature sets horizontal (air gap minimum). A slight shift may be necessary to center the resonance curve on the screen of the TMV-122-B.

Impulse Generator

A small induction generator is used to furnish means of controlling the frequency of the "Saw Tooth Oscillator" of the Oscillograph. It is necessary to maintain a definite polarity on the output connec-

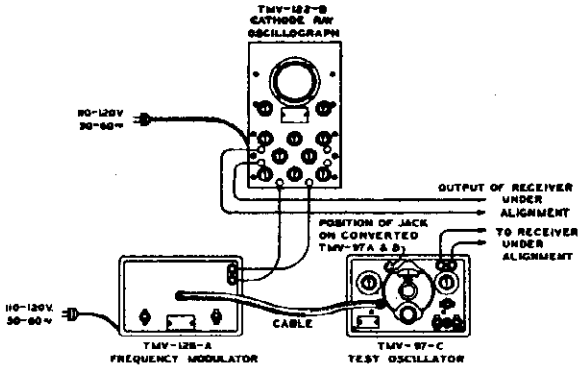

Figure 1

tions of this generator. The horse-shoe magnet should therefore be replaced as originally installed, if it has been removed for repair or service. It is also important to retain the original relation of the coils. Correct polarity exists when a positive swing is obtained on a 200 microampere d-c meter with its plus terminal connected to "high," and the mechanism rotated by hand in such a direction as to cause a decrease in air gap.

Mechanical Alignment

The drive motor, sweep condenser and impulse generator must be in correct physical relations to each other, inasmuch as they all rotate on the same shaft. The motor mounting screws are arranged to permit small lateral adjustments of the motor position. Both the stator and rotor plates of the sweep condenser may be adjusted to obtain the correct centering alignment. End-play of the shaft should be kept at a minimum without affecting the freedom of rotation.

Brush Connection

The point of contact between the revolving shaft and the brush of the sweep condenser circuit should be kept clean at all times. No oil or dirt should be allowed to accumulate. Poor contact is evidenced by ragged wave form on the oscillographic image.

©John F. Rider, Publisher

MODEL TMV-128-A
Schematic, Wiring
Characteristics
Parts List

RCA MFG. CO., INC.

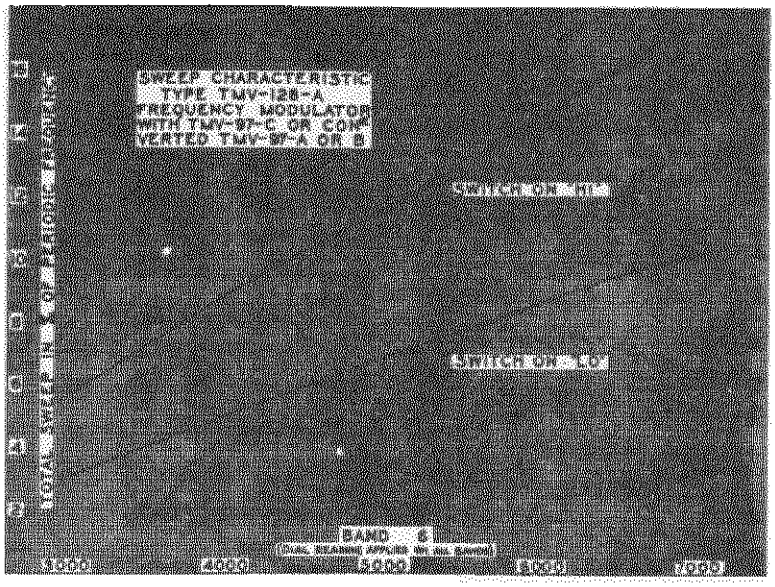

Figure 2—Sweep Characteristics of TMV-128-A with TMV-97-C

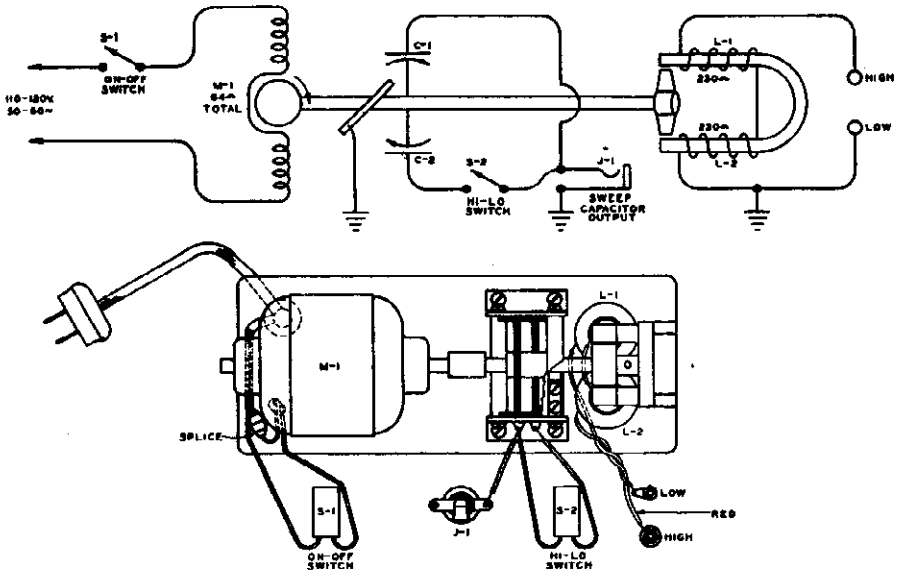

Figure 3—Schematic and Wiring Diagrams, Type TMV-128-A Frequency Modulator

REPLACEMENT PARTS

Insist on genuine factory tested parts, which are readily identified and may be purchased from authorized dealers

Stock No.	DESCRIPTION	List Price	Stock No.	DESCRIPTION	List Price
	FREQUENCY MODULATOR (TMV-128-A)		7899	Coupling—Motor coupling	$0.25
			7901	Escutcheon—Off-On switch escutcheon	.28
			7902	Escutcheon—High-Low switch escutcheon	.28
7905	Brush—Grounding brush—Package of 5	$0.85	7903	Jack (J1)	.45
7907	Cable—Connector cable with two plugs	1.50	7898	Motor—Motor complete (M1)	12.00
7909	Case—Case complete—Less binding posts, jack, switches and chassis	6.70	7908	Plug—Cable plug	.68
			7906	Post—Binding post engraved "High"-"Low"	.45
7904	Coil—Impulse coil (L1, L2)	1.25	7900	Switch—Toggle switch (S1, S2)—Off-On, High-Low—Less escutcheon	.75

©John F. Rider, Publisher

©John F. Rider Publisher

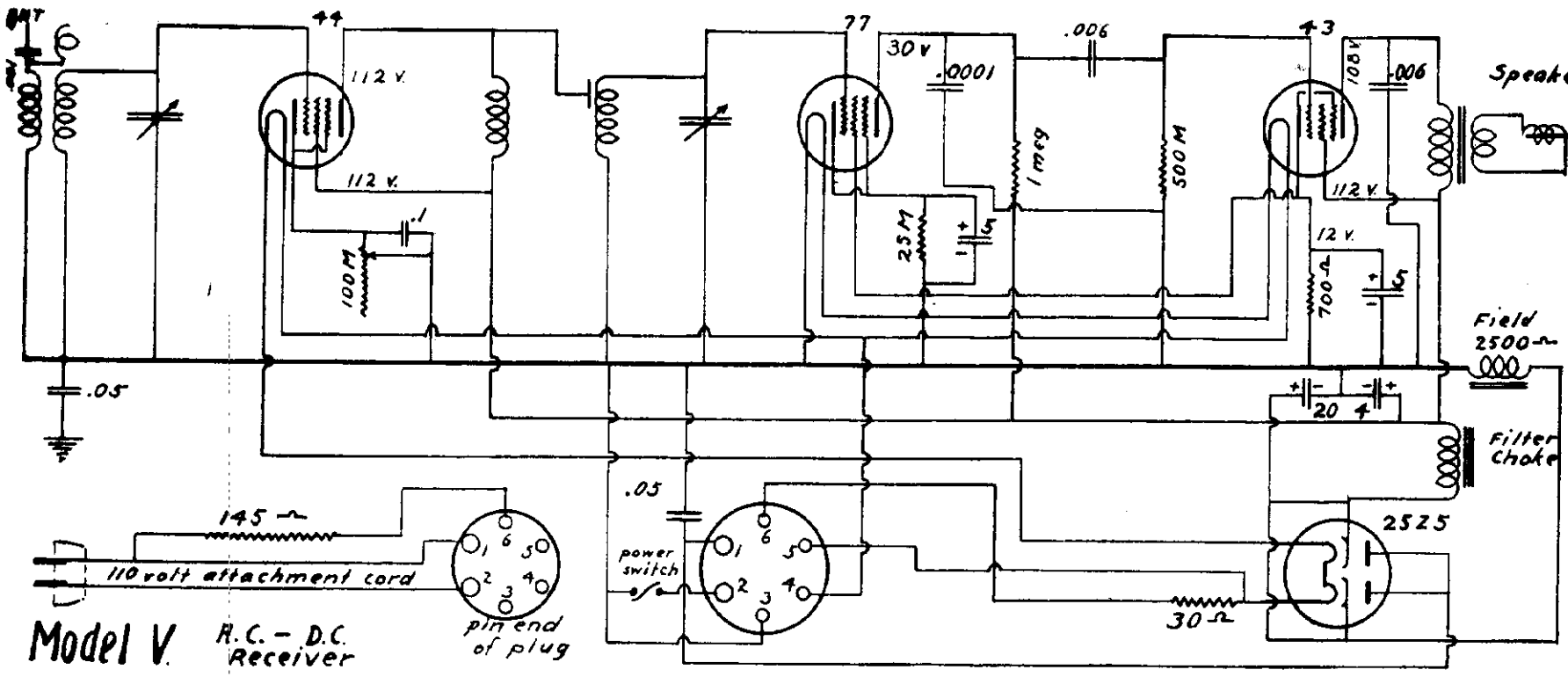

CAUTION:

This instrument is equipped for operation on 110 volts D. C. or A. C., any frequency from 25 to 133 cycles per second. Before attempting to operate on any other voltage be sure that the proper adaptors are connected and the instructions accompanying them are understood. Special adaptors can be secured from the factory at a slight extra cost, for operating this receiver on automobiles, 32 volt farm light plants and 200 volt A. C. or D. C. ALWAYS plug cord into back of set before plugging into power supply. Cord for 110 volt or 220 volt heats moderately, as the cord contains resistance necessary for operation at these voltages. The 20 ft. aerial wire extending from the back of the set should be unwound, laid out along the floor or hung outside a window and is ordinarily all the aerial required. No ground connection should be used. Sometimes results are better if the tip of the antenna wire is connected to a radiator or other ground connection or to an outside aerial.

PHONOGRAPH:

Connect pick-up leads to single pole toggle switch, which may be mounted in large hole in rear flange of set. Unsolder black wire and 5 mfd condenser from ground lug of coil on under side of chassis and resolder to one side of toggle switch. Solder other side of switch to ground lug of coil.

SERVICE NOTES:

To remove set from cabinet, disconnect from power supply, remove knobs, remove back if compact model, and unscrew the four felt headed screws on bottom of cabinet.

To balance set remove from cabinet, turn tuning condenser plates completely out, attach a test oscillator delivering 1712 K. C. to antenna of set and adjust trimmers on tuning condenser to loudest signal. Change test oscillator signal to 1400 K. C., turn tuning condenser until signal is tuned in and check trimmers again without moving tuning condenser.

If used in automobiles antenna stage should be trimmed to the car antenna at time of installation.

MODEL W, Worldwide
Schematic, Notes
Voltage, Alignment

RADIO CIRCULAR

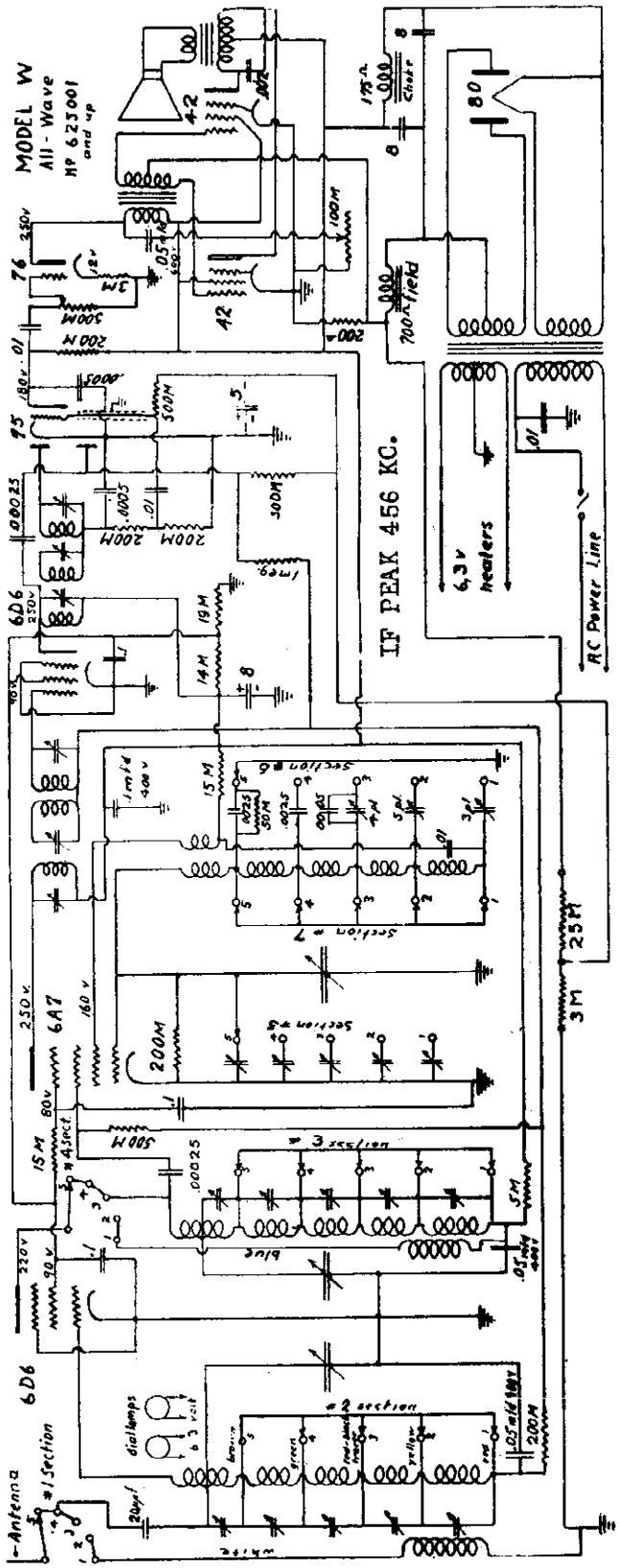

MODEL W WORLDWIDE

CAUTION—Do not attempt to operate on current other than that noted on the instrument.

INSTALLATION—A good aerial, 25 to 50 feet long, well away from surrounding metal structures and power lines, is essential for best results. Power noise interferes especially with short-wave reception. If the set is located where power noise is prevalent it may be necessary to install an aerial high above the street and use a "transposition" lead-in to the set. A good ground connection (water pipe or equivalent) will also contribute to quieter reception.

CONTROL KNOBS—The left hand knob is, initially, the power switch and thereafter, tone control. The second knob from the left is band selector switch. The third knob from the left is tuning control. The right hand knob is volume control.

OPERATION—After the set has been properly installed by the attachment of suitable aerial and ground connection and the power cord plugged into an outlet of the proper voltage, the left hand knob is turned to the right and a few seconds allowed for the tubes to reach operating temperature. The second knob has five positions, each corresponding to one of the numbers as shown on the dial. The volume control knob is turned full to the right and then the tuning knob turned slowly until the desired station is heard. Note that each frequency band is indicated on the dial by a number corresponding to the various positions of the band selector switch, and also that in connection with each band, there is shown on the dial the type of station that may be tuned in.

SERVICE NOTES—If the radio fails to operate when unpacked, or stops working after a few days, proceed as follows: (1) Have the tubes checked. (2) Remove the chassis from the cabinet and check for loose connections. (3) Have a competent "Radio Service Man" check over entirely. Do not return unless you have made the above tests. This set left the factory carefully inspected.

The intermediate stages are carefully phased to 456KC at the factory. Should rephasing be necessary attach the output lead from a 456 KC test oscillator to the grid cap of the 6A7 tube, keep the signal to a very low audible value and carefully adjust the three trimmer screws, two in the top and one in the bottom of each of the two tall cans, to loudest volume. If an output meter is available it should be used across the two outside black leads at the speaker transformer. An all-wave oscillator having a range from 160 KC to 20 MC will be necessary to rephase the frequency bands. The oscillator output is attached to the aerial lead of the set and the oscillator output kept always at a low audible level. The R. F. coil trimmers are reached through a series of five (5) holes in the side of the R. F. shield cans and correspond to frequency band Nos. 1, 2, 3, 4, and 5, from top down. The oscillator parallel trimmers are seen on the under side of the set when the front of it is raised and are located alongside of the band switch, No. 1 being the one nearest the back of chassis and No. 5 nearest the front. The dual porcelain trimmers at back of chassis are series padders, the left hand for band No. 2 and the right hand one for band No. 1. The series padder for band No. 3 is the single trimmer at the center of the chassis. Each band is trimmed first at the minimum end of its range, band No. 5 being first, No. 4 second, then No. 3, etc. Bands 3, 2, and 1 are also tracked near their maximum ranges, or with the tuning condenser turned well in, by adjusting that series padder belonging to the particular band being used, location of which is given above.

NOTE—Should it be necessary to write to the factory for parts or information, always give the serial number of the set as stamped on the back of the chassis.

PHONOGRAPH—Install a single pole double throw toggle switch in rear flange of chassis near right-hand end. Disconnect .01 mfd condenser from volume control and connect to one side of switch, connect volume control to center terminal of switch, connect one side of phonograph pickup to other side of switch and remaining pickup terminal to remaining outside volume control terminal.

SHORT WAVE TIPS—In listening for short-wave broadcast DON'T forget to consider the difference in time between the location of the broadcaster and the receiver. DON'T expect to hear a station because it is on the air, as many things govern short-wave reception. DON'T get discouraged if reception is poor one night; it may be fine the next. DON'T expect stations to tune broadly; most stations tune sharply. DON'T tune below 10,000 kilocycles (above 30 meters) for distant stations in daylight. DON'T expect to find stations on all parts of the dial. Short-wave stations are widely separated, except in a few instances. DON'T skim over the dial. It requires some knowledge of tuning to get good results. Tune very slowly. DON'T pass up any weak signal, as it may often be brought in stronger by careful tuning.

©John F. Rider, Publisher

Socket, Trimmers

RADIO PRODUCTS CORP.

MODEL 5-Tube AC Super.
Chassis A-1
Schematic, Voltage

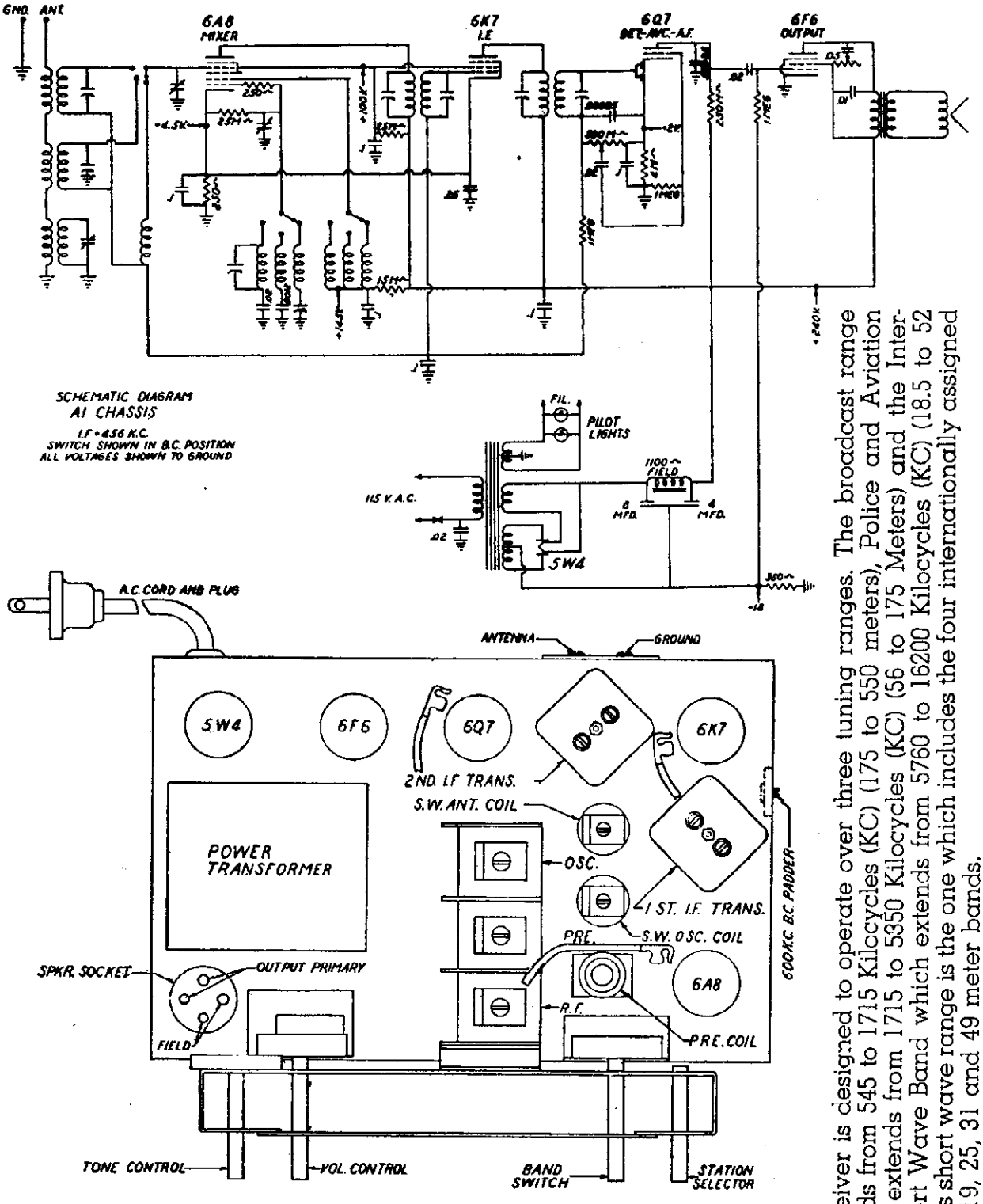

Five Tube A.C. Superheterodyne
A1 Chassis

This receiver is designed to operate over three tuning ranges. The broadcast range which extends from 545 to 1715 Kilocycles (KC) (175 to 550 meters), Police and Aviation Band which extends from 1715 to 5350 Kilocycles (KC) (56 to 175 Meters) and the International Short Wave Band which extends from 5760 to 16200 Kilocycles (KC) (18.5 to 52 meters). This short wave range is the one which includes the four internationally assigned bands—the 19, 25, 31 and 49 meter bands.

©John F. Rider, Publisher

MODEL 5-Tube AC Super
Chassis A-1
Alignment, Parts List

RADIO PRODUCTS CORP.

ALIGNMENT DATA AND SERVICING

GENERAL DATA The alignment of this receiver requires the use of a test oscillator that will cover the frequencies of 456, 600, 1400, 1800, 4000, 6000, and 14,000 KC and an output meter to be connected across the primary or secondary of the output transformers. If possible, all alignments should be made with the volume control on maximum and the test oscillator ouput as low as possible, to prevent the AVC from operating and giving false readings.

CORRECT ALIGNMENT PROCEDURE The intermediate frequency (I.F.) stage should be aligned properly as the first step. After the I.F. transformers have been properly adjusted and peaked, the Broadcast Band should always be the next procedure; after which, either or both of the Short Wave Bands may be aligned.

I.F. ALIGNMENT Adjust the test oscillator to 456 KC and connect the output to the grid of the first detector tubes (6A7) through a .05 or .1 mfd. condenser. The ground on the test oscillator can be connected to the chassis ground. Align all four I.F. trimmers to peak or maximum reading on the output meter.

BROADCAST BAND ALIGNMENT Adjust the oscillator to 1400 KC and connect the output to the antenna post marked "A" through a .0001 mfd. mica condenser to give the equivalent of an antenna about 60 feet. Set the receiver pointer to 1400 KC and adjust the rear gang condenser trimmer (oscillator circuit) to peak. After this has been carefully done, the next step is to adjust the center and front trimmers of the gang condenser to peak. The front gang section tunes the R.F. or grid coil of the 6A8 tube and the center condenser section tunes the pre-selector stage circuit.

Next, re-set the dial pointer on the receiver and the test oscillator to 600 KC. Slowly increase or decrease the oscillator padding condenser and at the same time continuously tune back and forth across the signal with the receiver until the maximum reading is obtained on the output meter. This adjustment seems a little complicated but is the easiest way to adjust the oscillator to the pre-selector or R.F. section. The padding condenser is located on the right hand end of the chassis near the 6K7 tube.

Return to 1400 KC and again go over the adjustments of this frequency to be certain that they were not put slightly out of alignment when adjustment was made at 600 KC.

This completes the correct sequence of operations in properly aligning the receiver for the Broadcast Band, and **must always be done before** attempting to align the Short Wave Bands.

FOREIGN BAND The Foreign Band of 18 to 49 meters can be adjusted by the two trimmers on the short wave coil located on the top of the chassis. Set the test oscillator to 14,000 KC. The oscillator coil is located nearest the front of the chassis and the antenna or R.F. coil is located directly in back of the Short Wave oscillator coil. These two trimmers should be adjusted for peak at 14,000 KC and as the inherent design of the circuit has been expressly designed for simplicity in servicing, no other adjustments are necessary for aligning this band. **Note:** Always start this procedure by having the oscillator coil trimmer loose (out all the way), and the antenna coil trimmer fairly tight (in all the way); otherwise it is possible to make a false alignment on the image frequency.

Important: Do not attempt any adjustment of the gang condenser trimmers in aligning the Foreign Band as this will throw the Broadcast Band out of alignment.

POLICE BAND There is only one adjustment to be made in the alignment of the Police Band. Due to the circuit design and correct matching of the coils, no oscillator adjustment is necessary.

Set the dial pointer to 4000 KC (also the test oscillator) and adjust the antenna coil trimmer to resonance. The two police band coils are under the chassis, but the antenna coil trimmer for this band is on top of the chassis and is located at the right front corner along side of wave band switch.

Important: This is the only adjustment necessary for the Police Band. Do not attempt any adjustment of the gang condenser trimmers in aligning the Police Band, otherwise the Broadcast Band will be thrown out of alignment.

49 METER BAND The popular 49 meter band is the area adjacent to the 6 megacycle calibration and offers the most consistent reception from Italy, Germany, Africa and Java. This area also affords the most popular reception of North and South American Short Wave Broadcasts and many other Foreign Countries. (Best evening reception all year round.)

31 METER BAND The 31 meter band is the area extending from 9 to 10 megacycles and lists Spain, Italy, Portugal and Australia as the most favorable of the Foreign Countries in this range. (Late afternoon and early evening.)

25 METER BAND The 25 meter band is the area adjacent to the twelve megacycle calibration and associates itself with the listing of Russia, France, England and Holland. (Late afternoon and early evening. This band is unusually free from static during the summer months when maximum static is prevalent on the Standard Broadcast Band.)

19 METER BAND The 19 meter band is the area extending from the 15 megacycle calibration and lists France, Holland, England and Amateur phones. This band offers the least possibilities for satisfactory reception due to the unreliable character of this particular frequency.

STANDARD BROADCAST BAND (White Scale) (175 to 550 Meters)—The upper white scale is calibrated from 55 to 170 (Standard Broadcast). This scale, by adding mentally an "0," gives a correct accurate calibration reading from 550 to 1700 kilocycles (KC).

This band covers all Standard Broadcast frequencies of the United States, Canada, Mexico, Cuba and many Central and South American Countries; also the popular 1712 kilocycle (KC) Police Band.

POLICE BAND (Red Scale) (55 to 175 Meters)—The scale is graduated from 450 to 170, which also reads directly in kilocycles (KC) by adding an "0" mentally. This scale covers reception of Short Wave Police Bands, Airplanes, Amateurs, and Ships at Sea.

FOREIGN AND AMERICAN SHORT WAVE BAND (Green Scale) (18.5 to 52 Meters)—The entire lower half of the scale is devoted to this band which covers the Foreign and American Short Wave Broadcasts. This scale is numerically graduated from 6 to 15 megacycles. Mentally adding three "0s" converts megacycles to kilocycles (KC); i.e., 6 megacycles equals 6,000 kilocycles (KC) and 15 megacycles is equivalent to 15,000 kilocycles (KC).

ANTENNA

An antenna post is provided for the use of a regular antenna. Any of the doublet or transmission line types may be used.

DOUBLET OR TRANSPOSED LEAD-IN TYPE An antenna post is provided for the use of a regular antenna. Any of the doublet or transmission line types may be used.

Without matching transformer — Connect two transposed lead-in wires to two posts marked **"A"** and **"G"** respectively.

With line matching transformers — Connect leads from matching transformer to antenna posts marked **"A"** and **"G."** The use of a good ground on the ground post may be necessary in some cases.

PARTS LIST

Part No.	Description	List Price
P240	3 Gang Condenser	4.00
P244	Volume Control & "On-Off" Switch	1.10
P233	Wave Change Switch	.75
P234	Tone Control	1.00
P138	250 Ohm ½ Watt Resistor	.10
P237	1000 Ohm ½ Watt Resistor	.10
P238	15,000 Ohm ½ Watt Resistor	.10
P155	25,000 Ohm ½ Watt Resistor	.10
P139	250,000 Ohm ½ Watt Resistor	.10
P152	1 Megohm ½ Watt Resistor	.10
P143	.02 Mfd. 400 Volt Condenser	.20
P142	.1 Mfd. 200 Volt Condenser	.20
P276	.1 Mfd. 400 Volt Condenser	.20
P141	.25 Mfd. 200 Volt Condenser	.20
P234	.05 Mfd. 400 Volt Condenser	.20
P235	.01 Mfd. 600 Volt Condenser	.20
P478	.0012 Mfd. 300 Volt Condenser	.20
P147	.00025 Mica Condenser	.20
P460	.0001 Mica Condenser	.20
P435	6" Speaking Cone Only	.85
P439	Speaker Field Coil	1.00
G544	Spider & Voice Coil Unit Complete	.40
P434	6 Dynamic Speaker	1.00
P536	Knob	.15
G382	Convex Glass	.20
G383	Dial & Scale-Complete	2.00
P124	Pilot Light	.25
P550	Electrolytic Condenser	1.50
P170	350 Ohm Resistor	.20
P173	Oscillator Coil	.50
P175	A. C. Plug & Cord	.35
P182	Speaker Output Transformer	1.00
P181	1st I. F. Transformer	1.20
P180	2nd I. F. Transformer	1.20
P417	Padding Condenser	.40
G548	Short Wave Antenna Coil	.50
G541	Short Wave Oscillator Coil	.50
P672	Pre-Selector Coil	.85
P606	Power Transformer	2.25
G542	Police Band Antenna Coil	.45
G543	Police Oscillator Coil	.45

PRICES ARE SUBJECT TO CHANGE WITHOUT NOTICE

Five Tube A. C.

All Wave

Superheterodyne

©John F. Rider, Publisher

MODEL 6-Tube AC-DC Super
RADIO PRODUCTS CORP. Chassis B-2
Schematic, Socket, Trimmers

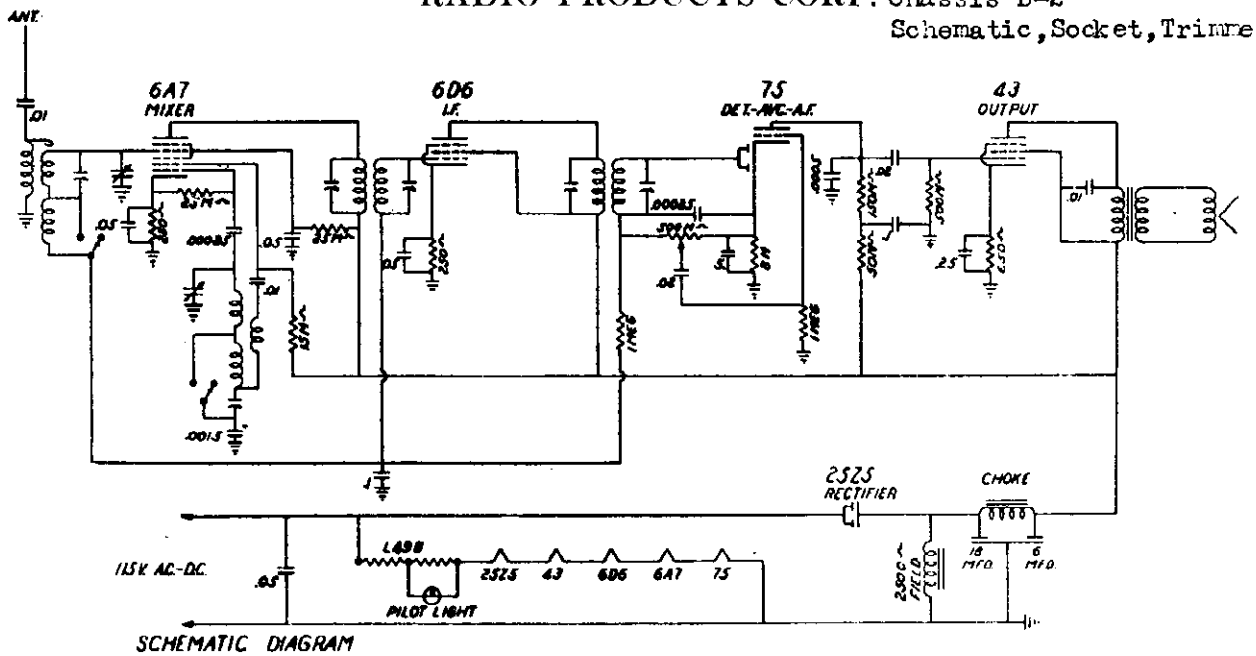

SCHEMATIC DIAGRAM
B2 CHASSIS
6 TUBE AC-DC. 2 BAND { BC- 540 TO 1720 KC. / SW. 2000 TO 7000 KC
I.F. = 456 KC.
SWITCH SHOWN IN B.C. POSITION

Six Tube A C - D C Superheterodyne
B2 Chassis

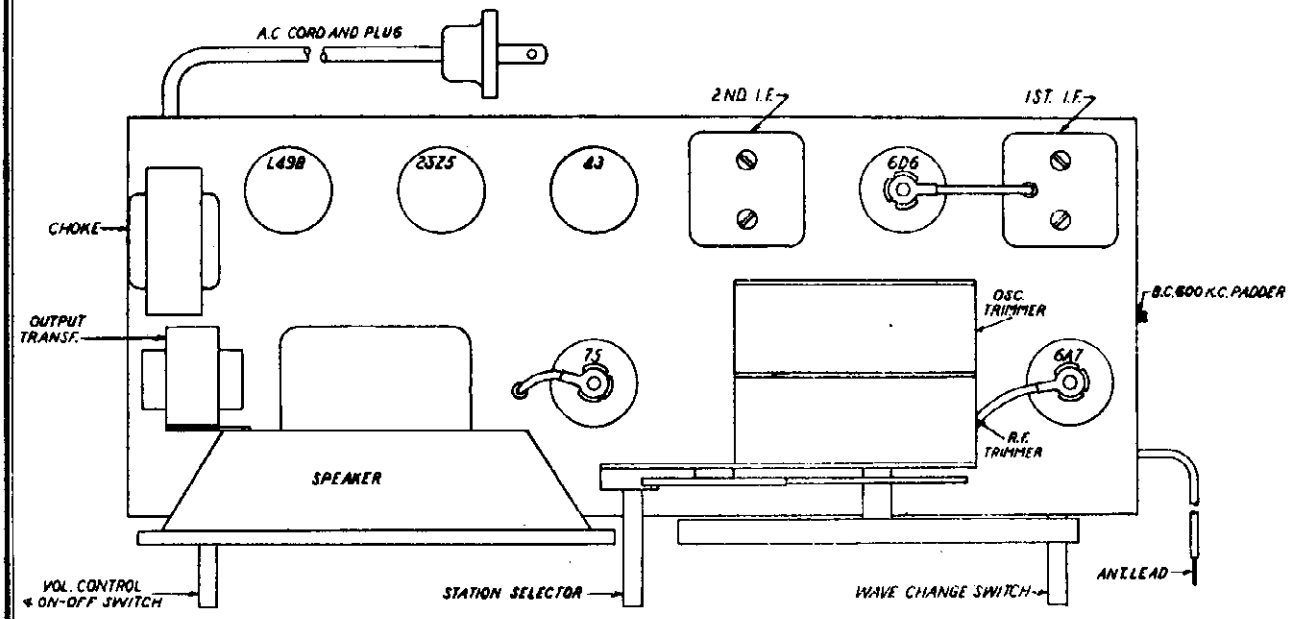

TUNING IN STATIONS

RIGHT HAND KNOB **(Manual Volume Control and "On-Off" Switch)**—Turn the right hand knob to the extreme right. The switch will click and the dial will become illuminated, with volume wide open. Wait about a minute for the tubes to become heated.

RIGHT HAND KNOB **(Two Position Wave Band Selecting Switch)**—Turned to the right, it is set for Standard Broadcast Band; turned to the extreme left, it is set for Foreign and American Short Wave Reception, Police, Aviation, Amateurs, and Ships at Sea.

CENTER KNOB **(Station Selector)** — Rotate the indicator needle slowly over a narrow range of the dial at a point where the desired station is located, until the station is received with maximum volume; then readjust the volume control to the proper level. **Never** use the station selector to adjust volume as this practice results in distorted tone quality and deficient bass response. The Volume Control **only** is to be used for this purpose. The indicator needle should be adjusted to the center of the area covered by the station being received.

©John F. Rider, Publisher

MODEL 6-Tube AC-DC Super
Chassis B-2
Alignment, Parts List

RADIO PRODUCTS CORP.

ALIGNMENT DATA AND SERVICING

GENERAL DATA The alignment of this receiver requires the use of a test oscillator that will cover the frequencies of 456, 600, 1400, and 6000 KC and an output meter to be connected across the primary or secondary of the output transformers. If possible, all alignments should be made with the volume control on maximum and the test oscillator output as low as possible, to prevent the AVC from operating and giving false readings.

CORRECT ALIGNMENT PROCEDURE The intermediate frequency (I.F.) stage should be aligned properly as the first step. After the I.F. transformers have been properly adjusted and peaked, the Broadcast Band should always be the next procedure; after which, the Short Wave Band may be aligned.

I.F. ALIGNMENT Adjust the test oscillator to 456 KC and connect the output to the grid of the first detector tubes (6A7) through a .05 or .1 mfd. condenser. The ground on the test oscillator can be connected to the chassis ground. Align all four I.F. trimmers to peak or maximum reading on the ouput meter.

BROADCAST BAND ALIGNMENT Adjust the oscillator to 1400 KC and connect the output to the antenna lead (Blue) through a .0001 mfd. mica condenser to give the equivalent of an antenna about 60 feet. Set the receiver pointer to 1400 KC and adjust the rear gang condenser trimmer (oscillator circuit) to peak. After this has been carefully done, the next step is to adjust the front trimmer of the gang condenser to peak.

Next, re-set the dial pointer on the receiver and the test oscillator to 600 KC. Slowly increase or decrease the oscillator padding condenser and at the same time continuously tune back and forth across the signal with the receiver until the maximum reading is obtained on the output meter. This adjustment seems a little complicated but is the easiest way to adjust the oscillator to the pre-selector or R.F. section. The padding condenser is located on the right hand end of the chassis near the 6A7 tube.

Return to 1400 KC and again go over the adjustments of this frequency to be certain that they were not put slightly out of alignment when adjustment was made at 600 KC.

This completes the correct sequence of operations in properly aligning the receiver for the Broadcast Band, and **must always be done before** attempting to align the Short Wave Band.

SHORT WAVE BAND There is only one adjustment to be made in the alignment of the Short Wave Band. Due to the circuit design and correct matching of the coils, no oscillator adjustment is necessary.
Set the dial pointer to 600 KC (also the test oscillator) and adjust the antenna and antenna trimmer to resonance. The short wave band coils are under the chassis and are located at the right front corner along side of wave band switch.

IMPORTANT: This is the only adjustment necessary for the Short Wave Band. Do not attempt any adjustment of the gang condenser trimmers in aligning the Short Wave Band, otherwise the Broadcast Band will be thrown out of alignment.

Return to 1400 KC and again go over the adjustments of this frequency to be certain that they were not put slightly out of alignment when adjustment was made at 6000 KC.

This completes the correct sequence of operations in properly aligning the receiver for the Broadcast Band, and MUST ALWAYS BE DONE BEFORE attempting to align the Short Wave Band.

Part No.	Description	List Price
P188	1st I. F. Transformer	1.25
P190	2nd I. F. Transformer	1.25
P948	Antenna Coil	1.00
P949	Oscillator Coil	.75
P341	Choke Coil	1.00
P913	Wave Change Switch	.50
P911	2 Gang Variable Cond	3.75
P912	Volume Control with Sw	1.00
P617	Padding Condenser	.35
P544	Small Trimmer Condenser	.15
P194	Tube Shield	.10
P195	Tube Shield Cap	.05
P506	6A7 Tube Socket	.15
P521	75 Tube Socket	.15
P560	43 Tube Socket	.15
P550	25Z5 Tube Socket	.15

Part No.	Description	List Price
P947	1498 Tube Socket	.15
P928	Speaker With Output	4.25
P929	AC Cord & Plug	.40
P930	Knob	.10
P921	Pointer	.10
P922	Dial Scale	.50
P923	Dial Glass	.25
P124	Pilot Light	.20
P136	250 Ohm ¼ Watt Resistor	.15
P953	650 Ohm ½ Watt Resistor	.20
P168	8,000 Ohm ¼ Watt Resistor	.15
P258	15,000 Ohm ¼ Watt Resistor	.15
P419	20,000 Ohm ¼ Watt Resistor	.15
P166	25,000 Ohm ¼ Watt Condenser	.15
P417	50,000 Ohm ¼ Watt Resistor	.15

Part No.	Description	List Price
P418	150,000 Ohm ¼ Watt Resistor	.15
P137	500,000 Ohm ¼ Watt Resistor	.15
P162	1 Megohm ¼ Watt Resistor	.15
P142	.10-200 Volt Condenser	.20
P143	.02-400 Volt Condenser	.20
P147	.00025 Mica Condenser	.20
P148	.05-200 Volt Condenser	.15
P278	.10-400 Volt Condenser	.25
P335	.01-600 Volt Condenser	.20
P336	.0005 Mica Condenser	.20
P827	.0015 Mica Condenser	.25
P304	5.0-30 Volt Electrolytic Condenser	.30
P337	18-8 Mid.-200 Volt Electrolytic Condenser	2.00
P141	.25-200 Volt Condenser	.20

PRICES ARE SUBJECT TO CHANGE WITHOUT NOTICE

©John F. Rider, Publisher

MODEL 6-Tube AC Super
Chassis L-2
Schematic

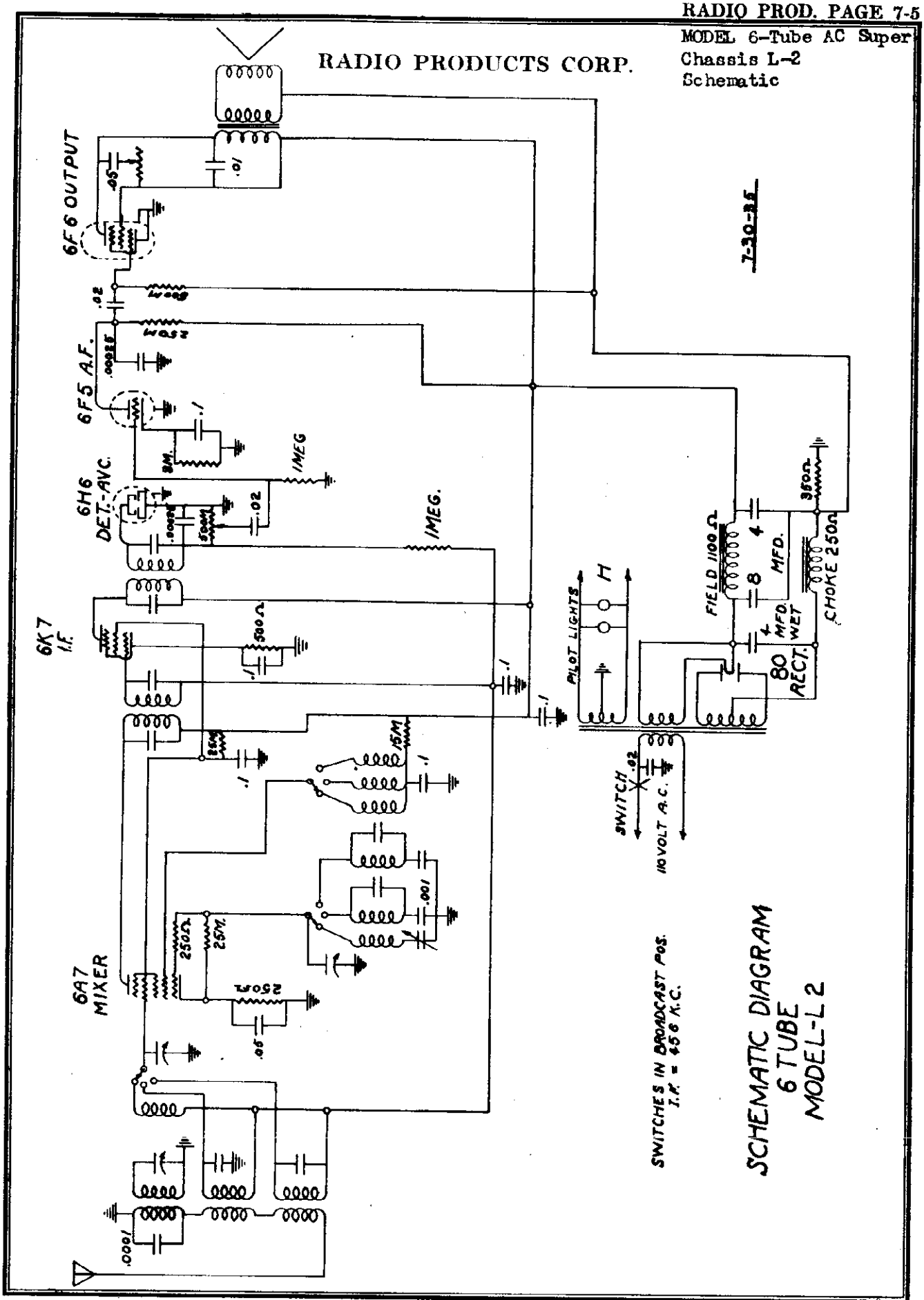

©John F. Rider, Publisher

MODEL 7-Tube AC Super
Chassis L-4
Schematic

RADIO PRODUCTS CORP.

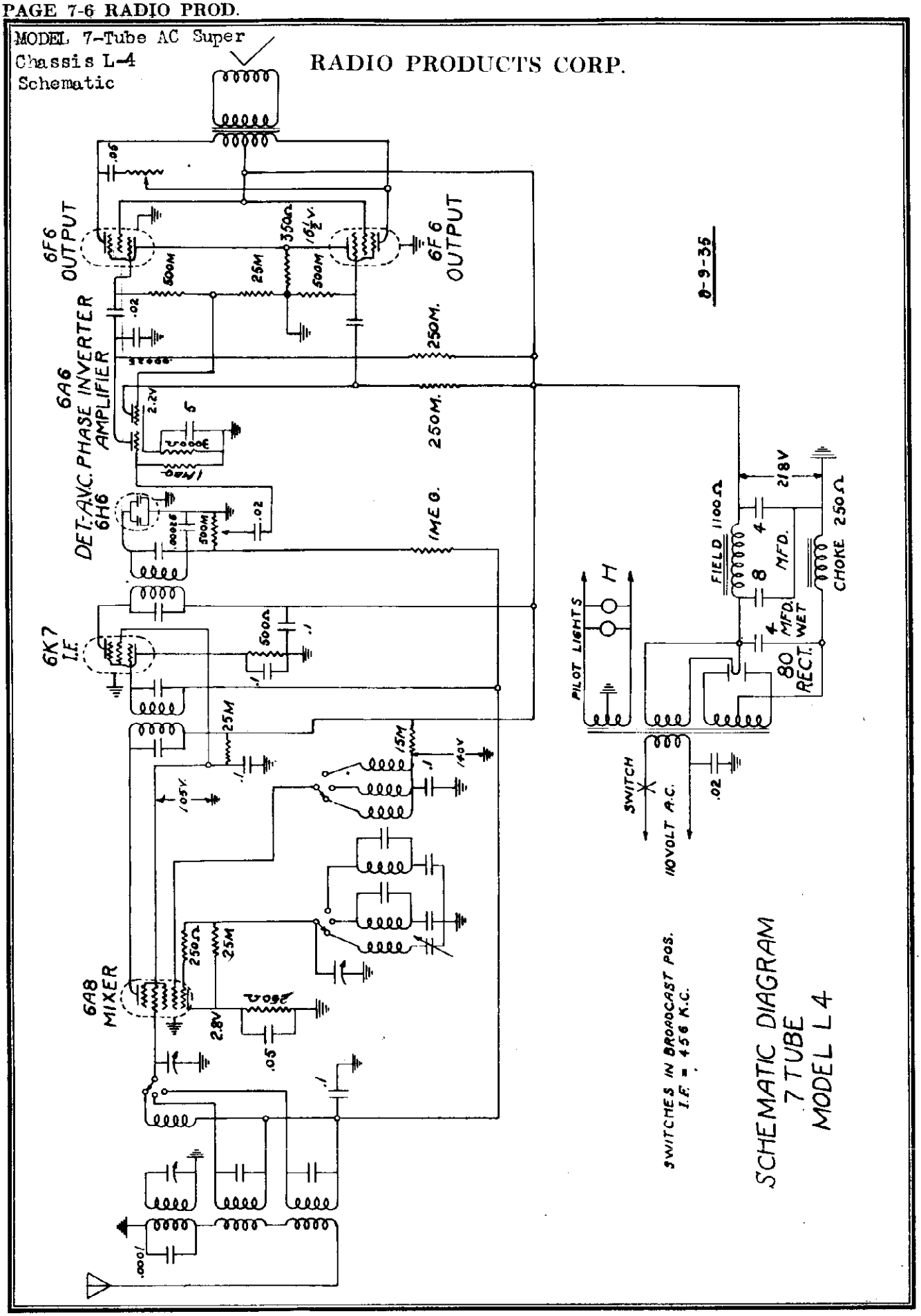

©John F. Rider, Publisher

Schematic, Voltage
Socket, Trimmers

RADIO PRODUCTS CORP.

MODEL 6-Tube AC-AW Super
Chassis Z-3

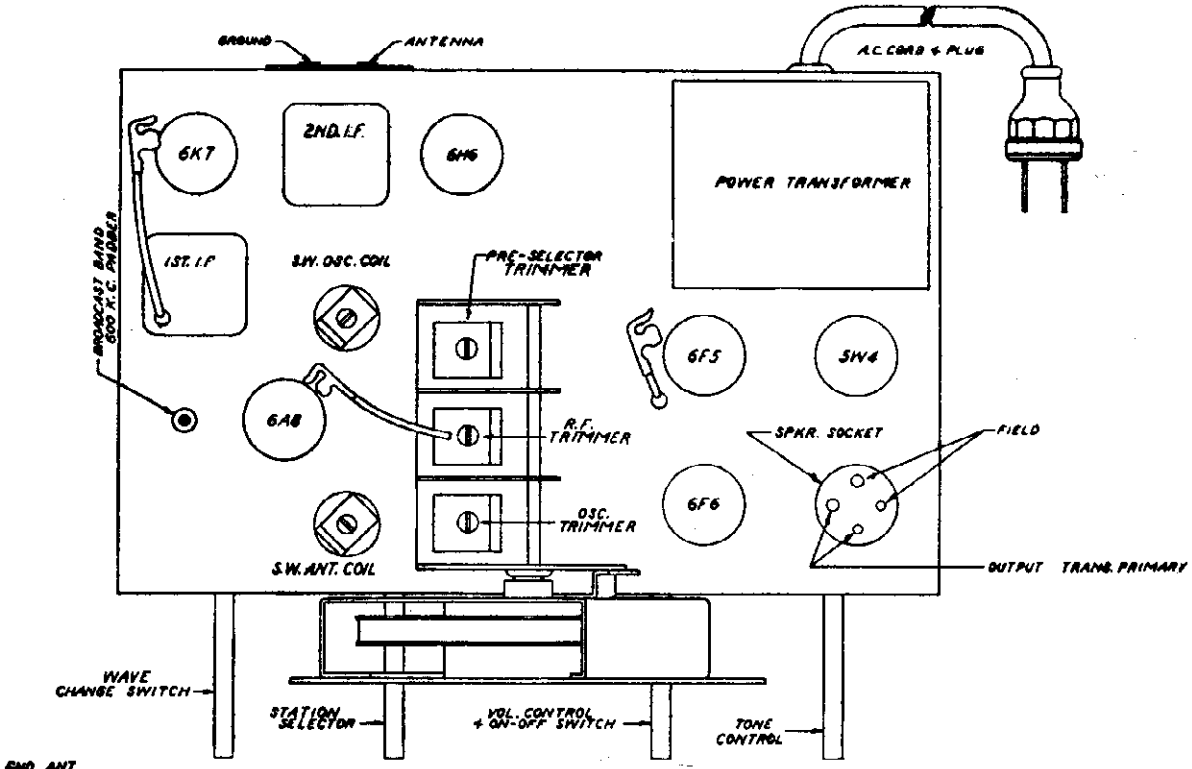

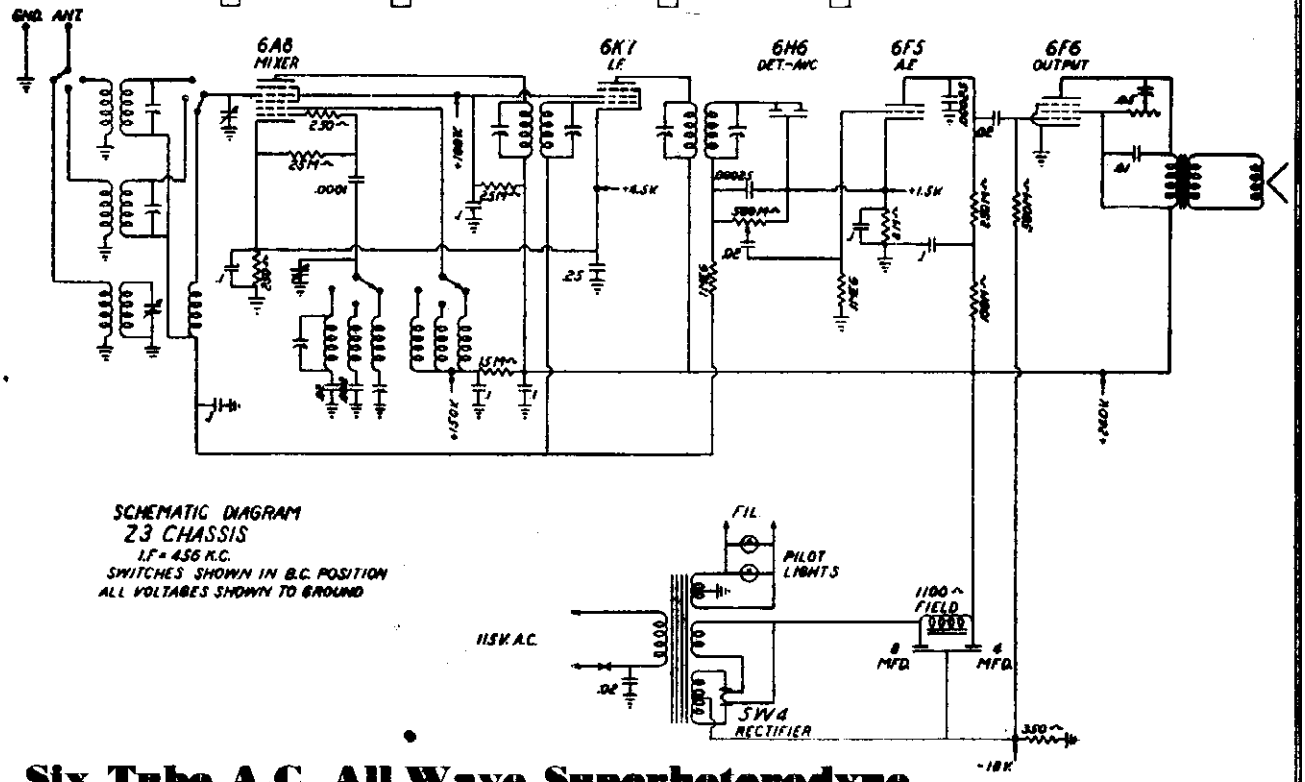

SCHEMATIC DIAGRAM
Z3 CHASSIS
I.F. = 456 K.C.
SWITCHES SHOWN IN B.C. POSITION
ALL VOLTAGES SHOWN TO GROUND

Six Tube A.C. All Wave Superheterodyne

Z3 Chassis

This receiver is designed to operate from a power supply main of 110-120 volts, 60 cycle alternating current (AC). **Never plug into a DC outlet.**

©John F. Rider, Publisher

MODEL 6-Tube AC-AW Super
Chassis Z-3
Alignment, Parts List

RADIO PRODUCTS CORP.

ALIGNMENT DATA AND SERVICING

GENERAL DATA The alignment of this receiver requires the use of a test oscillator that will cover the frequencies of 456, 690, 1400, 1800, 4000, 6000, and 14,000 KC and an output meter to be connected across the primary or secondary of the output transformers. If possible, all alignments should be made with the volume control on maximum and the test oscillator ouput as low as possible, to prevent the AVC from operating and giving false readings.

CORRECT ALIGNMENT PROCEDURE The intermediate frequency (I.F.) stage should be aligned properly as the first step. After the I.F. transformers have been properly adjusted and peaked, the Broadcast Band should always be the next procedure; after which, either or both of the Short Wave Bands may be aligned.

I.F. ALIGNMENT Adjust the test oscillator to 456 KC and connect the output to the grid of the first detector tubes (6A7) through a .05 or .1 mfd. condenser. The ground on the test oscillator can be connected to the chassis ground. Align all four I.F. trimmers to peak or maximum reading on the output meter.

BROADCAST BAND ALIGNMENT Adjust the oscillator to 1400 KC and connect the output to the antenna post marked "A" through a .0001 mfd. mica condenser to give the equivalent of an antenna about 60 feet. Set the receiver pointer to 1400 KC and adjust the rear gang condenser trimmer (oscillator circuit) to peak. After this has been carefully done, the next step is to adjust the center and front trimmers of the gang condenser to peak. The front gang section tunes the R.F. or grid coil of the 6A8 tube and the center condenser section tunes the pre-selector stage circuit.

Next, re-set the dial pointer on the receiver and the test oscillator to 600 KC. Slowly increase or decrease the oscillator padding condenser and at the same time continuously tune back and forth across the signal with the receiver until the maximum reading is obtained on the output meter. This adjustment seems a little complicated but is the easiest way to adjust the oscillator to the pre-selector or R.F. section. The padding condenser is located on the right hand end of the chassis near the 6K7 tube.

Return to 1400 KC and again go over the adjustments of this frequency to be certain that they were not put slightly out of alignment when adjustment was made at 600 KC.

This completes the correct sequence of operations in properly aligning the receiver for the Broadcast Band, and **must always be done before** attempting to align the Short Wave Bands.

FOREIGN BAND The Foreign Band of 19 to 49 meters can be adjusted by the two trimmers on the short wave coil located on the top of the chassis. Set the test oscillator to 14,000 KC. The oscillator coil is located near the 1st I.F. Transformer and the antenna or R.F. coil is located directly in front of the Short Wave oscillator coil and about midway between the 1st I.F. Transformer and the 6A7 tube. These two trimmers should be adjusted for peak at 14,000 KC and as the inherent design of the circuit has been expressly designed for simplicity in servicing, no other adjustments are necessary for aligning this band. **Note:** Always start this procedure by having the oscillator coil trimmer loose (out all the way), and the antenna coil trimmer fairly tight (in all the way); otherwise it is possible to make a false alignment on the image frequency.

Important: Do not attempt any adjustment of the gang condenser trimmers in aligning the Foreign Band as this will throw the Broadcast Band out of alignment.

POLICE BAND There is only one adjustment to be made in the alignment of the Police Band. Due to the circuit design and correct matching of the coils, no oscillator adjustment is necessary.

Set the dial pointer to 4000 KC (also the test oscillator) and adjust the antenna coil trimmer to resonance. In preparing the test oscillator for alignment of this band, connect a 400 ohm carbon resistor in series with the .0001 mfd. condenser on the output lead of the test oscillator. This resistor is used with the test oscillator only on the Short Wave Bands and should not be used for Broadcast Band alignment. The two police band coils are under the chassis and the antenna coil trimmer is mounted on the end of the antenna coil.

Important: This is the only adjustment necessary for the Police Band. Do not attempt any adjustment of the gang condenser trimmers in aligning the Police Band, otherwise the Broadcast Band will be thrown out of alignment.

This receiver is designed to operate over three tuning ranges. The broadcast range which extends from 545 to 1715 Kilocycles (KC) (175 to 550 meters), Police and Aviation Band which extends from 1715 to 5350 Kilocycles (KC) (56 to 175 Meters) and the International Short Wave Band which extends from 5760 to 16200 Kilocycles (KC) (18.5 to 52 meters). This short wave range is the one which includes the four internationally assigned bands—the 19, 25, 31 and 49 meter bands. PRICES ARE SUBJECT TO CHANGE WITHOUT NOTICE

PARTS LIST

Part No.	DESCRIPTION	LIST PRICE
P858	Electrolytic Condenser	1.50
P834	Volume Control & "On-Off" Switch	1.10
P804	Wave Change Switch	.75
P805	Tone Control	1.00
P173	Oscillator Coil	.50
P176	A. C. Plug & Cord	.35
P880	Power Transformer	4.00
P887	3 Gang Condenser	4.00
P180	1st I. F. Transformer	1.20
P190	2nd I. F. Transformer	1.20
P678	Pre-Selector Coil	.85
P617	Padding Condenser	.40
G560	Short Wave Antenna Coil	.50
G561	Short Wave Oscillator Coil	.50
G562	Police Band Antenna Coil	.45
G563	Police Band Oscillator Coil	.45
P170	350 Ohm Resistor	.20
P136	250 Ohm ¼ Watt Resistor	.10
P168	8,000 Ohm ¼ Watt Resistor	.10
P258	15,000 Ohm ¼ Watt Resistor	.10
P196	25,000 Ohm ¼ Watt Resistor	.10
P165	25,000 Ohm 1 Watt Resistor	.20
P280	100,000 Ohm ¼ Watt Resistor	.10
P139	250,000 Ohm ¼ Watt Resistor	.10
P137	500,000 Ohm ¼ Watt Resistor	.10
P162	1 Megohm ¼ Watt Resistor	.10
P143	.02 Mfd. 400 Volt Condenser	.20
P142	.1 Mfd. 200 Volt Condenser	.20
P276	.1 Mfd. 400 Volt Condenser	.20
P141	.25 Mfd. 200 Volt Condenser	.20
P147	.00025 Mica Condenser	.20
P334	.05 Mfd. 400 Volt Condenser	.20
P335	.01 Mfd. 600 Volt Condenser	.20
P478	.0012 Mfd. 200 Volt Condenser	.20
P182	Speaker Output Transformer	1.00
G573	8 Speaker Cone Only	.45
G564A	8" Spider & Voice Coil Unit Complete	.50
G725	8 Dynamic Speaker with R. C.	6.00

©1[illegible] T. Rider, Publisher

MODEL 6-Tube Batt. Super.

RADIO PRODUCTS CORP. Chassis Z-5

Schematic, Socket, Trimmers

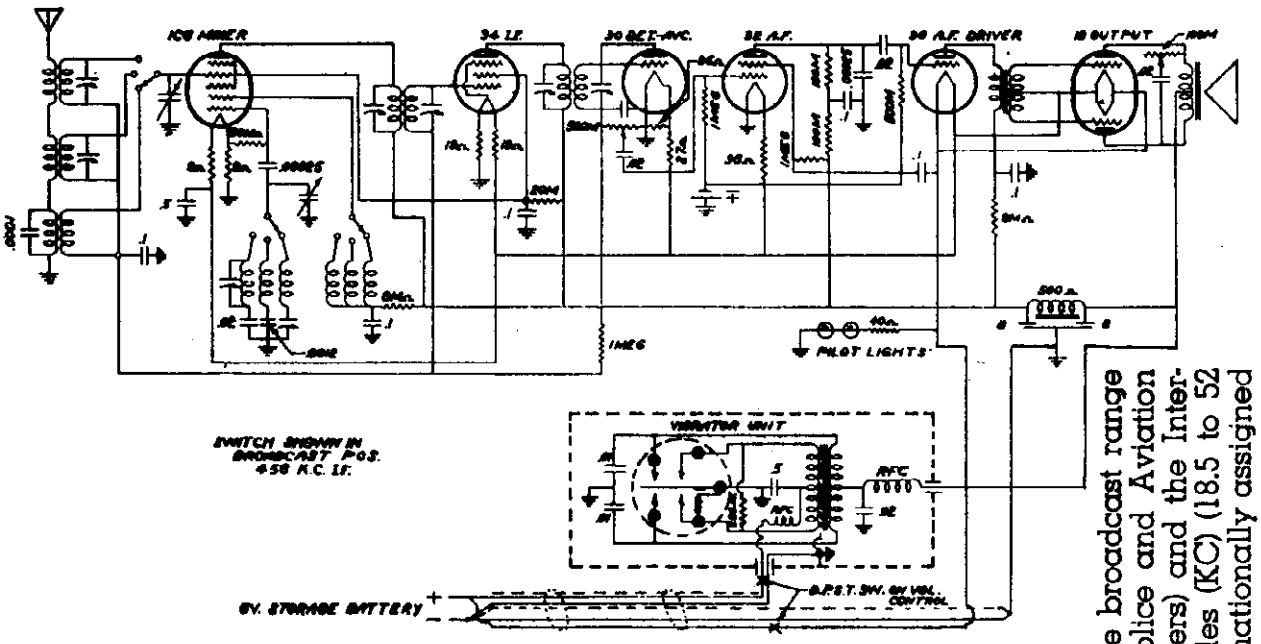

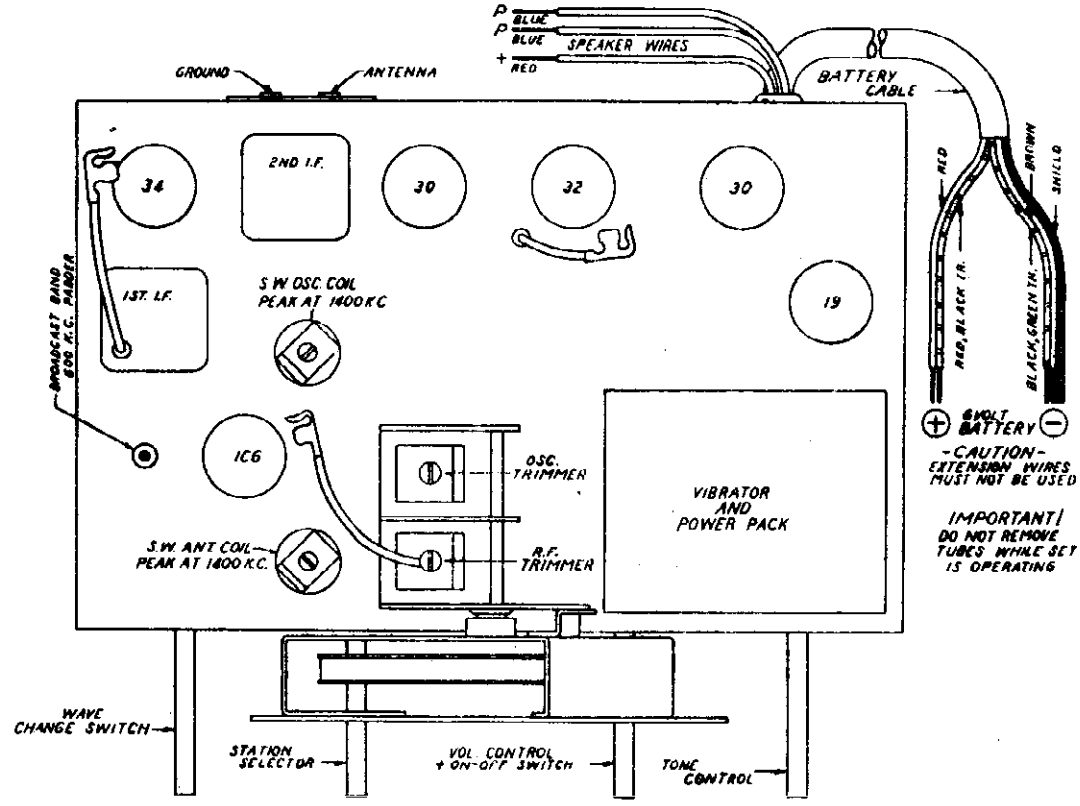

Six Tube 6 Volt Battery Superheterodyne

Z5 Chassis

This receiver is designed to operate over three tuning ranges. The broadcast range which extends from 545 to 1715 Kilocycles (KC) (175 to 550 meters), Police and Aviation Band which extends from 1715 to 5350 Kilocycles (KC) (56 to 175 Meters) and the International Short Wave Band which extends from 5760 to 16200 Kilocycles (KC) (18.5 to 52 meters). This short wave range is the one which includes the four internationally assigned bands—the 19, 25, 31 and 49 meter bands.

©John F. Rider, Publisher

MODEL 6-Tube Batt. Super.
Chassis Z-5
Alignment, Parts List

RADIO PRODUCTS CORP.

DOUBLET OR TRANSPOSED LEAD-IN TYPE **Without matching transformer** — Connect two transposed lead-in wires to two posts marked **"A"** and **"G"** respectively.

TRANSMISSION LINE TYPE **With line matching transformer** — Connect leads from matching transformer to antenna posts marked **"A"** and **"G."** The use of a good ground to the ground post may be necessary in some cases.

ALIGNMENT DATA AND SERVICING

GENERAL DATA The alignment of this receiver requires the use of a test oscillator which will cover the frequencies of 456, 600, 1400, 1800, 4000, 6000 and 14,000 KC and an output meter which is to be connected across the primary or secondary of the output transformer. If possible, all alignments should be made with the volume control on maximum and the test oscillator output as low as possible to prevent the AVC from operating and giving false readings.

CORRECT ALIGNMENT PROCEDURE The intermediate frequency (I.F.) stage should be aligned properly as the first step. After the I.F. transformers have been properly adjusted and peaked, the Broadcast Band should always be the next procedure; after which, either or both of the Short Wave Bands may be aligned.

I.F. ALIGNMENT Adjust the test oscillator to 456 KC and connect the output to the grid of the first detector tube (1C6) through a .05 or .1 mfd. condenser. The ground on the test oscillator can be connected to the chassis ground. Align all four I.F. trimmers to peak or maximum reading on the output meter.

BROADCAST BAND ALIGNMENT Adjust the oscillator to 1400 KC and connect the output to the antenna post marked "A" through a .0001 mfd. mica condenser to give the equivalent of an antenna about 60 feet. Set the receiver pointer to 1400 KC and adjust the rear gang condenser trimmer (oscillator circuit) to peak. After this has been carefully done, the next step is to adjust the front trimmer of the gang condenser to peak. The front condenser section tunes the RF or grid circuit of the 1C6 tube. Next, reset the dial pointer on the receiver and the test oscillator to 600 KC. Slowly increase or decrease the oscillator padding condenser and at the same time continuously tune back and forth across the signal with the receiver until the maximum reading is obtained on the output meter. This adjustment may seem a little complicated but is the easiest way to adjust the oscillator to the R.F. section. The padding condenser is located on the left hand side of the chassis, directly to the left of the 1C6 tube and in front of the first I.F. transformer. Return to 1400 KC and again go over the adjustments of this frequency to be certain that they were not put slightly out of alignment when adjustment was made at 600 KC.

This completes the correct sequence of operations in properly aligning the receiver for the Broadcast Band, and must always be done before attempting to align the Short Wave Bands.

FOREIGN BAND ALIGNMENT The Foreign Band of 19 to 49 meters can be adjusted by the two trimmers on the short wave coils located on the top of the chassis. Set the test oscillator to 14,000 KC. In preparing the test oscillator for alignment of this band, connect a 400 ohm carbon resistor in series with the .0001 mfd. condenser on the output lead of the test oscillator. The oscillator coil is located near the 1st I.F. Transformer and the antenna or R.F. coil is located directly in front of the Short Wave oscillator coil and alongside the front section of the gang condenser. These two trimmers should be adjusted for peak at 14,000 KC and as the inherent design of the circuit has been expressly developed for simplicity in servicing, no other adjustments are necessary for aligning this band. **Note:** Always start this procedure by having the oscillator coil trimmer loose (out all the way) and the antenna coil trimmer fairly tight (in all the way); otherwise it is possible to make a false alignment on the image frequency. In order to prevent alignment on the image frequency, it is suggested that the following check be made: Readjust the pointer to 13,100 KC where the image frequency should be found. If properly aligned, the image frequency will be found to be weaker. If, however, the signal at 13,100 KC is found to be stronger than the signal at 14,000 KC it signifies that alignment was incorrectly made on the image frequency.

IMPORTANT: Do not attempt any adjustment of the gang condenser trimmers in aligning the Foreign Band as this will throw the Broadcast Band out of alignment.

POLICE BAND ALIGNMENT There is only one adjustment to be made in the alignment of the Police Band. Due to the circuit design and correct matching of the coils, no oscillator adjustment is necessary. Set the dial pointer to 4000 KC (also the test oscillator) and adjust the antenna coil trimmer to resonance. In preparing the test oscillator for alignment of this band, connect a 400 ohm carbon resistor in series with the .0001 mfd. condenser on the output lead of the test oscillator. This resistor is used with the test oscillator only on the Short Wave Bands and should not be used for Broadcast Band alignment. The two police band coils are under the chassis and the antenna coil trimmer is mounted on the end of the antenna coil. **Important:** This is the only adjustment necessary for the Police Band. Do not attempt any adjustment of the gang condenser trimmers in aligning the Police Band, otherwise the Broadcast Band will be thrown out of alignment.

SERVICE DATA FOR ALL BANDS

If it is suspected that the oscillator has stopped but is doubtful due to the presence of the usual amount of noise level, it is suggested that the oscillator plate voltage be checked. To ascertain whether the tube is oscillating, ground the oscillator grid of the 1C6 (short stator and rotor plates of oscillator section on gang condenser). If oscillating properly, grounding the grid will cause an appreciable drop in oscillator voltage.

BATTERY SELECTION This receiver is designed to operate entirely from a 6 volt storage battery. It requires no other batteries. It will operate from any storage battery having a capacity ranging from 90 to 175 ampere hours. It is suggested, for the sake of greatest economy, that the largest possible capacity battery be used. The following is a schedule giving the number of hours of service on a single charge from batteries of standard capacities. A fully charged battery will provide satisfactory power for the periods specified before requiring additional charge.

90 Ampere Hour Capacity provides 60 hours use.
100 Ampere Hour Capacity provides 66 hours use.
110 Ampere Hour Capacity provides 73 hours use.
120 Ampere Hour Capacity provides 80 hours use.
150 Ampere Hour Capacity provides 100 hours use.
170 Ampere Hour Capacity provides 113 hours use.

Note: The above tabulation is rated very conservatively and in most cases, with new or correctly rated batteries in good condition, many additional hours of service can be obtained from each charge. If for any reason, be due to the proper hours of service are not obtained, it will be due to the use of an old battery whose condition and rating are no longer up to standard. If a brand new battery fails to give the required hours of service, it is due to the battery being wrongly rated.

BATTERY CONNECTIONS At the rear of the receiver there will be found extending from the left end of the chassis, the battery connecting cable. Observation will show that 5 wires are brought out from the braided cable. The **red** and **red with black tracer** wires are joined together and should **both** be securely fastened to the positive (+) terminal of the 6 volt storage battery. The other 3 wires which are **brown, black with green tracer** and **Metallic shield lead** are also joined together and should be securely connected to the negative (—) post of the battery.

Note: It is extremely important that only the best possible means of obtaining a secure connection to the battery terminals be employed. If a battery with automobile terminal posts is used, the **large** post is the positive (+) post; the **smaller post** is the **negative** (—) terminal. It is suggested, when using a battery with auto type posts that large heavy lead covered battery clips be used in making connections. Make sure that **all wires** are firmly connected to clips (solder if possible). Also see that the low teeth of the clips are clean, and firmly bite into the post. It is very important that the battery posts and battery clip teeth be cleaned at frequent intervals to assure maintaining good connections. Corrosion may be readily removed by cleaning with a solution of 3 tablespoons of bicarbonate of soda (baking soda) and one cup of water. This solution neutralizes the acid coating that causes the corrosion and leaves a protective condition that retards further corrosion. It is important that this solution does not in any way enter the interior of the battery.

PRICES ARE SUBJECT TO CHANGE WITHOUT NOTICE

Part No.	DESCRIPTION	LIST PRICE
P172	Oscillator Coil	.50
P180	1st I. F. Transformer	1.20
P180	2nd I. F. Transformer	1.20
P184	Tube Shield	.10
P184	Tube Shield	.15
P280	Antenna & Ground Post	.15
P282	Antenna Coil	.75
P282	Battery Cord	.75
P288	Dual 8-Electrolytic Condenser	2.00
P402	Vibrator Unit	5.00
P402	Vibrator Socket	.15
P411	Filter Choke 350-ohm	.75
P423	40-Ohm Candohm Resistor	.20
P448	Pilot Light 2V. 06 M.A.	.35
P452	Tube Shield	.15
P454	R. F. Choke	.50
P457	A. Choke	.50
P522	Pilot Light Bracket	.15
P570	3-Gang Condenser	2.75
P544	Trimmer Condenser	.15
P617	Padding Condenser	.40
P617	Trimmer Condenser	1.00
P694	Knob	.25
P737	Escutcheon Plate	.50
P838	Cabinet Glass	1.20
P839	Glass Retainer Ring	.15
P841	Escutcheon Ring	.20
P861	Volume Control with Switch	1.10
P862	Tone Control	.75
P864	6/32 Wing Nuts	.10
P880	Bias Coil	.25
P880	Bias Cell Panel	.15
P710	Input Transformer	1.50
G700	Power Unit Complete with Vibrator	12.00
P854	Power Transformer	2.00
P777	Candohm 194-Ohm Resistor	.20
P778	Candohm Gang Resistor	.50
P823	Wave Switch	.85
G540	Short Wave Antenna Coil	.50
G581	Short Wave Oscillator Coil	.50
G582	Police Band Antenna Coil	.45
G583	Police Band Oscillator Coil	.45
P975	8" Per. Magnet Spkr.	7.00
P980	8" Perm. Mag. Spkr.	7.50
P981	Type 30 Socket	.15
P953	Type 24 Socket	.15
P954	Type 1C6 Socket	.15
P955	Type 32 Socket	.15
P987	Type 19 Socket	.15
P138	250 Ohm ¼ Watt Resistor	.10
P137	300,000 Ohm ¼ Watt Resistor	.10
P182	1-Megohm ¼ Watt Resistor	.10
P158	8,000 Ohm ¼ Watt Resistor	.10
P280	100,000 Ohm ¼ Watt Resistor	.10
P417	50,000 Ohm ¼ Watt Resistor	.10
P418	20,000 Ohm ¼ Watt Resistor	.10
P142	.1-MFD-200V Condenser	.15
P143	.02-MFD-400V Condenser	.20
P147	.0025-Mica-20% Condenser	.20
P235	.01-MFD-400V Condenser	.15
P235	.5-10V Condenser	.35
P476	.0015-MFD-200V Condenser	.20
P480	.0001 Mica Condenser	.15
P472	.001 Mica Condenser	.20

©John F. Rider, Publisher

RADOLEK CO.

This receiver is a five-tube superheterodyne type which operates on EITHER AC OR DC CURRENT at a frequency of 25 to 80 cycles and at 110 volts. It has two bands, covering the standard broadcast from 1500 to 540 kilocycles, and the police band from 4500 to 1650 kilocycles. Refer to tube layout on bottom of cabinet for position of tubes.

ANTENNA

A 20-foot coil of antenna wire is supplied connected to the receiver. This is usually sufficient for most locations if it is unrolled and laid on the floor or thrown out of window. However, in some buildings of steel construction it may be necessary to use an outside antenna to obtain satisfactory results. Connect it to end of the antenna supplied.

GROUND

No ground connection is necessary. There is no provision made for its use on this set.

OPERATION OF SET

The set is turned on with the left hand knob; when turned to the right, it switches on the set, illuminating the dial, and when turned further acts as the volume control. The right hand knob is the station selector with which the stations are tuned in. A knob at the rear of the set switches on the short wave band. Best reception on the short wave can only be expected with the attachment of the antenna lead to an outside aerial. This will help to bring in more distant stations and will eliminate background noise. The wall plug may have to be reversed in its socket if set does not play, as on DC current, it will play only in one position, but on AC current, will play in either position....Do not become alarmed at warmth of cord, as it is asbestos lined, and is the means of escape of the heat generated in the radio.

©John F. Rider, Publisher

MODEL 10927
Schematic
Notes

RADOLEK CO.

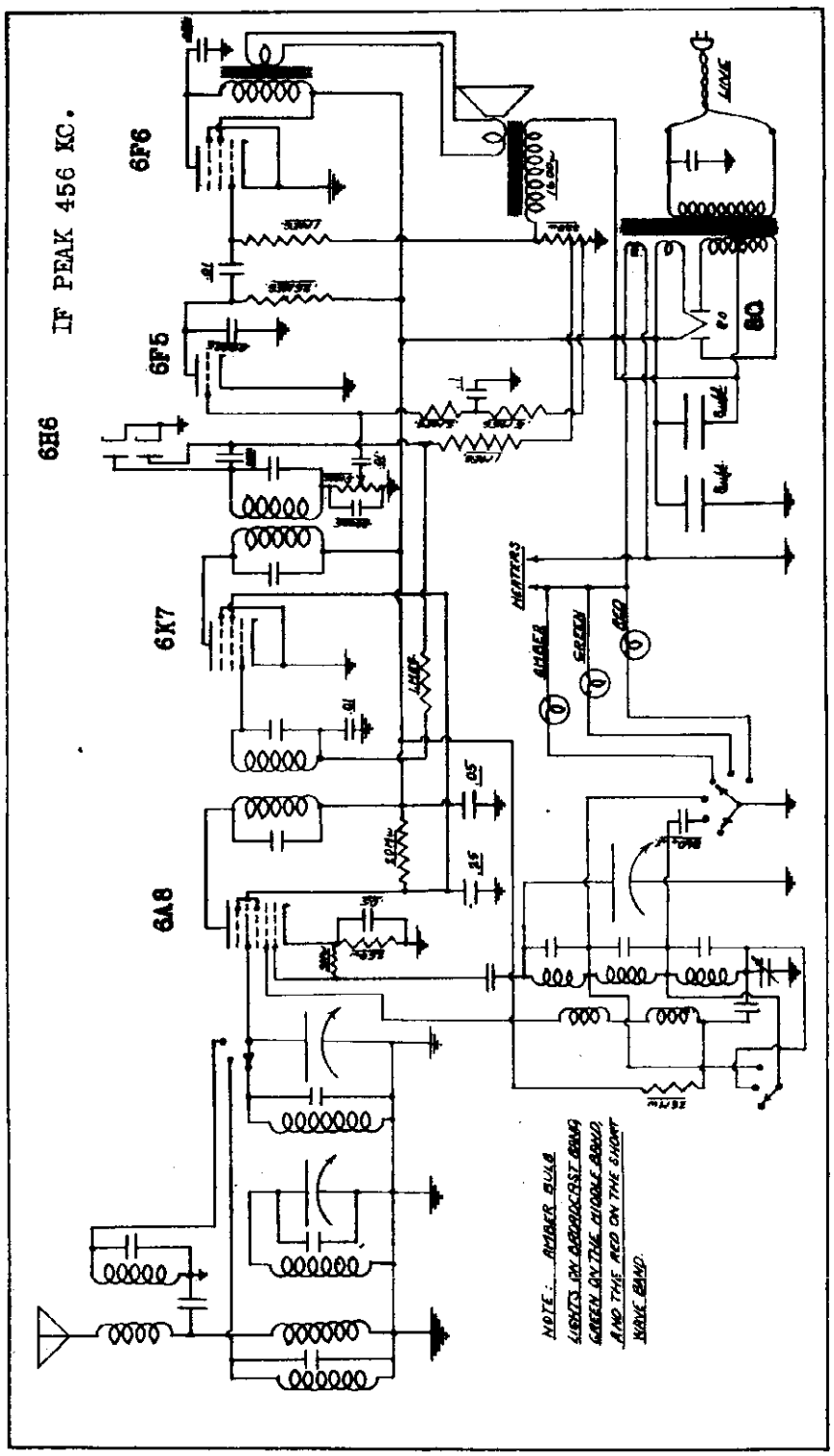

This radio is a six-tube Superheterodyne type which operates ON AC CURRENT ONLY at a frequency of 60 cycles and at 110 volts.
It covers three wave bands, as follows:

Standard Broadcast band - 540-1750 kc - AMBER light
Police and Amateur band - 1650-5000 kc - GREEN light
Short wave, American & Foreign - 18-6.7 mg.-RED light

Antenna and Ground

An outside antenna is desirable with this radio in order to obtain the maximum in performance. With an efficient outside antenna, foreign reception is guaranteed. The short red wire in the rear should be connected to the antenna. It is desirable to have this antenna clear of surrounding objects and as high as possible from the ground. The black wire is the grounding terminal. If the lighting circuit is not already grounded, reception will be improved by connecting this black wire to the cold water pipe or radiator; otherwise the ground wire can be left free.

Operation of Set

The right hand knob switches on the set, and thereafter acts as the volume control. The upper middle knob is the station selector with which the stations are tuned in. The lower middle knob is the variable tone control, allowing you to control the tone for base or sharp timbre. The left hand knob controls the three wave bands of the set. When turned to the extreme left, the broadcast band is on, showing an AMBER light; switched to the center, the police and amateur band is on, showing a GREEN light; the extreme right brings in the short wave, showing a RED light. Success with short wave requires more careful tuning than with the broadcast band and necessitates study of a chart to ascertain location of the principal short wave broadcasting stations. Air conditions are not always favorable to short wave reception, under which conditions nothing can be done, but with reasonable atmospheric clearance, good foreign reception may be had.

©John F. Rider, Publisher

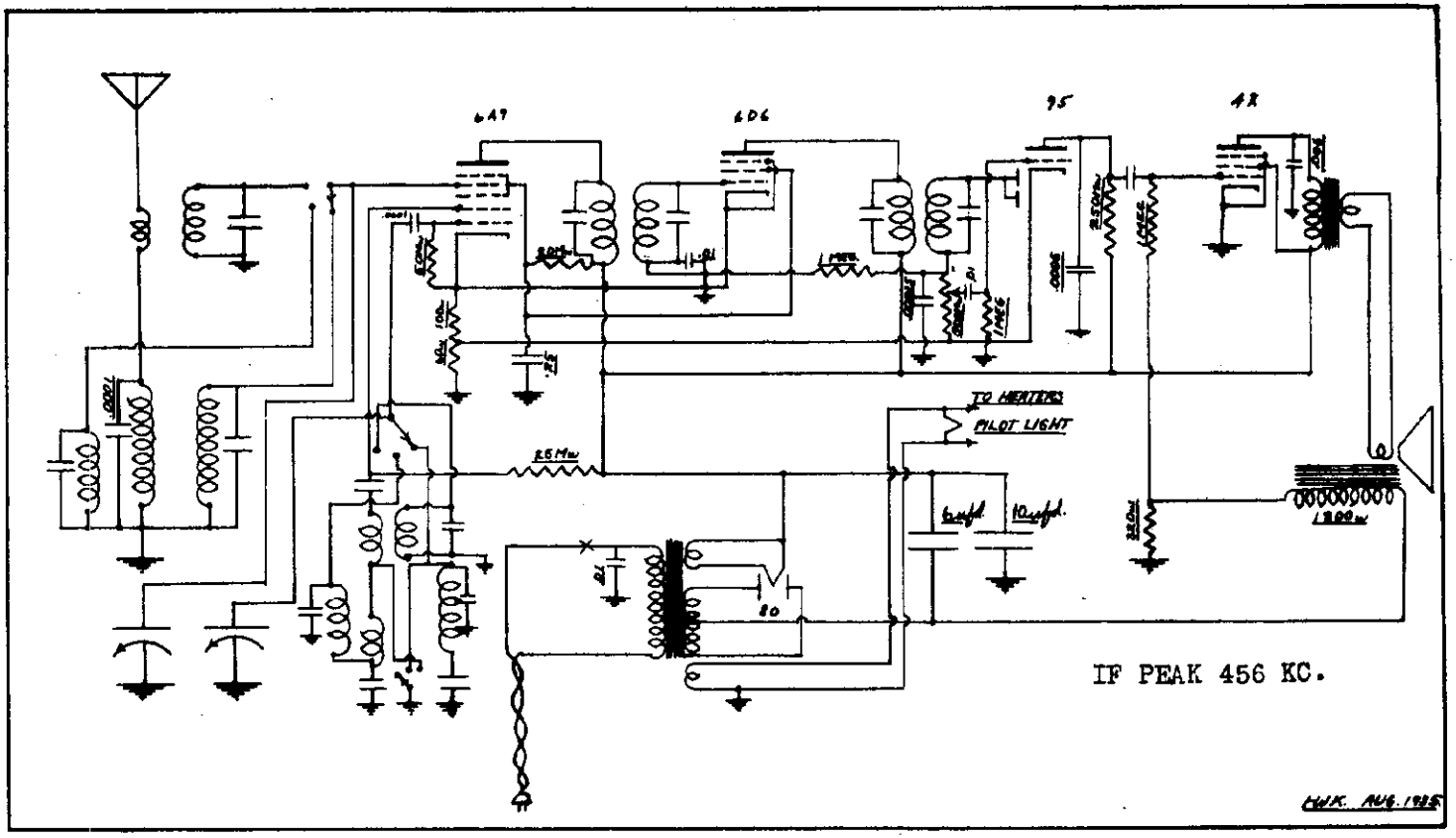

This radio is a five-tube Superheterodyne type which operates on AC CURRENT ONLY at a frequency of 60 cycles and at 110 volts. It covers three wave bands, as follows:

Standard broadcast band -- 540-1750 kc - No. 1
on left-hand knob
Police & Amateur band -- 1650-5000 kc - No. 2
on left-hand knob
Short wave, American & Foreign - 18-5.7 meg. No. 3
on left-hand knob

Antenna and Ground

An outside antenna is desirable with this radio in order to obtain the maximum in performance. With an efficient outside antenna, foreign reception is guaranteed. The short red wire in the rear should be connected to the antenna. It is desirable to have this antenna clear of surrounding objects and as high as possible from the ground. The black wire is the grounding terminal. If the lighting circuit is not already grounded, reception will be improved by connecting this black wire to the cold water pipe or radiator; otherwise the ground wire can be left free.

Operation of Set

The right hand knob switches on the set, and thereafter acts as the volume control. The center knob is the station selector with which the stations are tuned in. The left hand knob controls the three wave bands. The line on the knob properly aligned with the numbers 1, 2, or 3 shown on the face of the cabinet will bring in the respective bands shown above. Success with short wave requires more careful tuning than with the broadcast band, and necessitates study of a chart to ascertain location of the principal short wave broadcasting stations. Air conditions are not always favorable to short wave reception, but with reasonable atmospheric clearance, good foreign reception is guaranteed.

©John F. Rider, Publisher

MODEL 10931
Schematic
Notes

RADOLEK CO.

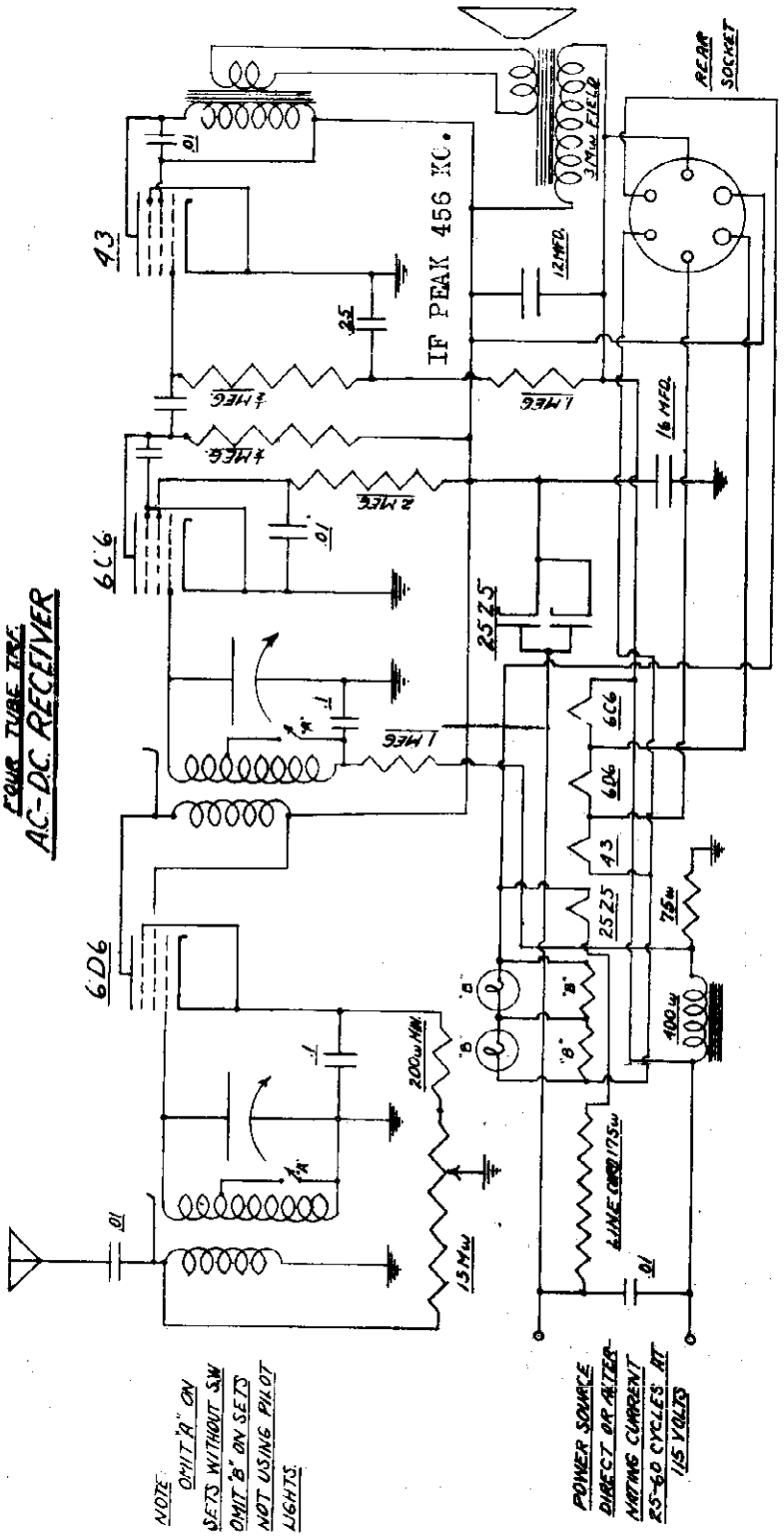

OPERATION OF SET

Turn the set on with left hand knob allowing a few seconds for the tubes to warm up, then tune in on station desired with right hand knob. The left hand knob, once turned on, thereafter acts as a volume control. This set covers the station broadcast bands from 550 to 1500 kilocycles, or 175 to 550 meter. 175 meter police may be tuned in at bottom of the dial. If this set has short wave, 125 meter police may also be obtained on it. The cord that plugs into the light socket is known as the resistance cord. This cord is asbestos lined and is used as a means of permitting the heat generated from the set and tubes to pass through it, causing this cord to become warm. Do not become alarmed therefore at the temperature of this cor

ANTENNA

A 20 foot coil of antenna wire is supplied connected to the receiver. This is usually sufficient for most locations if it is unrolled and laid on the floor or thrown out of window. However, in some buildings of steel construction it may be necessary to use an outside antenna to obtain satisfactory results. Connect it to end of the antenna supplied.

GROUND

No ground connection is necessary. There is no provision made for its use on this set.

©John F. Rider, Publisher

RADOLEK CO.

MODEL 10943
Schematic

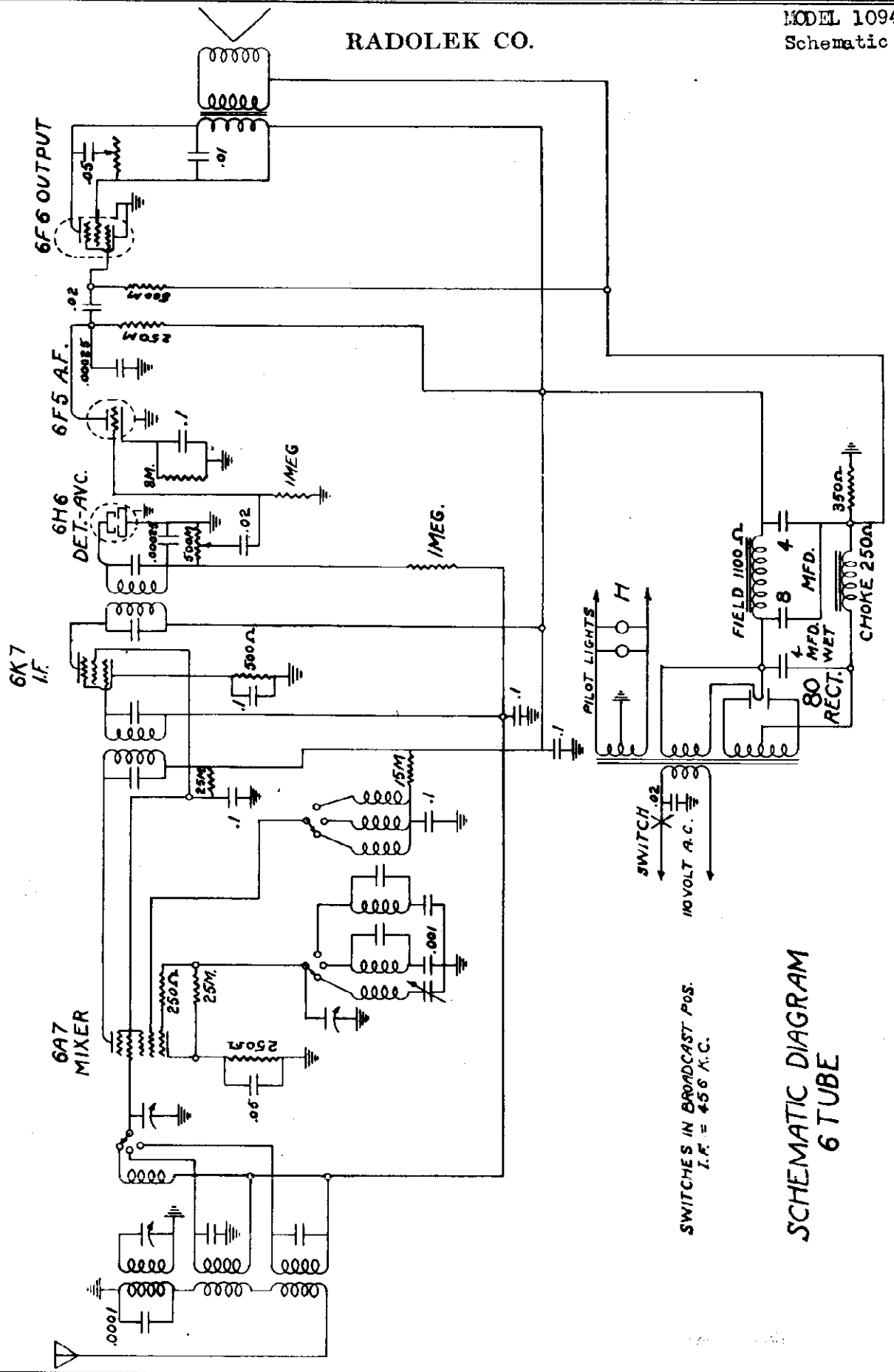

©John F. Rider, Publisher

MODEL 11908
Schematic
Socket

RADOLEK CO.

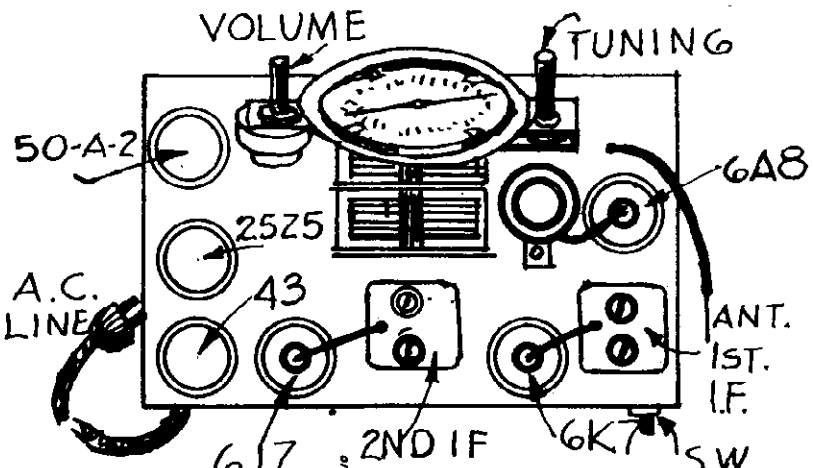

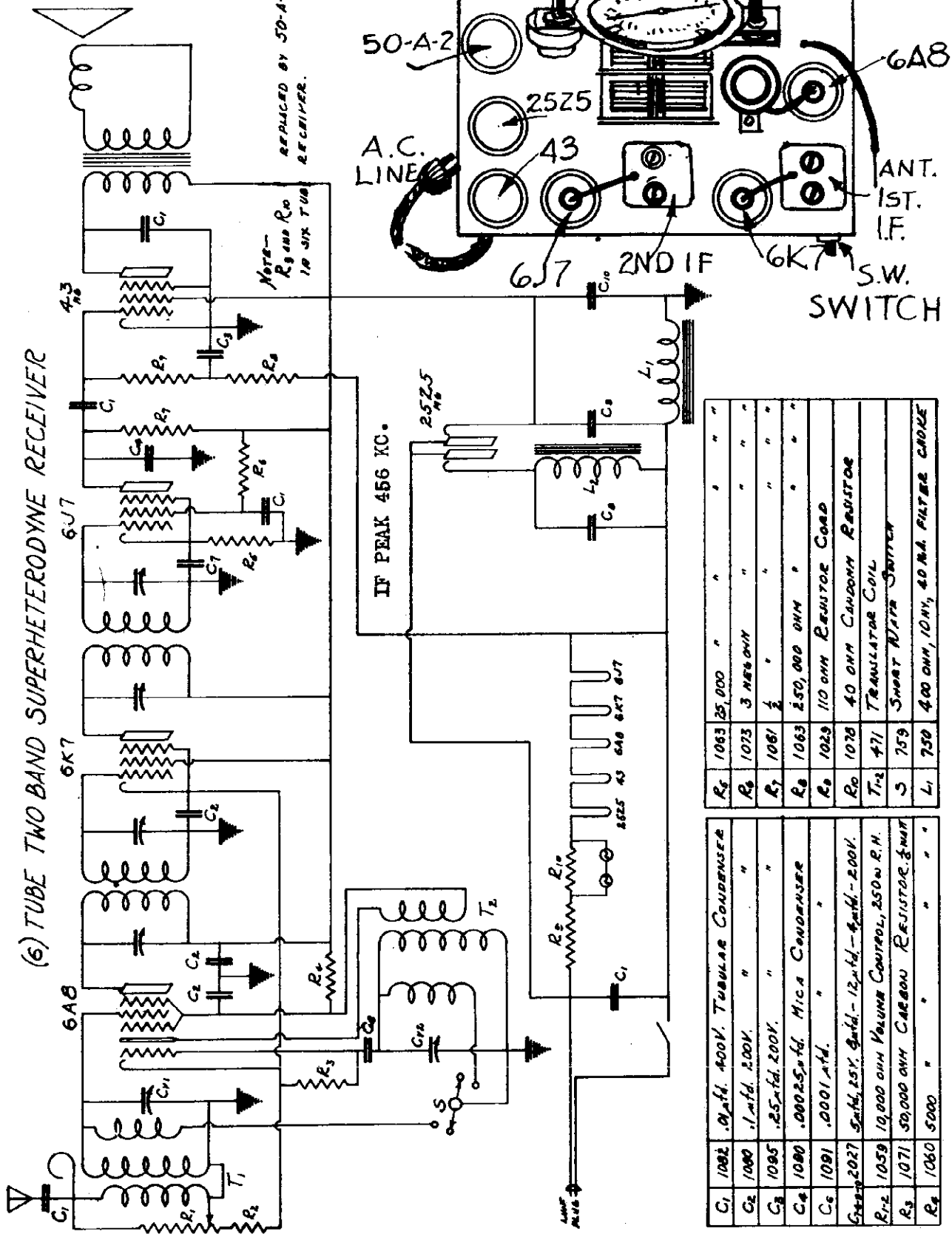

C_1	1082	.04 mfd. 400V. Tubular Condenser
C_2	1080	.1 mfd. 200V. " "
C_3	1095	.25 mfd. 200V. " "
C_4	1080	.00025 mfd. Mica Condenser
C_5	1091	.0001 mfd. " "
C_{6-7-8}	2027	8 mfd. 25V. 8 mfd. - 12 mfd. - 8 mfd. - 200V.
R_{1-2}	1059	10,000 ohm Volume Control, 250 m.a.
R_3	1071	50,000 ohm Carbon Resistor & Shunt
R_4	1060	5000 " " " "

R_5	1063	25,000 " " " " "
R_6	1073	3 Meg ohm " " " "
R_7	1061	½ " " " " "
R_8	1063	250,000 ohm " " " "
R_9	1029	110 ohm Resistor Cord
R_{10}	1078	40 ohm Cathohm Resistor
T_{1-2}	471	Translator Coil
S	759	Short Wave Switch
L_1	750	400 ohm, 10 ma, 40 ma. Filter Choke

©John F. Rider, Publisher

©John F. Rider, Publisher

FOUR TUBE TRF
AC-DC RECEIVER

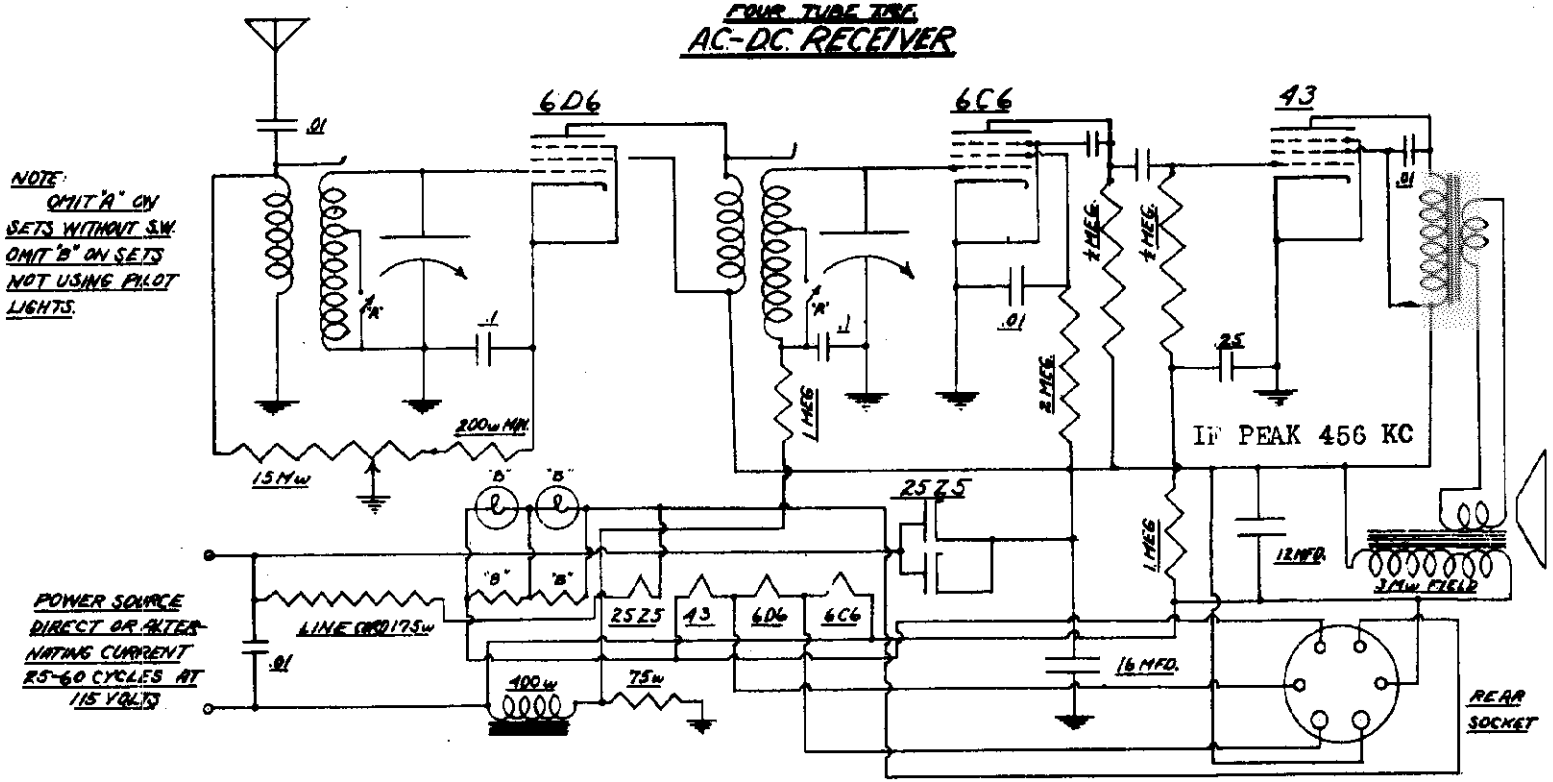

SUPPLY VOLTAGE

This receiver operates from any 110 volt light socket of any frequency AC or straight DC. When operating on a DC socket, the plug may have to be reversed in the socket to obtain the correct polarity, as it will work only in one position on DC current, but in either position on AC current.

ANTENNA

A 20 foot coil of antenna wire is supplied connected to the receiver. This is usually sufficient for most locations if it is unrolled and laid on the floor or thrown out of window. However, in some buildings of steel construction it may be necessary to use an outside antenna to obtain satisfactory results. Connect it to end of the antenna supplied.

GROUND

No ground connection is necessary. There is no provision made for its use on this set.

OPERATION OF SET

Turn the set on with left hand knob allowing a few seconds for the tubes to warm up, then tune in on station desired with right hand knob. The left hand knob, once turned on, thereafter acts as a volume control. This set covers the station broadcast bands from 550 to 1500 kilocycles, or 175 to 550 meter. 175 meter police may be tuned in at bottom of the dial. If this set has short wave, 125 meter police may also be obtained on it. The cord that plugs into the light socket is known as the resistance cord. This cord is asbestos lined and is used as a means of permitting the heat generated from the set and tubes to pass through it, causing this cord to become warm. Do not become alarmed therefore at the temperature of this co:

©John F. Rider, Publisher

CIRCUIT DIAGRAM

5 Tube A.C.
Superheterodyne
Broadcast and
Police Bands

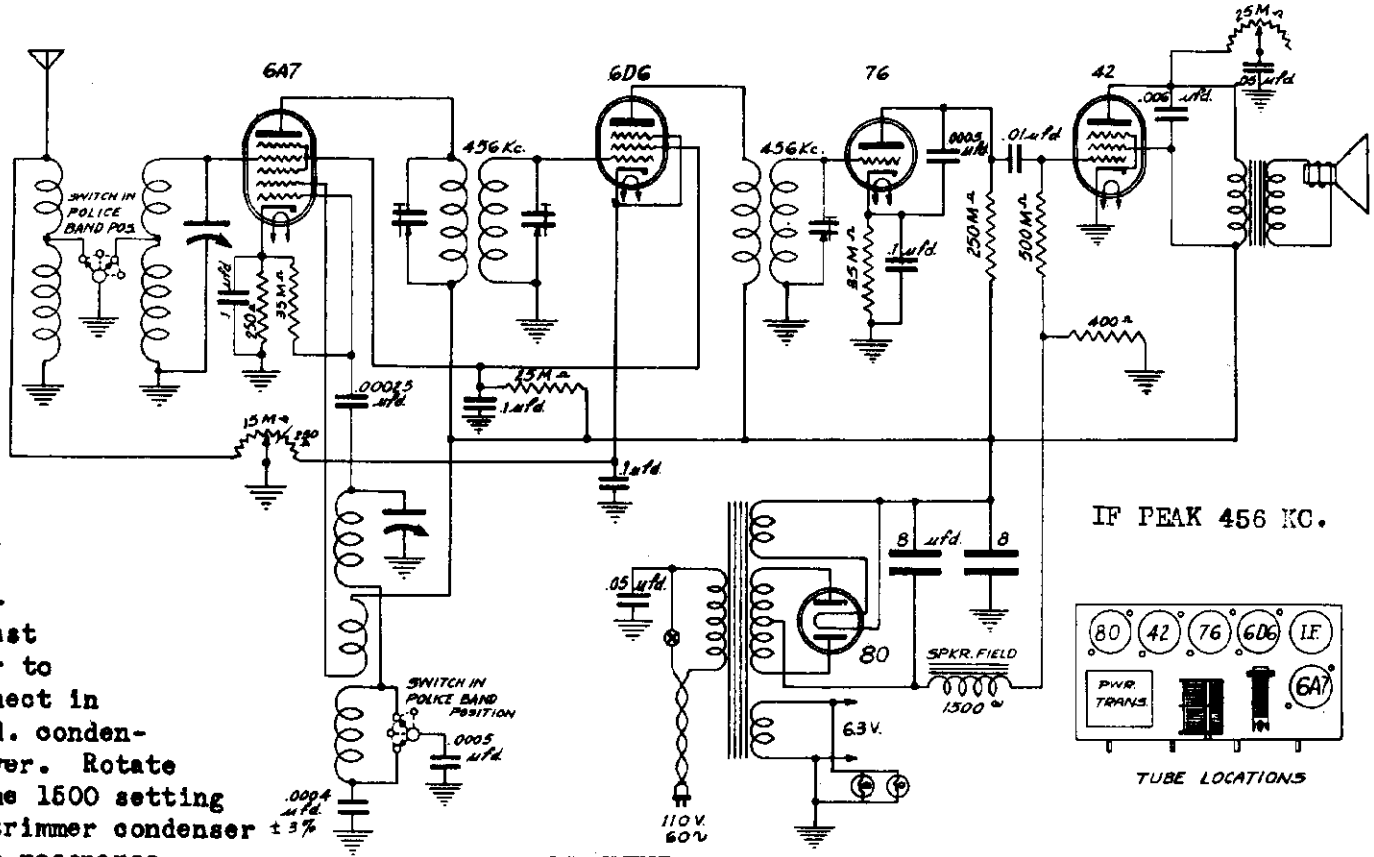

R. F. ALIGNMENT:

With the wave-change switch in broadcast position, set oscillator to 1500 kilocycles and connect in series with a .00025 mfd. condenser to Antenna of receiver. Rotate variable condenser to the 1500 setting on the dial and adjust trimmer condenser of oscillator section to resonance.

The oscillator section is the rear section of variable condenser. Re-set oscillator to 1400 kilocycle dial setting. Now adjust antenna section trimmer (front section) to resonance. Set oscillator to 600 and 1000 kilocycles and check alignment at these frequencies. If necessary, bend plates of antenna section for low frequency alignment. Do not bend plates of oscillator section. No adjustment should be necessary for the police band. However, set test oscillator to 1.6 and 4.0 megacycles and check alignment at these frequencies.

I. F. ALIGNMENT:

Connect an output meter to the screen and plate terminals of the 42 tube. Rotate gang condenser to maximum capacity and turn volume control on full. Now connect a test oscillator in series with a .00025 mfd. condenser to the grid of the 6D6 tube. Set the test oscillator to 456 kilocycles. Tune the second I.F. transformer to 456 kc. by adjusting the trimmer across the secondary of the I.F. transformer. This trimmer is located under the chassis. Then connect the oscillator to the grid of the 6A7 tube and adjust the first I.F. trimmers to resonance.

RADOLEK CO.

MODEL 11935
Schematic

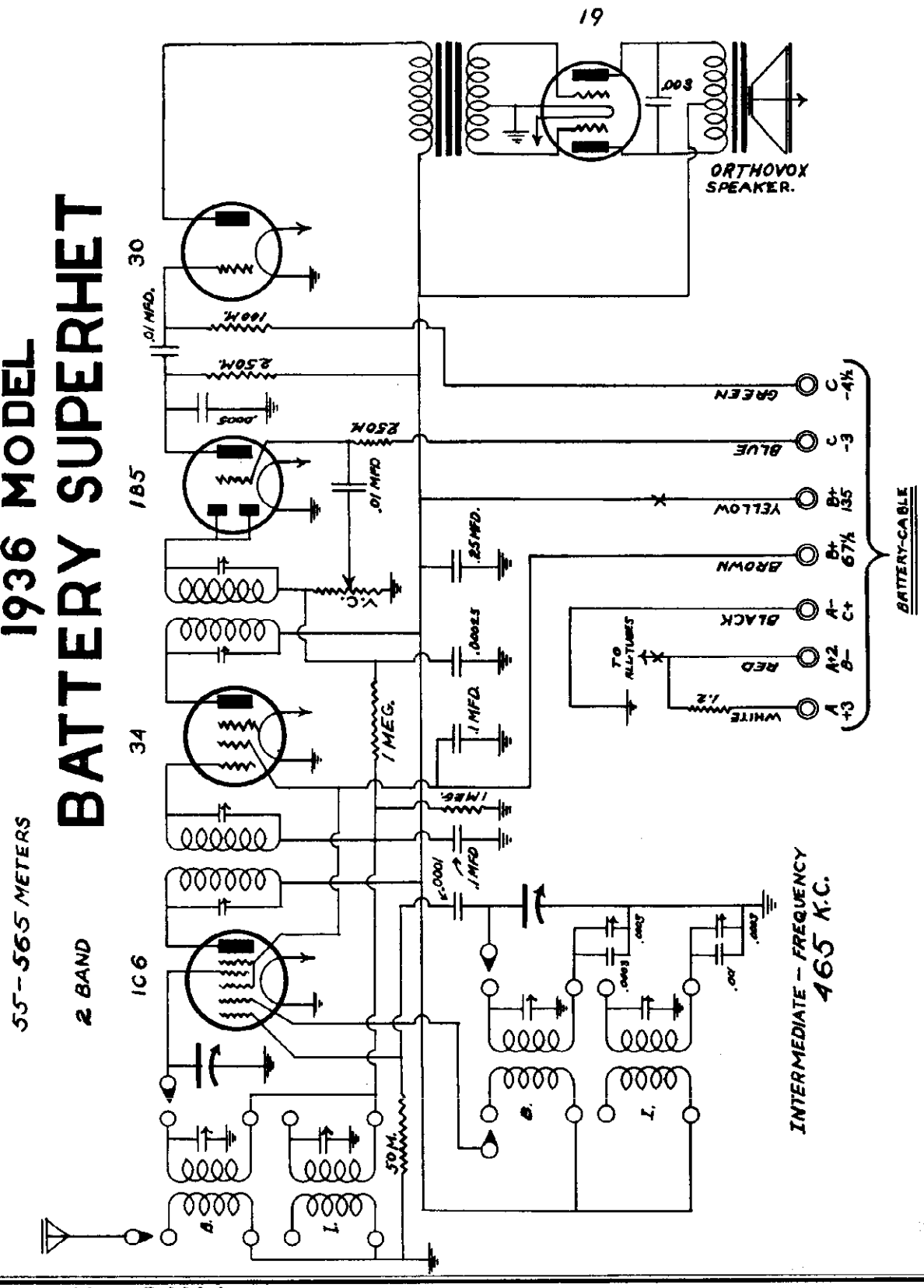

©John F. Rider, Publisher

MODEL 11947
Schematic
Alignment

RADOLEK CO.

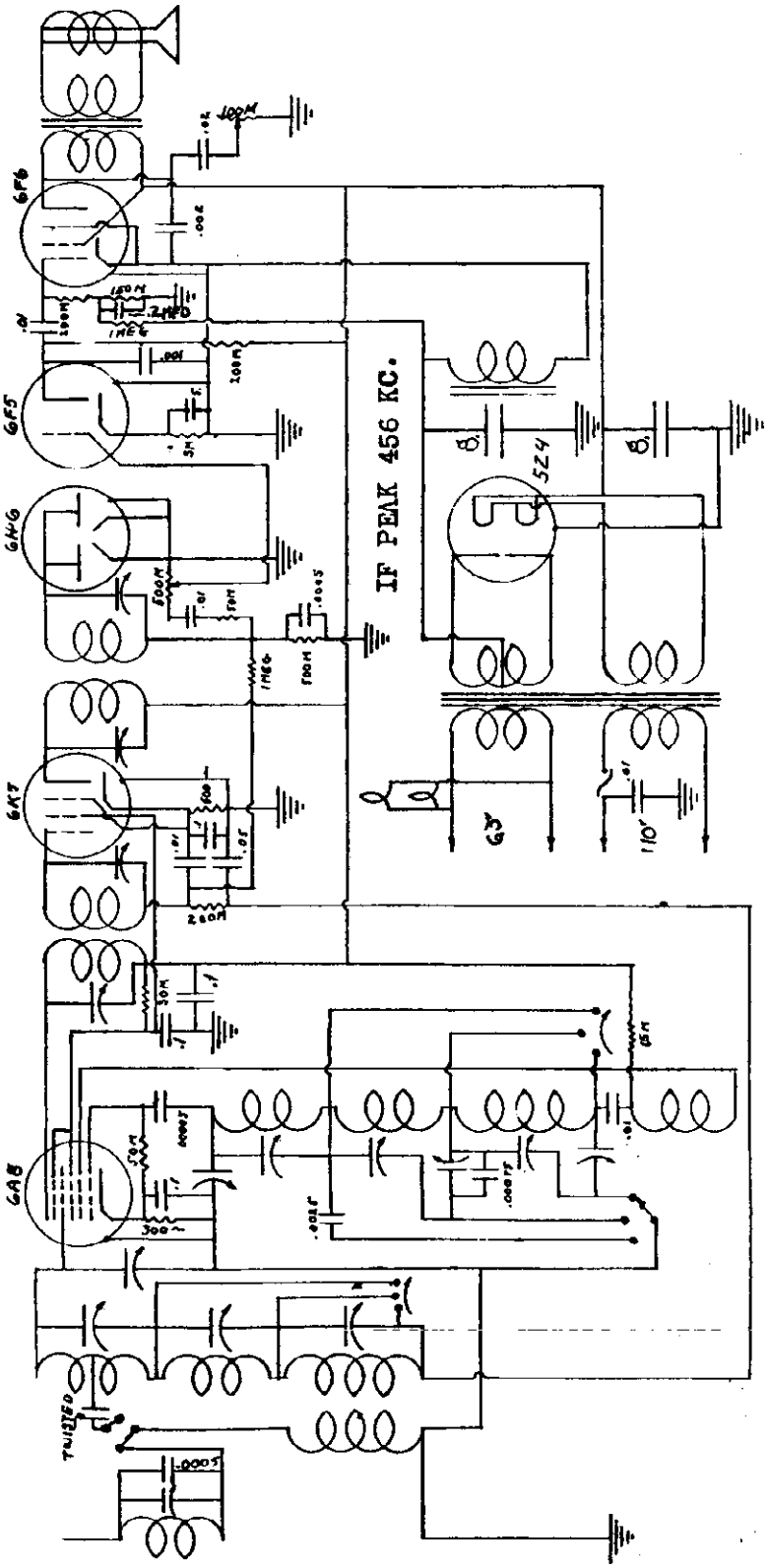

SERVICE NOTES: If the radio fails to operate when unpacked, or stops working after a few days, proceed as follows: (1) Have the tubes checked. (2) Remove the chassis from the cabinet and check for loose connections. (3) Have a competent "Radio Service Man" check over entirely. This set left the factory carefully inspected. Should rephasing be necessary, attach the output lead from a 456 KC test oscillator to the grid cap of the converter tube, keep the signal to a very low audible value and carefully adjust the two trimmer screws in the top of I. F. coils to loudest volume. If an output meter is available it should be used across the voice coil leads at the speaker transformer. An oscillator covering a frequency from 550 KC to 16 megacycles should be used to rephase the R. F. The test oscillator output is attached to the aerial lead of the set. At all times keep the oscillator signal turned down to a low point of audibility. Trim the short-wave band first, next the intermediate band, and then the broadcast band, to a frequency near the high frequency end of the dial in each case. Looking at underside of chassis with controls toward front the trimmers on oscillator coil from right to left are short-wave, intermediate and broadcast, respectively. The trimmers for the R. F. are in can on topside of chassis and are in the same order with short-wave closest to base. The porcelain base trimmer in the center of chassis is the intermediate band padding condenser, and the porcelain base trimmer closest to front is for broadcast. These are adjusted to set the low frequency ends of the intermediate and broadcast bands to correct location on the dial.

NOTE: On E Models (European) the three-plate bakelite trimmer connected from porcelain trimmer to band switch is the long wave trimmer. The trimmer on the left of oscillator coil is turned tight and should not need adjustment. The porcelain trimmer in center of chassis is long wave, and the one closest to front is broadcast. These two padding condensers are adjusted to set the low frequency ends of the broadcast and long wave bands to correct location on the dial.

PHONOGRAPH: Install a single pole double-throw toggle switch near the 75 tube, disconnect the .01 mfd. condenser from the volume control and connect to one side of switch, connect the volume control to center terminal of the switch, connect one side of the phonograph pickup to remaining side of the switch and the other side of the pickup to "B" minus.

©John F. Rider. Publisher

Socket Voltage

REMLER COMPANY, LTD.

MODEL 37
Schematic

VOLTAGES TO CHASSIS - NO SIGNAL.

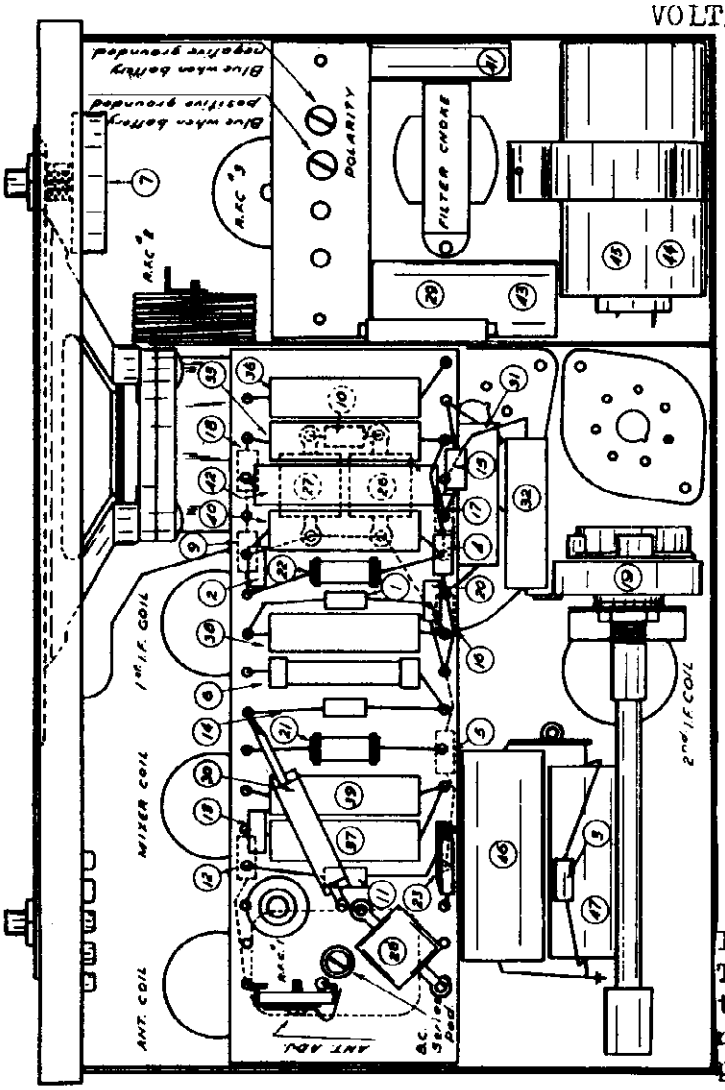

	6 Volt
Battery, hot side	
Plate supply from gen.	215
6K7 - R.F. Plate	215
6K7 - R.F. Screen	80
6K7 - R.F. Cathode	3
6A8 - Mixer - Plate	215
6A8 - Mixer - Screen	80
6A8 - Cathode	3
6A8 - Oscillator Plate	150
6K7 - I.F. Plate	215
6K7 - I.F. Screen	80
6K7 - I.F. Cathode	3
6Q7 - Det. A.V.C. Plate	85
6Q7 - Det. A.V.C. Grid	1.5
6C5 - A.F. Plate	155
6C5 - A.F. Cathode	9
6F6 - Power Plate	195
6F6 - Screen	215
6F6 - Grid	15

Battery current 6 7-Amp.

A dynamotor mounted in the receiver is used for plate power supply. This unit does not require lubrication. All leads from this power unit are brought to a termina strip as shown in Figure 1.

The short wave circuit trimmers ar located in the R.F. shield can tops. The I.F. trimmers are in the I.F. transformer shields. Use a weak sig nal, or oscillator input, and an out put meter when sligning the set.

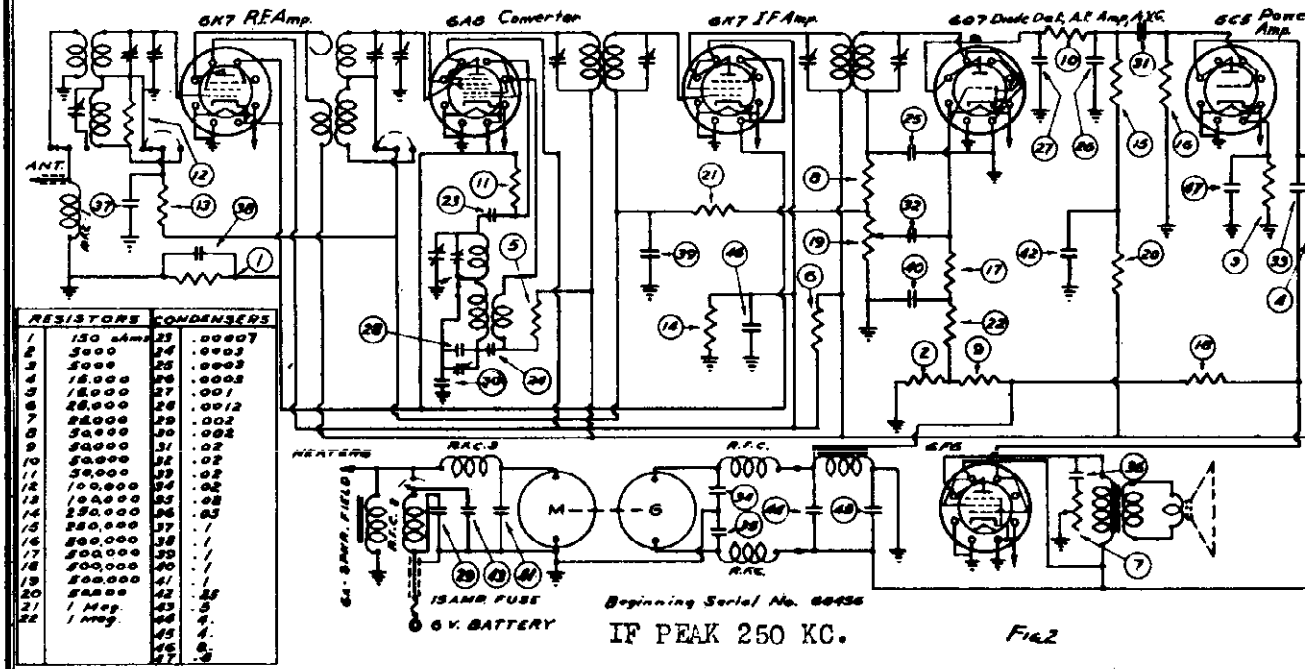

RESISTORS		CONDENSERS	
1	150 ohms	23	.00007
2	5000	24	.0003
3	5000	25	.0003
4	15,000	26	.0003
5	15,000	27	.001
6	25,000	28	.0012
7	25,000	29	.002
8	30,000	30	.002
9	50,000	31	.02
10	50,000	32	.02
11	50,000	33	.02
12	100,000	34	.02
13	100,000	35	.02
14	250,000	36	.02
15	250,000	37	.1
16	500,000	38	.1
17	500,000	39	.1
18	500,000	40	.1
19	500,000	41	.1
20	5 Meg	42	.25
21	1 Meg	43	.5
22	1 Meg	44	1.
		45	1.
		46	6.
		47	.5

IF PEAK 250 KC.

Fig. 2

©John F. Rider, Publisher

MODEL 40(Late)
Beginning Serial #66746
MODEL 41
Beginning Serial #60411

REMLER COMPANY, LTD.

MODEL 71
Beginning Serial #75639
Schematics, Voltage, Data

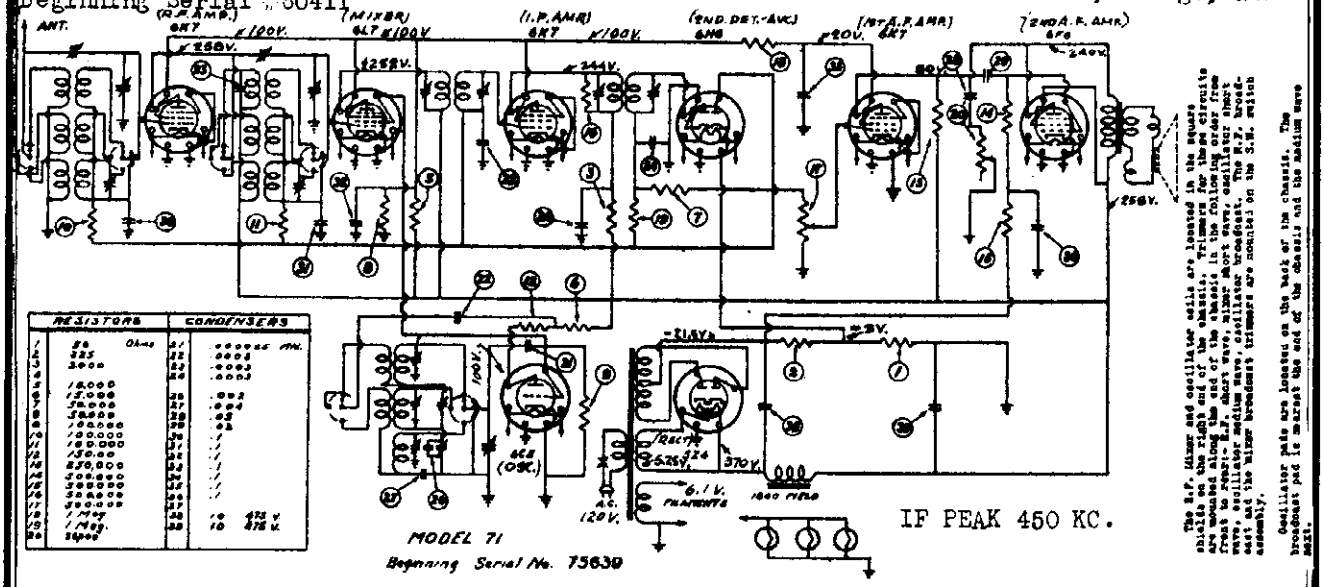

The R.F. Mixer and oscillator coils are located in the square shields on the right end of the chassis. Trimmers for these circuits are accessible from the front of the chassis through holes in the front apron. The short wave oscillator trimmer is for the 7mc-14mc short wave range, oscillator broadcast. The R.F. broadcast and the mixer broadcast trimmers are mounted on the S.W. switch assembly.

Oscillator pads are located on the back of the chassis. The broadcast pad is located at the end of the chassis and the medium wave unit.

Model 40 (late)

The first I.F. transformer is in the aluminum shield at the back of the variable condenser. The mixer coil is trimmed by the back section trimmer and is located over the variable condenser. The oscillator coil is within the chassis and is trimmed by the front section trimmer on the variable condenser. The second I.F. transformer is also located within the chassis and may be trimmed by the condensers mounted thereon. The intermediate frequency used is 450 kilocycles.

Model 41

The antenna and mixer coils are located over the variable condenser, while the oscillator coils are at the rear of the condenser. The trimmer for the short-wave section of the mixer coil is located at the end of the form. The oscillator series padding condenser for the broadcast range is mounted at the right end of the chassis. The I.F. transformers are located within the chassis. In moving the chassis from the cabinet, pry off the knobs with a wooden screwdriver and pull off the pointer from the condenser shaft.

D.C. VOLTAGES: (No signal; volume control full on)
Readings taken with 1000-Ohm per volt meter.

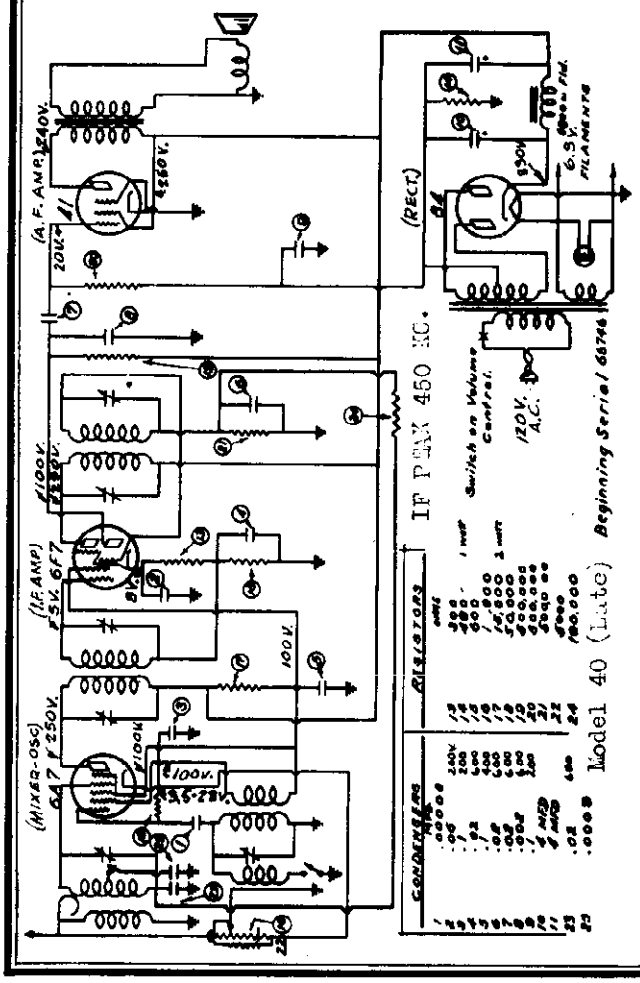

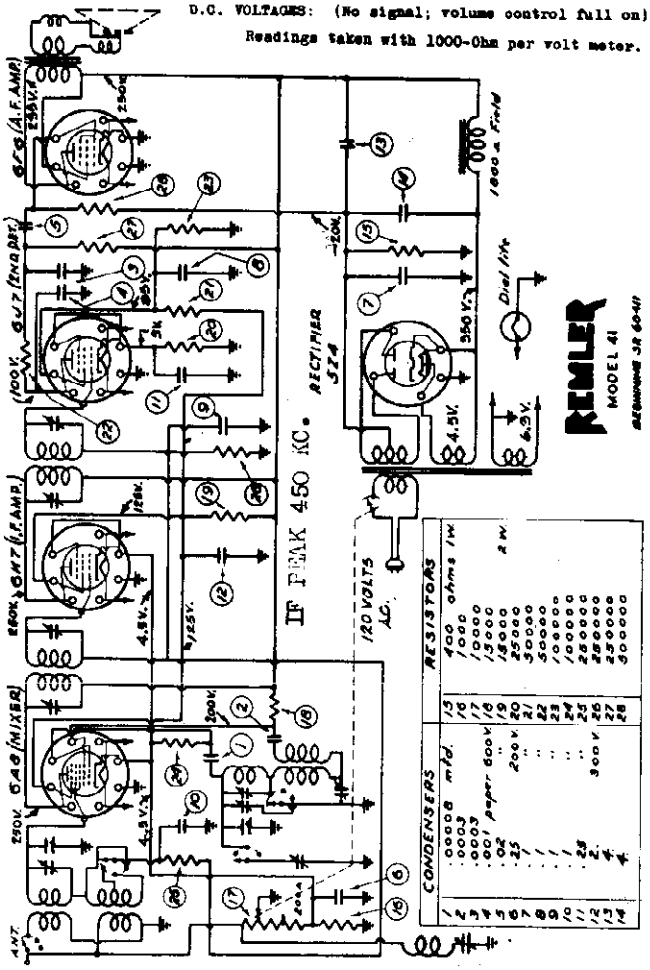

MODEL 43
Beginning Serial #62761
Schematics, Voltage, Data

REMLER COMPANY, LTD.

MODEL 42 SW
Beginning Serial #57061

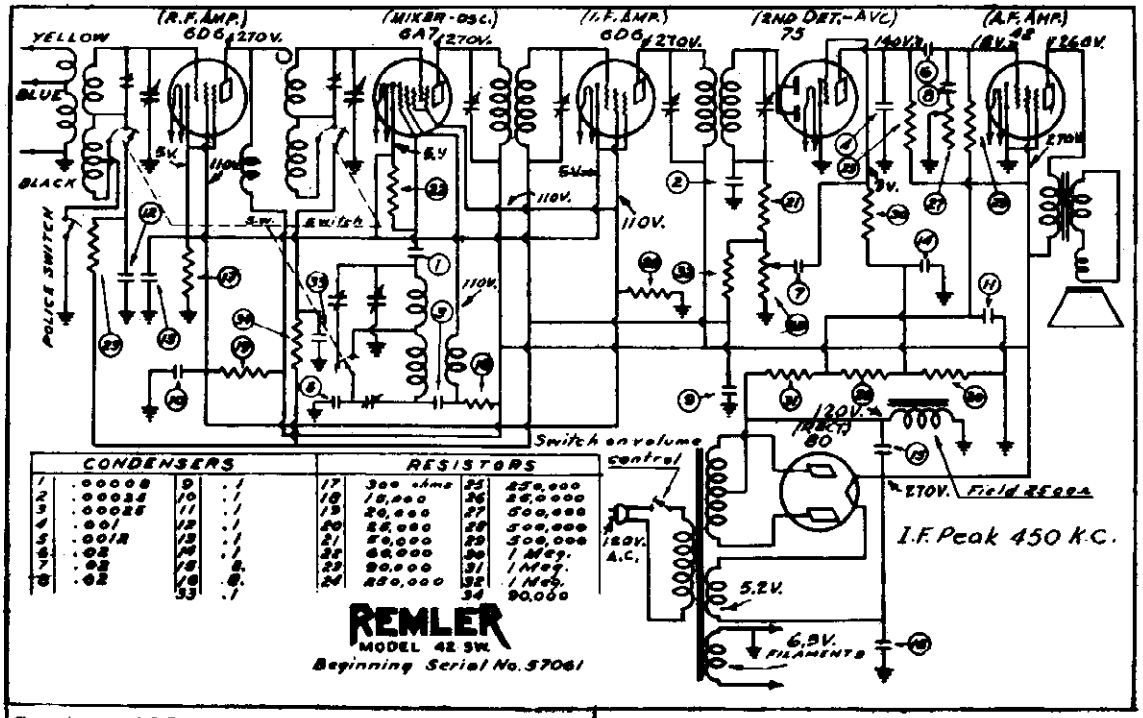

CONDENSERS				RESISTORS			
1	.00008	9	.1	17	300 ohms	25	250,000
2	.00014	10	.1	18	10,000	26	25,0000
3	.00025	11	.1	19	20,000	27	500,000
4	.001	12	.1	20	25,000	28	500,000
5	.0018	13	.1	21	50,000	29	500,000
6	.02	14	.1	22	60,000	30	1 Meg.
7	.02	15	.1	23	90,000	31	1 Meg.
8	.02	16	.1	24	250,000	32	1 Meg.
		33	.1			34	90,000

The antenna and R.F. coils are in the shielding can nearest the front of the chassis and the mixer coil is in the shield within the chassis. The first I.F. transformer is mounted in the shield between the 6A7 and 6D6 tubes; while the second I.F. transformer is located between the 6D6 and 75 tubes. The oscillator coil is within the set and is trimmed by the trimming condenser mounted adjacent to the coil.

Trimmers for the short wave position are located at the top of the R.F. coil and on the right end of the chassis within the coil shields. No trimmer is provided for the oscillator short wave position. The oscillator padding condenser for the broadcast position is located at the right end of the chassis.

D.C. VOLTAGES (No signal):

Readings taken with 1000-Ohm per volt meter.

The R.F. stage coils are located in the shield at the back of the variable condenser and the mixer coils in the shield between the 6K7 R.F. amplifier tubes and the first I.F. stage. The oscillator coils are within the shield nearest the front of the chassis. Trimmers for the oscillator coils are mounted at the bottom of the coil and are accessible from within the chassis. The B.C. trimmer is nearest the front of the chassis, with the M.W. and S.W. sections next in order from front to rear. The trimmers for the S.W., R.F. and mixer coils are located in the tops of the respective coil shields. The trimmer nearest the back of the gang switch trims the M.W. R.F. coil, while the trimmer between the first and second switch sections is a coupling condenser from the R.F. to mixer stages.

Poor performance on the low frequency portion of the S.W. range may be traced to a weak 6A8 tube. Excessive hum may be due to a defective 6J7 or 5Z4 tube.

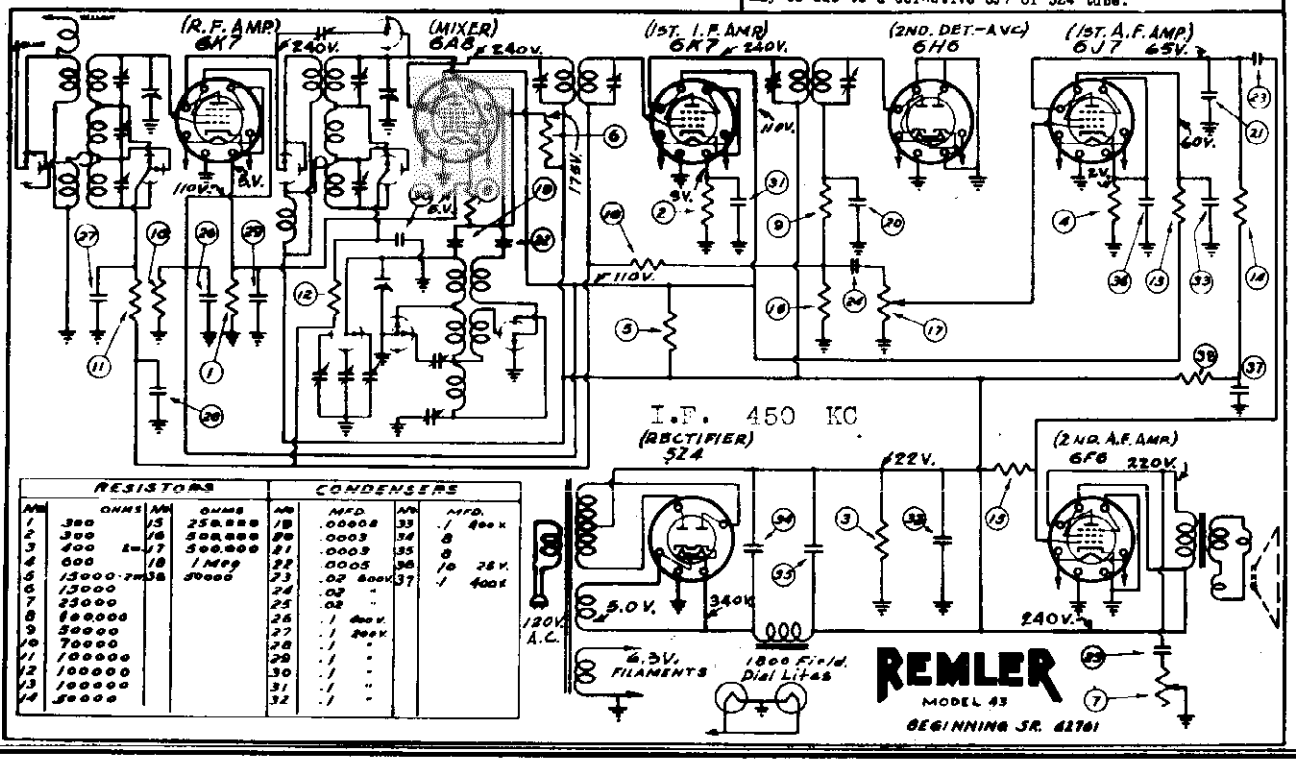

RESISTORS				CONDENSERS			
No.	OHMS	No.	OHMS	No.	MFD.	No.	MFD.
1	300	15	250,000	19	.00008	33	.1 400 v.
2	300	16	500,000	20	.0003	34	"
3	400 1w.	17	500,000	21	.0003	35	"
4	600	18	1 Meg	22	.0005	36	.1 25 v.
5	15000 2w.	38	50000	23	.02 400v.	37	.1 400v.
6	15000			24	.02 "		
7	25000			25	.02 "		
8	100,000			26	.1 400v.		
9	50000			27	.1 200v.		
10	70000			28	.1 "		
11	100000			29	.1 "		
12	100000			30	.1 "		
13	100000			31	.1 "		
14	50000			32	.1 "		

©John F. Rider, Publisher

MODEL 51
Schematics, Voltage, Data

REMLER COMPANY, LTD.

MODEL 45
Beginning Serial #72409

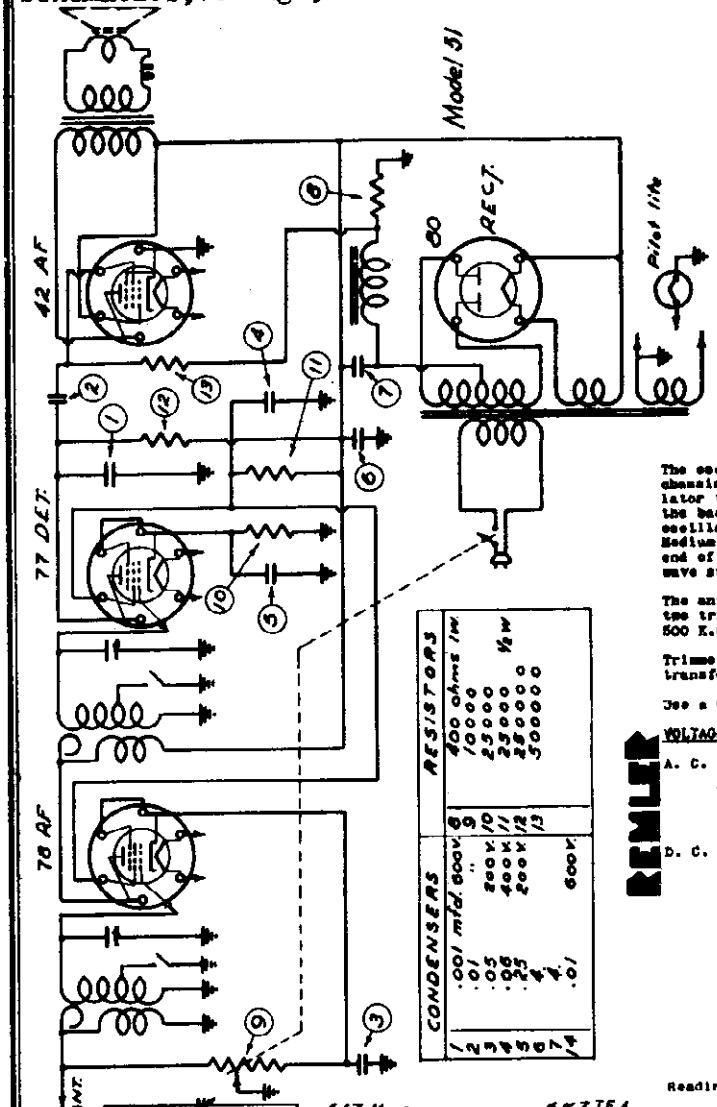

A.C. VOLTAGES: MODEL 51

Line		120 volts
Secondary		670 volts
Filaments -	#80	5.5 "
	#77 - 78 - 42	6.3 "

D.C. VOLTAGES: Full volume, no signal

From ground to:

80	Rectifier filament	235 volts
42	Plate	225 "
42	Screen grid	235 "
42	Grid - bias	18.5 "
77	Plate	90 "
77	Screen grid	135 "
77	Cathode	7 "
78	Plate	235 "
78	Screen grid	135 "
78	Cathode	3 "
Voltage across field		115 "

Voltages read with 1000-Ohm per volt meter

Model 45

The oscillator coils are located in the square shield on the end of the chassis and the mixer coils in the square can adjacent to the 6C5 oscillator tube. Trimmers for these coils are mounted within the chassis along the back edge. From the side of the chassis toward the center these are, oscillator Short wave, oscillator Medium wave; oscillator Broadcast, mixer Medium wave, mixer Short wave. The oscillator series pad is mounted on the end of the chassis. The mixer broadcast trimmer is mounted on the Short wave switch.

The antenna filter system is located near the front of the chassis. The two trimming condensers are adjusted for minimum response at 450 K.C. and 500 K.C. respectively.

Trimmers for the I. F. transformers are adjustable through holes in the transformer shield cans. The I. F. frequency is 450 K.C.

Use a weak signal or oscillator input when adjusting the trimmers.

VOLTAGE READINGS FOR SERVICE WORK FOLLOW:

A. C. VOLTAGES:

Line		120 volts
Filaments	6L7, 6K7	6.3 "
	6C5, 6F6, 6H6, 6F5	6.3 "
Filament	5Z4	5 "

D. C. VOLTAGES: (No Signal)
From ground to:

5Z4	Rectifier filament	340 "
6F6	Plate	235 "
6F6	Screen grid	245 "
6F6	Grid bias supply	20 "
6F5	Plate	115 "
6F5	Cathode	2 "
6K7	I. F. Plate	235 "
6K7	I. F. Screen grid	100 "
6K7	I. F. Grid bias	3.5 "
6L7	Mixer Plate	245 "
6L7	Screen Grid	100 "
6L7	Grid bias	3.5 "
6C5	Oscillator Plate	140 "

Readings taken with 1000-Ohm per volt meter.

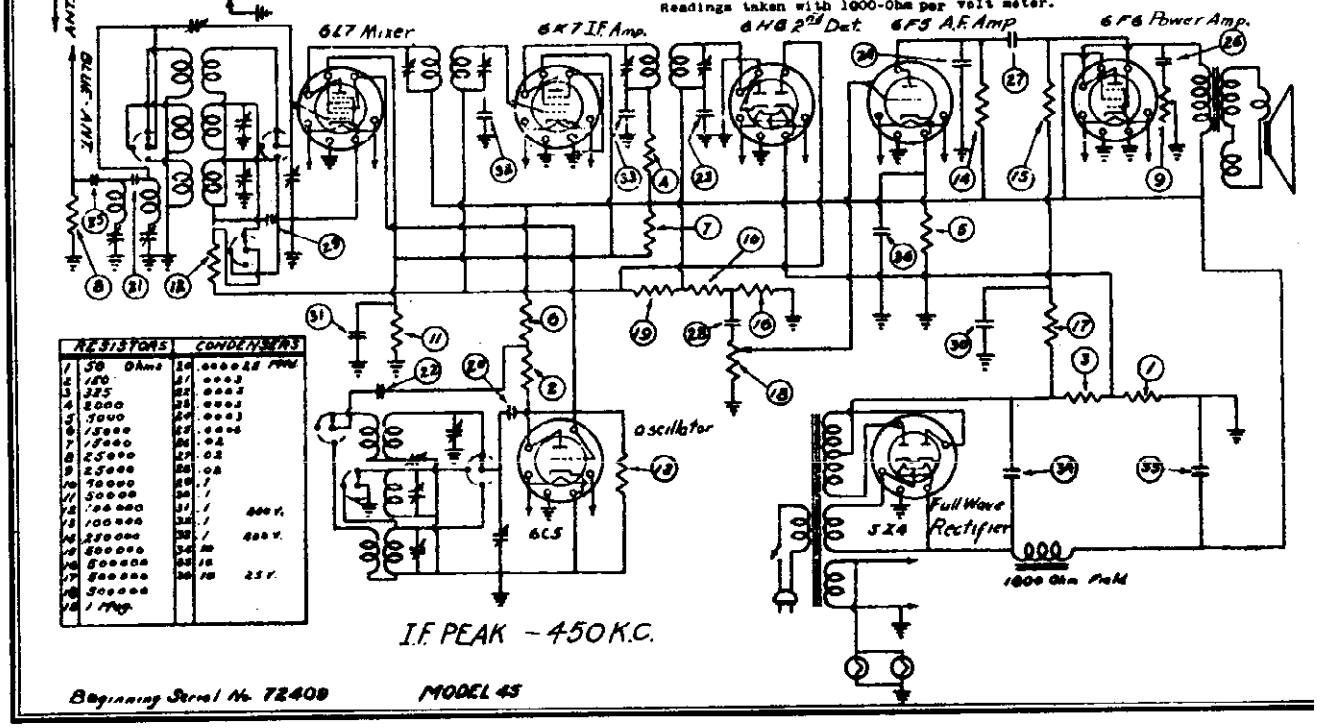

Beginning Serial No. 72409 MODEL 45

©John F. Rider, Publisher

MODEL 60
Beginning Serial #72250

REMLER COMPANY, LTD.

MODEL 62
Beginning Serial #60600

Model 60 Schematics, Voltage, Data

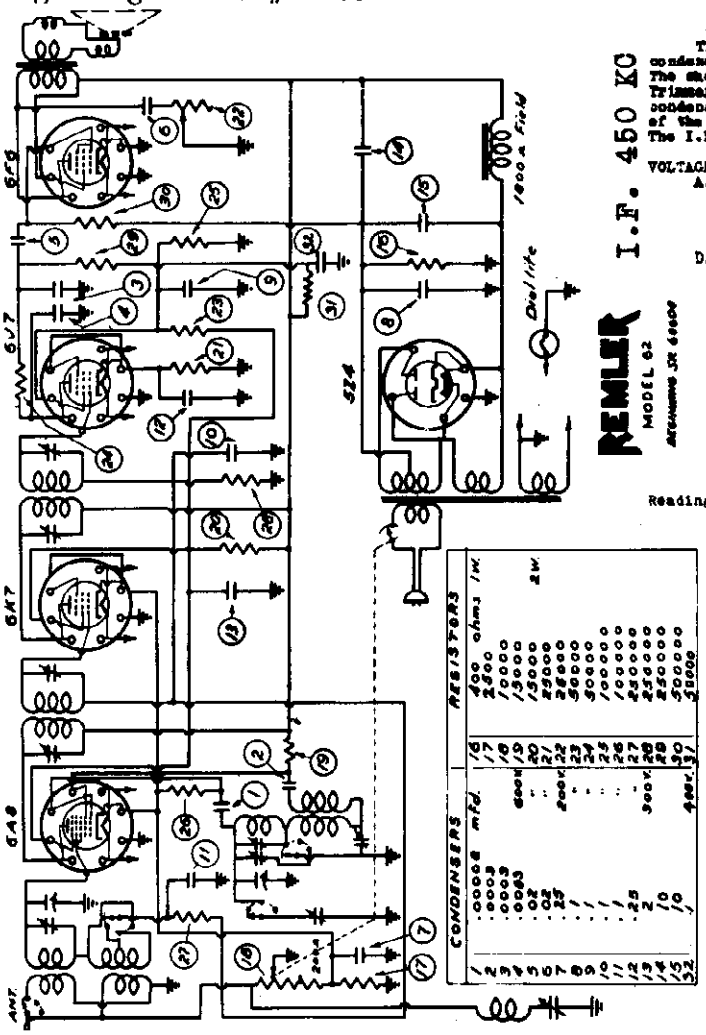

The antenna and mixer coils are located adjacent to the variable condenser while the oscillator coil is located under the condenser. The short-wave coils are mounted near the broadcast oscillator coil. Trimmers for the oscillator and mixer circuits are on the variable condenser. The first I.F. transformer is in the shield at the rear of the chassis while the second I.F. transformer is below the chassis. The I.F. frequency is 450 K.C.

VOLTAGE READINGS FOR SERVICE WORK FOLLOW: Model 60

A.C. Voltages

Line	120
Filaments	6
Filament rectifier	4.5

D.C. Voltages (No signal)
From ground to:

80	Rectifier filament	300
42	Plate	200
42	screen grid	215
42	Grid bias supply	16.5
75	Plate	180
75	Cathode	1.5
6D6	Plate	215
6D6	Screen grid	100
6D6	Cathode	4.5
6A7	Plate	215
6A7	Screen grid	100
6A7	Cathode	4.5
6A7	Oscillator anode	100

Readings with 1000 Ohm per volt meter.

Model 62

VOLTAGE READINGS FOR SERVICE WORK FOLLOW:

A.C. VOLTAGES:

Line	120 volts
Filaments, 6A8, 6K7, 6J7 and 6F6	6.3 "
Filaments, 5Z4	4.5 "

D.C. VOLTAGES: (No signal; volume control full on)

From ground to:

5Z4	Rectifier filament	360 volts
6F6	Plate	255 "
6F6	Screen grid	250 "
6F6	Grid bias supply	20 "
6J7	Plate	100 "
6J7	Screen grid	85 "
6J7	Cathode	5 "
6K7	Plate	250 "
6K7	Screen grid	125 "
6K7	Cathode	4.5 "
6A8	Amplifier plate	250 "
6A8	Oscillator plate	200 "
6A8	Screen grid	125 "
6A8	Cathode	4.5 "

Readings taken with 1000-Ohm per volt meter.

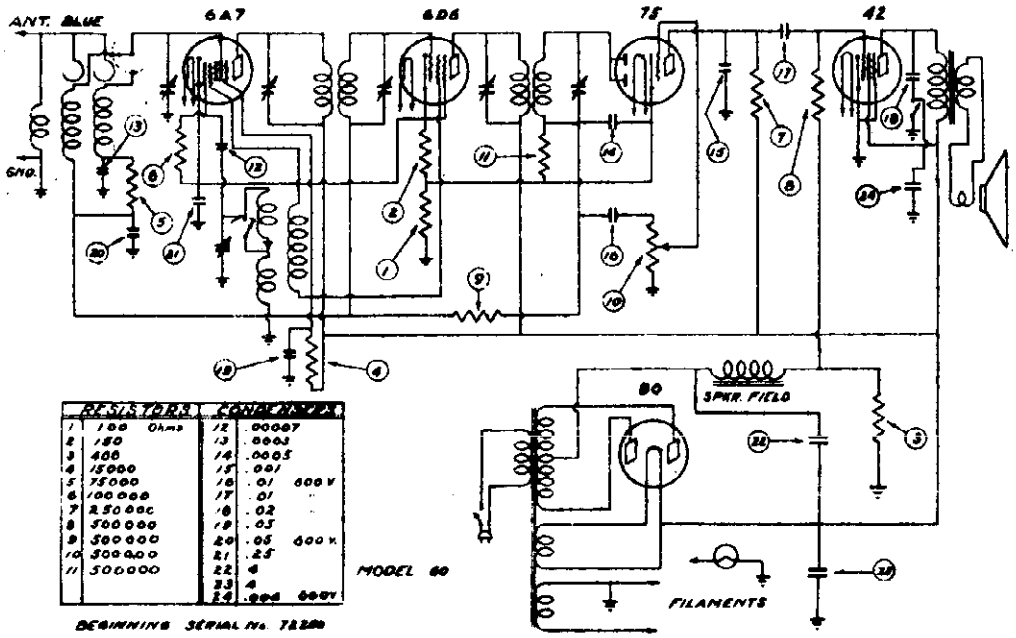

RESISTORS		CONDENSERS		
1	100 Ohms	12	.00007	
2	180	13	.0003	
3	400	14	.0005	
4	15000	15	.001	
5	75000	16	.01	600 V
6	100 000	17	.01	
7	250 000	18	.02	
8	500 000	19	.05	
9	500 000	20	.05	600 V.
10	500 000	21	.25	
11	500 000	22	4	
		23	4	
		24	.004	600V

The antenna and mixer coils are located adjacent to the variable condenser, while the oscillator coils are mounted below the chassis floor. The trimmer for the short-wave section of the mixer coil is located on top of the coil form. The oscillator series padding condenser for the broadcast range is mounted at the right end of the chassis. The I.F. transformers are located within the two shield cans; trimmers for adjusting these are located in the tops of the shield cans. In removing the chassis from the cabinet, pry off the knobs with a wooden screwdriver where set screw knobs are not used.

©John F. Rider, Publisher

MODEL 64
Beginning Serial #73914

REMLER COMPANY, LTD.

MODEL 63
Beginning Serial #69116

Schematics, Voltage, Data

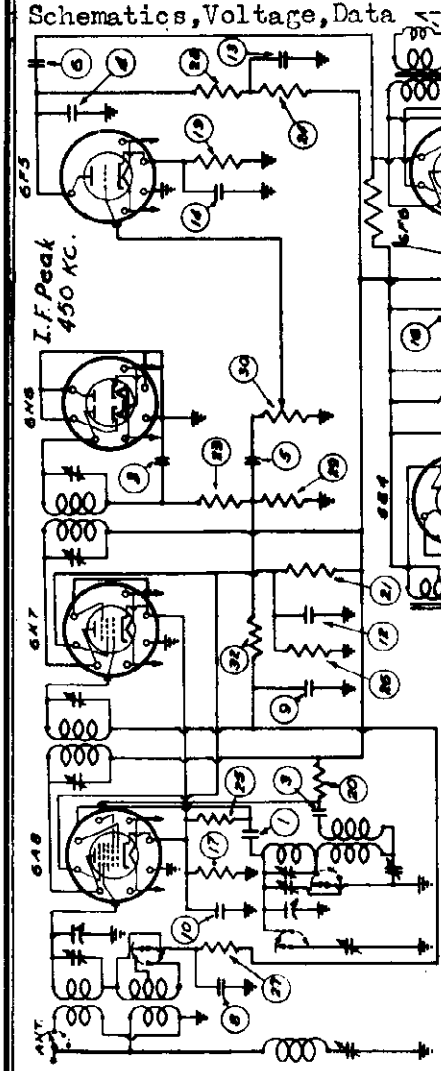

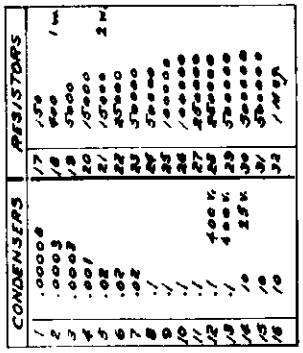

Model 64

The antenna and mixer coils are located adjacent to the variable condenser, while the oscillator coils are mounted below the chassis floor. The trimmer for the short-wave section of the mixer coil is located on top of the coil form. The oscillator series padding condenser for the broadcast range is mounted at the right end of the chassis. The I.F. transformers are located within the two shield cans; trimmers for adjusting these are located in the tops of the shield cans. In removing the chassis from the cabinet, pry off the knobs with a wooden screwdriver where set screw knobs are not used.

The I. F. frequency is 450 K. C.

VOLTAGE READINGS FOR SERVICE WORK FOLLOW: Model 64

A. C. VOLTAGES:

Line	120 volts
Filaments, 6A8, 6K7, 6H6, 6F5, 6F6	6.9 "
Filament, 5Z4	4.5 "

D. C. VOLTAGES: (No signal)

From ground to:

5Z4 Rectifier filament	345 volts
6F6 Plate	280 "
6F6 Screen Grid	240 "
6F6 Grid bias supply	19 "
6F5 Plate	115 "
6F5 Cathode	1.5 "
6K7 Plate	240 "
6K7 Screen Grid	120 "
6K7 Grid bias supply	3 "
6A8 Amplifier plate	240 "
6A8 Oscillator plate	150 "
6A8 Screen Grid	120 "
6A8 Grid bias supply	3 "

Readings taken with 1000-Ohm per volt meter.

VOLTAGE READINGS FOR SERVICE WORK FOLLOW: Model 63

A.C. VOLTAGES:

Line	120 volts
Filaments, 6A8, 6K7, 6H6, 6F5, 6F6	6.3 "
Filaments, 5Z4	4.5 "

D.C. VOLTAGES: (No signal; volume control full on)

From ground to:

5Z4 Rectifier filament	350 volts
6F6 Plate	235 "
6F6 Screen grid	250 "
6F6 Grid bias supply	18 "
6F5 Plate	100 "
6F5 Cathode	1.5 "
6K7 Plate	250
6K7 Screen grid	125 "
6K7 Cathode	4.5 "
6A8 Amplifier plate	250 "
6A8 Oscillator plate	200 "
6A8 Screen grid	125 "
6A8 Cathode	4.5 "

Readings taken with 1000-Ohm per volt meter.

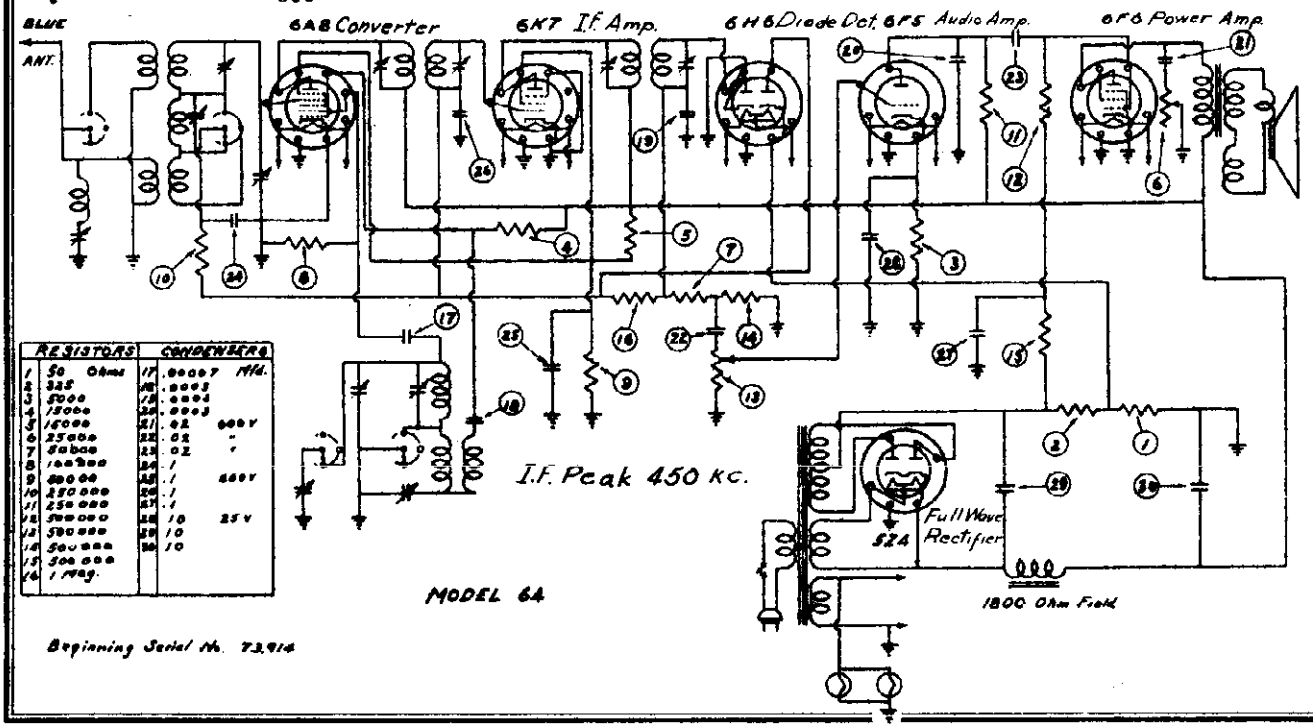

RESISTORS		CONDENSERS	
1	50 Ohms	17	.00007 Mfd.
2	325	18	.0003
3	5000	19	.0004
4	13000	20	.0005
5	15000	21	.01 600 V
6	25000	22	.01 "
7	50000	23	.02 "
8	100000	24	.1
9	200000	25	.1 600 V
10	250000	26	.1
11	250000	27	.1
12	500000	28	.10 25 V
13	500000	29	.10
14	500000	30	.10
15	500000		
16	1 Meg.		

©John F. Rider, Publisher

MODEL 88
Schematics, Data

REMLER COMPANY, LTD.

MODEL 91
Beginning Serial #72759

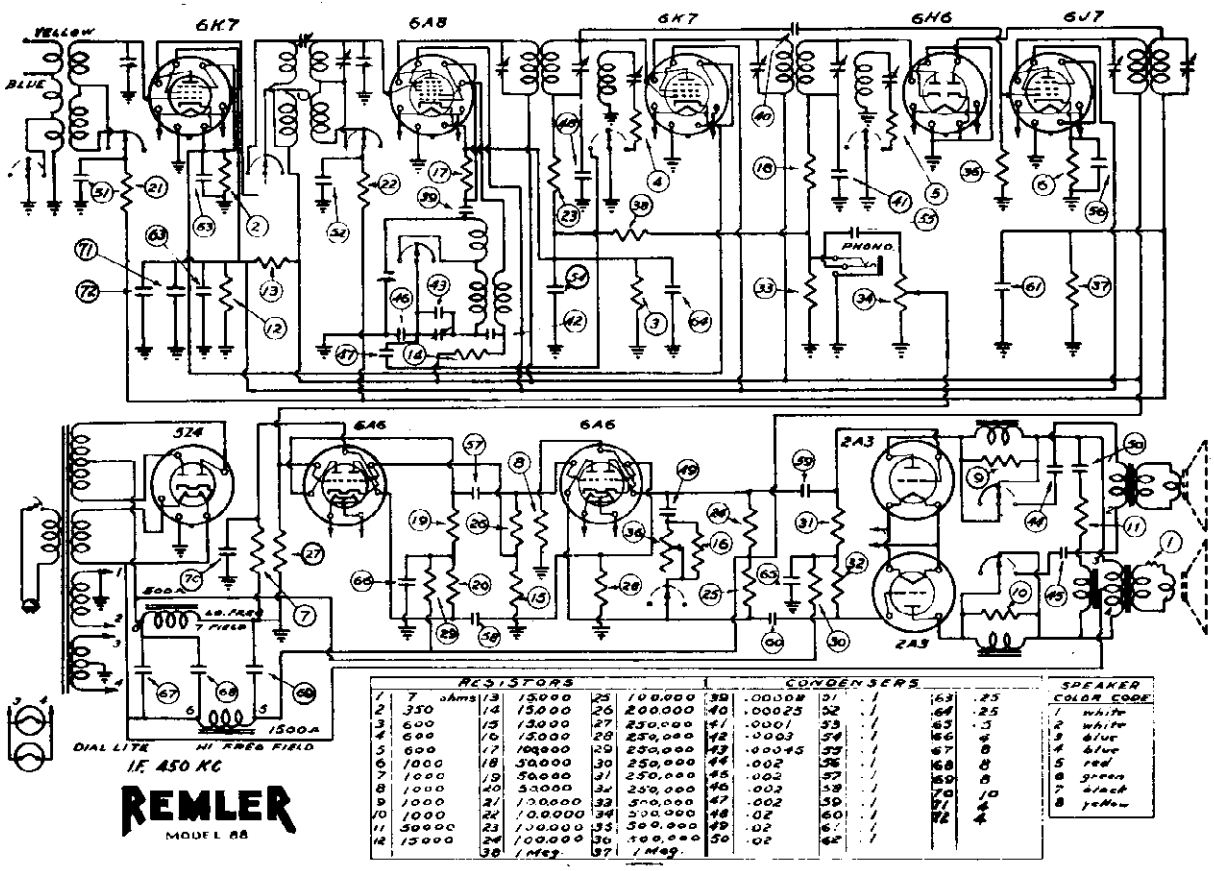

RESISTORS						CONDENSERS						SPEAKER COLOR CODE
1	7 ohms	13	15000	25	100,000	33	.00008	51	.1	63	.25	1 white
2	350	14	150000	26	200,000	40	.00025	52	.1	64	.25	2 white
3	600	15	130000	27	250,000	41	.0001	53	.1	65	.5	3 blue
4	600	16	150000	28	250,000	42	.0003	54	.1	66	4	4 blue
5	600	17	100000	29	250,000	43	.00045	55	.1	67	8	5 red
6	1000	18	50000	30	250,000	44	.002	56	.1	68	8	6 green
7	1000	19	50000	31	250,000	45	.002	57	.1	69	8	7 black
8	1000	20	50000	32	250,000	46	.002	58	.1	70	10	8 yellow
9	1000	21	100000	33	500,000	47	.002	59	.1	71	4	
10	1000	22	1000000	34	500,000	48	.02	60	.1	72	4	
11	50000	23	100,000	35	500,000	49	.02	61	.1			
12	15000	24	100,000	36	500,000	50	.02	62	.1			
		38	1 Meg.	37	1 Meg.							

The location of the antenna coil is near the variable condenser. The oscillator coil is mounted under the chassis with the short wave coil adjacent. Trimmers for the broadcast band are located on the side of the variable condenser. The I. F. transformers are within the square shields on the top of the chassis with trimmers adjustable thru holes in the tops of the shields. The I. F. frequency is 450 K. C.

VOLTAGE READINGS FOR SERVICE WORK:

With fresh batteries, no signal.

From chassis to:-

33	power amplifier	tube	plate	118 volts
33	" "	"	screen	122 "
33	" "	"	grid bias	13 "
1F6	duplex diode	"	plate	45 "
1F6	" "	"	screen	80 "
1F6	" "	"	grid bias	1 "
1A4	I.F. amplifier	"	plate	122 "
1A4	" "	"	screen	90 "
1A4	" "	"	grid bias	3.5 "
1C6	pentagrid converter	"	plate	122 "
1C6	" "	"	screen	90 "
1C6	" "	"	osc. anode	75 "
1C6	" "	"	grid bias	3.5 "

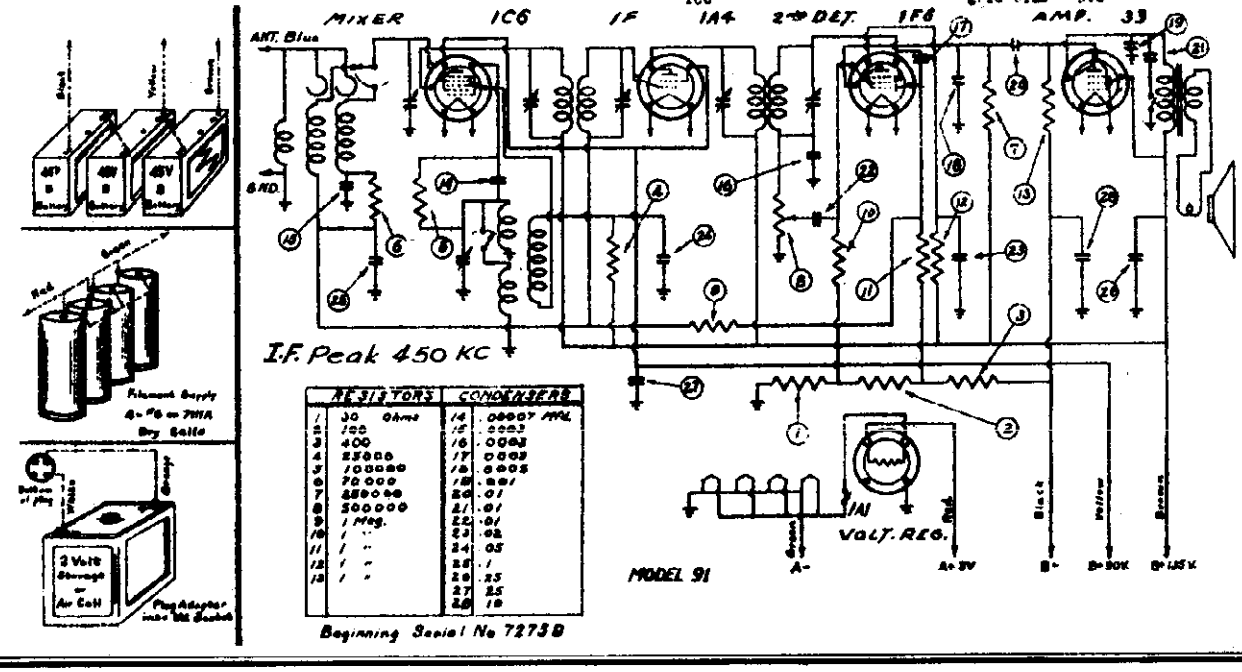

RESISTORS		CONDENSERS	
1	30 Ohms	14	.00007 MFD.
2	100	15	.0003
3	400	16	.0003
4	25000	17	.0003
5	100000	18	.0005
6	70,000	19	.001
7	2500.00	20	.01
8	500000	21	.01
9	1 Meg.	22	.01
10	1 "	23	.02
11	1 "	24	.05
12	1 "	25	.1
13	1 "	26	.25
		27	.25
		28	1.0

Beginning Serial No 72738

©John F. Rider, Publisher

REPUBLIC INDUSTRIES

MODEL 42
Schematic, Voltage
Socket, Parts List

TUBE VOLTAGES

Tube	Pl. to Gnd.	Scr. to Gnd.	K to Gnd.	2 Pl to Gnd.	2 G to Gnd.
6A7	105	40	1.0	105	.6
78	105	40	1.4		
75	40	--	.6		
43	98	105	15		
25Z5	Line Drop				
L-49B	49				

43 G. to Gnd. 0
Spkr. Field Voltage 120
B+ Voltage 105

CONDENSERS

C1	77-833	366 MMFD. Preselector Section of 3 Gang
C2	77-833	366 MMFD. Preselector Section of 3 Gang
C3	77-833	328 MMFD. Oscillator Section of 3 Gang
C4	75-2003	.01 Mfd. 400 V. Paper Antenna Series Cond.
C5	78-2010	3-30 MMFD. Police Band Preselector Trimmer
C6	78-2010	3-30 MMFD. Foreign Band Preselector Trimmer
C7	76-2002	.00005 Mfd. Mica Oscillator Grid Condenser
C8	75-2005	.1 Mfd. 200 V. Paper Oscillator Cathode Cond.
C9	78-2008	First I. F. Primary Trimmer
C10	78-2011	First I. F. Secondary Trimmer
C11	78-2009	Second I. F. Primary Trimmer
C12	75-2005	.1 Mfd. 200 V. Paper 78 Cathode By-Pass Cond.
C13	76-365	.001 Mfd. Mica 75 Plate Filter Condenser
C14	75-2003	.01 Mfd. 400 V. Paper Audio Feed Cond.
C15	75-2003	.01 Mfd. 400 V. Paper Tone Control Cond. on A-17
C16	75-2002	.004 Mfd. 600 V. Paper Output Plate Filter Cond.
C17	18-928	25 Mfd. 25 V. Elect. Output Cathode By-Pass Cond.
C18	75-2005	.1 Mfd. 200 V. Paper 75 Plate Ohm Filter Cond.
C19	75-2003	.01 Mfd. 400 V. Paper Audio Feed Condenser
C20	78-2011	.6 Mfd. 200 V. Paper B Supply By-Pass Cond.
C21	76-307	.0008 Mfd. Mica Diode Filter Condenser
C22	75-2005	.1 Mfd. 200 V. Paper Line By-Pass Condenser
C23	75-2006	.1 Mfd. 200 V. Paper A.V.C. Network By-Pass Cond.
C24	75-2005	.1 Mfd. 200 V. Paper Screen By-Pass Condenser
C25	18-2008	11 Mfd. 150 W.V. Dry Electrolytic Filter Cond.
C26	18-2008	4 Mfd. 150 W.V. Dry Electrolytic Filter Cond.
C27	18-2008	4 Mfd. 150 W.V. Dry Electrolytic Filter Cond.

CODE	PART NO.	RESISTORS
R1	53-898	50,000 Ohm Oscillator Grid Resistor
R2	53-1062	250 Ohm Oscillator Cathode Resistor
R3	53-1062	25,000 Ohm 6A7 & 78 Screen Resistor
R4	53-1063	500 Ohm 78 Cathode Resistor
R5	53-925	1 Meg Ohm A.V.C. Network Resistor
R6	19-1291	500,000 Ohm Volume Control & Switch
R7	53-925	500,000 Ohm Diode Resistor
R8	53-924	250,000 Ohm 75 Plate Resistor
R9	53-925	500,000 Ohm 43 Grid Resistor
R10	53-1062	500 Ohm 43 Cathode Resistor
R11	53-1122	40 Ohm 75 Cathode Resistor
R12	19-1317	250,000 Ohm Tone Control on Model A-17
P13	53-898	50,000 Ohm 75 Plate Ohm Resistor

		INDUCTANCES
L1	17-2106	Broadcast Oscillator Coil Assembly
L2	17-2106	Police Band Oscillator Coil Assembly
L3	17-2095	Foreign Band Oscillator Coil Assembly
L4	17-2100	Broadcast Preselector Coil Assembly
L5	17-2104	Police Band Preselector Coil Assembly
L6	17-2096	Foreign Band Preselector Coil Assembly
L7	68-2012	First I. F. Transformer Assembly
L8	17-2102	Second I. F. Transformer Assembly
L9	64-1260	6½" Speaker 43 Output Trans. on L10
L10	64-1260	6½" Speaker 3000 Ohm Field
L11	14-940	20 Henry Filter Choke

© John F. Rider, Publisher

MODEL 51
Schematic, Voltage

REPUBLIC INDUSTRIES

Socket, Parts List

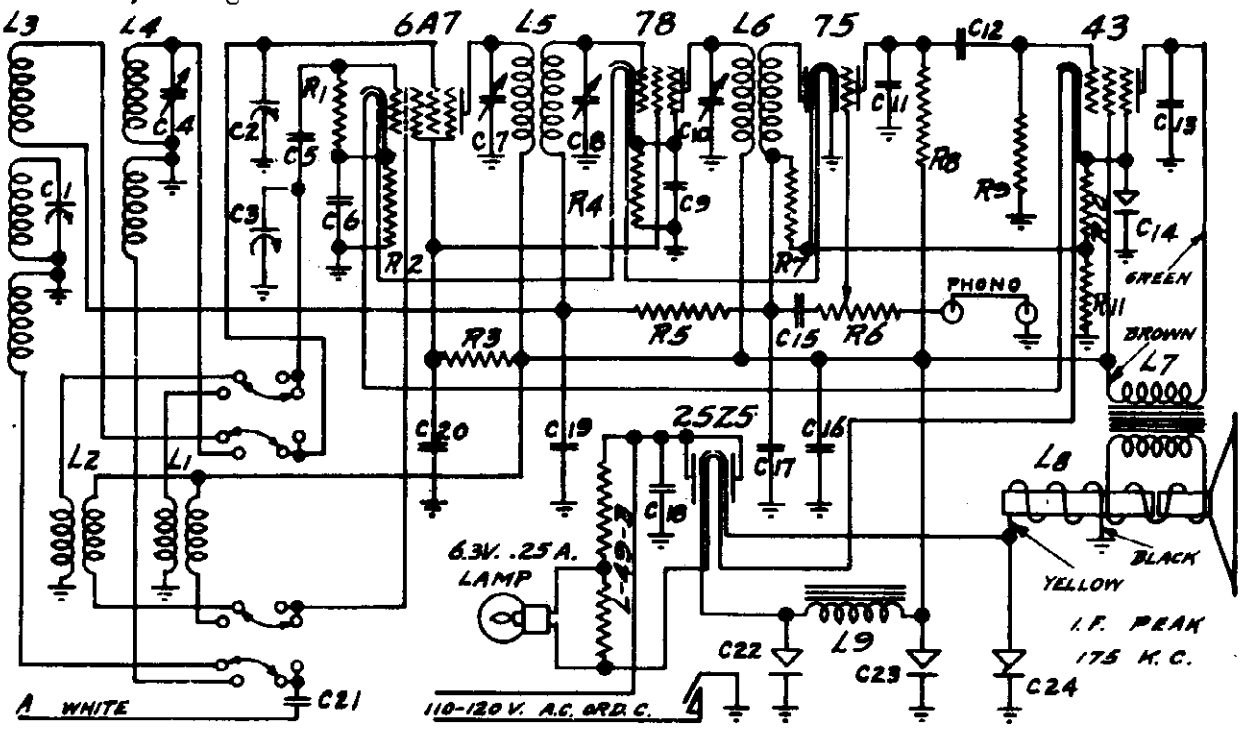

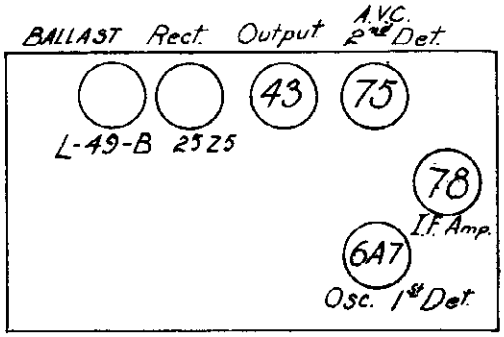

TUBE VOLTAGES

Tube	Pl. to Gnd.	Scr. to Gnd.	K to Gnd.	2 Pl to Gnd.	2 G to Gnd.
6A7	105	50	1.3	105	-4.4
78	105	50	2		
75	45	--	1.2		
43	98	105	15		
25Z5	Line Drop				
L-49B	49				

43 Gr. to Gnd 0
Spkr. Field Voltage 110
B+ Voltage 105

CONDENSERS

C1	77-833	366 MMFD. Preselector Section of 3 Gang	
C2	77-833	366 MMFD. Preselector Section of 3 Gang	
C3	77-833	328 MMFD. Oscillator Section of 3 Gang	
C4	78-2010	3-30 MMFD. Foreign Band Preselector Trimmer Cond.	
C5	76-2002	.00005 Mfd. Mica Oscillator Grid Condenser	
C6	75-2005	.1 Mfd. 200 Volt Paper 6A7 Cathode By-Pass Cond.	
C7	78-2008	First I.F. Primary Trimmer Condenser	
C8	78-2011	First I.F. Secondary Trimmer Condenser	
C9	75-2005	.1 Mfd. 200 Volt Paper 78 Cathode By-Pass Cond.	
C10	78-2009	Second I.F. Trimmer Condenser	
C11	76-285	.001 Mfd. Mica 75 Plate Filter Condenser	
C12	75-2003	.01 Mfd. 400 Volt Paper Audio Feed Condenser	
C13	75-2002	.004 Mfd. 600 Volt Paper 43 Plate Filter Condenser	
C14	18-928	25 Mfd. 25 Volt Dry Electrolytic Condenser	
C15	75-2003	.01 Mfd. 400 Volt Paper Audio Feed Condenser	
C16	75-2011	.5 Mfd. 200 Volt Paper B Supply By-Pass Condenser	
C17	76-307	.0005 Mfd. Mica Diode Filter Condenser	
C18	75-2005	.1 Mfd. 200 Volt Paper Line By-Pass Condenser	
C19	75-2005	.1 Mfd. 200 Volt Paper A.V.C. Network By-Pass Cond.	
C20	75-2005	.1 Mfd. 200 Volt Paper 6A7 & 78 Screen By-Pass Cond.	
C21	75-2003	.01 Mfd. 400 Volt Paper Antenna Series Condenser	
C22	18-2003	11 Mfd. 150 W.V. Dry Electrolytic Condenser	
C23	18-2003	4 Mfd. 150 W.V. Dry Electrolytic Condenser	
C24	18-2003	4 Mfd. 150 W.V. Dry Electrolytic Condenser	

INDUCTANCES

L1	17-2077	Foreign Band Oscillator Coil Assembly
L2	17-2079	Broadcast Oscillator Coil Assembly
L3	17-2080	Broadcast Preselector Coil Assembly
L4	17-2078	Foreign Band Preselector Coil Assembly
L5	68-2012	First I.F. Transformer Assembly
L6	17-2064	Second I.F. Transformer Assembly
L7	64-2006	5" Speaker 43 Output Transformer on L8
L8	64-2006	5" Speaker 3000 Ohm Field
L9	14-940	20 Henry Filter Choke

CODE	PART NO.	RESISTORS
R1	53-898	50,000 Ohm Oscillator Grid Resistor
R2	53-1062	250 Ohm Oscillator Cathode Resistor
R3	53-1042	25,000 Ohm 6A7 & 78 Screen Resistor
R4	53-1063	500 Ohm 78 Cathode Resistor
R5	53-926	1 Meg Ohm AVC Network Resistor
R6	19-1291	500,000 Ohm Volume Control & Switch
R7	53-925	500,000 Ohm Diode Resistor
R8	53-924	250,000 Ohm 75 Plate Resistor
R9	53-925	500,000 Ohm 43 Grid Resistor
R10	53-1062	500 Ohm 43 Cathode Resistor
R11	53-1122	40 Ohm 75 Cathode Resistor

©John F. Rider, Publisher

SEARS-ROEBUCK & CO.

MODELS 1597,1598,7050
Schematic,Voltage
Alignment

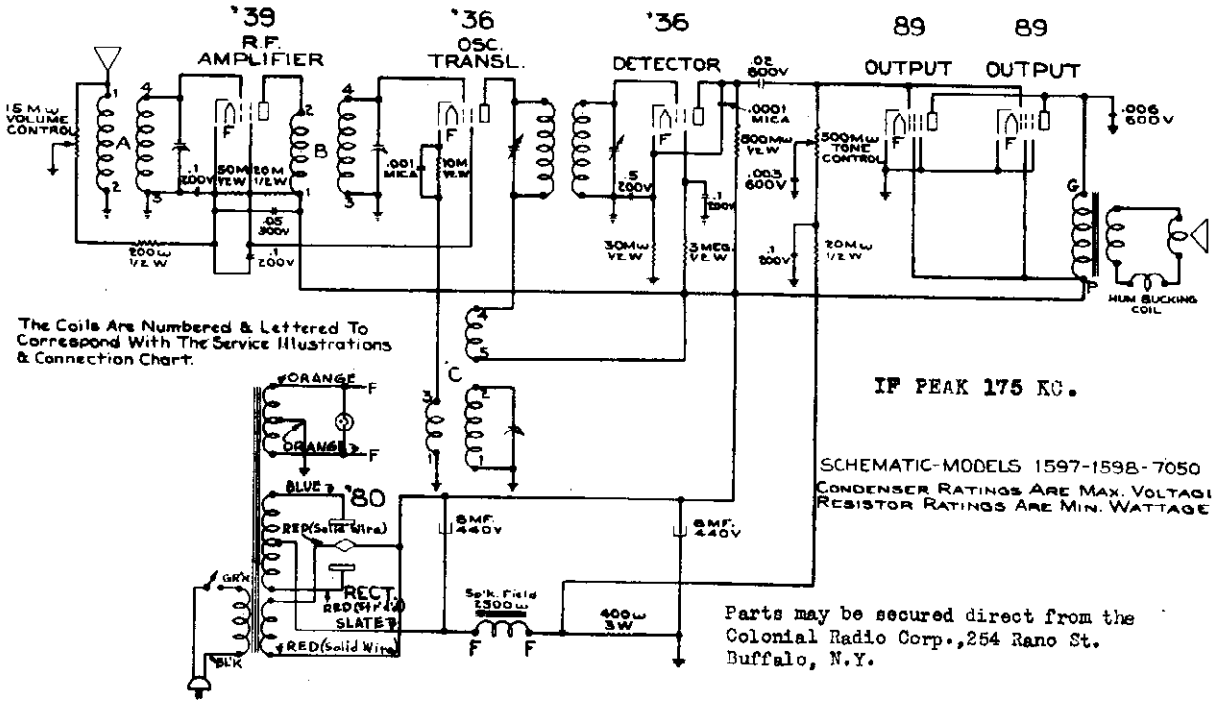

The Coils Are Numbered & Lettered To Correspond With The Service Illustrations & Connection Chart.

IF PEAK 175 KC.

SCHEMATIC-MODELS 1597-1598-7050
CONDENSER RATINGS ARE MAX. VOLTAGE
RESISTOR RATINGS ARE MIN. WATTAGE

Parts may be secured direct from the Colonial Radio Corp.,254 Rano St. Buffalo, N.Y.

TUBE VOLTAGE AND CURRENT CHART

TYPE OF TUBE	Plate Voltage Vol. Cont. at		Screen Voltage Vol. Cont. at		Grid Voltage Vol. Cont. at		Plate M. A. Vol. Cont. at		Screen M. A. Vol. Cont. at	
	Max.	Min.	Max.	Min.	Max.	Min.	Max.	Min.	Max.	Min.
'39 - R. F.	160	140	90	95	-2	-30	6	0	1.6	0
'36 - Osc.-Transl.	160	160	85	115	-5	-6.7	.5	.65	.1	.15
'36 - Detector	75	75	30	30	-5*	-5*	.2	.2	(a)	(a)
89 - Output	150	155	165	170	*	*	15.5	18	3	3
80 - Rectifier	Max. d. c. = 295 v.						Plate current = 22 m.a. per plate			

* - High series resistance, (a) - Too low to read, Watts = 80, Speaker field voltage = 110v.

Control grid readings taken on 150 volt scale of 1000 ohms per voltmeter; others on 750 volt scale. Readings taken with antenna and ground shorted together and no signal received. These are average values. Ordinarily, deviations up to 20% are permissable and do not necessarily indicate a fault. Where series grid resistors prevent grid voltage readings, proper plate current at the rated plate voltage will serve as an indication of proper grid bias and normal functioning of the tube. Care must be used when readings are taken with an analyser since the capacity of the cable may cause the circuit to oscillate and give erratic readings. Usually, touching a finger to the grid or plate will stop oscillation. These readings were taken with the speaker field hot. Readings taken when the field is cold will be higher because of the lowered field resistance.

ALIGNMENT PROCEDURE

If it becomes necessary to align the oscillator-translator and R. F. stages, it should be done at about 1250 kc and then "touched up" at about 1600 kc. Trouble may be experienced if an attempt is made to secure alignment at 1600 kc without having obtained approximate alignment at 1250 kc. At 1600 kc the capacity of the oscillator-translator trimmer may be sufficient to tune the oscillator-translator stage to the same frequency as the R. F. stage, resulting in feedback and violent oscillation.

SERVICE NOTE

The 2500 ohm speaker field is used as the filter choke. It carries the plate and screen current of all the tubes as well as the bleeder current flowing through the screen supply resistors to ground. Should the output transformer, plug, or voice coil be replaced, it is important that it be reconnected with polarity correct as shown in the service illustration. Otherwise the hum due to the field will be in phase with that in the hum bucking coil, intensifying instead of eliminating the speaker hum.

©John F. Rider, Publisher

©John F. Rider, Publisher

Illustration For Coil Replacement And Continuity Checking

Coils Are Mounted On Top Of The Chassis And Lug Connections Are Viewed From The Top.

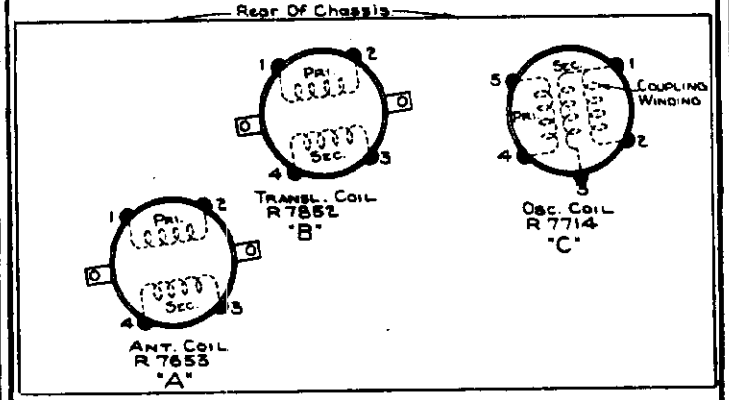

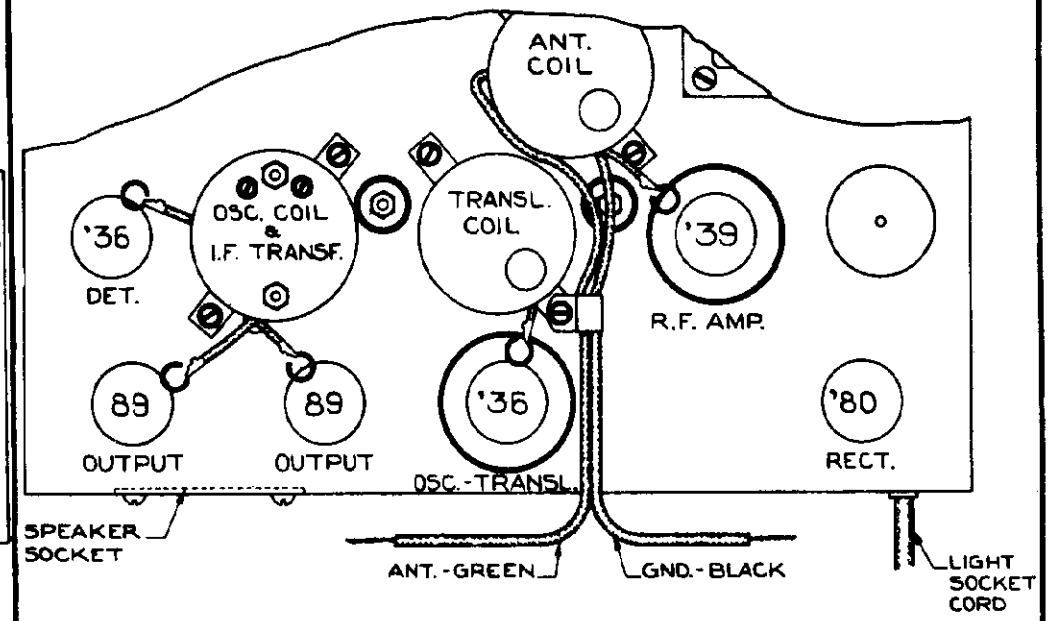

Coil "A"

Lug #1	To Volume Control & Antenna Lead.
Lug #2	To Middle Terminal Of Volume Control. (Gnd.)
Lug #3	To Variable Tuning Condenser Rotors. (Gnd.)
Lug #4	To '39 Grid & Stator #1 Of Variable Tuning Condenser. (Unit Nearest Dial)

Coil "B"

Lug #1	To Screen Of 89 Tubes (B+)
Lug #2	To Plate Prong Of '39 Tube Socket.
Lug #3	To Variable Tuning Condenser Rotors. (Gnd.)
Lug #4	To Grid Of '36 Osc.-Transl. Tube & Stator #2 Of Variable Tuning Condenser.

Coil "C"

Lug #1	To Gnd. & To Gray Lead Of R 7713A I.F. Transformer.
Lug #2	To Stator #3 Of Variable Tuning Condenser.
Lug #3	To .001 Bi-pass Condenser & 10 M Ohm Osc.-Transl. Cathode Resistor
Lug #4	To Red Lead Of R 7713A I.F. Transformer.
Lug #5	To B+

The Coils Are Numbered & Lettered In The Schematic To Correspond With This Chart.

I.F. Transformer R 7713A

Mounted On Top Of R 7714 Oscillator Coil

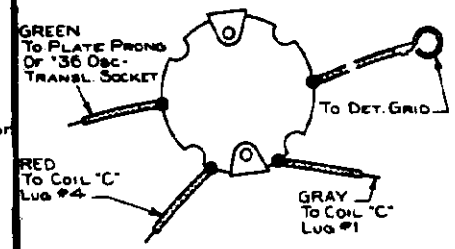

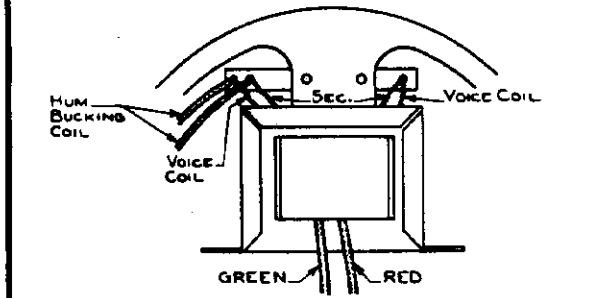

Connections Of S 7805 B Output Transformer Mounted On Rear Of Speaker.

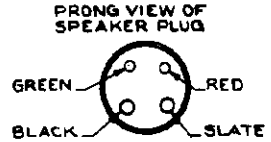

MODELS 44,45,90
MODELS 51,93
Schematics,Voltage
MODEL 96
Note

SEARS ROEBUCK & CO.

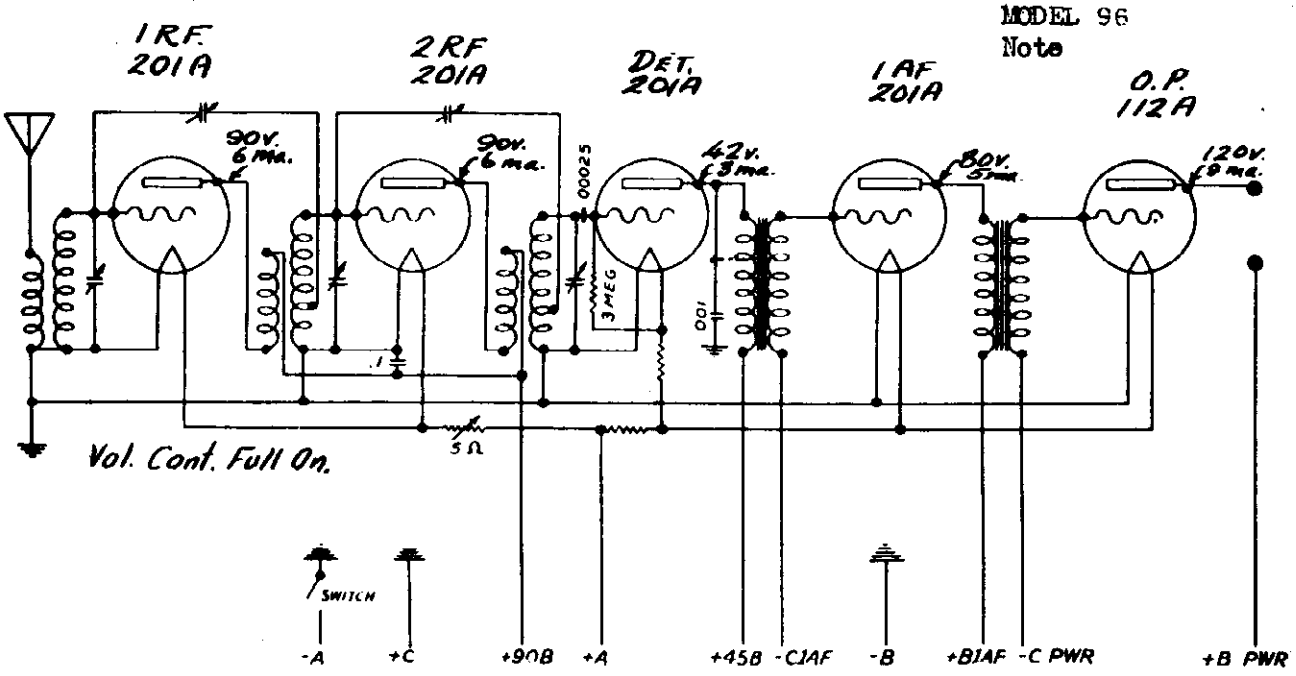

SEARS MODELS 44 & 45 - FACTORY MODEL 90

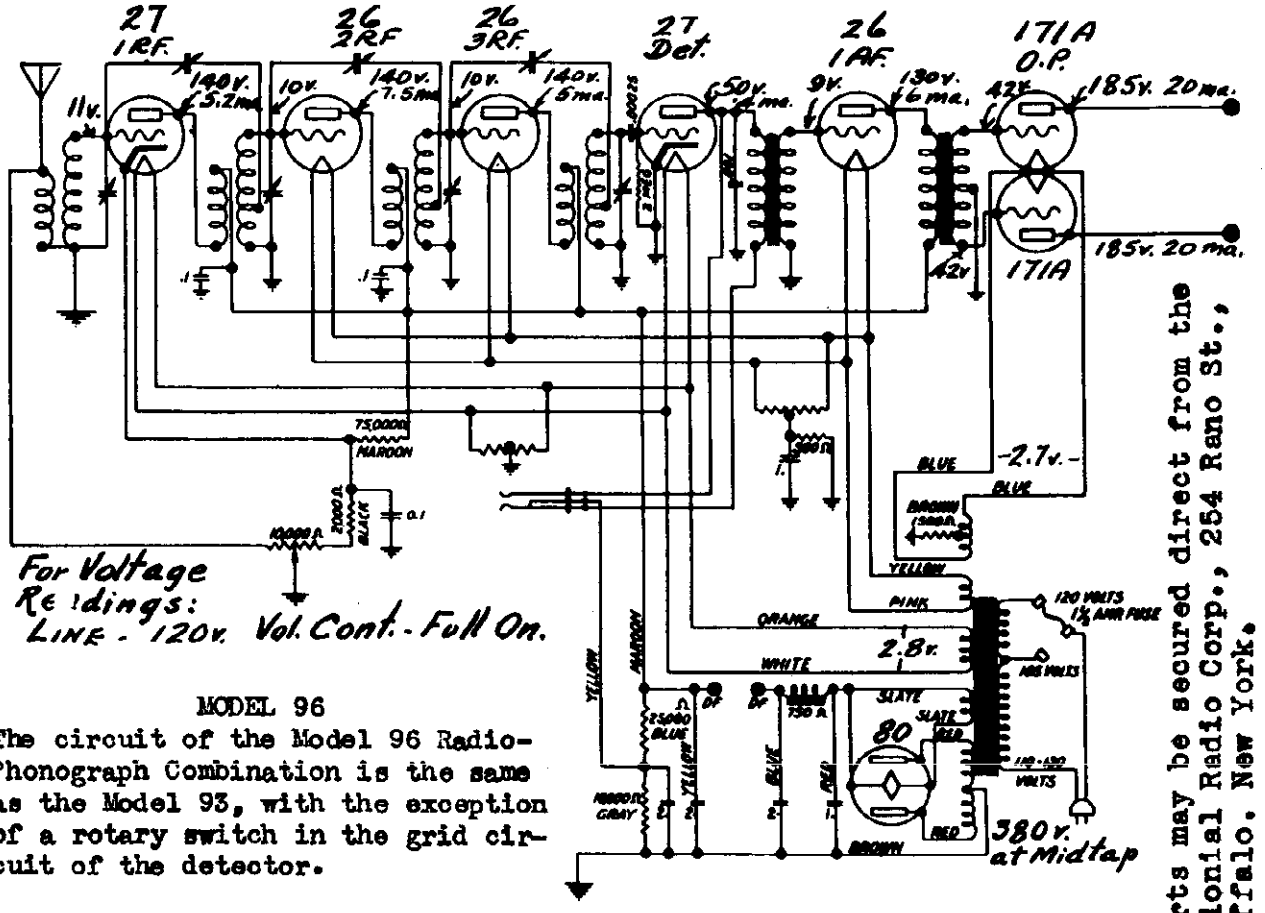

MODEL 96

The circuit of the Model 96 Radio-Phonograph Combination is the same as the Model 93, with the exception of a rotary switch in the grid circuit of the detector.

SCHEMATIC DIAGRAM
SEARS MODEL 51- FACTORY MODEL 93

Parts may be secured direct from the Colonial Radio Corp., 254 Rano St., Buffalo, New York.

©John F. Rider, Publisher

MODELS 1869X, 7157
Schematic, Alignment

SEARS-ROEBUCK & CO.

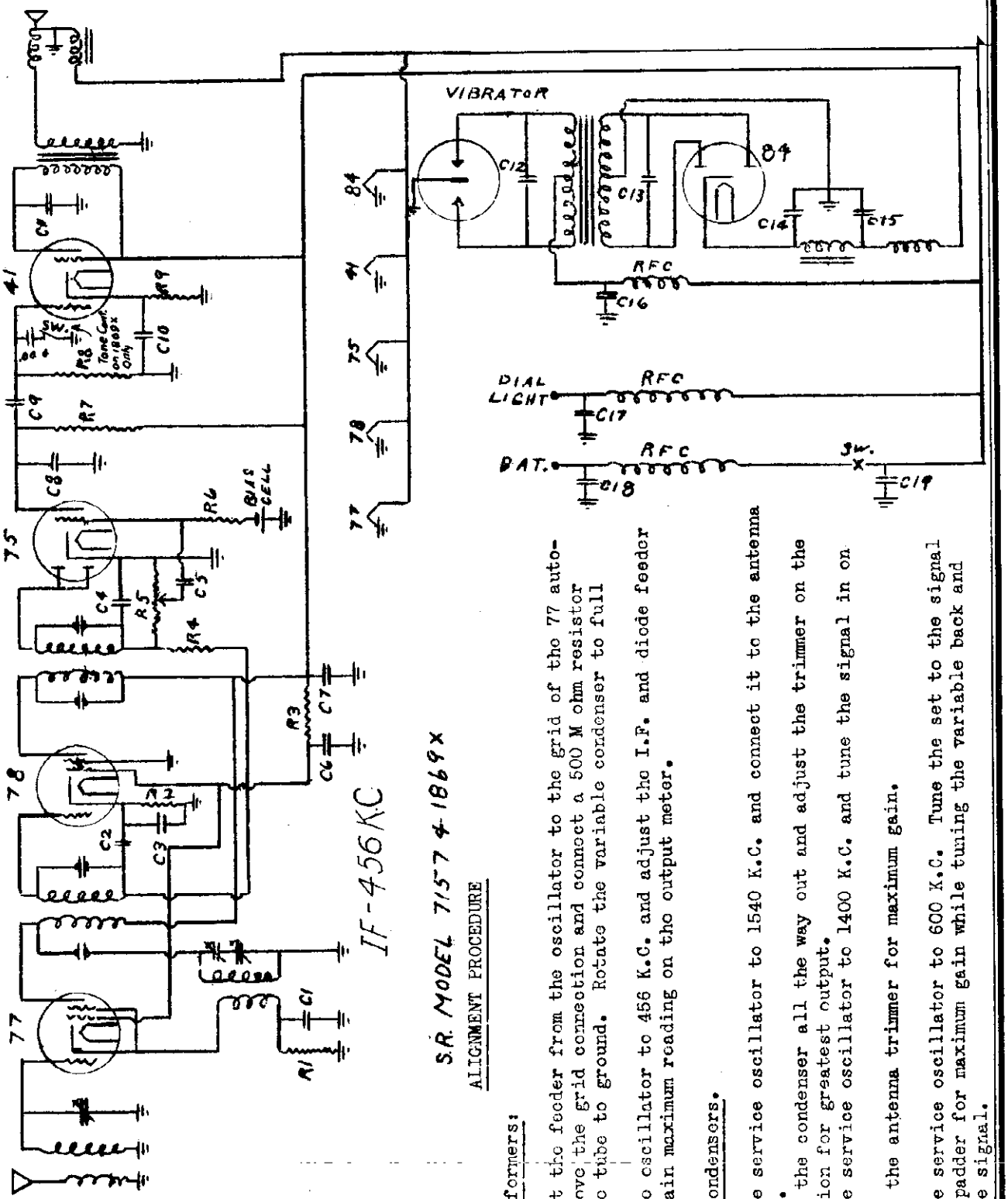

S.R. MODEL 7157 & 1869X

ALIGNMENT PROCEDURE

I.F. Transformers:

1. Connect the feeder from the oscillator to the grid of the 77 autodyne tube. Remove the grid connection and connect a 500 M ohm resistor from grid of the tube to ground. Rotate the variable condenser to full open position.
2. Set the oscillator to 456 K.C. and adjust the I.F. and diode feeder trimmers to obtain maximum reading on the output meter.

Variable Condensers.

1. Set the service oscillator to 1540 K.C. and connect it to the antenna lead of the set.
2. Rotate the condenser all the way out and adjust the trimmer on the oscillator section for greatest output.
3. Set the service oscillator to 1400 K.C. and tune the signal in on one set.
4. Adjust the antenna trimmer for maximum gain.
5. Set the service oscillator to 600 K.C. Tune the set to the signal and adjust the padder for maximum gain while tuning the variable back and forth across the signal.

Parts for this model may be ordered from

Echophone Radio Corporation,

2611 Indiana Avenue, Chicago, Ill.

MODELS 44,45,90
MODELS 51,93
Schematics,Voltage
MODEL 96
Note

SEARS ROEBUCK & CO.

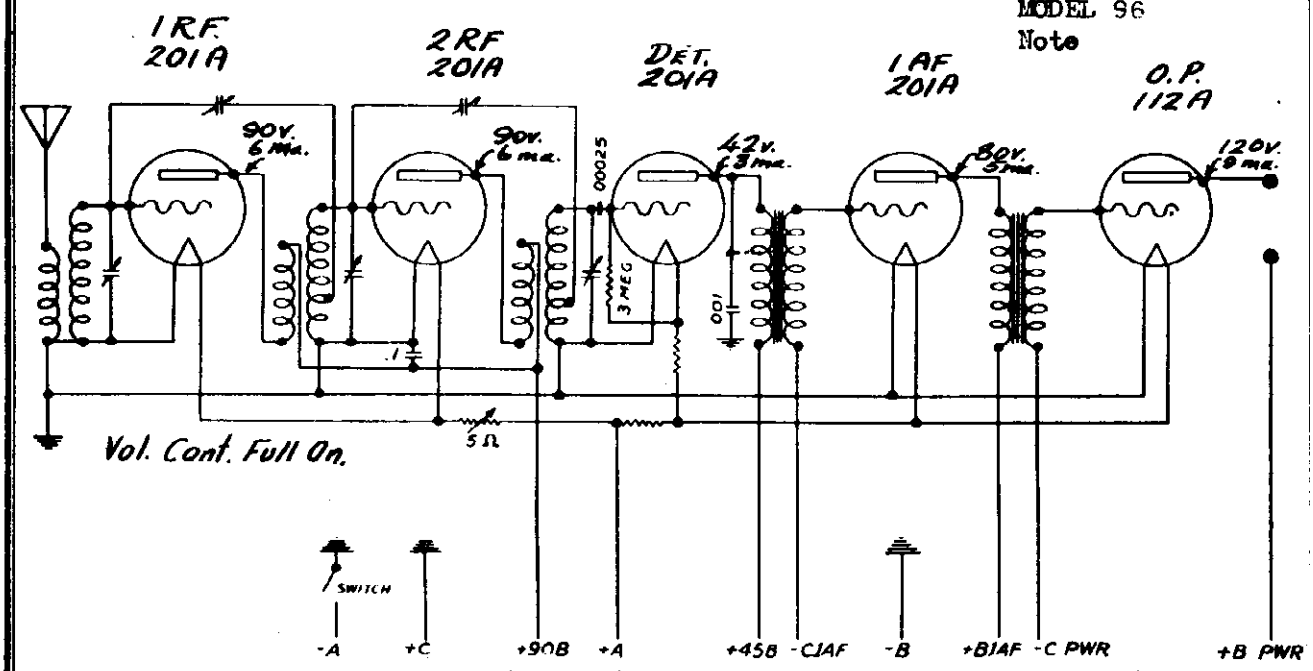

SEARS MODELS 44 & 45 - FACTORY MODEL 90

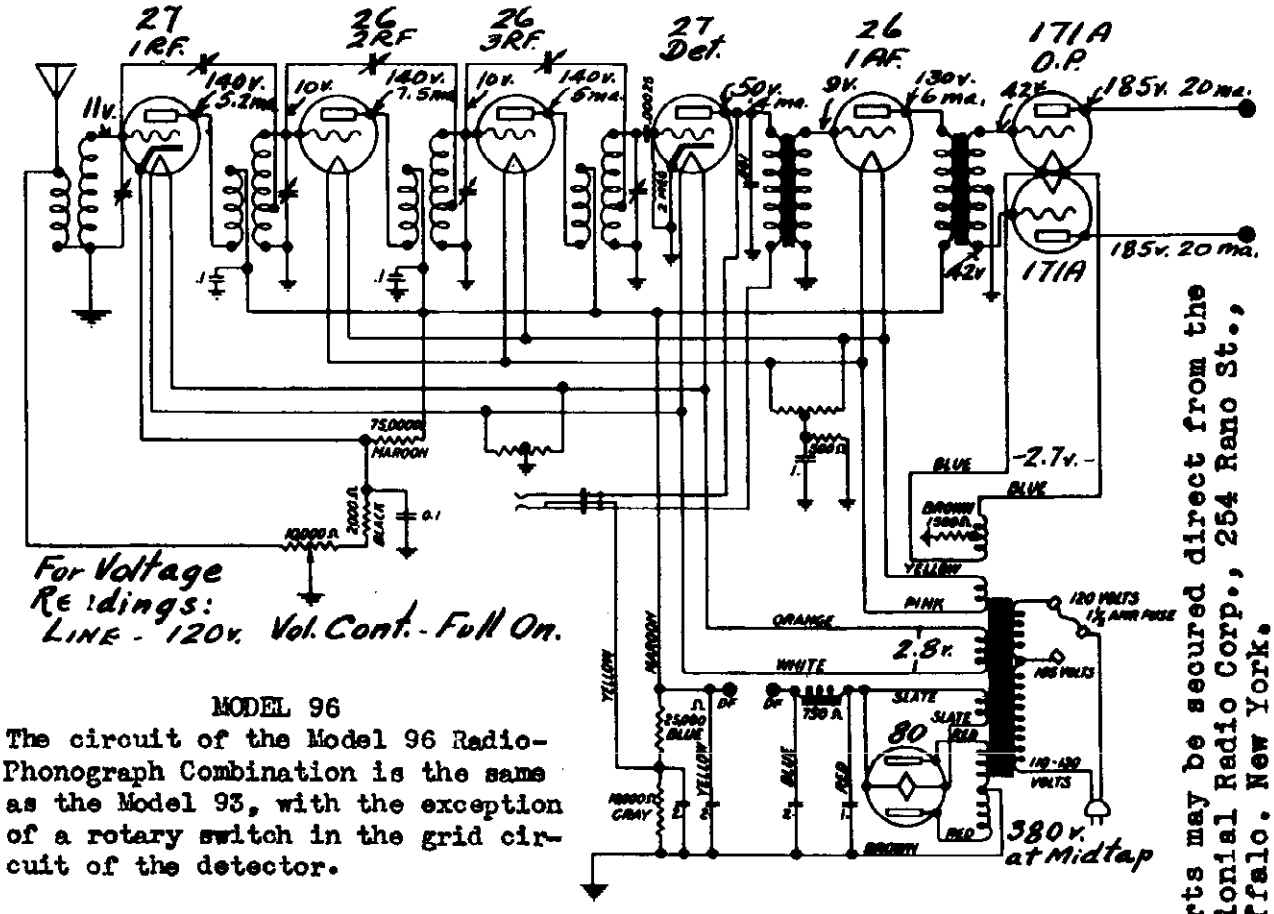

MODEL 96

The circuit of the Model 96 Radio-Phonograph Combination is the same as the Model 93, with the exception of a rotary switch in the grid circuit of the detector.

SCHEMATIC DIAGRAM
SEARS MODEL 51- FACTORY MODEL 93

Parts may be secured direct from the Colonial Radio Corp., 254 Rano St., Buffalo, New York.

©John F. Rider, Publisher

MODELS 1869X, 7157
Schematic, Alignment

SEARS-ROEBUCK & CO.

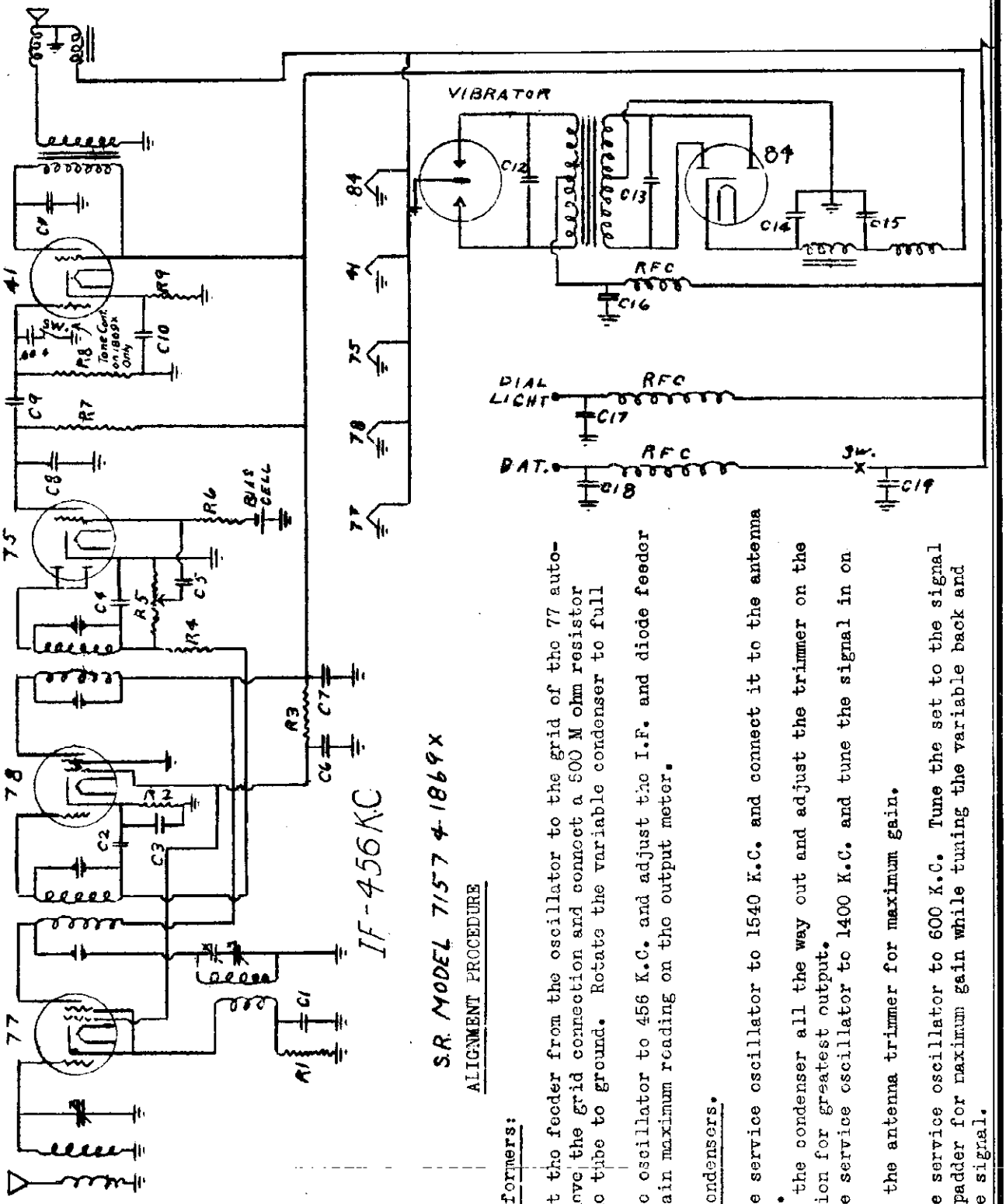

ALIGNMENT PROCEDURE

I.F. Transformers:

1. Connect the feeder from the oscillator to the grid of the 77 autodyne tube. Remove the grid connection and connect a 600 M ohm resistor from grid of the tube to ground. Rotate the variable condenser to full open position.
2. Set the oscillator to 456 K.C. and adjust the I.F. and diode feeder trimmers to obtain maximum reading on the output meter.

Variable Condensers.

1. Set the service oscillator to 1540 K.C. and connect it to the antenna lead of the set.
2. Rotate the condenser all the way out and adjust the trimmer on the oscillator section for greatest output.
3. Set the service oscillator to 1400 K.C. and tune the signal in on the set.
4. Adjust the antenna trimmer for maximum gain.
5. Set the service oscillator to 600 K.C. Tune the set to the signal and adjust the padder for maximum gain while tuning the variable back and forth across the signal.

Parts for this model may be ordered from

Echophone Radio Corporation,

2611 Indiana Avenue, Chicago, Ill.

© John F. Rider, Publisher

MODEL 1835
Schematic
Voltage

SEARS-ROEBUCK & CO.

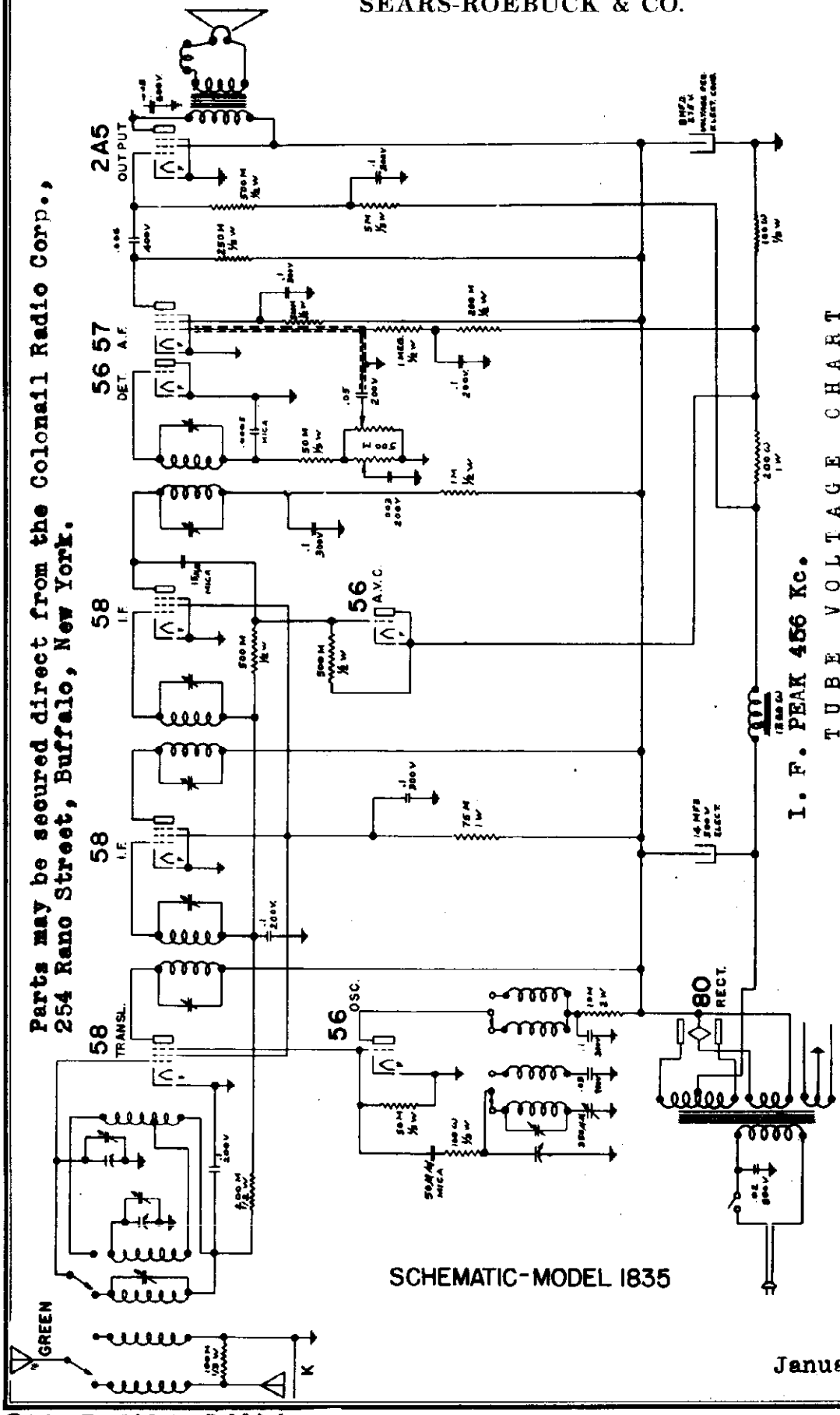

SCHEMATIC-MODEL 1835

Parts may be secured direct from the Colonail Radio Corp.,
254 Reno Street, Buffalo, New York.

TUBE VOLTAGE CHART

All readings are to be taken between chassis and respective tube element.

TUBE	PLATE	SCREEN	TUBE	PLATE	SCREEN
58-Translator	260	95	56-AVC, Used as diode with-out applied DC.		
56-Oscillator	140		56-Detector,	"	"
58-First IF	260	95	57-Audio	85	80
58-Second IF	255	95	2A5-Output	250	260

January 4, 1935

©John F. Rider, Publisher

ALIGNMENT PROCEDURE

The IF Stages:

1. Connect the low scale of the output meter across the loud speaker voice coil.

2. Connect the ground lead of the test oscillator to the receiver chassis.

3. Connect the other lead of the test oscillator, through a .1 mfd. condenser, to the control grid of the 58 second IF tube. The grid clip should be left attached to the cap.

4. Set the test oscillator to 445 kc and tune the IF output transformer. The locations of its tuning adjustments are shown in the Service Illustration.

5. Change the test oscillator connection to the control grid cap of the 58 first IF tube and tune the IF interstage transformer.

6. Change the test oscillator connection to the control grid cap of the 58 translator tube and tune the IF input transformer.

In all of these adjustments the tone control should be in the brilliant position, the volume control on full, and the test oscillator adjusted to give the lowest possible output consistent with a readable deflection of the output meter. After all three IF transformers have been peaked, it is advisable to repeat the operations, starting with the IF output transformer, to secure greater accuracy.

RF Alignment; Broadcast:

1. Set the test oscillator to 1750 kc.

2. Loosely couple the output of the test oscillator to the antenna lead of the set, with the antenna connected. Leave the output meter connected to the loud speaker voice coil as for IF alignment. The tone control and volume control also should be left full "on" as for RF alignment.

3. Turn the variable condenser plates all the way. Then adjust the oscillator trimmer for maximum output. The locations of the trimmers are indicated in the Service Illustrations.

4. Set the test oscillator to 1400 kc and adjust the trimmers on the antenna and translator sections of the variable condenser.

5. Set the test oscillator to 600 kc and tune in its signal. Then slowly rotate the variable condenser back and forth a degree or two and, at the same time, adjust the broadcast oscillator padder for maximum output.

6. Repeat the 1750 kc and 1400 kc adjustments to secure greater accuracy. Always use the lowest possible output from the test oscillator.

RF Alignment; Short Wave:

1. Set the test oscillator to 15 megacycles, leaving it coupled to the set's antenna lead as for broadcast alignment.

2. Turn the wave band switch to the short wave position and tune in the test oscillator signal. Then adjust the trimmer on the short wave translator coil for maximum output.

The lead from the wave switch to the center condenser section should be kept as far away as possible from the short wave oscillator coil.

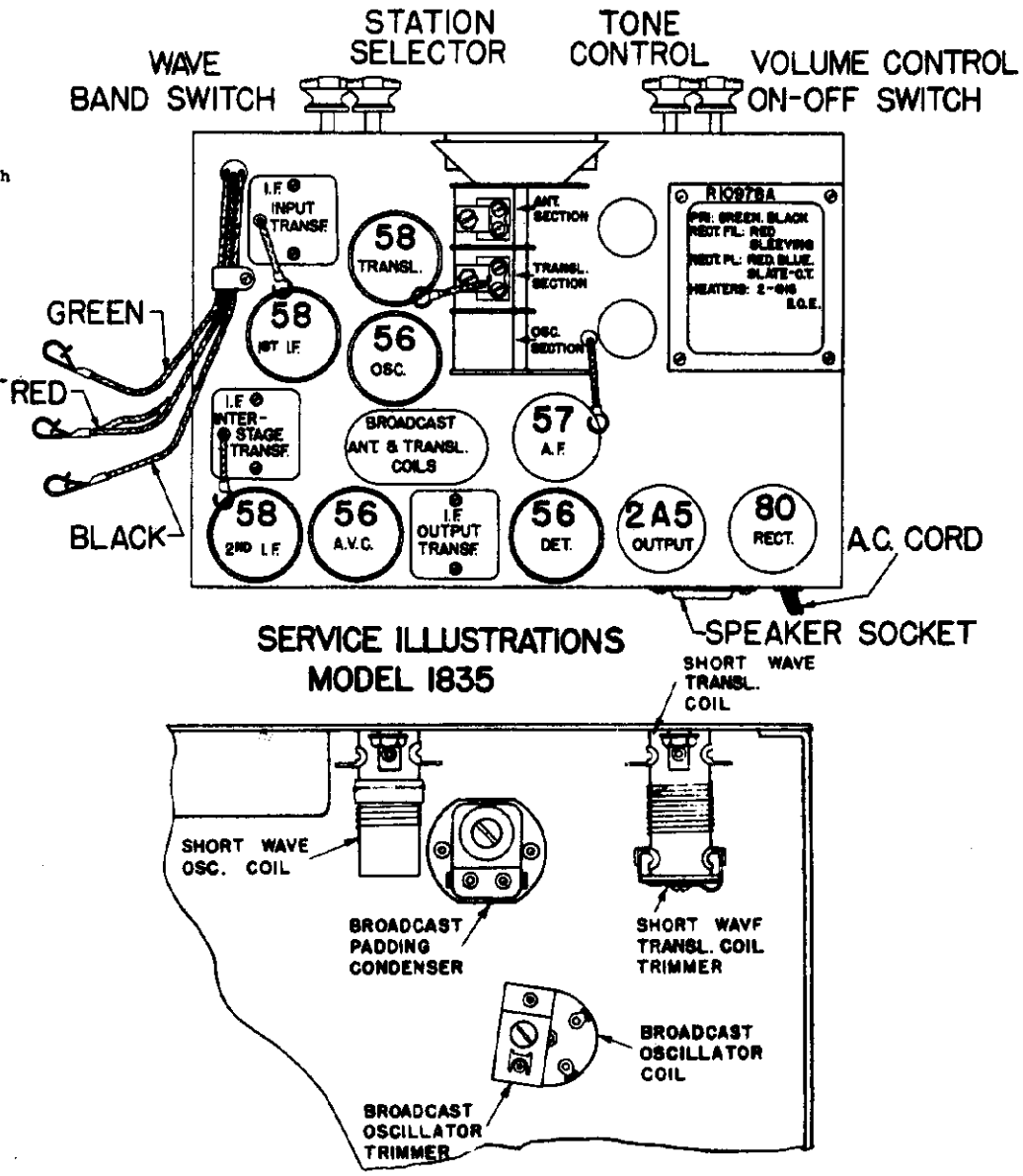

©John F. Rider, Publisher

MODEL 1854A
Schematic
Voltage

SEARS-ROEBUCK & CO.

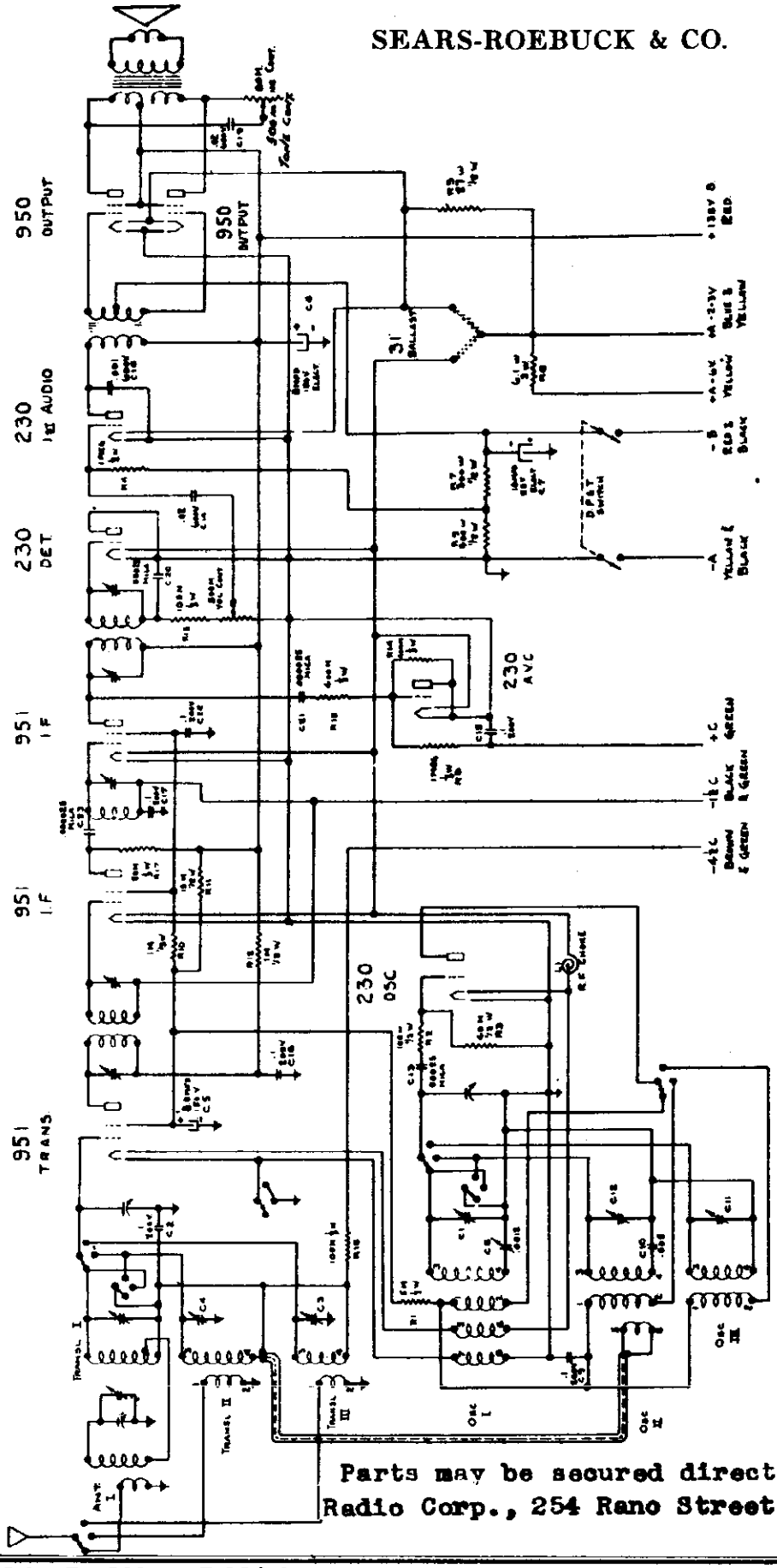

SCHEMATIC-MODEL 1854A

IF PEAK 175 Kc.

November 30, 1934.

TUBE VOLTAGE CHART

All readings are to be taken between the chassis and the respective element of each tube.

TUBE	PLATE	SCREEN	TUBE	PLATE	SCREEN
951- Translator	118	65	230- AVC, Used as diode	with no applied D.C.	
230- Oscillator	50		230- Detector,	"	
951- 1st. I.F.	80	60	230- Audio	120	
951- 2nd. I.F.	120	60	950- Output	120	120

Parts may be secured direct from the Colonial Radio Corp., 254 Rano Street, Buffalo, New York

©John F. Rider, Publisher

©John F. Rider, Publisher

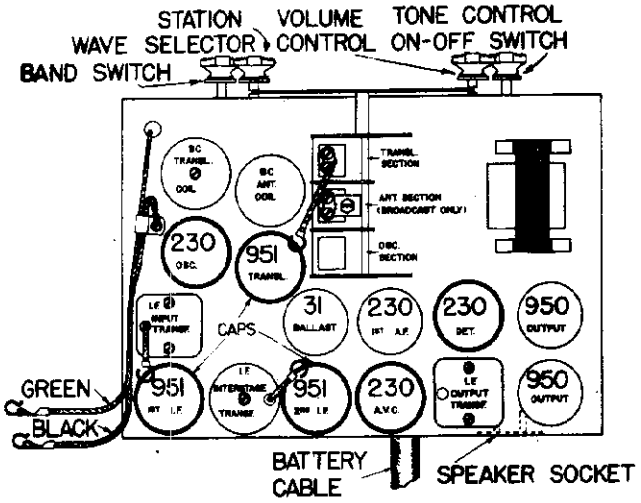

SERVICE ILLUSTRATION
MODEL 1854A

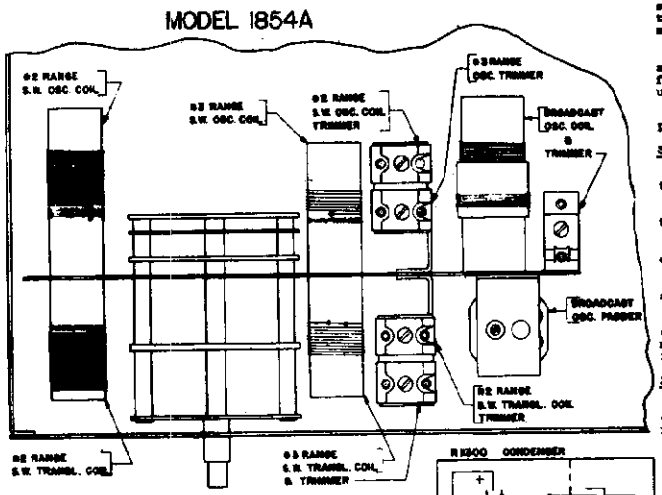

SERVICE ILLUSTRATION
MODEL 1854A

R10445A	Shaft - Dial drive	R10514	Bezel
R8535	Shield - Tube, base	R8897A	Board - Terminal, double
R10440	Shield - Tube, top	R8530A	Board - Terminal, triple
R10441	Shield - Tube, cap	R9446A	Board - Terminal, 4 terminals
R10854	Shield - Coil, base	R8900A	Board - Terminal, 6 terminals
R10865	Shield - Coil, top	R11291	Cable - Battery
R8515	Socket - 4 prong	R11192	Card - Operating
R8366	Socket - 4 prong, speaker		
R8853	Socket - 5 prong		
R10481	Spacer - Wood, shipping		

ALIGNMENT PROCEDURE

The IF Stages:

1. Connect the low scale of the output meter across the loud speaker terminals.

2. Connect the ground lead of the test oscillator to the chassis.

3. Connect the other lead of the test oscillator, in series of .1 mfd. condenser, to the grid of the second IF tube. Leave the grid clip attached to the cap.

4. Set the test oscillator to 175 kc and tune the IF output transformer. The locations of the tuning adjustments are shown in the Service Illustrations.

5. Change the test oscillator connection to the grid of the first IF tube and peak the IF interstage circuit. This circuit contains a single tuning adjustment.

6. Change the test oscillator connection to the grid of the translator tube and tune the IF input transformer.

7. Repeat all of the adjustments to secure greater accuracy. Start with the IF output transformer.

Always use as low an output as possible from the test oscillator in order to render the AVC action of the receiver inoperative.

Broadcast Alignment: #1 Range:

1. Set the test oscillator to exactly 1700 kc.

2. Loosely couple the output of the test oscillator to the antenna lead of the receiver, with the antenna connected.

3. Turn the variable condenser plates all the way out and adjust the broadcast oscillator trimmer for maximum output. The location of this trimmer is shown in the Service Illustration.

4. Set the test oscillator to 1400 kc and tune in its signal. Adjust the broadcast translator coil trimmer and the trimmer on the antenna section of the variable condenser for maximum output.

5. Set the test oscillator to 600 kc and tune in its signal. Then slowly rotate the variable condenser back and forth a degree or two and, at the same time, adjust the padder until maximum output is obtained.

6. Repeat all of the adjustments, always using the lowest possible output from the test oscillator.

Short Wave Alignment: #2 Range:

1. Set the test oscillator to 5250 kc, leaving it coupled to the set's antenna lead, as for broadcast alignment.

2. Open the variable condenser plates all the way and turn the wave switch to the #2 range position.

3. Adjust the #2 range oscillator coil trimmer for maximum output.

4. Set the test oscillator to 4500 kc and tune in its signal. Then adjust the #2 range translator coil trimmer.

5. Set the test oscillator to 1750 kc and tune in its signal. If necessary, turns on the #2 range translator coil may be shifted to secure maximum output. If turns are shifted it will be necessary to repeat the 4500 kc trimmer adjustment.

Short Wave Alignment: #3 Range:

1. Set the test oscillator to 15,800 kc, leaving it coupled to the set's antenna lead as for the lower frequency ranges.

2. Open the variable condenser plates all the way and turn the wave switch to the #3 range position.

3. Adjust the #3 range oscillator coil trimmer for maximum output.

4. Set the test oscillator to 14,000 kc and adjust the #3 range translator coil trimmer.

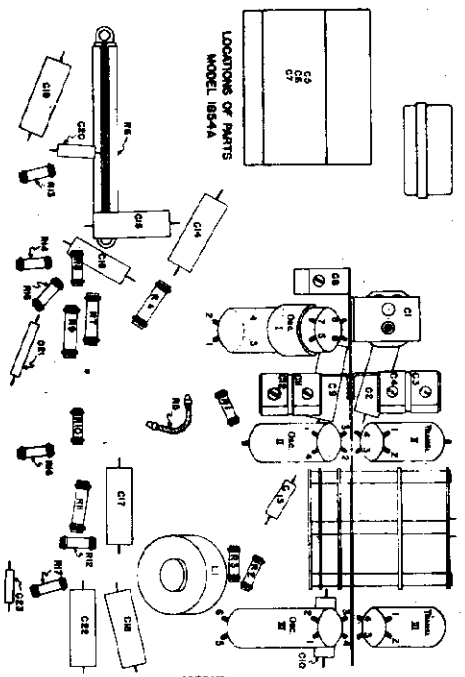

PART NO.	DESCRIPTION
R8359	Choke - RF, filament circuit
R8961	Clamp - Battery cable
R7011A	Clip - Antenna and ground leads
R11043	Clip - Grid
R8446	Coil - Antenna, broadcast
R8447	Coil - Translator, broadcast
R11195	Coil - Oscillator, broadcast
R11235A	Coil - Antenna, short wave, #2 range
R11234A	Coil - Oscillator, short wave, #2 range
R11235B	Coil - Antenna, short wave, #3 range
R11235C	Coil - Oscillator, short wave, #3 range
R11150	Condenser - Variable
R11150A	Condenser - Variable with drive assembly
R11300	Condenser - Electrolytic, 8-8-10 mfd.
R9425	Condenser - Padding
R10197	Condenser - Trimmer, single
R10756	Condenser - Trimmer, double
R9513	Condenser - Trimmer
R8444	Condenser - .1 mfd. 200 volts
R8751	Condenser - .02 mfd. 600 volts
R8954	Condenser - .008 mfd. 600 volts
R8952	Condenser - .001 mfd. 600 volts
R4492	Condenser - .00025 mfd. mica
R8711	Condenser - .0000025 mfd. mica
R8436	Resistor - 400 ohms, 1/2 watt carbon
R8447	Resistor - 300 ohms, 1/2 watt carbon
R8922	Resistor - 100 ohms, 1/3 watt carbon
R11180	Resistor - Candohm
R10859	Resistor - 27 ohms, 1/2 watt flexible
R5823	Resistor - 1 megohm, 1/2 watt carbon
R7585	Resistor - 1 megohm, 1/3 watt carbon
R8710	Resistor - 400 M ohms, 1/3 watt carbon
R7586	Resistor - 100 M ohms, 1/3 watt carbon
R8115	Resistor - 40 M ohms, 1/3 watt carbon
R8840	Resistor - 20 M ohms, 1/3 watt carbon
R7291	Resistor - 15 M ohms, 1/2 watt carbon
R7285	Resistor - 5 M ohms, 1/3 watt carbon
R8536	Resistor - 1 M ohms, 1/3 watt carbon
R10717B	Transformer - IF input
R10584B	Transformer - IF interstage
R10599A	Transformer - IF output
R11503A	Transformer - Audio, interstage

Use orders for parts direct with Colonial Radio Corp., 264 Rano St., Buffalo, N. Y., on form #78884

R11174	Control - Tone, with switch	R10484	Tube - Rubber, chassis mounting
R11161	Control - Volume	R10486	Washer - Rubber, chassis mounting
S11295A	Speaker - 10" PM, dynamic		
R11182A	Switch - Wave		

Schematics
Socket, Trimmers
Alignment

SEARS-ROEBUCK & CO.

MODEL 1863
MODEL 7153

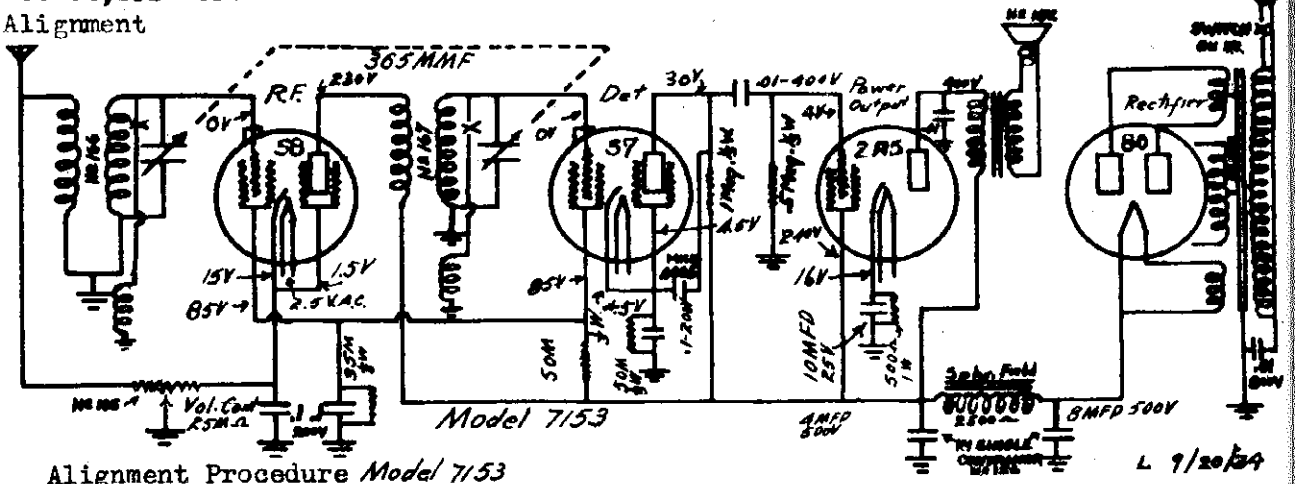

Alignment Procedure *Model 7153*

1. Turn volume control all the way up, then back down until oscillation stops.
2. Turn variable condenser all the way open (Minimum capacity)
3. Apply a 1720 K C oscillator note into antenna.
4. Adjust variable condenser trimmers to maximum output - it will not be necessary to bend plates or balance short wave.

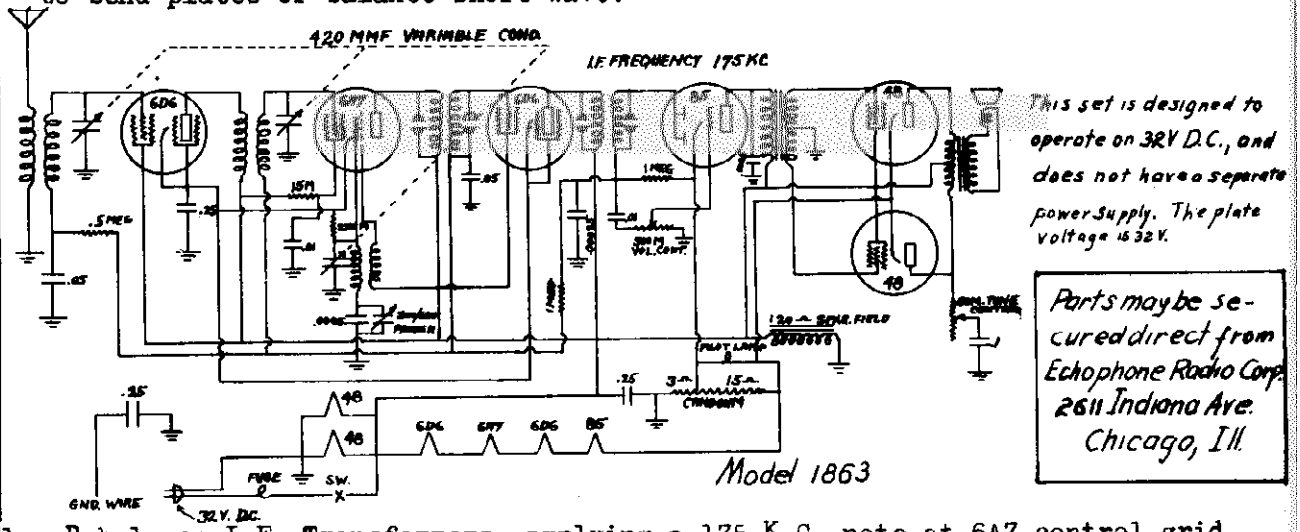

1 - Rebalance I.F. Transformers, applying a 175 K.C. note at 6A7 control grid.
2 - Open variable condenser all the way (minimum capacity) apply a 1720 K C note an oscillator at the antenna of receiver.
3 - Check oscillator section of variable to 1720 K C, then adjust Interstage and antenna to maximum peak.
4 - Adjust low frequency padder by applying a 600 K C oscillator note into antenna and while rocking variable condenser across signal adjust padder until maximum output is obtained.

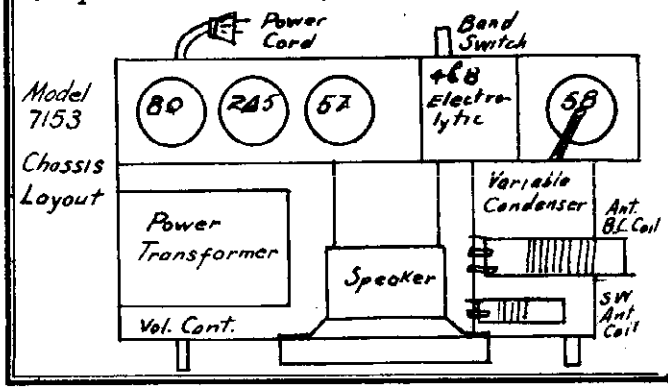

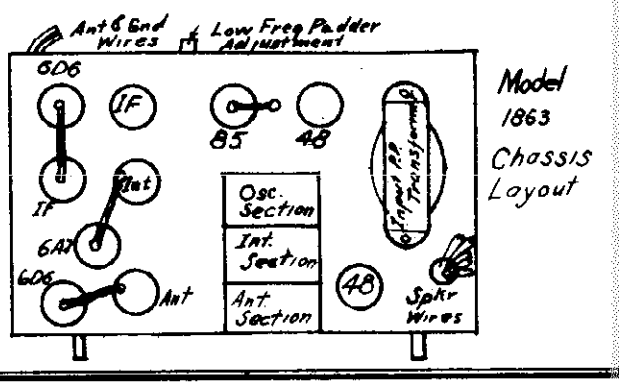

©John F. Rider, Publisher

MODEL 1863
Generator Data
Parts

SEARS-ROEBUCK & CO.

AVERAGE INSTALLATIONS ON 32 VOLT D C SYSTEMS.

CAUTION; Disconnect the batteries from the generator before installing suppressor equipment.

Connect one of the .5 mfd 200 V condensers between the positive brush and the generator frame, and the other .5 mfd condenser between one negative brush and the generator frame, as shown in Fig. 1. For four cylinder plants attach condensers as shown in Fig. 2.

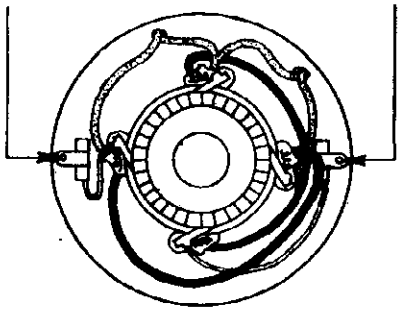

Fig.1

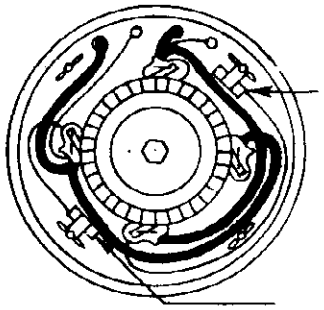

Fig.2

Connect the spark plug suppressor between the top of the spark plug and the high tension lead coming from the coil. When four cylinder plants are used to operate generator, three more .5 mfd, Part No. 617 may be obtained and attach one to each spark plug.

In extreme cases it may be necessary to shield the high tension lead coming from the coil to the spark plug. This should be done by using 3/8 copper shielded loom and ground each end of the shielding to the generator frame.

Some cases may require a good grounding of the system. This may be best accomplished by using No. 12 gauge solid copper wire and running it from the frame of the generator to a very good ground making the lead as short as possible.

Do not attempt to ground one side of the line unless it is absolutely necessary and great care must be taken that the opposite side of the line is not grounded in some unknown place.

Part No.	Description	List Price	Part No.	Description	List Price.
73	3 lug terminal strip	.03	609	Tone control 50M	.68
158	Power cord & plug	.30	610	6" Speaker	5.48
601	Output 1 F transformer	1.25	611	Airplane Dial	3.22
602	Input I F transformer	1.25	612	Flat type Dial	1.07
603	Interstage coil shielded	.93	613	Fuse Clip Block	.15
604	Antenna coil shielded	.93	614	Cand.ohm 3 ohms-15 ohms	
605	Oscillator Coil	.68	615	.25-200V Tubular Cond.	.18
606	Input push pull Trans.	1.93	616	Spark Plug suppressors	.29
607	3 gang variable condenser	2.25	617	.5 mfd. Generator condenser	.32
608	Volume control 500 M W/S	.80	108	300/600 MMF Padder Cond.	.18
				Any tube Socket State marking	.08
				Any Carbon Resistor State value	.09
				Any By Pass condenser not listed above	.13

©John F. Rider, Publisher

MODELS 1903,1953
Early,Late
Schematic,Socket
Trimmers,Alignment

SEARS-ROEBUCK & CO.

FIVE TUBE AC-DC

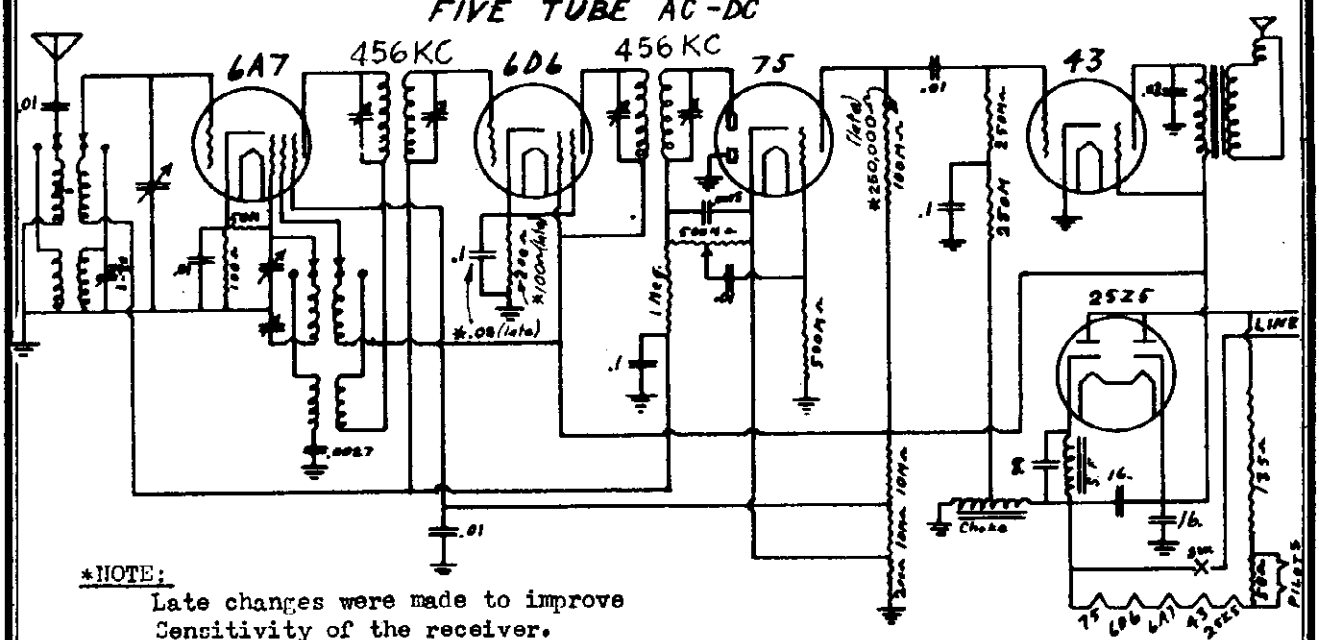

*NOTE:
Late changes were made to improve
Sensitivity of the receiver.

ALIGNMENT

If for any reason the set should be re-aligned,ie, if changes are made; proceed as follows.

1-Apply a 456KC note to the control grid of 6A7 tube and peak I.F. Transformers.

2-Rotate variable condensers all the way out, apply a 1720KC note to the antenna wire, and balance with the trimmers on top of variable condenser for maximum gain.

3-Apply a 600KC note to antenna wire and adjust padder for maximum signal while swinging the variable condenser back and forth across the 600KC note.

4-Turn back to 1400KC and check for alignment. Do not bend plates of variable condenser.

5-To align the short wave band, adjust trimmer underneath chassis for greatest noise level around the 25 meter band

Parts may be secured direct from Echophone Radio Corp 2611 Indiana Avenue, Chicago, Illinois.

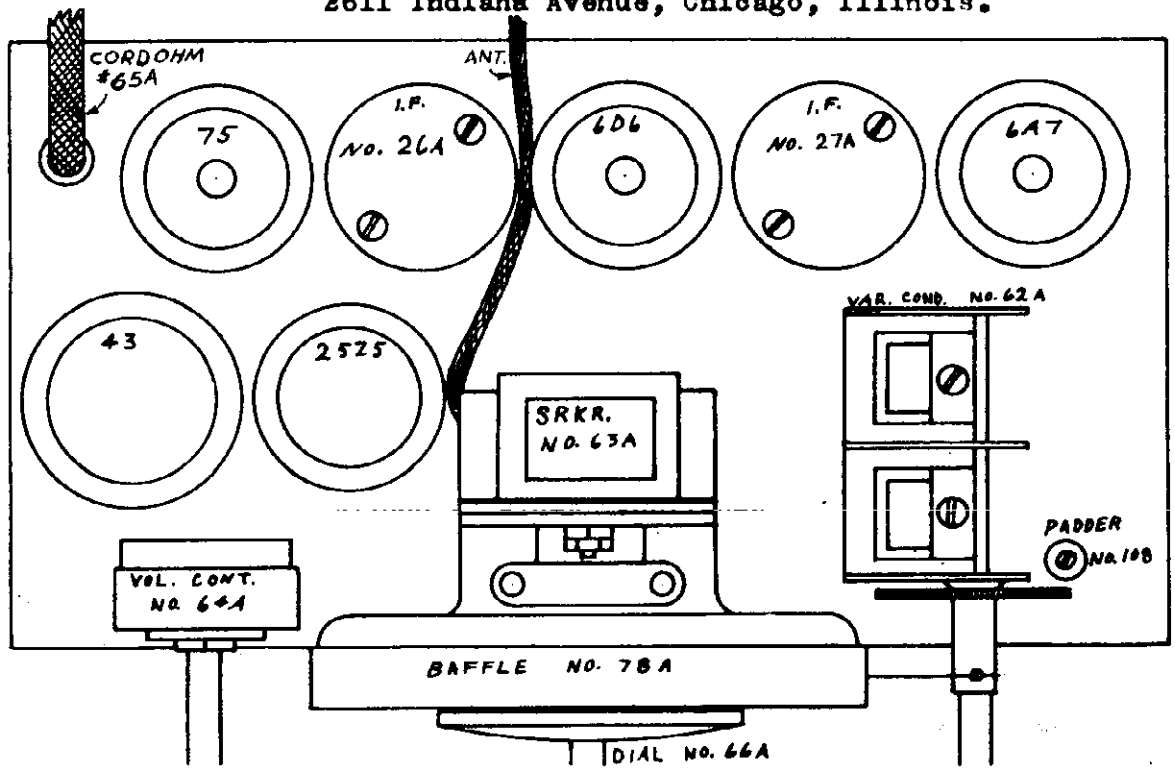

© John F. Rider, Publisher

MODELS 1905,1915,1955,1965
MODELS 1917,1967,1967A
MODELS 1918,1968
MODELS 1918A,1968A
MODELS 1936,1996

SEARS-ROEBUCK & CO.

MODEL 1945
MODEL 1946
Dual Ratio
Drive Data

THE DUAL RATIO CONDENSER DRIVE SHAFT

There are two positions in which the Station Selector knob can be put before turning it. When the knob is pushed in the condenser drive ratio is approximately 17 to 1. When the knob is pulled out, the dial ratio becomes approximately 70 to 1, making possible very precise tuning.

The mechanism proper is of the planetary drive type, using ball bearings in contact with a cone shaped retainer. Do not attempt to take the mechanism apart. Should any difficulty with slippage occur, it can be corrected as described in the following paragraph. Slippage that occurs when the condenser reaches its limit of rotation in either direction is normal. However, if there is slippage at any other part of the condenser travel, proceed as follows:

Determine whether or not the Shaft End (11) is turning. See the illustration. If the shaft end turns but the gears (8 & 9) do not turn, remove the U shaped tension washer (10) and bend it to increase its curvature and tension. Then replace it. Note that the convex side of the washer should face the shaft end and the concave side should face the gears. If the shaft end does not turn, the slippage is occurring in the planetary drive mechanism. This will occur only when the knob is in its "out" or slow position. In this case, squeeze the tabs (6) slightly with a pair of pliers to increase the pressure. Do not squeeze them too much or the drive will become stiff and hard to turn.

When placing the knob on its shaft be careful not to use force in pressing it on or the splines (3 & 4) will become burred. The floating sleeve (2) must be centered on the shaft in order to permit the knob to slip over it. If the knob does not go on easily, do not force it, but try it several times until the sleeve gets into such position that it allows the knob to slip on. Care must be taken when tightening the set screw, that it is not tightened down on the splines but comes in the space between the two splines. This is best done by removing the set screw, positioning the knob so that the set screw hole comes over the sleeve, between the splines. Then insert and tighten the set screw.

©John F. Rider, Publisher

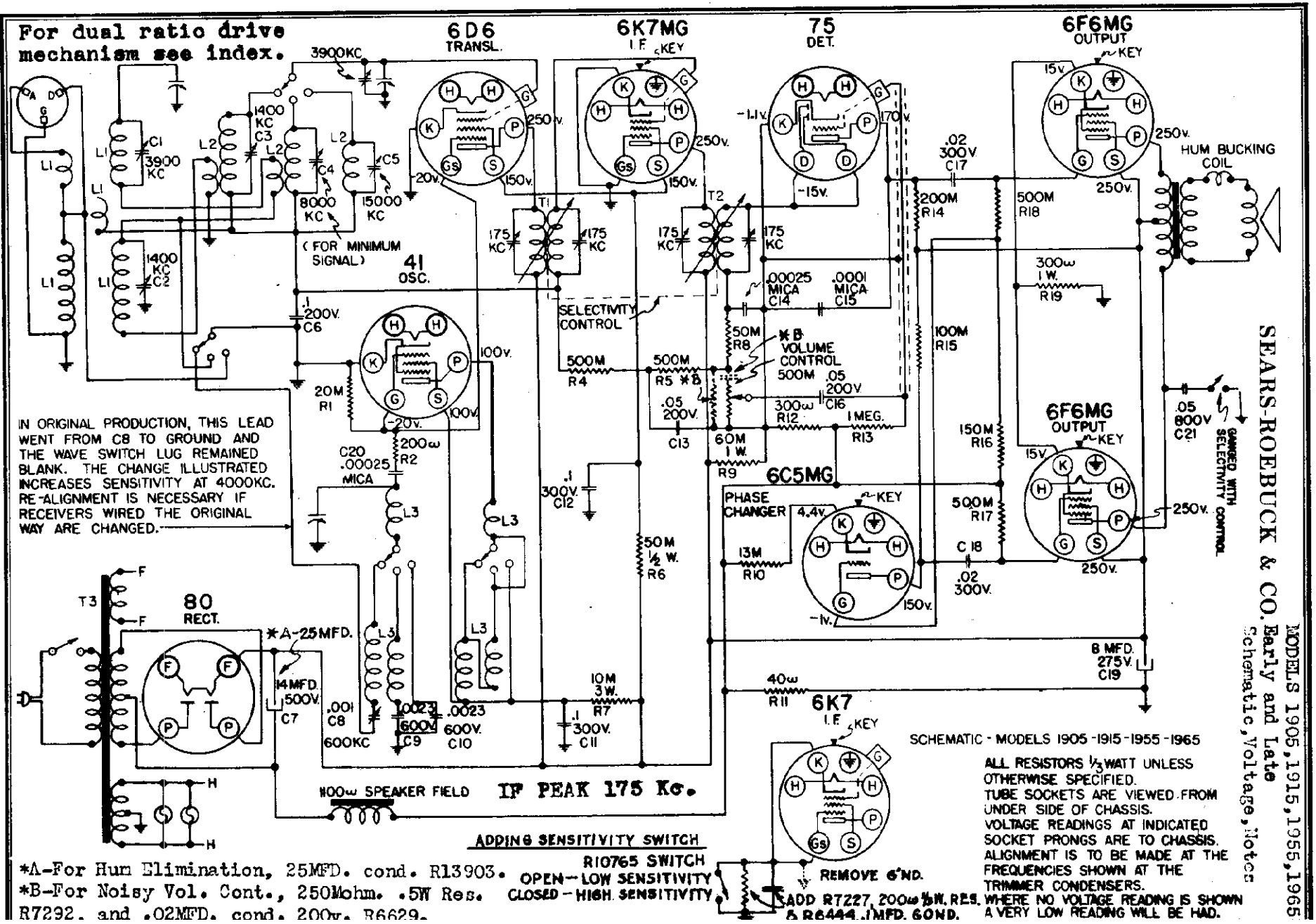

*A-For Hum Elimination, 25MFD. cond. R13903.
*B-For Noisy Vol. Cont., 250Mohm. .5W Res. R7292. and .02MFD. cond. 200v. R6629.

Schematic, Voltage, Notes

MODELS 1905,1915,1955,1965
Alignment,Chassis,Trimmers SEARS-ROEBUCK & CO.

ALIGNMENT PROCEDURE

IF ALIGNMENT

1. Connect the output meter across the speaker voice coil. The low scale of the meter should be used (approximately 3 volts). Turn the wave switch to the BROADCAST position.

2. Turn the Variable Selectivity and Tone Control knob all the way to the right (clockwise). Loosen the set screws holding the flexible cables that change the IF coupling. Push the cables into the tubes as far as possible and tighten the set screws. Be sure the knob is kept at its extreme clockwise position during this procedure. Be careful when tightening the set screws that they are not screwed down so far that the cable wires are cut.

3. Set the test oscillator to 175 kc. Connect the ground lead of the test oscillator in series with .1 MFD condenser, to the receiver chassis. Attach the "hot" lead of the test oscillator to the control grid cap of the 6K7 tube.

4. Turn the Variable Selectivity control all the way to the left (sharpest position). Then carefully tune the IF output transformer for maximum output. The IF output transformer is the square can unit nearer the rear of the chassis. The volume control of the receiver should be turned all the way on during the adjustment and the output from the test oscillator kept at the lowest possible value.

5. Change the test oscillator connection from the control grid cap of the 6K7 to the control grid cap of the 6D6 tube. Then adjust the IF input transformer for maximum output meter reading. The receiver volume control must be all the way on and the output from the test oscillator kept at its lowest value, as mentioned in the preceding paragraph.

6. Change the test oscillator connection back to the 6K7 tube and repeat the IF output transformer adjustment for greater accuracy. Then change the test oscillator connection back to the 6D6 tube and repeat the IF input transformer adjustment for greater accuracy.

7. Connect the "hot" lead of the test oscillator to the control grid of the 6D6 tube and turn the variable selectivity and tone control knob all the way to the right (broadest position). Starting with the test oscillator adjusted to about 1500 KC., slowly increase the frequency of the test oscillator until it goes through resonance with the receiver and then on beyond resonance. It will be found that as resonance is approached a peak reading is had on the output meter. As the frequency of the test oscillator is increased, the output meter reading decreases and then increases again as the test oscillator frequency is further increased. That is, the resonance curve of the IF transformers, in the broad position, has a peak at either side and a hollow in the center. The output meter readings of the two peaks should be the same. If they are not, tune the test oscillator to resonance with the weaker peak. Then adjust the upper of the two tuning condensers of the IF output transformer (the square unit nearer the rear of the chassis) to increase the output meter reading. Only a very slight adjustment is necessary. Recheck the relative readings of the two peaks by tuning the test oscillator through resonance with the receiver as before. When properly adjusted, the two peaks will give equal output meter readings.

RF ALIGNMENT

Preliminary:

Alignment must be made in the same sequence as described below. During all of the alignment, the Variable Selectivity and Tone Control should be turned all the way to the left (sharpest position). Connect the ground lead of the test oscillator, in series with a .1 MFD condenser to the receiver chassis. Connect the output meter across the loud speaker voice coil as for IF alignment. The volume control of the receiver should be turned all the way on and the output from the test oscillator kept at its lowest possible value during all of the alignment procedure. Fully mesh the variable condenser and see that the station selector dial is horizontal. The Band Spread pointer should point straight up.

Short Wave (C) Band:

1. Turn the wave band switch to the "C" position. Connect the "hot" lead of the test oscillator, in series with a 400 Ohm resistor, to the terminal marked "A" on the antenna terminal block at the rear of the chassis.

2. Set the test oscillator to 15,000 kc. and tune in its signal. Adjust C5 for maximum output. The Variable Condenser should be rocked back and forth a degree or two while making the adjustment. It may be found that two peaks can be obtained at two different settings of the trimmer. Use the one in which the trimmer is screwed further in (greater capacity).

3. Change the signal generator frequency to 6,000 kc. and tune in its signal. Then adjust C6 for minimum output meter reading. (Note that this adjustment is to be for minimum output meter reading, not maximum reading).

Short Wave (B) Band:

1. Turn the wave band switch to the "B" position. Leave the test oscillator leads connected as for alignment on the "C" band.

2. Set the test oscillator to 3,900 kc. and adjust the translator trimmer condenser on the variable condenser section nearest the dial. Also adjust the antenna trimmer in the round can unit mounted behind the Variable Selectivity and Tone Control shaft. The variable should be rocked back and forth a degree or two while making the adjustments. If two peaks can be obtained, use the adjustment in which the trimmers are screwed furthest in.

CAUTION:- All of the adjustments must be made in the order stated and must not be changed during succeeding operations.

3. Repeat operation #2 of Short wave "C" band for greater accuracy.

Broadcast (A) Band:

1. Disconnect the 400 Ohm resistor from the "hot" lead of the test oscillator and in its place, connect a .00095 MFD condenser. The condenser in turn is connected to the "A" terminal on the antenna terminal block at the rear of the chassis.

2. Turn the wave band switch to the BROADCAST position. Set the test oscillator to 600 kc. and tune in its signal. Then adjust the broadcast oscillator padder, C8, for maximum output meter reading. The variable condenser should be rocked a degree or two while making the adjustments.

3. Set the test oscillator to 1400 kc. and tune in its signal. Then adjust C2 and C3 for maximum output meter reading. The variable should be rocked back and forth a degree or two while making the adjustments. If two peaks can be obtained, use the adjustments in which the trimmers are screwed furthest in.

4. Repeat operation #2 for greater accuracy.

SERVICE NOTE ON DIAL DRIVE RATIO MECHANISM

There is a "U" shaped tension washer which fits into a groove at the back end of the variable selectivity control shaft. This washer must be placed on the shaft so that the convex side of the washer faces the back end of the shaft. If the washer is put on wrong, with the concave side facing the back of the shaft, the washer will work itself off the shaft and the shaft then will become loose and can be pulled off.

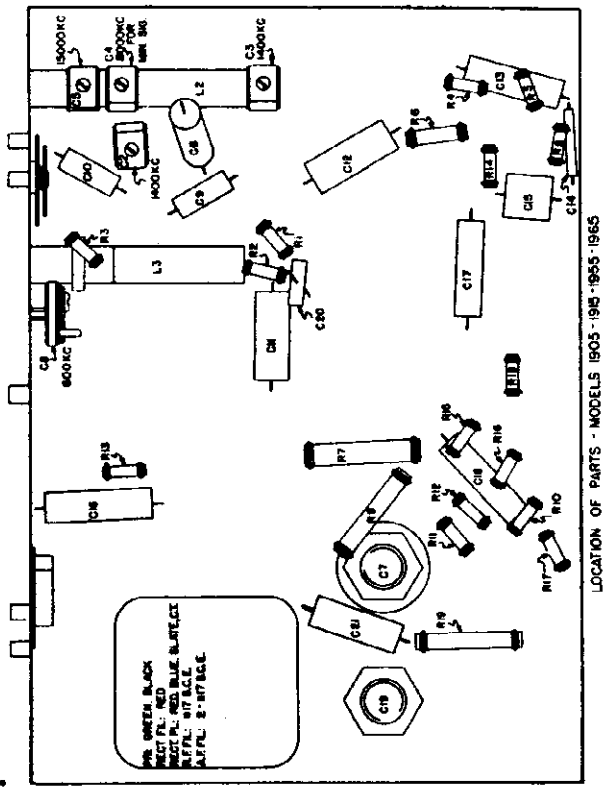

TO REDUCE IMAGE RESPONSE

To reduce image response, turn the variable selectivity and tone control to its sharpest position (all the way to the left) and turn the volume control all the way on. Couple a test oscillator, adjusted to 1000 KC, to the antenna lead of the receiver and tune in its signal. The test oscillator must be adjusted to give high output.

Leaving the receiver tuned to 1000 KC, change the test oscillator frequency to approximately 1380 KC. Carefully adjust the test oscillator frequency so that its signal (the image) will be heard loudest in the receiver.

There is a wire that runs from the stator of the trimmer, C5, to a lug on the wave switch. Using a piece of bakelite or wood, to prevent hand capacity effects, push this wire up under the coil, L2. The wire should be to hug the coil closely. By pushing just the right amount of this lead under the coil, the image response can be balanced out.

It is not necessary to change any of the alignment adjustments of the receiver.

If a test oscillator is not available and a strong station of about 1380 KC, can be tuned in, this adjustment to eliminate image response can be made as follows:

Turn the volume control of the receiver all the way on and turn the variable selectivity control to its sharpest position, as before. Tune in the image of the station at a frequency 380 KC lower than the assigned frequency of the station. For example, if a station's assigned frequency is 1380 KC, tune in its image at a dial setting of 1000 KC on the receiver and balance out the image by shifting the wire in the same manner as described above for the method using a test oscillator.

Parts may be secured direct from the Colonial Radio Corp., 254 Rano Street, Buffalo, New York.

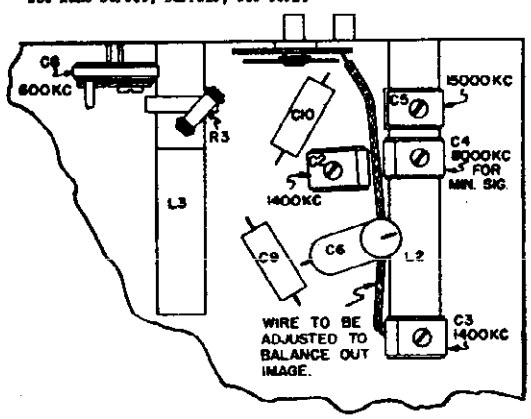

©John F. Rider, Publisher

SEARS-ROEBUCK & CO.

MODELS 1909,1912,1962
1942,1944,1972
Schematic,Voltage,Note

December 27, 1935

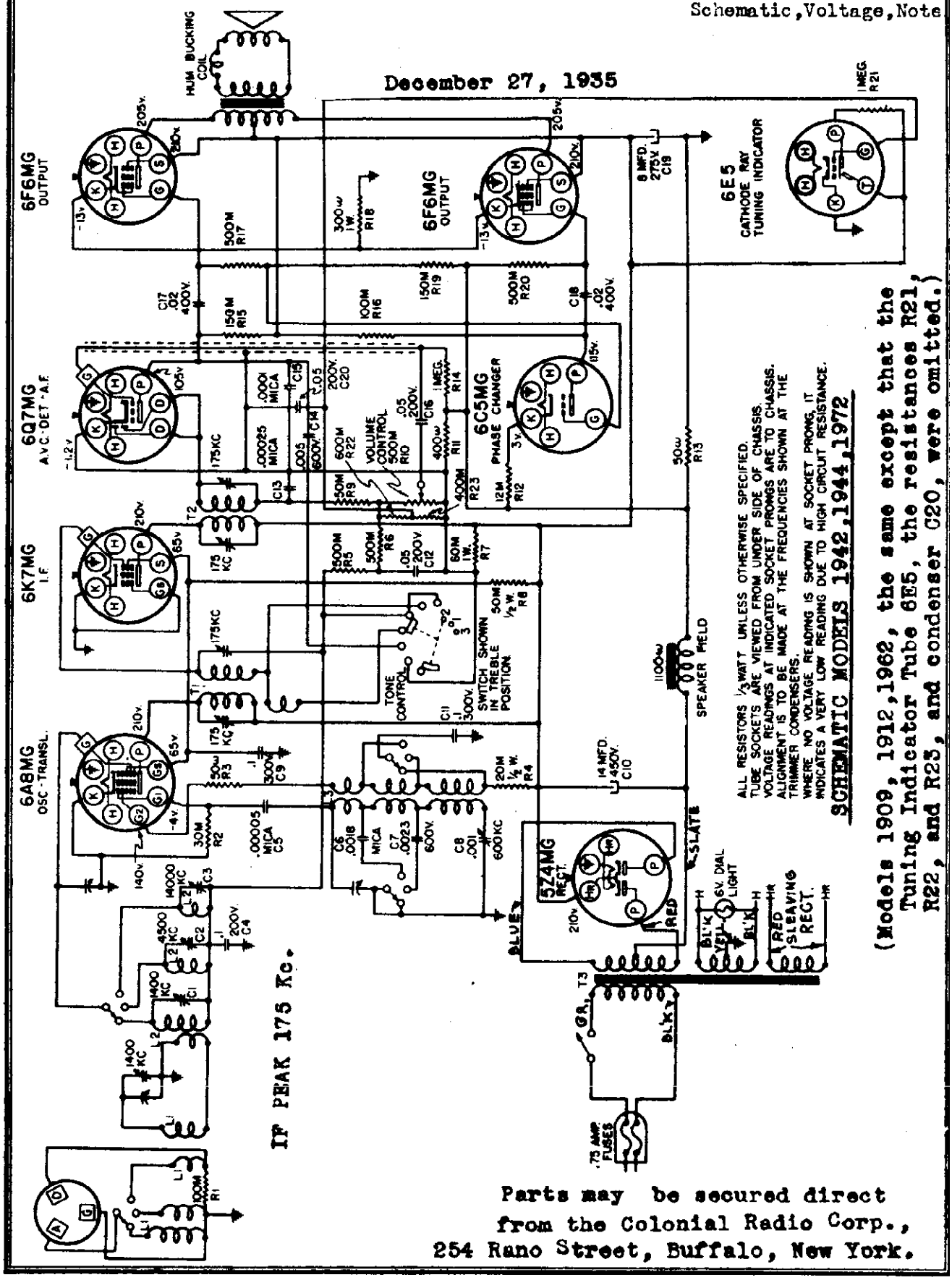

SCHEMATIC MODELS 1942,1944,1972

(Models 1909, 1912, 1962, the same except that the Tuning Indicator Tube 6E5, the resistances R21, R22, and R23, and condenser C20, were omitted.)

Parts may be secured direct from the Colonial Radio Corp., 254 Rano Street, Buffalo, New York.

©John F. Rider, Publisher

MODELS 1909,1912,1962
MODELS 1942,1944,1972
Alignment

SEARS-ROEBUCK & CO.

ALIGNMENT PROCEDURE

IF Alignment:

1. Connect a jumper wire between terminals "D" and "G" on the antenna terminal block. Turn the Wave Band switch to the BROADCAST (A) position, the dial pointer to 900 Kc, and the Tone Control to the #1 position. Connect the low scale of the output meter across the loud speaker voice coil. Connect the ground lead of the test oscillator to the receiver chassis. Turn the receiver volume control all the way on and keep the output from the test oscillator at the lowest value consistent with a satisfactory output meter reading.

2. Set the test oscillator to 175 Kc. Connect the output lead of the test oscillator, in series with a .1 mfd condenser, to the control grid of the 6K7MG IF tube. Then peak the IF transformer, T2, for maximum output meter reading. This transformer is the square can unit mounted at the extreme left rear corner of the chassis, as one faces the rear of the chassis.

3. Change the test oscillator output lead connection (and the .1 mfd condenser) to the control grid of the 6A8MG oscillator-translator tube. Peak the IF transformer, T1, for maximum output meter reading. This transformer is the square can unit with a grid lead coming out of its top.

4. Repeat the adjustments in their original order for greater accuracy. Always keep the test oscillator output at its lowest possible value.

RF ALIGNMENT

Important:

Alignment of band "B" or "C" affects the alignment of the other lower frequency bands. Therefore band "C" must be aligned first, then band "B", then band "A".

Short Wave Band "C":

1. Connect the ground lead of the test oscillator to the receiver chassis. Connect a jumper wire between antenna block terminals "D" and "G", as for IF alignment. Connect the output lead of the test oscillator, in series with a 400 ohm resistor, to the "A" terminal of the antenna terminal block. Turn the Wave Band switch to position "C" and the Tone Control to position "1". During all of the alignment the receiver volume control should be turned all the way on and the output from the test oscillator kept at its lowest possible value.

2. Set the test oscillator to 14,000 kc and tune in its signal. Then adjust the short wave translator trimmer, C3, for maximum output meter reading. The locations of all of the trimmers are shown in the Location of Parts Illustration. The variable should be rocked a degree or two while making the adjustment. If two peaks are found at two different settings of C3, use the adjustment in which the trimmer is screwed further in (greater capacity).

Short Wave Band "B":

1. Turn the Wave Band switch to position "B". All other receiver connections and control settings remain the same as for band "C" alignment.

2. Set the test oscillator to 4500 kc and tune in its signal. Then peak the translator trimmer, C2, for maximum output meter reading. The variable should be rocked a degree or two during the adjustment. If two peaks can be obtained at two different settings of the trimmer, use the adjustment in which the trimmer is screwed further in (greater capacity).

Broadcast Band "A":

1. Remove the 400 ohm resistor that was connected in series with the test oscillator output lead, for alignment on the other two bands. Replace this resistor with a .00025 mfd mica condenser. Turn the Wave Band switch to the "A" position. Other connections and settings remain the same as for previous alignment.

2. Set the test oscillator to 1400 kc and tune in its signal. Then adjust the broadcast antenna and translator trimmers for maximum output meter reading. The antenna trimmer is the one on the middle section of the variable condenser. The broadcast translator trimmer, C1, is mounted on the translator coil as shown in the Location of Parts Illustration.

3. Set the test oscillator to 600 kc and tune in its signal. Then adjust the broadcast oscillator padding condenser, C8, for maximum output meter reading. The variable should be rocked a degree or two during the adjustment.

4. Repeat the 1400 kc adjustments and then the 600 kc adjustments for greater accuracy. Always keep the test oscillator at its lowest possible value.

5. Recheck the setting of band "C" translator trimmer, C3, at 14,000 kc.

Dial Calibration:

Set the test oscillator to 900 kc and tune in its signal, or tune in a 900 kc station. Then set the dial pointer to 900 kc without changing the setting of the variable.

Adjustment To Minimize Image Response:

1. Set the test oscillator to 1000 kc and tune in its signal. If the test oscillator output is calibrated it should be set to .1 volts. Leaving the receiver tuned to 1000 kc, change the test oscillator frequency until the image is heard. This will occur when the test oscillator is tuned to 1350 Kc.

2. There is a yellow lead running from the wave switch to one side of the translator trimmer condenser, C3. The image response can be minimized by placement of this yellow lead.

SENSITIVITIES

The following are average sensitivities and they will serve as a guide in trouble shooting. In order to make the measurements a test oscillator having a calibrated attenuator must be used. The figures given are those required to obtain an output meter reading of 1.1 volts. Readings for the IF stage are to be made with a .1 mfd condenser in series with the test oscillator output lead. Readings for the Broadcast band are with a .00025 mfd mica condenser, and for the Short Wave bands with a 400 ohm resistor in series with the test oscillator output lead, as used during the alignment procedure. The receiver volume control must be left on full.

6K7MG IF Grid (175 kc) - 2000 uv.
6A8MG Translator (175 kc) - 30 uv.
6A8MG Translator (1000 kc, and with a .00025 mfd mica condenser in series with test oscillator output lead) - 35 uv.

Broadcast Band (To be measured with Tone Control in #1 position):

600 KC. - 15 uv.
1000 KC. - 20 uv.
1400 KC. - 20 uv.

(Continued)

Band "B" (To be measured with Tone Control in #2 pos

1800 KC. - 15 uv.
3000 KC. - 12 uv.
4500 KC. - 13 uv.

Band "C" (To be measured with Tone Control in #2 pos

6,000 KC. - 35 uv.
10,000 KC. - 15 uv.
14,000 KC. - 5 uv.

©John F. Rider, Publisher

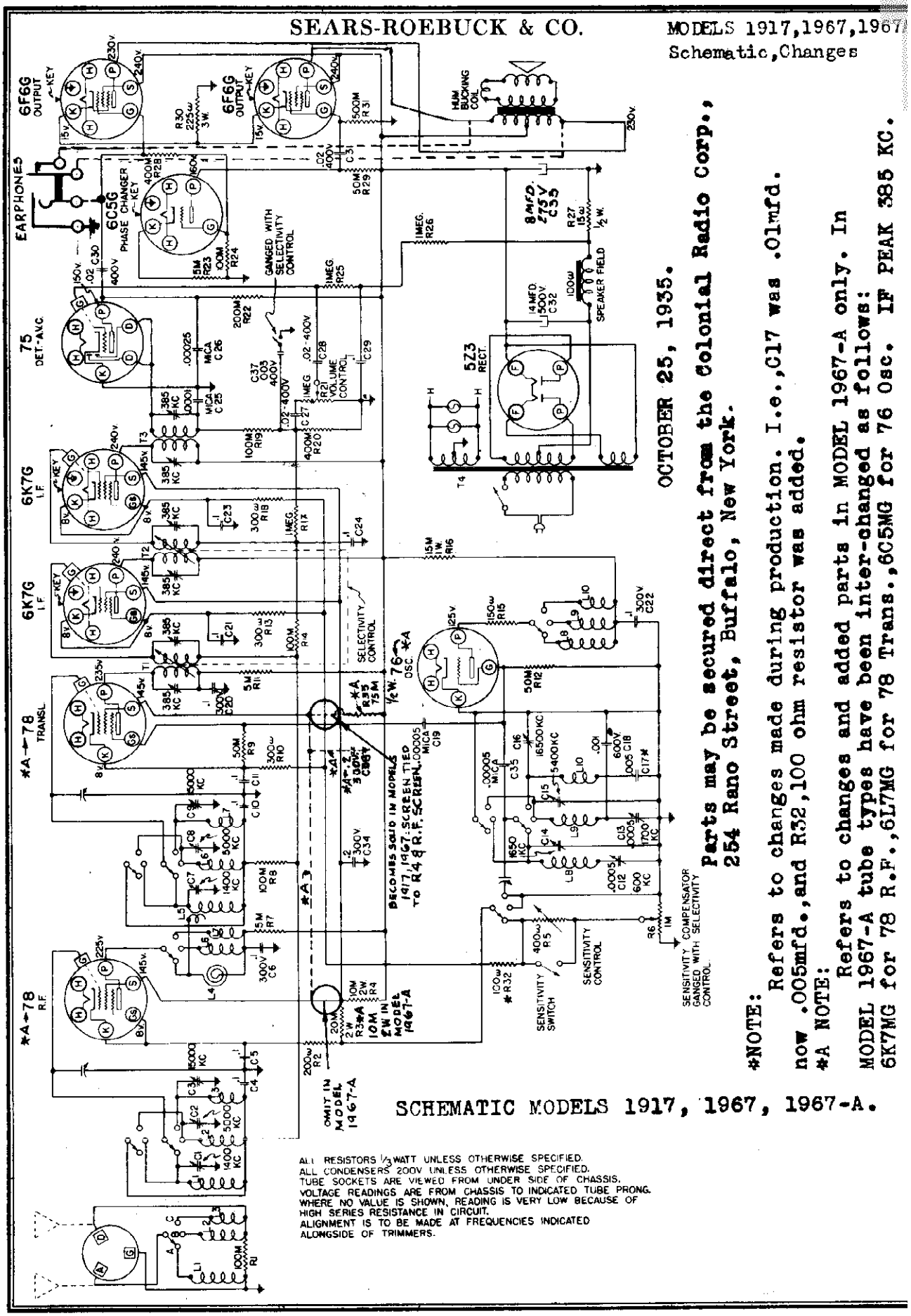

©John F. Rider, Publisher

MODELS 1917,1967,1967A
Chassis,Trimmers,Notes

SEARS-ROEBUCK & CO.

The Variable Selectivity And Tone Control:

Earlier production used a bakelight cam for varying the coupling of the IF transformers. In sets using the bakelight cam it is necessary to turn the control all the way to the left (the sharpest position) before tuning in anybroadcast station. For short wave reception the knob should be turned all the way to the left so that the numeral "1" comes opposite the marker pin.

Later production used a metal rack and pinion for actuating the variable coupling of the IF transformers. In sets using the metal rack and pinion the Variable Selectivity and Tone Control knob may be left in the "1" position for simplified operation of the receiver. This position is an "average" one giving excellent tone quality and sufficient selectivity. However, to obtain the full range of adjustment possible with this control it must be operated the same as the bakelight cam type of control. That is, the control knob must be turned all the way to the left before tuning in any station and then turned to the point giving the desired tone after the station has been tuned in properly.

In some of these sets when the Variable Selectivity and Tone Control knob is turned all the way to the left an additional .005 mfd. condenser is switched into the circuit. This results in a still further deepening of the tone thereby increasing the tone control range provided by the Variable Selectivity and Tone Control knob.

The AVC Circuit:

The diode current of the 7f tube, flowing through the 1000 ohm resistor, R19, creates a voltage drop across it. This voltage is applied to the control grids of the 7G and 6K7G tubes to provide AVC.

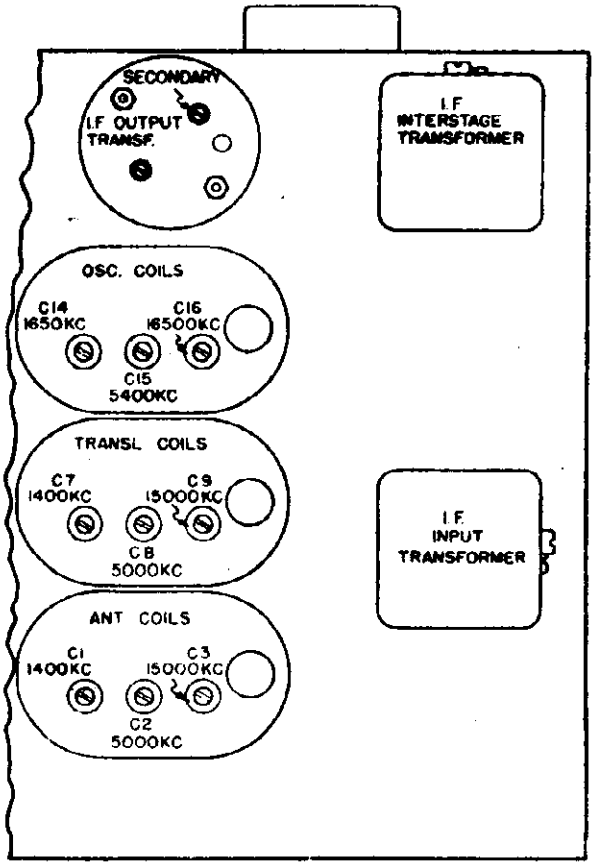

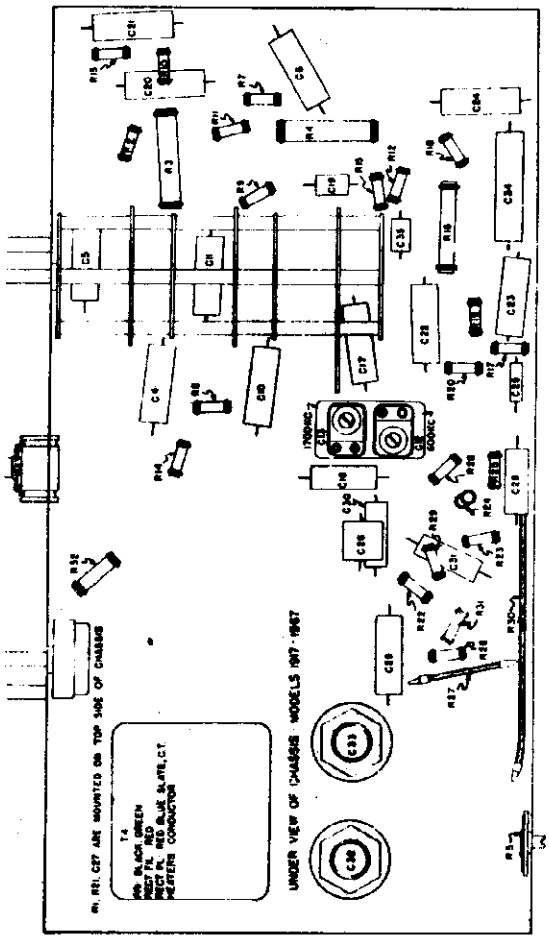

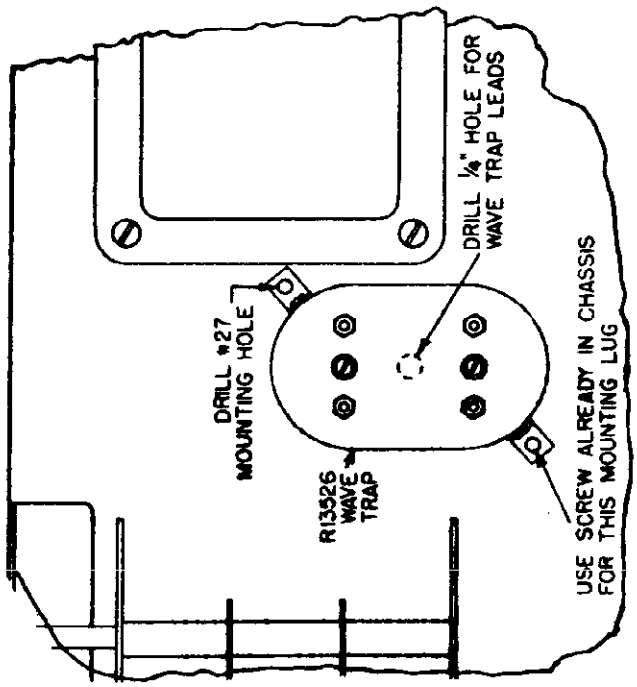

©John F. Rider, Publisher

ALIGNMENT PROCEDURE

IF Alignment:

1. Connect the output meter (low scale) across the loud speaker voice coil. Turn the wave band switch to the broadcast position and the "On-Off" switch knob only far enough to turn the receiver on.

2. Turn the Variable Selectivity and Tone Control knob all the way to the left (sharpest position). Loosen the set screws holding the flexible cables that actuate the variable coupling of the IF transformers. Push the cables all the way into the tubes and tighten the set screws. Be sure the Variable Selectivity and Tone Control knob remains in its extreme clockwise position during the operation. Be careful when tightening the set screws that they are not screwed down so far that the cable wires are cut.

3. Connect the ground lead of the test oscillator, in series with .1 mfd. condenser, to the receiver chassis. Set the test oscillator to 582 kc.

4. Connect the "hot" lead of the test oscillator to the control grid of the 7S translator tube. With the Variable Selectivity and Tone Control knob turned all the way counter clockwise (sharpest position), adjust the IF output transformer for maximum output meter reading. This transformer is the round can unit mounted at the top rear of the chassis. The Volume Control of the receiver should be turned all the way on and the output of the test oscillator kept at its lowest possible value during the adjustment.

5. Leaving the receiver controls and the test oscillator connections the same as in the preceding paragraph, adjust the IF interstage transformer for maximum output meter reading. This transformer is the square can unit at the rear left of the chassis (as one faces the rear of the chassis).

6. Leaving all connections and controls as before, tune the IF input transformer for maximum output meter reading. This transformer is the square can unit at the front left of the chassis (as one faces the rear of the chassis).

7. Repeat operations #4, #5, #6 in the order named to insure accurate alignment. Always use the lowest possible output from the test oscillator to render the AVC action of the receiver inoperative and to insure precise alignment.

8. Leave the "hot" lead of the test oscillator connected to the control grid of the 7S translator tube and turn the Variable Selectivity and Tone Control knob all the way to the right (broadest position). Starting with the test oscillator adjusted to about 580 kc, slowly increase its frequency until it goes through resonance with the receiver and then on past resonance. It will be found that the output meter registers a peak as the test oscillator approaches resonance with the IF stages. The output meter reading decreases as the test oscillator goes through resonance and then increases again as the test oscillator frequency is increased beyond resonance. In other words, the resonance curve of the IF transformers, in the broad position, has a peak at either side and a hollow in the middle. These two peaks, as indicated on the output meter, should be equal in value. If they are not, tune the test oscillator to resonance with the weaker peak. Then adjust the IF output transformer secondary to increase the output meter reading. Only a slight adjustment is necessary. The location of the IF output transformer secondary adjustment is shown in the service illustration.

RF ALIGNMENT

During all of the alignment the Variable Selectivity and Tone Control should be turned all the way to the left (sharpest position). The "On-Off" switch should be turned only far enough to turn the receiver on. Connect the ground lead of the test oscillator, in series with a .1 mfd. condenser, to the receiver chassis. The output meter is to be connected across the loud speaker voice coil, as for IF alignment. The Volume Control of the receiver should be turned all the way on and the output from the test oscillator kept at its lowest possible value during all of the alignment procedure. Fully mesh the variable condensor and see that the Station Selector dial pointer is horizontal. The Band Spread pointer should point straight up.

Broadcast (A) Band:

1. Turn the wave band switch to the "A" position. Connect the "hot" lead of the test oscillator, in series with a .00025 mfd. condenser, to the terminal marked "A" on the antenna terminal block at the rear of the chassis.

2. Set the test oscillator to 1550 kc. Open the variable condenser all the way and tune in the test oscillator signal. Adjust the broadcast oscillator trimmer condenser, C14, for maximum output meter reading. The locations of all of the trimmers are shown in the Service Illustrations. It may be found that two peaks can be obtained at two different settings of the trimmer. Use the one in which the trimmer is screwed further out (lesser capacity).

3. Set the test oscillator to 1400 kc and tune in its signal. Then adjust the antenna and translator trimmer condensers, C1 and C7. The variable condenser should be rocked a degree or two while making this adjustment. If two peaks can be obtained, use the adjustment in which the trimmers are screwed further in (greater capacity).

4. Set the test oscillator to 600 kc and tune in its signal. Then adjust the broadcast oscillator padder, C12, for maximum output. This padder is mounted under the chassis. Rock the condenser back and forth a degree or two while making the adjustment.

5. Repeat the 1550 kc and 1400 kc adjustments for greater accuracy. Always keep the output from the test oscillator at its lowest possible value in order to render the AVC action of the receiver inoperative and to insure precise alignment.

Short Wave (B) Band:

1. Turn the wave band switch to the "B" position. Leave the "hot" lead of the test oscillator connected, in series with a .00025 mfd. condenser, to the "A" terminal of the antenna terminal block, as for BROADCAST alignment.

2. Set the test oscillator to 5400 kc. Open the variable condenser all the way and adjust the oscillator trimmer, C11, for maximum output meter reading. It may be found that two peaks can be obtained at two different settings of the trimmer. Use the one in which the trimmer is screwed further out (lesser capacity).

3. Set the test oscillator to 5000 kc and tune in its signal. Then adjust the antenna and translator trimmers, C2 and C8, for maximum output meter reading. The variable should be rocked during the adjustment. If two peaks can be obtained, use the adjustment in which the trimmers are screwed further in (greater capacity).

4. Set the test oscillator to 1700 kc and tune in its signal. Then adjust the padding condenser, C13, for maximum output meter reading. The variable condenser is mounted under the chassis.

Short Wave (C) Band:

1. Connect the "hot" lead of the test oscillator, in series with a 400 ohm resistor, to the "A" terminal on the antenna terminal block at the rear of the chassis. This 400 ohm resistor replaces the .00025 mfd. condenser used for the other two bands.

2. Set the test oscillator to 16600kc. Open the variable condenser plates all the way and adjust the oscillator trimmer, C15, for maximum output meter reading. It may be found that two peaks can be obtained at two different settings of the trimmer. Use the one in which the trimmer is screwed further out (lesser capacity).

3. Set the test oscillator to 15000 kc and tune in its signal. Then adjust the antenna and translator trimmers, C3 and C9, for maximum output. The variable should be rocked during the adjustment. If two peaks can be obtained use the adjustment in which the trimmers are screwed further in (greater capacity).

Adjustment of The Sensitivity Control At The Rear Of The Receiver:

There is a Sensitivity Control adjustment at the rear of the receiver. This control determines the sensitivity of the receiver when the Sensitivity Control knob at the front of the cabinet is in the "NORMAL" position. When the Sensitivity Control knob is in the "HIGH" position the maximum possible sensitivity of the receiver is obtained regardless of the setting of the control at the rear of the chassis. The adjustment is correctly set for average conditions and ordinarily should not be touched. However, if the receiver is installed in an electrically noisy location it may be desirable to decrease the sensitivity to prevent between-station noise as the receiver is tuned from station to station. This adjustment can also be used to increase the sensitivity of the receiver, when the front Sensitivity Control knob is in the "NORMAL" position, for locations remote from broadcasting stations. However, this should be done only if there is no difficulty with between-station noise. The maximum sensitivity of the receiver can always be had, regardless of the setting of the Sensitivity Control adjustment at the rear of the chassis, by turning the front control knob to the "HIGH" position. To make the adjustment proceed as follows:

Turn the front Sensitivity Control knob to the "NORMAL" position. Turn the Variable Selectivity and Tone Control knob so that the numeral "1" is opposite the marker pin and tune in some broadcast station from which satisfactory reception can be had. Adjust the Volume Control to the level ordinarily used. Leaving all other controls untouched turn the Station Selector knob to some point where no station will be heard. If one part of the scale seems noisier than the rest of the scale turn the pointer to this noisier position. It will be found that turning the screw driver adjustment at the rear of the chassis, near the speaker socket, either increases or decreases the noise, depending upon which direction the adjustment is turned. Turn the adjustment to that point where the noise is reduced enough to be as objectionable. Do not turn the control further than necessary to eliminate the objectionable noise.

Installing A Jack For The Use Of Earphone:

A hole is provided in the rear of the chassis, near the speaker socket, for installing an earphone jack when desired by the customer. This hole is plugged with a brass insert that can be removed. The connections are shown on SCHEMATIC IN DOOR PANEL LINER.

ELIMINATING CODE INTERFERENCE FROM AIRPORT BEACONS

Under certain conditions code interference from airport beacons may be experienced. These conditions are:

1. When the receiver is located very near to the airport.

2. When the beacon transmitter frequency is near the IF frequency of the receiver.

This type of interference can be identified through the fact that it occurs only when the Wave band switch of the receiver is in the BROADCAST position and also that it occurs at all settings of the Station Selector pointer.

When this type of interference is encountered it can be eliminated by adding a wave-trap to the receiver as described below. (Part #R13826 - $2.10 each.)

1. Mount the wave-trap as shown in the illustration. It will be necessary to drill a hole for the mounting screw next to the power transformer. There is a screw already in the chassis that can be used for the other mounting lug of the wave-trap. It also will be necessary to drill a 1/4" hole in the chassis, under the wave-trap, for the wave-trap leads.

2. Remove the coil shield nearest the front of the chassis.

3. There is a green wire running from the broadcast antenna coil primary to the wave switch. Unsolder this wire from the wave switch.

4. Solder the blue lead of the wave-trap to the antenna coil primary lead which originally ran to the wave switch. A piece of spaghetti or tape should be placed over the soldered connection.

5. Solder the yellow lead of the wave-trap to the wave switch terminal from which the original antenna coil lead was removed. It may be necessary to splice on an additional piece of wire if the yellow lead does not reach to the wave switch.

6. Connect the green lead of the wave-trap to ground (chassis).

7. The wave-trap is pre-tuned to the IF frequency of the receiver. Therefore, it is not necessary to make any tuning adjustments after it is installed. Neither is it necessary to change any of the alignment adjustments of the receiver.

The Dual Ratio Condenser Drive Shaft:

There are two positions in which the Station Selector knob can be put before turning it. When the knob is pushed in, the condenser drive ratio is approximately 17 to 1. When the knob is pulled out, the dial ratio becomes approximately 70 to 1, making possible very precise tuning.

The mechanism proper is of the planetary drive type, using ball bearings in contact with a cone shaped retainer. Do not attempt to take the mechanism apart. Should any difficulty with slippage occur, it can be corrected as described in the following paragraph. Slippage that occurs when the condenser reaches its limit of rotation in either direction is normal. However, if there is slippage at any other part of the condenser travel, proceed as follows:

Determine whether or not the shaft end (11) is turning. See the illustration. If the shaft end turns but the gears (8 and 9) do not, remove the U shaped tension washer (10) and bend it to increase its curvature and tension. Then replace it. Note that the convex side of the washer should face the shaft end and the concave side should face the gears. It is advisable to put a drop of solder across the open end of the U washer to prevent all possibility of its working off the shaft.

If the shaft end does not turn, the slippage is occuring in the planetary drive mechanism. This will occur only when the knob is in its "out" or slow position. In this case, squeeze the tabs (8) slightly, with a pair of pliers to increase the pressure. Do not squeeze them too much, or the drive will become stiff and hard to turn.

When placing the knob on its shaft, be careful not to use force in pressing it on or the splines (3 and 4) will become burred. The floating sleeve (2) must be centered on the shaft in order to permit the knob to slip over it. If the knob does not go on easily, do not force it but try it several times, until the sleeve falls into such a position that it allows the knob to slip on. Care must be taken when tightening the set screw that it is not tightened down on the splines, but comes in the space between the two splines. This is best done by removing the set screw and positioning the knob so that the set screw hole comes over the sleeve, between the splines. Then insert and tighten the set screw.

©John F. Rider, Publisher

MODELS 1918,1968
Schematic,Voltage

SEARS-ROEBUCK & CO.

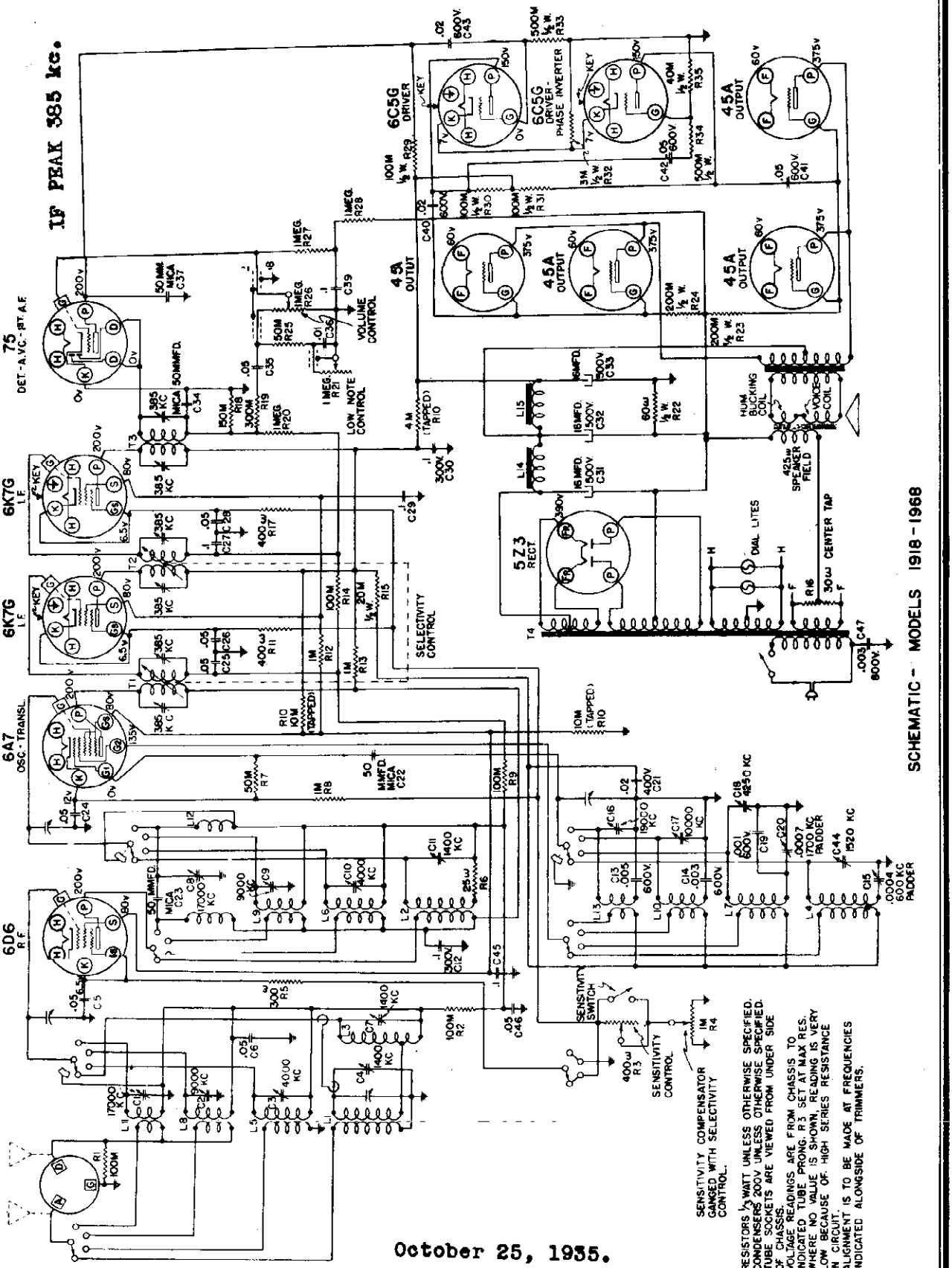

October 25, 1935.

Parts may be secured direct from the Colonial Radio Corp., 254 Rano Street, Buffalo, New York.

SILVERTONE MODELS 1918, 1968

ELIMINATING CODE INTERFERENCE FROM AIRPORT BEACONS

Under certain conditions code interference from airport beacons may be experienced. These conditions are:

1. When the receiver is located very near to the airport.

2. When the beacon transmitter frequency is near the IF frequency of the receiver.

This type of interference can be identified through the fact that it occurs only when the Wave Band switch of the receiver is in the BROADCAST position and also that it occurs at all settings of the Station Selector pointer.

When this type of interference is encountered it can be eliminated by adding a wave-trap to the receiver as described below. (Part #R13526 - $2.10 each.)

1. Mount the wave-trap at the back of the chassis as shown in the illustration. In addition to the holes for the mounting screws it will be necessary to drill a 1/4" hole under the wave-trap for the wave-trap leads.

2. Remove the round shield covering the Broadcast Antenna coil. This shield is at the top front of the chassis, left of the variable condenser.

3. There is a green lead running from the antenna coil primary to the wave switch. (This lead comes from the front right hand lug of the antenna coil.) Remove this wire from the wave switch and from the coil.

4. Solder the blue lead of the wave-trap to the broadcast antenna coil primary lug from which the original wire was removed in operation #3.

5. Solder the yellow lead of the wave-trap to the wave switch terminal from which the original wire was removed in operation #3. If the wave-trap leads are not long enough, solder additional lengths of wire to them.

6. Connect the green lead of the wave-trap to ground (chassis).

7. The wave-trap is pre-tuned to the IF frequency of the receiver. Therefore, it is not necessary to make any tuning adjustments after it is installed. Neither is it necessary to change any of the alignment adjustments of the receiver.

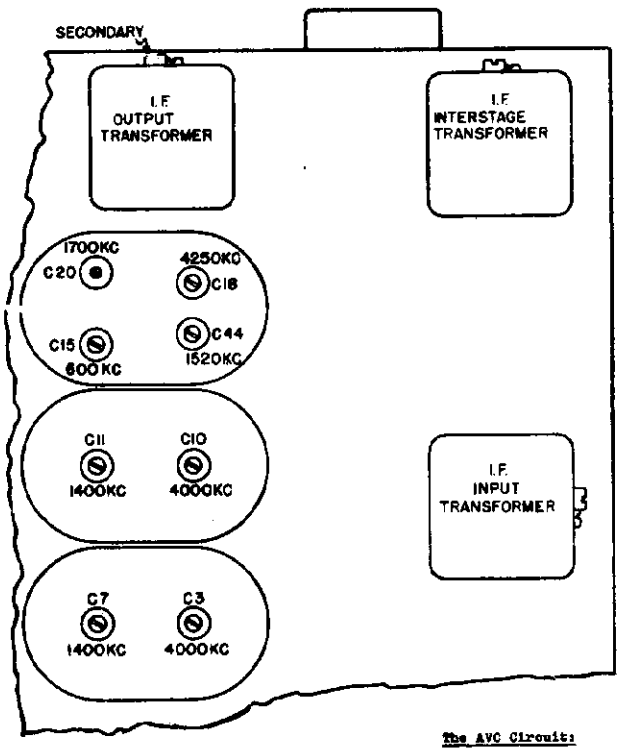

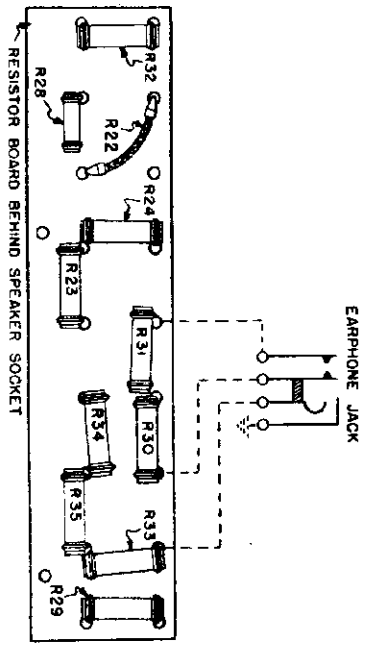

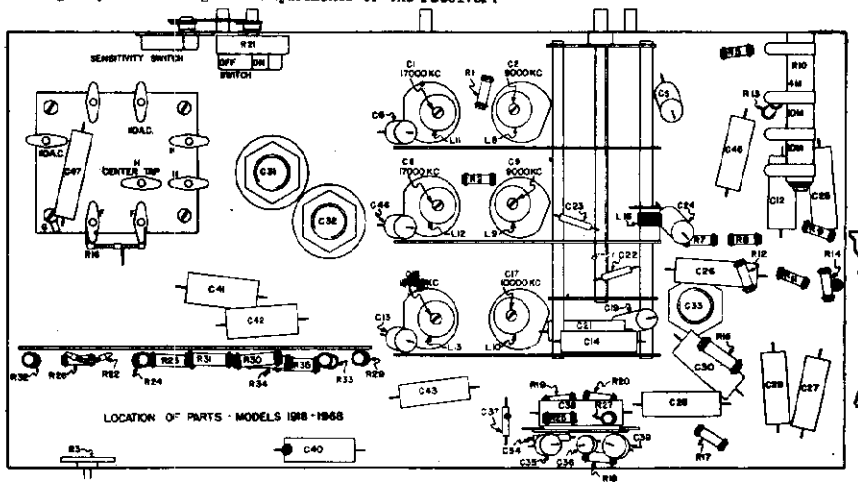

The AVC Circuit:

The diode current of the 75 tube, flowing through the 150M ohms of R18, creates a voltage drop across this resistor. This voltage is applied to the control grid of the 6D6, 6A7 and 6K7G tubes to provide AVC. R20, R14, R9 and R2 are filter resistors to isolate the grid circuits of each stage.

The Audio Circuit:

The output of the triode section of the 75 tube is used to drive the 6C5G tubes which act as a push pull driver stage. These in turn drive the 4-45A's which are connected in parallel push pull.

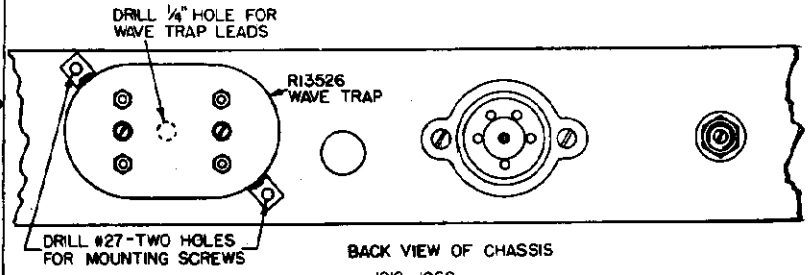

©John F. Rider, Publisher

ALIGNMENT PROCEDURE

IF Alignment:

1. Turn the receiver Volume Control all the way on, the Sensitivity Control lever to the right and the lower left knob turned only far enough to switch the receiver on. Connect a wire between terminals "B" and "G" on the antenna terminal block at the rear of the chassis. Turn the wave band switch knob to the BROADCAST, "A", position.

2. Turn the Variable Selectivity and Tone Control knob all the way to the right (sharpest position). Loosen the set screws holding the flexible cables that actuate the variable coupling of the IF transformers. Push the cables all the way into the tubes and retighten the set screws. Be sure the Variable Selectivity and Tone Control knob remains in its extreme clockwise position during the operation. Be careful when tightening the set screws that they are not screwed down so far that the cable wires are cut. The Variable Selectivity and Tone Control Knob must be left at its sharpest position (all the way left) during all of the alignment procedure unless otherwise stated in the procedure.

3. Connect the ground lead of the test oscillator, in series with a .1 mfd. condenser, to the receiver chassis. Set the test oscillator to 385 kc.

4. Connect the "hot" lead of the test oscillator to the control grid of the 6K7G second IF tube. This is the tube that is next to the type 76 tube. Adjust the IF output transformer for maximum output meter reading. The locations of all of the tuning adjustments are shown in the Service Illustrations. Be sure that the Volume Control of the receiver is turned all the way on during all adjustments and that the output of the test oscillator is kept at its lowest possible value.

5. Connect the "hot" lead of the test oscillator to the control grid of the 6K7G first IF tube and adjust the IF interstage transformer. As before, the output from the test oscillator must be kept at its lowest possible value in order to render the AVC ineffective and to insure precise alignment.

6. Connect the "hot" lead of the test oscillator to the control grid cap of the 6A7 oscillator-translator tube and adjust the IF input transformer for maximum output meter reading.

7. Carefully repeat operations #4, #5, and #6 for greater accuracy. As the sensitivity of the receiver is brought up by alignment, the output from the test oscillator should be decreased so that it is always kept at the lowest value that will give a satisfactory reading on the output meter.

8. Connect the "hot" lead of the test oscillator to the control grid cap of the 6A7 oscillator-translator tube and turn the Variable Selectivity and Tone Control knob all the way to the right (broadest position). Starting with the test oscillator adjusted to about 350 kc, slowly increase its frequency until it goes through resonance with the receiver (385 kc) and then on past resonance. It will be found that the output meter registers a peak as the test oscillator approaches resonance with the IF stages. The output meter reading decreases as the test oscillator goes through resonance and then increases again as the test oscillator frequency is increased beyond resonance. In other words, the resonance curve of the IF transformers, in the broad position, has a peak at either side and a hollow in the middle. These two peaks, as indicated on the output meter, should be equal in value. If they are not, tune the test oscillator to resonance with the weaker peak. Then, adjust the secondary of the IF output transformer (the upper of the two tuning adjustments) to increase the output meter reading. Only a very slight adjustment is necessary. Recheck the relative readings of the two peaks by tuning the test oscillator through resonance with the receiver, as before. When properly adjusted the two peaks will give equal output meter readings.

9. Leave the "hot" lead of the test oscillator connected to the control grid cap of the 6A7 oscillator-translator tube. With the test oscillator set accurately at 385 kc and the Variable Selectivity and Tone Control all the way to the left (sharp) position, note the output meter reading. Then, turn the Variable Selectivity and Tone Control knob all the way to the right and note the output meter reading. Use as low an output from the test oscillator as is consistent with a satisfactory output meter reading. There should be little or no difference in output meter readings for the two positions of the Variable Selectivity and Tone Control knob. Any great difference indicates improper alignment or improper setting of the IF coupling control cables.

RF ALIGNMENT

Preliminary:

1. Turn the receiver Volume Control all the way on; the Sensitivity Control lever to the right and the lower left knob turned only far enough to switch the receiver on. Connect a wire between terminals "D" and "G" on the antenna terminal block at the rear of the chassis. Keep the output from the test oscillator at its lowest possible value during all of the alignment. Fully mesh the variable condenser and see that the Station Selector dial pointer is horizontal. The band spread pointer should point straight up.

Broadcast (A) Band:

1. Turn the Wave Band Switch knob to the "A" position. Connect the "hot" lead of the test oscillator, in series with a .00086 mfd. condenser, to the terminal marked "A" on the antenna terminal block at the rear of the chassis.

2. Set the test oscillator to 1520 kc and open the variable condenser plates all the way. Adjust the broadcast oscillator trimmer condenser, C44, for maximum output meter reading. It may be found that two peaks can be obtained at two different settings of the trimmer. Use the one in which the trimmer is screwed further out (lesser capacity).

3. Connect a .0001 mfd. mica condenser from the stator of the RF section of the variable to ground. The RF section is the one second from the dial end of the condenser.

4. Set the test oscillator to 1400 kc and tune in its signal. Then, adjust the broadcast antenna trimmer, C4, for maximum output meter reading. This trimmer is the one on the variable condenser section nearest the dial. The variable should be rocked a degree or two during the adjustment. If two peaks can be obtained use the adjustment in which the trimmer is screwed further in (greater capacity).

5. Remove the .0001 mfd. mica condenser that was used in the preceding operation.

7. Set the test oscillator to 1400 kc and tune in its signal. Then, adjust the RF and translator trimmers, C7 and C11, for maximum output meter reading. The variable should be rocked a degree or two during the adjustment. If two peaks can be obtained, use the adjustment in which the trimmers are screwed further in (greater capacity).

8. Set the test oscillator to 600 kc and tune in its signal. Then, adjust the broadcast oscillator padder, C18, for maximum output meter reading. The variable should be rocked a degree or two during the adjustment.

10. Repeat operations #2 to #9 for greater accuracy. Always keep the test oscillator at its lowest possible value and the Volume Control of the receiver on full.

Short Wave (B) Band:

1. Turn the Wave Band Switch knob to the "B" position. Replace the .00025 mfd. condenser, that was used in the "hot" lead of the test oscillator for the BROADCAST band, with a 400 ohm resistor.

2. Screw the oscillator padding condenser, C80, down tightly.

3. Set the test oscillator to 4250 kc and open the variable condenser plates all the way. Then, adjust the oscillator trimmer, C18, for maximum output meter reading. It may be found that two peaks can be obtained at two different settings of the trimmer. Use the one in which the trimmer is screwed further out (lesser capacity).

4. Set the test oscillator to 4000 kc and tune in its signal. Then, adjust the RF and translator trimmers, C3 and C10, for maximum output meter reading. The variable should be rocked a degree or two during the adjustment. If two peaks can be obtained, use the adjustment in which the trimmers are screwed further in (greater capacity).

5. Set the test oscillator to 1700 kc and tune in its signal. Then, adjust the oscillator padding condenser, C80, for maximum output meter reading. The variable should be rocked a degree or two during the adjustment to insure proper peaking.

6. Repeat operations #3, #4, and #5. Always keep the test oscillator output at its lowest possible value.

Short Wave (C) Band:

1. Leave the "hot" lead of the test oscillator connected to the receiver through a 400 ohm resistor as for "B" band alignment.

2. Turn the wave band switch knob to the "C" position. Set the test oscillator to 10,000 kc. Open the variable condenser plates all the way and adjust the oscillator trimmer, C17, for maximum output meter reading. If two peaks can be obtained at two different settings of the trimmer, use the adjustment in which the trimmer is screwed further out (lesser capacity).

3. Set the test oscillator to 9000 kc and tune in its signal. Then, adjust the RF and translator trimmers, C2 and C9, for maximum output meter reading. The variable should be rocked during the adjustment. If two peaks can be obtained at two different settings of the trimmers use the adjustment in which the trimmers are screwed further in (greater capacity).

4. Set the test oscillator to 4500 kc and tune in its signal. If necessary, shift turns on L8 and L9. If turns are shifted it will be necessary to repeat operation #3.

Short Wave (D) Band:

1. Leave the test oscillator connected as for "C" band alignment. Turn the Wave Band Switch knob to the "D" position.

2. Set the test oscillator to 19,000 kc. Open the variable condenser plates all the way and adjust the oscillator trimmer, C18, for maximum putput meter reading. If two peaks can be obtained at two different settings of the trimmer, use the adjustment in which the trimmer is screwed further out (less capacity).

3. If the calibration of the test oscillator is accurate, set it to exactly 18,000 kc. If the calibration cannot be depended upon, tune in an 18,000 kc station. (This step in the procedure is for the purpose of accurately setting the calibration. If the test oscillator calibration cannot be depended upon and if no 18,000 kc station can be tuned in, this step in the procedure should be omitted). With an 18,000 kc signal tuned in and the dial pointer set to 18,000 kc, readjust C16, if necessary, to secure maximum output meter reading.

4. Set the test oscillator to 9000 kc and tune in its signal. If the dial calibration is off more than one division, shift the turns on the oscillator coil, L13, to make the dial pointer come to its correct dial reading. If it is found necessary to shift turns, operation #3 should be repeated.

5. Set the test oscillator to 17,000 kc and tune in its signal. Then, adjust the RF and translator trimmers, C1 and C8, for maximum output meter reading. The variable should be rocked during the adjustment. If two peaks can be obtained at two different settings of the trimmers, use the adjustment in which the trimmers are screwed further in (greater capacity).

6. Set the test oscillator to 9000 kc and adjust the turns of L11 and L12, if necessary. The use of a "Tuning Wand" is of great help in determining whether shifting of turns is necessary. If it is found necessary, operation #5 must be repeated.

Overall Test:

Connect the test oscillator to the receiver through a .00025 mfd. condenser as for BROADCAST (A) band alignment. Set the test oscillator to 600 kc and tune in its signal with the Variable Selectivity and Tone Control in the sharp position. Leave the Station Selector set at 600 kc and turn the Variable Selectivity and Tone Control to the broad position. Change the test oscillator frequency to 580 kc. Then, slowly increase the frequency of the test oscillator until it goes through resonance (600 kc) with the receiver and on beyond resonance to about 620 kc. It will be found that the output meter registers a peak as the test oscillator approaches resonance (600 kc). The meter reading then decreases as the test oscillator goes through resonance and then increases again as the test oscillator frequency is increased beyond resonance. Care must be used in making these observations since the two peaks lie quite close together. The two peaks as indicated on the output meter should be equal in value. If they are not, tune the test oscillator to resonance with the weaker peak. Then, adjust the broadcast oscillator padder, C18, to increase the reading of the weaker peak. Only a very slight adjustment should be necessary. When properly adjusted the two peaks should give equal output meter readings. If any great adjustment of C18 seems necessary it is an indication that alignment has not been properly made.

©John F. Rider, Publisher

SEARS-ROEBUCK & CO.

MODELS 1918A, 1968A
Schematic, Voltage

Parts may be secured direct from the Colonial Radio Corp., 254 Rano Street, Buffalo, New York

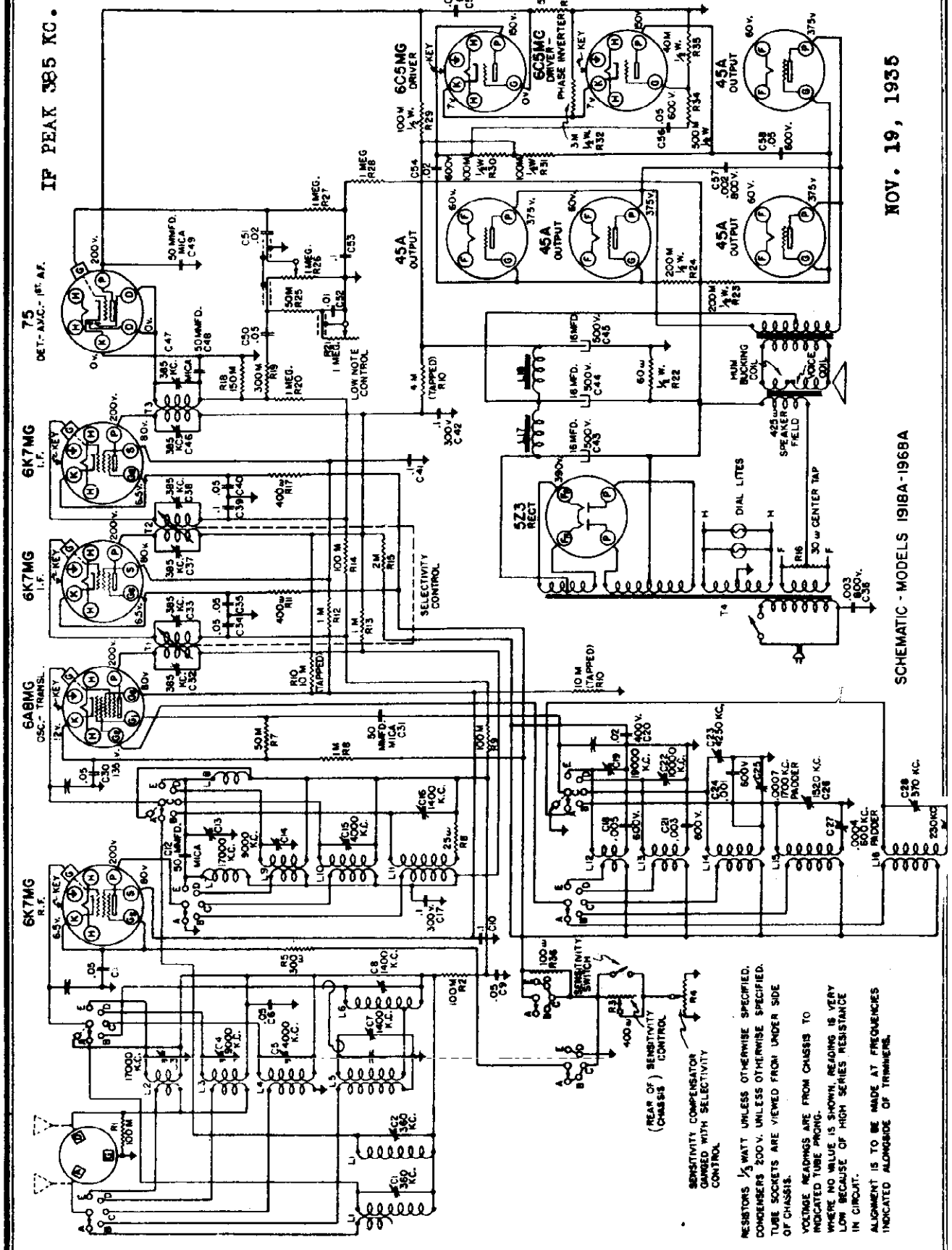

© John F. Rider, Publisher

MODELS 1918A, 1968A
Chassis, Trimmers
Note

SEARS-ROEBUCK & CO.

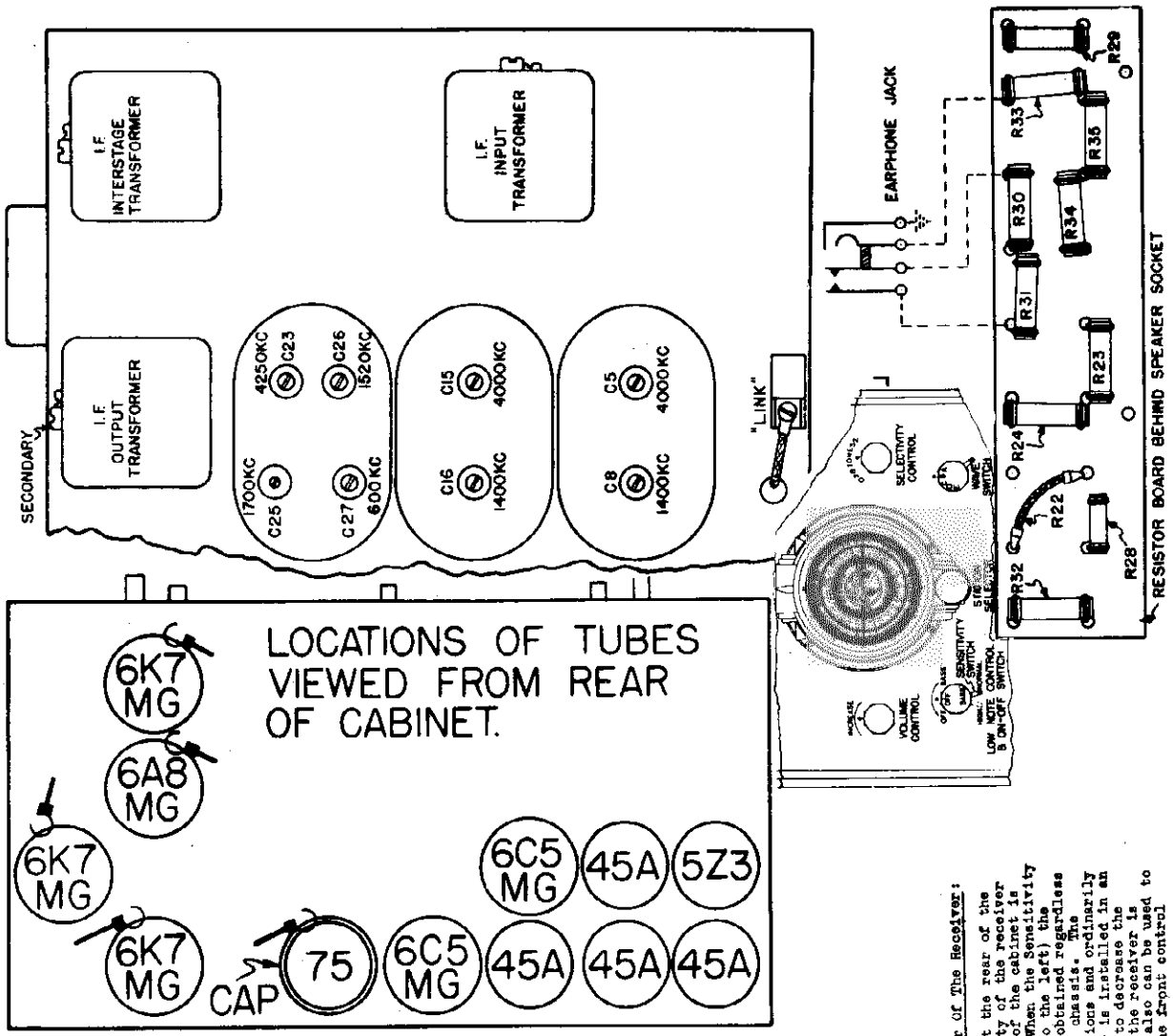

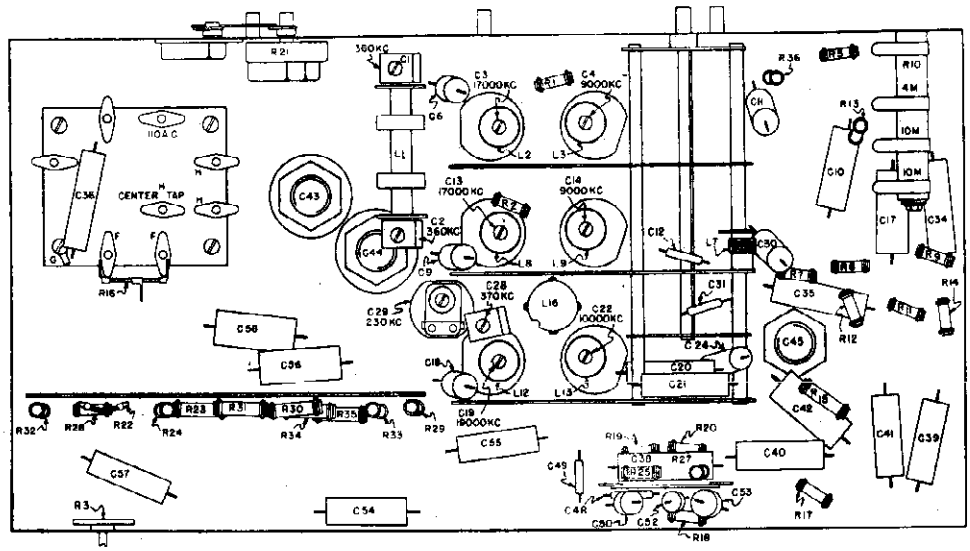

LOCATION OF PARTS - MODELS 1918A - 1968A

Adjustment Of The Sensitivity Control At The Rear Of The Receiver:

There is a Sensitivity Control adjustment at the rear of the receiver. This control determines the sensitivity of the receiver when the Sensitivity Control lever at the front of the cabinet is in the "NORMAL" position (lever to the right). When the Sensitivity Control lever is in the "HIGH" position (lever to the left) the maximum possible sensitivity of the receiver is obtained regardless of the setting of the control at the rear of the chassis. The adjustment is correctly set for "average" conditions and ordinarily should not be touched. However, if the receiver is installed in an electrically noisy location it may be desirable to decrease the sensitivity to prevent between-station noise as the receiver is tuned from station to station. This adjustment also can be used to increase the sensitivity of the receiver with the front control

©John F. Rider, Publisher

SEARS-ROEBUCK & CO.

MODELS 1918A,1968
Alignment

ALIGNMENT PROCEDURE

IF Alignment:

1. Turn the receiver Volume Control all the way on, the Sensitivity Control lever to the right and the lower left knob turned only far enough to switch the receiver on. Connect a wire between terminals "D" and "G" on the antenna terminal block at the rear of the chassis. Turn the wave band switch knob to the BROADCAST, "B", position.

2. Turn the Variable Selectivity and Tone Control knob all the way to the right (broadest position). Loosen the set screws holding the flexible cables that actuate the variable coupling of the IF transformers. Push the cables all the way into the tubes and retighten the set screws. Be sure the Variable Selectivity and Tone Control knob remains in its extreme clockwise position during the operation. Be careful when tightening the set screws that they are not screwed down so far that the cable wires are cut. The Variable Selectivity and Tone Control knob must be left at its sharpest position (all the way left) during all of the alignment procedure unless otherwise stated in the procedure.

3. Connect the ground lead of the test oscillator, in series with a .1 mfd condenser,to the receiver chassis. Set the test oscillator to 385 kc.

4. Connect the output lead of the test oscillator to the control grid of the 6K7MG second IF tube. This is the tube that is next to the type 75 tube. Adjust the IF output transformer for maximum output meter reading. The locations of all of the tuning adjustments are shown in the Service Illustrations. Be sure that the Volume Control of the receiver is turned all the way on during all adjustments and that the output of the test oscillator is kept at its lowest possible value.

5. Connect the output lead of the test oscillator to the control grid of the 6K7MG first IF tube and adjust the IF interstage transformer. As before, the output from the test oscillator must be kept at its lowest possible value in order to render the AVC ineffective and to insure precise alignment.

6. Connect the output lead of the test oscillator to the control grid cap of the 6A8MG oscillator-translator tube and adjust the IF input transformer for maximum output meter reading.

7. Carefully repeat operations #4, #5, and #6 for greater accuracy. As the sensitivity of the receiver is brought up by alignment, the output from the test oscillator should be decreased so that it is always kept at the lowest value that will give a satisfactory reading on the output meter.

8. Connect the output lead of the test oscillator to the control grid cap of the 6A8MG oscillator-translator tube. With the test oscillator set accurately at 385 kc and the Variable Selectivity and Tone Control all the way to the left (sharp) position, note the output meter reading. Then, turn the Variable Selectivity and Tone Control knob all the way to the right and note the output meter reading. Use as low an output from the test oscillator as is consistent with a satisfactory output meter reading. There should be little or no difference in output meter readings for the two positions of the Variable Selectivity and Tone Control knob. Any great difference indicates improper alignment or improper setting of the IF coupling control cables.

RF ALIGNMENT

Preliminary:

1. Turn the receiver Volume Control all the way on; the Sensitivity Control lever to the right and the lower left knob turned only far enough to switch the receiver on. Connect a wire between terminals "D" and "G" on the antenna terminal block at the rear of the chassis. Keep the output from the test oscillator at its lowest possible value during all of the alignment. All adjustments of trimmers should be made with the bottom chassis plate on.

Broadcast (B) Band:

1. Turn the Wave Band Switch to the "B" position. Connect the output lead of the test oscillator, in series with a .00025 mfd mica condenser, to the terminal marked, "A", on the antenna terminal block at the rear of the chassis.

2. Set the test oscillator to 1520 kc and open the variable condenser plates all the way. Adjust the broadcast oscillator trimmer condenser, C26, for maximum output meter reading.

3. Connect a .0001 mfd mica condenser from the stator of the RF section of the variable to ground. The RF section is the one second from the dial end of the condenser.

4. Set the test oscillator to 1400 kc and tune in its signal Then adjust the broadcast antenna trimmer, C7, for maximum output meter reading. This trimmer is the one on the variable condenser section nearest the dial.

5. Remove the .0001 mfd mica condenser that was used in the preceeding operation.

6. There is a "link" connection, mounted at the bottom of the Variable Selectivity control, as shown in the Service Illustration. Remove the screw and open the link connection before preceeding with the next operation, #7.

7. Leave the test oscillator at 1400 kc and tune in its signal. Then adjust the RF and translator trimmers, C8 and C16, for maximum output meter reading.

8. Close the link connection that was opened in operation #6.

9. Leave the receiver tuned accurately to 1400 kc and set the dial pointer to 1400 kc. The pointer is merely held by friction and can be moved without turning the variable condenser plates.

10. Set the test oscillator to 600 kc and tune in its signal. Then adjust the Broadcast oscillator padder, C27, for maximum output meter reading. The variable should be rocked a degree or two during the adjustment.

11. Repeat operations #2 to #10 for greater accuracy. Always keep the test oscillator at its lowest possible value and the Volume Control of the receiver on full.

Weather (A) Band:

1. Turn the Wave Band Switch to the "A" position. Leave the test oscillator connected to the receiver, as for Broadcast band alignment.

2. Set the test oscillator to 370 kc. Open the variable condenser plates all the way and adjust the oscillator trimmer, C28, for maximum output meter reading. This trimmer is mounted under the chassis, as shown in the Service Illustration.

3. Set the test oscillator to 360 kc and tune in its signal. Adjust the antenna and translator trimmers, C1 and C2, for maximum output meter reading. These trimmers are mounted under the chassis, as shown in the Service Illustration.

4. Set the test oscillator to 230 kc and adjust the oscillator padding condenser, C29, for maximum output meter reading. The variable should be rocked a degree or two during the adjustment. C29 is mounted under the chassis, as shown in the Service Illustration.

5. Repeat all of the operations in their original order to insure proper alignment.

Short Wave (C) Band:

1. Turn the Wave Band Switch to the "C" position. Remove the .00025 mfd condenser, that was used in the output lead of the test oscillator for alignment on bands "A" and "B". Connect a 400 ohm resistor in place of the .00025 mfd condenser.

2. Set the test oscillator to 4250 kc and open the variable condenser plates all the way. Then adjust the oscillator trimmer, C23, for maximum output meter reading. It may be found that two peaks can be obtained at two different settings of the trimmer. Use the one in which the trimmer is screwed further out (lesser capacity).

3. Set the test oscillator to 4000 kc and tune in its signal. Adjust the RF and translator trimmers, C5 and C15, for maximum output meter reading. The variable should be rocked a degree or two during the adjustment. If two peaks can be obtained, use the adjustment in which the trimmers are screwed further in (greater capacity).

4. Set the test oscillator to 1700 kc and tune in its signal. Adjust the oscillator padding condenser, C25, for maximum output meter reading. The variable should be rocked a degree or two during the adjustment to insure proper peaking.

5. Repeat all of the operations in their original order. Always keep the test oscillator output at its lowest possible value.

Short Wave (D) Band:

1. Leave the test oscillator connected to the receiver, as for "C" band alignment.

2. Turn the Wave Band Switch knob to the "D" position. Set the test oscillator to 10,000 kc. Open the variable condenser plates all the way and adjust the oscillator trimmer, C22, for maximum output meter reading. If two peaks can be obtained at two different settings of the trimmer, use the adjustment in which the trimmer is screwed further out (lesser capacity).

3. Set the test oscillator to 9000 kc and tune in its signal. Adjust the RF and translator trimmers, C4 and C14, for maximum output meter reading. The variable should be rocked during the adjustment. If two peaks can be obtained at two different settings of the trimmers, use the adjustment in which the trimmers are screwed further in (greater capacity).

4. Set the test oscillator to 4500 kc and tune in its signal. If necessary, shift turns on L3 and L9. If turns are shifted it will be necessary to repeat operation #3. A "Tuning Wand" is of great help in determining whether or not it is necessary to shift turns.

Short Wave (E) Band:

1. Leave the test oscillator connected as for "C" and "D" band alignment. Turn the Wave Band Switch knob to the "E" position.

2. Set the test oscillator to 19,000 kc. Open the variable condenser plates all the way and adjust the oscillator trimmer, C19, for maximum output meter reading. If two peaks can be obtained at two different settings of the trimmer, use the adjustment in which the trimmer is screwed further out (lesser capacity).

3. Set the test oscillator to 9000 kc and tune in its signal. If the dial calibration is off more than one division, shift the turns on the oscillator coil, L12, to make the dial pointer come to its correct dial reading. If it is found necessary to shift turns, operation #2 should be repeated.

4. Set the test oscillator to 17,000 kc and tune in its signal. Adjust the RF and translator trimmers, C3 and C13, for maximum output meter reading. The variable should be rocked during the adjustment. If two peaks can be obtained at two different settings of the trimmers, use the adjustment in which the trimmers are screwed further in (greater capacity).

5. Set the test oscillator to 9000 kc and adjust the turns on L2 and L8, if necessary. The use of a "Tuning Wand" is of great help in determining whether shifting of turns is necessary. If it is found necessary, operation #4 must be repeated.

©John F. Rider. Publisher

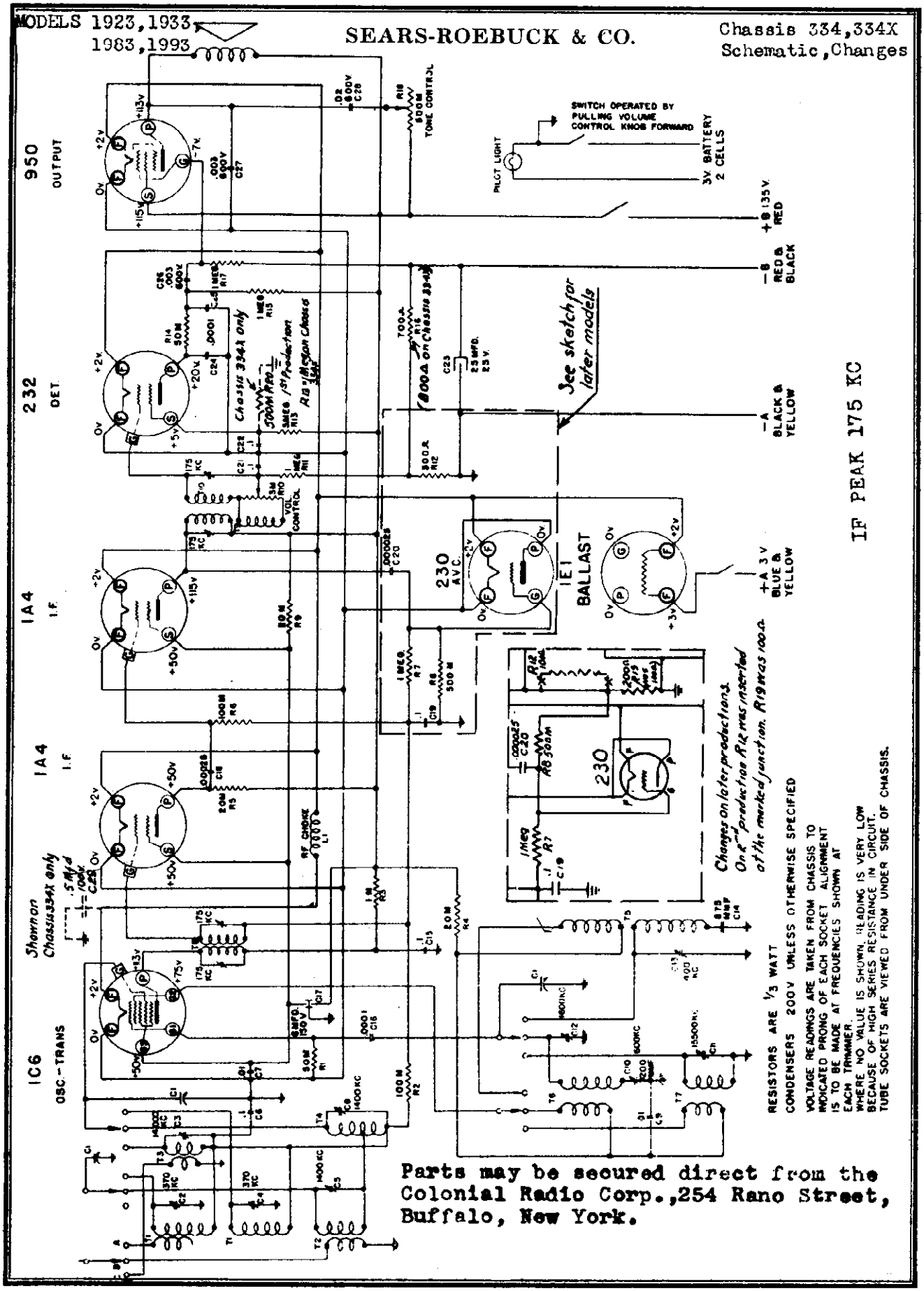

Parts may be secured direct from the Colonial Radio Corp.,254 Rano Street, Buffalo, New York.

©John F. Rider, Publisher

SEARS-ROEBUCK & CO

MODELS 1923,1933
1983,1993
Chassis 334,334X
Chassis,Alignment
Parts,Notes

SCHEMATIC LOC.PLOT	PART NO.	DESCRIPTION	PRICE
	R11603	Adapter - Dial pointer	.18
	R126384	Bracket - For dial light batteries	.17
	R129408	Bracket - Volume control, tone control, dial light switch assembly	.48
	R10582	Bushing - Rubber, station selector dial	.06
	R12546	Cable - Battery, Models 1923-1933	.19
	R12545	Cable - Battery, Models 1983-1993	.20
	R8369	Choke - RF	.26
	R7011A	Clip - Antenna and ground leads	.05
	R10043	Clip - Grid	.03
	R10670	Coil - Antenna, broadcast	.13
	R18578	Coil - Oscillator, broadcast	.13
	R10671	Coil - Translator, broadcast	.13
	R12578	Coil - Oscillator, weather band	.24
	R12579	Coil - Translator, weather band	.24
	R10681D	Coil - Oscillator, short wave	.20
	R10681C	Coil - Translator, short wave	.24
	R12352	Condenser - Variable	3.01
	R12362A	Condenser - Variable, with drive assembly	6.08
C17,C23	R12117	Condenser - Electrolytic block	1.78
C10	R9426	Condenser - Padding	.29
C2	R10197	Condenser - Trimmer	.18
C3,C6,C11	R18581	Condenser - Trimmer	.18
C4,C5,C13	R18415	Condenser - Trimmer	.18
C8,C12	R9444	Condenser - .1 mfd. 600 volts	.16
C15,C19,C22, C24	R9761	Condenser - .02 mfd. 400 volts	.14
C9	R9421	Condenser - .01 mfd. 600 volts	.13
C7,C9	R9422	Condenser - .005 mfd. 600 volts	.13
C20,C27	R18580	Condenser - .000875 mfd. 600 volts	.13
C26	R4598	Condenser - .00082 mfd. mica	.14
C28,C24,	R4595	Condenser - .0001 mfd. mica	.13
C25			
C29	R9711	Condenser - .000085 mfd. mica	.16
C30	R18577	Control - Tone	.42
R20	R18571	Control - Volume	.47
	R18583	Lamp - Dial light	.11
	R126554	Lead - Antenna	.13
	R126556A	Lead - Ground	.13
R13	R6805	Resistor - 6 megohms, 1/3 watt carbon	.16
R7,R11	R7535	Resistor - 1 megohm, 1/3 watt carbon	.17
R15,R17			
R6	R7528	Resistor - 500M ohms, 1/3 watt carbon	.15
R2,R8	R7566	Resistor - 100M ohms, 1/3 watt carbon	.17
R1,R14	R6537	Resistor - 50M ohms, 1/3 watt carbon	.15
R4,R5,R9	R6540	Resistor - 25M ohms, 1/3 watt carbon	.15
R16	R6546	Resistor - 10M ohms, 1/3 watt carbon	.15
R25	R6547	Resistor - 700 ohms, 1/3 watt carbon	.15
R18	R10621	Resistor - 300 ohms, 1/3 watt carbon	.15
	R18468	Ring - Glass clamping	.08
	R6424	Ring - Retaining, wave switch shaft	.01
	R126514	Shaft - Dial drive assembly	.32
	R12273	Shaft - Wave switch actuating	.08
	R8366	Shield - Tube, base	.06
	R10440	Shield - Tube, top	.06
	R10441	Shield - Tube, cap	.06
	R10654	Shield - Coil, base	.10
	R10653	Shield - Coil, top	.10
	R7631	Socket - Pilot light	.06
	R8251	Socket - 4 prong	.06
	R8252	Socket - 5 prong	.07
	R8092	Socket - 6 prong	.08
	R11046	Spacer - Wood, shipping	.01
	3103280	Speaker - 6½", Models 1923-1983	4.33
	3103873	Speaker - 6½", Models 1933-1993	4.98
	R18443	Switch - Filament	.43
	R12409	Switch - Wave	1.04
	R126494	Transformer - RF Input	1.21
	R12547	Transformer - IF Output, Primary	.77
	R12548	Transformer - IF Output, Secondary	.77
	R9794	Washer - Insulating, filament switch mounting	.06

The additions to the Replacement Parts List are:

SCHEMATIC LOCATION	PART NO.	DESCRIPTION	PRICE
	R14003	Choke - RF	.25
I1	R12527	Condenser - .4 mfd. 100 volts	.42
C29	R14005	Leaflet - Instruction	.03
	R13789	Leaflet - Weather Band	.11

PARTS ARE SUBJECT TO CHANGE WITHOUT NOTICE

[Circuit Description:

These SILVERTONE Models are 7 tube, battery powered superheterodynes, having a "MARINER" or long wave range; a broadcast range; and a short wave range. A filament Ballast tube is used to maintain the filament voltage at its proper value when the receiver is supplied by a 3 volt "A" block or an air cell. If a 2 volt storage battery is to be used, the Ballast tube should be replaced by a 4 prong plug having its filament prongs connected together.

The AVC Circuit:

The 230 AVC tube is used as a diode with its plate connected to one side of the filament. The usual grid leak and condenser combination is used to apply the signal to the tube through C20. The resulting direct current flowing through R8, creates a voltage drop which is applied to the control grids of the 125 and 1A4 tubes to secure AVC.

1. Connect the output meter across the chassis and the control grid of the 106. A .1 mfd. condenser should be connected in series with one of the test oscillator leads.

2. Turn the volume control of the receiver full "on" and put the tone control in its "brilliant" position. Then adjust the IF output stage for maximum output. The tuning adjustment for the primary of this stage (T9) is accessible from the rear of the chassis. The secondary, T10, is the single adjustment unit mounted on top of the chassis. The output from the test oscillator must be kept at its lowest possible value.

ALIGNMENT PROCEDURE

The IF Stages:

3. Adjust the IF input transformer to secure maximum deflection on the output meter.

4. Repeat the output stage adjustments and then the input stage adjustments for greater accuracy. Always keep the test oscillator at its lowest possible value and the volume control of the receiver at its full "on" position.

RF Alignment: Band A:

1. Loosely couple the test oscillator to the antenna of the receiver, leaving the antenna connected. The volume control of the receiver should be in its full "on" position and the tone control in its "brilliant" position.

2. Set the test oscillator to 600 kc and open the variable condenser plates all the way. Then adjust C13 for maximum output. The locations of the trimmers are shown in the Service Diagrams.

3. Set the test oscillator to 370 kc and tune in its signal. Then adjust C6 and C4 for maximum output. The variable should be rocked back and forth a degree or two while making this adjustment. Always keep the test oscillator output at its lowest possible value.

4. Repeat the 600 kc adjustment and then the 370 adjustments to secure greater accuracy.

RF Alignment: Band B:

1. Leave the test oscillator coupled to the antenna lead; the volume control on full; and the tone control in its "brilliant" position, as for Band A.

2. Set the test oscillator to 1600 kc. Open the variable condenser plates all the way and adjust C8 for maximum output.

3. Set the test oscillator to 1400 kc and adjust C5 for maximum output. The variable should be rocked back and forth during this adjustment.

4. Set the test oscillator to 600 kc and tune in its signal. Then adjust C10 for maximum output. The variable should be rocked during the adjustment.

5. Repeat the 1600 kc adjustment, then the 1400 kc adjustment, and then the 600 kc adjustment for greater accuracy. Always keep the test oscillator at its lowest possible value.

NOTE. T2, T4, T8, T10, C5, C8, C17, & C23 ARE MOUNTED ON TOP OF CHASSIS. Only for 1st Production

RF Alignment: Band C:

1. Leave the test oscillator loosely coupled to the antenna lead; the volume control on full; the tone control in its "brilliant" position, as for alignment on the other bands.

2. Set the test oscillator to 15,500 kc. Open the variable condenser plates all the way and adjust C11 for maximum output.

3. Set the test oscillator to 14,000 kc and tune in its signal. Then adjust C4 for maximum output. The variable should be rocked during the adjustment.

4. Repeat the 15,500 kc and 14,000 kc adjustments for greater accuracy. Always keep the test oscillator at its lowest possible value.

Occasionally, a set is found in which the condenser-drive gears do not mesh properly. To correct this, proceed as follows:

Remove the dial pointer, the Station Selector dial, and the metal tuning-drive gear. Then, adjust that remote the full condenser gear, by slightly loosening its two mounting screws and shifting the bracket until proper meshing of the gears is secured. Then re-assemble the dial and pointers. Correct dial calibration can be secured either by tuning in a station of known frequency and setting the pointer to that frequency, or by fully meshing the condenser plates and putting the dial pointer horizontal.

©John F. Rider, Publisher

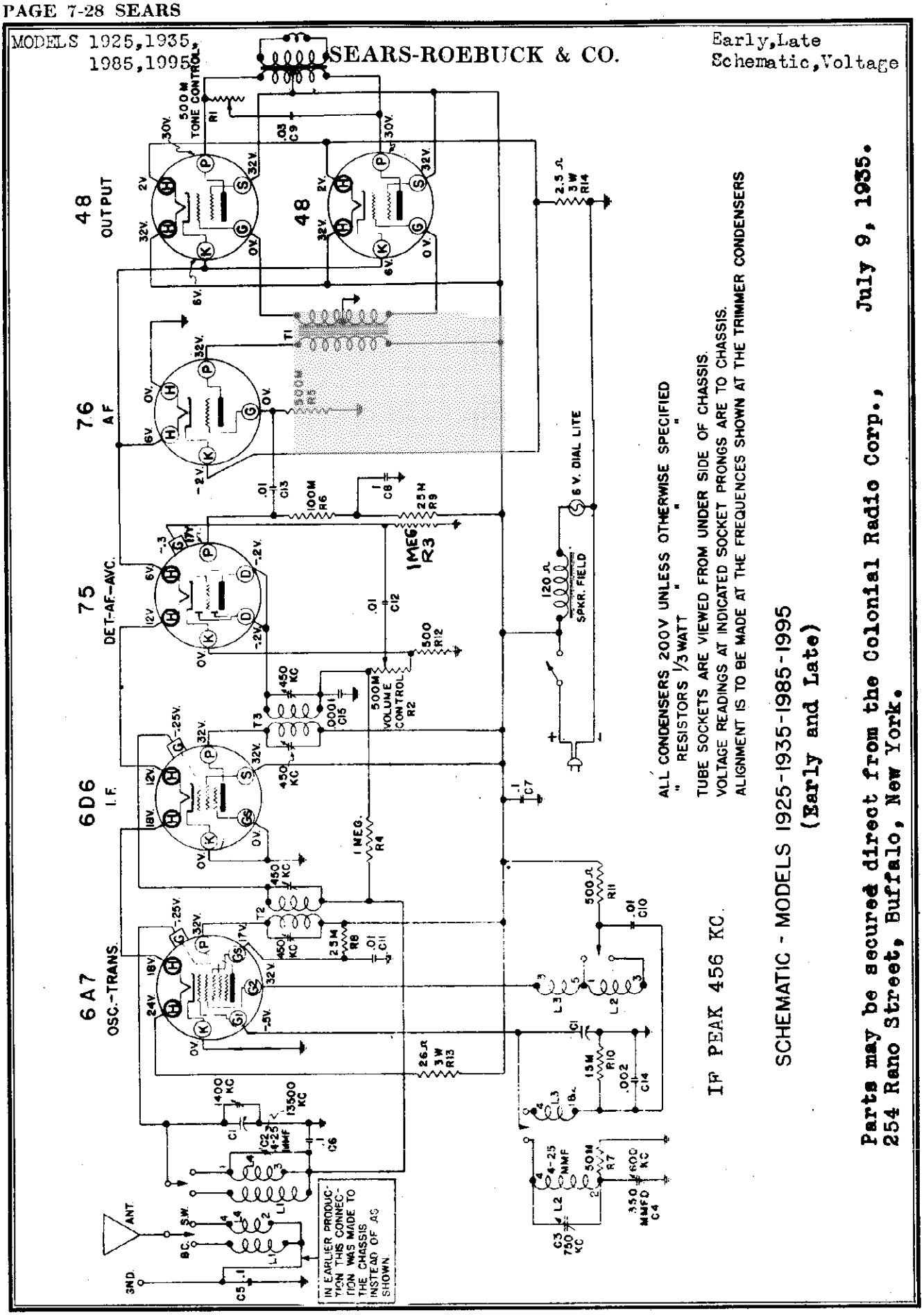

©John F. Rider, Publisher

MODELS 1925,1935,1985,1995

SEARS-ROEBUCK & CO. Chassis,Alignment,Notes

Because of the low voltage at which these models are operated, more than usual care must be used in selecting 6A7 and 75 tubes that will operate properly on the short wave band. This will be particularly true for installations where the line voltage is lower than average. Tubes which do not operate properly in these models may be entirely satisfactory for use in other sets operating at a higher voltage.

General:

During all of the alignment procedure, the tone control and the volume control must be turned all the way to the right. The ground lead of the test oscillator should be connected to the chassis through a .1 mfd. condenser. The other lead of the test oscillator is to be connected to the grid clip of the proper tube as described in the procedure. It is important to leave the grid clip attached to the clip and to leave the tube shields in place. The oscillator tube of the receiver also should be in its socket. In the case of 6A7 oscillator-translators, no attempt should be made to "kill" the oscillator section.

The output from the test oscillator should always be kept at the lowest possible value and the coupling between it and the receiver should be made as loose as possible. In the case of RF alignment, where the test oscillator is coupled to the antenna lead of the receiver, alignment will be most accurate if the coupling to the antenna is made very loose. (The antenna has a variable control for its power output, it is better to turn this control to its high position and then decrease the signal input to the receiver by decreasing the amount of coupling between the test oscillator and the receiver's antenna lead.

IF Alignment:

1. Connect the test oscillator lead to the control grid of the 6D6 tube. Set the test oscillator to 456 kc and tune the IF output transformer, T3.
2. Change the test oscillator connection to the control grid of the 6A7 tube and tune the IF input transformer, T2.
3. Repeat the IF output transformer adjustment and then the IF input transformer adjustment.

Broadcast RF Alignment:

1. Loosely couple the output of the test oscillator to the antenna lead of the receiver, leaving the antenna connected.
2. Set the test oscillator to 600 kc and adjust the broadcast oscillator padding condenser, C4, for maximum output. The variable condenser should be continuously rocked back and forth a degree or two while the padder is being adjusted.
3. Set the test oscillator to 1720 kc. Open the variable condenser plates all the way and adjust C3 for maximum output.
4. Set the test oscillator to 1400 kc and tune in its signal. Then adjust the trimmer on the variable condenser for maximum output. The variable should be rocked back and forth a degree or two while the trimmer is being adjusted.
5. Repeat the 600 kc oscillator padder condenser adjustment to secure greater accuracy.
6. Repeat the 1720 kc and the 1400 kc adjustments for greater accuracy.

Short Wave RF Alignment:

1. Leave the test oscillator loosely coupled to the antenna lead as for broadcast RF alignment.
2. Set the test oscillator to 14,500 kc and tune in its signal. Then adjust C2 for maximum output. The variable should be rocked a degree or two during the adjustment to insure most accurate peaking. Two peaks may be found, one of them with the trimmer screwed out further than the other. The correct setting is the one with the trimmer screwed further in, (greater capacity).

Tube Voltages:

The proper voltage reading to be obtained from each of the tube prongs to chassis is indicated on the schematic, immediately alongside of the respective tube prong.

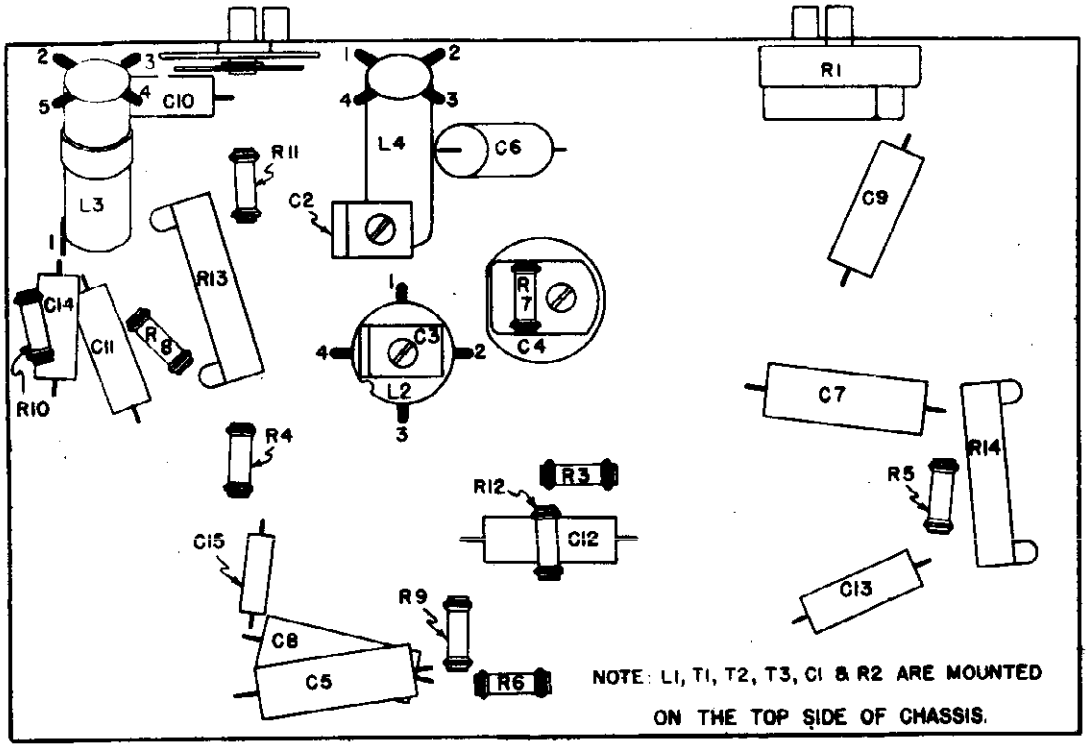

©John F. Rider, Publisher

MODELS 1926,1928,1978,1980A
Early and Late
Schematic,Voltage

SEARS-ROEBUCK & CO.

Parts may be secured direct from the Colonial Radio Corp 254 Rano Street, Buffalo, New York.

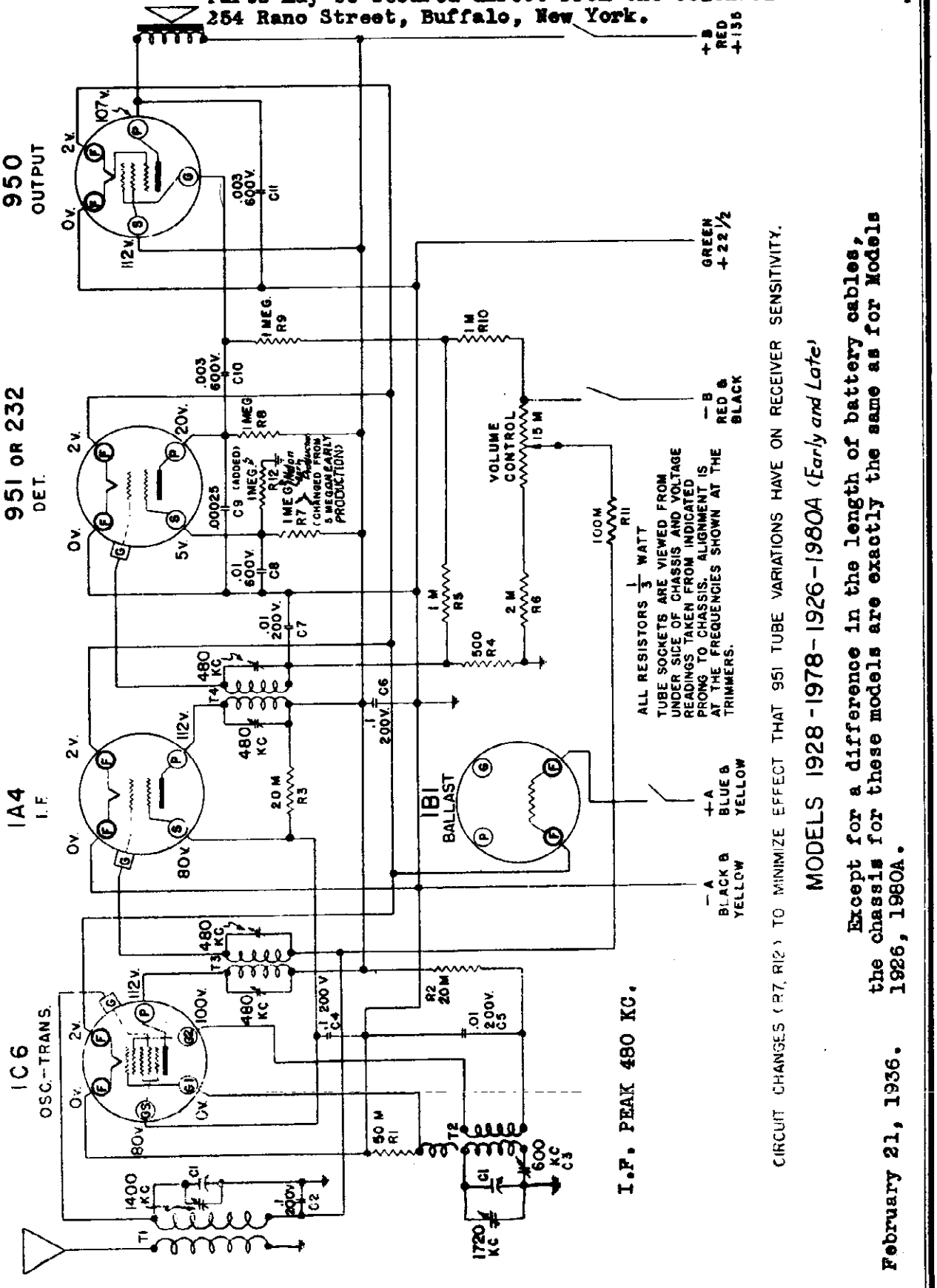

CIRCUIT CHANGES (R7, R12) TO MINIMIZE EFFECT THAT 951 TUBE VARIATIONS HAVE ON RECEIVER SENSITIVITY.

MODELS 1928-1978-1926-1980A *(Early and Late)*

Except for a difference in the length of battery cables, the chassis for these models are exactly the same as for Models 1926, 1980A.

February 21, 1936.

SEARS-ROEBUCK & CO.

MODELS 1927X, 1937X
Schematic, Voltage
Trimmers

Parts may be secured direct from the Sentinel Radio Corp., 2222 Diversey Parkway, Chicago, Illinois.

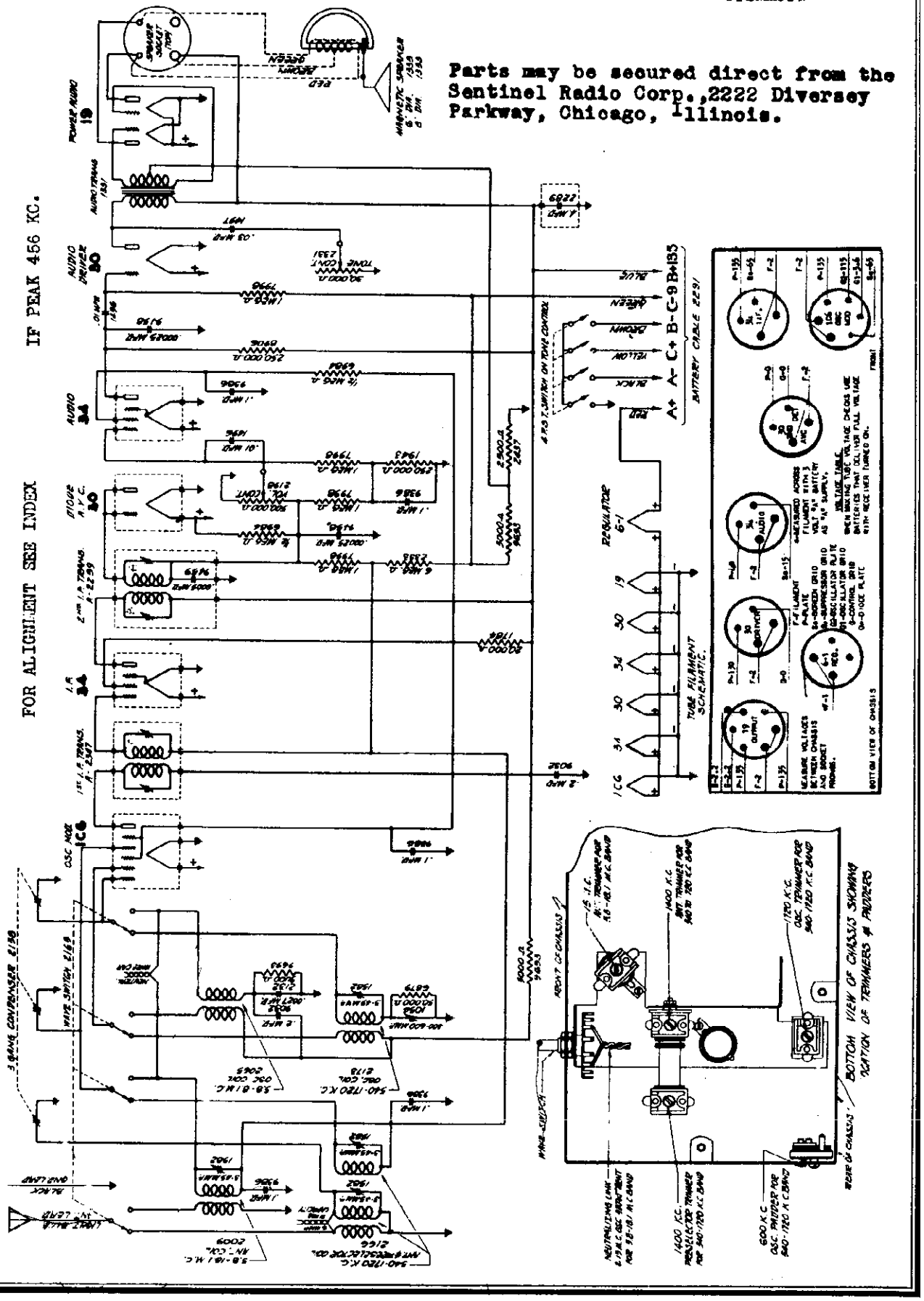

©John F. Rider, Publisher

MODELS 1930,1940,1956,1970A
Schematic

SEARS-ROEBUCK & CO.

Parts may be secured direct from Echophone Radio Corp., 2611 Indiana Avenue, Chicago, Illinois.

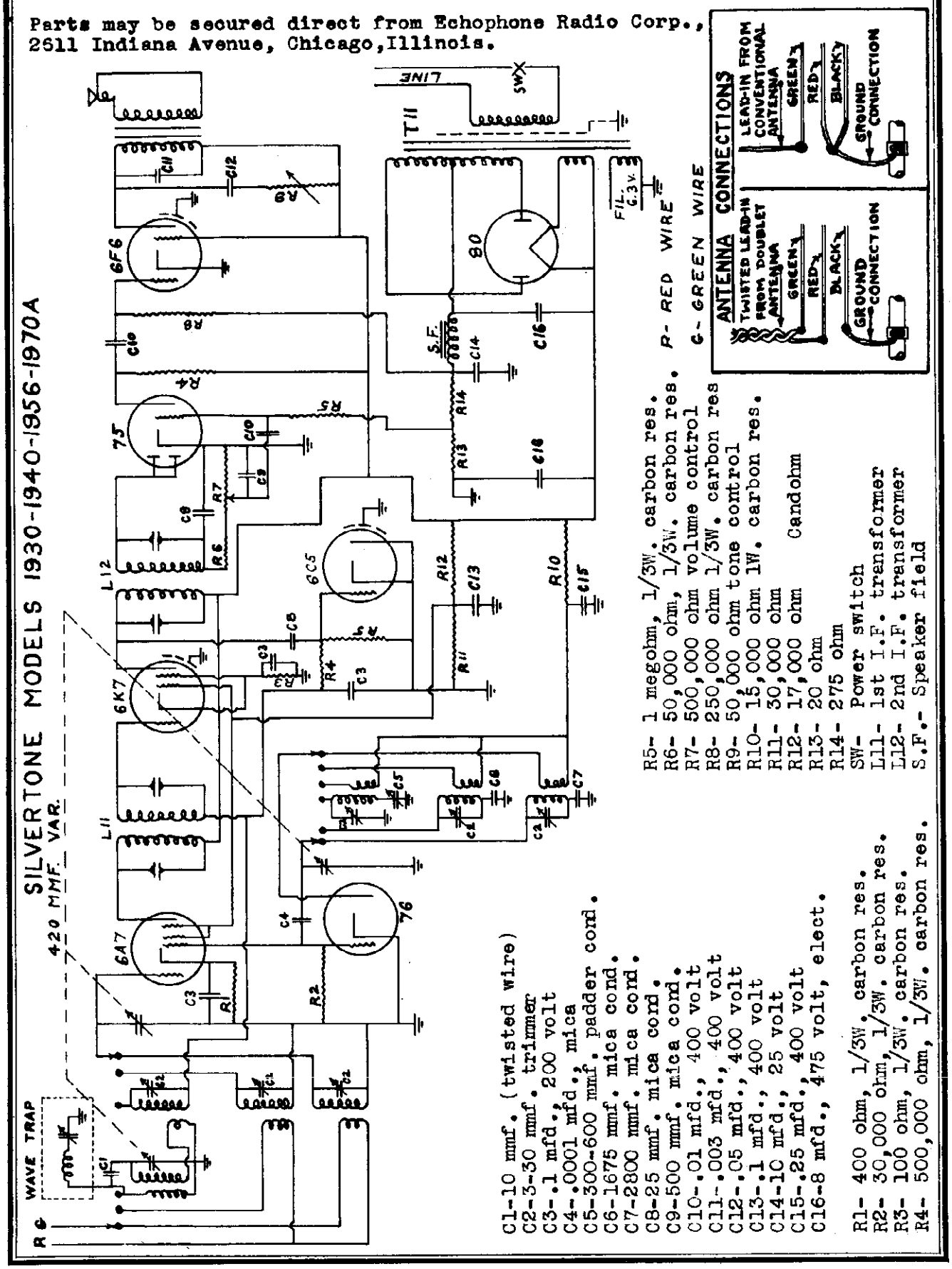

C1-10 mmf. (twisted wire)
C2-3-30 mmf. trimmer
C3-.1 mfd., 200 volt
C4-.0001 mfd., mica
C5-300-600 mmf. padder cond.
C6-1675 mmf. mica cond.
C7-2800 mmf. mica cond.
C8-25 mmf. mica cond.
C9-500 mmf. mica cond.
C10-.01 mfd., 400 volt
C11-.003 mfd., 400 volt
C12-.05 mfd., 400 volt
C13-.1 mfd., 400 volt
C14-10 mfd., 25 volt
C15-.25 mfd., 400 volt
C16-8 mfd., 475 volt, elect.

R1- 400 ohm, 1/3W. carbon res.
R2- 30,000 ohm, 1/3W. carbon res.
R3- 100 ohm, 1/3W. carbon res.
R4- 500,000 ohm, 1/3W. carbon res.
R5- 1 megohm, 1/3W. carbon res.
R6- 50,000 ohm, 1/3W. carbon res.
R7- 500,000 ohm volume control
R8- 250,000 ohm 1/3W. carbon res
R9- 50,000 ohm tone control
R10- 15,000 ohm 1W. carbon res.
R11- 30,000 ohm
R12- 17,000 ohm Candohm
R13- 20 ohm
R14- 275 ohm
SW- Power switch
L11- 1st I.F. transformer
L12- 2nd I.F. transformer
S.F.- Speaker field

©John F. Rider, Publisher

SEARS-ROEBUCK & CO.

MODELS 1933, 1983A
Schematic, Voltage

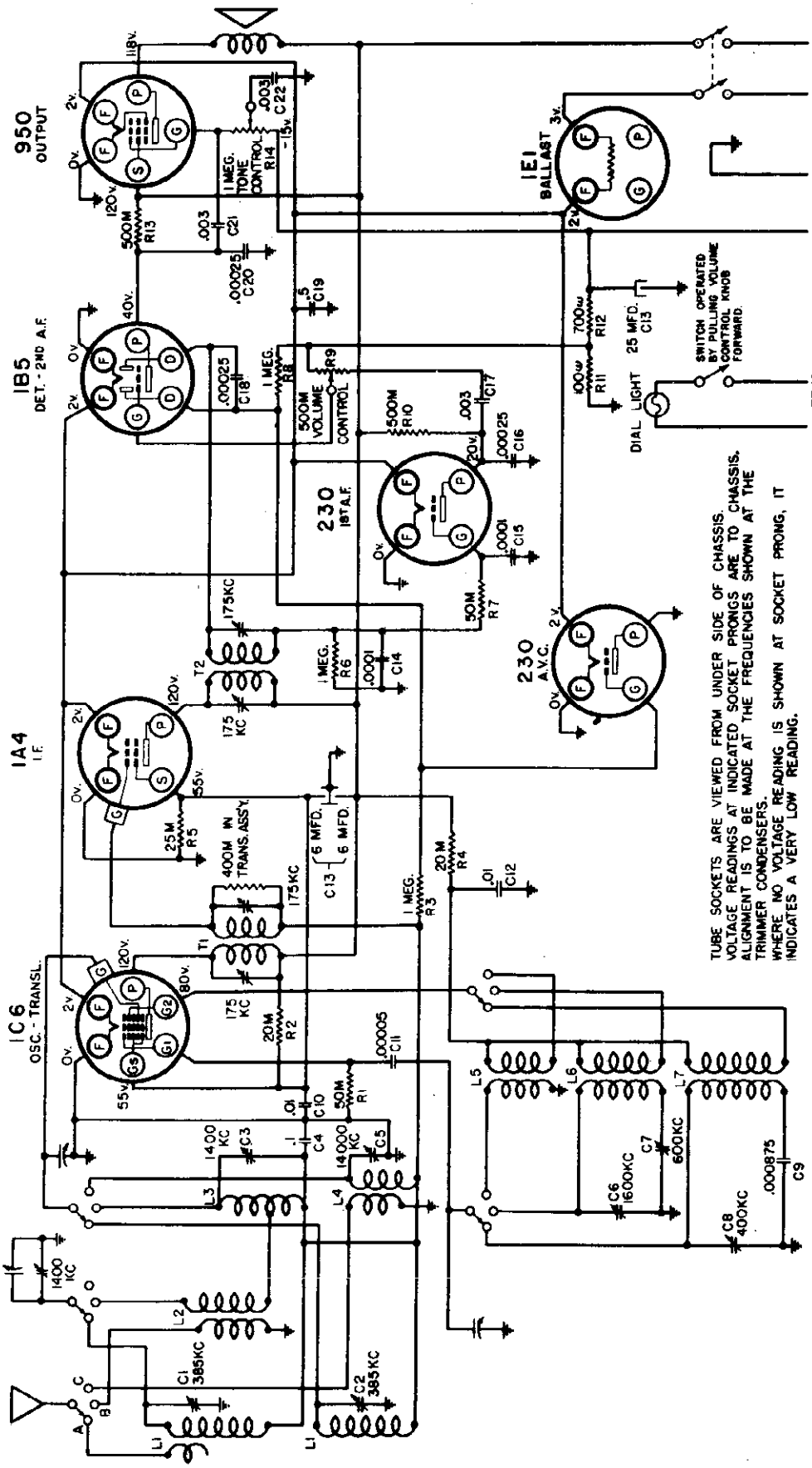

©John F. Rider, Publisher

MODELS 1933A,1983A
Chassis,Alignment
Sensitivity

SEARS-ROEBUCK & CO.

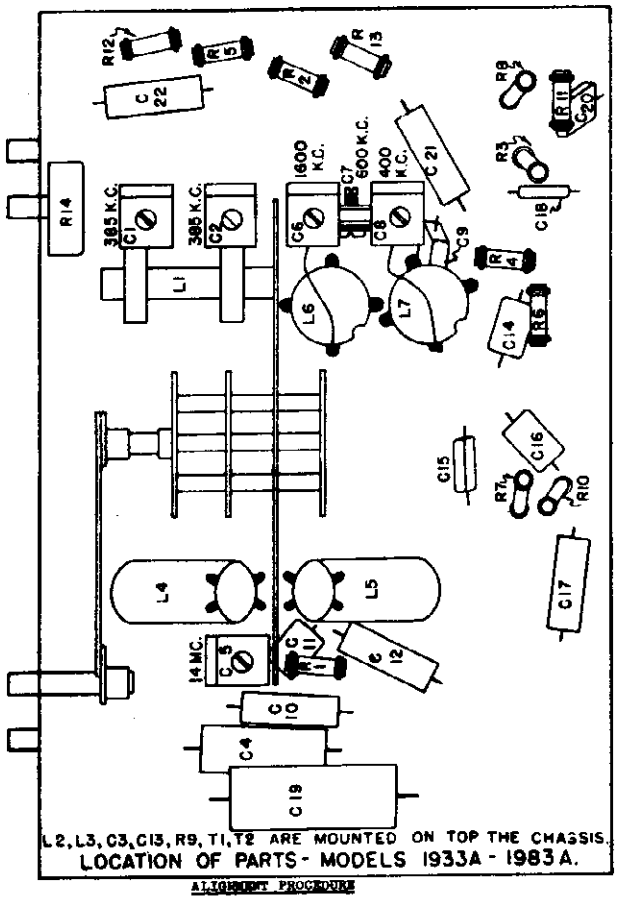

L2,L3,C3,C13,R9,T1,T2 ARE MOUNTED ON TOP THE CHASSIS.
LOCATION OF PARTS - MODELS 1933A - 1983A.

ALIGNMENT PROCEDURE

IF ALIGNMENT

1. Connections:

Connect the ground lead of the test oscillator to the receiver chassis. Connect the output lead of the test oscillator, in series with a .1 mfd condenser, to the tube grid caps indicated below under ALIGNMENT. Connect the output meter, in series with a .5 mfd condenser across the loud speaker terminals. The meter should be switched to a scale of approximately 10 volts.

2. Receiver Settings:

Turn the Wave Band switch to the BROADCAST position and the Station Selector to about 550 kc. Turn the receiver Volume Control all the way on, and the Tone Control to its brilliant position (clockwise)

3. Alignment:

(a) Set the test oscillator to 175 kc. Connect its output (through the .1 mfd condenser) to the control grid of the 1A4 tube. Peak the IF output transformer, T2.

(b) Change the test oscillator output connection to the control grid cap of the 1C6 tube. Peak the IF input transformer, T1.

(c) Change the test oscillator output connection back to the control grid cap of the 1A4 tube and repeat the T2 adjustment. Then change the test oscillator output connection to the 1C6 tube again and repeat the T1 adjustment for greater accuracy. Always keep the test oscillator output at its lowest possible value and the receiver Volume Control all the way on.

RF ALIGNMENT

Important:

The Broadcast band must be aligned before the Weather band or the Short Wave band.

BROADCAST (B) BAND ALIGNMENT

1. Connections:

Connections for Broadcast band alignment are the same as for IF alignment except that the .1 mfd condenser is disconnected from the output lead of the test oscillator. In its place a .0002 mfd mica condenser is connected from the test oscillator output lead to the green antenna lead on the chassis.

2. Receiver Settings:

Turn the Volume Control all the way on, the Tone Control all the way to the right, and the Wave Band switch to the BROADCAST (B) position.

3. Alignment:

(a) Set the test oscillator to 1600 kc. Open the variable condenser plates all the way and peak the broadcast oscillator trimmer, C8. The locations of the trimmers are shown in the Service Illustration.

(b) Set the test oscillator to 1400 kc and tune in its signal. Then peak the antenna trimmer and the translator trimmer, C3. The antenna trimmer is the one on the variable condenser section nearest the dial. The translator trimmer is accessible through the hole in the top of the translator shield can mounted on top of the chassis next to the 1C6 tube.

(c) Set the test oscillator to 600 kc and tune in its signal. Then peak the broadcast oscillator padder, C7. The variable should be rocked a degree or two during the adjustment.

(d) Repeat the 1600 kc adjustment, then the 1400 kc adjustments, and then the 600 kc adjustment for greater accuracy. Always keep the test oscillator output at its lowest possible value.

WEATHER (A) BAND ALIGNMENT

1. Connections:

All connections remain the same as for Broadcast band alignment.

2. Receiver Settings:

Turn the Wave Band switch to the "A" position. All other settings remain the same as for Broadcast band alignment.

3. Alignment:

(a) Set the test oscillator to 400 kc. Open the variable condenser plates all the way and peak the oscillator trimmer, C8.

(b) Set the test oscillator to 385 kc and tune in its signal. Peak the antenna trimmer, C1, and the translator trimmer, C2.

(c) Repeat the 400 kc adjustment and then the 385 kc adjustments for greater accuracy.

SHORT WAVE (C) BAND ALIGNMENT

Note: The oscillator frequency on this band is 175 kc lower than the translator frequency, instead of being 175 kc higher, as is usual.

1. Connections:

Remove the .0002 mfd condenser used in series with the output lead of the test oscillator for alignment on the other two bands. Replace this condenser with a 400 ohm carbon resistor.

2. Receiver Settings:

Turn the Wave Band switch to the "C" position. Other receiver settings remain the same as for previous alignment.

3. Alignment:

(a) The top frequency for this band must not go higher than 16,000 kc. This is governed entirely by positioning of the leads. If the top frequency is allowed to go higher than 16,000 kc, the calibration for the band will be incorrect. Check the top frequency by opening the variable condenser plates all the way, setting the test oscillator to 16,000 kc, and positioning leads so that a peak reading is had on the output meter.

(b) Set the test oscillator to 14,000 kc and tune in its signal Peak the translator trimmer, C5.

SENSITIVITIES

The figures in the following chart, although approximate, will serve as an indication of the sensitivities that should be had at various points in the receiver and at various frequency settings. They will be useful for trouble shooting. It is necessary to have a test oscillator with an accurately calibrated attenuator so that its output power can be known. The figures in the last column represent the output voltage from the test oscillator necessary to secure an output meter reading of 8½ volts, with a .5 mfd condenser in series with the meter. The meter should have a resistance of 4000 ohms or more.

The Wave Band switch must be turned to the BROADCAST position and the variable Condenser to about 550 kc for the measurements at 175 kc.

The value of condenser or resistor shown in the second column of the chart must be connected in series with the test oscillator output lead.

The receiver Volume Control must be turned all the way on and the Tone Control all the way to the right for all measurements.

Test Oscillator Connected To:	Dummy Antenna In Test Oscillator Output Lead	Frequency	Microvolts Input
1C6 - Grid Cap	.1 mfd	175 kc	65
1A4 - Grid Cap	.1 mfd	175 kc	4000
1C6 - Grid Cap	.1 mfd	1000 kc	90
Stator, Var. Cond. Section nearest dial	.1 mfd	1000 kc	200
Antenna Lead	.0002 mfd	600 kc	35
Antenna Lead	.0002 mfd	1000 kc	40
Antenna Lead	.0002 mfd	1400 kc	60
Antenna Lead	.0002 mfd	225 kc	125
Antenna Lead	.0002 mfd	385 kc	35
Antenna Lead	.0002 mfd	400 kc	30
Antenna Lead	400 ohms	6000 kc	55
Antenna Lead	400 ohms	10000 kc	20
Antenna Lead	400 ohms	14000 kc	25

©John F. Rider, Publisher

SEARS-ROEBUCK & CO.

MODELS 1936,1996
Early,Chassis 359
Late,Chassis 359X
Schematic,Voltage

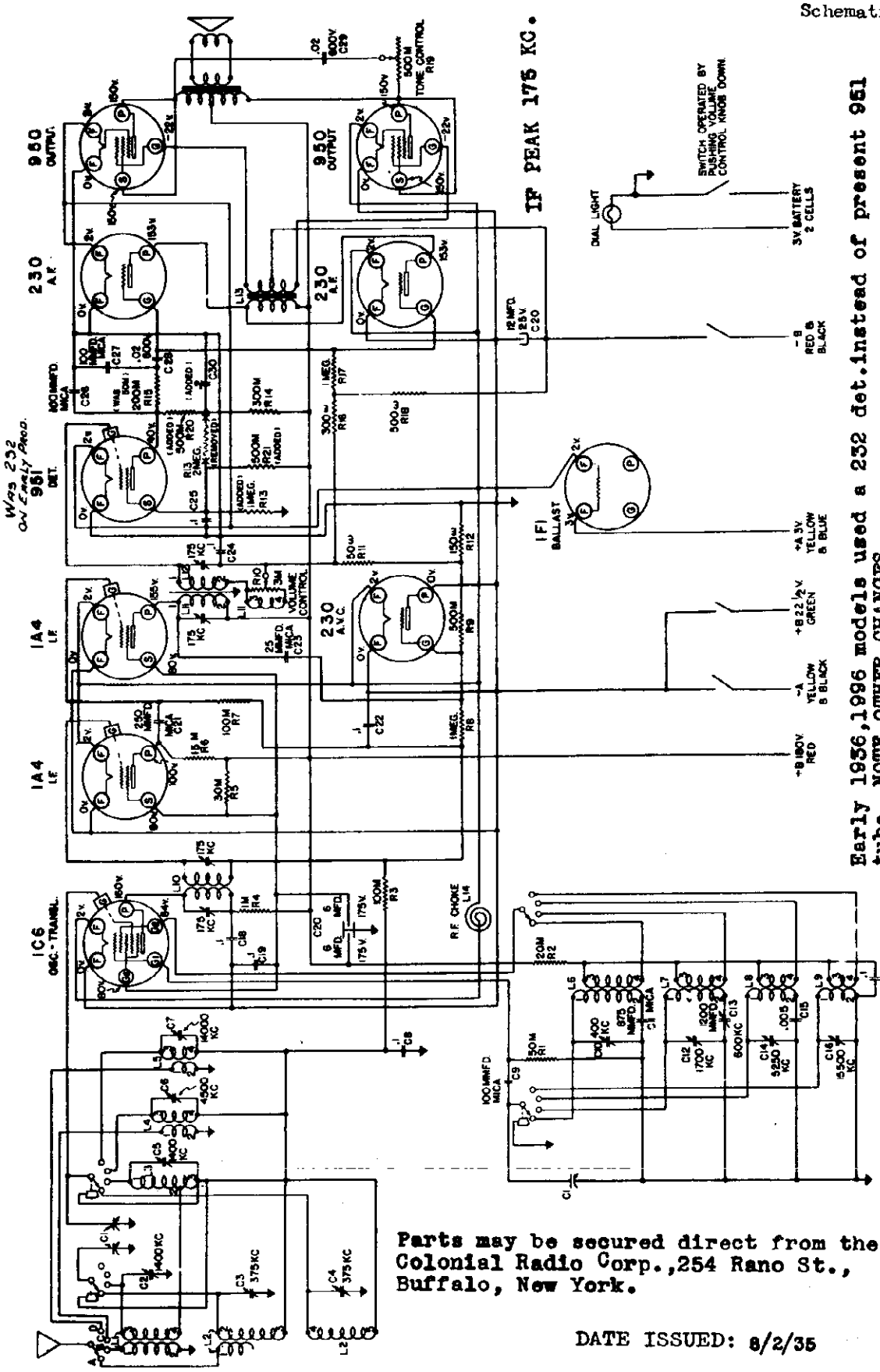

Parts may be secured direct from the Colonial Radio Corp.,254 Rano St., Buffalo, New York.

DATE ISSUED: 8/2/35

ALL RESISTORS ½ WATT.
ALL CONDENSERS 200V UNLESS OTHERWISE SPECIFIED.
TUBE SOCKETS ARE VIEWED FROM UNDER SIDE OF CHASSIS.
VOLTAGE READINGS ARE FROM CHASSIS TO INDICATED TUBE PRONG.
WHERE NO VALUE IS SHOWN, READING IS VERY LOW BECAUSE OF HIGH SERIES RESISTANCE IN CIRCUIT.
ALIGNMENT IS TO BE MADE AT FREQUENCIES INDICATED ALONGSIDE OF TRIMMERS.

© John F. Rider, Publisher

©John F. Rider, Publisher

SILVERTONE MODELS 1936, 1996

CIRCUIT CHANGES (359X CHASSIS) TO MINIMIZE SENSITIVITY VARIATIONS DUE TO VARIATIONS IN 961 TUBES

APRIL 7, 1936

Circuit changes were incorporated in later production and the chassis designation changed to 359X (marked on the license stickers and on back of the chassis). These circuit changes are for the purpose of minimizing the effect that variations in type 961 tubes have on the uniformity of receiver sensitivity in production. It is not necessary to attempt to make these changes on earlier production receivers in the field.

As shown in the attached schematic, the circuit changes are:

R15 changed from 50M ohms to 200M ohms
.2 mfd condenser, C30, added
500M ohm resistor, R20, added
1 megohm resistor, R19, added
500M ohm resistor, R21, added
2 megohm resistor, original R15, previously connected from detector screen to B plus, removed from circuit

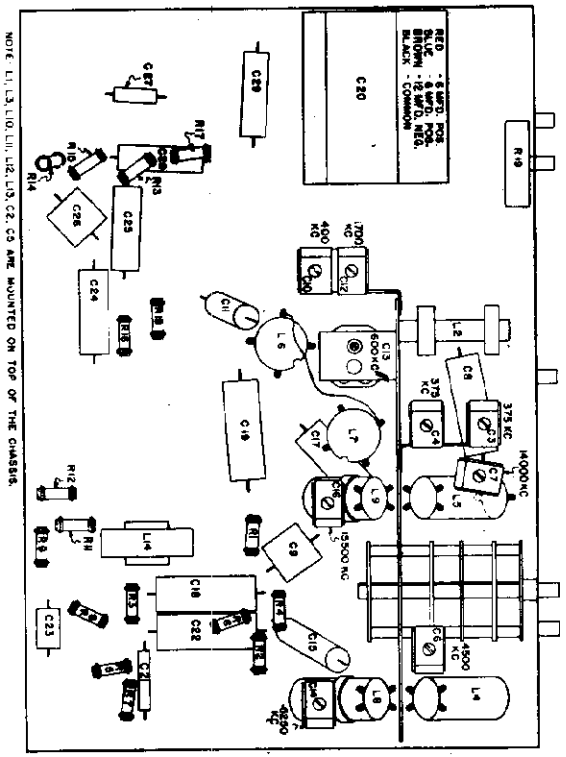

LOCATIONS OF PARTS - MODELS 1936-1996 (EARLY)

ALIGNMENT PROCEDURE

General:

During all of the alignment procedure, the tone control and the volume control must be turned all the way to the right. The ground lead of the test oscillator should be connected to the chassis through a .1 mfd. condenser. The other lead of the test oscillator is to be connected in the manner described in the procedure. Where connection is made to a control grid cap, it is important to leave the grid clip attached to the grid cap and to leave the tube shields in place. No attempt should be made to "kill" the oscillator section of the 106 during the alignment.

The output from the test oscillator always should be kept at the lowest possible value that will give a satisfactory output meter reading and the coupling between the test oscillator and the receiver should be made as loose as possible. In the case of RF alignment on any of the bands, where the test oscillator is coupled to the antenna lead of the receiver with an antenna connected, alignment will be most accurate if the coupling to the antenna lead is made very loose. (The antenna lead and the oscillator lead separated.) If the test oscillator has a variable control for its power output, it is better to turn this control to its high position and then decrease the signal input to the receiver by decreasing the amount of coupling between the test oscillator and the receiver's antenna lead. If an actual antenna is not used and is replaced by a condenser or resistor, as described in the procedure, the input to the receiver should be kept low by decreasing its power output from the test oscillator.

When peaking the antenna and translator trimmers, for all wave bands, the variable condenser should be "rocked" back and forth a degree or two while the trimmer is being adjusted. This should not be done when peaking the oscillator trimmers; in this case, the variable condenser is turned so that the plates are completely out of mesh and left in this position during the adjustment. When adjusting the oscillator trimmers, if it is found that two peaks can be obtained, use the one in which the trimmer is screwed further out (less capacity). When adjusting the antenna and translator trimmers, if two peaks are found, use the adjustment in which the trimmer is screwed in furthest. Note that this is exactly opposite to the procedure for the oscillator trimmers.

IF Alignment:

1. Connect the test oscillator lead, in series with a .00025 mfd. condenser, to the control grid of the 106 tube. Turn the wave switch to position, "B". With the test oscillator set at 176 kc peak the IF output transformer, L11, L12, and then the IF input transformer, L10. L10 is the square can unit mounted at the right hand end of the chassis. L11 is the round can unit mounted behind the variable condenser and which does not have a grid lead. L12 is the other round can unit with a grid lead.

2. Repeat the IF adjustments in the same order as mentioned in (1). As the output meter reading is increased by aligning, the test oscillator power should be decreased. This will prevent the AVC action from interfering with accurate alignment.

RF Alignment, Band A:

1. Loosely couple the output of the test oscillator to the antenna lead of the receiver, leaving the antenna connected. If it is impractical to use an actual antenna, it can be duplicated by connecting the test oscillator lead to the receiver's antenna lead, in series with a .00025 mfd. condenser.

2. Turn the wave switch to Band A. Set the test oscillator to 400 kc and couple it to the antenna lead of the receiver by either of the two methods mentioned in the preceding paragraph.

3. Open the variable condenser plates all the way and adjust the oscillator trimmer, C10, for maximum output. Trimmer condenser locations are shown in the Location of Parts Diagram.

4. Set the test oscillator to 375 kc and tune in its signal. Then peak the antenna and translator trimmers, C3 and C4. The variable should be "rocked" during the adjustment, as described in the third paragraph of General Alignment Information.

RF Alignment, Band B:

1. Couple the test oscillator to the antenna lead of the receiver with the antenna connected, or connect the oscillator directly to the receiver antenna lead, in series with a .00025 mfd. condenser, as mentioned in (1) under "RF Alignment, Band A".

2. Set the test oscillator to 1700 kc. Open the variable condenser plates all the way and peak the oscillator trimmer, C12.

3. Set the test oscillator to 1400 kc and tune in its signal. Then adjust the antenna and translator trimmers, C2 and C5. C2 is contained in the round can immediately alongside of the variable condenser. C5 is contained in the round can unit mounted behind the "On-Off" switch.

4. Set the test oscillator to 600 kc and tune in its signal. Then adjust the padder condenser, C13, for maximum output. The variable should be continuously "rocked" a degree or two while making the padder condenser adjustment.

5. Repeat the 1700 kc and then the 1400 kc adjustments.

RF Alignment, Band C:

1. Loosely couple the test oscillator lead to the antenna lead of the receiver, leaving the antenna connected. If it is impractical to use an actual antenna, the test oscillator can be connected directly to the antenna lead of the receiver, in series with a 400 ohm resistor and with no antenna connected to the receiver.

2. Set the test oscillator to 5250 kc. Turn the wave switch to Band C, open the variable condenser plates all the way and peak the oscillator trimmer, C14.

3. Set the test oscillator to 4500 kc and tune in its signal. Then peak the translator trimmer, C6.

4. Substitute a .00025 mfd. condenser for the 400 ohm resistor in the test oscillator lead. Set the test oscillator to 1700 kc and tune in its signal. If necessary, shift turns on the translator coil, L4.

5. Repeat the entire procedure for greater accuracy.

RF Alignment, Band D:

1. Loosely couple the test oscillator lead to the antenna lead of the receiver, leaving the antenna connected or else connect the test oscillator directly to the antenna lead of the receiver, in series with a 400 ohm resistor, without using an actual antenna.

2. Turn the wave switch to Band D. Set the test oscillator to 15500 kc. Open the variable condenser plates all the way and peak the oscillator trimmer, C16.

3. Set the test oscillator to 14000 kc and tune in its signal. Then peak the translator trimmer, C7.

4. Set the test oscillator to 6000 kc and tune in its signal. If necessary, shift turns on the translator coil, L5.

5. Repeat the procedure for greater accuracy.

FAILURE TO OPERATE WHEN SWITCHED OFF AND THEN ON AGAIN

It sometimes happens that the receiver will fail to operate after it is switched off and then switched on again within approximately a second. This is due to blocking of the 2A5 AF tubes. It happens only when the receiver is switched on after exactly the right interval which will vary with different tubes. The condition will seldom be encountered since the interval of time between switching the receiver off and then on is very critical. If the receiver is left switched off for a half minute or more, it will resume operation when turned on without any trouble. The condition can be entirely eliminated by connecting another 500M ohm resistor in series with the detector plate resistor, R14, and then connecting a .2 mfd. 200 volt condenser from the junction of these two resistors to the chassis.

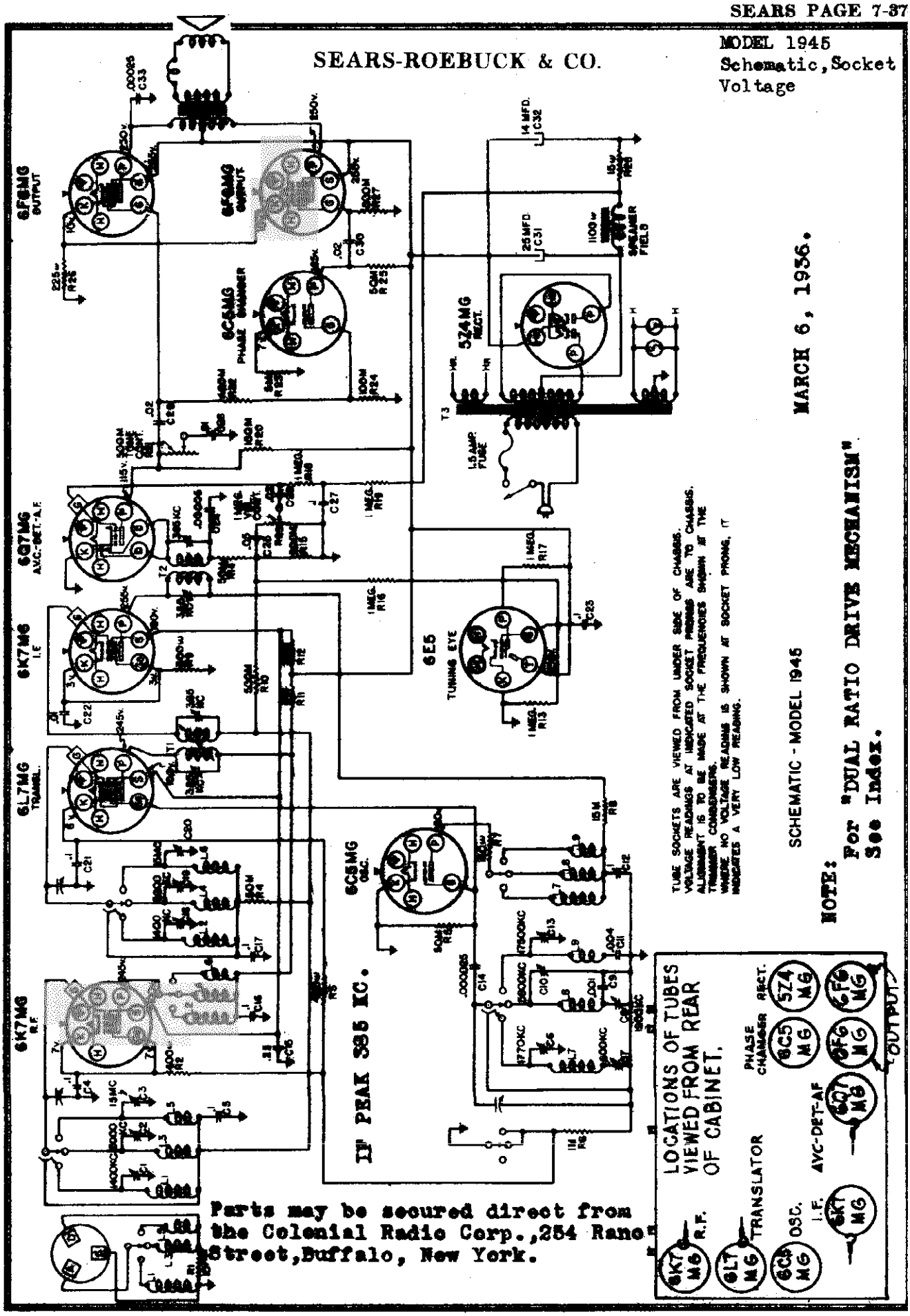

©John F. Rider, Publisher

MODEL 1945
Trimmers, Chassis, Data
Alignment, Sensitivity

SEARS-ROEBUCK & CO.

LOCATIONS OF PARTS UNDER CHASSIS - MODEL 1945

TRIMMER ADJUSTMENTS ON TOP OF CHASSIS

IF ALIGNMENT

1. Connections:

Connect the ground lead of the test oscillator to the receiver chassis. Connect the output lead of the test oscillator in series with a .1 mfd condenser, to the receiver antenna post. Use the lowest signal strength necessary for alignment. Connect the cable of a VoltOhmyst across the voice coil of the speaker. Use the 10 volt AC scale. The meter will be required during most of the alignment. Connect a jumper between the "F" and "F" terminals of the antenna terminal block at the rear of the chassis.

2. Receiver Settings:

Turn the Tone Control all the way to the right position and the Selectivity Control all the way to the left (broadest position) and leave it in this position for the remainder of the alignment procedure.

3. Alignment:

(a) Turn the Variable Selectivity Control all the way to the right (broad position). Loosen the set screw in the right knob and push the cable all the way into its tube. Then tighten the set screw. Be careful that it is not tightened so much that the flexible cable is cut. Be sure that the Variable Selectivity Control knob remains at its full clockwise position during the operation.

After this has been done turn the Variable Selectivity Control knob all the way to the left (sharpest position) and leave it in this position for the remainder of the alignment procedure.

(b) Set the test oscillator to 455 kc. Connect its output (through the .1 mfd condenser) to the control grid (top cap) of the 6K7G IF tube. Adjust the IF output transformer, T2, for maximum output meter reading.

(c) Change the test oscillator output connection back to the 6K7G tube and repeat the IF output transformer adjustment. Then repeat the IF input transformer adjustment with the test oscillator connected to the 6K7G tube. The output power from the test oscillator should be kept at the lowest possible value consistent with a satisfactory output meter reading.

BROADCAST BAND ALIGNMENT

1. Connections:

Connections for Broadcast band alignment are the same as for IF alignment except that the dial pointer is set to the high frequency end of the dial (fully meshed) and the test oscillator output lead is connected to a .0005 mfd mica condenser which is connected from the test oscillator output lead to the "A" terminal on the antenna terminal block at the rear of the chassis.

2. Receiver Setting:

Turn the Volume Control all the way on, the Tone Control all the way to the right, and the BROADCAST position. Leave the Variable Selectivity Control in its sharp position (counter clockwise).

3. Alignment:

(a) Set the test oscillator to 1770 kc. Open the variable condenser all the way and peak the oscillator trimmer, C6. The locations of all of the trimmers are shown in the illustrations.

(b) Set the test oscillator to 1400 kc and tune in its signal. Peak the broadcast antenna and translator trimmers, C1 and C18.

(c) Set the test oscillator to 600 kc and tune in its signal. Peak the broadcast oscillator padder, C7. The variable should be rocked a degree or two during the adjustment.

(d) Repeat the 1770 kc and then the 1400 and 600 kc adjustments. Always keep the test oscillator output power at its lowest possible value, to render the AVC action inoperative.

SHORT WAVE BAND "G" ALIGNMENT

1. Connections:

Connections remain the same as for Broadcast band alignment except that the .0005 mfd condenser in series with the test oscillator output lead is disconnected and a 400 ohm resistor connected in its stead.

2. Receiver Setting:

Turn the Wave Band switch to the "g" position. Other settings remain the same as for Broadcast band alignment.

3. Alignment:

(a) Set the test oscillator to 5800 kc. Open the variable condenser all the way and peak the oscillator trimmer, C10.

(b) Set the test oscillator to 5000 kc and tune in its signal. Peak the antenna and translator trimmers, C8 and C19.

(c) Set the test oscillator to 1900 kc and tune in its signal. Peak the oscillator padder, C8. The variable should be rocked a degree or two during the adjustment.

(d) Repeat the 5800 kc and then the 5000 kc and 1900 kc adjustments. Always keep the test oscillator output power at its lowest possible value.

SHORT WAVE BAND "F" ALIGNMENT

1. Connections:

Connections remain the same as for Broadcast band alignment except that the .0005 mfd condenser in series with the test oscillator output lead is disconnected and a 400 ohm resistor connected in its stead.

2. Receiver Settings:

Turn the Wave Band switch to the "f" position. Other settings remain the same as for Broadcast band alignment.

3. Alignment:

(a) Set the test oscillator to 15000 kc. Open the variable condenser all the way and peak the oscillator trimmer, C5.

(b) Set the test oscillator to 11000 kc and tune in its signal. Peak the antenna and translator trimmers, C4 and C16.

(c) Set the test oscillator to 17800 kc. Open the variable condenser all the way and peak the oscillator trimmer, C15.

(d) Repeat the 15000 kc and then the 11000 kc adjustments. Always keep the test oscillator output power at its lowest possible value.

SHORT WAVE BAND "f" ALIGNMENT

1. Connections:

All connections remain the same as for band "g".

2. Receiver Settings:

Turn the Wave Band switch to the "f" position. Other receiver settings remain the same as for band "g" alignment.

3. Alignment:

(a) Set the test oscillator to 17800 kc. Open the variable condenser all the way and peak the oscillator trimmer, C15.

(b) Set the test oscillator to 15000 kc and tune in its signal. Peak the antenna and translator trimmers, C4 and C16. Keep the test oscillator output power at its lowest possible value.

SENSITIVITY

The following figures are given as an indication of the sensitivities that should be had at various frequency settings of the receiver. It is necessary to have a test oscillator with an accurately calibrated attenuator so that its output power can be known. The figures represent the input voltage necessary to secure an output reading of 50 milliwatts.

For making measurements in the broadcast band the test oscillator output is to be connected, in series with a .0005 mfd mica condenser, to the "A" terminal at the rear of the chassis, as for alignment. For short wave band measurements a 400 ohm resistor is to be connected instead of the .0005 mfd condenser. Turn the receiver Volume Control all the way on, the Tone Control all the way to the right, and the Selectivity Control all the way to the left.

Frequency	Broadcast Band:	Short Wave Band:	Tubes And Their Functions:
600 kc	600 kc		6K7GT - RF
1400 kc	1400 kc		6Q6GT - Oscillator
1900 kc		1900 kc	6K7GT - Translator
3000 kc		3000 kc	6K7GT - IF
5000 kc		5000 kc	6Q7GT - AVC - Detector - AF
6000 kc		6000 kc	6F8G - Phase Inverter
Band "f":		Band "g":	2-6V6GT - Push Pull Output
5000 kc	20	20	5Y3GT - Rectifier
10000 kc	20	20	6E5 - Tuning Eye
15000 kc	20	20	

General Description:

This is a ten tube (including Tuning Eye) superheterodyne. In addition to the BROADCAST band it incorporates POLICE and FOREIGN SHORT WAVE bands. A Variable Tone Control is incorporated as well as a separate Variable Selectivity Control. The 6E5 Tuning Eye simplifies accurate tuning.

Antenna and Ground Connections:

These receivers are designed for use with either a conventional type of antenna or with a Doublet Antenna. There is a terminal block at the rear of the chassis. When a conventional outdoor antenna is used, the lead-in from the antenna should be connected to the terminal marked, "A". The ground lead of the set should be connected to the terminal marked, "G". This is one of the terminals on the terminal block at the rear of the chassis.

When a Doublet Antenna is used, one wire of the twisted down lead should be connected to the terminal marked, "A", and the other wire under the terminal marked, "F". Either wire may be connected to either terminal. The ground connection is made to the terminal marked, "G".

The Fuse:

There is a 1½ ampere fuse mounted under the cover marked, "FUSE" at the rear of the chassis. Remove the power cord plug from its receptacle before taking off the fuse cover. The Radio tube should be tested before replacing the fuse since a defect in this tube will cause the fuse to blow.

The AVC Circuit:

The diode current of the 6Q7GT tube flowing through the 500K ohm resistor, R16 (see schematic), develops a voltage drop across it. This voltage is applied between the control grids of the 6F8, translator, and IF tubes to provide AVC action.

©John F. Rider, Publisher

©John F. Rider, Publisher

SEARS-ROEBUCK & CO.

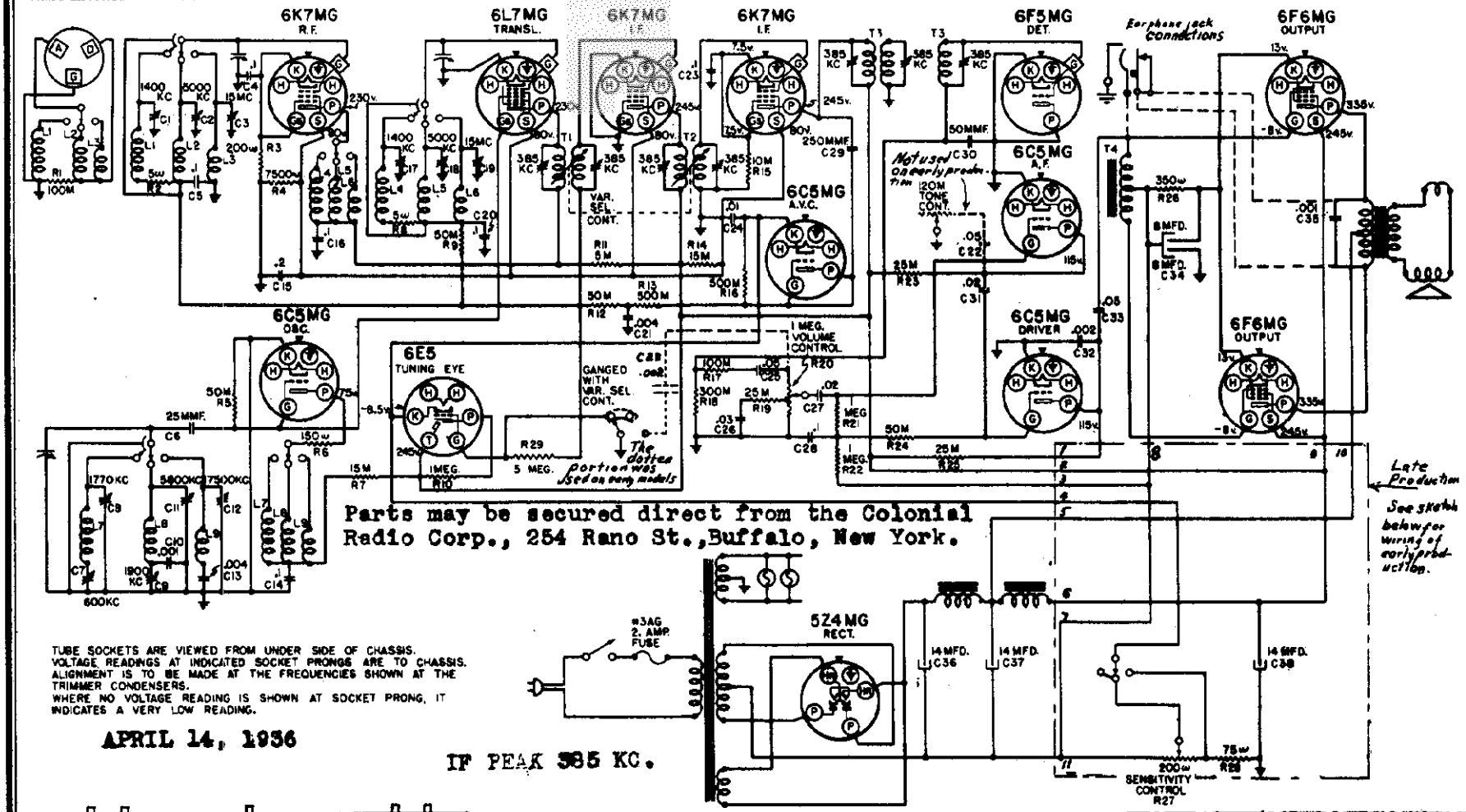

Parts may be secured direct from the Colonial Radio Corp., 254 Rano St., Buffalo, New York.

TUBE SOCKETS ARE VIEWED FROM UNDER SIDE OF CHASSIS.
VOLTAGE READINGS AT INDICATED SOCKET PRONGS ARE TO CHASSIS.
ALIGNMENT IS TO BE MADE AT THE FREQUENCIES SHOWN AT THE TRIMMER CONDENSERS.
WHERE NO VOLTAGE READING IS SHOWN AT SOCKET PRONG, IT INDICATES A VERY LOW READING.

APRIL 14, 1936

IF PEAK 385 KC.

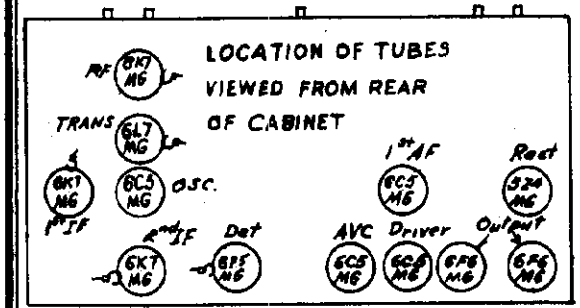

Installing a Jack for The Use of Earphones:

A hole is provided in the rear of the chassis, near the speaker socket, for installing an earphone jack. This hole is plugged with a brass insert that can be removed. The connections for installing such a jack are shown in the above schematic.

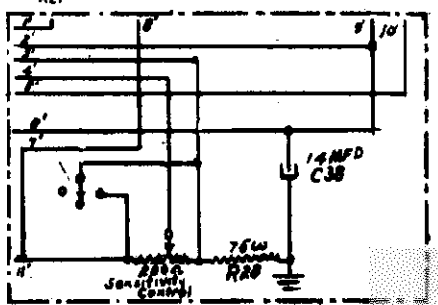

MODEL 1946
Early, Chassis 588
Late, Chassis 588X

MODEL 1946
Early, Chassis 388
Late, Chassis 388X

SEARS-ROEBUCK & CO.

Chassis, Trimmers
Alignment, Sensitivity

ALIGNMENT PROCEDURE

IF Alignment

1. Connections:

Connect the ground lead of the test oscillator to the receiver chassis. Connect the output lead of the test oscillator, in series with a .1 mfd condenser, to the positions mentioned below under "Alignment". Connect the low scale of an output meter across the loud speaker voice coil. Connect a jumper between terminals "D" and "G" of the antenna terminal block at the rear of the chassis.

2. Receiver Settings:

Turn the Wave Band switch to the BROADCAST position and the Station Selector to about 550 kc. Turn the receiver Volume Control all the way on and the Variable Selectivity Control to its sharpest position (all the way counter clockwise).

3. Alignment:

(a) Turn the Variable Selectivity Control all the way to the right. Loosen the set screws that clamp the IF transformer flexible cables and push the cables as far as possible into their copper tubes. Then re-tighten the set screws, making sure that the Variable Selectivity Control remains in its extreme clockwise position. Do not tighten the set screws so much that they cut the flexible cables. Then turn the Variable Selectivity Control all the way counter clockwise and leave it in this position for the remainder of the alignment procedure.

(b) Set the test oscillator to 385 kc and connect its output lead (in series with a .1 mfd condenser) to the control grid of the 6K7MG second IF tube. Peak the IF output transformer, T3.

(c) Change the test oscillator output lead to the 6K7MG first IF tube and peak the IF interstage transformer, T2.

(d) Change the test oscillator output lead to the control grid of the 6L7MG translator tube and peak the IF input transformer, T1.

(e) Repeat operations (b), (c) and (d), connecting the test oscillator output lead to the second IF tube, then to the first IF tube and then to the translator tube, as was done originally. Always keep the test oscillator output power at its lowest possible value to render the AVC action inoperative.

BROADCAST BAND ALIGNMENT

1. Connections:

Disconnect the .1 mfd condenser from the output lead of the test oscillator. Connect a .00025 mfd mica condenser in series with the test oscillator output lead and the "A" terminal of the antenna terminal block at the rear of the chassis. All other connections remain the same as for IF alignment.

2. Receiver Settings:

Turn the Wave Band switch to the BROADCAST position, the Volume Control all the way on, and the Variable Selectivity Control to its sharpest position, as for IF alignment.

3. Alignment:

(a) Set the test oscillator to 1770 kc. Open the Variable Condenser plates all the way and peak the broadcast oscillator trimmer, C8.

(b) Set the test oscillator to 1400 kc and tune in its signal. Peak the Broadcast antenna trimmer, C1, and the Broadcast translator trimmer, C17. The locations of all the trimmers are shown in the Service Illustrations.

(c) Set the test oscillator to 600 kc and tune in its signal. Peak the Broadcast oscillator padder, C7. The variable should be rocked a degree or two while making this adjustment.

(d) Repeat the 1770 kc, then the 1400 kc, and then the 600 kc adjustment for greatest accuracy. Always keep the test oscillator output at its lowest possible value.

(e) To check the dial calibration, set the test oscillator at 1000 kc and tune in its signal. If necessary, turn the dial pointer to 1000 kc, being careful not to allow the variable condenser to turn.

SHORT WAVE BAND "B" ALIGNMENT

1. Connections:

Disconnect the .00025 mfd mica condenser from the output lead of the test oscillator and replace it with a 400 ohm carbon resistor. Other connections remain the same as for Broadcast alignment.

2. Receiver Settings:

Turn the Wave Band switch to the "B" position. Other settings remain the same as for Broadcast Band alignment.

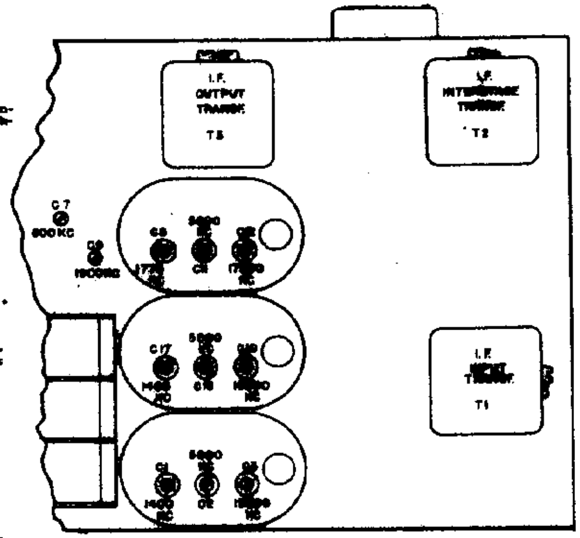

3. Alignment:

(a) Set the test oscillator to 5000 kc. Open the Variable Condenser plates all the way and peak the oscillator trimmer, C11.

(b) Set the test oscillator to 5000 kc and peak the antenna trimmer, C2, and the translator trimmer, C18.

(c) Set the test oscillator to 1800 kc and tune in its signal. Peak the oscillator padder, C9. The variable should be rocked a degree or two during the adjustment.

(d) Repeat the alignment operations in their original order for greatest accuracy. Always keep the test oscillator output at its lowest possible value.

SHORT WAVE BAND "C" ALIGNMENT

1. Connections:

All connections remain the same as for band "B" alignment.

2. Receiver Settings:

Turn the Wave Band switch to the "C" position. Other settings remain the same as for band "B" alignment.

3. Alignment:

(a) Set the test oscillator to 17,000 kc. Open the Variable Condenser plates all the way and adjust the oscillator trimmer, C12.

(b) Set the test oscillator to 15,000 kc and tune in its signal. Peak the antenna trimmer, C3, and the translator trimmer, C19.

(c) Repeat the 17,000 kc adjustment and then the 15,000 kc adjustment for greater accuracy. Always keep the test oscillator output power at its lowest possible value.

SENSITIVITY

The following figures are given as an indication of the approximate sensitivities that should be had at various settings of the receiver. It is necessary to have a test oscillator with an accurately calibrated attenuator so that the power output can be known. The output meter is to be connected across the loud speaker voice coil. An output meter reading of 2.6 volts should be obtained for each of the input voltages shown for the frequencies listed.

The Volume Control of the receiver must be all the way on, and the Variable Selectivity Control in the sharpest position (all the way counter clockwise). Terminals "D" and "G" on the antenna terminal block must be connected together with a jumper. The ground lead of the test oscillator is to be connected to the receiver chassis. The output lead of the test oscillator, in series with the value of condenser or resistor shown below, is to be connected as indicated for the particular frequency at which the measurement is being made.

The Sensitivity Control at the rear of the chassis is to be adjusted so that an output meter reading of 2.6 volts is obtained with a 400 microvolt input connected to the translator grid.

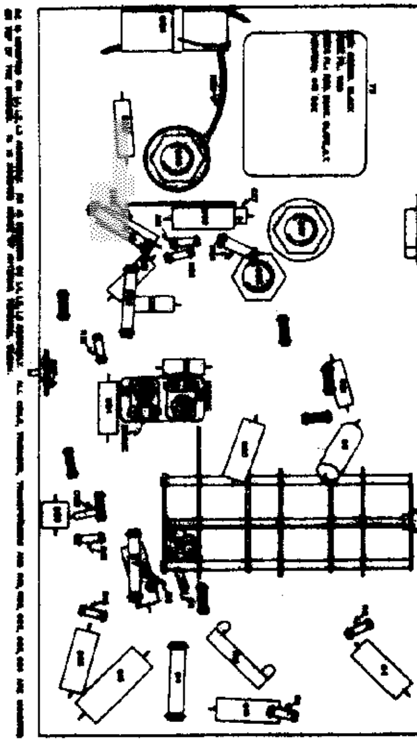

LOCATIONS OF PARTS - MODEL 1946

[illegible]	[illegible]	[illegible]	[illegible]
Translator Grid	.1 mfd	385 kc	400
Antenna Terminal "A"	.00025 mfd	600 kc	[illegible]
Antenna Terminal "A"	.00025 mfd	[illegible] kc	**[illegible]
Antenna Terminal "A"	.00025 mfd	1400 kc	[illegible]
Antenna Terminal "A"	400 ohms	1800 kc	100
Antenna Terminal "A"	400 ohms	[illegible] kc	[illegible]
Antenna Terminal "A"	400 ohms	4000 kc	[illegible]
Antenna Terminal "A"	400 ohms	[illegible] kc	[illegible]
Antenna Terminal "A"	400 ohms	[illegible] kc	40
Antenna Terminal "A"	400 ohms	15000 kc	[illegible]
Antenna Terminal "A"	400 ohms	18000 kc	10

** FINAL SENSITIVITY CONTROL ADJUSTMENT

After all bands have been aligned, repeat the 1000 kilocycle adjustment, and reset the sensitivity control so that an output meter reading of 2.6 volts is obtained with a 10 microvolt input from the test-oscillator.

©John F. Rider, Publisher

SEARS-ROEBUCK & CO.

MODEL 1954X
Schematic
Trimmers

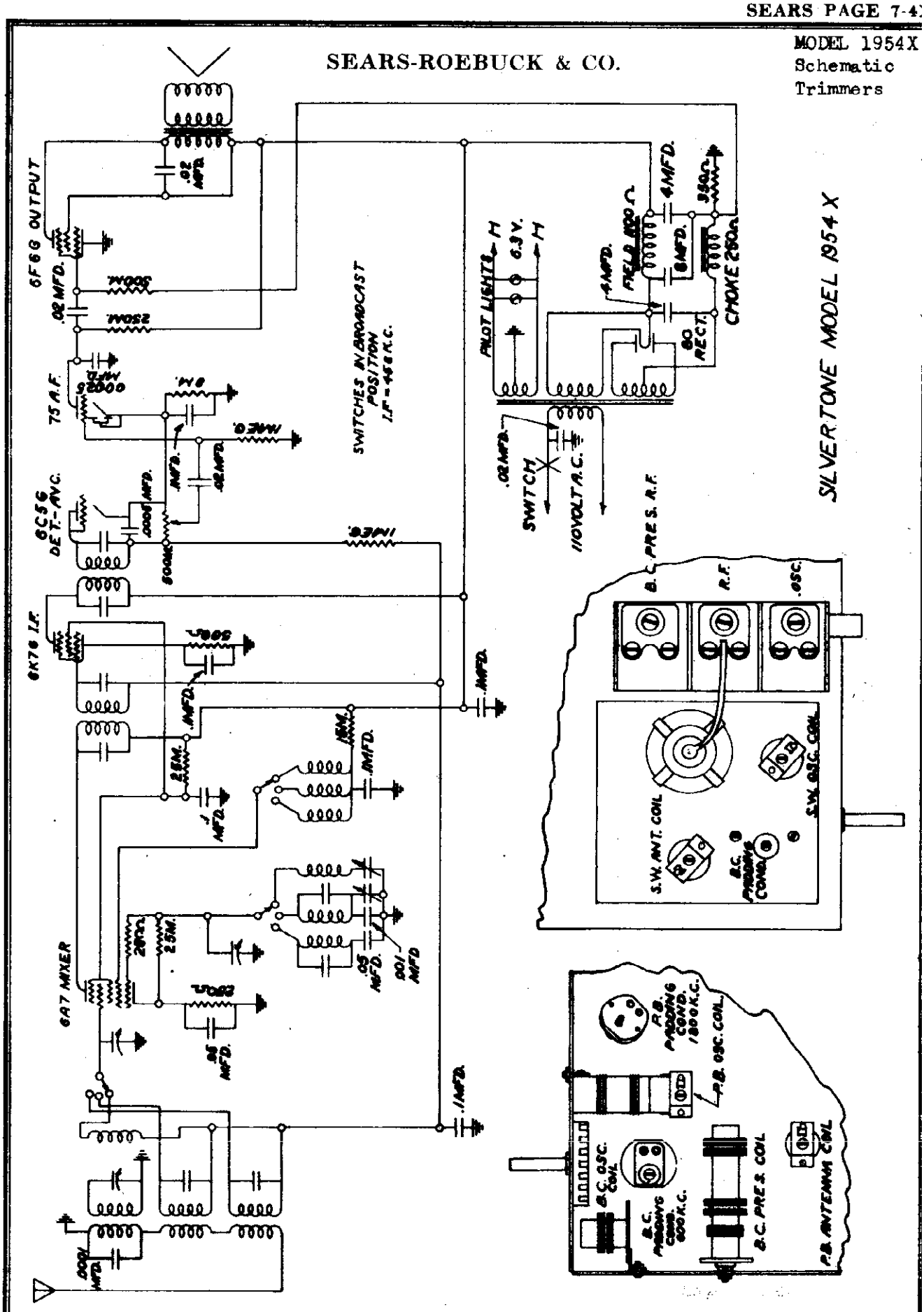

©John F. Rider, Publisher

MODEL 1954X
Alignment

SEARS-ROEBUCK & CO.

Parts

The alignment of this receiver requires the use of a test oscillator that will cover the frequencies of 456, 600, 1400, 1800, 4000, 6000 and 14,000 K.C. and an output meter to be connected across the primary or secondary of the output transformers. If possible, all alignment should be made with the volume control on maximum and the test oscillator output as low as possible, to prevent the AVC from operating and giving false readings.

I. F. ALIGNMENT: Adjust the test oscillator to 456 K.C. and connect the output to the grid of the first detector tubes (6A7) through a .05 or .1 mfd. condenser, The ground on the test oscillator can be connected to the chassis ground. Align all four I.F. trimmers to peak or maximum reading on the output meter.

R. F. ALIGNMENT: Adjust the oscillator to 1400 K. C. and connect the output to the antenna post through a .0001 mfd. mica condenser to give the equivalent of an antenna about 60 feet. Set the receiver pointer to 1400 K. C. and adjust the rear gang condenser trimmer to peak. Next re-set the dial pointer on the receiver and the test oscillator to 600 K.C. Slowly increase or decrease the oscillator padding condenser and at the same time continuously tuning back and forth across the signal with the receiver until the maximum reading is obtained on the output meter. This adjustment seems a little complicated but is the easiest way to adjust the oscillator to the pre-selector or R.F. section. The padding condenser is located on the top of the removable R. F. assembly. Return to 1400 K.C. and again go over the adjustments at that frequency to be sure they have not been thrown out of adjustment.

SHORT WAVE BANDS

The foreign band of 19 to 49 meters can be adjusted by the two trimmers on the short wave coil located on the top of the chassis. Set the test oscillator to 14 megacycles. The oscillator coil is located near the dial.

The police and aviation band can be adjusted by the trimmers on the two coils underneath the chassis. Adjust the oscillator coil (the one near the wave change switch) so that the dial pointer is on the scale at 4000 K.C., then adjust the R. F. coil to resonance. The low frequency end or 1800 K.C. can be adjusted by the police band padding condenser using the same method as the 600 K.C. adjustment. The gang condenser trimmers are not to be used for alignment of either of the short wave bands.

Part No.	Description	List Price
P176	Power Cord & Plug	$0.26
P540	Power Transformer	2.18
P516	Band Switch	.47
P517	Volume Control	.69
P518	On-Off Switch	.29
P524	Airplane Dial	1.70
P160	Electrolytic Condenser	1.28
P474	4 mfd. Wet Electrolytic Condenser	.73
P483	1st I.F. Transformer	1.10
P484	2nd I.F. Transformer	1.10
P477	Three Gang Condenser	2.25
P485	Filter Choke	.56
P210	Padding Condenser	.38
P193	Broadcast Pre-Selector Coil	.60
P173	Broadcast Oscillator Coil	.35
P170	350 ohm Resistor	.15
	6" Dynamic Speaker	3.75
	Police Band Oscillator	.25
	Police Band Antenna Coil	.25
	S. W. Oscillator Coil	.30
	S. W. Antenna Coil	.30
	Tube Socket - state marking	.08
	Any mica condenser not listed	.15
	Any by-pass condenser not listed, state capacity and voltage	.13

Parts for this model may be ordered from the Continental Radio and Television Corp. 525 W. Huron ST. Chicago Illinois The above prices are subject to a discount of 50% net 10 days

PRICES ARE SUBJECT TO CHANGE WITHOUT NOTICE

©John F. Rider. Publisher

MODELS 1981,1981C,1941

SEARS-ROEBUCK & CO. Schematic

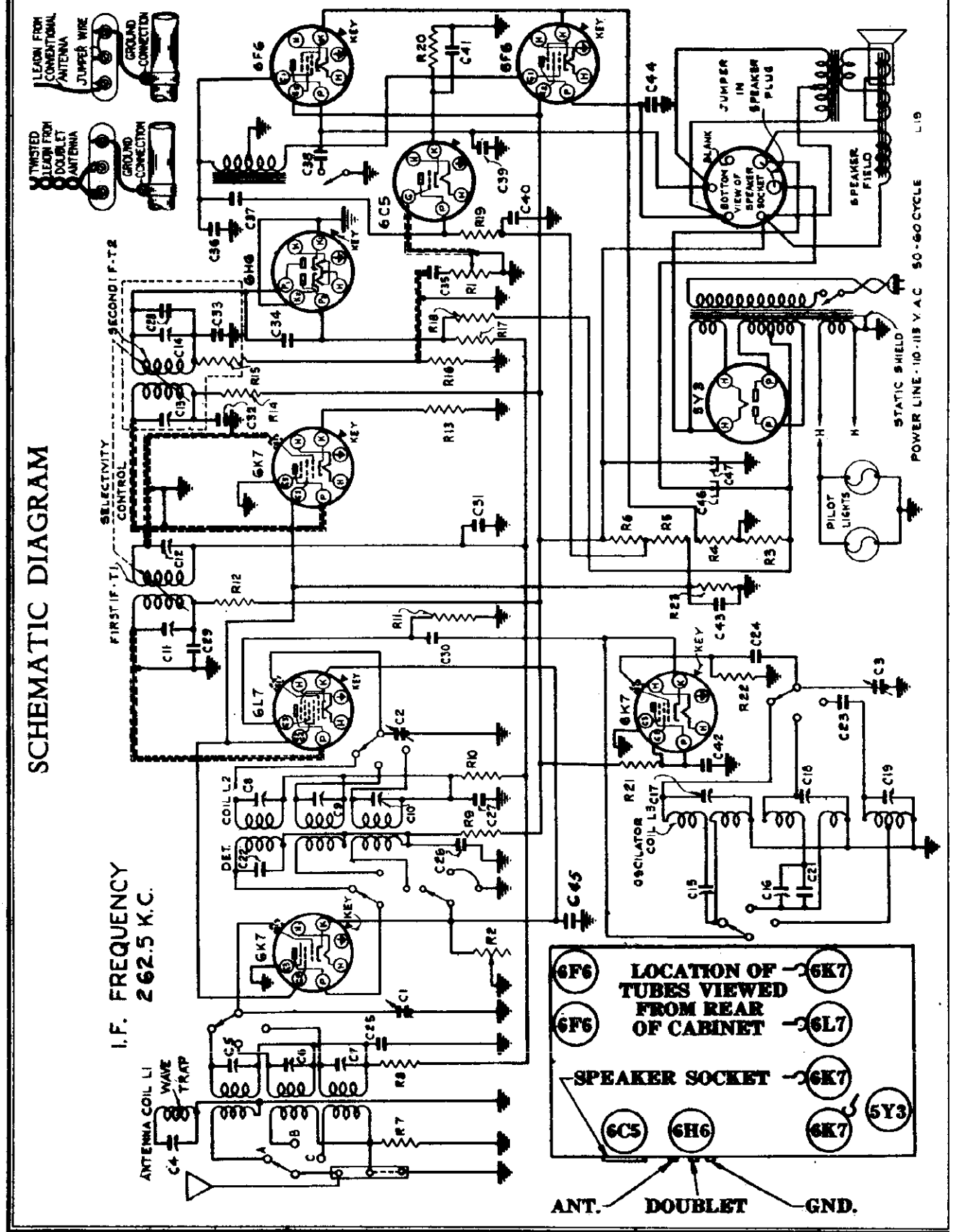

©John F. Rider, Publisher

MODELS 1927X,1937X
MODEL 1992X
MODEL 1993X
Alignment

SEARS-ROEBUCK & CO.

Models 1927X and 1937X

INTERMEDIATE ALIGNMENT:

1. Connect the high side of the test oscillator output to the control grid of the 1C6 modulator tube through a .02 Mfd. condenser. Leave the grid cap connected to the grid terminal of the tube, and connect the ground side of the test oscillator to the receiver ground.

2. Set the test oscillator frequency to 465 kilocycles (this must be accurate).

3. Align the second intermediate transformer by turning one of the trimmer screws accessible through holes in the top of the transformer shields up and down (increasing and decreasing capacity) until maximum reading is obtained on the output meter, after which adjust the other trimmer screw of the same transformer for maximum sensitivity.

4. Adjust the first intermediate transformer in the same manner as the second I.F. transformer.

TO ALIGN THE VARIABLE CONDENSER: It is important when aligning the gang condenser, padding and trimmer condensers to follow the procedure carefully, otherwise the receiver will be insensitive and the dial calibration will be incorrect. The padding and trimmer condensers located underneath the chassis will be referred to by their functions as indicated on the circuit diagram.

1. Connect the high output side of the test oscillator through a 400 ohm resistor to the receiver antenna lead and the low side to the set ground.

2. Place the band selector switch for operation on the 5.8 to 18 megacycle band, tune the receiver dial, and set the test oscillator frequency to exactly 15 megacycles. Twist and untwist neutralizing link for best 15 megacycle signal response. Note: This adjustment will be found to be broad. Next adjust the 15 megacycle antenna trimmer for maximum 15 megacycle signal sensitivity.

3. Replace the 400 ohm resistor in series with test oscillator lead with a 200 mmfd. condenser, place the band selector switch for operation on the 540 to 1720 kilocycle band and set test oscillator frequency to exactly 1720 kilocycles.
Rotate gang condenser so that plates are completely out of mesh and bring in the 1720 kilocycle signal to maximum output by adjusting 1720 kilocycle oscillator trimmer.

4. With band selector switch placed for operation on the 540 to 1720 kilocycle band set test oscillator frequency and receiver dial to exactly 1400 kilocycles. Adjust 1400 kilocycle preselector and antenna trimmers for maximum 1400 kilocycle signal sensitivity.

5. Leave band selector switch for operation on 540 to 1720 kilocycle band, tune receiver dial and set test oscillator frequency to approximately 600 kilocycles. While rocking gang condenser slightly to right and left adjust 600 kilocycle oscillator padder for maximum sensitivity.

Model 1993X

INTERMEDIATE ALIGNMENT:

1. Connect the high side of the test oscillator output to the control grid of the 1C6 modulator tube through a .02 Mfd. condenser. Leave the grid cap connected to the grid terminal of the tube, and connect the ground side of the test oscillator to the receiver ground.

2. Set the test oscillator frequency to 465 kilocycles (this must be accurate).

3. Align the second intermediate transformer by turning one of the trimmer screws accessible through holes in the top of the transformer shields up and down (increasing and decreasing capacity) until maximum reading is obtained on the output meter, after which adjust the other trimmer screw of the same transformer for maximum sensitivity.

4. Adjust the first intermediate transformer in the same manner as the second I.F. transformer.

TO ALIGN THE VARIABLE CONDENSER: It is important when aligning the gang condenser, padding and trimmer condensers to follow the procedure carefully, otherwise the receiver will be insensitive and the dial calibration will be incorrect. The padding and trimmer condensers located underneath the chassis will be referred to by their functions as indicated on the circuit diagram.

1. Connect the high output side of the test oscillator through a 400 ohm resistor to the receiver antenna lead and the low side to the set ground.

2. Place the band selector switch for operation on the 6 to 18 megacycle band, tune the receiver dial, and set the test oscillator frequency to exactly 15 megacycles. Adjust 15 megacycle antenna trimmer for maximum 15 megacycle signal sensitivity.

3. Replace the 400 ohm resistor in series with test oscillator lead with a 200 mmfd. condenser, place the band selector switch for operation on the 540 to 1720 kilocycle band and set test oscillator frequency to exactly 1720 kilocycles.
Rotate gang condenser so that plates are completely out of mesh and bring in the 1720 kilocycle signal to maximum output by adjusting 1720 kilocycle oscillator trimmer.

4. With band selector switch placed for operation on the 540 to 1720 kilocycle band set test oscillator frequency and receiver dial to exactly 1400 kilocycles. Adjust 1400 kilocycle preselector and antenna trimmers for maximum 1400 kilocycle signal sensitivity.

5. Leave band selector switch for operation on 540 to 1720 kilocycle band, tune receiver dial and set test oscillator frequency to approximately 600 kilocycles. While rocking gang condenser slightly to right and left adjust 600 kilocycle padder for maximum sensitivity.

6. Place band selector switch for operation on the 200-140 kilocycle band, rotate gang condenser so plates are completely out of mesh, and set test oscillator frequency to exactly 200 kilocycles. Bring in 200 kilocycle signal to maximum output with 200 oscillator trimmer.

7. With band selector switch for operation on 200-140 kilocycle band, tune receiver dial and set test oscillator frequency to exactly 350 kilocycles. Adjust 350 kilocycle antenna preselector trimmers for maximum 350 kilocycle signal response.

8. Leave band selector switch for operation on the 200-140 kilocycle band, tune receiver dial and set test oscillator frequency to approximately 140 kilocycles. Then while rocking gang condenser slightly to right and left adjust 140 kilocycle padding condenser for maximum sensitivity.

Model 1992X

INTERMEDIATE ALIGNMENT:

1. Connect the high side of the test oscillator output to the control grid of the 1C6 modulator tube through a .02 Mfd. condenser. Leave the grid cap connected to the grid terminal of the tube, and connect the ground side of the test oscillator to the receiver ground.

2. Set the test oscillator frequency to 465 kilocycles (this must be accurate).

3. Align the second intermediate transformer by turning one of the trimmer screws accessible through holes in the top of the transformer shields up and down (increasing and decreasing capacity) until maximum reading is obtained on the output meter, after which adjust the other trimmer screw of the same transformer for maximum sensitivity.

4. Adjust the first intermediate transformer in the same manner as the second I.F. transformer.

TO ALIGN THE VARIABLE CONDENSER: It is important when aligning the gang condenser, padding and trimmer condensers to follow the procedure carefully, otherwise the receiver will be insensitive and the dial calibration will be incorrect. The padding and trimmer condensers located underneath the chassis will be referred to by their functions as indicated on the circuit diagram.

1. Connect the high output side of the test oscillator through a 400 ohm resistor to the receiver antenna lead and the low side to the set ground.

2. Place the band selector switch for operation on the 5.8 to 18 megacycle band, tune the receiver dial, and set the test oscillator frequency to exactly 15 megacycles. Twist and untwist neutralizing link for best 15 megacycle signal response. Note: This adjustment will be found to be broad. Next adjust the 15 megacycle antenna trimmer for maximum 15 megacycle signal sensitivity.

3. Replace the 400 ohm resistor in series with test oscillator lead with a 200 mmfd. condenser, place the band selector switch for operation on the 540 to 1720 kilocycle band and set test oscillator frequency to exactly 1720 kilocycles.
Rotate gang condenser so that plates are completely out of mesh and bring in the 1720 kilocycle signal to maximum output by adjusting 1720 kilocycle oscillator trimmer.

4. With band selector switch placed for operation on the 540 to 1720 kilocycle band set test oscillator frequency and receiver dial to exactly 1400 kilocycles. Adjust 1400 kilocycle preselector and antenna trimmers for maximum 1400 kilocycle signal sensitivity.

5. Leave band selector switch for operation on 540 to 1720 kilocycle band, tune receiver dial and set test oscillator frequency to approximately 600 kilocycles. While rocking gang condenser slightly to right and left adjust 600 kilocycle padder for maximum sensitivity.

©John F. Rider, Publisher

Three Types
Schematics, Voltage

SEARS-ROEBUCK & CO.

MODELS 1986, 1987, 4403, 4463
4484, 4563, 4564, 4584

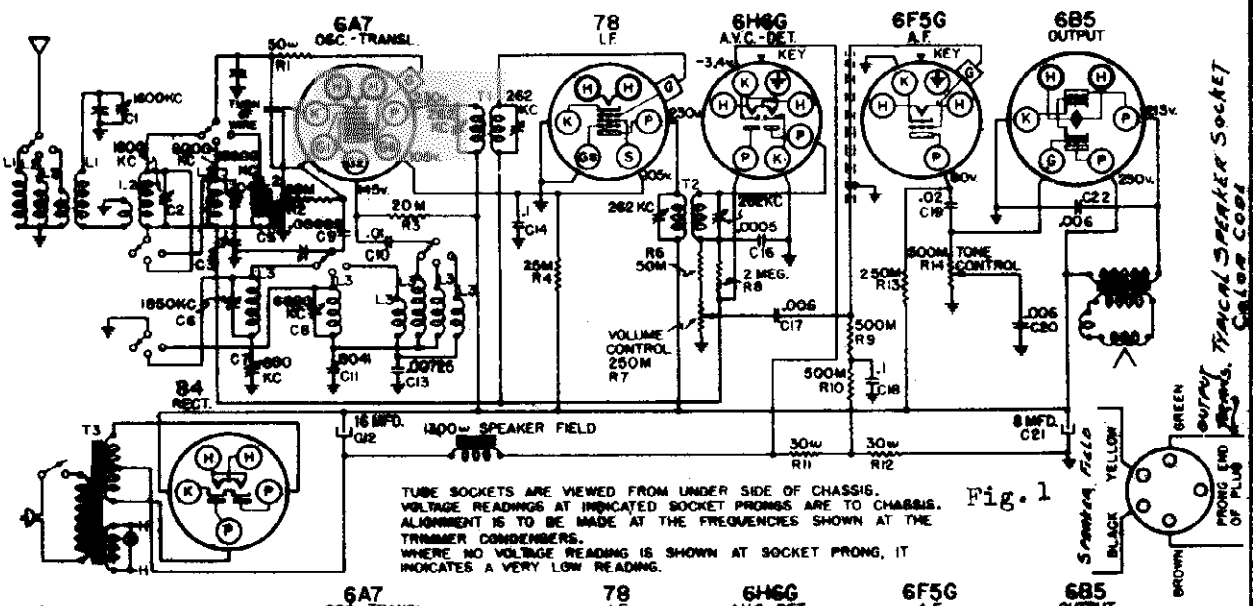

TUBE SOCKETS ARE VIEWED FROM UNDER SIDE OF CHASSIS.
VOLTAGE READINGS AT INDICATED SOCKET PRONGS ARE TO CHASSIS.
ALIGNMENT IS TO BE MADE AT THE FREQUENCIES SHOWN AT THE TRIMMER CONDENSERS.
WHERE NO VOLTAGE READING IS SHOWN AT SOCKET PRONG, IT INDICATES A VERY LOW READING.

Fig. 1

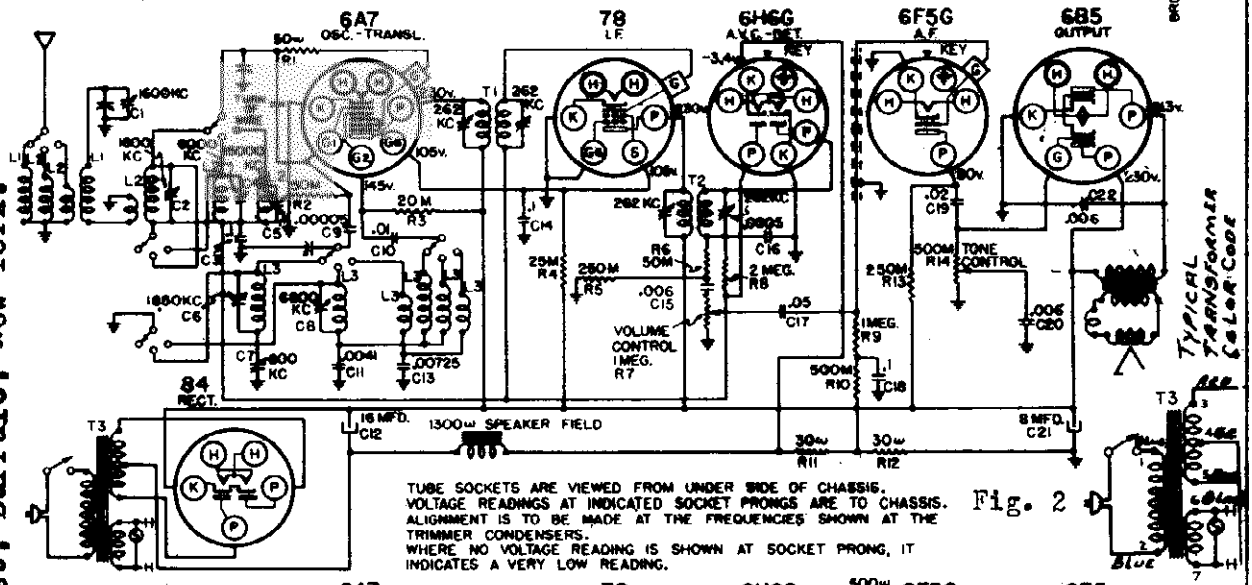

TUBE SOCKETS ARE VIEWED FROM UNDER SIDE OF CHASSIS.
VOLTAGE READINGS AT INDICATED SOCKET PRONGS ARE TO CHASSIS.
ALIGNMENT IS TO BE MADE AT THE FREQUENCIES SHOWN AT THE TRIMMER CONDENSERS.
WHERE NO VOLTAGE READING IS SHOWN AT SOCKET PRONG, IT INDICATES A VERY LOW READING.

Fig. 2

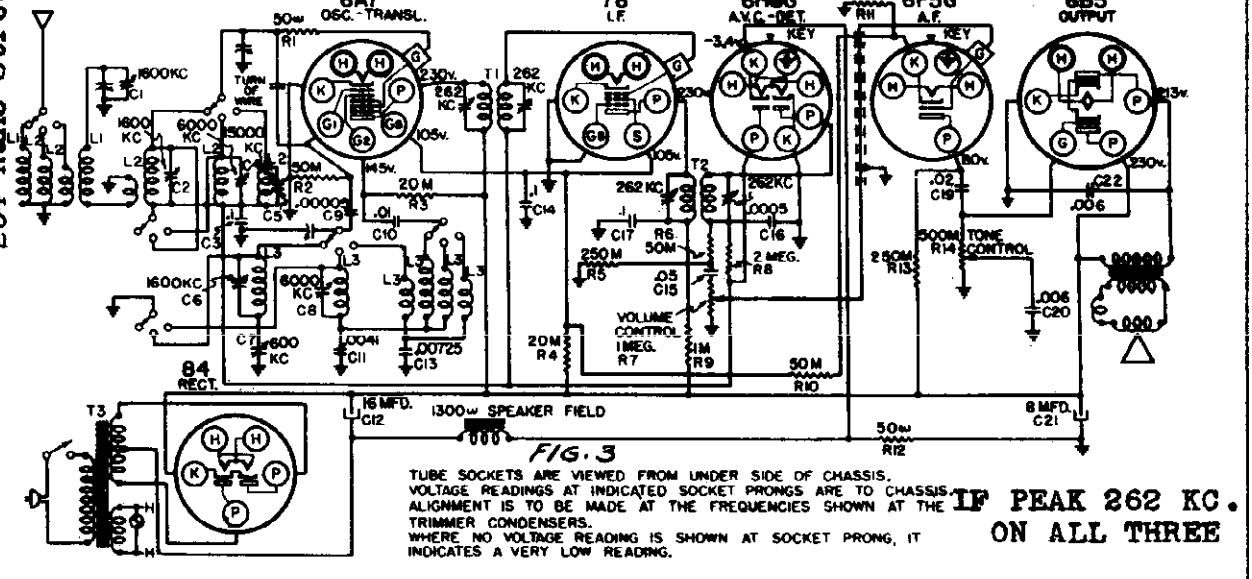

FIG. 3

TUBE SOCKETS ARE VIEWED FROM UNDER SIDE OF CHASSIS.
VOLTAGE READINGS AT INDICATED SOCKET PRONGS ARE TO CHASSIS.
ALIGNMENT IS TO BE MADE AT THE FREQUENCIES SHOWN AT THE TRIMMER CONDENSERS.
WHERE NO VOLTAGE READING IS SHOWN AT SOCKET PRONG, IT INDICATES A VERY LOW READING.

IF PEAK 262 KC. ON ALL THREE

Parts may be secured direct from the Colonial Radio Corp., 254 Rano Street, Buffalo, New York.

©John F. Rider, Publisher

MODELS 1986,1987,4403,4463 4484,4563,4564,4584 SEARS-ROEBUCK & CO.

Socket,Chassis,Alignment Changes

ELECTRICAL SPECIFICATIONS

POWER SUPPLY:
All models available - - - - - - - - - - - - - - - - 105-125 volts, 50-60 cycle, 48 watts
All models available - - - - - - - - - - - - - - - - 105-125 volts, 25 cycle, 50 watts

FREQUENCY RANGES:

Band "A"	545-1750 kc
Band "B"	2.2-6.5 mc
Band "P"	6.2-18 mc

ALIGNMENT FREQUENCIES:

	Oscil. Trimmer	Ant.-Transl. Trimmer	Padder
Band "A"	1500 kc	1500 kc	600 kc
Band "B"	6 mc	6 mc	Fixed
Band "P"	-	15 mc	Fixed

INTERMEDIATE FREQUENCY - 262 kc

POWER OUTPUT:

Type - - - - - - - - -	Single Pentode
Undistorted - - - - - - -	2.66 watts
Maximum - - - - - - - - - -	4 watts

LOUD SPEAKER:

Type - - - - - - - - - - - -	Dynamic
Size - - - - - - - - - - - -	6" and 8"
Field coil resistance - - -	1500 ohms
Field coil voltage - - - - -	75 volts

OPERATING FEATURES:
Fidelity Range - - 30 - 5000 cycles
Tone Control - - - - - - - - - Variable
Automatic Volume Control

CHASSIS FEATURES:
Preselector on band "A"
Antenna - - - - - - - - - Conventional

GENERAL INFORMATION

DIFFERENCES IN VOLUME CONTROL CIRCUITS:

Earlier production used a 250M ohm volume control and the circuit shown in Fig. 1. In later production, shown in the circuit of Fig. 2, the volume control value was changed to one megohm. Also, R8 and C15 were added; the value of C17 changed from .006 to .05; the value of R9 changed from 500M ohms to one megohm. The effect of this change is to remove the DC diode current from the volume control to prevent noisy operation of the control.

CHASSIS MARKED 4077 AND LATER:

Chassis that are rubber stamped 4077 or any later letter incorporate the circuit shown in Fig. 3. The differences as compared to Fig. 2 are:

C15 changed from .006 mfd. to .05 mfd.
C17 changed from .05 mfd. to .1 mfd. and its location changed.
The resistors R9, R10, and R11 shown in Fig. 2 were removed.
A new 1M ohm resistor was added and R9 designation assigned to it.
A new 50M ohm resistor was added and R10 designation assigned to it.
A new 500 ohm resistor was added and R11 designation assigned to it.
R4 changed from 25M ohms to 20M ohms.

These changes were made to provide more uniform operation with different makes of tubes.

HEATER CIRCUIT:

Earlier production used a center tapped power transformer heater winding. Later production omitted the center tap and grounded one end of the heater winding.

MODULATION HUM:

Modulation hum, which occurs only when a station is tuned in, can be eliminated by connecting a .003 mfd. 600 volt condenser from one side of the power transformer primary to ground.

Send Purchase Orders DIRECT to Colonial Radio Corp., 254 Rano St., Buffalo, N. Y.

ALIGNMENT PROCEDURE

PRELIMINARY:

Output meter connections -	Across voice coil leads
Output meter reading to indicate .5 watts output - - - - - - - - - - - - - - - -	1.3 volts
Average sensitivity in microvolts for .5 watts output - - - - - - - - - - -	See chart below
Dummy antenna value to be in series with generator output - - - - - - - - -	See chart below
Connection of generator output lead -	See chart below
Generator modulation percentage -	30%
Position of volume control -	Fully clockwise
Position of tone control -	Fully clockwise

WAVE BAND SWITCH POSITION	POSITION OF DIAL POINTER	GENERATOR FREQUENCY	DUMMY ANTENNA	GENERATOR CONNECTION	TRIMMERS ADJUSTED (IN ORDER SHOWN)	MICROVOLTS
"A"	-	262 kc	.1 mfd.	6A7 Grid	T2, T1	-
-	To fall on center line of dial when variable is fully meshed.	-	-	-	-	-
"A"	1500 kc	1500 kc	.0008 mfd.	Antenna Terminal	C6, C2, C1	40
"A"	600 kc (rock)	600 kc	.0008 mfd.	Antenna Terminal	C7	40
"B"	6 mc	6 mc	400 ohms	Antenna Terminal	C8	-
"B"	6 mc (rock)	6 mc	400 ohms	Antenna Terminal	C4	25
"P"	15 mc (rock)	15 mc	400 ohms	Antenna Terminal	C5	30
"P"	7 mc	7 mc	400 ohms	Antenna Terminal	Loop at bracket end of L5	60

IMAGE ADJUSTMENT

Set the generator to 1524 kc and tune in the signal image at about 1000 kc on the receiver. The generator should be adjusted for high output (.1 volts). There is a lead running from L1 through a hole in the chassis to the wave switch. Adjust the position of this lead under the chassis for minimum image response.

IMPORTANT ALIGNMENT NOTES

Where indicated by the word, "rock", the variable should be rocked back and forth a degree or two while making the adjustment.

It is advisable to repeat the entire alignment procedure band by band and in the original order to insure greater accuracy.

Always keep the output from the test oscillator at its lowest possible value. As the sensitivity is increased by alignment, the generator output should be reduced correspondingly

After the alignment procedure has been completed, tune in a broadcast signal at about 1000 kc. If necessary shift the dial pointer so that it indicates this frequency.

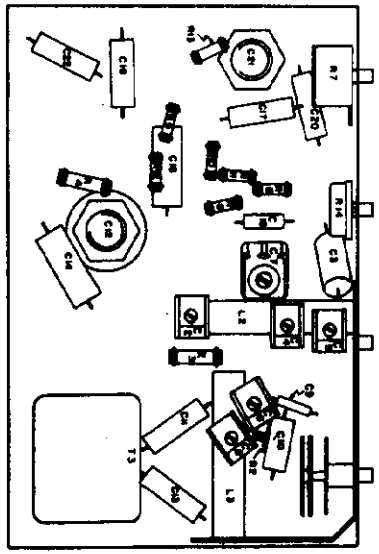

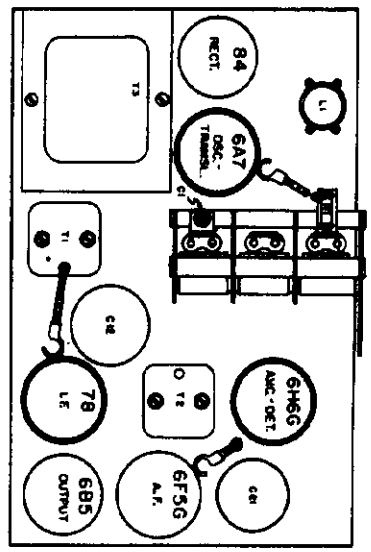

©John F. Rider, Publisher

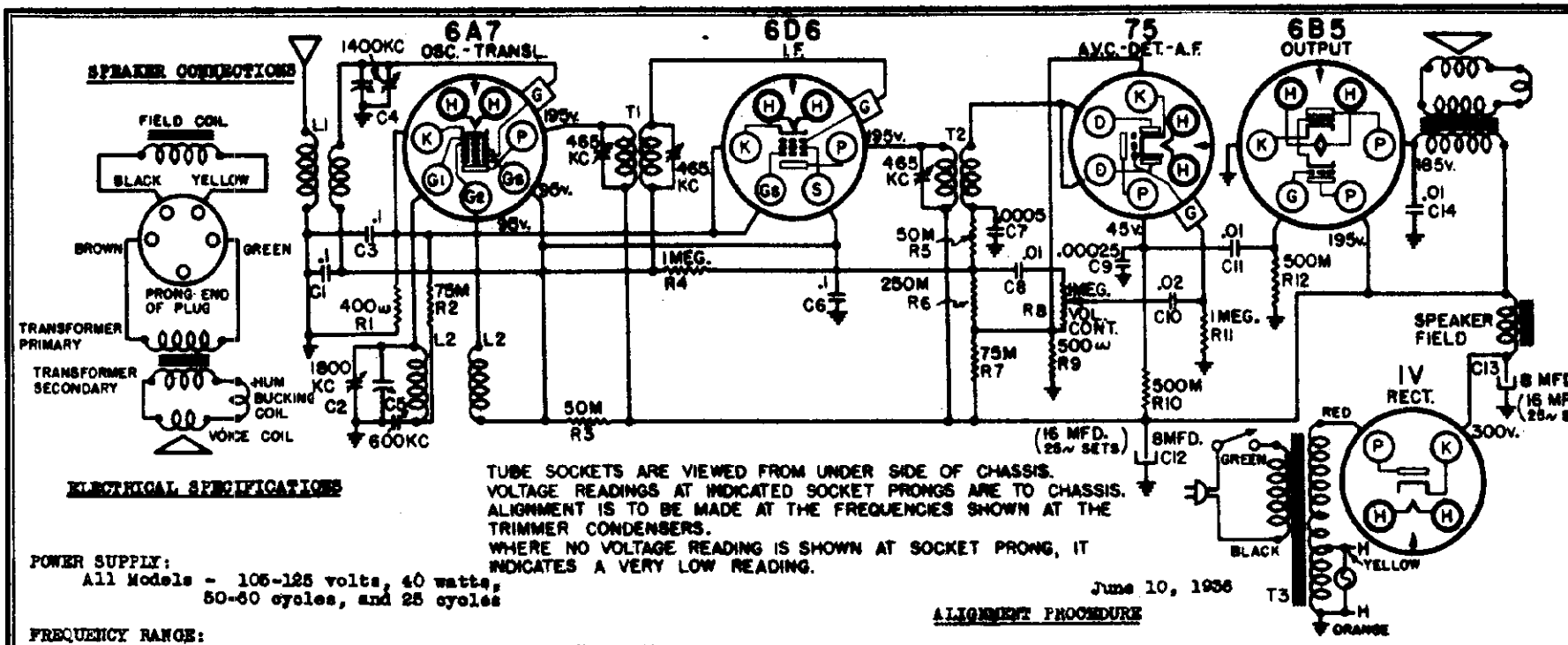

TUBE SOCKETS ARE VIEWED FROM UNDER SIDE OF CHASSIS.
VOLTAGE READINGS AT INDICATED SOCKET PRONGS ARE TO CHASSIS.
ALIGNMENT IS TO BE MADE AT THE FREQUENCIES SHOWN AT THE TRIMMER CONDENSERS.
WHERE NO VOLTAGE READING IS SHOWN AT SOCKET PRONG, IT INDICATES A VERY LOW READING.

June 10, 1936

ELECTRICAL SPECIFICATIONS

POWER SUPPLY:
All Models - 105-125 volts, 40 watts, 50-60 cycles, and 25 cycles

FREQUENCY RANGE:
Broadcast - - - - - - - - 545-1800 kc

ALIGNMENT FREQUENCIES:
1800 kc - - - - (oscillator trimmer)
1400 kc - - - - (translator trimmer)
600 kc - - - - (oscillator padder)

INTERMEDIATE FREQUENCY - - - - - - - 465 kc

LOUD SPEAKER:
Type - - - - - - - - - - - - - Dynamic
Size - - - - - - - - - - - - - 8 inch
Field resistance - - - - - 1950 ohms

POWER OUTPUT:
Type - - - - - - - - - - - dual triode
Undistorted - - - - - - - - 1.15 watts
Maximum - - - - - - - - - - 3.7 watts

OPERATING FEATURES:
Dial calibrated in kc and in meters.

CHASSIS FEATURES:
Number RF stages - - - - - - - - None
Number IF stages - - - - - - - - One
Number condensers in gang - - - Two
Antenna - - - - - - - - - - conventional

ALIGNMENT PROCEDURE

PRELIMINARY:

Output meter connections - - - - - - - - - - - - - - - - - Connect meter across voice coil.

Output meter reading to indicate .5 watts output - - - - - - - - - - - - - - - - - 1.2 volts

Average sensitivity in microvolts for .5 watts output - - - - - - - - - - See chart below

Generator ground lead connection - Receiver chassis

Dummy antenna value to be in series with generator output - - - - - - - - See chart below

Connection of generator output lead - See chart below

Position of volume control - All the way on

POSITION OF VARIABLE	GENERATOR FREQUENCY	DUMMY ANTENNA	GENERATOR CONNECTION	TRIMMERS ADJUSTED (IN ORDER SHOWN)	MICROVOLTS
-	465 kc	.1 mfd.	6A7 Grid	T2,T1	-
Completely open	1800 kc	.0002 mfd.	Antenna Lead	C2	-
1400 kc	1400 kc	.0002 mfd.	Antenna Lead	C4	100
600 kc (rock)	600 kc	.0002 mfd.	Antenna Lead	C5	70

©John F. Rider, Publisher

MODELS 1988,4401,4402
4461,4462
Socket,Trimmers,Notes
Chassis

SEARS-ROEBUCK & CO.

Parts may be secured direct from the Colonial Radio Corp., 254 Ranco Street, Buffalo, New York.

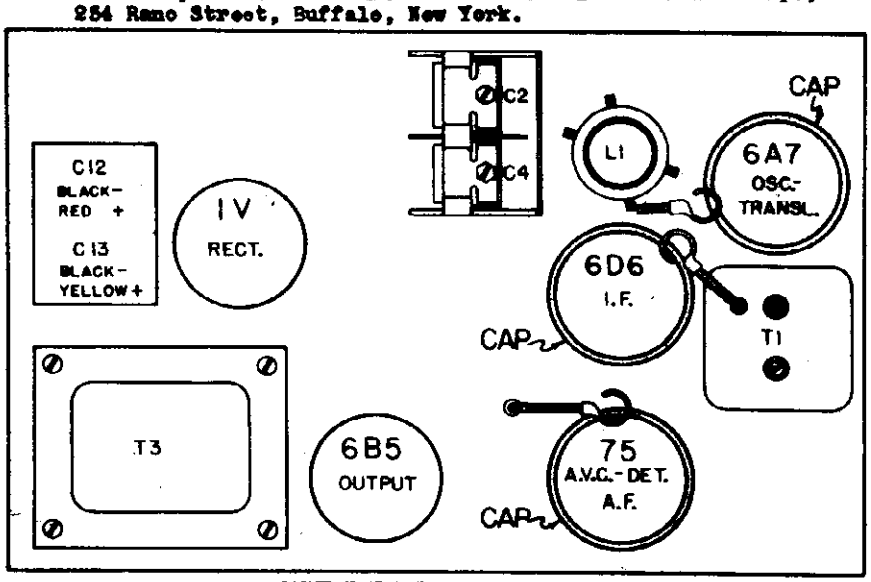

LOCATIONS OF PARTS ON TOP OF CHASSIS

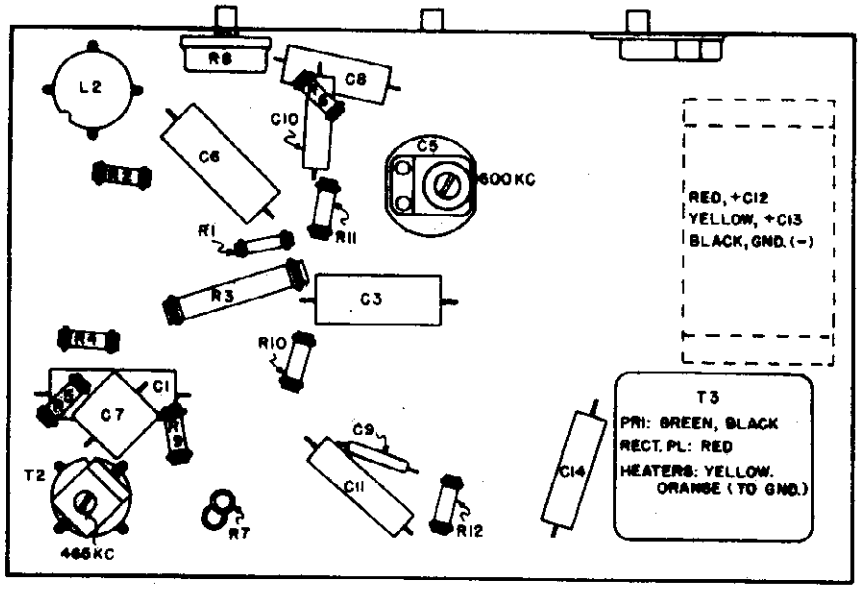

LOCATIONS OF PARTS UNDER CHASSIS

SUBJECT: ELIMINATING WHISTLE AT 930 KC:

A whistle, due to a beat between the second harmonic (930 kc) of the 465 kc IF, and a 930 kc signal may be experienced. In localities where the 930 kc station is one that is frequently listened to, it will be desirable to shift the whistle to some other point where it will not be objectionable. This can be done by shifting the IF frequency of the receiver.

Determine at what point between 900 kc and 960 kc the whistle will be least objectionable. Dividing this frequency by two will give the new IF frequency to which the receiver should be aligned. For example, if it is determined that a whistle at 915 kc would not be objectionable, the IF should be realigned at 915/2 or 457.5 kc.

Align the IF at the new frequency and then realign the rest of the receiver as described in Service Instructions #57EM 8 for this receiver.

ELECTROLYTIC CONDENSERS IN AC-DC MODELS:

The 25 cycle models use 15 mfd. wet electrolytic condensers, C12 and C13, instead of the dual dry electrolytic used in the 60 cycle models.

SUBJECT: WAVE-TRAP TO ELIMINATE INTERFERENCE FROM SHIP OR AIRPORT TRANSMITTERS

In locations near ship transmitters or airports or air beacon stations, code interference may be experienced. Part #10131142S6 wave-trap is designed to eliminate such interference. It can be ordered from Colonial Radio Corporation, 254 Ranco Street, Buffalo, N. Y. Use Purchase Order blank, form F5284. The retail selling price is $1.00.

INSTALLATION OF THE TRAP:

Mount the trap, by means of two wood screws, at any convenient place on the chassis shelf or cabinet where it will be near the antenna terminal of the receiver. Connect the yellow lead of the wave-trap to the antenna downlead. Splice the green lead of the wave-trap to the green antenna lead of the receiver. Cut off any excess length of wire from the trap and from the chassis antenna lead so that the green lead from the wave trap to the chassis is as short as possible. The yellow lead from the wave-trap should be run so that it is as far as possible from the green lead. Splice one of the black leads from the wave-trap to the black ground lead of the receiver. Connect the other wave-trap black lead to the ground used for the installation.

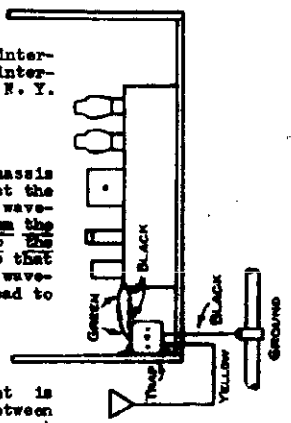

ADJUSTMENT OF THE TRAP:

The trap is pre-tuned to the IF frequency so that normally no further adjustment is necessary. However, should interference still be experienced, tune the receiver between approximately 550 and 600 kc. Then adjust the wave-trap, by means of the trimmer screw at the bottom of the container, until the interference is eliminated. Addition of the trap will reduce the sensitivity of the receiver around 600 kc by approximately 50%. The customer should be forewarned of this to avoid complaints of reduced sensitivity.

©John F. Rider, Publisher

Alignment, Sensitivity

SEARS-ROEBUCK & CO.

MODELS 1989, 4408, 4420, 4520
Schematic, Voltage

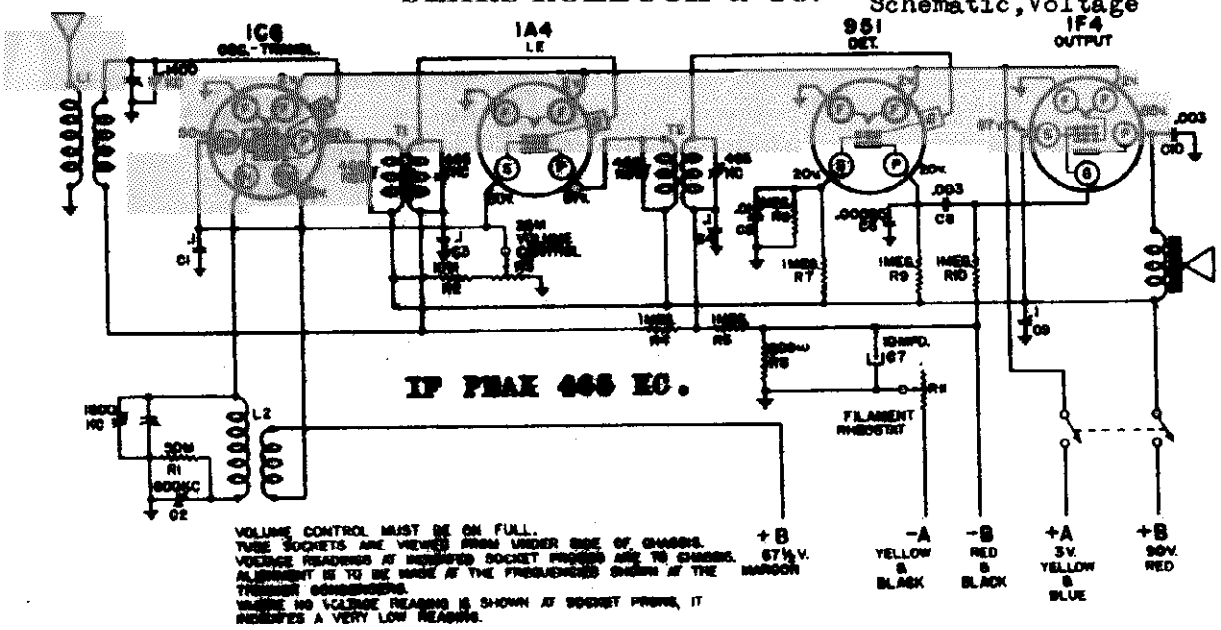

VOLUME CONTROL MUST BE ON FULL.
TUBE SOCKETS ARE VIEWED FROM UNDER SIDE OF CHASSIS.
VOLTAGE READINGS AT INDICATED SOCKET PRONGS ARE TO GROUND.
ALIGNMENT IS TO BE MADE AT THE FREQUENCIES SHOWN AT THE TRIMMER CONDENSERS.
WHERE NO VOLTAGE READING IS SHOWN AT SOCKET PRONG, IT INDICATES A VERY LOW READING.

ALIGNMENT PROCEDURE

PRELIMINARY **Parts may be secured direct from the Colonial Radio Corp., 254 Rano Street, Buffalo, New York.**

Output meter connections - - - - - - - - 4000 ohm meter, in series with a .5 mfd. condenser, across speaker terminals.

Output meter reading to indicate 50 milliwatts - - - - - - - - - - - - - - - - - - - 8.5 volts

Generator ground lead connection - Receiver chassis

Dummy antenna value to be in series with generator output - - - - - - - - - See chart below

Connection of generator output lead - See chart below

Position of volume control - On full

Position of power economizer - - - - - - - - - - - - - - - to give two volts at tube filaments

GENERATOR FREQUENCY	DUMMY ANTENNA	GENERATOR CONNECTION	TRIMMERS ADJUSTED	POSITION OF VARIABLE
465 kc	.1 mfd.	1A4 Grid	T2	-
465 kc	.1 mfd.	1C6 Grid	T1	-
1500 kc	.0002 mfd.	Antenna Lead	V1	Completely open
1400 kc	.0002 mfd.	Antenna Lead	V2	1400 kc (rock)
600 kc	.0002 mfd.	Antenna Lead	C2	600 kc (rock)

SUBJECT: APPROXIMATE AVERAGE SENSITIVITY IN MICROVOLTS FOR 50 MILLIWATTS OUTPUT:

The generator connections and the receiver settings are to be as described in Service Instructions #87RL 7, for this model. The generator modulation is to be 30% at 400 cycles.

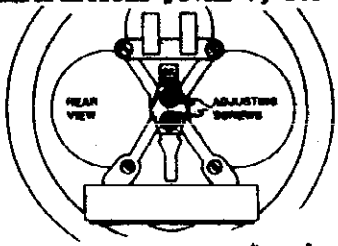

Rear View of Speaker

Frequency	Microvolts
600 kc	80
1000 kc	85
1400 kc	100
1600 kc	200
1750 kc	380

8500 microvolts, at IF grid, with variable closed and .1 mfd. dummy antenna.

150 microvolts, at translator grid, with variable closed and .1 mfd. dummy antenna.

©John F. Rider, Publisher

MODELS 1989,4408,4420,4520
Trimmers,Chassis,Data

SEARS-ROEBUCK & CO.

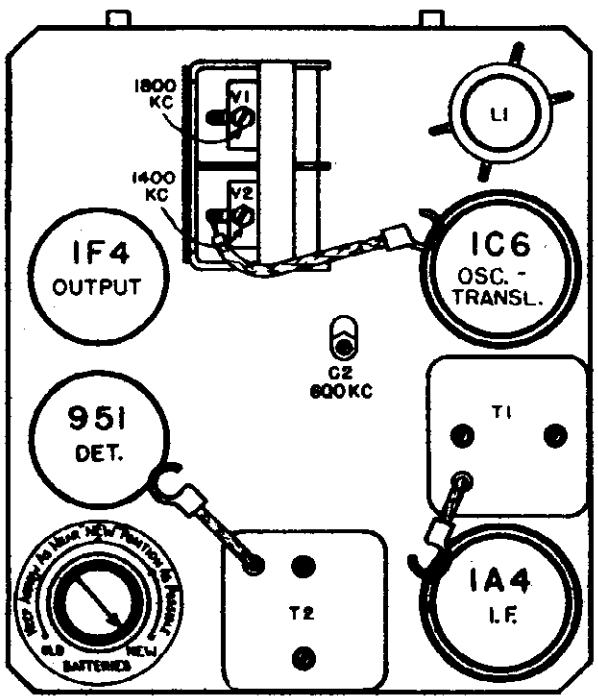

LOCATIONS OF PARTS ON TOP OF CHASSIS - MODEL 101414

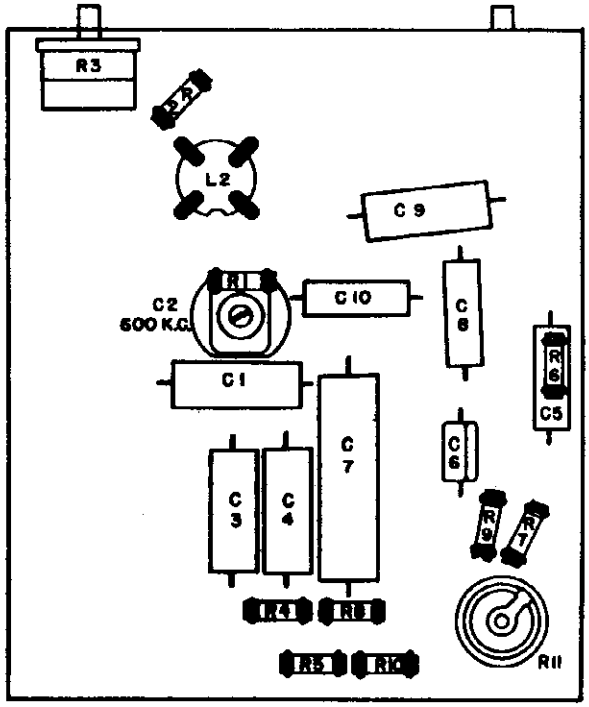

LOCATIONS OF PARTS UNDER CHASSIS - MODEL 101414

ELECTRICAL SPECIFICATIONS

POWER SUPPLY:
"A" Battery (Dry) - - - - - 1 - #5023P
"B" Batteries - - - - - - - 2 - #5503P
"A" Drain - - - - - - - - - -.36 amperes
"B" Drain - - - - - - - - - - -15 ma
For 2 VOLT STORAGE "A" - - - - - - - 1 - #734

ALIGNMENT FREQUENCIES:
1800 kc - - - - - (oscillator trimmer)
1400 kc - - - - - (translator trimmer)
600 kc - - - - - (oscillator padder)

FREQUENCY RANGE:
Broadcast - - - - - - - - - 540-1800 kc

INTERMEDIATE FREQUENCY - - - - - - - - 465 kc

LOUD SPEAKER:
Type - - - - - - - - - - - - - -Magnetic
Size - - - - - - - - - - - - - - 6 inch
DC resistance - - - - - - - - -1000 ohms

POWER OUTPUT:
Type - - - - - - - - - - - - Single Pentode
Undistorted- - - - - - - - - - -.25 watts
Maximum - - - - - - - - - - - - .5 watts

OPERATING FEATURES:
Dial calibrated in kc and in meters.

GENERAL INFORMATION

ADJUSTMENT OF POWER ECONOMIZER:

A series filament rheostat, termed a POWER ECONOMIZER, is mounted on the top rear of the chassis. The arrow of the knob should always be kept as near the "NEW" position as possible, consistent with satisfactory reception This will result in greater life for the batteries and the tubes. As the batteries grow older and reception becomes poorer it will be necessary to turn the knob toward the "OLD" position to compensate. When the knob must be turned all the way to the "OLD" position the "A" battery is exhausted and should be replaced.

NOTE: ECONOMIZER SHOULD BE IN "OLD" POSITION AT ALL TIMES WHEN USING 2 VOLT STORAGE BATTERY.

SUBJECT: ELIMINATING WHISTLE AT 930 KC:

A whistle, due to a beat between the second harmonic (930 kc) of the 465 kc IF, and a 930 kc signal may be experienced. In localities where the 930 kc station is one that is frequently listened to, it will be desirable to shift the whistle to some other point where it will not be objectionable. This can be done by shifting the IF frequency of the receiver.

Determine at what point between 900 kc and 960 kc the whistle will be least objectionable. Dividing this frequency by two will give the new IF frequency to which the receiver should be aligned. For example, if it is determined that a whistle at 915 kc would not be objectionable, the IF should be realigned at 915/2 or 457.5 kc.

Align the IF at the new frequency and then realign the rest of the receiver as described in Service Instructions #57RL 7 for this receiver.

SPEAKER ADJUSTMENT

There are two adjusting screws at the rear of the speaker, as shown in the illustration. Speaker rattle can be corrected by turning these screws. Tighten one and loosen the other slightly until the rattle is eliminated.

©John F. Rider, Publisher

SEARS-ROEBUCK & CO.

MODEL 1992X
Schematic, Voltage
Trimmers

Parts may be secured direct from the Sentinel Radio Corp.,
2222 Diversey Parkway, Chicago, Illinois.

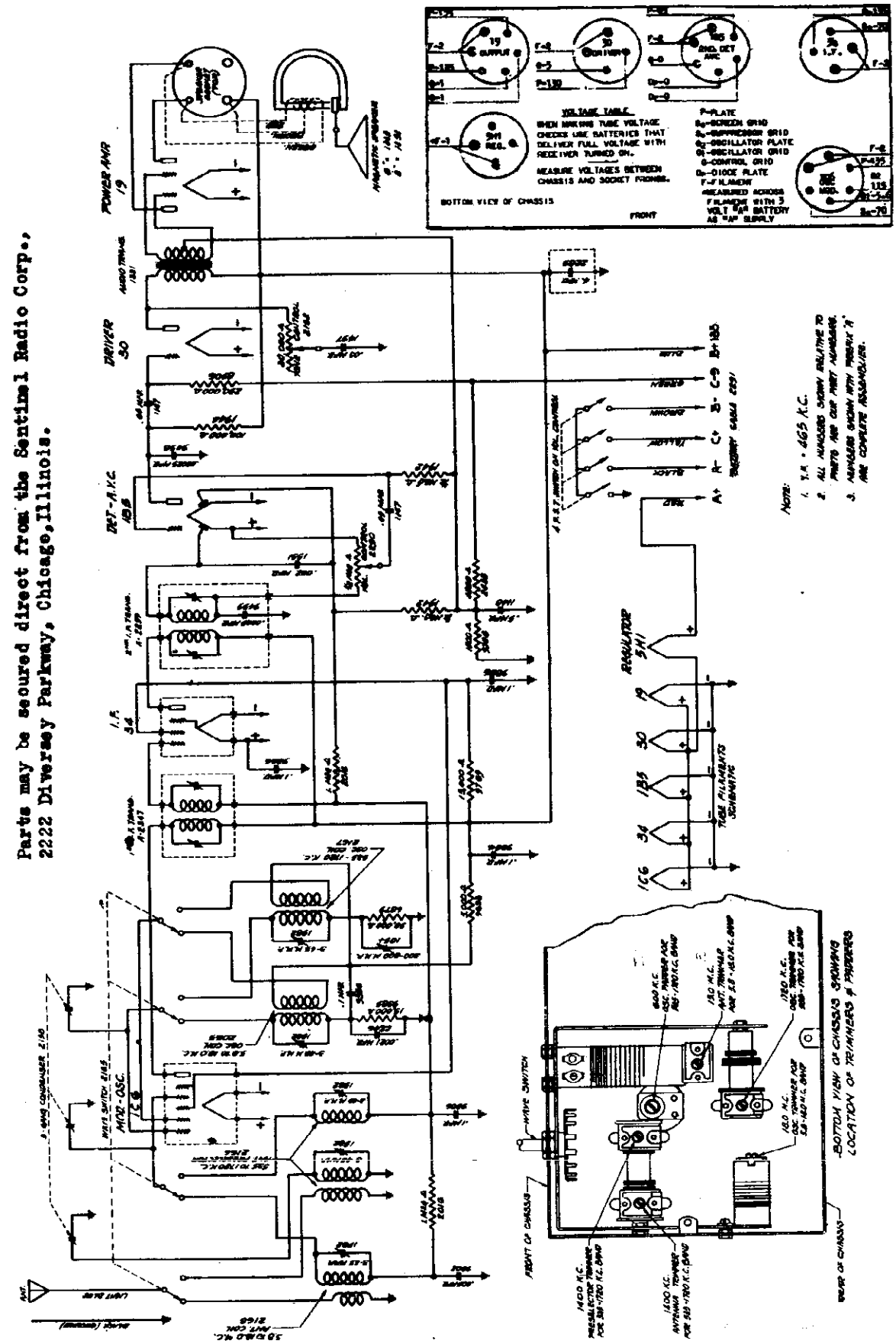

IF PEAK 456 KC.

FOR ALIGNMENT SEE INDEX

©John F. Rider, Publisher

MODEL 1993X
Schematic
Voltage, Trimmers

SEARS-ROEBUCK & CO.

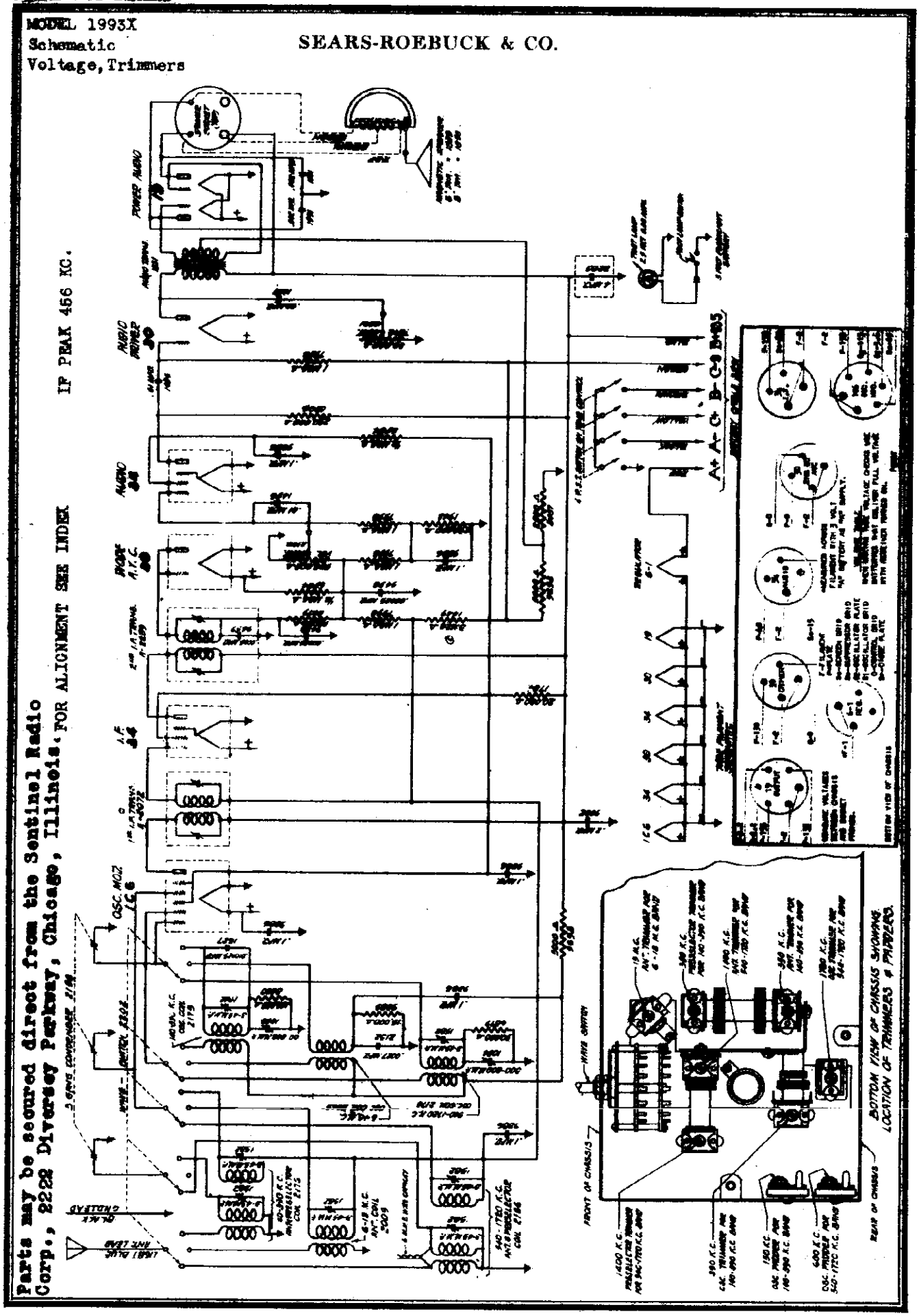

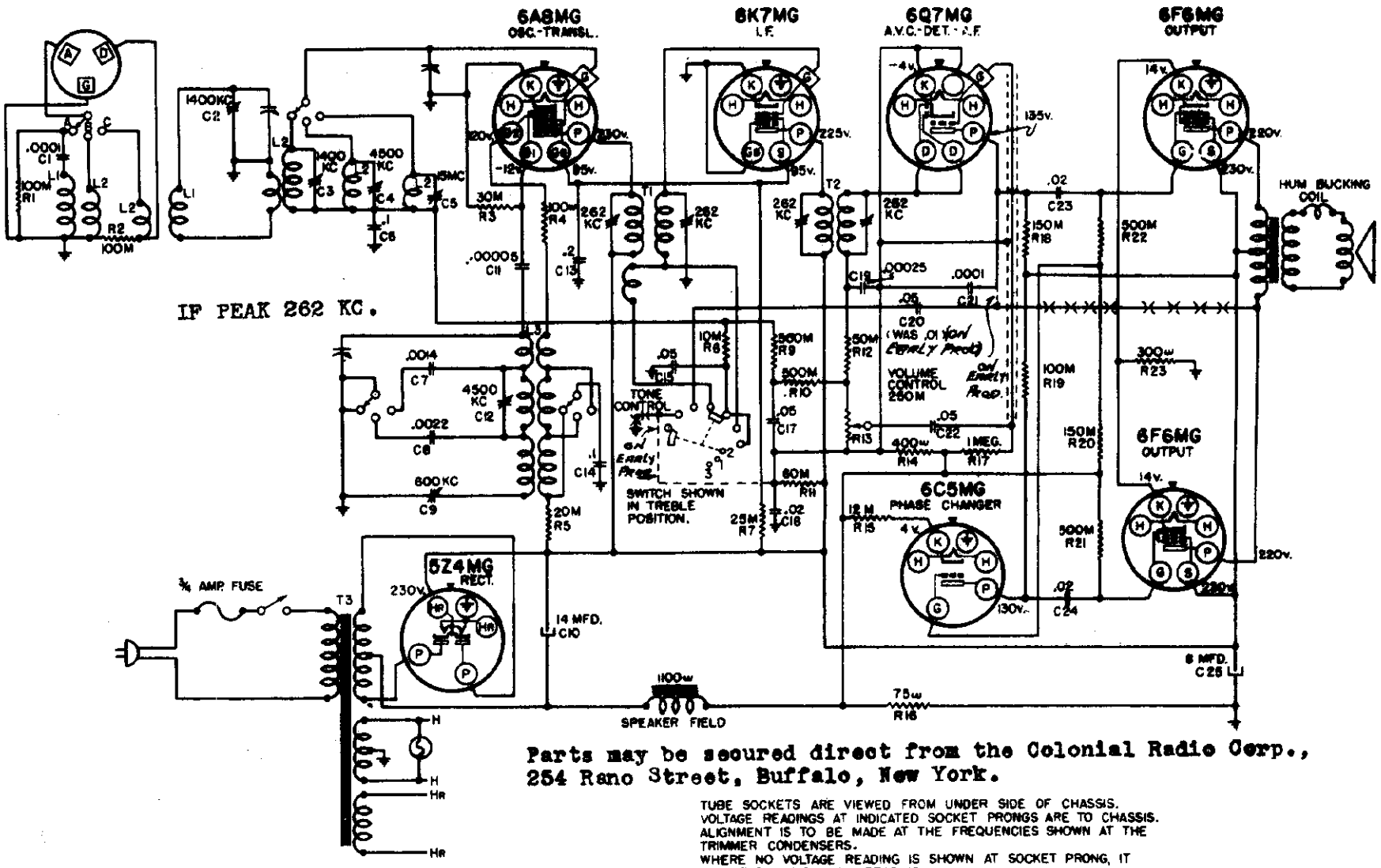

Parts may be secured direct from the Colonial Radio Corp., 254 Rano Street, Buffalo, New York.

TUBE SOCKETS ARE VIEWED FROM UNDER SIDE OF CHASSIS.
VOLTAGE READINGS AT INDICATED SOCKET PRONGS ARE TO CHASSIS.
ALIGNMENT IS TO BE MADE AT THE FREQUENCIES SHOWN AT THE TRIMMER CONDENSERS.
WHERE NO VOLTAGE READING IS SHOWN AT SOCKET PRONG, IT INDICATES A VERY LOW READING.

APRIL 21, 1936

MODEL 1998 *EARLY & LATE*

CIRCUIT CHANGES TO ELIMINATE HUM WHEN TONE CONTROL IS IN BASS POSITION. (C20 & TONE CONTROL SWITCH)
DOTTED LINES SHOW CIRCUIT BEFORE CHANGE WAS MADE.

SEARS-ROEBUCK & CO.

MODEL 1998, Early, 1[illegible]
Schematic
Voltage

SEARS PAGE 75

MODEL 1998
Early,Late
Alignment,Chassis
Sensitivity,Changes

SEARS-ROEBUCK & CO.

C1, L1, R1, R15, T1, T2, T3 ARE MOUNTED ON TOP OF THE CHASSIS.

CIRCUIT CHANGES TO REMOVE HUM WHEN TONE CONTROL IS IN BASS POSITION

1. Remove the .01 condenser, C80, which is connected from the triode plate of the 6SN7 to a tie lug. (This tie lug connects to the Tone Control switch.)

2. Connect a .05 mfd 600 volt condenser (Part #29145) from the tie lug to the plate of the 6SN7 tube near the 25Z5 tube.

3. Remove the lead from the 6Q7GT cathode to the Tone Control switch.

4. Ground the switch lug from which this wire was removed to the ground lug of the broadcast antenna coil.

ELIMINATION OF A HAY-FRAU TO MAINTAIN YOUR INTERFERENCE

If the receiver is located near an airport that uses a transmitter operating on the same frequency of the receiver (258 kc), interference from the transmitter may be encountered.

To eliminate such interference a wave trap, part #114477 - $1.00, should be ordered from COLONIAL RADIO CORPORATION, 254 Rano Street, Buffalo, N. Y.

This trap may be mounted in any convenient place in the cabinet by means of two small wood screws. Adjust the trap so that the adjustment screw is accessible. Connect one lead of the trap (near the "G" terminal on the antenna terminal block at the rear of the) channels. The other lead of the trap is to be connected to the antenna leadin or doublet lead which originally was connected to the antenna terminal block.

Turn the Wave Band switch to the BROADCAST position and the Variable Condenser to approximately 550 kc. If interference is encountered, adjust the wave-trap with an insulated screw driver until the interfering signal is eliminated.

ALIGNMENT PROCEDURE

IF ALIGNMENT

1. Connections:

Connect the low side of the output meter across the loud speaker voice coil. Connect the ground lead of the test oscillator to the receiver chassis. Connect a .1 mfd condenser from the "hot" lead of the test oscillator to the "A" terminal of the antenna terminal block at the rear of the chassis. Connect a jumper between terminals "F" and "G" of the antenna terminal block at the rear of the chassis.

2. Receiver Settings:

Turn the Volume Control all the way on, the Tone Control to position "T", the Wave Band switch to the BROADCAST position, and the Station Selector to about 550 kc.

3. Alignment:

(a) Connect the test oscillator output lead (in series with the .1 mfd condenser) to the control grid of the 6SK7GT IF tube. Set the test oscillator to 455 kc and peak the IF output transformer, T6.

(b) Change the test oscillator output lead connection to the control grid of the 6SB8 translator tube and peak the IF input transformer, T5.

(c) Change the test oscillator output connection back to the 6SK7GT tube and repeat the IF output transformer adjustment. Then change the test oscillator connection to the 6SB8 tube and repeat the IF input transformer adjustment. Always keep the test oscillator output at its lowest possible value.

BROADCAST BAND "A" ALIGNMENT

1. Connections:

Remove the .1 mfd condenser from the output lead of the test oscillator. Connect a .005 mfd mica condenser between the test oscillator output lead and the "A" terminal of the antenna terminal block at the rear of the chassis. All other connections remain the same as for IF Alignment.

2. Receiver Settings:

Turn the Volume Control all the way on, the Tone Control to the "T" position, and the Wave Band switch to the "B" position, as for IF Alignment.

3. Alignment:

(a) Set the test oscillator to 1400 kc and tune in its signal. Peak the broadcast translator trimmer, C5, and the broadcast antenna trimmer, C8. The variable should be rocked a degree or two during the adjustment. The broadcast antenna trimmer is the one on the middle section of the variable condenser. For the location of all of the other trimmers see the Location of Parts diagram.

(b) Set the test oscillator to 600 kc and tune in its signal. Peak the broadcast oscillator padder, C9. The variable should be rocked a degree or two during the adjustment.

4. Dial Calibration:

Set the test oscillator to 900 kc and tune in its signal. If necessary, turn the dial pointer so that it reads 900 kc. Do not allow the variable condenser plates to turn while moving the dial pointer.

5. Image Adjustment:

Set the test oscillator to 1000 kc and tune in its signal. Adjust the test oscillator output to 10 microvolts and note the output meter reading. Leaving the set tuned to 1000 kc, change the test oscillator frequency to 1554 kc and increase its output to 100,000 microvolts. If necessary, slightly change the test oscillator frequency so that the image heard in the receiver will be loudest. Then note the output meter reading. It should not be greater than that noted with the test oscillator at 1000 kc. If it is greater, repeat the above procedure.

There is a yellow lead that runs from the Wave Band switch to C3. Note this lead until the lowest reading is had on the output meter. (With the test oscillator at 1554 kc and 100,000 microvolts and the receiver at 1000 kc.) When the yellow lead is properly positioned, should not be heard. Next, with the test oscillator at 1554 kc, adjust the image trimmer, C3, for minimum output meter reading and its output at 10 microvolts.

If it is found necessary to make the image adjustment, repeat the alignment procedure, since alignment may be slightly affected.

SHORT WAVE BAND "B" ALIGNMENT

1. Connections:

Remove the .0008 mfd mica condenser used in series with the test oscillator output lead for Broadcast alignment. In its stead connect a 400 ohm carbon resistor. All other connections remain the same as for Broadcast Band Alignment.

2. Receiver Settings:

Turn the Wave Band switch to the "B" position. Other receiver settings remain the same as for Broadcast Band Alignment.

3. Alignment:

(a) Turn the Station Selector knob so that the dial pointer reads exactly 4500 kc.

(b) Set the test oscillator to 4500 kc. Peak the oscillator trimmer, C16. (Be careful not to allow the Variable Condenser to turn during the operation.)

(c) Leave the test oscillator set at 4500 kc and peak the translator trimmer, C6. The variable should be rocked during this adjustment. Always keep the test oscillator output at its lowest possible value.

SHORT WAVE BAND "C" ALIGNMENT

1. Connections:

Connections remain the same as for band "B" alignment.

2. Receiver Settings:

Turn the Wave Band switch to the "C" position. Other receiver settings remain the same as for band "B" alignment.

3. Alignment:

(a) Set the test oscillator to 15,000 kc and tune in its signal. Adjust the trimmer, C6. The variable should be rocked during the adjustment.

SENSITIVITY

The following figures are given as an indication of the approximate sensitivities that should be had at various settings of the receiver. It is necessary to have a test oscillator with an accurately calibrated attenuator so that its power output can be known. The output meter is to be connected across the loud speaker voice coil. An output meter reading of 1 volt should be obtained for each of the input voltages shown for the frequencies listed.

The Volume Control of the receiver must be all the way on and the Tone Control in its "T" position. Terminals "F" and "G" on the antenna terminal block are to be connected together with a jumper. The ground lead of the test oscillator is to be connected to the "A" terminal of the antenna terminal block. In series with the output lead is a .005 mfd mica condenser for Broadcast Band measurements and a .1 mfd condenser for the two Short Wave bands. A 400 ohm carbon resistor used instead for the .005 mfd condenser.

	Frequency	Microvolts Input
Broadcast Band	600 kc	35
	1000 kc	30
	1400 kc	33
Band "B"	1500 kc	50
	2800 kc	45
	3500 kc	30
	4500 kc	30
Band "C"	5000 kc	70
	10,000 kc	50
	15000 kc	35

The Fuse:

There is a 3/4 ampere fuse at the rear of the chassis, under the cover marked, "Fuse". A spare fuse is contained in the envelope tacked to the inside of the cabinet. Be sure to remove the power supply cord from the receptacle before replacing the fuse. Should the receptive tube will cause the fuse to blow. Repeated blowing of the fuse indicates a fault that should be corrected before making further fuse replacements. Use none but a 3/4 ampere fuse for replacement.

Antenna And Ground Connections:

This receiver is designed for use with either a conventional type of antenna or a Doublet Antenna. There is a terminal block at the rear of the chassis. When a conventional antenna is used, its lead-in is to be connected to the terminal marked, "A", on the terminal block. A good ground should be connected to the terminal marked, "G". It is recommended that it can be clamped under terminals "F" and "G".

When a Doublet Antenna is used, one wire of its twisted downlead is to be connected under the terminal marked, "A", and the other wire under the terminal marked, "F". Either downlead wire may be connected to either terminal. The ground connection is made to the terminal marked, "G". Where a single length of wire is used for a Doublet Antenna it is recommended as giving very much better, noise-free short wave reception.

©John F. Rider, Publisher

Schematic, Voltage, Data.
Sensitivity.

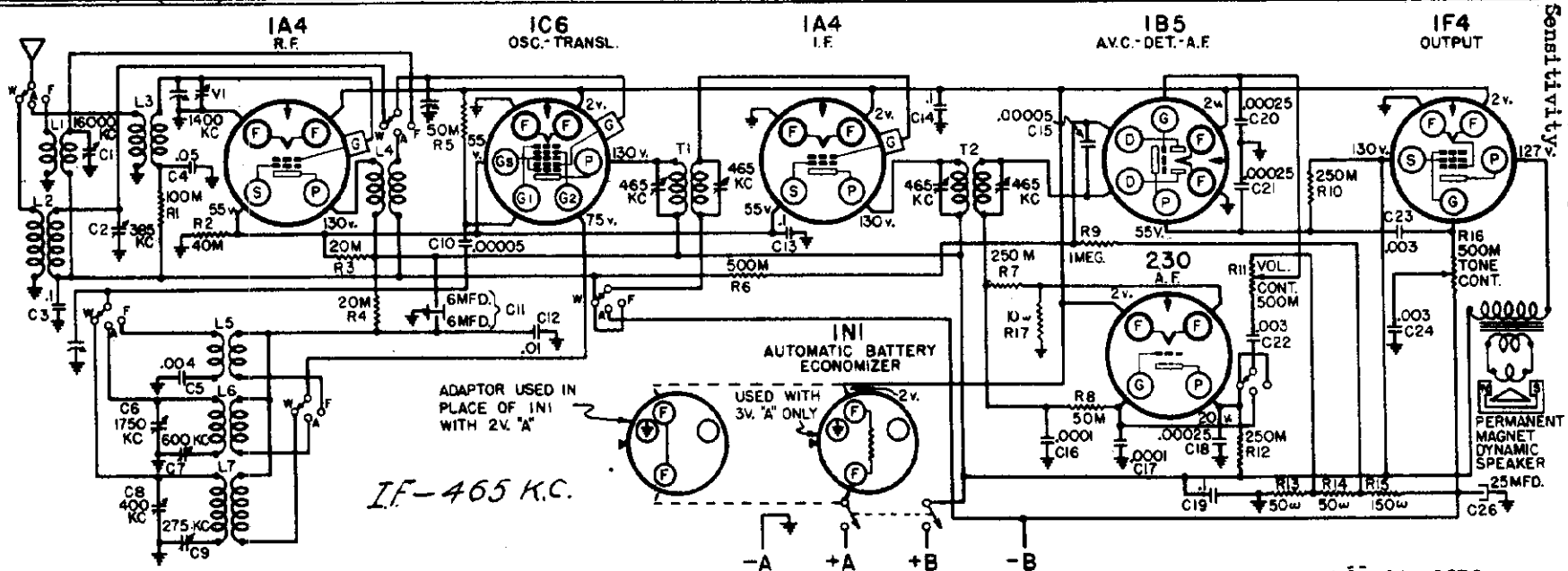

TUBE SOCKETS ARE VIEWED FROM UNDER SIDE OF CHASSIS.
VOLTAGE READINGS AT INDICATED SOCKET PRONGS ARE TO CHASSIS.
ALIGNMENT IS TO BE MADE AT THE FREQUENCIES SHOWN AT THE TRIMMER CONDENSERS.
WHERE NO VOLTAGE READING IS SHOWN AT SOCKET PRONG, IT INDICATES A VERY LOW READING.

July 24, 1936

SUBJECT: APPROXIMATE AVERAGE SENSITIVITY IN MICROVOLTS FOR 50 MILLIWATTS OUTPUT:

Band	Frequency	Microvolt
"W"	275 kc	80
"W"	385 kc	60
"A"	600 kc	30
"A"	1000 kc	30
"A"	1400 kc	25
"P"	6 mc	90
"P"	9 mc	75
"P"	14 mc	70
"P"	16 mc	60

POWER SUPPLY:
"A" Battery (three volt) - 1 - #5502P
"A" Battery (two volt) - - - 1 - #734
"B" Batteries - - - - - - - 3 - #5503P

"A" Drain - - - - - - - - - .48 amperes
"B" Drain - - - - - - - - - - 20 ma

FREQUENCY RANGES:
Band "A" - - - - - - - - - 540-1750 kc
Band "W" - - - - - - - - - 220-400 kc
Band "P" - - - - - - - - - 5.6-17.4 kc

ALIGNMENT FREQUENCIES:

	Oscillator Trimmer	Antenna Trimmer	Padder
Band "A"	1750 kc	1400 kc	600 kc
Band "W"	400 kc	385 kc	275 kc
Band "P"	None	16 mc	Fixed

INTERMEDIATE FREQUENCY - - - - - - - - - -

MODELS 4404,4406,4424
4444,4524,4544
3-Volt Models

SEARS-ROEBUCK & CO.

MODELS 4410,4411,4425,4445
2-Volt Models
Socket,Trimmers,Chassis
Alignment

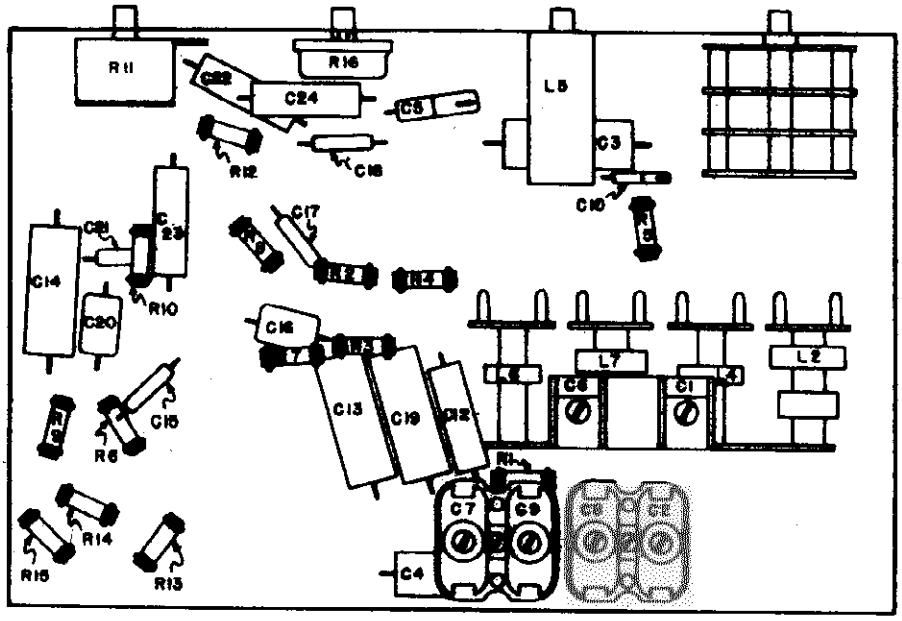

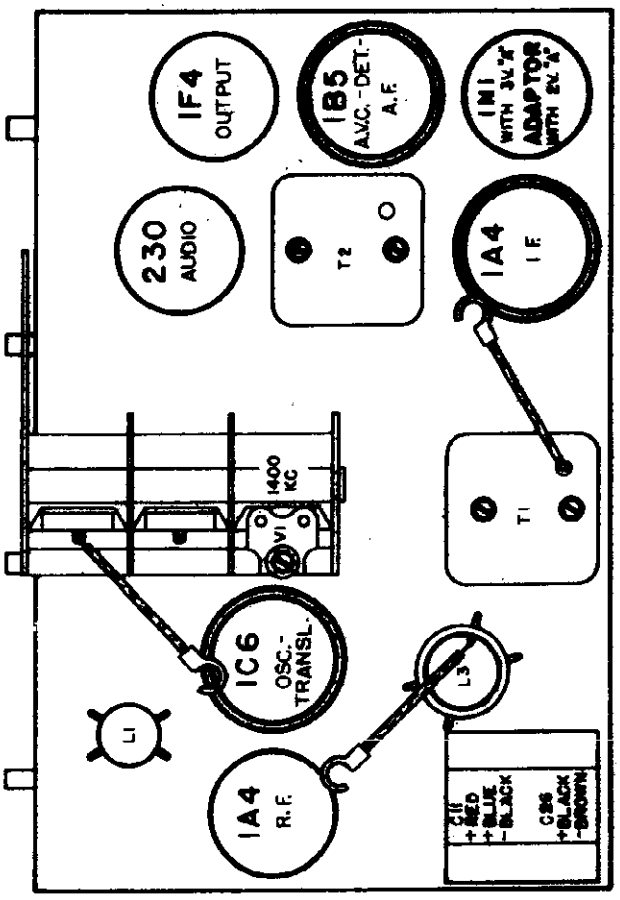

ALIGNMENT PROCEDURE

Output meter connection ---------- Across speaker voice coil.
Output meter reading to indicate 50 milliwatts ---------- .47 volts
Generator ground lead connection ---------- Receiver chassis
Dummy antenna value to be in series with generator output ---------- See chart below
Connection of generator output lead ---------- See chart below
Position of volume control ---------- All the way on
Position of tone control ---------- Fully clockwise

BAND	POSITION OF SWITCH	GENERATOR FREQUENCY	DUMMY ANTENNA	GENERATOR CONNECTION	TRIMMER ADJUSTMENTS (IN ORDER GIVEN)
"A"	-	465 kc	.1 mfd.	106 Grid	59,51
"A"	Fully open	1720 kc	.0002 mfd.	Antenna Lead	66
"A"	1400 kc	1400 kc	.0002 mfd.	Antenna Lead	71
"A"	600 kc (peak)	600 kc	.0002 mfd.	Antenna Lead	67
"B"	Fully open	600 kc	.0002 mfd.	Antenna Lead	66
"B"	215 kc	215 kc	.0002 mfd.	Antenna Lead	62
"B"	574 kc (peak)	574 kc	.0002 mfd.	Antenna Lead	69
"B"	16 mc (peak)	16 mc	400 ohms	Antenna Lead	61

IMPORTANT ALIGNMENT NOTE

Alignment must be made in this sequence:

1: IF
2: Broadcast Band ("A")
3: Weather Band ("B")
4: Short Wave Band ("B")

The 1400 kc and 600 kc adjustments for the "A" band should be repeated for greater accuracy.

The complete alignment procedure for band "B" should be repeated two or three times for greater accuracy.

Always keep the output from the signal generator at its lowest possible value.

After the alignment procedure has been completed, tune in a signal of about 1600 kc and set the dial pointer to that frequency.

The receiver should go to 17,600 kc on band B. If it fails to do so, move the oscillator plate and grid leads into the clear, to reduce distributed capacity. The receiver then will have the proper frequency coverage.

©John F. Rider, Publisher

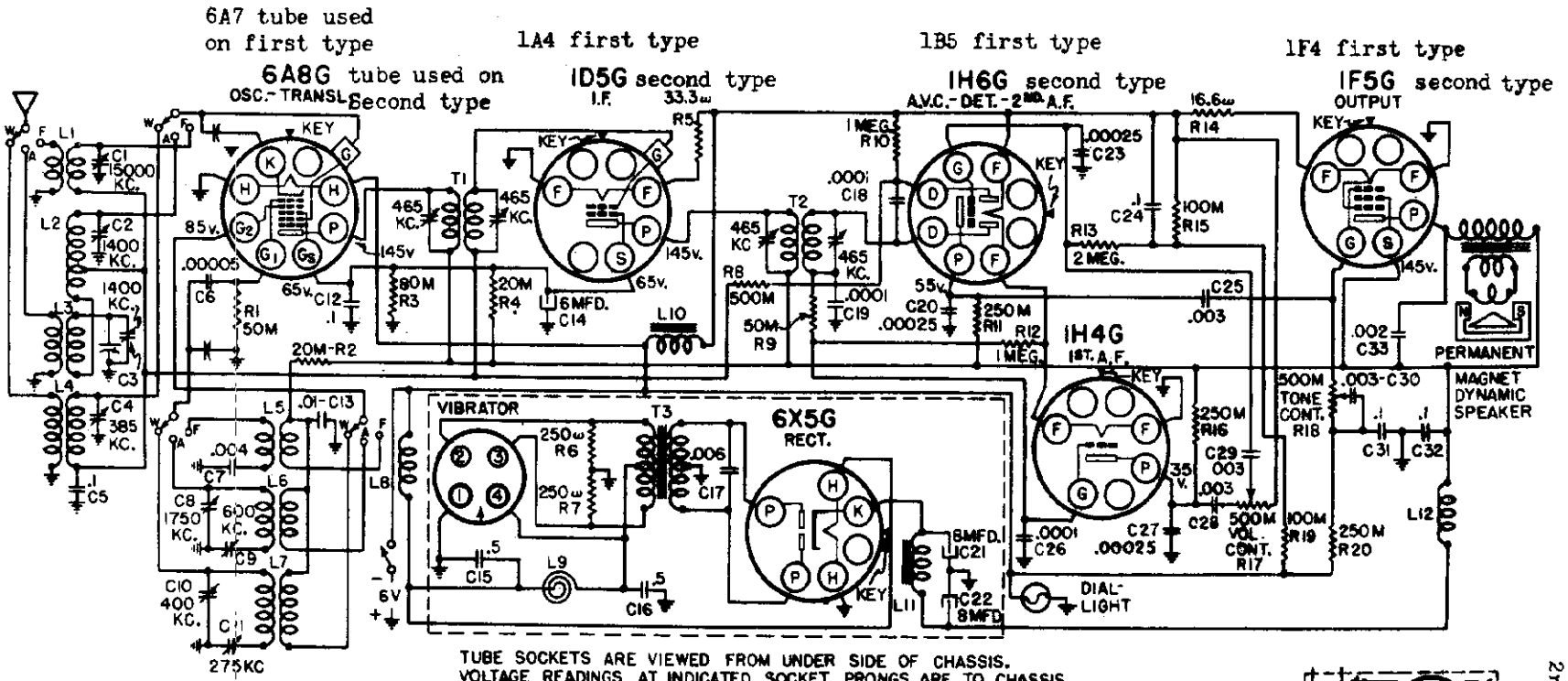

TUBE SOCKETS ARE VIEWED FROM UNDER SIDE OF CHASSIS.
VOLTAGE READINGS AT INDICATED SOCKET PRONGS ARE TO CHASSIS.
ALIGNMENT IS TO BE MADE AT THE FREQUENCIES SHOWN AT THE TRIMMER CONDENSERS.
WHERE NO VOLTAGE READING IS SHOWN AT SOCKET PRONG, IT INDICATES A VERY LOW READING.

INTERMEDIATE FREQUENCY - - 465 kc

June 17, 1936

POWER SUPPLY:
Six volt storage battery

Battery drain - - - - - - - 2.1 amperes

FREQUENCY RANGES:

Band "A"	540-1750 kc
Band "W"	220-400 kc
Band "P"	5.6-17.5 mc

POWER OUTPUT:

Type	Single Pentode
Undistorted	.4 watts
Maximum	.9 watts

OPERATING FEATURES:

Fidelity range - -	40 - 5000 cycles
Variable Tone Control	
Automatic Volume Control	

ALIGNMENT FREQUENCIES:

	Oscillator Trimmer	Antenna Trimmer	Padder
Band "A"	1750 kc	1400 kc	600 kc
Band "W"	400 kc	385 kc	275 kc
Band "P"	17.5 mc	15 mc	Fixed

LOUD SPEAKER:

Type - - -	Permanent Magnet Dynamic
Size - - - - - - - -	6", table models; 8", console models

CHASSIS FEATURES:

Number RF stages - - - - - - - -	None
Number IF stages - - - - - - - -	One
Number condensers in gang - -	Three
Antenna - - - - - - - - -	conventional

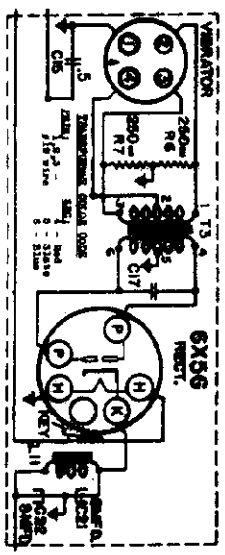

SEARS-ROEBUCK & CO.

MODELS 4405, 4407, 4425, 4448, 4548

Two Types
Schematic, Voltage, Data

1st Type - Glass Tubes
2nd Type - Octal Base Tubes

SEARS PAGE T-5

Parts may be secured direct from the Colonial Radio Corp 254 Rano St. Buffalo, N.Y.

MODELS 4405,4407,4428
4448,4548

SEARS-ROEBUCK & CO.

Two Types
Chassis,Socket,Trimmers
Alignment

ALIGNMENT PROCEDURE

PRELIMINARY:

Output meter connection ---------- Across speaker voice coil
Output meter reading to indicate 50 milliwatts ---------- .47 volts
Generator ground lead connection ---------- Receiver chassis
Dummy antenna value to be in series with generator output ---------- See chart below
Connection of generator output lead ---------- See chart below
Position of volume control ---------- All the way on
Position of tone control ---------- Fully clockwise

WAVE BAND SWITCH POSITION	POSITION OF VARIABLE	GENERATOR FREQUENCY	DUMMY ANTENNA	GENERATOR CONNECTION	TRIMMER ADJUSTMENTS (IN ORDER SHOWN)
"A"	-	465 kc	.1 mfd.	IF tube grid cap	T2
"A"	-	465 kc	.1 mfd.	Translator tube grid cap	T1
"A"	Fully open	1760 kc	.0002 mfd.	Antenna Lead	C8
"A"	1400 kc	1400 kc	.0002 mfd.	Antenna Lead	C5,C2
"A"	600 kc (Do not rock)	600 kc	.0002 mfd.	Antenna Lead	C9
"B"	Fully open	400 kc	.0002 mfd.	Antenna Lead	C10
"B"	585 kc	585 kc	.0002 mfd.	Antenna Lead	C4
"B"	975 kc (rock)	975 kc	.0002 mfd.	Antenna Lead	C11
"B"	Fully open	17.5 mc	400 ohms	Antenna Lead	*
"B"	15 mc	15 mc	400 ohms	Antenna Lead	C1

* Twist or untwist the blue and yellow leads on the short wave oscillator coil, L5,for maximum output meter reading.

IMPORTANT ALIGNMENT NOTES

Alignment must be made in this sequence:

1. IF
2. Broadcast Band ("A")
3. Weather Band ("B")
4. Short Wave Band ("B")

The 1400 kc and 600 kc adjustments for the "A" band should be repeated for greater accuracy. Do not rock the variable while making the 600 kc padder adjustment.

The complete alignment procedure for band "B" should be repeated two or three times for greater accuracy.

Always keep the output from the signal generator at its lowest possible value.

After the alignment procedure has been completed, tune in a signal of about 1000 kc and set the dial pointer to that frequency.

GENERAL INFORMATION

Two types of this model have been built. One uses conventional glass tubes. The other type uses octal base glass tubes.

A plug-in type vibrator is used. It is non-synchronous, with an 84 or 6X5G tube serving as the rectifier. The vibrator and the rectifier tube are contained in a rectangular metal shield with removable top cover, mounted on top of the chassis.

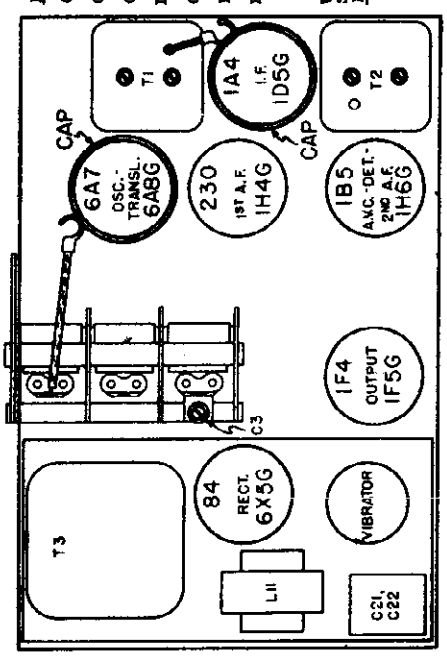

TOP OF CHASSIS - MODEL 101419

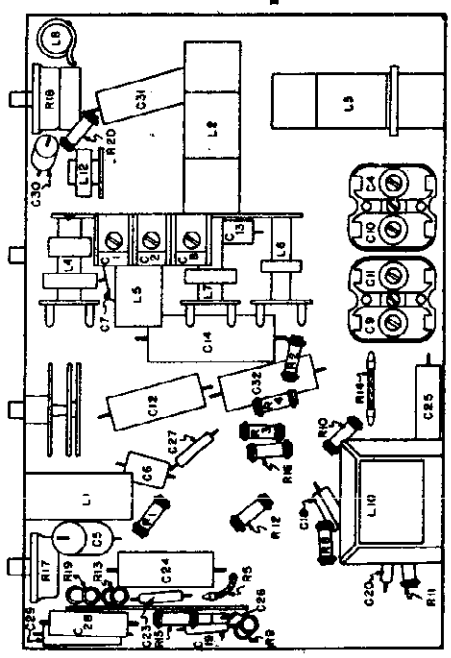

LOCATIONS OF PARTS UNDER CHASSIS - MODEL 101419

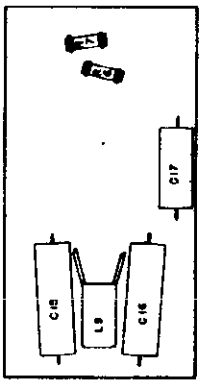

LOCATIONS OF PARTS UNDER POWER UNIT
MODEL 101419

©John F. Rider, Publisher

SEARS-ROEBUCK & CO.

MODELS 4409,4413,4442,4443
4522,4523,4542,4543
Schematic,Voltage,Alignment
Notes

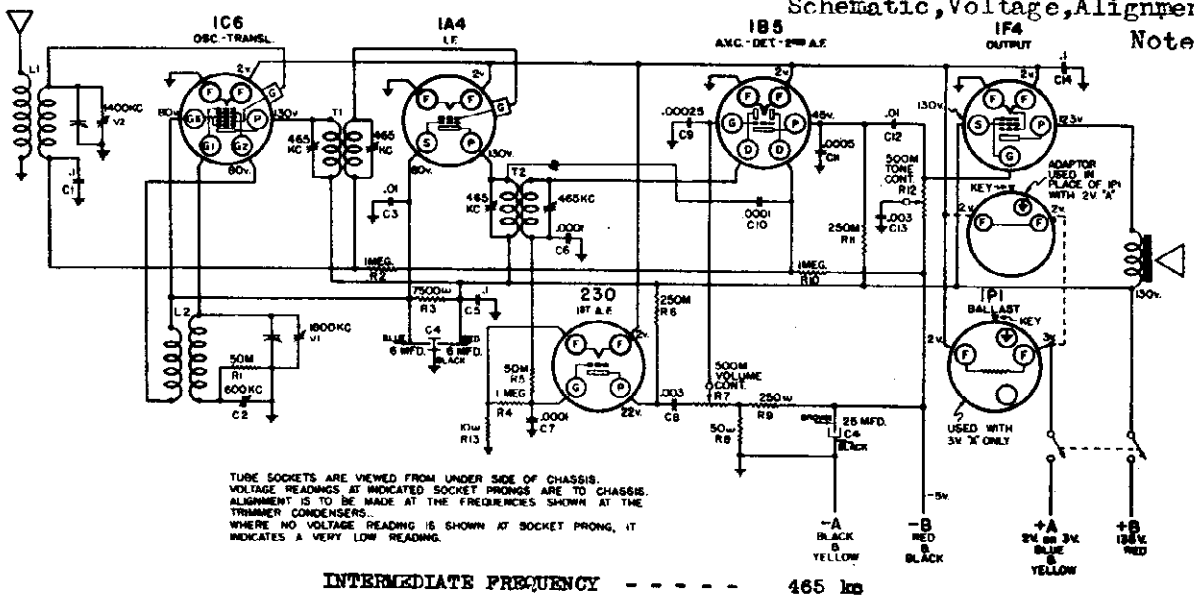

INTERMEDIATE FREQUENCY - - - - - 465 kc

ALIGNMENT PROCEDURE

PRELIMINARY:

Output meter connections - - - - - - - - 4000 ohm meter, in series with a .5 mfd. condenser, across speaker terminals.

Output meter reading to indicate 50 milliwatts - - - - - - - - - - - - - - - - - - 8.5 volts

Generator ground lead connection - Receiver chassis

Dummy antenna value to be in series with generator output - - - - - - - - - See chart below

Connection of generator output lead - See chart below

Position of volume control - On full

GENERATOR FREQUENCY	DUMMY ANTENNA	GENERATOR CONNECTION	TRIMMERS ADJUSTED	POSITION OF VARIABLE
465 kc	.1 mfd.	1A4 Grid	T2	-
465 kc	.1 mfd.	1C6 Grid	T1	-
1800 kc	.0002 mfd.	Antenna Lead	V1	Completely open
1400 kc	.0002 mfd.	Antenna Lead	V2	1400 kc (rock)
600 kc	.0002 mfd.	Antenna Lead	C2	600 kc (rock)

Parts may be secured direct from the Colonial Radio Corp,. 254 Rano Street, Buffalo, New York.

POWER SUPPLY:
"A" Battery, 3 volt - - - 1 - #5023P
"A" Battery, 2 volt storage 1 - #734
"B" Batteries - - - - - - - 3 - #5503P
"A" Drain - - - - - - - - - .42 amperes
"B" Drain - - - - - - - - - - 18 ma

ALIGNMENT FREQUENCIES:
1800 kc - - - - (oscillator trimmer)
1400 kc - - - - (translator trimmer)
600 kc - - - - (oscillator padder)

SPEAKER ADJUSTMENT

There are two adjusting screws at the rear of the speaker, as shown in the illustration. Speaker rattle can be corrected by turning these screws. Tighten one and loosen the other slightly until the rattle is eliminated.

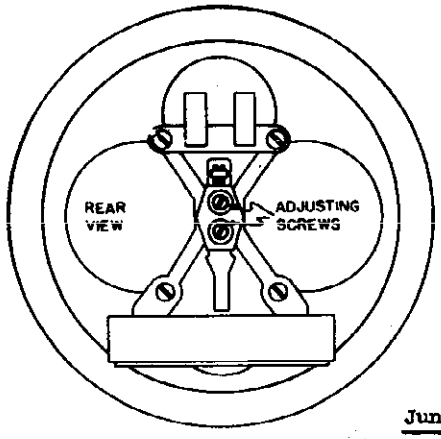

June 5, 1936

©John F. Rider, Publisher

MODELS 4409,4413,4442,4443
4522,4523,4542,4543 SEARS-ROEBUCK & CO.
Chassis, Socket, Trimmers
Sensitivity

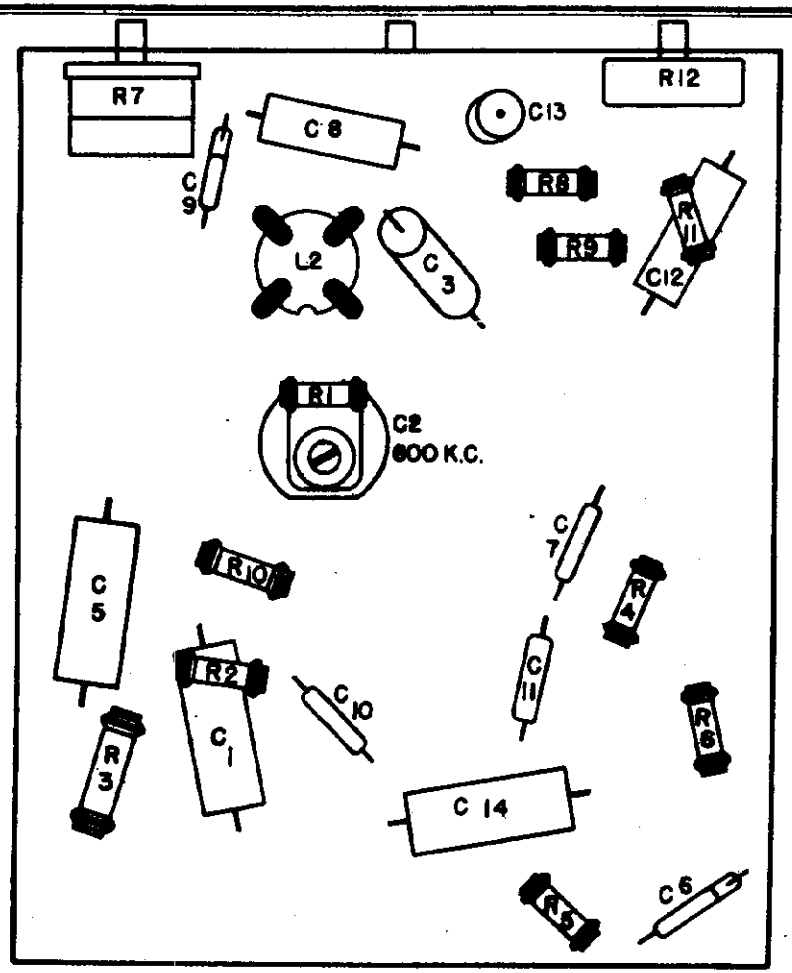

LOCATIONS OF PARTS UNDER CHASSIS

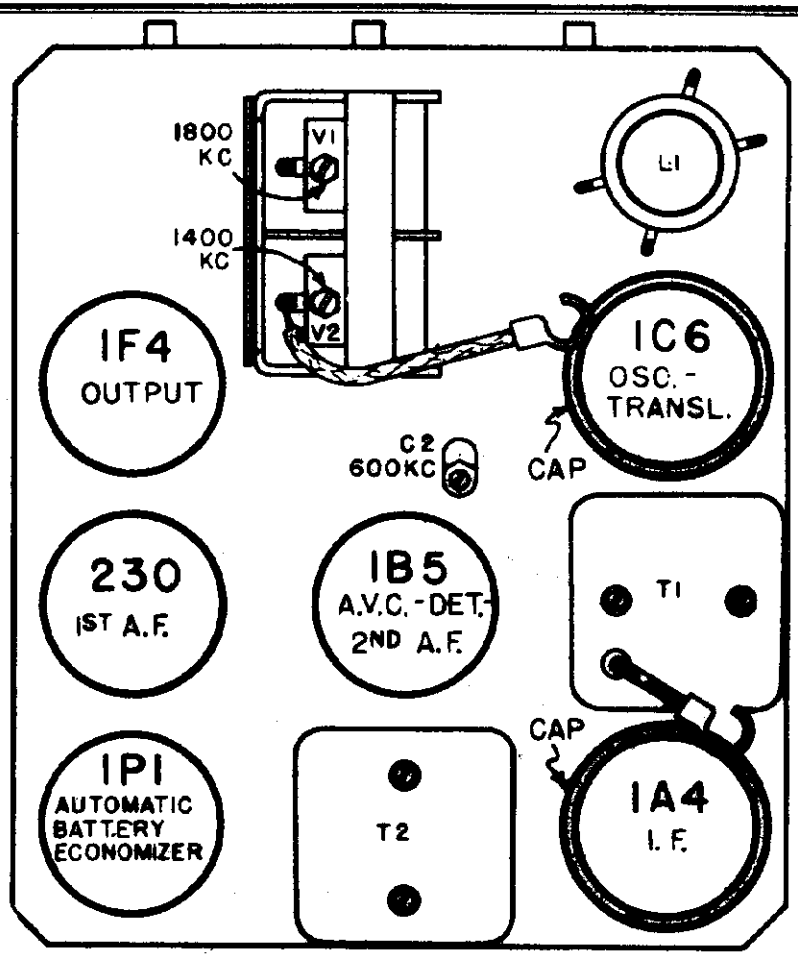

LOCATIONS OF PARTS ON TOP OF CHASSIS

SUBJECT: APPROXIMATE AVERAGE SENSITIVITY IN MICROVOLTS FOR 50 MILLIWATTS OUTPUT:

The generator connections and the receiver settings are to be as described in Service Instructions #57RL 9, for this model. The generator modulation is to be 30% at 400 cycles.

Frequency	Microvolts
600 kc	35
1000 kc	40
1400 kc	60

9000 microvolts, at IF grid, with variable closed and .1 mfd. dummy antenna.

125 microvolts, at translator grid, with variable closed and .1 mfd. dummy antenna.

LOUD SPEAKER:
Type - - - - - - - - - - - - Magnetic
Size - - - - - - - - - - - - - 6 inch
DC resistance - - - - - - - 1000 ohms

POWER OUTPUT:
Type - - - - - - - - - Single Pentode
Undistorted - - - - - - - - - .36 watts
Maximum - - - - - - - - - - - .9 watts

©John F. Rider, Publisher

SEARS-ROEBUCK & CO.

MODELS 4428A,4448A,4528A,4548A
Schematic,Socket,Trimmers
Voltage

Parts may be secured direct from the Colonial Radio Corp.,254 Rane Street, Buffalo, New York.

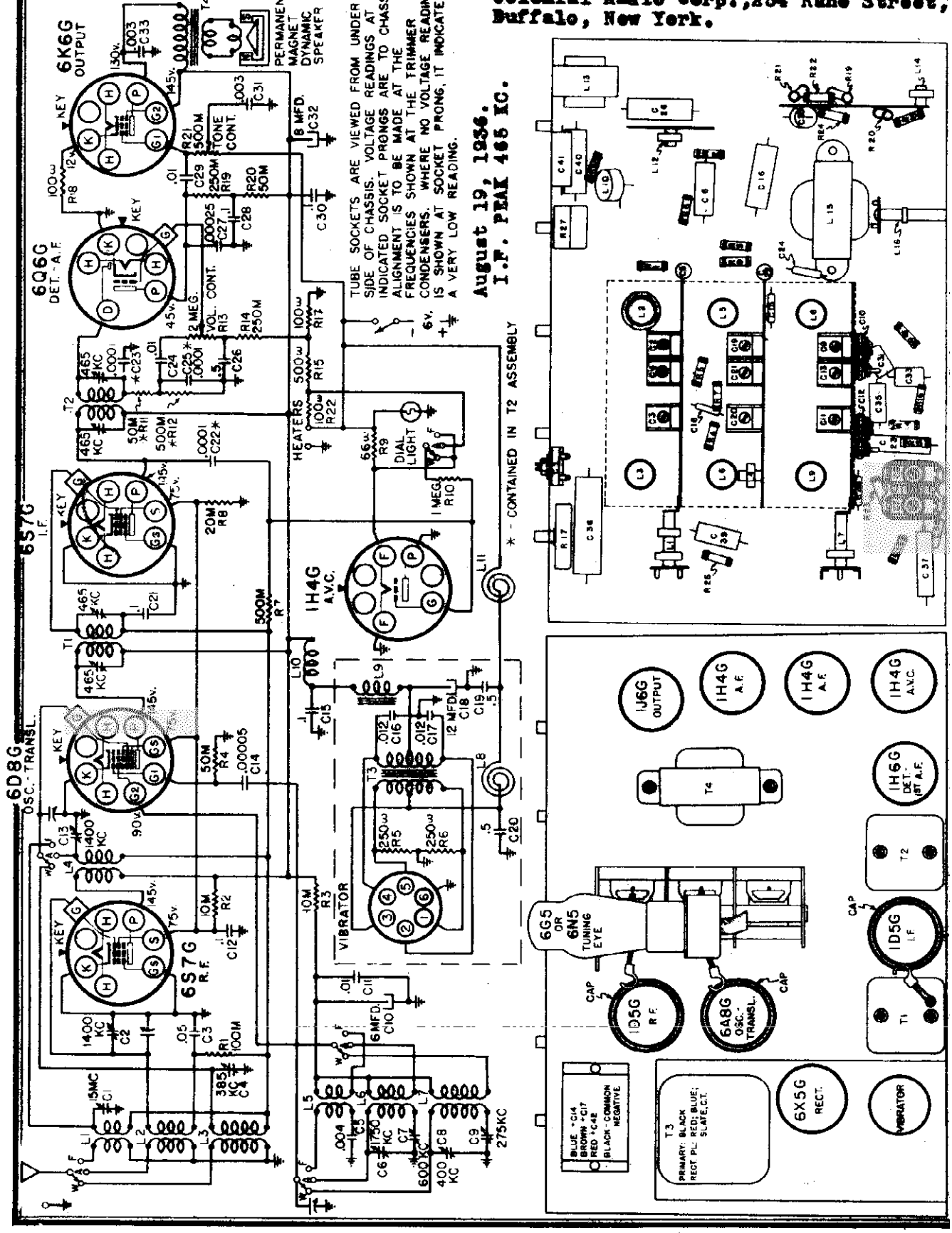

© John F. Rider, Publisher

MODELS 4428A,4448A,4528A,4548A
Alignment,Data,Transformer

SEARS-ROEBUCK & CO.

ELIMINATING WHISTLE AT 930 KC:

A whistle, due to a beat between the second harmonic (930 kc)of the 465 kc IF,and a 930 kc signal may be experienced. In localities where the 930 kc station is one that is frequently listened to, it will be desirable to shift the whistle to some other point where it will not be objectionable. This can be done by shifting the IF frequency of the receiver.

Determine at what point between 900 kc and 960 kc the whistle will be least objectionable. Dividing this frequency by two will give the new IF frequency to which the receiver should be aligned. For example, if it is determined that a whistle at 915 kc would not be objectionable, the IF should be realigned at 915/2 or 457.5 kc.

Align the IF at the new frequency and then realign the rest of the receiver as described under, "ALIGNMENT PROCEDURE".

POWER TRANSFORMER COLOR CODE

1,2,3 - Solid Conductor
4 - Red
5 - Slate
6 - Blue

LOCATIONS OF PARTS UNDER POWER SUPPLY UNIT

LOUD SPEAKER:
Type - Permanent Magnet Dynamic
Size - 6½" or 8"

POWER OUTPUT:
Type - Single Pentode
Undistorted - .8 watts
Maximum - 1.6 watts

ALIGNMENT PROCEDURE

PRELIMINARY:

Output meter connection - Across speaker voice coil

Output meter reading to indicate 50 milliwatts - .45 volts

Approximate average sensitivity in microvolts for 50 milliwatts output - - See chart below

Generator ground lead connection - Receiver chassis

Dummy antenna value to be in series with generator output - - - - - - - - - - - - - - - - See chart below

Connection of generator output lead - See chart below

Generator modulation - 30%, 400 cycles

Position of volume control - All the way on

Position of tone control - Fully clockwise

WAVE BAND SWITCH POSITION	POSITION OF VARIABLE	GENERATOR FREQUENCY	DUMMY ANTENNA	GENERATOR CONNECTION	TRIMMER ADJUSTMENTS (IN ORDER SHOWN)	APPROXIMATE MICROVOLTS
"A"	Closed	465 kc	.1 mfd.	6SQ7 Grid	T2, T1	-
"A"	Fully open	1750 kc	.0002 mfd.	Antenna Lead	C6	25
"A"	1400 kc	1400 kc	.0002 mfd.	Antenna Lead	C2, C13	10
"A"	600 kc (rock)	600 kc	.0002 mfd.	Antenna Lead	C7	12
"B"	Fully open	400 kc	.0002 mfd.	Antenna Lead	C8	95
"B"	385 kc	385 kc	.0002 mfd.	Antenna Lead	C4	100
"B"	275 kc (rock)	275 kc	.0002 mfd.	Antenna Lead	C9	110
"B"	15 mc (rock)	15 mc	400 ohms	Antenna Lead	C1	18
"B"	6 mc	6 mc	400 ohms	Antenna Lead	-	75

IMPORTANT ALIGNMENT NOTES

Where indicated by the word, "Rock", the variable should be rocked back and forth a degree or two while making the adjustment.

Alignment must be made in the sequence indicated.

All of the adjustment should be repeated in their original order for greater accuracy. In particular, the band "B" adjustments should be gone over two or three times since one adjustment affects the others.

Always keep the output from the signal generator at its lowest possible value in order to make the AVC action of the receiver ineffective.

After the alignment procedure has been completed, tune in a signal at about 900 kc and, if necessary, shift the dial pointer to the station's indicated frequency on the dial.

MODELS 7166,7166X
Schematic,Socket

SEARS-ROEBUCK & CO.

MODEL 7127,Early
MODELS 7127,Late,7133,7139
Schematic Changes,Socket

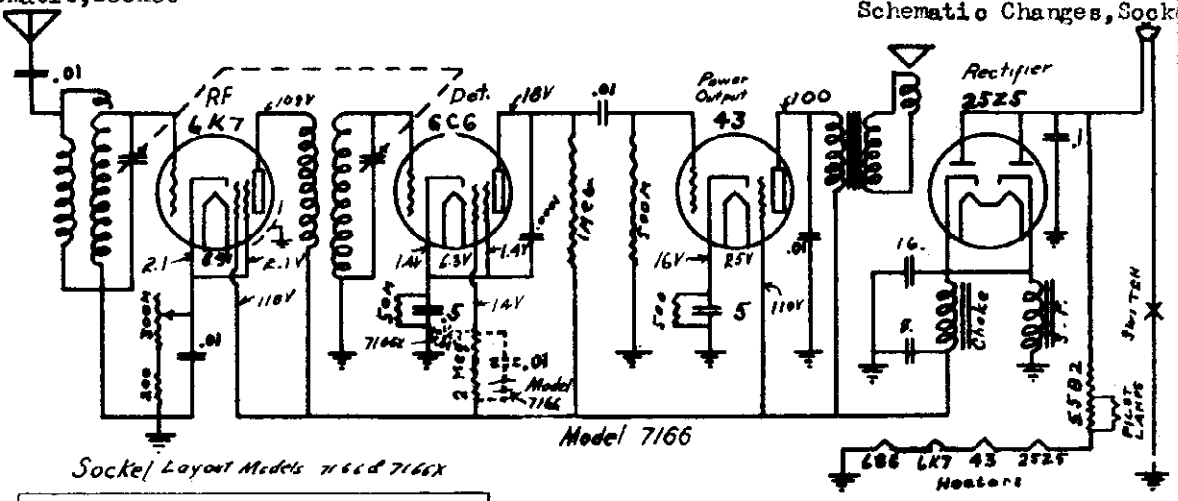

Model 7166

Socket Layout Models 7166 & 7166X

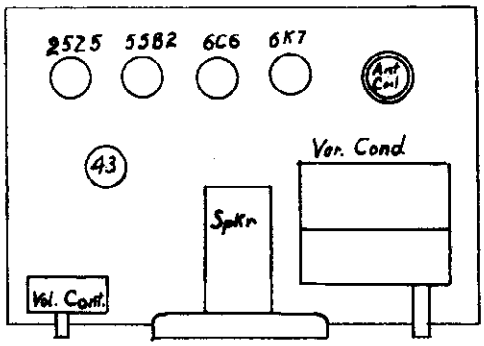

Model 7166X Changes from above schematic for 1766.

1. 6D6 Tube is used instead of 6K7
2. The .01 Mfd. Condenser in the screen circuit of the 6C6 is shown dotted and marked
3. The filter condensers are 16 Mfd
4. A .1 Mfd. is not connected from plates of rectifier to ground.

Rebalancing - to align receiver, proceed as follows:
1 - Remove chassis from its cabinet, open condenser all the way and adjust the trimmers on variable condenser, applying a 1712 KC note at the antenna.

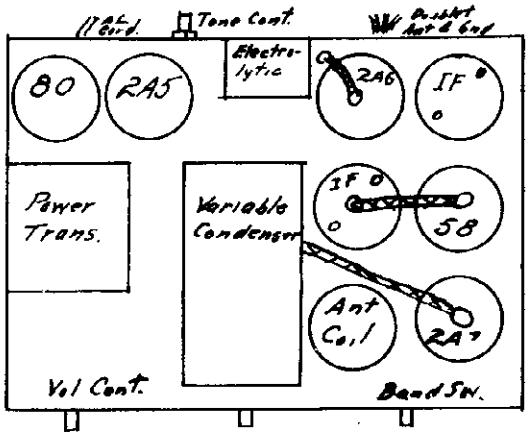

Model 7139

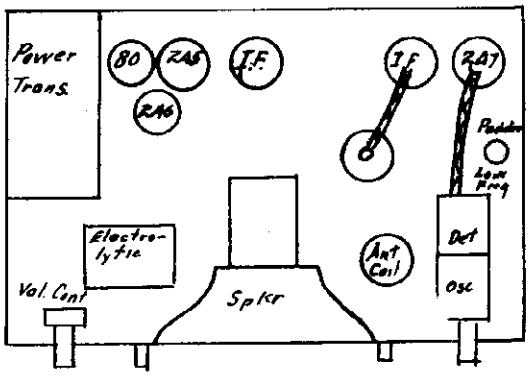

Model 7127-7139

FOR SCHEMATIC SEE INDEX

Parts for this model may be ordered from Echophone Radio Corp., 2611 Indiana Avenue, Chicago, Ill.

EARLY MODEL 7127 is similar to Echophone 143 except for the following changes:

1. 25M resistor previously connected from cathode of 2A7 to screen now goes from cathode to negative end of 100 ohm resistor in screen circuit.
2. Tone control of 50M variable resistor in series with .05 condenser connected from plate of 2A5 to ground.
3. .01 mfd. condenser added on switch side of line to ground.
4. 420 mmfd. tuning condensers are now 16-385 mmfd.

7133, 7139, & Late 7127 are similar to Echophone 143 except for the following changes:

1. A Doublet antenna is used: 2- A .0018 mf cond. changed to .0027.
3. 16-385 mmf tuning cond. changed to 16-420 MMF.
4. 3-40 MMF S.W. ant. cond. changed to 3-30 MMF.

© John F. Rider, Publisher

MODELS 7136, 7137
MODELS 1743A, 7140
Schematics, Socket
Alignment

SEARS-ROEBUCK & CO.

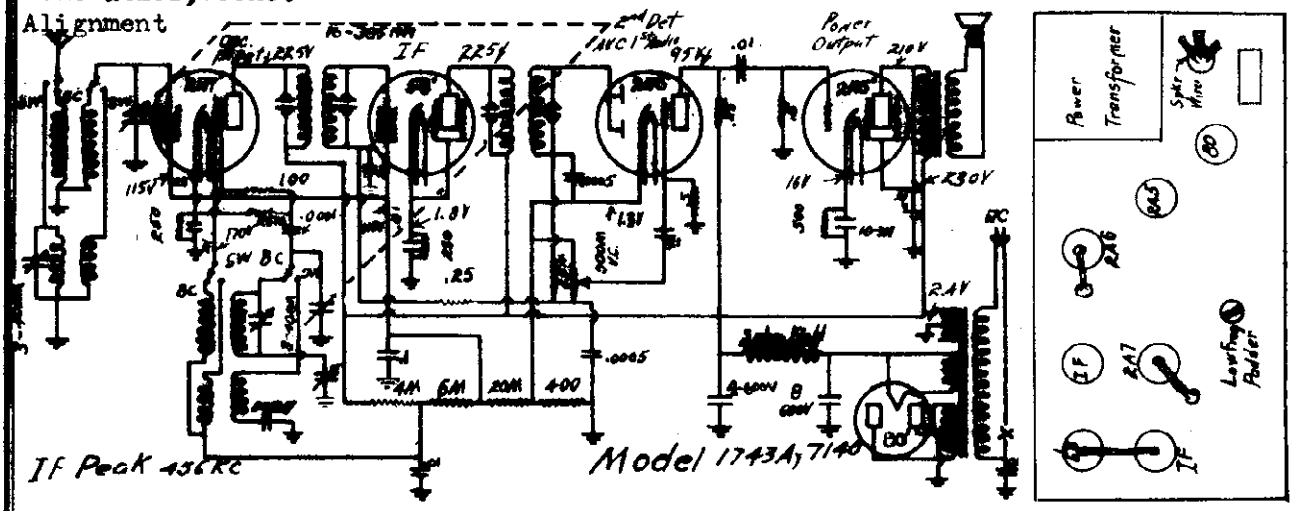

To align receiver, proceed as follows:

1 - Peak I.F. transformers, applying a 456 KC note at the 2A7 control grid.
2 - Turn variable condenser way open and apply a 1712 KC oscillator note at the antenna; set oscillator trimmer on oscillator coil first, then RF section on variable condenser.
3 - Adjust low frequency padder at 600 KC, rocking condenser back and forth across 600KC signal, and adjusting padder to maximum output.
4 - Go back and check at 1400 KC for alignment.
5 - Short Wave - adjust the small trimmer found underneath chassis on short wave antenna coil to maximum output. If short wave does not track with dial calibration, adjust trimmer on oscillator section of variable condenser until correct. Make all adjustments for short wave with variable tuned to center of 25 meter location on scale.

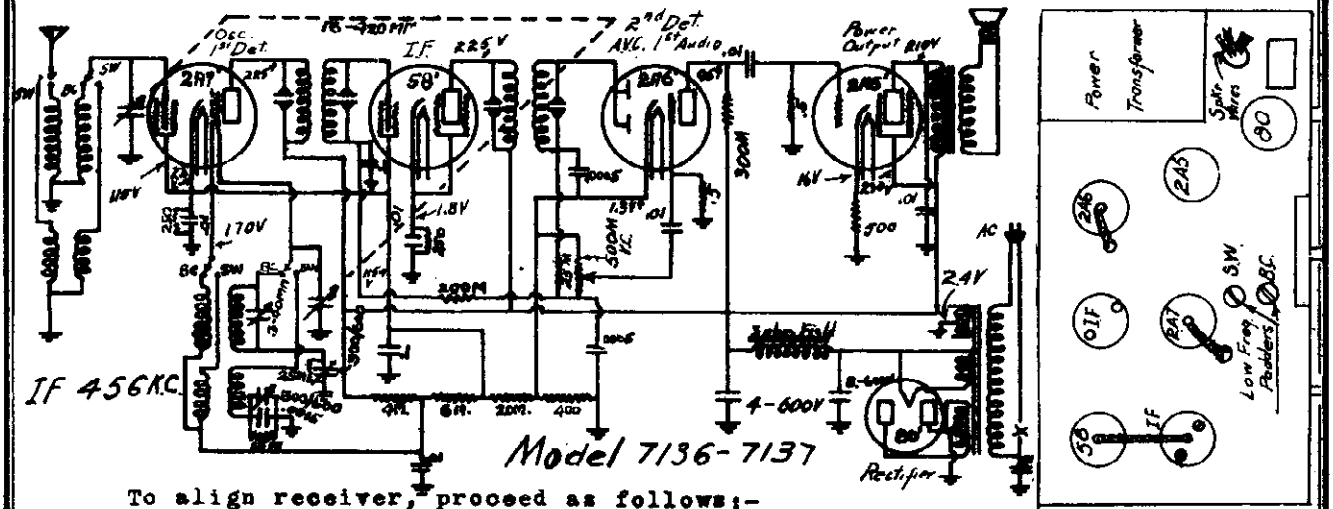

To align receiver, proceed as follows:-

1 - Peak I.F. transformers, applying a 456 KC note at the 2A7 control grid.
2 - Turn variable condenser all the way open, (minimum capacity) and apply a 1712 KC note at the antenna, set oscillator trimmer to peak output then the R F section of variable condenser, these two being found on the tuning condenser.
3 - Adjust low frequency padder marked B.C. at 600 KC, rocking condenser back and forth across 600 KC signal while adjusting padder to get maximum output.
4 - Short Wave - Short wave will not have to be adjusted except low frequency padder, this should be checked on noise level or some signal near 175 meters.

Parts may be secured from Echophone Radio Corp. 2611 Indiana Ave Chicago Ill.

©John F. Rider, Publisher

Schematic, Socket

SEARS-ROEBUCK & CO.

MODEL 7144
Schematic, Socket
Alignment
MODELS 7165.7165X

Parts may be secured direct from Rohophone Radio Corp., 2611 Indiana Avenue, Chicago, Illinois.

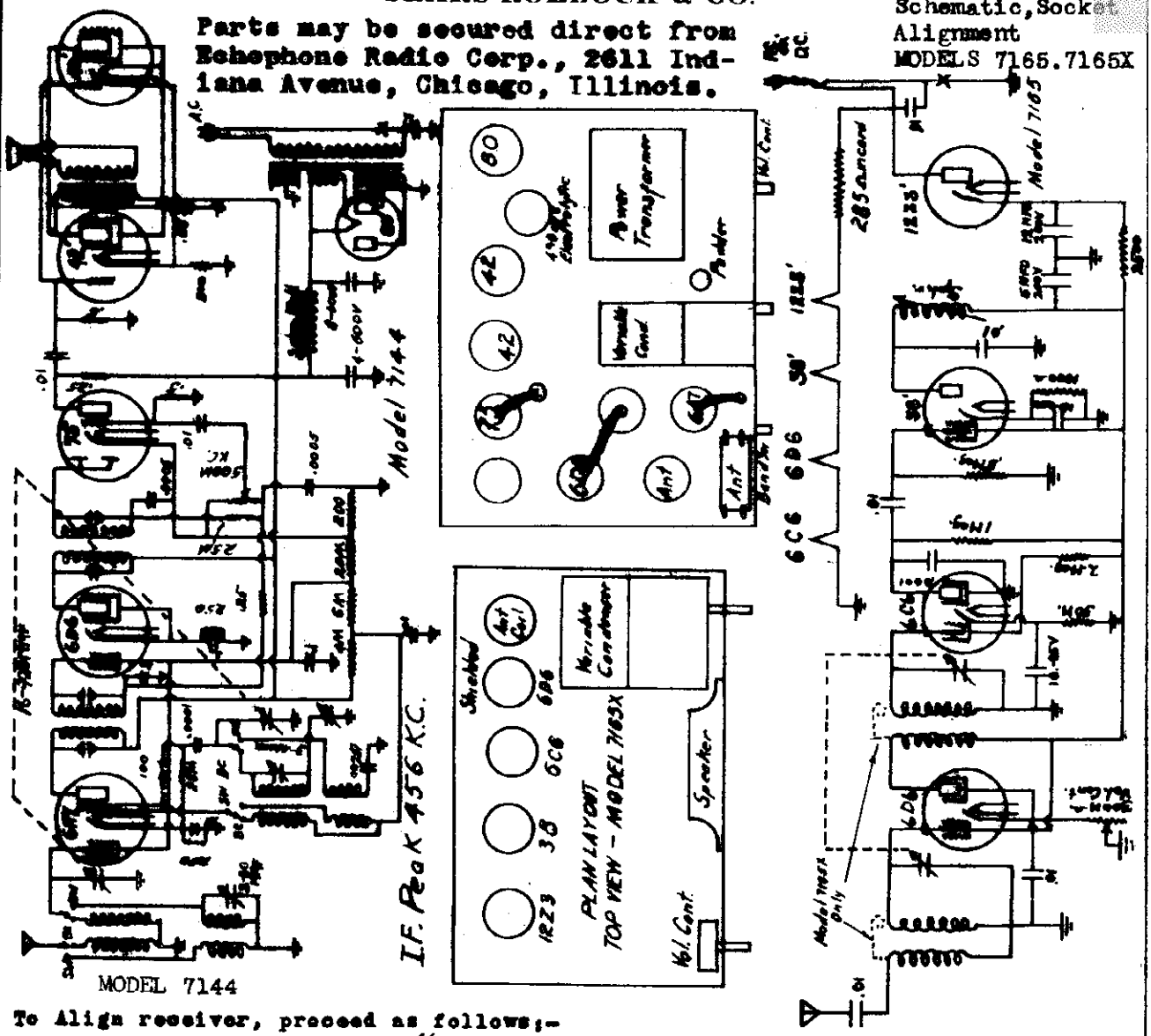

MODEL 7144

To Align receiver, proceed as follows:-

Model 7144

1 - Peak I.F. transformers, applying a 456 KC note from an oscillator to the 6A7 Control grid.

2 - Turn variable condenser all the way open and apply a 1720 Kc oscillator note at the antenna; set oscillator trimmers on oscillator coil to reach center of note, then adjust R.F. section of variable condenser to maximum output.

3 - Adjust low frequency padder at 600 KC, adjust padder while rocking condenser back and forth across 600 KC signal until maximum signal is obtained.

4 - Go back and check B.C. Band at 1400 KC, do not bend plates of Gang condenser.

5 - Short Wave. - Adjust the small trimmer (3 to 30 mmf) found beside S.W. Antenna Coil to maximum output. If short wave does not track with dial calibration, adjust trimmer on oscillator section of variable condenser until correct. Make all adjustments for short wave with variable tuned to center of 25 meter location on scale.

Model 7165X differs from 7165 by the change shown to the left, the addition of Capacity C5, and the substitution of a 5Mfd instead of a 1Mfd condenser in the grid bias of the 38

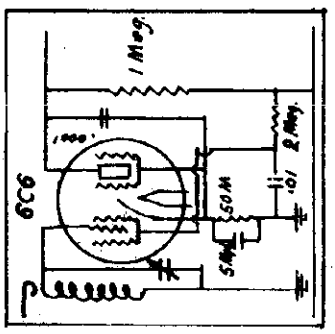

©John F. Rider, Publisher

MODEL 7150
Schematic, Socket
Alignment

SEARS-ROEBUCK & CO.

MODEL 7154
Schematic, Socket

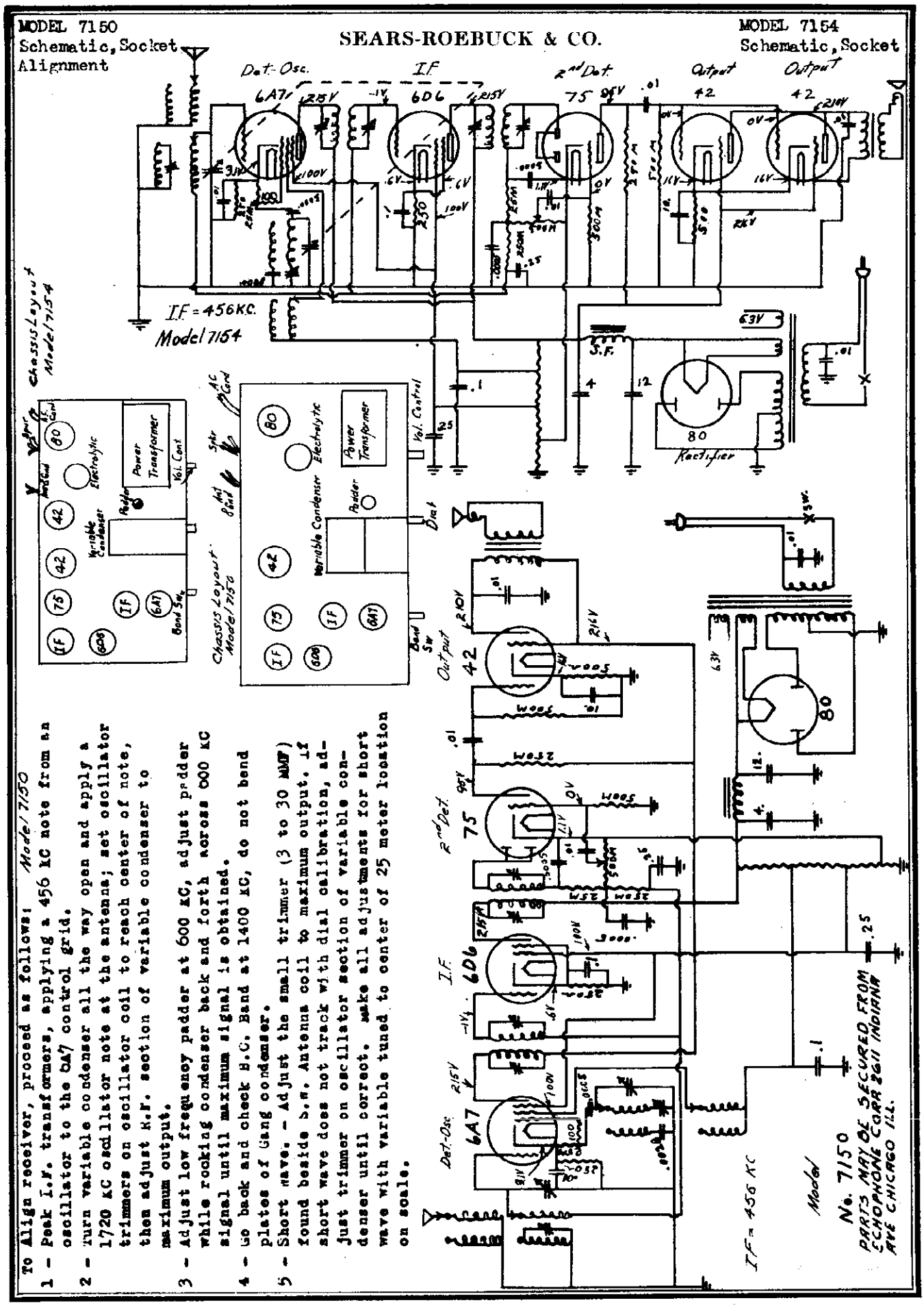

To Align receiver, proceed as follows: Model 7150

1 - Peak I.F. transformers, applying a 456 kC note from an oscillator to the 6A7 control grid.

2 - Turn variable condenser all the way open and apply a 1720 kC oscillator note at the antenna; set oscillator trimmers on oscillator coil to reach center of note, then adjust R.F. section of variable condenser to maximum output.

3 - Adjust low frequency padder at 600 kC, adjust padder while rocking condenser back and forth across 600 kC signal until maximum signal is obtained.

4 - Go back and check B.C. Band at 1400 kC, do not bend plates of Gang condenser.

5 - Short wave. - Adjust the small trimmer (3 to 30 MMF) found beside S.W. Antenna coil to maximum output. If short wave does not track with dial calibration, adjust trimmer on oscillator section of variable condenser until correct. Make all adjustments for short wave with variable tuned to center of 25 meter location on scale.

©John F. Rider, Publisher

MODELS 1900,1910
Notes,Change

SEARS-ROEBUCK & CO.

MODEL 7155
Schematic,Socket
Alignment
MODEL 7152

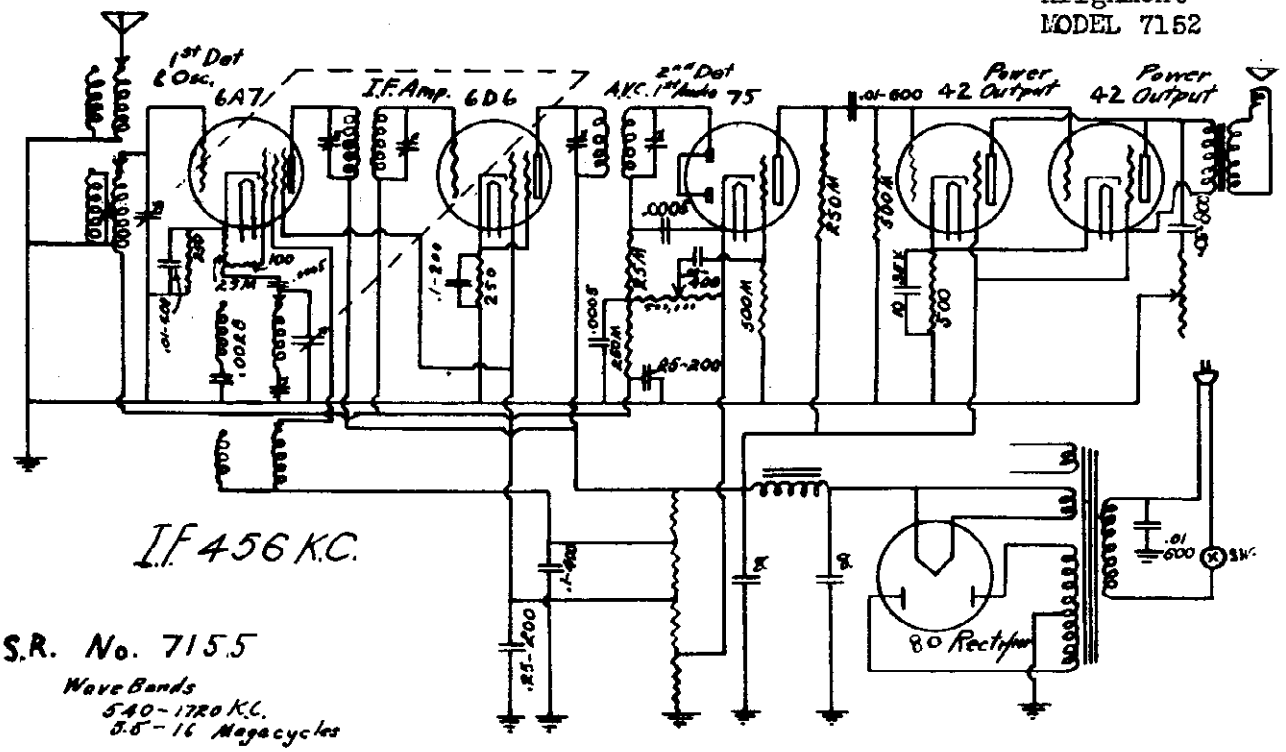

Parts for this model may be ordered from Echophone Corp., 2611 Indiana Ave., Chicago, Ill.

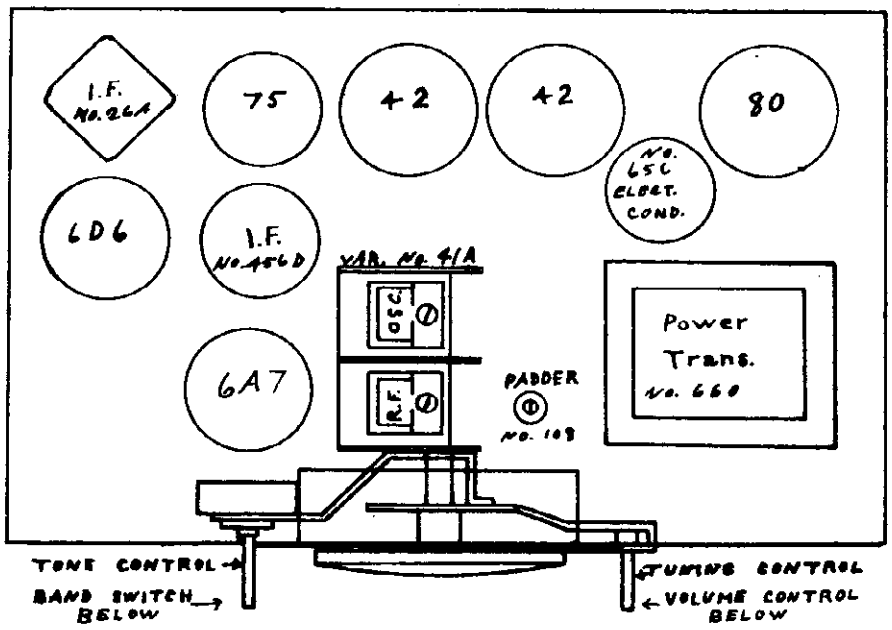

Alignment

1. Apply 456 kc. signal to control grid of 6A7 and peak i-f trimmers for maximum signal.
2. Apply 1400 kc. signal to antenna input and ground and align trimmers for maximum gain.
3. Apply 600 kc. signal to input and adjust padder for maximum output, rocking the tuning condenser during the operation.
4. Check alignment at 1400 kc.
5. Check alignment on short waves at 12. megacycles.

Models 1900-1910 are similar to Echophone Model 139, 139C page 6-1
Error on drawing - Connect tone control on plate only.
Change - Tone control knob was shown on left front side of chassis instead of on rear of chassis.

Model 7152 is similar to Echophone Model 128 page 5-1.
Change - 5 MFD condenser across speaker field taken out.

©John F. Rider, Publisher

MODEL 7158
Schematic, Trimmers
Socket, Alignment

SEARS-ROEBUCK & CO.

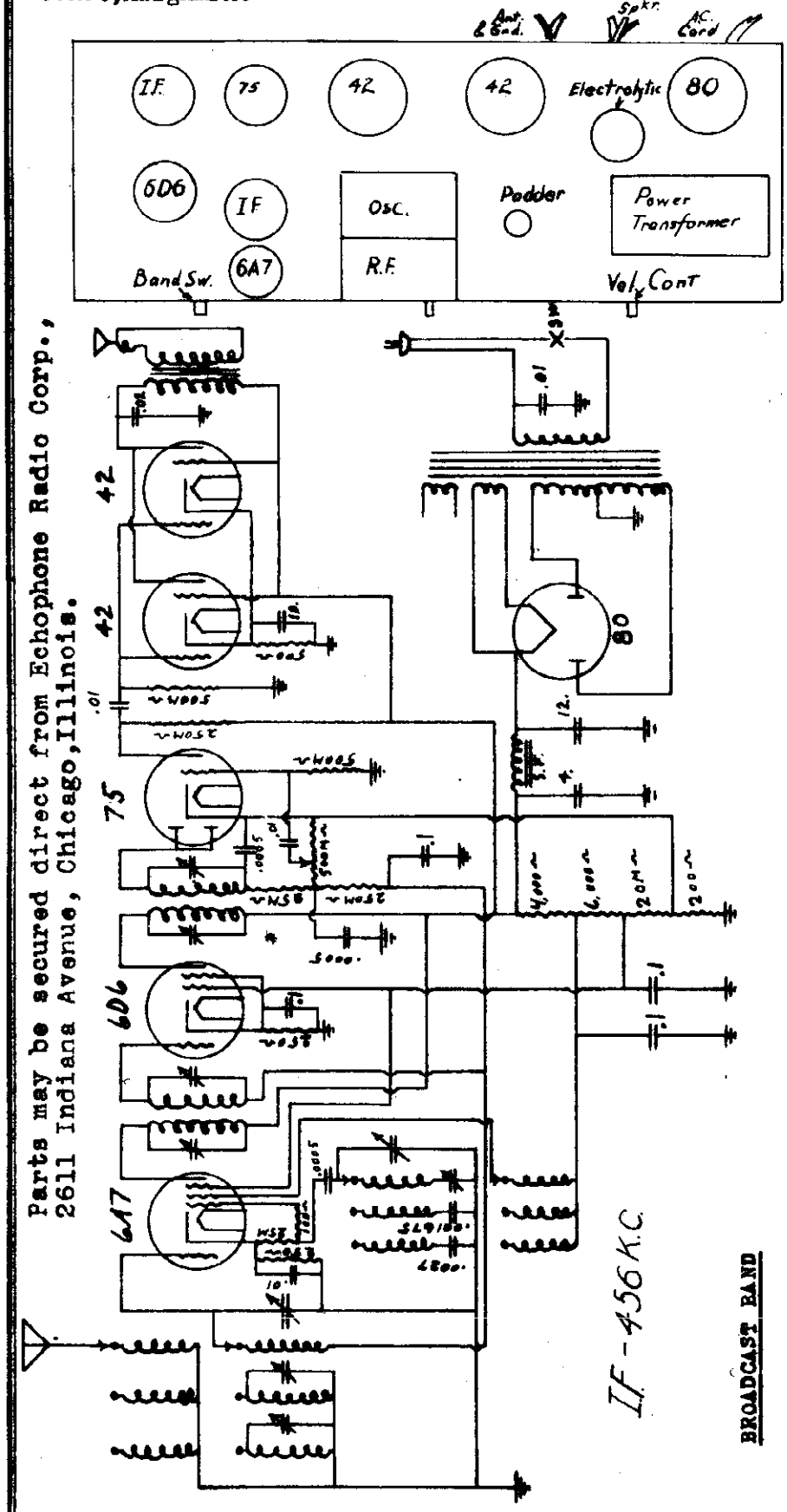

Parts may be secured direct from Echophone Radio Corp., 2611 Indiana Avenue, Chicago, Illinois.

BROADCAST BAND

1 - Peak I.F. transformers, applying a 456 KC note from a service oscillator to the grid of the 6A7 tube.

2 - Rotate condenser all the way open, apply a 1720 KC note to the antenna wire, then adjust oscillator trimmer on variable condenser to the signal and then peak the R.F. section of the variable.

3 - Apply a 600 KC note to antenna wire. Adjust padder for maximum gain while rocking the variable condenser back and forth across the 600 KC signal.

4 - Go back and check around 1400 KC for alignment. Do not bend plates.

SECOND BAND - S.W.

5 - Adjust trimmer, found on top of chassis next to ant coil, for maximum noise level at 4 megacycles.

THIRD BAND - S.W.

6 - Adjust trimmer, found underneath the chassis next to the antenna coil, for maximum noise level at 12 megacycles.

©John F. Rider, Publisher

Schematic, Voltage Data
MODELS 1922, 1932, 1982, 1992
Notes, Changes

SEARS-ROEBUCK & CO.

MODEL 7166A
Schematic, Socket
MODEL 7168

Parts may be secured direct from Echophone Radio Corp., 2611 Indiana Avenue, Chicago, Illinois.

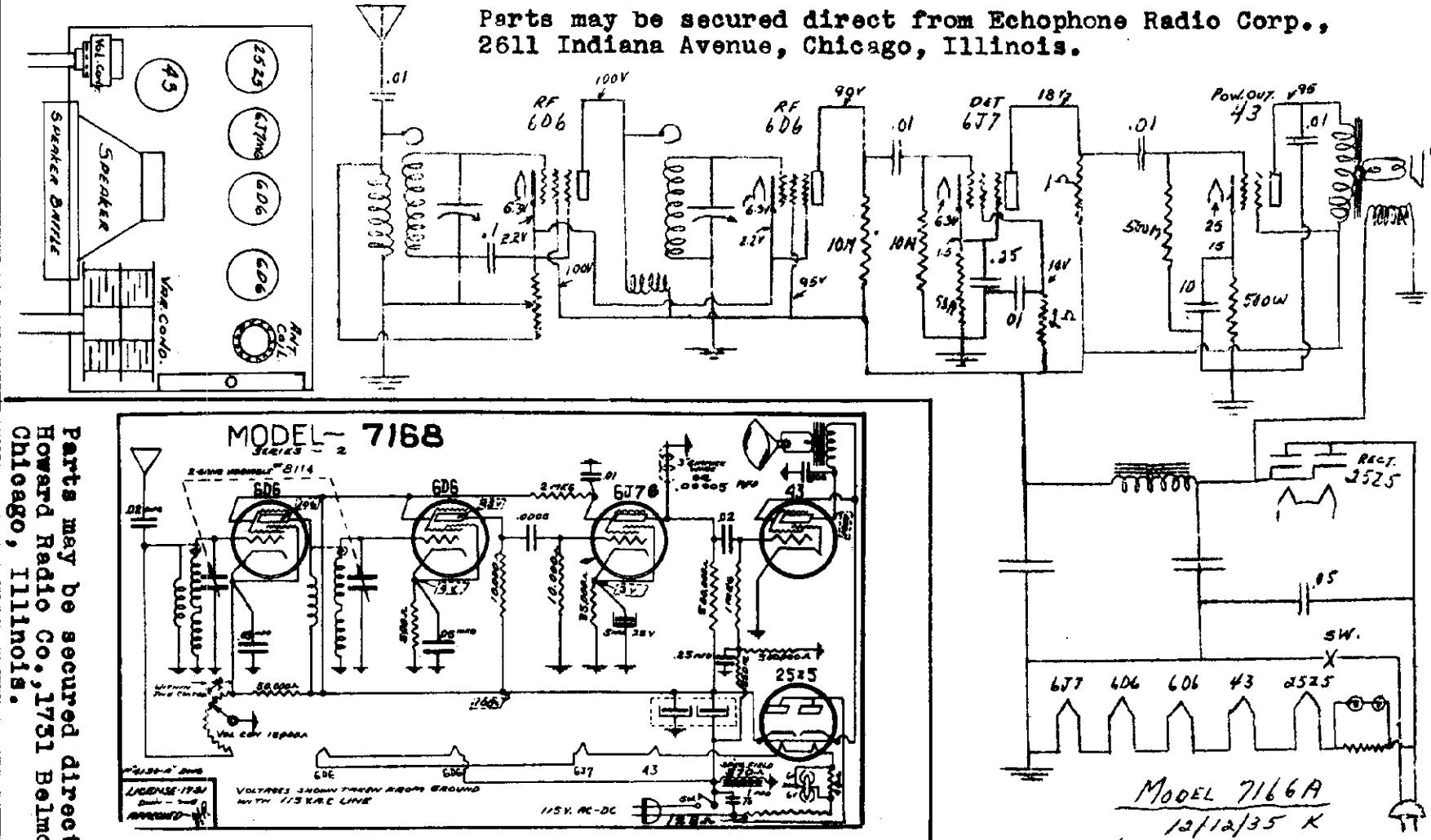

THE TWO TRIMMERS ON THE VARIABLE CONDENSER ARE ALIGNED AT 1400 KC.
WHEN THE VARIABLE IS AT FULL MAXIMUM CAPACITY (ALL THE WAY TO THE RIGHT) THE DIAL HAND SHOULD BE SET ABOVE THE HORIZONTAL DIVIDING LINE ABOUT 1/8" OR SO WHICH WOULD PLACE THE OPPOSITE END OF THE POINTER ON 1700KC. THE HAND IS ADJUSTED BY THE SET SCREW AND COLLAR ON THE VARIABLE CONDENSER SHAFT.

Models 1922, 1932, 1982, 1992 are similar to Colonial Model 659 page 5-45.

Changes: I 1A2 Ballast tube instead of similar 30 ballast tube.

II. IF Peak 175 KC instead of 480 KC.

III 8 M.F.D. screen filter condenser instead of 6 M.F.D.

Parts may be secured direct from the Howard Radio Co., 1731 Belmont Avenue, Chicago, Illinois.

©John F. Rider, Publisher

MODEL 7167

SEARS-ROEBUCK & CO.

Schematic, Voltage Alignment, Parts

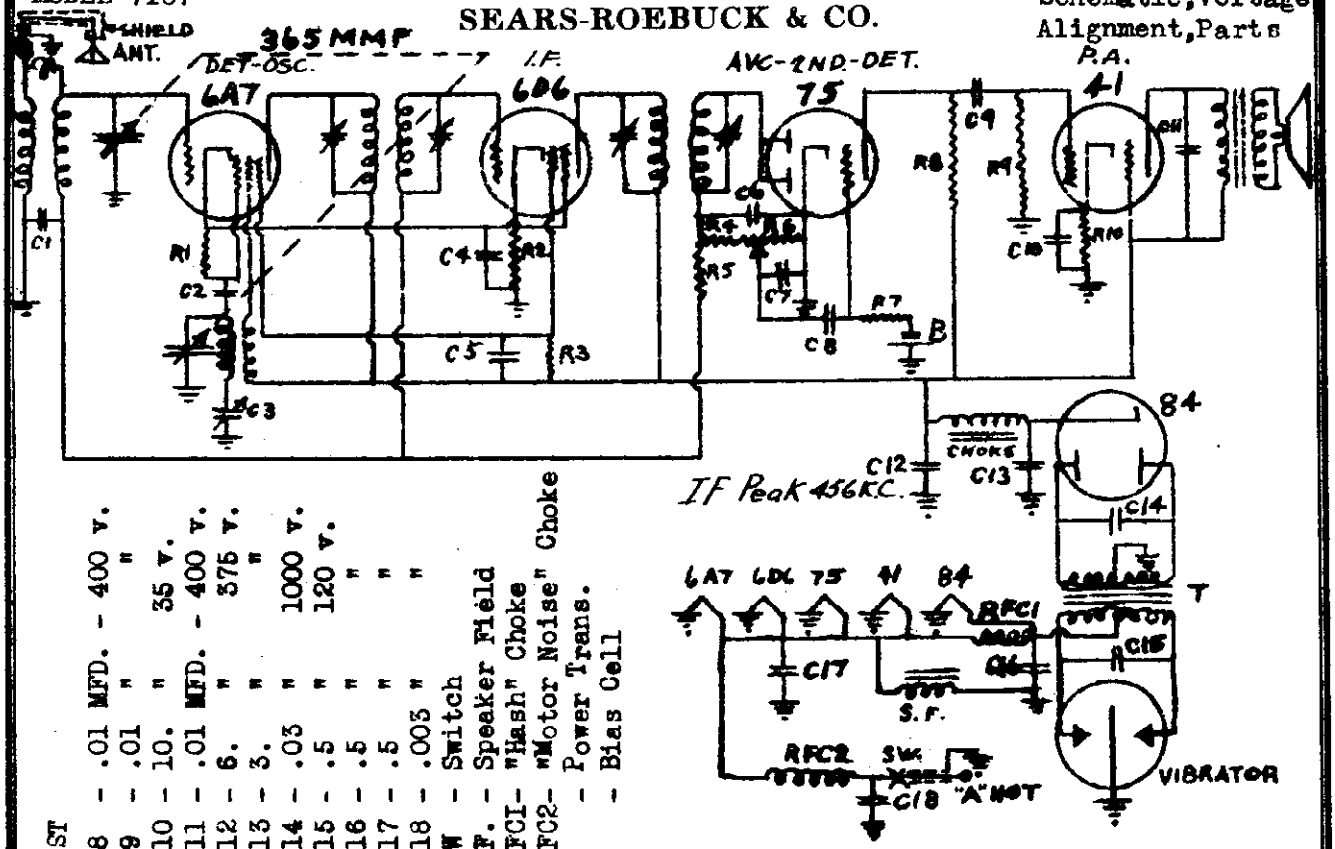

PARTS LIST

R1	-	15,000 ohm 1/3 Watt	
R2	-	100 " " "	
R3	-	25,000 " " "	
R4	-	25,000 " " "	
R5	-	1 Meg. " " "	
R6	-	500,000 " Vol. Cont.	
R7	-	500,000 " 1/3 Watt	
R8	-	250,000 " " "	
R9	-	500,000 " " "	
R10	-	500 " " "	
C1	-	.05 MF - 200 v.	
C2	-	.0001 MICA	
C3	-	300/600 MMF. Padder Cond.	
C4	-	.1 MFD. 200 v.	
C5	-	.01 " 400 v.	
C6	-	.0005 MFD. Mica	
C7	-	.0005 " "	
C8	-	.01 MFD. - 400 v.	
C9	-	.01 " "	
C10	-	10. " 35 v.	
C11	-	.01 MFD. - 400 v.	
C12	-	6. " 375 v.	
C13	-	3. " "	
C14	-	.03 " 1000 v.	
C15	-	.5 " 120 v.	
C16	-	.5 " "	
C17	-	.5 " "	
C18	-	.003 " "	
SW	-	Switch	
SF.	-	Speaker Field	
RFC1-		"Hash" Choke	
RFC2-		"Motor Noise" Choke	
T	-	Power Trans.	
B	-	Bias Cell	

VOLTAGE READINGS ARE TAKEN ON A 1000 OHM PER VOLT METER

	6A7	6D6	75	41
FIL.	6V.	6V.	6V.	6V.
PLT.	225	225	90	205
G4	100	100	—	225
G3	225	---	--	---
CAT.	2.3	2.3	--	15

CAT. - CATHODE
FIL. - FILAMENT
PLTE - PLATE
G4 - SCREEN GRID
G3 - OSCILLATOR PLATE

ALIGNMENT PROCEDURE

Apply a 456 kc note to grid of 6A7 tube and adjust IF transformers for maximum response noted on output meter.

Apply a 1400 kc note to antenna wire and adjust trimmers on variable condenser for greatest gain.

Apply a 600 kc note to antenna wire and adjust padder condenser, at end of chassis, for maximum gain, swinging the variable condenser back and forth across signal while adjusting.

Go back to 1400 kc and check for alignment.

Parts for this model may be ordered from Echophone Radio Corporation, 2611 Indiana Ave., Chicago, Ill.

©John F. Rider, Publisher

SENTINEL RADIO CORP.

MODEL 20A
Schematic, Voltage
Trimmers, Alignment

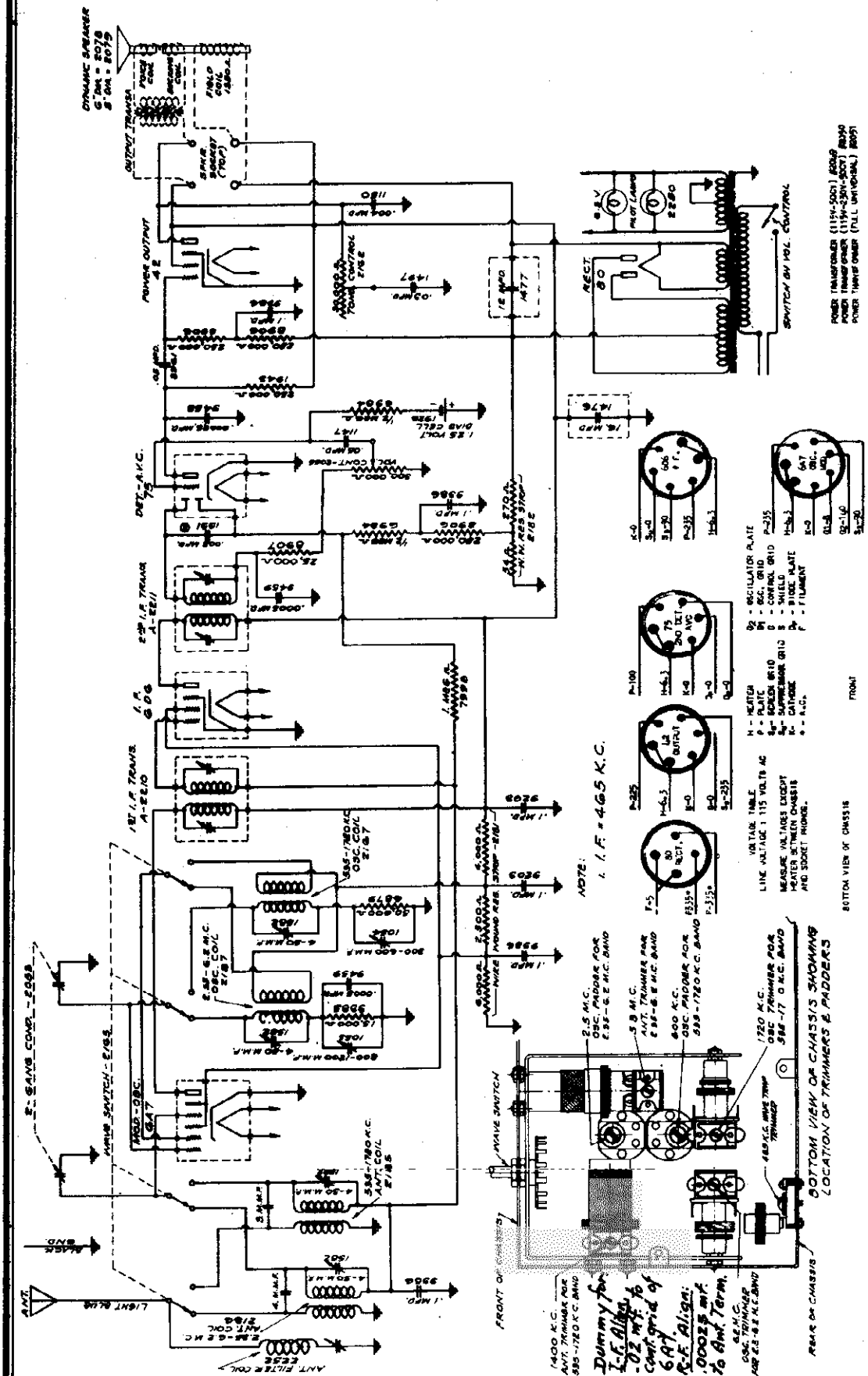

Some code and aircraft signals are broadcast on a frequency the same or near the intermediate frequency of the receiver. To eliminate interference from these signals a 465 kilocycle antenna filter is incorporated in the set. To adjust, tune receiver dial to approximately 1000 kilocycles and set test oscillator frequency to EXACTLY 465 KILOCYCLES. Then adjust the 465 kilocycle wavetrap trimmer condenser for MINIMUM 465 KILOCYCLE SIGNAL RESPONSE.

© John F. Rider, Publisher

MODEL 47A
Voltage
Alignment

SENTINEL RADIO CORP.

ALIGNING I. F. STAGE AT 465 KILOCYCLES:

(a) Attach the ground lead of the test oscillator to the chassis. Connect the other lead to the grid cap of the 6L7 tube through a .02 Mfd. series condenser. DO NOT REMOVE GRID CLIP.
(b) Set test oscillator to EXACTLY 465 kilocycles and turn receiver volume control on full.
(c) Peak each of the second I. F. transformer trimmers.
(d) Peak each of the first I. F. transformer trimmers.

To assure most accurate trimmer setting repeat above adjustment several times always using lowest possible test oscillator output consistent with readable output meter scale deflection.

ALIGNING 1800-540 KILOCYCLE BAND:

(a) Adjust band selector switch for operation on the 1800-540 kilocycle band, remove test oscillator lead from grid of 6L7 tube and connect to receiver antenna terminal through a .00025 Mfd. series condenser.
(b) Set test oscillator frequency and receiver dial to EXACTLY 1800 kilocycles, and bring in 1800 kilocycle test oscillator signal to maximum output by adjusting 1800 kilocycle oscillator trimmer.
(c) Tune receiver dial and set test oscillator frequency to EXACTLY 1500 kilocycles. Adjust 1500 K. C. R. F. and ant. trimmers for maximum sensivity.
(d) Set test oscillator frequency and receiver dial to approximately 600 kilocycles. Then while rocking gang condenser slightly to right and left, adjust 600 K. C. oscillator padder for maximum signal response.

ALIGNING 1.8-6.3 MEGACYCLE BAND:

(a) Replace .00025 Mfd. antenna series condenser with 400 ohm resistor, adjust band selector switch to 1.8-6.3 megacycles band, tune receiver dial and set test oscillator frequency to EXACTLY 6.3 megacycles. Bring in 6.3 megacycle test oscillator signal to maximum output by adjusting 6.3 M.C. oscillator trimmer.
(b) Tune receiver dial and set test oscillator frequency to EXACTLY 6 megacycles. Then adjust 6 M.C. ant. and R.F. trimmers for maximum sensitivity.

ALIGNING 6.1-21 MEGACYCLE BAND:

(a) Place band selector switch for operation on 6.1-21 megacycle band, tune receiver dial and set test oscillator frequency to EXACTLY 21 megacycles.
(b) Adjust 21 M. C. oscillator trimmer to bring in 21 megacycle test signal to maximum output.

NOTE: When adjusting this trimmer two peaks, the fundamental and the image peak will be noticed. CARE MUST BE TAKEN THAT THE FUNDAMENTAL PEAK AND NOT THE IMAGE PEAK IS USED FOR ALIGNING THE RECEIVER AT 21 MEGACYCLES. Always back off the trimmer to minimum capacity, then screw down the trimmer (add capacity) until the first peak which is the fundamental and the proper one to use is tuned in. If the trimmer is screwed down beyond the point where the first peak is received, the incorrect image peak will be tuned in. After completing adjustment of the oscillator trimmer at 21 megacycles always check to see if the proper peak has been used. To do this leave test oscillator frequency at 21 megacycles, increase the output of the test oscillator and tune receiver dial to approximately 20 megacycles. Then vary the receiver dial slightly to the right and left of 20 megacycles, and if the fundamental peak was used in aligning at 21 megacycles the test oscillator signal will be heard at approximately 20 megacycles on the receiver dial.

(c) Tune receiver dial and set test oscillator frequency to EXACTLY 18 megacycles.
(d) Adjust 18 M. C. antenna and R. F. trimmers for maximum 18 megacycle test signal response.

ALIGNING 390-140 KILOCYCLE BAND:

(a) Adjust band selector switch for operation on 390 to 140 kilocycle band, tune receiver dial and set test oscillator frequency to EXACTLY 390 kilocycles.

(b) Bring in 390 Kilocycle test signal to maximum output by adjusting 390 K. C. oscillator trimmer.
(c) Tune receiver dial and set test oscillator frequency to EXACTLY 350 kilocycles. Adjust 350 K. C. ant. and R. F. trimmers for maximum sensitivity.
(d) Tune receiver dial and set test oscillator frequency to approximately 150 kilocycles, then while rocking gang condenser slightly to right and left adjust 150 kilocycle oscillator padder for maximum sensitivity.

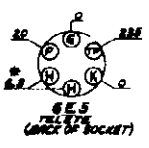

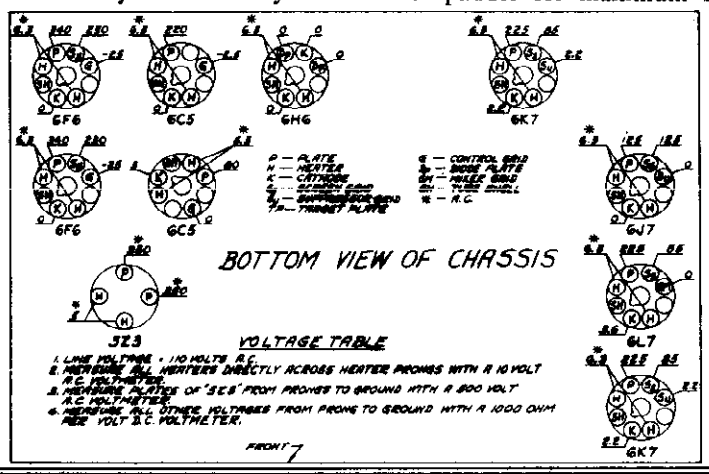

MODEL 810
MODEL 1010

SENT

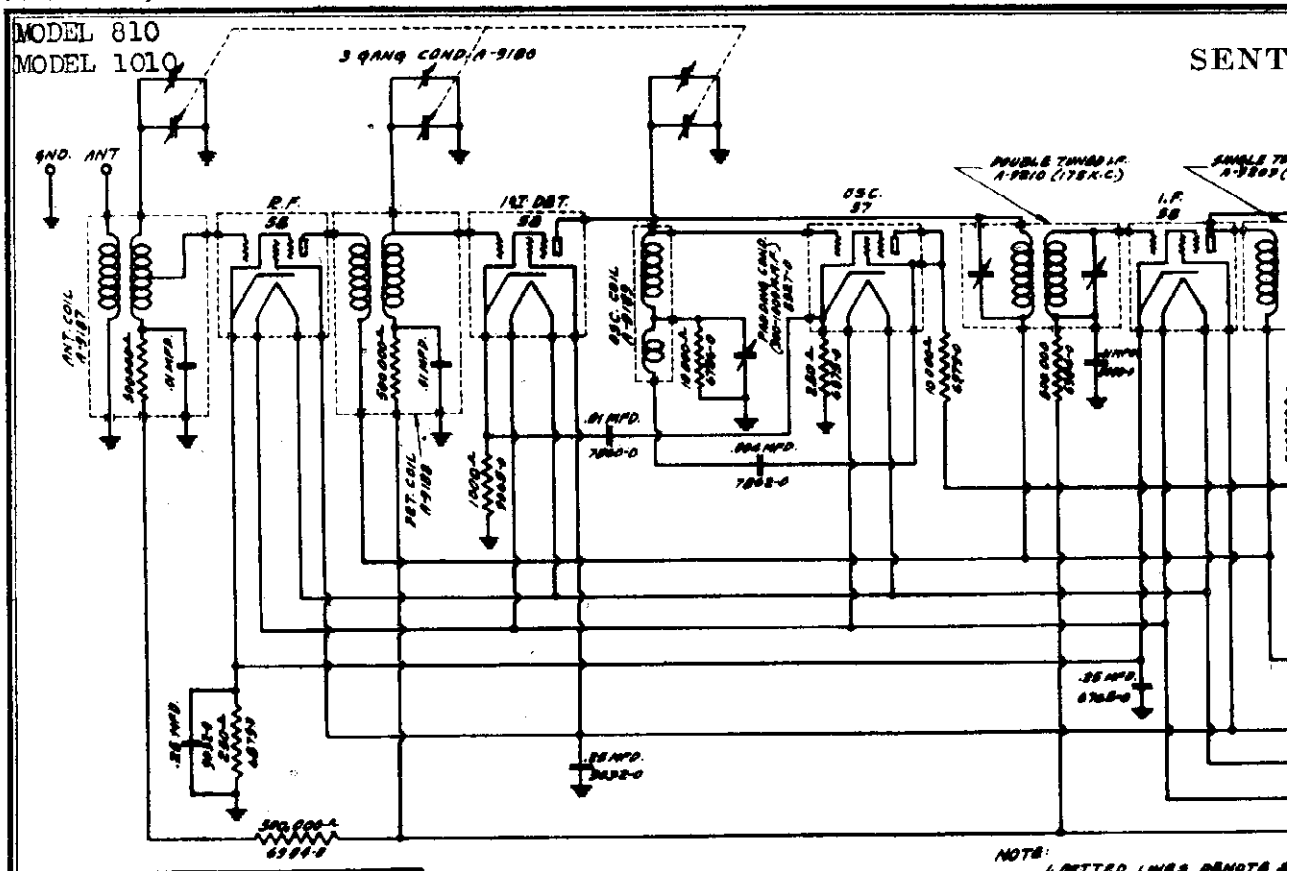

NOTE:
1. DOTTED LINES DENOTE S
2. ALL NUMBERS SHOWN REL PARTS ARE OUR PART NU
3. NUMBERS SHOWN WITH PRE ARE COMPLETE ASSEMBLI
4. WHEN PHONO JKS. ARE USE 2J TUBE (1ST A.F.) IS COMMO POINT MARKED "K"
5. I.F. = 175 K.C.

PART NO. 20046
DATE 4-6-33
THIS SUPERSEDES DRAWING DATED. 10-31-32

Wiring Diagram.
Model 1010 Receiver

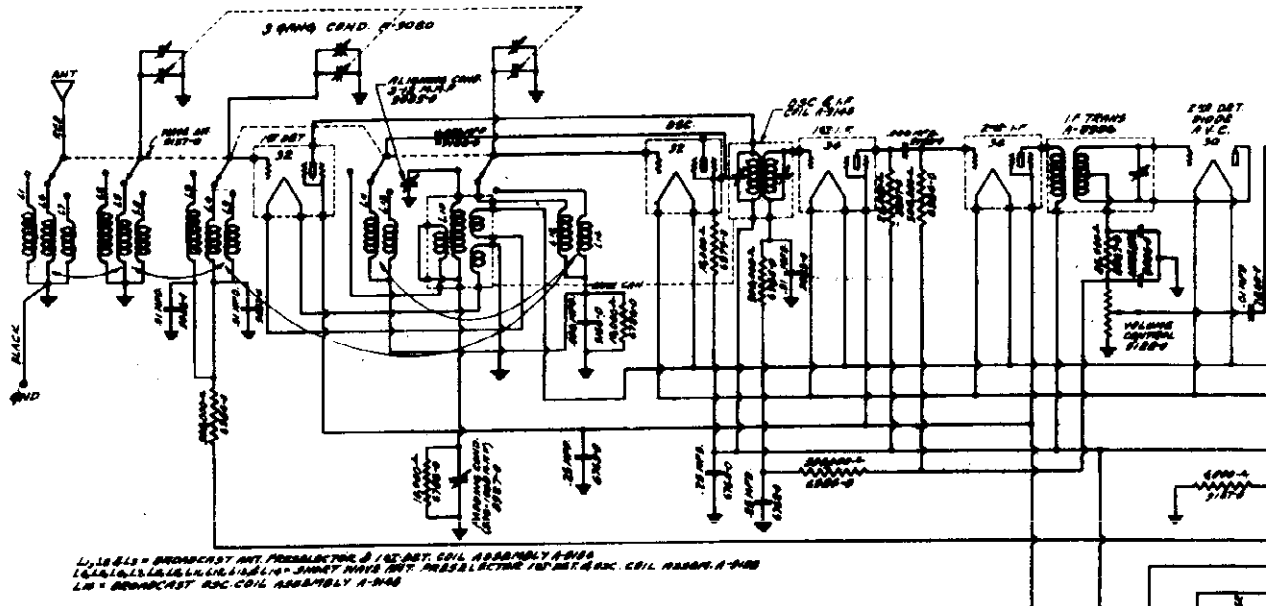

L1, L2 & L3 = BROADCAST ANT. PRESELECTOR & 1ST DET. COIL ASSEMBLY A-9148
L4, L5, L6, L7, L8, L9, L10, L11, L12, L13, L14 = SHORT WAVE ANT. PRESELECTOR 1ST DET. & OSC. COIL ASSEM. A-9148
L15 = BROADCAST OSC. COIL ASSEMBLY A-9148

NOTE:
1. DOTTED LINES DENOTE SHIELDING.
2. ALL NUMBERS SHOWN RELATIVE TO PARTS ARE OUR PART NOS.
3. NUMBERS SHOWN WITH PREFIX "A" ARE COMPLETE ASSEMBLIES.
4. I.F. = 175 K.C.

PART No. 20045
DATE 4-6-33
THIS SUPERSEDES DRAWING DATED 11-1-32

Wiring Diagram
Model 810 Receiver

©John F. Rider, Publisher

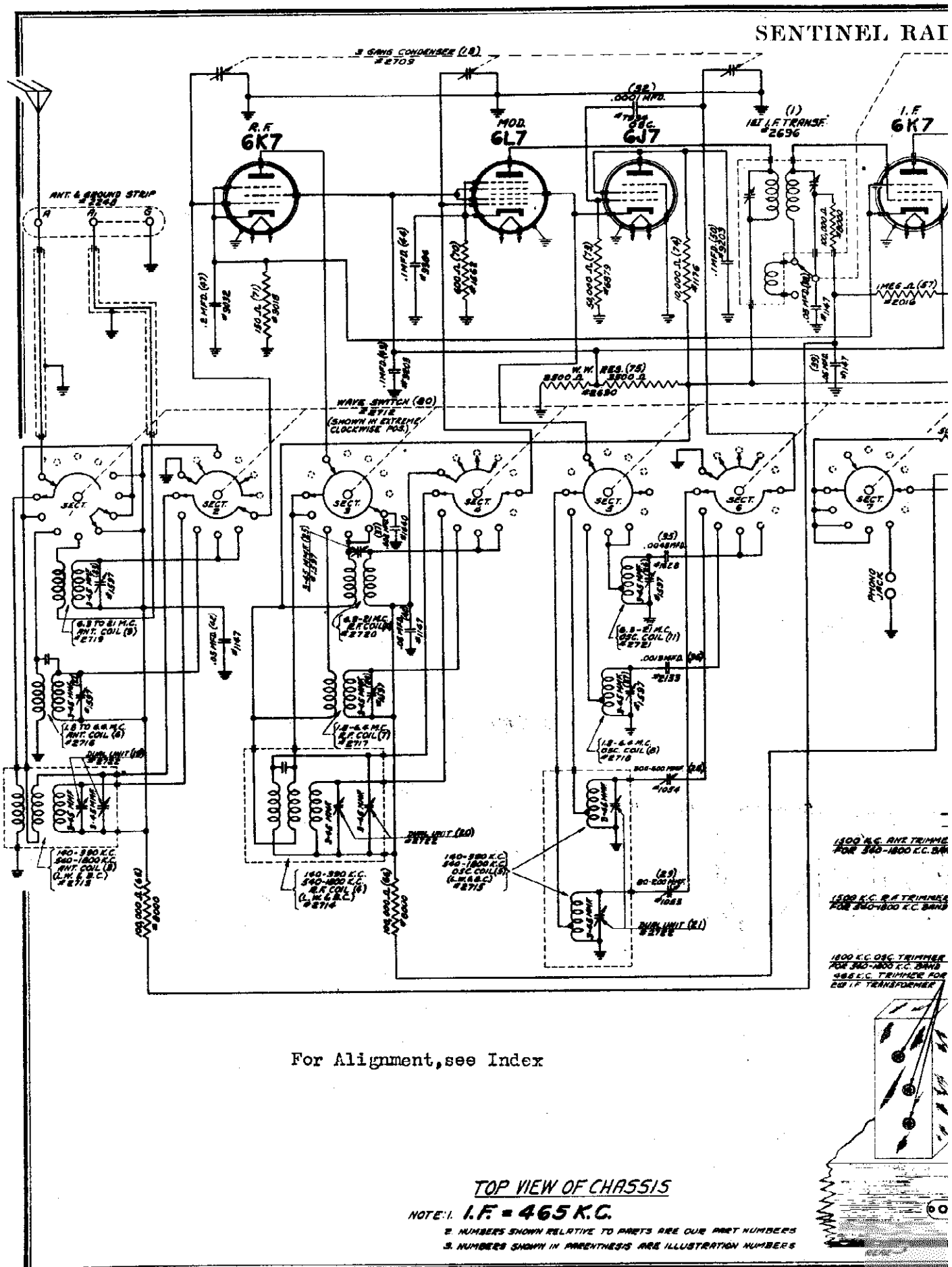

For Alignment, see Index

TOP VIEW OF CHASSIS

NOTE: 1. I.F. = 465 K.C.

2. NUMBERS SHOWN RELATIVE TO PARTS ARE OUR PART NUMBERS

3. NUMBERS SHOWN IN PARENTHESIS ARE ILLUSTRATION NUMBERS

©John F. Rider, Publisher

O CORP.

MODEL 47A
Schematic, Trimmers

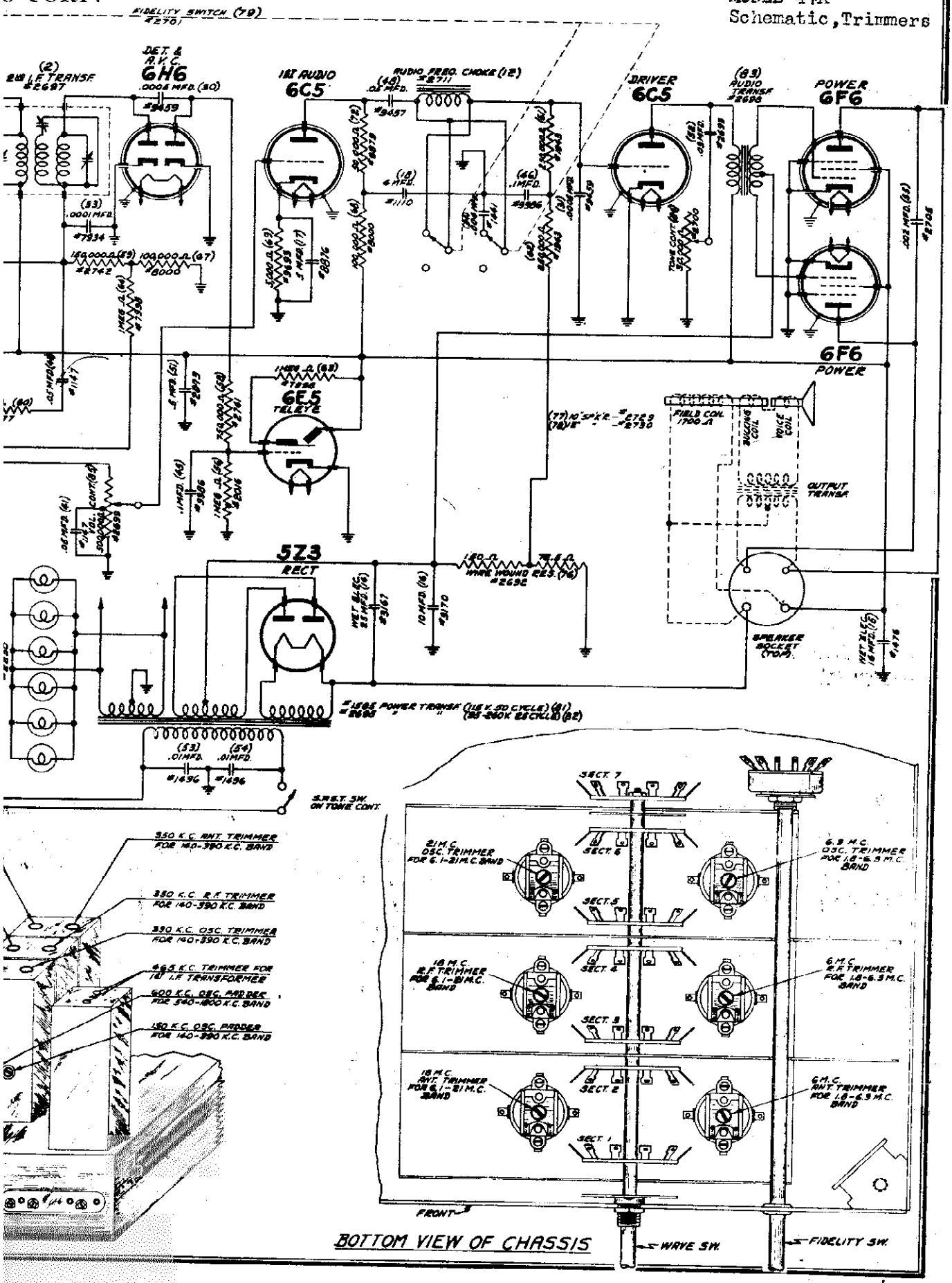

BOTTOM VIEW OF CHASSIS

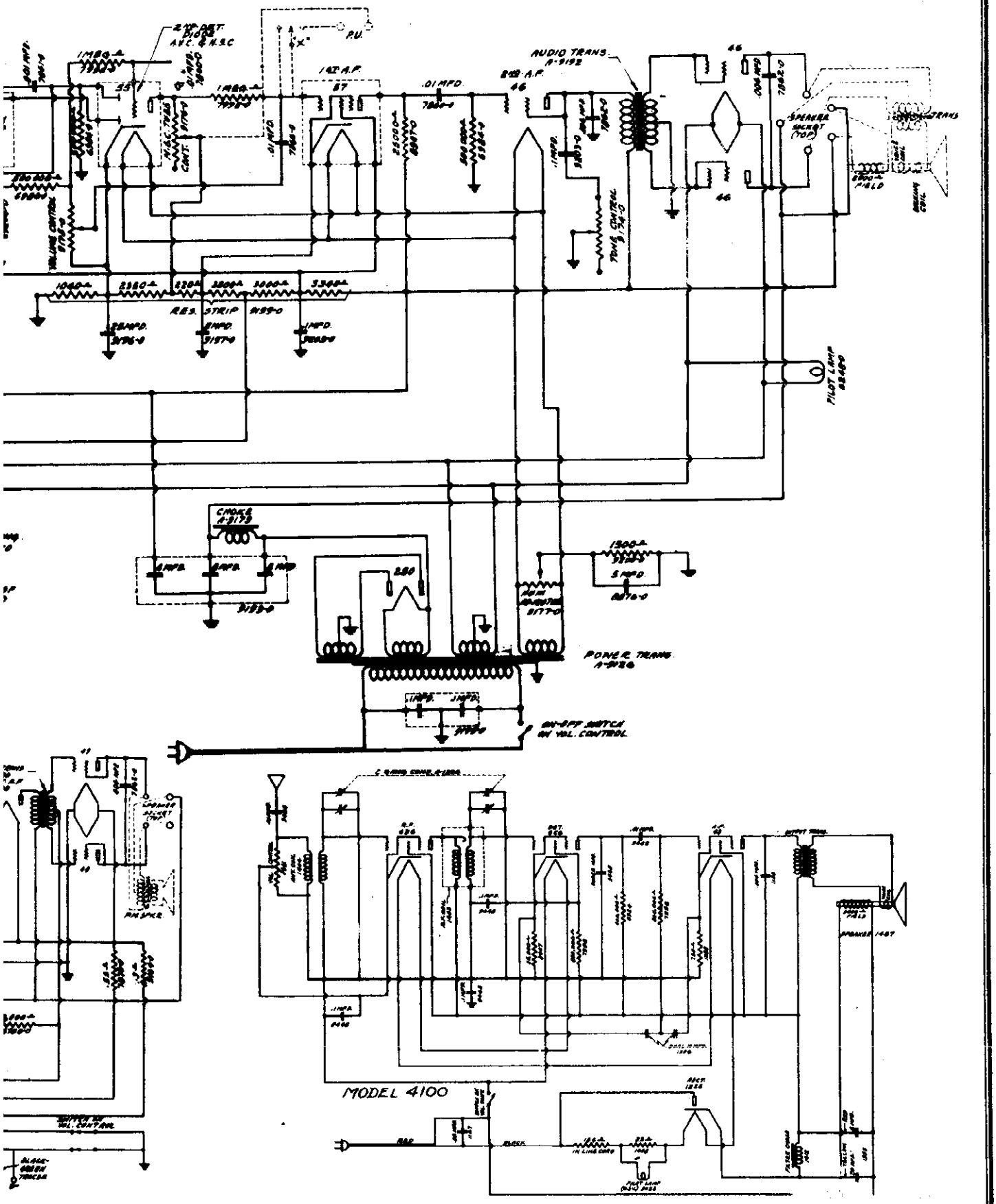
AUDIO TRANS.
A-9192
POWER TRANS.
A-9216
ON-OFF SWITCH
ON VOL. CONTROL
PILOT LAMP
47A80
SPEAKER
SOCKET
(TOP)
MODEL 4100

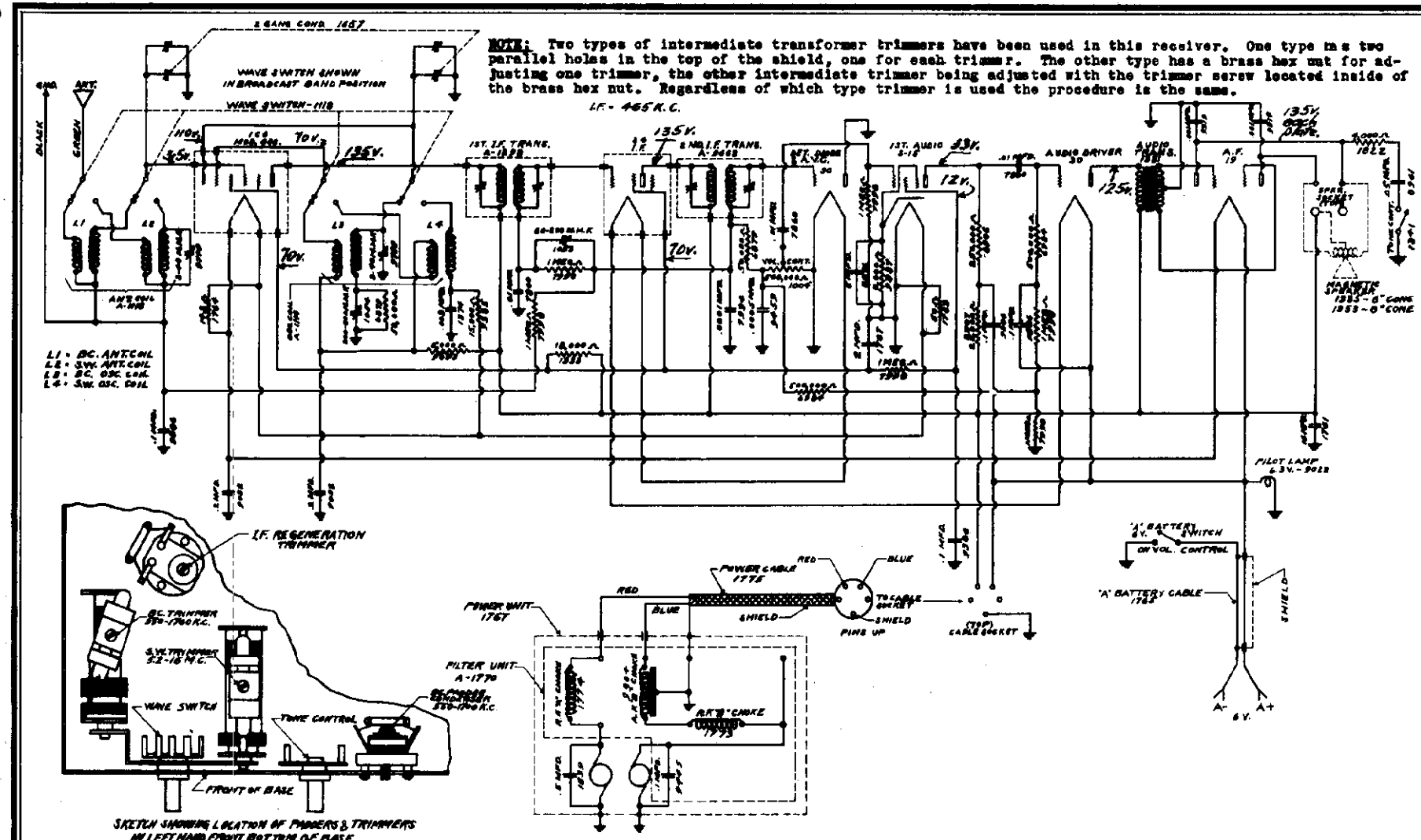

Alignment: Connect generator set to 465 kc. to 1C6 cont.grid.Connect 1 meg. resistor from modulator grid to chassis.Adjust i-f.trimmers of 1st and 2nd transformers in that order. Adjust i-f. regeneration trimmer(under chassis) for maximum sensitivity.

R-F. Connect generator,set to 14 mc., to antenna post through .00025 mf.condenser.Dial of set to 14 mc.-switch to 16-5.2 mc.band.Adjust osc.trimmer (rear section of gang),being sure to use the fundamental.Set switch to broadcast band.Generator and dial to 1400 kc.Adjust the bc.trimmer on osc. coil under chassis.Adjust trimmer on front section of gang for maximum.Set generator to 600 kc.Adjust 600 kc.trimmer through hole in front of chassis. Set band switch to s-w.band.Generator to 14 mc.Also, dial of set.Adjust s-w.trimmer for maximum output, while rocking condenser.

MODEL 6800

SENTINEL RADIO CORP.

Schematic, Voltage Trimmers, Alignment

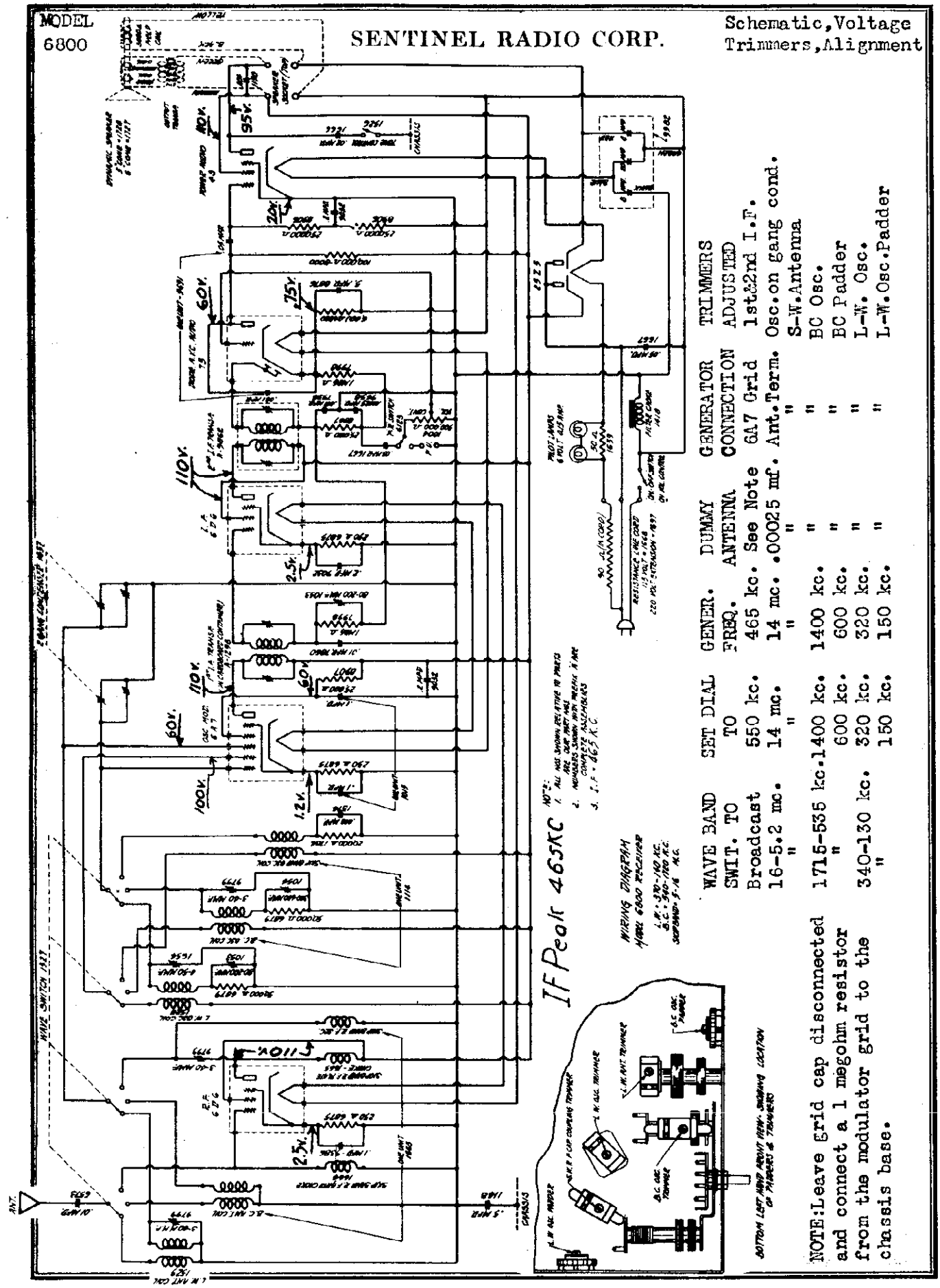

WAVE BAND SWIT. TO	SET DIAL TO	GENER. FREQ.	DUMMY ANTENNA	GENERATOR CONNECTION	TRIMMERS ADJUSTED
Broadcast	550 kc.	465 kc.	See Note	6A7 Grid	1st&2nd I.F.
16-5.2 mc.	14 mc.	14 mc.	.00025 mf.	Ant.Term.	Osc.on gang cond.
"	"	"	"	"	S-W.Antenna
1715-535 kc.	1400 kc.	1400 kc.	"	"	BC Osc.
"	600 kc.	600 kc.	"	"	BC Padder
340-130 kc.	320 kc.	320 kc.	"	"	L-W. Osc.
"	150 kc.	150 kc.	"	"	L-W.Osc.Padder

NOTE: Leave grid cap disconnected and connect a 1 megohm resistor from the modulator grid to the chassis base.

©John F. Rider, Publisher

SENTINEL RADIO CORP.

MODEL 7100
Schematic, Voltage
Trimmers

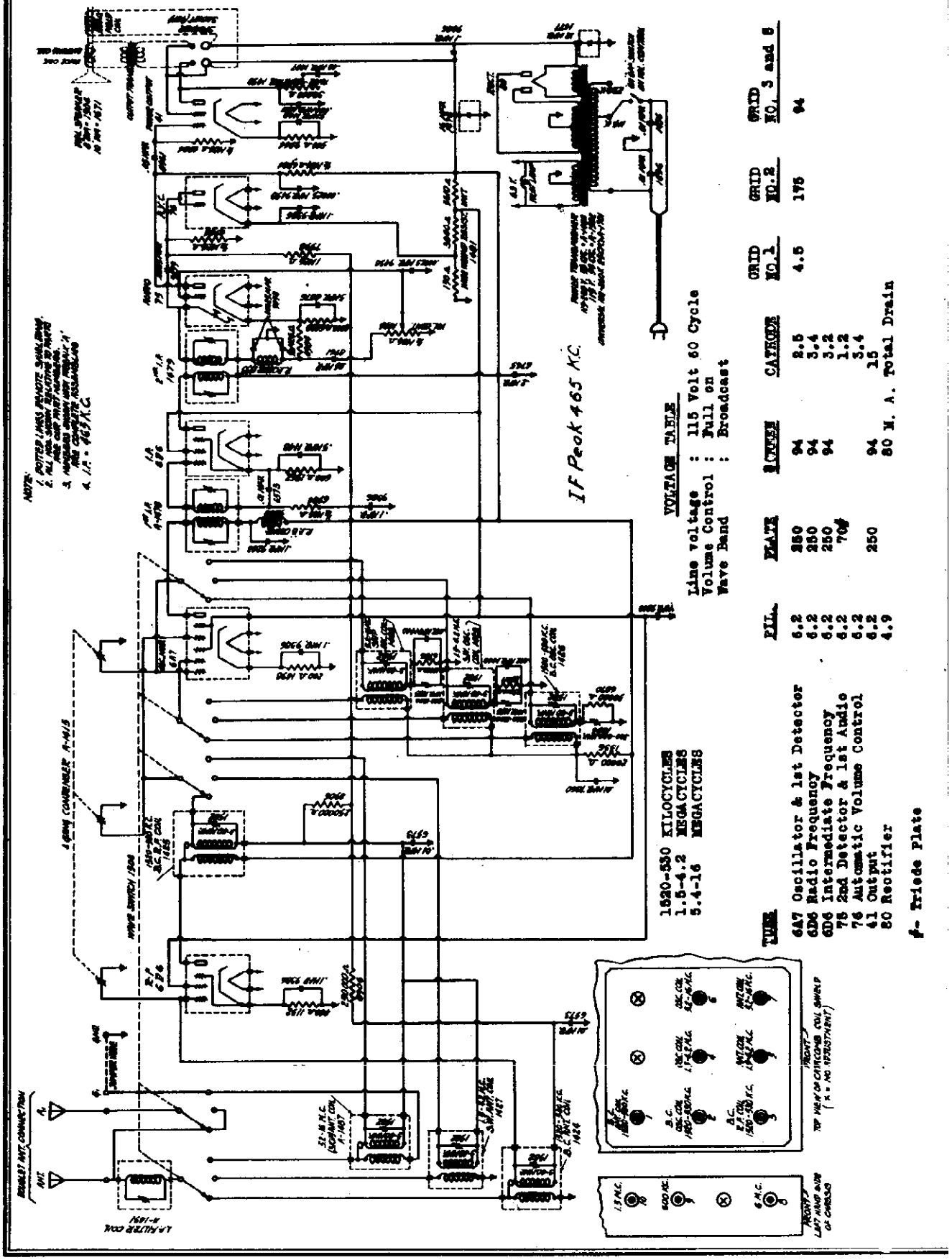

VOLTAGE TABLE

Line voltage : 115 Volt 60 Cycle
Volume Control : Full on
Wave Band : Broadcast

TUBE	FIL.	PLATE	SCREEN	CATHODE	GRID NO. 1	GRID NO. 2	GRID NO. 3 and 6
6A7 Oscillator & 1st Detector	6.2	250	94	8.5	4.5	175	94
6D6 Radio Frequency	6.2	250	94	3.4			
6D6 Intermediate Frequency	6.2	250	94	3.2			
75 2nd Detector & 1st Audio	6.2	70*		1.2			
76 Automatic Volume Control	6.2			3.4			
41 Output	6.2	250	94	15			
80 Rectifier	4.9		80 M. A. Total Drain				

* Triode Plate

©John F. Rider, Publisher

MODEL 7100
Alignment

SENTINEL RADIO CORP.

NOTE: NEVER LIFT THE RECEIVER BY GRASPING THE CATACOMB SHIELD, TO DO SO MAY MOVE THE SHIELD THEREBY UNTUNING THE RECEIVER.

ALIGNMENT PROCEDURE:

It is important when aligning to carefully follow the procedure in the order given, otherwise the receiver will lack sensitivity and the dial calibration will be incorrect. IT IS IMPERATIVE THAT AN ACCURATELY CALIBRATED OSCILLATOR BE USED WITH SOME TYPE OF OUTPUT MEASURING DEVICE.

INTERMEDIATE ALIGNMENT:

1. Connect the high side of the oscillator output to the control grid of the 6A7 tube, leaving the grid cap disconnected. Connect the ground side of the oscillator to the receiver chassis.

2. Set the test oscillator frequency to 465 kilocycles. (This must be accurate).

3. Align the first intermediate transformer by turning one of the trimmer screws up and down (increasing and decreasing capacity) until maximum reading is obtained on the output meter, after which adjust the other trimmer screw of the same transformer for maximum sensitivity.

4. Adjust the other intermediate transformer in the same manner.

NOTE: Two type intermediate transformer trimmers have been used in this receiver. One type has two parallel holes in the top of the shield, one for each trimmer. The other type has a brass hex nut for adjusting one trimmer, the other intermediate trimmer being adjusted with the trimmer screw located inside of the brass hex nut. Regardless of which type trimmer is used, the procedure is the same.

TO ALIGN THE VARIABLE CONDENSER:

Adjustment of the trimmer condensers, located inside of and accessible through the holes found in the top of the catacomb shield (mounted on top and in the left hand front corner of the receiver) will be referred to by numbers as indicated on the circuit diagram showing the relative location of these trimmers.

1. Connect the high output side of the test oscillator to the receiver antenna post through a 250 MMFD (.00025 MFD) condenser and the ground to the set ground post.

2. Place the band selector switch for operation on the 1520 to 550 kilocycle (broadcast) band. Tune the receiver to exactly 1400 kilocycles on the dial and set the test oscillator frequency to exactly 1400 kilocycles. THEN BRING IN THE 1400 KILOCYCLE SIGNAL TO MAXIMUM OUTPUT BY ADJUSTING THE TRIMMER MARKED NO. 2 ON CATACOMB DIAGRAM, after which adjust No. 1 and No. 3 trimmers in the order named for maximum sensitivity.

3. Leave the band selector switch for operation on the broadcast band (1520 to 550 kilocycles) and tune the receiver and set the oscillator to approximately 600 kilocycles. Then adjust the 600 kilocycle padding condenser No. 9 which is located on and accessible through the hole in the left hand side of the chassis for maximum sensitivity. As this adjustment is quite critical, it is necessary to rock the variable condenser slightly to the right and to the left to find the point of greatest sensitivity.

4. Recheck the alignment at 1400 kilocycles as the 600 kilocycle adjustment may have changed the alignment at 1400 kilocycles.

5. Place the band selector switch for operation on the 1.5 to 4.2 megacycle band and set the test oscillator frequency and tune the receiver dial to exactly 3.8 megacycles. THEN TUNE IN THIS 3.8 MEGACYCLE SIGNAL TO MAXIMUM OUTPUT BY ADJUSTING CATACOMB TRIMMER NO. 4, next adjust trimmer No. 5 for maximum sensitivity.

6. With the band selector switch in the same position (1.5 to 4.2 megacycle band) tune the receiver dial and set the oscillator frequency to approximately 1.7 megacycles and then while rocking the variable condenser slightly to the right and left, adjust the 1.7 megacycle trimmer No. 10 (located on the left hand side of the chassis) for maximum sensitivity.

7. Recheck 3.8 megacycle adjustments.

8. Adjust the band selector switch for operation on the 5.2 to 16 megacycle band and tune the receiver dial and set the oscillator frequency to exactly 15 megacycles. When adjusting catacomb trimmer No. 6 two peaks (the fundamental and the image peak) will be noticed. CARE MUST BE TAKEN SO THAT THE FUNDAMENTAL PEAK AND NOT THE IMAGE PEAK IS USED FOR ALIGNING THE RECEIVER AT 15 MEGACYCLES. First back off catacomb trimmer No. 6 to minimum capacity, next screw down the trimmer (add capacity) until the first peak which is the fundamental and the one you are to use is tuned in. If the trimmer is screwed down beyond the point where this first peak is received the incorrect image peak will be tuned in. When the first peak has been located adjust catacomb trimmer No. 6 to BRING IN THE 15 MEGACYCLE SIGNAL TO MAXIMUM OUTPUT. After completing this adjustment always check to see if the proper peak has been used. To do this leave the test oscillator frequency at 15 megacycles and increase the output of the test oscillator, then tune the receiver dial to approximately 14 megacycles. Vary the receiver dial slightly to the right and left of 14 megacycles and if the fundamental peak was used in aligning at 15 megacycles the test oscillator signal will be heard at approximately 14 megacycles on the set dial. If it is not possible to receive the signal then the fundamental peak was not used and the 15 megacycle adjustment of trimmer No. 6 must be gone over and properly adjusted. After correctly completing catacomb trimmer No. 6 adjustment adjust catacomb trimmer No. 7 to maximum sensitivity. Should two peaks be noticed with this trimmer always adjust trimmer No. 7 to the one that requires the most capacity to tune in.

9. Leave the band selector switch for operation on 5.4 to 16 megacycle band, set the oscillator frequency and tune the receiver dial to approximately 6 megacycles. While rocking the variable condenser slightly to the right and left, adjust the 6 megacycle trimmer No. 8 (located on the left hand side of the chassis) for maximum sensitivity.

10. Recheck 15 megacycle adjustments.

11. Some code and aircraft signals are broadcast on a frequency exactly the same or near the IF frequency of the receiver. To eliminate interference from these signals a 465 kilocycle filter (mounted in the coil shield located underneath and towards the front of the chassis) is incorporated in the set. To adjust, set the oscillator frequency (with oscillator output connected to set antenna and ground) TO EXACTLY 465 KILOCYCLES turn the receiver on and and adjust the trimmer located on and accessible through the top of the filter shield for MINIMUM 465 KILOCYCLE SIGNAL.

MODEL 7100B
Schematic, Voltage
Trimmers

SENTINEL

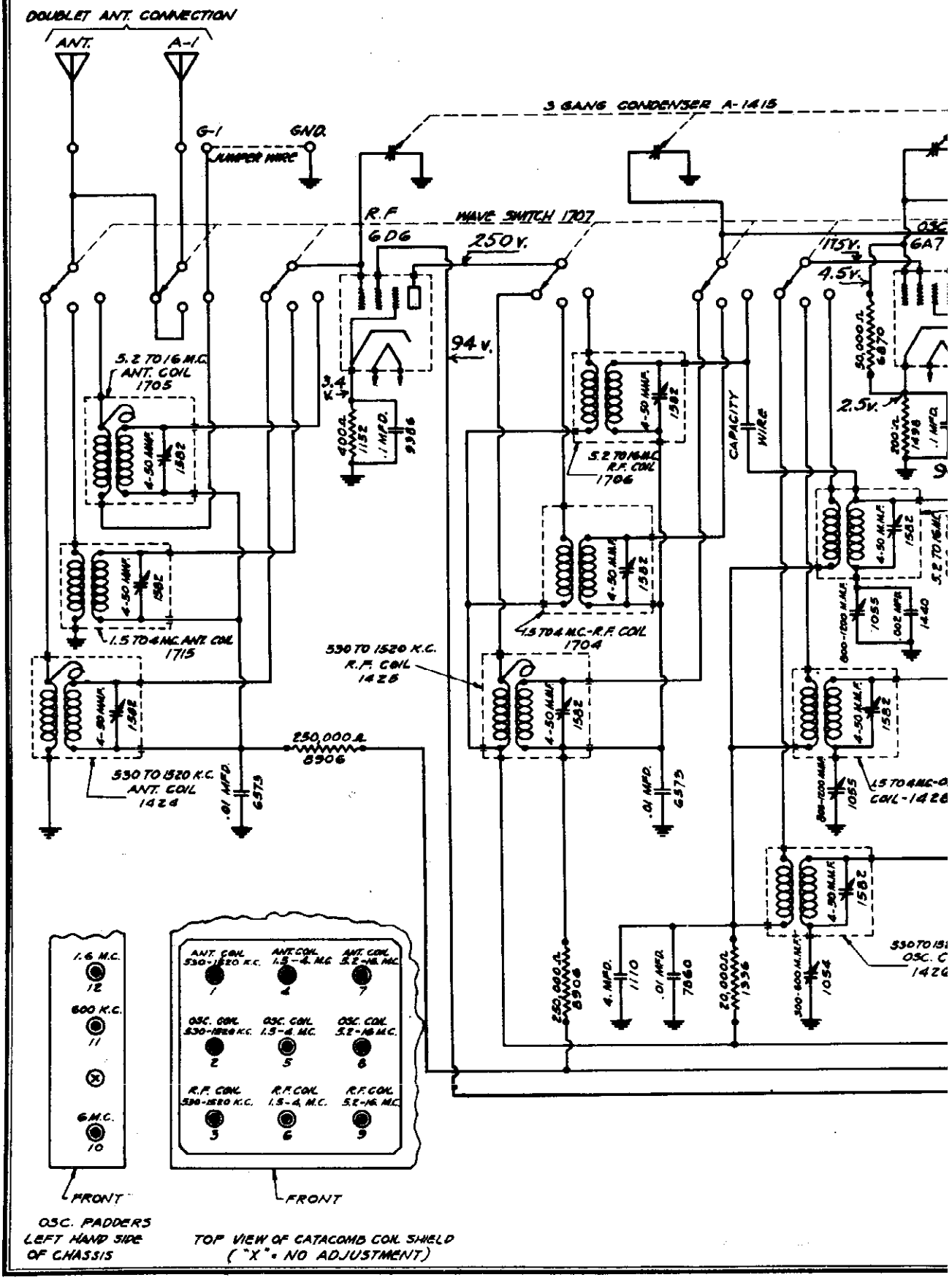

©John F. Rider, Publisher

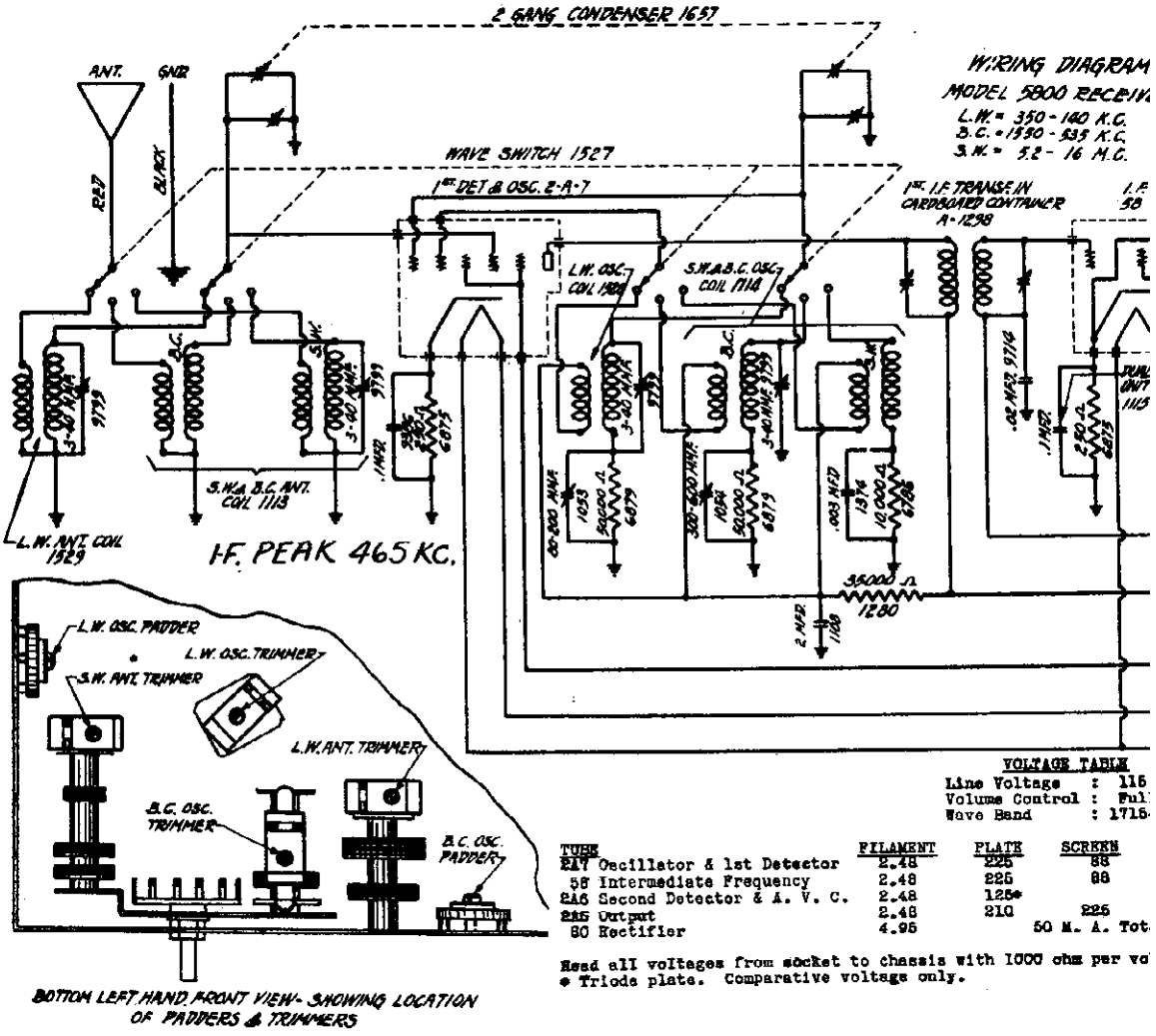

VOLTAGE TABLE

Line Voltage : 115
Volume Control : Ful
Wave Band : 1715

TUBE	FILAMENT	PLATE	SCREEN
2A7 Oscillator & 1st Detector	2.48	225	88
58 Intermediate Frequency	2.48	225	88
2A6 Second Detector & A. V. C.	2.48	125*	
2A5 Output	2.48	210	225
80 Rectifier	4.95		50 M. A. Tot

Read all voltages from socket to chassis with 1000 ohm per vo
* Triode plate. Comparative voltage only.

INTERMEDIATE ALIGNMENT:

1. Connect the high side of the oscillator output to the control grid of the 2A7 tube. Leave the grid ca disconnected and connect a 1 meg ohm resistor from the modulator grid to the chassis base. Connect the ground side of the oscillator to the receiver ground post.

2. Set the test oscillator frequency to 465 kilocycles. (This must be accurate).

3. Align the first intermediate transformer by turning one of the trimmer screws up and down (increasing and decreasing capacity) until maximum reading is obtained on the output meter, after which adjust the other trimmer screw of the same transformer for maximum sensitivity.

4. Adjust the other intermediate transformers in the same manner.

TO ALIGN THE VARIABLE CONDENSER:

1. Connect the high output side of the test oscillator through a .00025 Mfd. condenser to the set antenn lead and the ground to the set ground.

2. Place the band selector switch for operation on the 16 to 5.2 megacycle band, tune the receiver to ex actly 14 megacycles on the receiver dial, and set the test oscillator frequency to exactly 14 megacycles. THEN TUNE IN THE 1400 KILOCYCLE SIGNAL TO MAXIMUM OUTPUT BY ADJUSTING THE TRIMMER CONDENSER LOCATED ON TOP OF THE OSCILLATOR SECTION OF THE GANG CONDENSER. Looking at the front of the receiver the first section of the gang condenser tunes the antenna coil and the second section the oscillator coil. When adjusting this trimmer two peaks (the fundamental and the image peak) will be noticed. CARE MUST BE TAKEN SO THAT THE FUNDAMENTAL PEAK AND NOT THE IMAGE PEAK IS USED FOR ALIGNING THE RECEIVER AT 14 MEGACYCLES. First back off the trimmer to minimum capacity, next screw down the trimmer (add capacity) until the first peak which is t fundamental and the one you are to use is tuned in. If the trimmer is screwed down beyond the point where this first peak is received the incorrect image peak will be tuned in. When the first peak has been locate adjust the trimmer to BRING IN THE 14 MEGACYCLE SIGNAL TO MAXIMUM OUTPUT. After completing this adjustment always check to see if the proper peak has been used. To do this leave the test oscillator frequency fre quency at 14 megacycles and increase the output of the test oscillator and then tune the receiver dial to a proximately 13 megacycles. Vary the receiver dial slightly to the right and left of 13 megacycles and if the fundamental peak was used in aligning at 14 megacycles the test oscillator signal will be heard at ap proximately 13 megacycles on the set dial. If it is not possible to receive the signal then the fundamenta

©John F. Rider, Publisher

DIO CORP.

MODEL 5800
Schematic, Voltage
Trimmers, Alignment

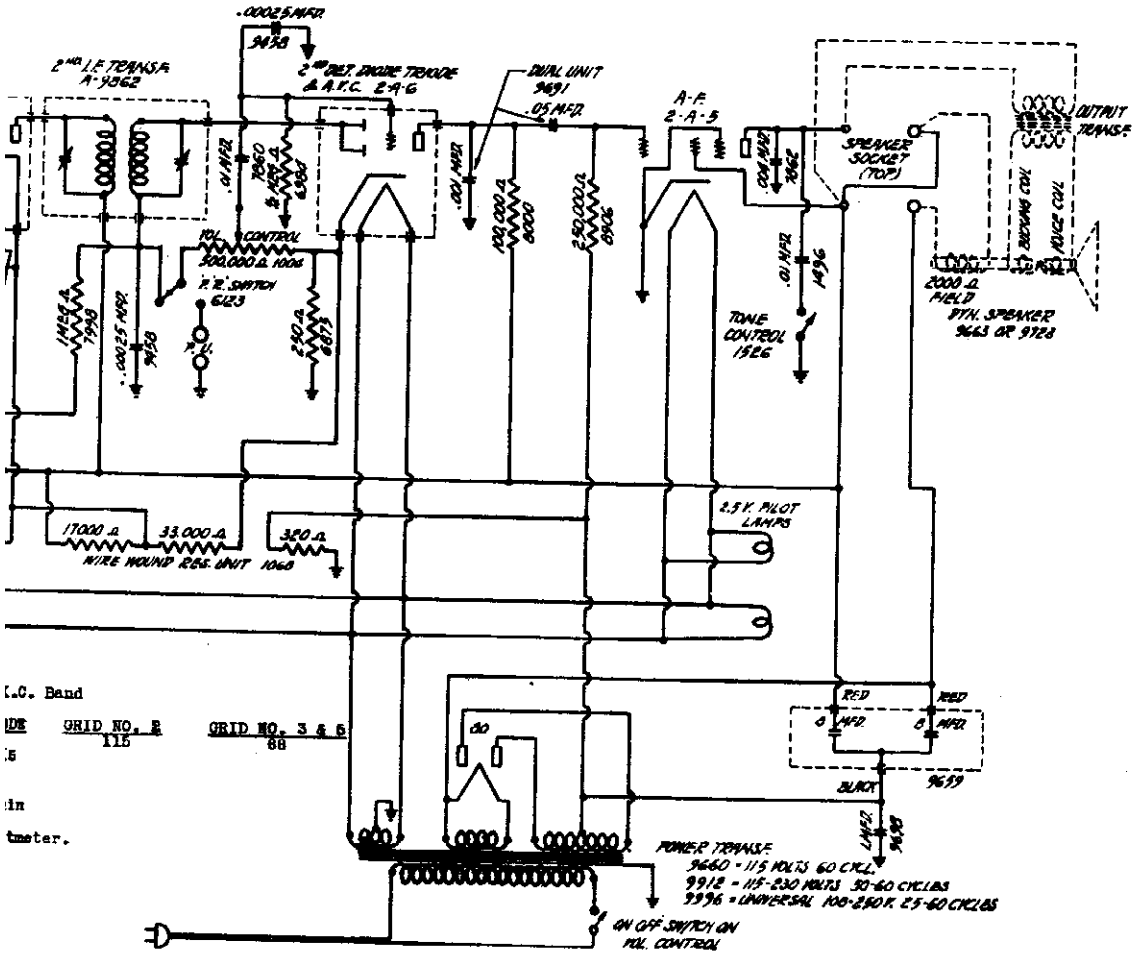

.C. Band		
DE	GRID NO. 2 115	GRID NO. 3 & 5 88
5		
in		
meter.		

eak was not used and the 14 megacycle adjustment of the trimmer must be gone over and properly adjusted. FTER CORRECTLY COMPLETING THE 14 MEGACYCLE ALIGNMENT TURN THE RECEIVER ON END AND WHILE ROCKING THE GANG ONDENSER SLIGHTLY TO THE RIGHT AND LEFT ADJUST THE TRIMMER CONDENSER MOUNTED ON THE SW (5.2-16 M.C. band) NTENNA COIL LOCATED UNDERNEATH THE CHASSIS FOR MAXIMUM SENSITIVITY.

3. Adjust the band selector switch for operation on the 1715 to 535 kilocycle band and set the receiver al and the test oscillator frequency to EXACTLY 1400 KILOCYCLES. Then turn the receiver chassis on end d bring in the 1400 kilocycle signal to maximum output by adjusting the trimmer condenser mounted on the C. (1715-535 K.C. band) oscillator coil. Next adjust the trimmer condenser mounted on top of the first ction of the gang condenser for maximum 1400 kilocycle signal sensitivity.

4. Leave the band selector switch for operation on the 1715 to 535 kilocycle band and tune the receiver d set the test oscillator frequency to approximately 600 kilocycles. Then while rocking the condenser ightly to the right and left adjust the 600 kilocycle B. C. padding condenser, which is located on and ac- ssible through the hole in the front of the chassis, for maximum sensitivity.

5. Recheck the 1400 kilocycle adjustment.

6. Recheck the 14 megacycle adjustment.

7. Place the band selector switch for operation on the 340 to 130 kilocycle band, and set the test os- llator frequency and the receiver dial to EXACTLY 320 KILOCYCLES. THEN BRING IN THIS 320 KILOCYCLE SIGNAL MAXIMUM OUTPUT BY ADJUSTING THE TRIMMER CONDENSER LOCATED ON THE L. W. (340-130 K.C. band) oscillator il located underneath the receiver chassis, after which adjust the trimmer condenser mounted on the L. W. 40-130 K.C. band) antenna coil also located underneath the chassis.

8. Leave the band selector switch for operation on the 340 to 130 kilocycle band and tune the receiver il and set the test oscillator frequency to approximately 150 kilocycles. Then while rocking the variable ndenser slightly to the right and left adjust the L. W. oscillator coil padding condenser, located on and ssible through the hole in the right hand side of the chassis, for maximum sensitivity.

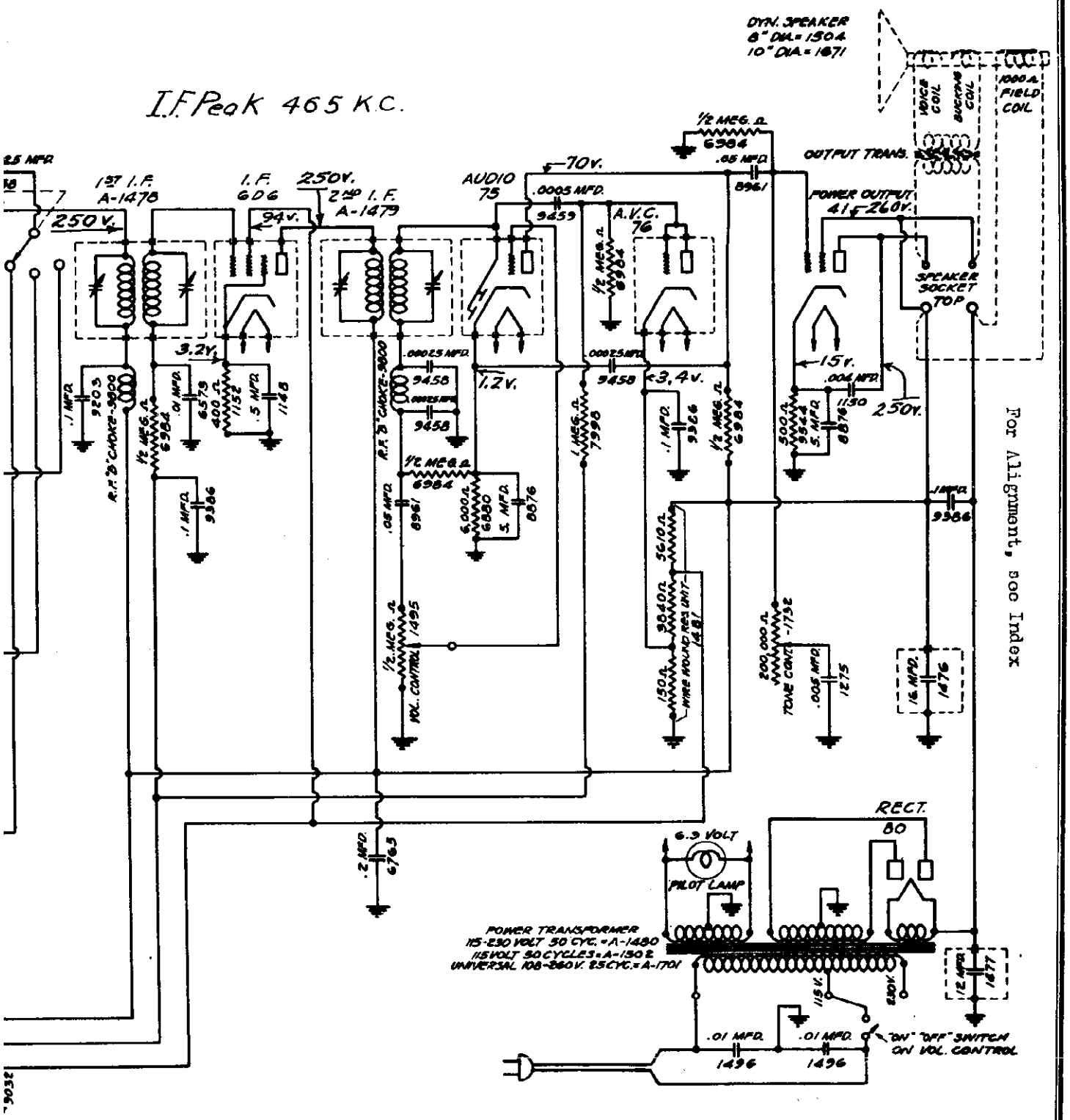

NOTE:

1. ALL NOS. SHOWN RELATIVE TO PARTS ARE OUR PART NUMBERS.
2. NUMBERS SHOWN WITH PREFIX "A" ARE COMPLETE ASSEMBLIES.
3. I.F. = 465 K.C.

SENTINEL RADIO CORP.

MODEL 7100B
Alignment

NOTE: NEVER LIFT THE RECEIVER BY GRASPING THE CATACOMB SHIELD, TO DO SO MAY MOVE THE SHIELD THEREBY DETUNING THE RECEIVER.

ALIGNMENT PROCEDURE:

It is important when aligning to carefully follow the procedure in the order given, otherwise the receiver will lack sensitivity and the dial calibration will be incorrect. IT IS IMPERATIVE THAT AN ACCURATELY CALIBRATED OSCILLATOR BE USED WITH SOME TYPE OF OUTPUT MEASURING DEVICE.

INTERMEDIATE ALIGNMENT:

1. Connect the high side of the oscillator output to the control grid of the 6A7 tube, leaving the grid cap disconnected. Connect the ground side of the oscillator to the receiver chassis.

2. Set the test oscillator frequency to 465 kilocycles. (This must be accurate).

3. Align the first intermediate transformer by turning one of the trimmer screws up and down (increasing and decreasing capacity) until maximum reading is obtained on the output meter, after which adjust the other trimmer screw of the same transformer for maximum sensitivity.

4. Adjust the other intermediate transformer in the same manner.

NOTE: Two type intermediate transformer trimmers have been used in this receiver. One type has two parallel holes in the top of the shield, one for each trimmer. The other type has a brass hex nut for adjusting one trimmer, the other intermediate trimmer being adjusted with the trimmer screw located inside of the brass hex nut. Regardless of which type trimmer is used, the procedure is the same.

TO ALIGN THE VARIABLE CONDENSER:

Adjustment of the trimmer condensers, located inside of and accessible through the holes found in the top of the catacomb shield (mounted on top and in the left hand front corner of the receiver) will be referred to by numbers as indicated on the circuit diagram showing the relative location of these trimmers.

1. Connect the high output side of the test oscillator to the receiver antenna post through a 250 MMFD. (.00025 Mfd.) condenser and the ground to the set ground post.

2. Place the band selector switch for operation on the 1520 to 530 kilocycle (broadcast) band. Tune the receiver to exactly 1400 kilocycles on the dial and set the test oscillator frequency to exactly 1400 kilocycles. THEN BRING IN THE 1400 KILOCYCLE SIGNAL TO MAXIMUM OUTPUT BY ADJUSTING THE TRIMMER MARKED NO. 2 ON CATACOMB DIAGRAM, after which adjust No. 1 and No. 3 trimmers in the order named for maximum sensitivity.

3. Leave the band selector switch for operation on the broadcast band (1520 to 530 kilocycles) and tune the receiver and set the oscillator to approximately 600 kilocycles. Then adjust the 600 kilocycle padding condenser No. 11, which is located on and accessible through the hole in the left hand side of the chassis, for maximum sensitivity. As this adjustment is quite critical it is necessary to rock the variable condenser slightly to the right and to the left to find the point of greatest sensitivity.

4. Recheck the alignment at 1400 kilocycles as the 600 kilocycle adjustment may have changed the alignment at 1400 kilocycles.

5. Place the band selector switch for operation on the 1.5 to 4.2 megacycle band and set the test oscillator frequency and tune the receiver dial to exactly 3.8 megacycles. THEN TUNE IN THIS 3.8 MEGACYCLE SIGNAL TO MAXIMUM OUTPUT BY ADJUSTING CATACOMB TRIMMER NO. 5, next adjust trimmers No. 4 and 6 for maximum sensitivity.

6. With the band selector switch in the same position (1.5 to 4.2 megacycle band) tune the receiver dial and set the oscillator frequency to approximately 1.6 megacycles, and then while rocking the variable condenser slightly to the right and left adjust the 1.6 megacycle trimmer No. 12 (located on the left hand side of the chassis) for maximum sensitivity.

7. Recheck 3.8 megacycle adjustments.

8. Adjust the band selector switch for operation on the 5.2 to 16 megacycle band and tune the receiver dial and set the oscillator frequency to exactly 15 megacycles. When adjusting catacomb trimmer No. 8 two peaks (the fundamental and the image peak) will be noticed. CARE MUST BE TAKEN SO THAT THE FUNDAMENTAL PEAK AND NOT THE IMAGE PEAK IS USED FOR ALIGNING THE RECEIVER AT 15 MEGACYCLES. First back off catacomb trimmer No. 8 to minimum capacity, next screw down the trimmer (add capacity) until the first peak which is the fundamental and the one you are to use is tuned in. If the trimmer is screwed down beyond the point where this first peak is received the incorrect image peak will be tuned in. When the first peak has been located adjust catacomb trimmer No. 8 to BRING IN THE 15 MEGACYCLE SIGNAL TO MAXIMUM OUTPUT. After completing this adjustment always check to see if the proper peak has been used. To do this leave the test oscillator frequency at 15 megacycles and increase the output of the test oscillator, then tune the receiver dial to approximately 14 megacycles. Vary the receiver dial slightly to the right and left of 14 megacycles and if the fundamental peak was used in aligning at 15 megacycles the test oscillator signal will be heard at approximately 14 megacycles on the set dial. If it is not possible to receive the signal then the fundamental peak was not used and the 15 megacycle adjustment of trimmer No. 8 must be gone over and properly adjusted. After correctly completing catacomb trimmer No. 8 adjustment, adjust catacomb trimmers No. 7 and 9 for maximum sensitivity.

9. Leave the band selector switch for operation on 5.2 to 16 megacycle band, set the oscillator frequency and tune the receiver dial to approximately 6 megacycles. While rocking the variable condenser slightly to the right and left, adjust the 6 megacycle trimmer No. 10 (located on the left hand side of the chassis) for maximum sensitivity.

10. Recheck 15 megacycle adjustments.

©John F. Rider, Publisher

MODEL 8100B
Alignment, Trimmers

SENTINEL RADIO CORP.

INTERMEDIATE ALIGNMENT:

1. Connect the high side of the oscillator output to the control grid of the 6A7 oscillator & modulator tube. Leave the grid cap disconnected and connect a 1 meg ohm resistor from the modulator grid to the chassis base.

2. Set the test oscillator frequency to 465 kilocycles. (This must be accurate).

3. Align the first intermediate transformer by turning one of the trimmer screws accessible through the holes in the top of the coil shield up and down (increasing and decreasing capacity) until maximum reading is obtained on the output meter, after which adjust the other trimmer screw of the same transformer for maximum sensitivity.

4. Adjust the other intermediate transformer in the same manner.

TO ALIGN THE VARIABLE CONDENSER: It is important when aligning the gang condensers, padder condensers, and trimmer condensers to follow the procedure carefully, otherwise the receiver will be insensitive and the dial calibration will be incorrect. The trimmer and padder condensers will be referred to by number as indicated on the diagram which shows their relative locations on the chassis.

1. Connect the high output side of the test oscillator through a .00025 Mfd. condenser to the set antenna post, and the ground to the set ground.

2. Place the band selector switch for operation on the 10 to 24 megacycle band, tune the receiver dial to EXACTLY 22 MEGACYCLES AND SET THE TEST OSCILLATOR FREQUENCY TO EXACTLY 22 MEGACYCLES. THEN TUNE IN THE 22 MEGACYCLE SIGNAL TO MAXIMUM OUTPUT BY ADJUSTING TRIMMER NO. 14. Next rock the gang condenser slightly to the right and left and adjust trimmers No. 13 and 15 for maximum 22 megacycle signal sensitivity. CARE MUST BE TAKEN SO THAT THE FUNDAMENTAL AND NOT THE IMAGE PEAK IS USED FOR ALIGNING THE RECEIVER AT 22 MEGACYCLES. When adjusting trimmer No. 14 always back off the trimmer to minimum capacity and then screw down the trimmer (add capacity) until the first peak, which is the fundamental and the one you are to use is tuned in. If the trimmer is screwed down beyond the point where the first peak is received, the incorrect image peak will be tuned in. After completing adjustment of trimmers No. 14, 13, and 15 always check to see if the proper peak has been used. To do this leave the test oscillator frequency at 22 megacycles, increase the output of the test oscillator, and tune the receiver dial to approximately 21 megacycles. Vary the receiver dial slightly to the right and left of 21 megacycles, and if the fundamental peak was used in aligning at 22 megacycles the test oscillator signal will be heard at approximately 21 megacycles on the receiver dial. If it is not possible to receive the signal at approximately 21 megacycles, then the fundamental peak was not used and the 22 megacycle adjustment of trimmers No. 13, 14, and 15 must be gone over and properly adjusted.

3. Place the band selector switch for operation on the 4 to 11 megacycle band and set the receiver dial and the test oscillator frequency to EXACTLY 9.5 MEGACYCLES. When adjusting trimmer No. 10 the fundamental and the image peak will be noticed. CARE MUST BE TAKEN SO THAT THE FUNDAMENTAL AND NOT THE IMAGE PEAK IS USED FOR ALIGNING THE RECEIVER AT 9.5 MEGACYCLES. First back off trimmer No. 10 to minimum capacity then screw down the trimmer (add capacity) until the first peak, which is the fundamental and the proper one to use is tuned in. When the first peak has been located adjust trimmer No. 10 TO BRING IN THE 9.5 MEGACYCLE SIGNAL TO MAXIMUM OUTPUT. Next adjust trimmers No. 9 and 11 for maximum 9.5 megacycle sensitivity. After completing adjustment of trimmers No. 10, 11, and 9 always check to see if the proper peak has been used. To do this leave the test oscillator frequency at 9.5 megacycles and increase the test oscillator output. Vary the receiver dial slightly to the right and left of 8.5 megacycles and if the fundamental peak of trimmer No. 10 was used in aligning at 9.5 megacycles the test oscillator signal will be heard at approximately 8 megacycles on the receiver dial. If it is not possible to receive the signal, then the fundamental peak was not used and the 9.5 megacycle adjustment of trimmers No. 9, 10, and 11 must be gone over and properly adjusted.

4. Leave the band selector switch for operation on the 4 to 11 megacycle band and tune the receiver and set the test oscillator frequency to approximately 4.6 megacycles. Then while rocking the gang condenser slightly to the right and left adjust padder condenser No. 12 for maximum sensitivity.

5. Place the band selector switch for operation on the 1.5 to 4.2 megacycle band and tune the receiver dial and set the test oscillator frequency to EXACTLY 3.8 MEGACYCLES. THEN BRING IN THE 3.8 MEGACYCLE SIGNAL TO MAXIMUM OUTPUT BY ADJUSTING TRIMMER NO. 6, after which adjust trimmers No. 5 and 7 for maximum 3.8 megacycle signal sensitivity.

6. With the band selector switch in the same position (1.5 to 4.2 megacycle band) tune the receiver dial and set the test oscillator frequency to approximately 1.6 megacycles. Then while rocking the gang condenser slightly to the right and left, adjust padder condenser No. 8 for maximum 1.6 megacycle signal sensitivity.

7. Adjust the band selector switch for operation on the 1550 to 535 kilocycle band, tune the receiver dial and set the test oscillator frequency to EXACTLY 1400 KILOCYCLES. THEN BRING IN THE 1400 KILOCYCLE SIGNAL TO MAXIMUM OUTPUT BY ADJUSTING TRIMMER NO. 2, after which adjust trimmers No. 1 and 3 for maximum sensitivity.

8. With the band selector switch set for operation on the 1550 to 535 kilocycle band tune the receiver dial and set the test oscillator frequency to approximately 600 kilocycles. Next while rocking the gang condenser slightly to the right and left adjust padder condenser No. 4 for maximum 600 kilocycle signal response.

535-1550 K.C. BAND	1.5-4.2 M.C. BAND
1 - ANT. TRIMMER	5 - ANT. TRIMMER
2 - OSC. " "	6 - OSC. " "
3 - R.F. " "	7 - R.F. " "
4 - 600 K.C. OSC. PADDER	8 - 1.6 M.C. OSC. PADDER

4.0-11 M.C. BAND	10-24 M.C. BAND
9 - ANT. TRIMMER	13 - ANT. TRIMMER
10 - OSC. " "	14 - OSC. " "
11 - R.F. " "	15 - R.F. " "
12 - 4.6 M.C. OSC. PADDER	

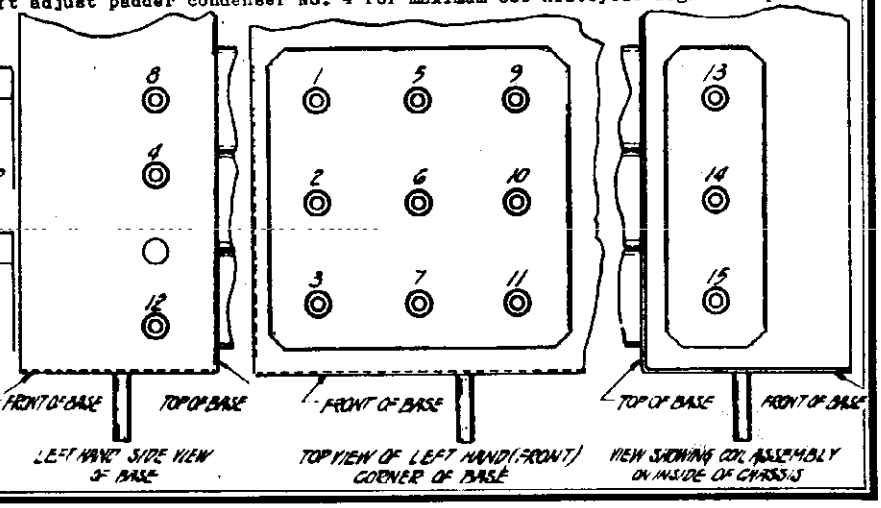

© John F. Rider Publisher

MODEL 9100
Schematic, Voltage
Trimmers, Battery Data

SENTINEL R

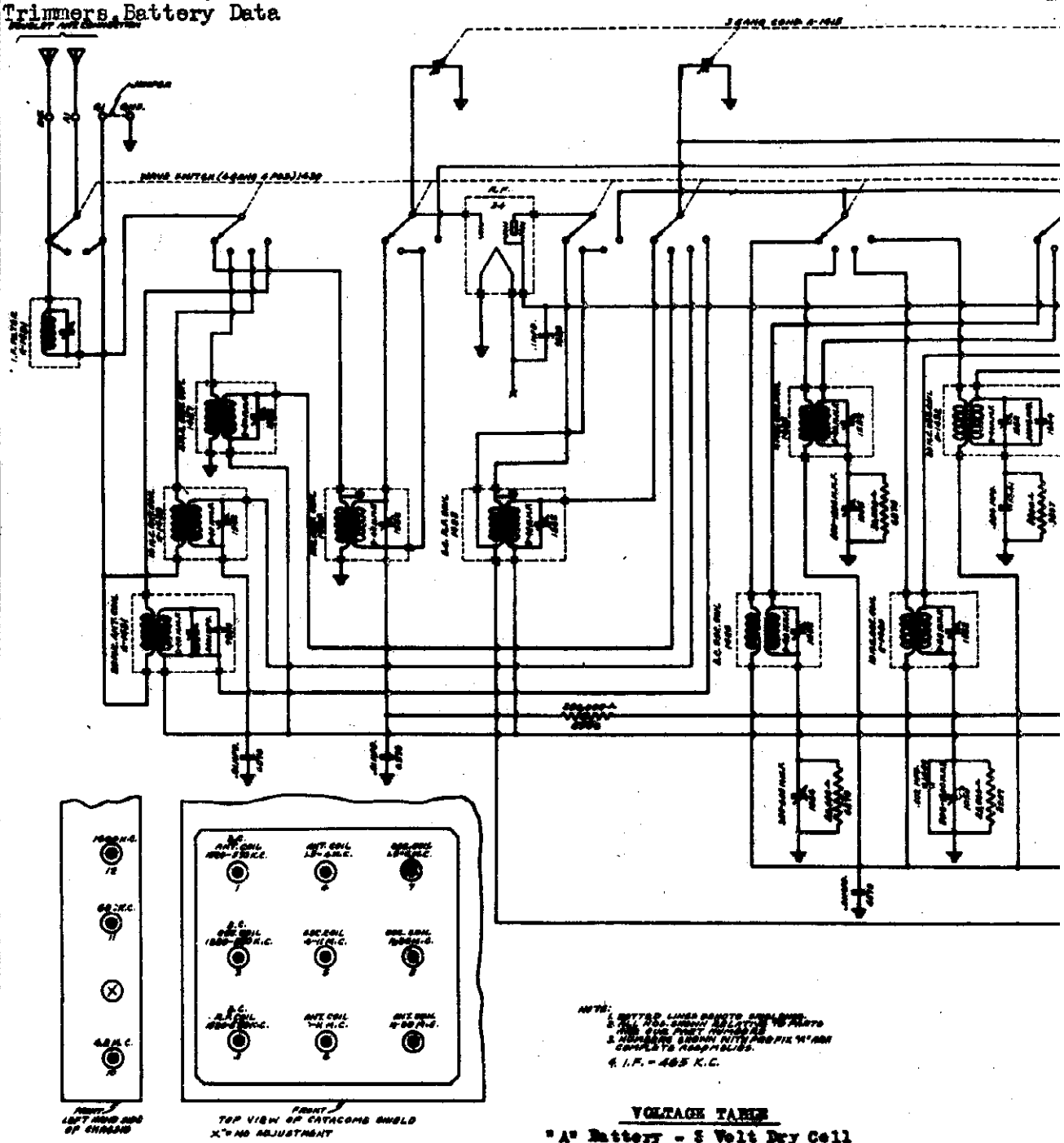

TOP VIEW OF CATACOMB SHIELD
X "O" NO ADJUSTMENT

NOTE:
4. I.F. = 465 K.C.

VOLTAGE TABLE

"A" Battery - 2 Volt Dry Cell
"B" Battery - 3 45 Volt "B" Battery
"C" Battery - 1 22½ Volt "C" Battery

TUBE		FILAMENT	PLATE	SCREEN	GRID NO. 2	GRID NO.
10S	Oscillator & 1st Detector	1.9	135		135	75
24	Radio Frequency	1.9	135	75		
24	1st Intermediate Frequency	1.9	135	75		
34	2nd Intermediate Frequency	1.9	135	75		
30	2nd Detector & AVC	1.9				
30	1st Audio	1.9	80#	(Total "A" Drain 600 M.A.)		
30	Audio Driver	1.9	135	(Total "B" Drain 25 M. A. with		
30	Output	1.9	135			
30	Output	1.9	135			

Comparative voltage only. Read all voltages from socket to chassis with 1,000 ohm
When making voltage checks use batteries that deliver full voltage with the receive

NOTE: NEVER LIFT THE RECEIVE
ING THE RECEIVER.

©John F. Rider, Publisher

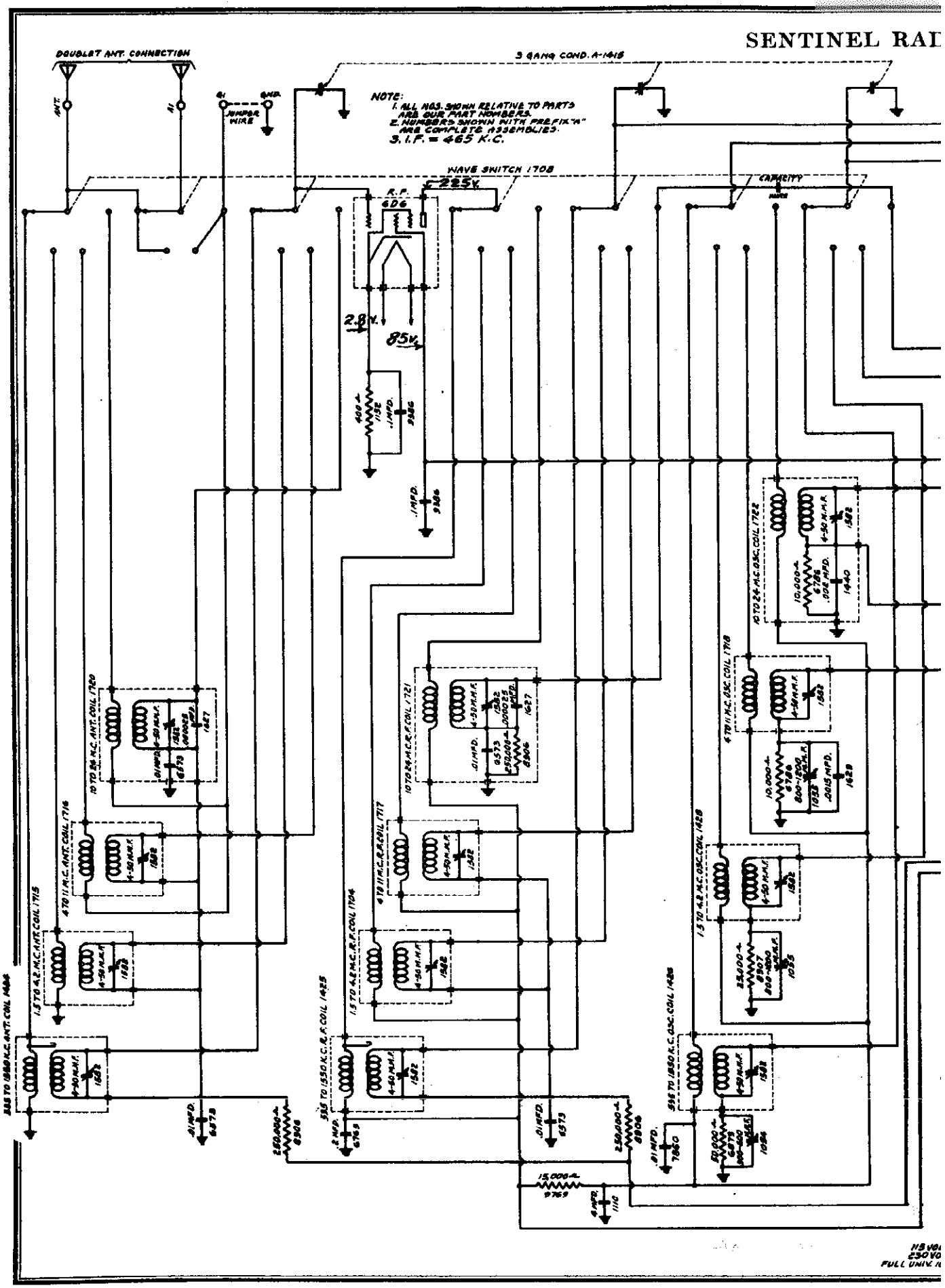

©John F. Rider, Publisher

) CORP.

MODEL 8100B
Schematic
Voltage

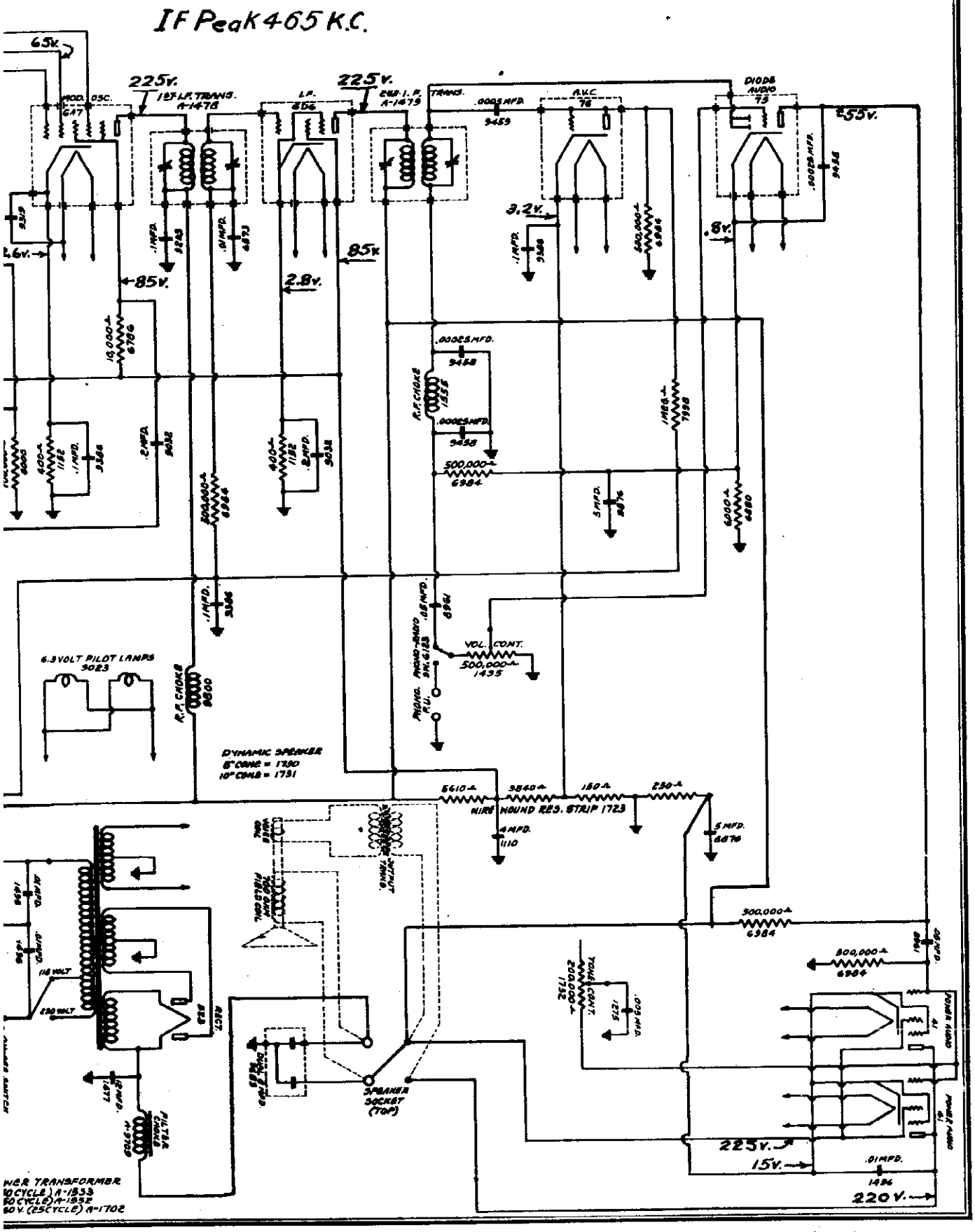

IO CORP.

7

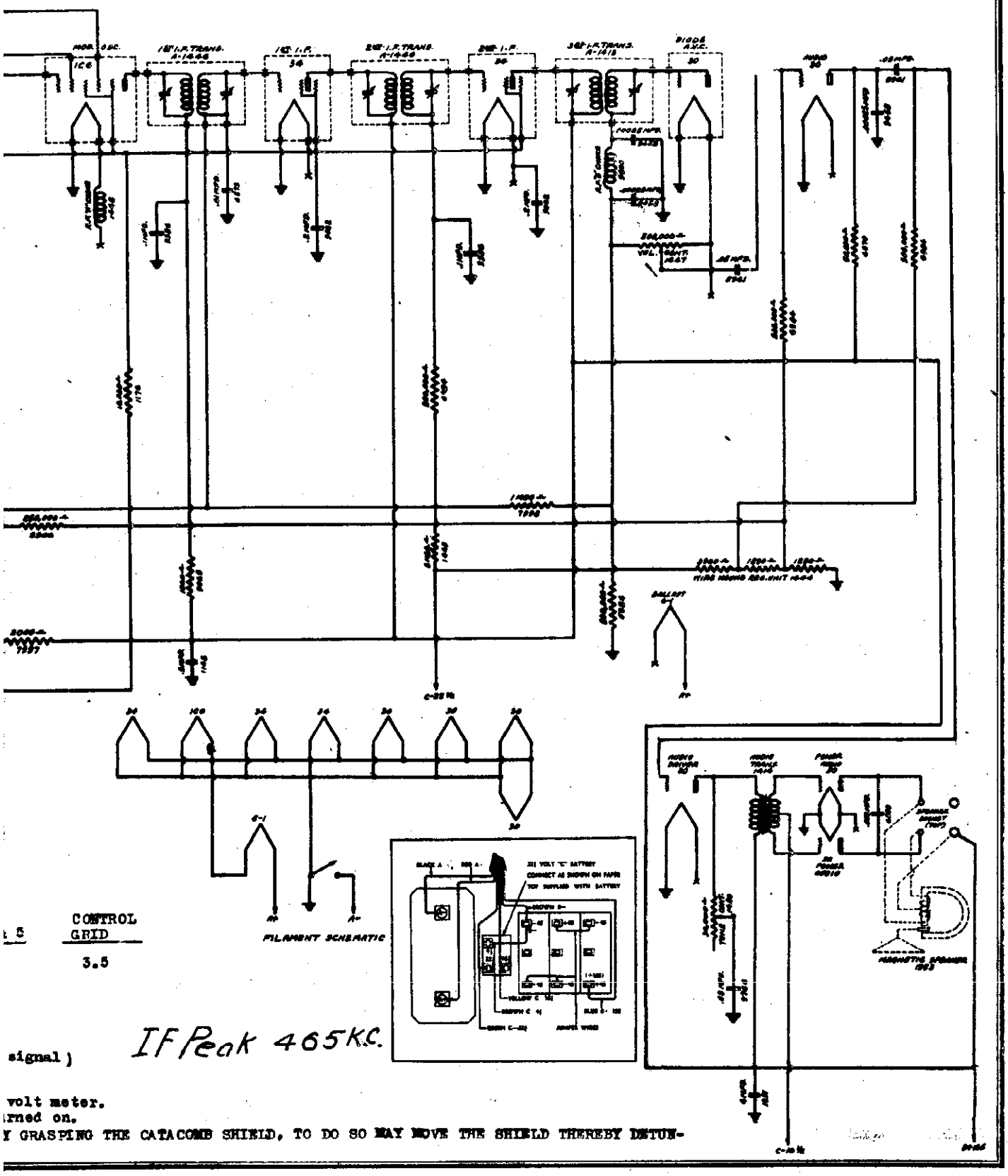

5	CONTROL GRID
	3.5

FILAMENT SCHEMATIC

IF Peak 465KC.

signal)

volt meter.
rned on.
Y GRASPING THE CATACOMB SHIELD, TO DO SO MAY MOVE THE SHIELD THEREBY DETUN-

SENTINEL RADIO CORP.

INTERMEDIATE ALIGNMENT:

1. Connect the high side of the oscillator output to the control grid of the 1C6 tube, leaving the grid cap disconnected. Connect the ground side of the oscillator to the receiver ground post.

2. Set the test oscillator frequency to 465 kilocycles. (This must be accurate).

3. Align the first intermediate transformer by turning one of the trimmer screws up and down (increasing and decreasing capacity) until maximum reading is obtained on the output meter, after which adjust the other trimmer screw of the same transformer for maximum sensitivity.

4. Adjust the other intermediate transformers in the same manner.

TO ALIGN THE VARIABLE CONDENSER:

Adjustment of the trimmer condensers, located inside of and accessible through the holes found in the top of the catacomb (mounted on top and in the left hand front corner of the receiver) will be referred to by numbers as indicated on the circuit diagram showing the relative location of these trimmers.

1. Connect the high output side of the oscillator through a 250 mmfd. (.00025 Mfd.) to the receiver antenna post and the ground to the ground post.

2. Place the band selector switch for operation on the 1520 to 535 kilocycle band (broadcast), tune the receiver to exactly 1400 kilocycles on the dial and set the test oscillator frequency to exactly 1400 kilocycles. THEN BRING IN THE 1400 KILOCYCLE SIGNAL TO MAXIMUM OUTPUT BY ADJUSTING TRIMMER MARKED No. 2 ON CATACOMB DIAGRAM, after which adjust No. 1 and No. 3 trimmers in the order named for maximum sensitivity.

3. Leave the band selector switch for operation on the broadcast band (1520-535 kilocycles) and tune the receiver and set the test oscillator to approximately 600 kilocycles. Then while rocking the condenser slightly to the right and left adjust the 600 kilocycle padding condenser No. 11, which is located on and accessible through the hole provided on the left hand side of the chassis, for maximum sensitivity.

4. Recheck the alignment at 1400 kilocycles as the 600 kilocycle adjustment may have changed the alignment at 1400 kilocycles.

5. Place the band selector switch for operation on the 1.5 to 4.2 megacycle band and set the test oscillator frequency and tune the receiver dial to EXACTLY 3.8 MEGACYCLES. THEN TUNE IN THIS 3.8 MEGACYCLE SIGNAL TO MAXIMUM OUTPUT BY ADJUSTING CATACOMB TRIMMER NO. 7. Next adjust catacomb trimmer No. 4 for maximum sensitivity.

6. With the band selector switch in the same position (1.5-4.2 megacycle band) tune the receiver dial and set the oscillator frequency to approximately 1600 kilocycles, and then while rocking the variable condenser slightly to the right and left adjust the 1600 kilocycle trimmer No. 12 located on the left hand side of the chassis for maximum sensitivity.

7. Recheck 3.8 megacycle adjustments.

8. Adjust the band selector switch for operation on the 4 to 11 megacycle band and tune the receiver dial and set the oscillator frequency to exactly 10.5 megacycles. When adjusting catacomb trimmer No. 5 two peaks (the fundamental and the image peak) will be noticed. CARE MUST BE TAKEN SO THAT THE FUNDAMENTAL PEAK AND NOT THE IMAGE PEAK IS USED FOR ALIGNING THE RECEIVER AT 10.5 MEGACYCLES. First back off catacomb trimmer No. 5 to minimum capacity, next screw down the trimmer (add capacity) until the first peak which is the fundamental and the one you are to use is tuned in. If the trimmer is screwed down beyond the point where this first peak is received the incorrect image peak will be tuned in. When the first peak has been located adjust catacomb trimmer No. 5 to BRING IN THE 10.5 MEGACYCLE SIGNAL TO MAXIMUM OUTPUT After completing this adjustment always check to see if the proper peak has been used. To do this leave the test oscillator frequency at 10.5 megacycles, increase its output, and tune the receiver dial to approximately 9.5 megacycles. Vary the receiver dial slightly to the right and left of 9.5 megacycles and if the fundamental peak was used in aligning at 10.5 megacycles the test oscillator signal will be heard at approximately 9.5 megacycles on set dial. If it is not possible to receive the signal then the fundamental peak was not used and the 10.5 megacycle adjustment of trimmer No. 5 must be gone over and properly adjusted. After correctly completing catacomb trimmer No. 5 adjustment adjust catacomb trimmer No. 6 for maximum sensitivity. Should two peaks be noticed with this trimmer always adjust trimmer No. 6 to the one that requires the most capacity.

9. With the band selector switch adjusted for operation on the same band (4-11 megacycles) set the test oscillator frequency and tune the receiver dial to approximately 4.8 megacycles. Then while rocking the variable condenser slightly to the right and left adjust the 4.8 megacycle trimmer No. 10, located on the left hand side of the chassis for maximum sensitivity.

10. Recheck the 10.5 megacycle adjustment.

11. Adjust the band selector switch for operation on the 10 to 20 megacycle band, tune the receiver dial and set the oscillator frequency to exactly 19 megacycles. When adjusting catacomb trimmer No. 8 two peaks (the fundamental and the image peak) will be noticed. CARE MUST BE TAKEN SO THAT THE FUNDAMENTAL PEAK AND NOT THE IMAGE PEAK IS USED FOR ALIGNING THE RECEIVER AT 19 MEGACYCLES. First back off catacomb trimmer No. 8 to minimum capacity, next screw down the trimmer (add capacity) until the first peak which is the fundamental and the one you are to use is tuned in. If the trimmer is screwed down beyond the point where this first peak is received the incorrect image peak will be tuned in. When the first peak has been located adjust catacomb trimmer No. 8 to BRING IN THE 19 MEGACYCLE SIGNAL TO MAXIMUM OUTPUT. After completing this adjustment always check to see if the proper peak has been used. To do this leave the test oscillator frequency at 19 megacycles, increase its output, and tune the receiver dial to approximately 18 megacycles. Vary the receiver dial slightly to the right and left of 18 megacycles and if the fundamental peak was used in aligning at 19 megacycles the test oscillator signal will be heard at approximately 18 megacycles on set dial. If it is not possible to receive the signal then the fundamental peak was used and the 19 megacycle adjustment of trimmer No. 8 must be gone over and properly adjusted. After correctly completing catacomb trimmer No. 8 adjustment adjust catacomb trimmer No. 9 for maximum sensitivity. Should two peaks be noticed with this trimmer always adjust trimmer No. 9 to the one that requires the most capacity.

12. Some code and aircraft signals are broadcast on a frequency exactly the same or near the IF frequency of the receiver. To eliminate interference from these signals a 465 kilocycle filter (mounted in the coil shield located underneath and towards the front of the chassis) is incorporated in the set. To adjust, set the oscillator frequency (with oscillator output connected to set antenna and ground) TO EXACTLY 465 KILOCYCLES, turn the receiver on and adjust the trimmer located on and accessible through the top of the filter shield for MINIMUM 465 KILOCYCLE SIGNAL.

MODEL 116
Schematic
Socket, Alignment

SENTINEL RADIO CORP.

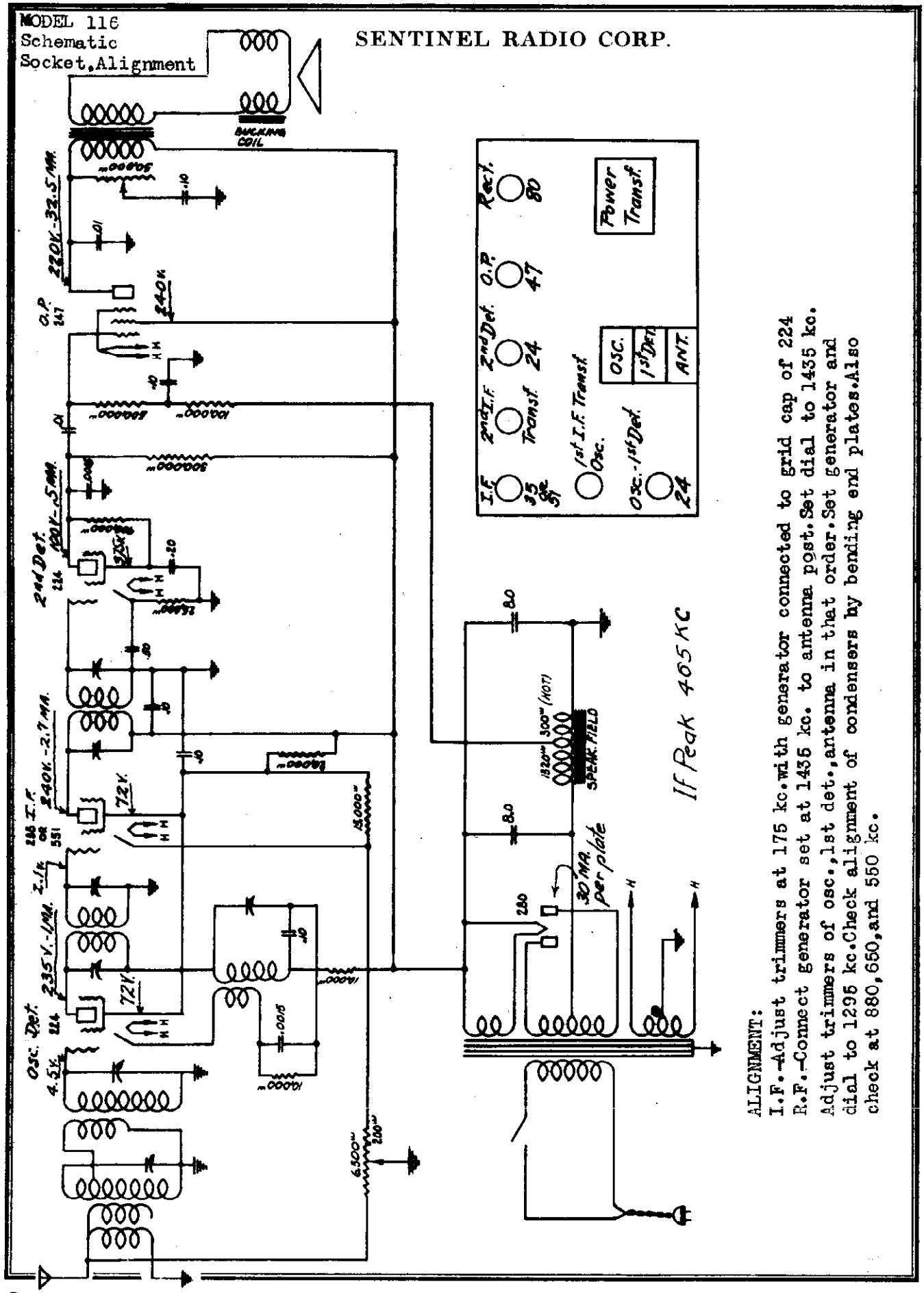

ALIGNMENT:
I.F.—Adjust trimmers at 175 kc. with generator connected to grid cap of 224
R.F.—Connect generator set at 1435 kc. to antenna post. Set dial to 1435 kc.
Adjust trimmers of osc., 1st det., antenna in that order. Set generator and
dial to 1295 kc. Check alignment of condensers by bending end plates. Also
check at 880, 660, and 550 kc.

©John F. Rider, Publisher

SHELLEY RADIO CO.

MODEL 5 Kompak
Schematic
MODEL 48
Schematic, Socket

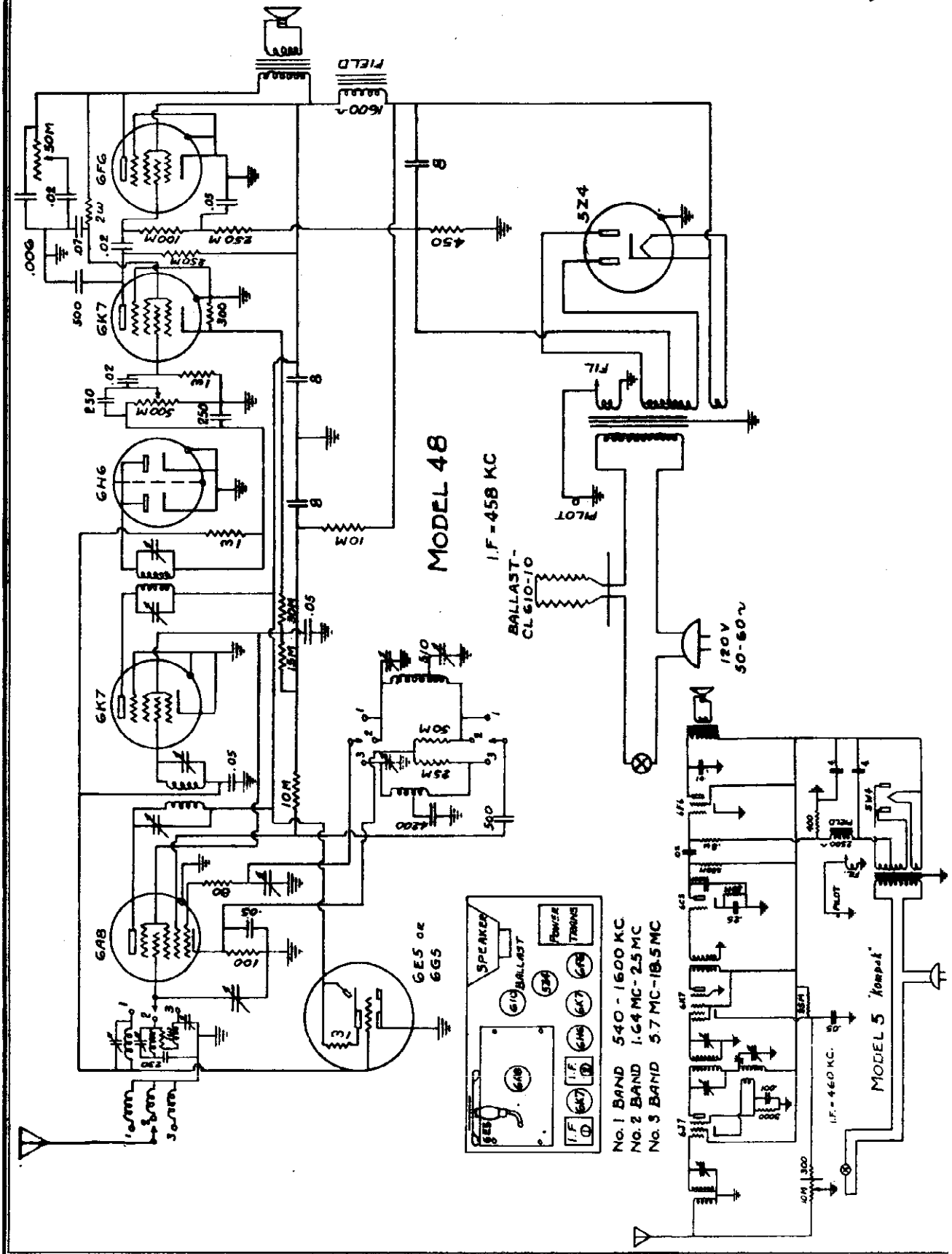

©John F. Rider, Publisher

MODEL 65
MODEL 67
Schematics
Socket

SHELLEY RADIO CO.

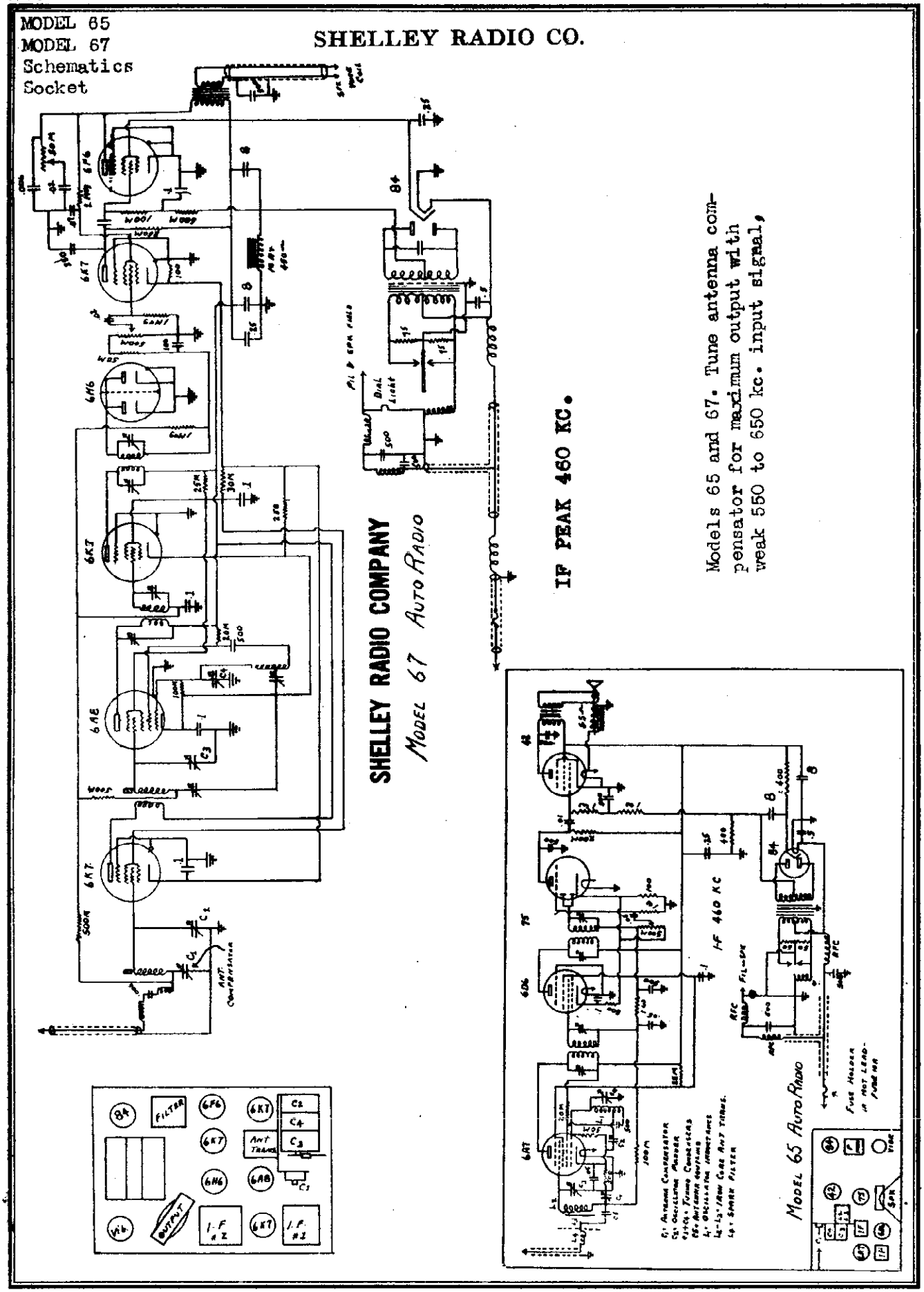
SHELLEY RADIO COMPANY
MODEL 67 AUTO RADIO
IF PEAK 460 KC.
Models 65 and 67. Tune antenna compensator for maximum output with weak 550 to 650 kc. input signal.
MODEL 65 AUTO RADIO
IF 460 KC
6K8
6F6
6K7
6H6
6A8
6K7
6K7
6K8
6A8
6A7
6K7
6K7
6K7
6K8
6A8
6A7
6K7
6K7
6K7
6K8
6A8
6A7
6K7

MODELS D,DE
MODEL KL
MODEL OP

SIMPLEX RADIO CO.

MODEL RK,RKE,RKS
MODELS Z,ZE
Schematics,Voltage

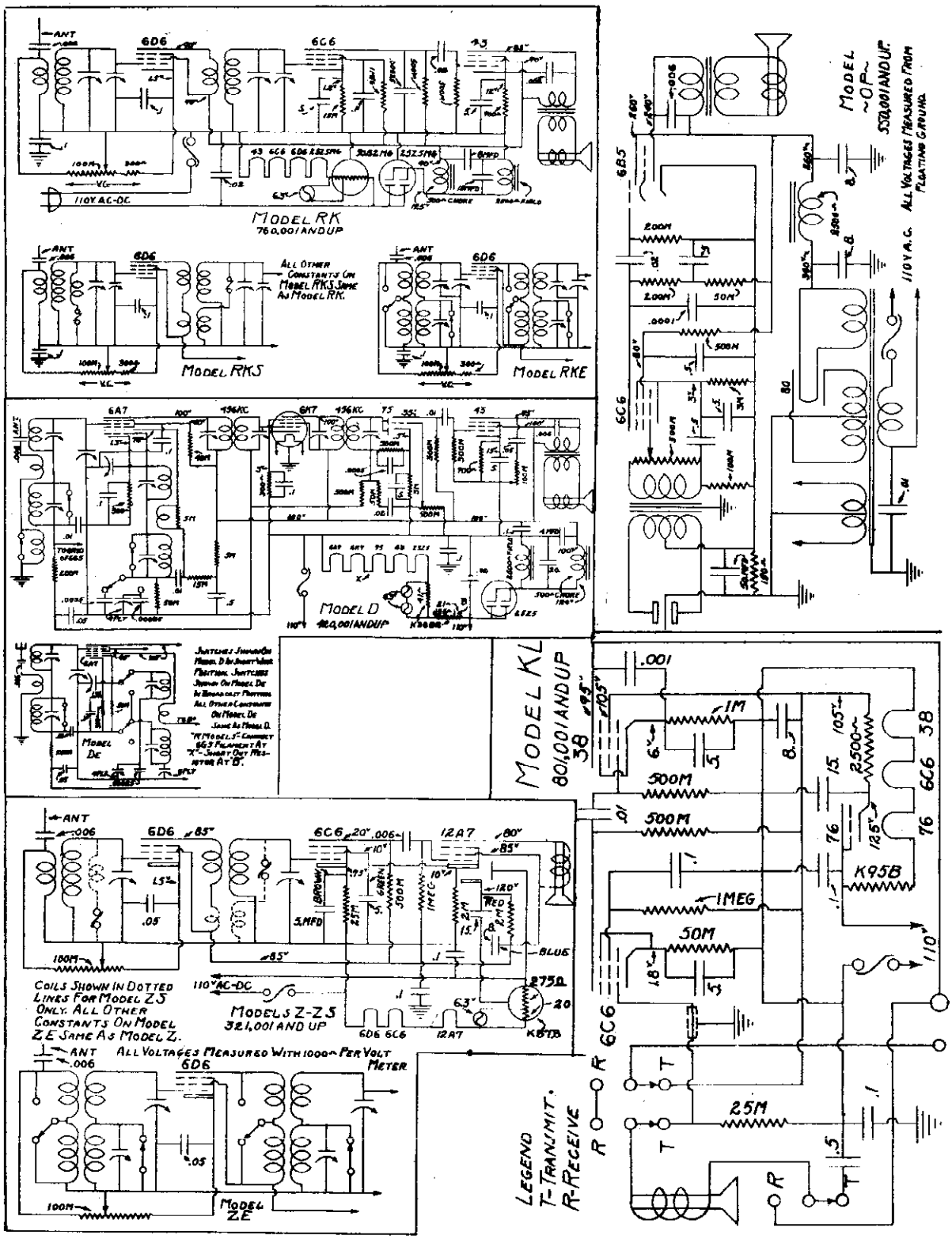

©John F. Rider, Publisher

MODEL AA
MODELS G,GE
MODELS GB,GBE

SIMPLEX RADIO CO.

MODELS GH,GHE
MODEL Q
Schematics,Voltage

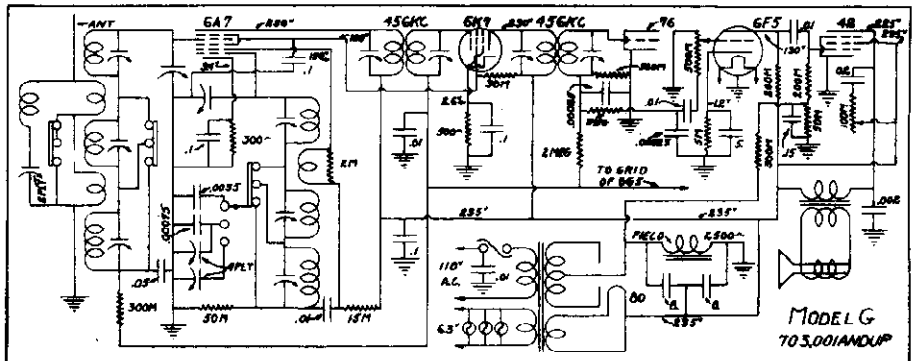

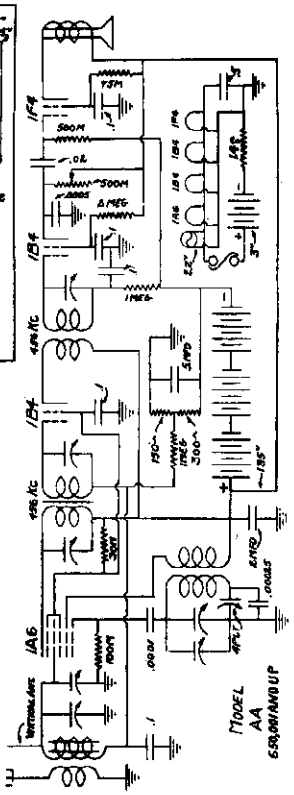

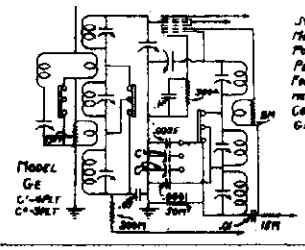

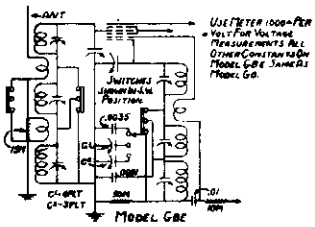

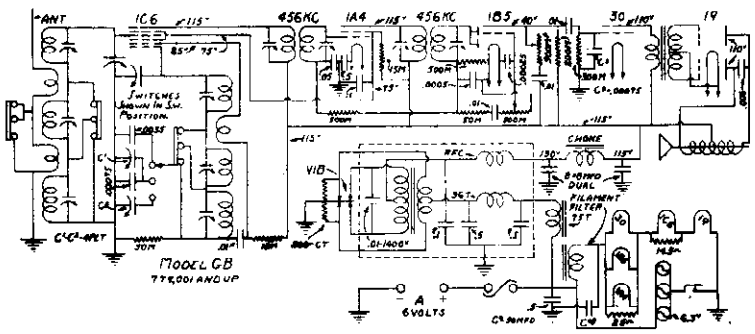

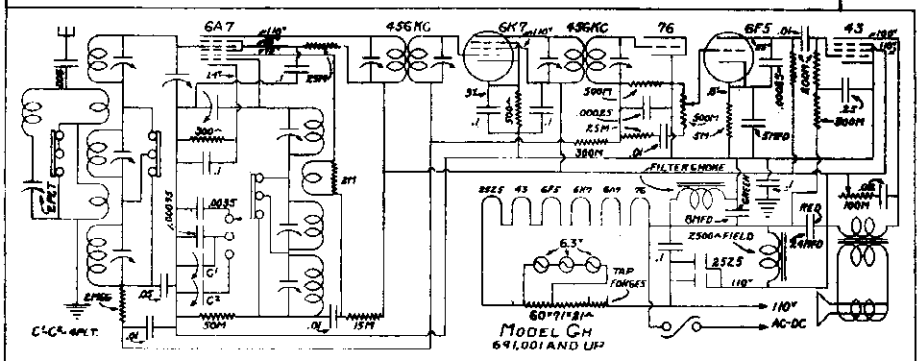

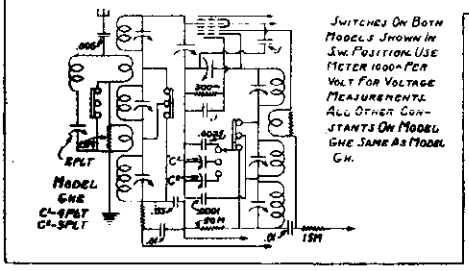

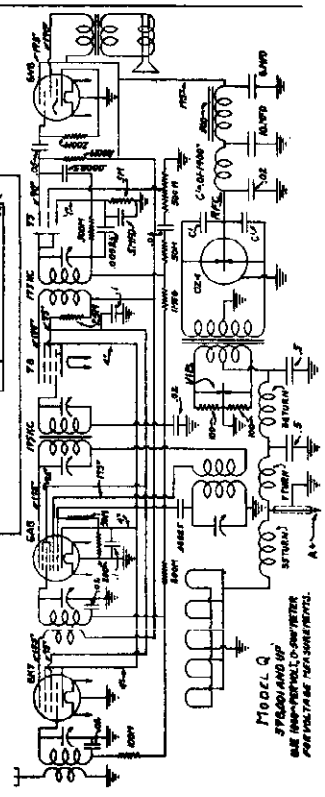

©John F. Rider, Publisher

©John F. Rider, Publisher

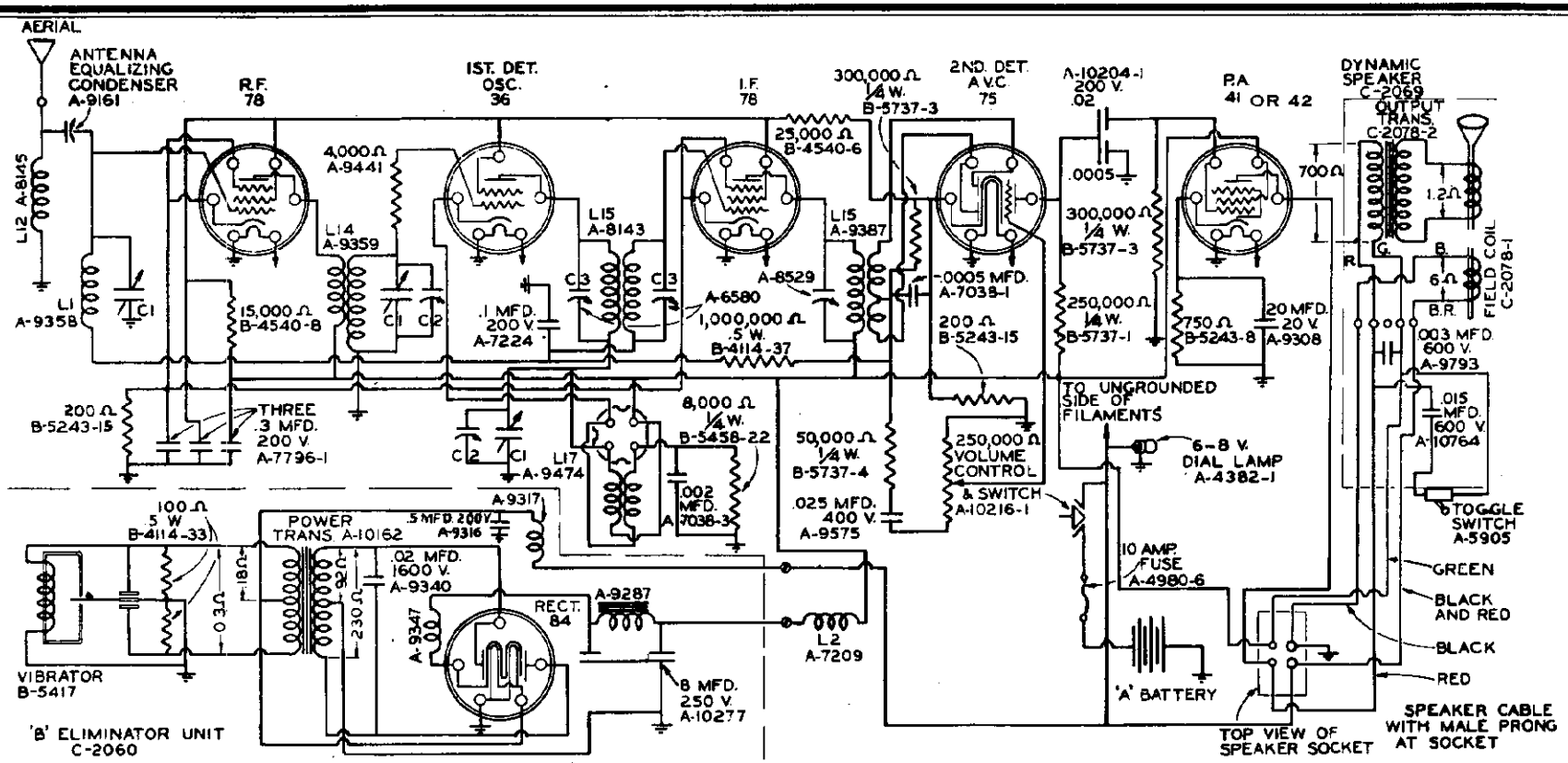

VOLTAGE ANALYSIS AND CONTINUITY CHART

C1 VARIABLE CONDENSER
C2 EQUALIZING CONDENSER
C3 ADJUSTING CONDENSER

L1 TUNING COIL
L2 CATHODE CHOKE COIL
L12 ANTENNA CHOKE COIL

L14 R.F. TRANSFORMER
L15 I.F. TRANSFORMER
L17 OSCILLATOR COIL

I.F. PEAK - 172.5 K.C.

Condition of "A" Battery—Good

Position of Volume Control—Full with Antenna Disconnected

Tube	Location	PLATE Volts	PLATE Ma.	Screen Grid Volts	Control Grid Volts	Grid Res. to Preced. Plate (Ohms)	RESISTANCE TO GROUND Plate	Screen	C. Grid	Cathode
78	R-F Stage	200	6.	100	—2.5	—	40,000	25,000	1,300,000	200
36	1st Det.-Osc.	200	1.5	100	—12.	44,000	40,000	25,000	4,000	8,000
78	I-F Stage	200	6.	100	—2.5	1,340,000	40,000	25,000	1,300,000	200
75	Diode Det.-AVC	0	0	—	—	—	300,000	—	—	200
	A-F Triode	200	1.	—	—1.2	290,000	290,000	—	250,000	
41*	Power Stage	185	18.	200	—16.0	590,000	40,000	40,000	300,000	750
84	Rectifier	250	25.	—	—	—	92	—	—	40,000

NOTES: Allow 15% + or — on all measurements. All heater voltages: 6.3. "A" battery drain: 6.0 amperes.
* Chassis may be equipped with Type 41 or Type 42 tube.

MODELS 33A,33B
MODEL 36
MODELS 71,71B

SPARKS WITHINGTON CO.

MODELS 72
Trimmers,Alignment

A. ALIGNMENT OF THE I.F. EQUALIZING CONDENSERS.

1. Connect the aerial terminal of the oscillator to the control grid terminal (terminal on top of tube) of the first detector-oscillator tube, and the ground terminal to the ground connection of the receiver, and set oscillator for 172.5 kilocycles. (MODELS 71, 71-B - 456 K.C.)

2. Turn the volume control on full.

3. Turn the attenuator or volume control on the oscillator to the position where the oscillator is heard faintly. If the oscillator is not heard at all, even with the control full on, the condensers of the stage requiring adjustment should be manipulated until it is heard at the loudest. The control should then be reduced so that only a faint sound from the oscillator is audible.

4. All intermediate frequency adjustable condensers should be adjusted if the adjustment of one is necessary. When adjustment of the stage that requires such has been made, the other stages should be adjusted in rotation. Each pair of condensers should be adjusted before proceeding to the next.

5. Correct alignment is obtained when reduction of the oscillator output and readjustment of the condensers is continued until maximum deflection of the output meter is obtained with a minimum of oscillator input. The numerical value of the deflection on the output meter scale is of no consequence, for the object is to set the output of the oscillator at a certain value and adjust the condenser until maximum deflection is obtained. If the meter goes off scale or does not give a large enough reading, adjust the oscillator accordingly.

6. It may be necessary to repeat the entire adjustment once or twice, to be sure the adjustments are correct.

B. ALIGNMENT OF THE R.F. AND OSCILLATOR EQUALIZING CONDENSERS.

1. Connect the oscillator to the antenna and ground connections of the receiver, tune the oscillator to a frequency between 1400 and 1500 kilocycles.

NOTE - ON MODEL 72-PQ (POLICE SET) TUNE OSCILLATOR TO THE DESIRED FREQUENCY AND TURN DIAL UNTIL SIGNAL IS HEARD.

2. Turn condenser gang until this signal is heard.

3. Adjust oscillator and R.F. trimmers for maximum output.

C. ALIGNMENT OF ANTENNA EQUALIZING CONDENSER.

The antenna equalizing condenser should always be adjusted when the receiver is installed and with the regular aerial and ground connected. It is the purpose of this condenser to resonate the first tuned circuit with the antenna system to which the receiver is connected, thereby providing a maximum transfer of energy. The procedure of adjustment is as follows:

1. Tune in a weak distant station or oscillator signal between 1300 and 1400 kilocycles, turn the volume control on full.

2. Turn the hex nut on the condenser or the screw in the condenser with an insulated handle screw driver to the position where the volume from the station "tuned-in" or the oscillator signal is the loudest. Once made, this adjustment need not be changed unless the antenna system is altered, the receiver is moved from one location to another, or the other condensers are re-adjusted.

NOTE: When antenna equalizing condenser is adjusted on oscillator signal, adjustment will not hold true when receiver is connected to aerial; this condenser must be aligned to antenna system.

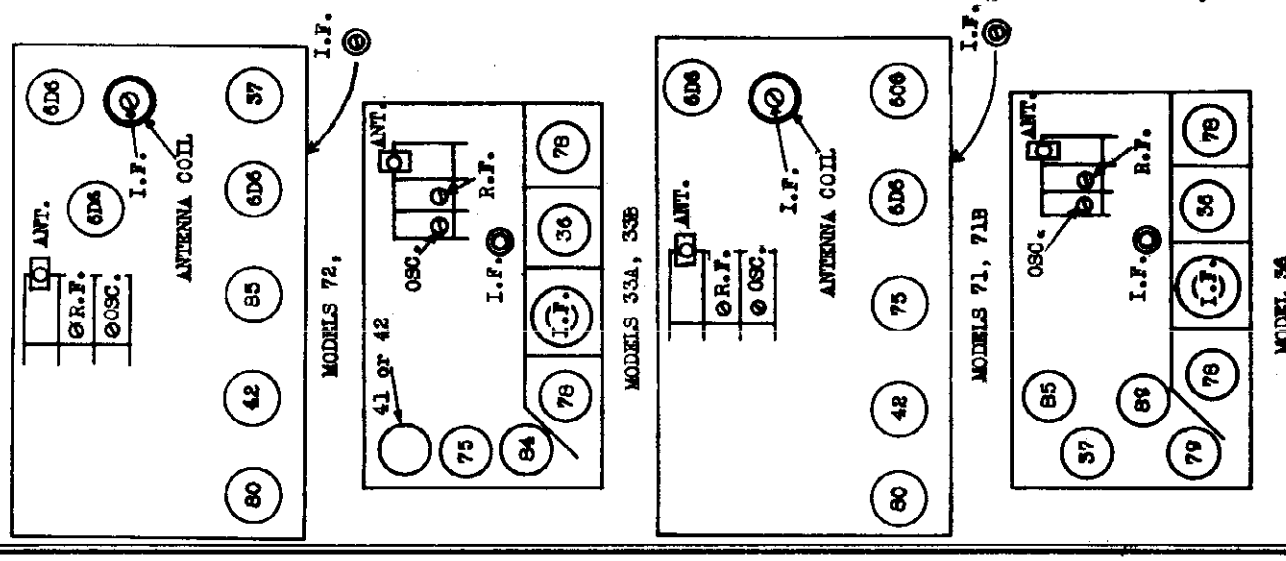

©John F. Rider, Publisher

SPARKS WITHINGTON CO.

MODELS 40,40A
MODELS 41,41A,42,43
MODEL 55
Alignment,Trimmers

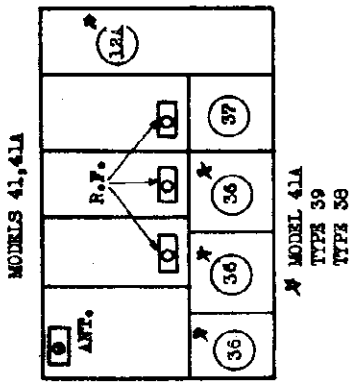

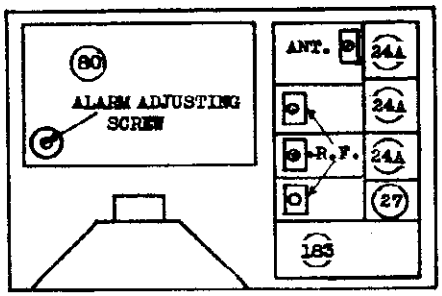

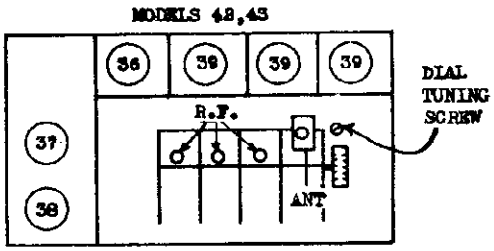

ALIGNMENT INSTRUCTIONS

MODELS 40,40A

1. Turn condenser gang to a dial setting between 1200 and 1400 kilocycles and turn volume control to full on position.

2. Connect oscillator to antenna terminal and adjust oscillator so that signal is heard at maximum volume.

3. Adjust R.F. trimmers for maximum signal response.

4. With the set installed and with antenna connected tune in a weak station between 1200 and 1400 kilocycles with volume control on full position.

5. Adjust antenna trimmer for maximum signal response.

MODEL 55

The procedure of adjustment is as follows: When a broadcast is being received, retard the volume control to a point where the signal is just audible and then adjust the R.F. and antenna equalizing condensers for maximum signal response. This adjustment should always be made when the Radio Receiving Set is installed and once made the adjustment should not be changed, unless the antenna system is altered, or the receiving set moved from one location to another.

ALARM CIRCUIT RELAY CONTROL

With the receiving set in operation and a broadcast being received, the Alarm Circuit should be adjusted so it will indicate when a broadcast is to be made. This adjustment is made by turning the slotted shaft visible through the small opening in the forward left hand corner of the power converter unit, to a position where static and interference will not operate the alarm, but the broadcast signal will give the proper indication.

If the Interference is particularly bad, the bell may be replaced by a .45 ampere 2.5, or six volt miniature lamp. This will eliminate any annoyance caused by tinkling of the bell.

While the light may glow at intervals from static impulses, the actual broadcast will be indicated by a steady illumination. When the signal-switch control knob is turned to the signal position the volume control is autometically disconnected, thus regardless of the position of the Volume Control, the alarm is always ready to operate at maximum volume.

MODELS 41,41A,42,43

With the cover on the receiving unit turn the dial with a screw driver by means of the slotted shaft, to the frequency of the station to be received. Retard the volume control to a point where the station is just audible, then carefully retune the dial to the point where the station is heard the loudest. Again retard the volume control to a point where the station is just audible, then using a small wooden or insulated handle screw driver, turn the screw in the antenna compensating condenser to the right or the left until the maximum amount of volume has been obtained. Then again retard the volume control and with a hex-socket insulated adjusting wrench, adjust each R.F. equalizing condenser to a point where the volume from the station is the loudest.

This adjustment should always be made when the receiver is installed, and should not be changed unless the antenna system is altered, the receiver is moved from one location to another, or a different station is "tuned in". In each case the adjustment must then be repeated.

A more accurate adjustment of the compensating and equalizing condensers can be made by using a voltmeter as an indicator.

To do this proceed as follows:

Connect a 1,000 ohm per volt, 0-50 scale D.C. voltmeter from the cathode of the detector tube to the ground (plus of meter to cathode, minus to ground). Correct adjustment of the condenser is then obtained when the indicating needle on the voltmeter deflects to a maximum position.

© John F. Rider Publisher

MODEL 73
Schematic
Trimmers

SPARKS WITHINGTON CO.

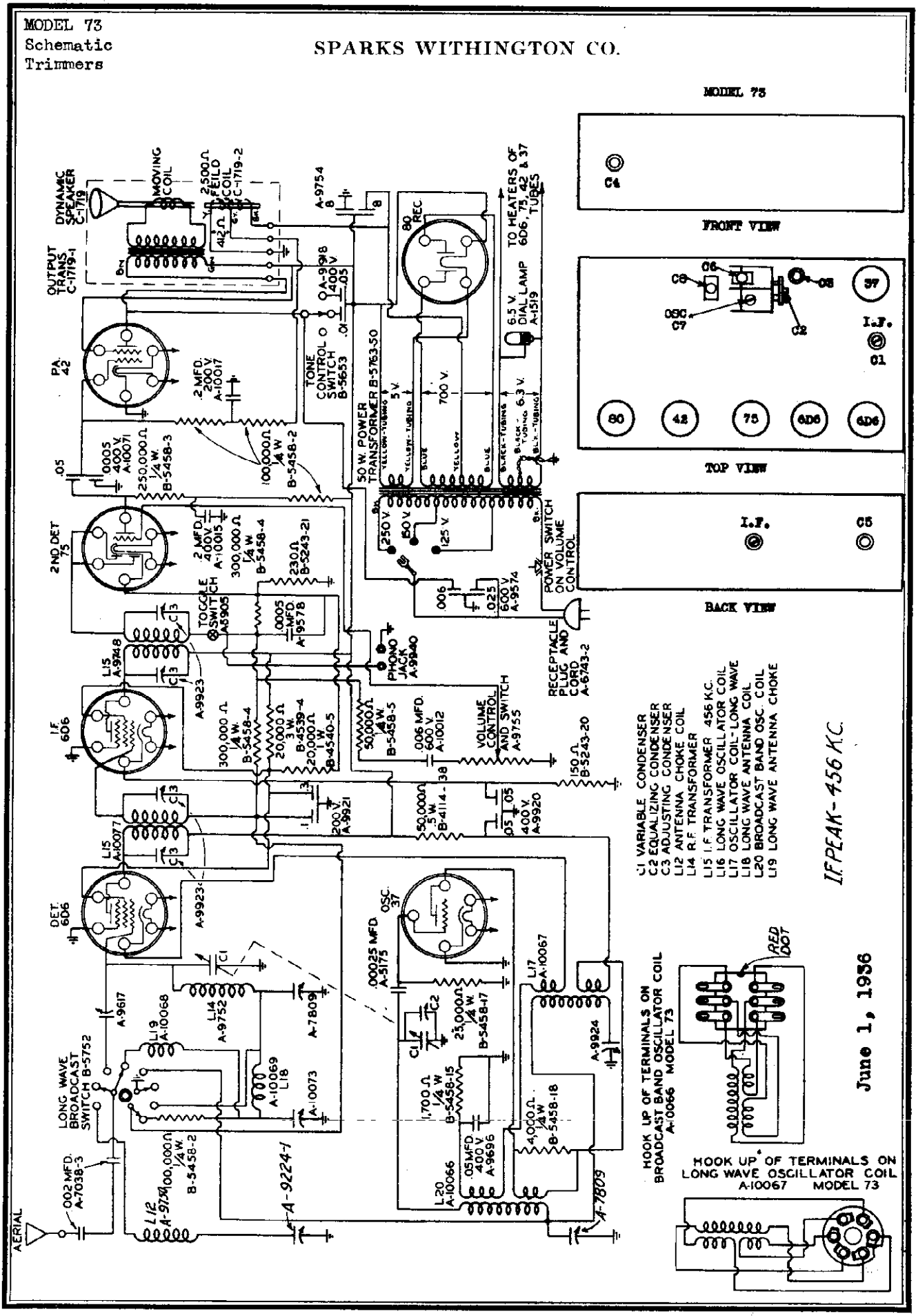

©John F. Rider, Publisher

SPARKS WITHINGTON CO.

MODELS 73AX, 73BX
Schematic
Trimmers, Parts

June 1, 1936

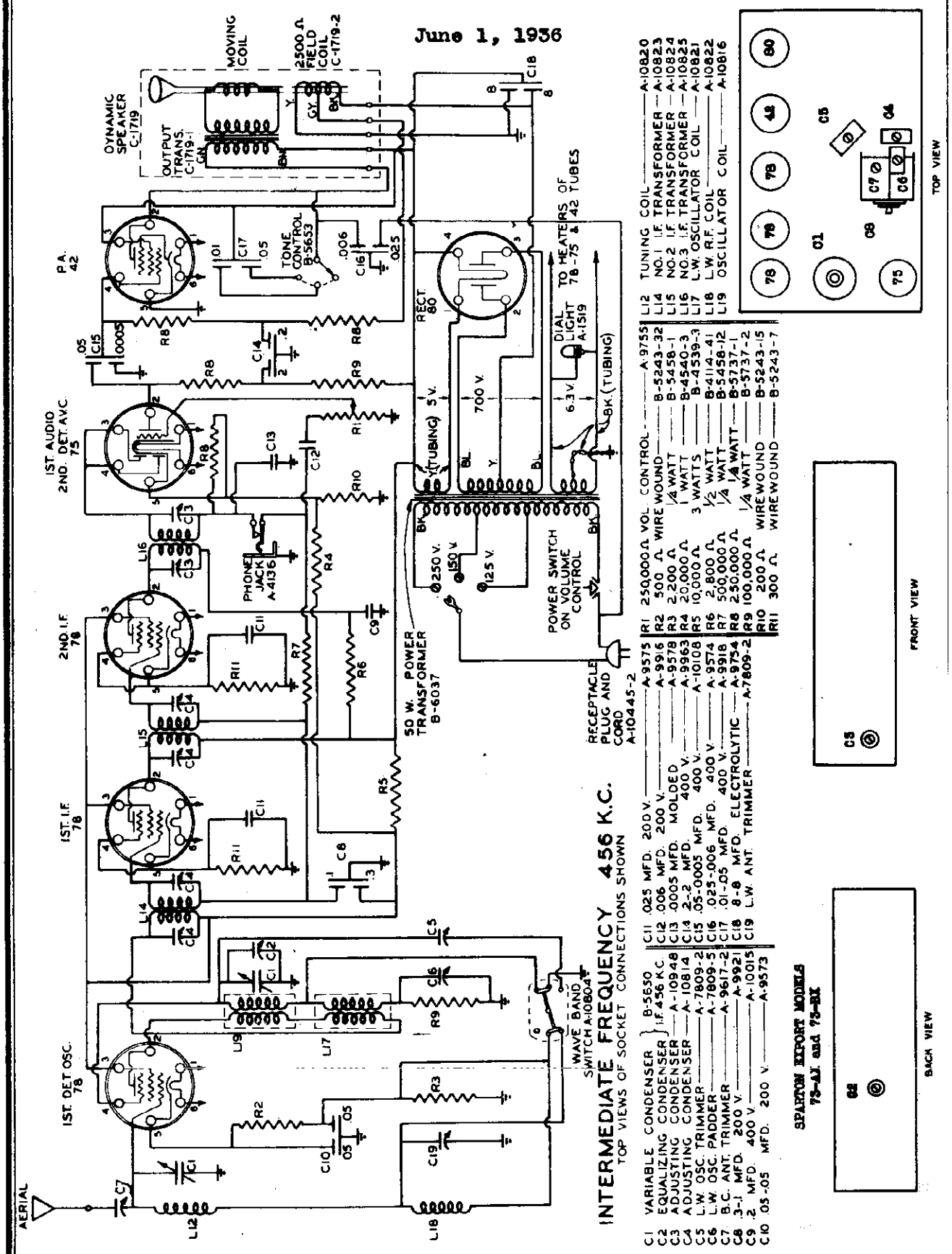

C1 VARIABLE CONDENSER } B-5630
C2 EQUALIZING CONDENSER } I.F. 456 K.C.
C3 ADJUSTING CONDENSER — A-10948
C4 ADJUSTING CONDENSER — A-10814
C5 L.W. OSC. TRIMMER — A-7809-2
C6 L.W. OSC. PADDER — A-7809-5
C7 B.C. ANT. TRIMMER — A-9617-2
C8 .3-1 MFD. 200 V. — A-9921
C9 .2 MFD. 400 V. — A-10015
C10 .05-.05 MFD. 200 V. — A-9573
C11 .025 MFD. 200 V. — A-9575
C12 .006 MFD. 200 V. — A-9916
C13 .0005 MFD. MOLDED — A-9578
C14 2-2 MFD. 400 V. — A-9963
C15 .05-.0005 MFD. 400 V. — A-10108
C16 .025-.006 MFD. 400 V. — A-9574
C17 .01-.05 MFD. 400 V. — A-9918
C18 8-8 MFD. ELECTROLYTIC — A-9754
C19 L.W. ANT. TRIMMER — A-7809-2

R1 250,000 Ω VOL. CONTROL — A-9755
R2 500 Ω WIRE WOUND — B-5243-32
R3 2,200 Ω 1/4 WATT — B-5458-1
R4 20,000 Ω 1 WATT — B-4540-3
R5 10,000 Ω 3 WATTS — B-4539-3
R6 2,800 Ω 1/2 WATT — B-4114-41
R7 500,000 Ω 1/4 WATT — B-5458-12
R8 250,000 Ω 1/4 WATT — B-5737-1
R9 100,000 Ω 1/4 WATT — B-5737-2
R10 200 Ω WIRE WOUND — B-5243-15
R11 300 Ω WIRE WOUND — B-5243-7

L12 TUNING COIL — A-10820
L14 NO. 1 I.F. TRANSFORMER — A-10823
L15 NO. 2 I.F. TRANSFORMER — A-10824
L16 NO. 3 I.F. TRANSFORMER — A-10825
L17 L.W. OSCILLATOR COIL — A-10821
L18 L.W. R.F. COIL — A-10822
L19 OSCILLATOR COIL — A-10816

© John F. Rider, Publisher

SPARTON MODELS 73-AX, 73-BX.

Due to the fact that the ear cannot distinguish small changes in sound intensity, an output meter is essential to the proper adjustment of the various condensers.

Unless otherwise specified, the adjusting of any condenser consists of turning the adjusting screw or nut to the right or left until the output meter registers the greatest deflection.

STEP BY STEP PROCEDURE FOR COMPLETE ALIGNMENT OF MODELS.

NOTE: For proper alignment of these chassis the procedure should be followed in the same order as given.

A. ALIGNMENT OF INTERMEDIATE-FREQUENCY STAGES.

(1) Turn on receiver and test oscillator, and allow both to operate several minutes before attempting to align any condensers.

(2) Connect "antenna" of test oscillator to grid cap of Type 78 first detector-oscillator tube and "ground" of test oscillator to chassis frame of receiver.

(3) Turn the band selector switch to the "broadcast" position and adjust the tone control completely to the left so that the "brilliant" tone is obtained.

(4) Adjust condenser C_4 (see Fig.) so that the adjusting nut is screwed all the way down and then turned back one-quarter turn.

(5) Adjust condenser C_5 so that the nut is turned about one-half way down.

(6) The dial pointer should point to the last line on the scale past 550 meters when the variable condenser rotor plates are completely meshed with the stator plates. If the dial pointer reads incorrectly it may be reset by first loosening the set-screws on the hub of the dial scale, holding the rotor plates fully in mesh and moving the dial scale until the last line on the scale past 550 meters is opposite the pointer on the escutcheon.

(7) Turn the condenser rotor plates all the way out and with the test oscillator adjusted for generating a signal of 468 kilocycles (657.8 meters) adjust condensers C_1, C_2, and C_3.

B. ALIGNMENT OF BROADCAST BAND AND LONG-WAVE BAND.

(1) Disconnect "antenna" lead of test oscillator from grid cap of first detector-oscillator tube and connect to the antenna terminal of the chassis.

(2) Tune the test oscillator and receiver to a wave-length of 200 meters (1500 kilocycles) and adjust condensers C_6 and C_7.

CAUTION: Extreme care should be taken in the preceding step so that the condensers are not adjusted to any other signal except the 200 meter wave-length of the signal generator or test oscillator.

(3) Turn the band selector switch to the "long-wave" position.

(4) Tune the test oscillator and receiver to 1,000 meters (300 kilocycles) and adjust condenser C_8.

(5) Adjust condenser C_8 (mounted on the side of the variable condensers) for maximum deflection of the output meter with the test oscillator adjusted for 1,000 meters.

(6) Tune the test oscillator and receiver to 1740 meters (172.5 kilocycles) and adjust condenser C_5 for maximum deflection of the output meter regardless of the dial setting.

(7) Repeat steps 5 and 6 until the adjustment of condenser C_5 does not affect the adjustment made in Step 5 (1,000 meters).

(8) Tune test oscillator and receiver for a wave length of 2,000 meters (150 kilocycles) and check for operation of the receiver.

(9) Turn band selector switch back to "broadcast" position and tune test oscillator and receiver to 500 meters (600 kilocycles) and readjust condenser C_4 for maximum deflection of the output meter.

(10) Tune test oscillator and receiver to 200 meters (1500 kilocycles) and check for calibration and operation of the receiver. Repeat this procedure at 555 meters (900 kilocycles) and 500 meters (600 kilocycles).

NOTE: Slight readjustments of the condenser C_8 will be required after the receiver is connected to the antenna with which it is to be used. This condenser should be adjusted by tuning in a weak distant station between 200 and 250 meters, and adjusting the condenser to a point of maximum volume. Once adjusted, it need not be changed unless the antenna system is altered. This adjustment ideally matches the receiver to operate on any antenna.

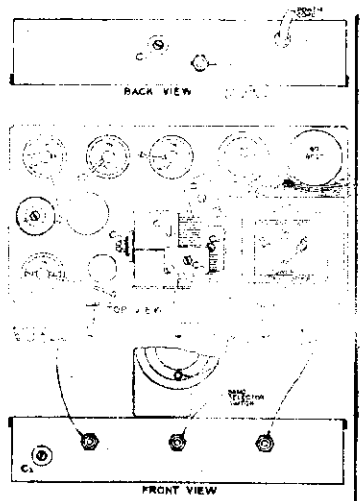

VOLTAGE-RESISTANCE CHART

Line Voltage — 117 Volts
Voltage Tap — 125 Volts

Position of Volume Control — Full with Antenna Disconnected
Position of Band Selector Switch — Broadcast

Tube	Function	Measurement	Voltage and Resistance at Each Socket Prong to Ground (See Prong Numbers on Schematic Diagram) Prong No. 1	Prong No. 2	Prong No. 3	Prong No. 4	Prong No. 5	Prong No. 6	Grid Cap
78	1st Detector-Oscillator	Volts	2.7	320	105	6.2	6.2	2.7	0
		Ohms	0	20,000	20,000	0	3,000	0	2,000
78	1st I-F Amplifier	Volts	2.7	160	105	0	18	2.7	18
		Ohms	0	20,000	20,000	300	300	0	720,000
78	2nd I-F Amplifier	Volts	2.7	240	105	1.8	2.8	2.7	0
		Ohms	0	20,000	20,000	300	300	0	720,000
75	2nd Det.-A. V. C.	Volts	2.7	55	*	*	1	2.7	0
		Ohms	0	500,000	254,000	250,000	250	0	360,000
42	Power Amplifier	Volts	1.7	215	240	*	0	2.7	—
		Ohms	0	24,000	25,000	500,000	0	0	—
80	Rectifier	Volts	260	330	300	260	—	—	—
		Ohms	2,000	2,500	2,500	2,500	—	—	—

NOTES: Voltage and resistance readings are for schematic diagram scale which will give greatest deflection shown. Allow 15% + or — on all readings within scale limits. All measurements. Always use meter merits made with Weston Selective Analyzer No. 665, Type 1.
*Cannot be measured with Weston No. 665, Type 1.

(c) Tune the test oscillator and receiver to 1740 meters (172.5 kilocycles) and adjust condenser C_5 for maximum deflection of the output meter regardless of the dial setting.

(7) Repeat steps 5 and 6 until the adjustment of condenser C_5 does not affect the adjustment made in Step 5 (1,000 meters).

(8) Tune test oscillator and receiver for a wave length of 2,000 meters (150 kilocycles) and check for operation of the receiver.

(9) Turn band selector switch back to "broadcast" position and tune test oscillator and receiver to 500 meters (600 kilocycles) and readjust condenser C_4 for maximum deflection of the output meter.

(10) Tune test oscillator and receiver to 200 meters (1500 kilocycles) and check for calibration and operation of the receiver. Repeat this procedure at 555 meters (900 kilocycles) and 500 meters (600 kilocycles).

NOTE: Slight readjustments of the condenser C_8 will be required after the receiver is connected to the antenna with which it is to be used. This condenser should be adjusted by tuning in a weak distant station between 200 and 250 meters, and adjusting the condenser to a point of maximum volume. Once adjusted, it need not be changed unless the antenna system is altered. This adjustment ideally matches the receiver to operate on any antenna.

SPARTON MODEL 73

One use of quality test equipment is highly recommended, and a good test oscillator becomes a virtual necessity when aligning the all-wave or short-wave type of receiver. Due to the fact that the ear cannot distinguish small changes in sound intensity, an output meter is essential to the proper adjustment of the various condensers.

Unless otherwise specified, the adjusting of any condenser consists of turning the adjusting screw or nut to the right or left until the output meter registers the greatest deflection.

1. EQUIPMENT REQUIRED.

A. Modulated test oscillator (crystal controlled or accurately calibrated) capable of generating signals with wave lengths from 200 to 2000 meters (100 to 1500 kilocycles).

NOTE: The above range is approximately that of the SPARTON Export Model 75. A good test oscillator or miniature signal generator is capable of generating signals from 12 to 3000 meters (100 to 25,000 kilocycles).

B. Output meter.

C. Sparton Part A-8737 and A-9851 adjusting wrenches.

2. STEP BY STEP PROCEDURE FOR COMPLETE ALIGNMENT OF MODELS.

IMPORTANT: An outdoor antenna fifty feet in length including lead-in and twenty-five to fifty feet in height will give good results. A longer aerial may be used to some advantage if not in the locality of a powerful local station. The yellow wire is the antenna terminal, and should be connected to the antenna lead-in wire. The joint should be taped so as to prevent grounding to the chassis body. Should an aerial of fifty feet or longer be used, the red and black lead adjacent to the antenna lead should be tied to the black or ground lead. With a short aerial, this red and black lead may be neglected. To determine the necessity of it, tune in some distant station about 600 meters in wave length and see if the connecting of this lead to ground improves the signal strength.

NOTE: For proper alignment of this chassis the procedure should be followed in the same order as given.

A. ALIGNMENT OF INTERMEDIATE-FREQUENCY STAGES.

(1) Turn on receiver and test oscillator, and allow both to operate several minutes before attempting to align any condensers.

(2) Connect "antenna" of test oscillator to grid cap of Type 6D6 first detector tube and "ground" of test oscillator to chassis frame of receiver.

NOTE: It is advisable to read carefully the operating instructions included with the test oscillator.

(3) Turn the band selector switch to the "broadcast" position and adjust the tone control completely to the left so that the "brilliant" tone is obtained. Connect the black lead and the black and red tracer lead to chassis.

(4) Adjust condenser C_4 so that the adjusting nut is screwed all the way down and then turned back one-quarter turn.

(5) Adjust condenser C_5 so that the nut is turned about one-half way down.

(6) The dial pointer should point to the last line on the scale past 550 meters when the variable condenser rotor plates are completely meshed with the stator plates. If the dial pointer reads incorrectly it may be reset by first loosening the set-screws on the hub of the dial scale, holding the rotor plates fully in mesh and moving the dial scale until the last line on the scale past 550 meters is opposite the pointer on the escutcheon.

(7) Turn the condenser rotor plates all the way out and with the test oscillator adjusted for generating a signal of 456 kilocycles (657.8 meters) adjust I.F. trimmers for maximum output.

B. ADJUSTING 456 KC REJECTOR CIRCUIT.

(1) Connect oscillator antenna lead to yellow wire (antenna) of set and ground of oscillator to chassis.

(2) Tune test oscillator to 456 KC.

(3) With volume control on full position adjust wave trap condenser C_2 for minimum output.

(1) Disconnect "antenna" lead of test oscillator from grid cap of first detector tube and connect to the antenna terminal of the chassis.

(2) Tune the test oscillator and receiver to a wave-length of 200 meters (1500 kilocycles) and adjust condensers C_6 and C_7.

CAUTION: Extreme care should be taken in the preceding step so that the condensers are not adjusted to any other signal except the 200 meter wave-length of the signal generator or test oscillator.

(3) Turn the band selector switch to the "long wave" position.

(4) Tune the test oscillator and receiver to 1,000 meters (300 kilocycles) and adjust condenser C_8.

(5) Adjust condenser C_8 and C_4 for maximum deflection of the output meter with the test oscillator adjusted for 1,000 meters.

(6) Tune the test oscillator and receiver to 1740 meters (172.5 kilocycles) and adjust condenser C_5 for maximum deflection of the output meter regardless of the dial setting.

(7) Repeat steps 5 and 6 until the adjustment of condenser C_5 does not affect the adjustment made in Step 5 (1,000 meters).

(8) Tune test oscillator and receiver for a wave length of 2,000 meters (150 kilocycles) and check for operation of the receiver.

(9) Turn band selector switch back to "broadcast" position and tune test oscillator and receiver to 500 meters (600 kilocycles) and readjust condenser C_4 for maximum deflection of the output meter.

(10) Tune test oscillator and receiver to 200 meters (1500 kilocycles) and check for calibration and operation of the receiver. Repeat this procedure at 555 meters (900 kilocycles) and 500 meters (600 kilocycles).

NOTE: Slight readjustments of the condenser C_8 will be required after the receiver is connected to the antenna with which it is to be used. This condenser should be adjusted by tuning in a weak distant station between 200 and 250 meters, and adjusting the condenser to a point of maximum volume. Once adjusted, it need not be changed unless the antenna system is altered. This adjustment ideally matches the receiver to operate on any antenna.

VOLTAGE ANALYSIS AND CONTINUITY CHART

Line Voltage 115
Position of Voltage Compensator — 125

Position of Volume Control—Full with Antenna Disconnected
Position of Band Selector Switch—Broadcast

Tube	Location	PLATE Volts	PLATE Ma.	Screen Grid Volts	Control Grid Volts	Grid Res. to Ground Plate (Ohms)	RESISTANCE TO GROUND (OHMS) Plate	Screen	C. Grid	Cathode
6D6	1st Det.	240	3.5	90	—6.5	—	40,000	20,000	600,000	1,700
37	Osc. Stage	90	3.	—	—	—	90,000	—	25,000	0
6D6	I-F Stage	240	8.	90	—1.5	640,000	40,000	20,000	600,000	150
75	Diode Det.-A.V.C.	—	—	—	—	—	300,000			230
	Triode A-F	75	0.5	—	—1.0	—	390,000	—	250 000	
42	Power Stage	235	20.	240	—20.*	590,000	40,000	40,000	200 000	0
80	Rectifier	348**	25†	—	—	—	—	—	—	—

NOTES: Allow 15% + or — on all measurements.
All heater voltages: 6.3, except 80 Rectifier: 5.0 volts.
* Actual. About —12. volts as read on Jewell 444 Analyzer.
** Filament to negative of field.
† Per plate.

©John F. Rider, Publisher

©John F. Rider, Publisher

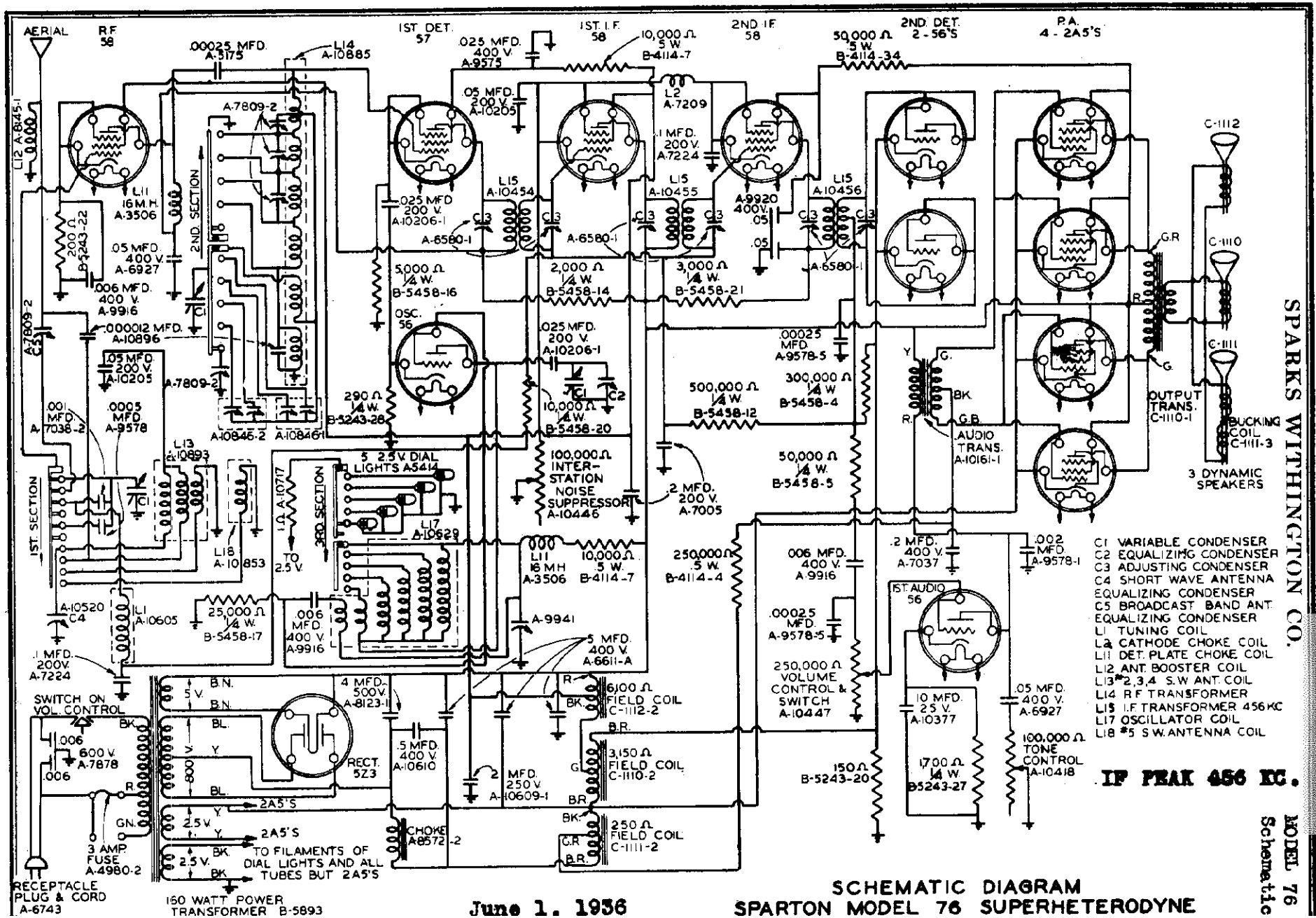

MODEL 76
Voltage, Resistance
Socket, Trimmers
Speaker Wiring

SPARKS WITHINGTON CO.

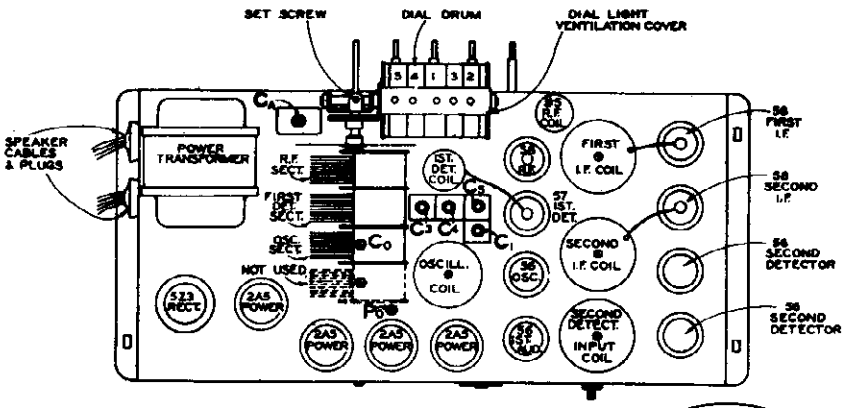

MODEL 76 CHASSIS DIAGRAM
(Top View)

VOLTAGE ANALYSIS AND CONTINUITY CHART

Line Voltage 115 — Position of Volume Control—Full with Antenna Disconnected
Position of Voltage Compensator 115-130 — Position of Band Selector Switch—Broadcast
Position of Inter-Station Noise Suppressor—Full — Position of Tone Control—Full

Tube	Location	PLATE Volts	PLATE Ma.	Screen Grid Volts	Control Grid Volts	RESISTANCE TO GROUND (OHMS) Plate	Screen	C. Grid	Cathode
58	R-F Stage	150	2.9	76.	—	10,000	5,600	1,000,000	200
57	1st Detector	145	.8	64.	—5.0	10,000	15,000	2	5,000
56	Oscilator	90	6.5	—	—17.5	17,500	—	25,000	300
58	1st I-F Stage	165	2.6	95.	—	8,000	5,500	1,000,000	14
58	2nd I-F Stage	155	2.6	100.	—	11,000	57,500	1,000,000	20
56	2nd Det.-A.V.C.	—	—	—	—	250,000	—	250,000	150
56	2nd Det.-A.V.C.	—	—	—	—	250,000	—	250,000	150
56	1st A-F Stage	150	4.7	—	—	9,500	—	350,000	1,700
2A5	Power Stage	270	25.0	285.	—20.	8,000	7,500	275,000	3,200
2A5	Power Stage	270	25.0	285.	—20.	8,000	7,500	275,000	3,200
2A5	Power Stage	270	25.0	285.	—20.	8,000	7,500	275,000	3,200
2A5	Power Stage	270	25.0	285.	—20.	8,000	7,500	275,000	3,200
523	Rectifier	430*	83.0	—	—	3,600	—	—	7,500

NOTES: Allow 15% + or — on all measurements.
All heater voltages: 2.5, except 523 Rectifier: 5.0 volts.
All measurements made with Weston Selective Analyzer No. 665, Type 1.
* A. C.

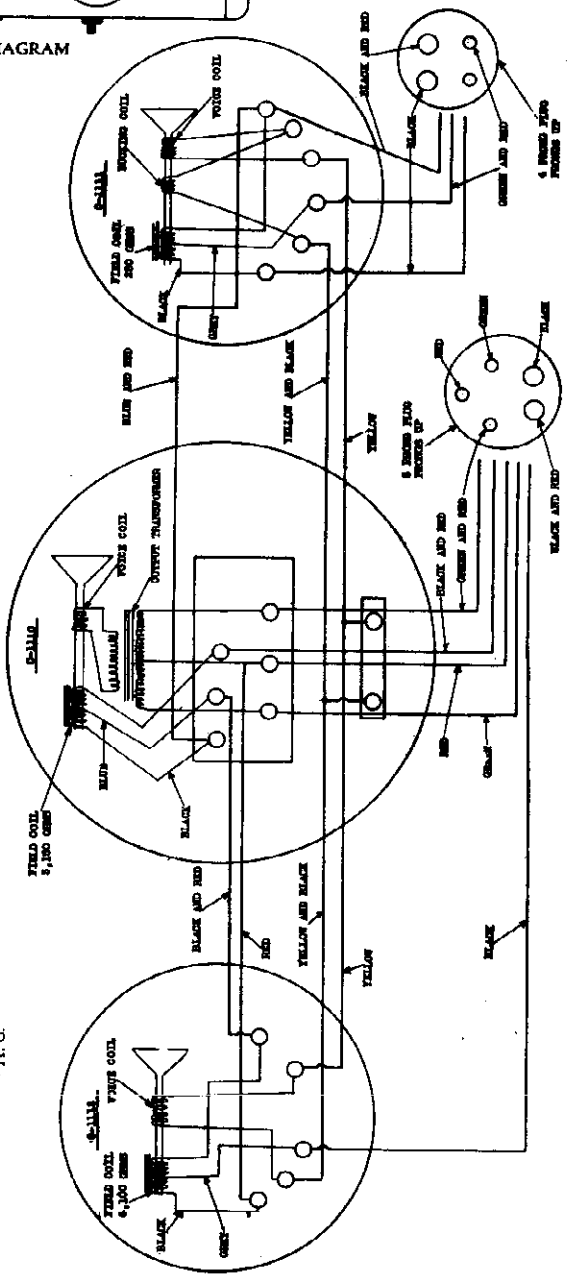

©John F. Rider, Publisher

©John F. Rider, Publisher

FOREWORD.

The automatic record changer in the SPARTON Models 85-X and 105-X is carefully built and assembled, and will operate satisfactorily without attention other than the oiling of the motor. This bulletin describes the mechanism and will assist in making any minor adjustments.

1. OPERATING INSTRUCTIONS.

The "On and Off" switch (see Paragraph 5) must be turned "on" as for radio reception. Allow about 30 seconds for tubes to heat up.

The toggle switch at the extreme right of the turntable is a master switch and must be snapped to the "on" position (away from the operator) for playing records and to the "off" position (towards operator) for operating the radio receiver.

Swing the tone arm and pickup to the right and lift it to the catch where it will remain clear from the turntable. If 10-inch records are to be played, move the thumb stop (on the right-hand side of the tone arm) back towards the tone arm pivot. If 12-inch records are to be played, move this stop forward.

Place one to eight records on the turntable.

Insert needle in pick-up and tighten firmly by means of the clamping screw in the end of the pick-up.

Snap the toggle switch at the left of the master switch to the "on" position (away from the operator). This starts the motor and turntable. CAUTION: Be sure the speed-change lever, located at the edge of the turntable at the front left-hand corner points to the No. 78.

Start the pick-up needle in the first groove of the record. Adjust the radio volume control for satisfactory volume. NOTE: If it is desired to increase or decrease the record speed slightly, remove the turntable by lifting straight up and shift the lever located directly to the left of the turntable shaft to the letter "F" for increased speed and to the letter "S" for slower speed.

10-inch records will be rejected automatically. To reject 12-inch records when they have finished playing, or to reject either 10-inch or 12-inch records at any time in order to play the next record below, pull the reject lever forward. This lever is located on the base plate just below the thumb stop of the tone arm.

Any record may be repeated indefinitely by lifting the throw-off arm (located at the back left-hand corner) to an upright position.

The last record on the turntable is not rejected and will continue to repeat as long as the switches are left in the "on" position. CAUTION: Use only a good grade of needle and do not play them more times than recommended by the needle manufacturer. Satisfactory results are seldom obtained with scratched, worn-out, or warped records

To play the large slow-speed records of the transcription type, the speed change lever must be moved to the No. 33-1/3. The lever automatically changes the speed of the turntable from 78 r.p.m.

CAUTION: Use only the special needles designed for playing 33-1/3 r.p.m. records. The speed change lever must be moved back to the "78" position for playing the regular 10-inch and 12-inch records.

2. MOTOR AND SPEED REGULATOR MECHANISM.

The Motor installed in this Record Changer is governor-controlled with all gearing enclosed and leaves the factory lubricated for proper operation under ordinary weather conditions for considerable time.

The main bearings of the motor are fed with lubricating oil by means of wicks which are completely installed.

The governor disc engages with a complete ring of hard felt which is impregnated with lubricating solution sufficient for proper operation for approximately a year under normal weather conditions; however, if the motor has a tendency to "chatter" or "waver", a drop or two of very light lubricating oil should be placed on this felt ring.

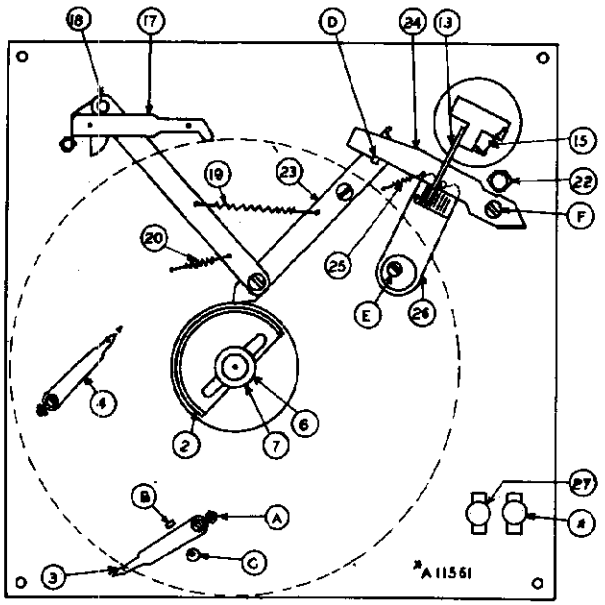

JUNE 1, 1936 FIG. 1

MODELS 85X, 105X, 105XS, 766XP
766XS, 1166XP, 1176XS
1176XP, 1176XS
Phonograph Data, Part 1

Motor Speed. - To adjust the speed at 78.26 r.p.m., the speed adjustment lever (Figure 1, No. 5) should be set above the legend "78" as marked on the base plate, the speed being adjusted by means of a speed regulator lever (Figure 1, No. 4) which is mounted under the turntable and is indicated for direction of swing to fast or slow by the legends "F" and "S" on the base plate.

Speed Lever Adjustment. - To adjust the speed adjustment lever for 33-1/3 r.p.m., remove the turntable and loosen the screw (A) which fastens the lever on to the motor shaft which protrudes through the base plate, and which is provided with a screw driver slot in the top. Turn the shaft to the stop in a clockwise direction, which places the motor in 33-1/3 r.p.m. position. Then set the change lever against the lug (B) and opposite the 33-1/3 legend on the base plate, and tighten the clamp screw (A). Then loosen the screw which holds the eccentric bushing stop (C) and allow the lever to be swung to its farthest position in 78 r.p.m. Then turn the eccentric bushing around until it touches the side of the long lever and tighten the screw which holds the eccentric.

5. TRIP MECHANISM.

Care should be taken that the Notch (D) Figure 1, fits properly and latches when the latch bar (No. 23) over-travels against the latch spring (No. 25). This spring should have sufficient tension so that when the trip unlatches, the lift lever (No. 24) from the square pin, the point of the latch bar (No. 23) is properly swung in front of the operating cam (No. 2). A re-setting spring (No. 20) and a trip spring (No. 19) both have loops on the ends to take care of the over-travel of the moving parts in re-setting the latch.

When latched, the engaging notch should be engaged approximately one-half its depth which is adjusted by means of the eccentric washer and lock screw (E). Care should be taken that these parts work freely in order that the mechanism will re-latch when the change cycle is completed.

The Record Changer is adjusted at the factory to trip on an eccentric trip groove record when the phonograph needle is 1-3/4" from the edge of the hole in the center. The eccentric trip is affected by means of the hardened steel pin pressed into the end of the tone arm lift crank (No. 15) riding on the serrated block located on the trip lever (No. 26). Care should be taken that there is a minimum of 1/32" clearance between the end of the pin and the block with a short phonograph needle in the pick-up and riding on top of one record on the turntable.

The oval head pivot screw (F) which serves as a pivot at the rear of the lift lever (No. 24) should be set at such a height to allow

©John F. Rider. Publisher

the lift lever to be raised by the latch bar (No. 3) and the roller to pass under the end of the lever without binding but without additional play.

4. RECORD REJECT MECHANISM.

The Record Changer is intended to be operated without removing the first (bottom) record on the turntable in order to prevent the phonograph needle from damaging the covering on the turntable.

The height of the assembly should be so adjusted that the turntable with one record on it measures ONE INCH FROM THE BASE PLATE TO THE TOP OF THE FIRST RECORD.

The screw shown at (G) Figure 2, allows the adjustment to be made so that the unloading finger will separate the second record from the first or, in other words, barely rises over the top edge of the first record in removing the second record.

Care should be taken that this assembly works freely and that no binding occurs in pivots or bearings, and that in normal playing position the unloading arm assembly rests on the stop screw.

Care should be taken that the distance between the edge of the unloading finger (H) at the point at which it engages with the record and the unloading lever (I) is 5/32 inch.

FIGURE 5.

Lift Adjustment. - To adjust the lift of the unloading lever, the latch bar should be placed in a position at its farthest throw against the face of the cam mounted on the turntable spindle.

Place a record between the unloading finger ball on the underside of the unloading lever (I). In this position the record should clear the turntable spindle. This adjustment is made by means of the eccentric stud which is rotated to adjust the proper height and locked by means of a nut on the underside of the base plate at (J).

5. TONE ARM MECHANISM.

To Adjust Lift of Tone Arm. - To adjust for proper lift of the tone arm, rotate the motor to the position with the latch bar against the cam face with the tone arm lifted. In this position, and with the tone arm stopped against the hub of the dash pot at No. 4, the point of the phonograph needle should be suspended 1-3/4 inches from the top of the base plate. This adjustment is made at the factory but, if for any reason the lift lever (Figure 1, No. 24) becomes bent, it should be raised at the point where the lift crank roller rests in above-described position until this dimension is obtained.

To adjust for the proper lowering of the tone arm on the edge of the 10-inch record, a 10-inch record should be placed on the turntable and the screw (shown at "K") is provided for adjusting the tone arm in or out until the needle lowers approximately 5/32 of an inch from the edge of the record.

FIGURE 4.

In order to set the tone arm pivot bearing to take up the vertical play, two Jam nuts (shown at "L") are provided on the pivot sleeve in the bottom of the tone arm base as a means for taking up the play and also for locking in permanent position.

6. DASH POT MECHANISM.

The dash pot, located at the right and in front of the tone arm, is provided to allow the tone arm to come down slowly as shown in Figure 4.

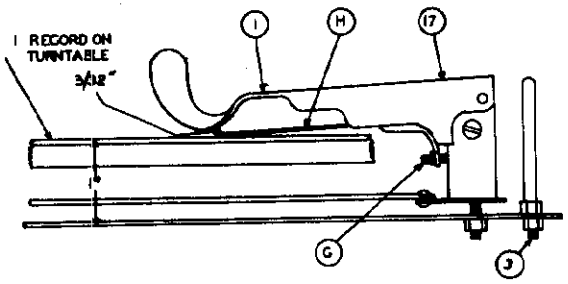

FIG. 2

With the tone arm of the Record Changer in the position as described under the tone arm adjustments, the dash pot should be adjusted for height by loosening the nut on top of the base plate as shown at (K), and should be raised or lowered until the tip of the dash pot shaft merely touches the lift shelf as shown at (D) WHILE IN 10-INCH RECORD-PLAYING POSITION.

IF TONE ARM FAILS TO TRIP WHEN A SPIRAL TYPE RECORD IS FINISHED PLAYING, check the latch mechanism (Figure 1, D) for depth of notch adjustment and determine whether the trip mechanism is binding anywhere; also check the pressure of springs (Figure 1, No. 19 and No. 20). Check the distance of the phonograph needle to the turntable spindle to make sure that the latch is disengaged at 1-3/4 inches. This may also be caused by a worn needle, worn record or a record without a trip groove.

IF TONE ARM FAILS TO TRIP AT THE END OF PLAYING AN ECCENTRIC GROOVE RECORD (VICTOR TYPE), check the lift crank assembly (Figure 3, No. 13) and determine whether it glides across the top of the serrated block (Figure 3, M). Be sure that there is sufficient clearance between the end of the pin in the lift crank which should be approximately 1/32 inch with a short phonograph needle in the pick-up, resting on the top of one record on the turntable.

The pressure of the needle on the serrated block as shown at Figure 3, M, is controlled by the pressure spring (Figure 3, No. 15), care being taken that this pressure is sufficient without binding to hold in the notches when the serrated groove rocks the tone arm.

IF TONE ARM FAILS TO LOWER PROPERLY ON THE RECORD, it may be caused by the dash pot's being improperly adjusted for height, resulting in the tone arm's bouncing against the dash pot cap. This can be readily eliminated as explained in adjustments for the dash pot (Figure 4).

IF TONE ARM LOWERS TOO SLOWLY, it may be caused by the leather binding in the cylinder of the dash pot due to too much oil or the leather being expanded too tightly against the cylinder. Remove the leather and remove the surplus oil. The mechanism should allow the tone arm to "float" down slowly.

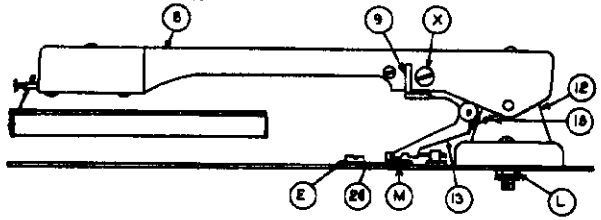

FIG.3

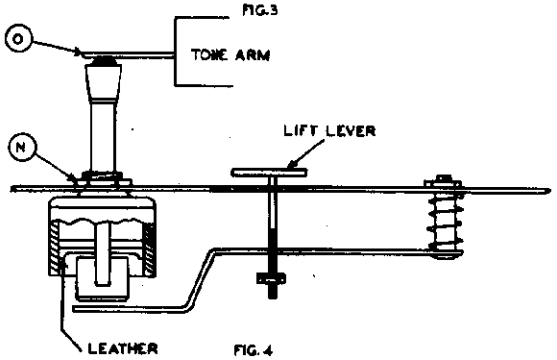

FIG. 4

SPARKS WITHINGTON CO.

MODELS 516, 516X, 546X
Schematic, Parts
Transformer

October 15, 1935

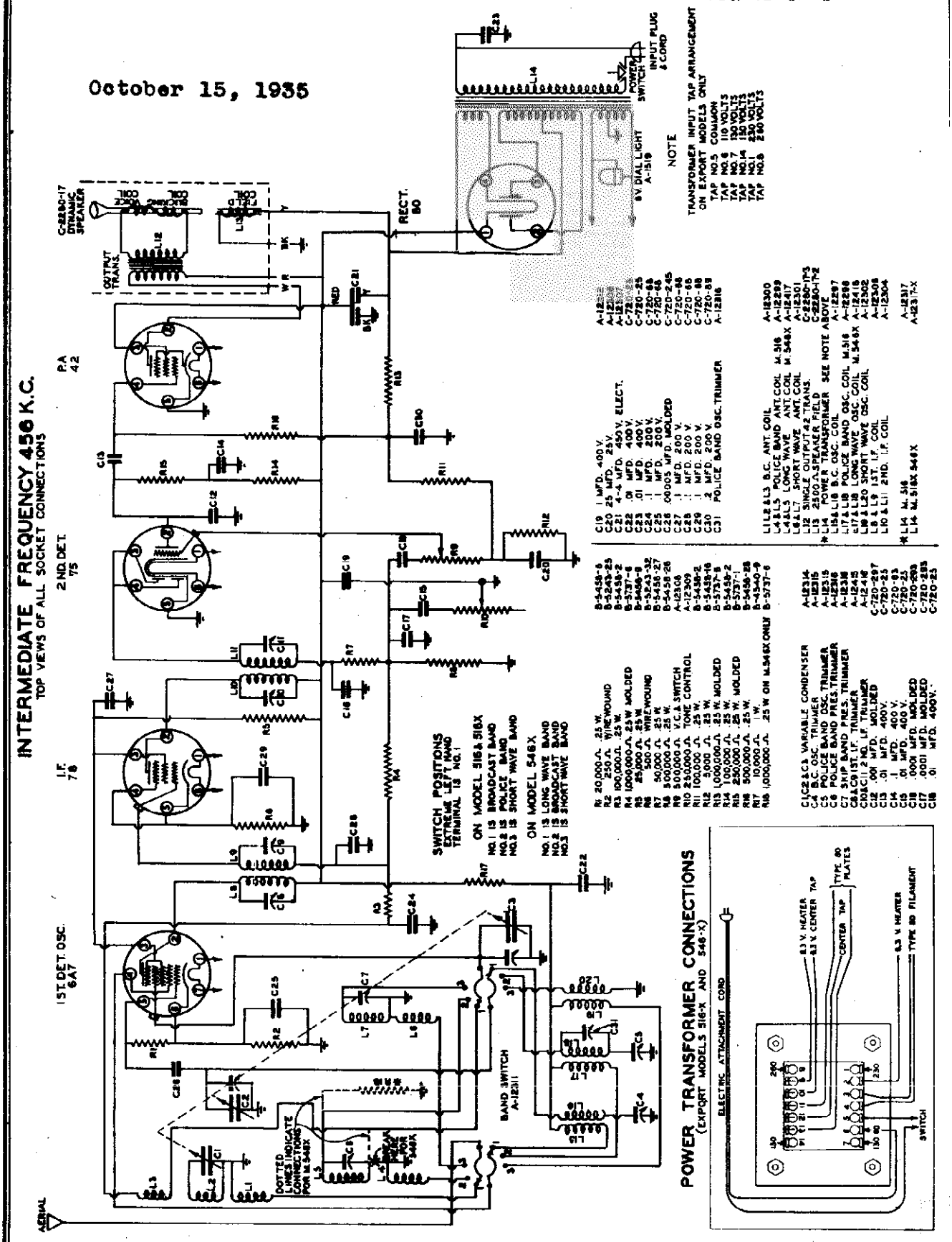

©John F. Rider, Publisher

MODELS 516, 516X, 546X
Voltage, Alignment
Socket, Trimmers
Resistance

SPARKS WITHINGTON CO.

The use of quality test equipment is highly recommended, and a good test oscillator becomes a virtual necessity when aligning a receiver of this type. Due to the fact that the ear cannot distinguish small changes in sound intensity, an output meter is essential to the proper adjustment of the various condensers.

Unless otherwise specified, the adjusting of any condenser consists of turning the adjusting screw or nut to the right or left until the output meter registers the greatest deflection.

1. EQUIPMENT REQUIRED

A. Modulated test oscillator (crystal controlled or accurately calibrated) capable of generating frequencies from 400 kc. to 20 mc.

B. Output meter.

C. SPARTON Part A-5732 Adjusting Wrench.

D. Dummy antennas consisting of a 600 ohm non-inductive, non-capacitive resistor.

2. STEP BY STEP PROCEDURE

For proper alignment of these receivers, the procedure should be followed in the same order as given.

A. Alignment of Intermediate-Frequency Stages.

(1) Turn on receiver and test oscillator and allow both to operate several minutes before attempting to align any condensers.

(2) Connect "antenna" of test oscillator to the grid cap of the type 6A7 first detector-oscillator tube, and "ground" of test oscillator to chassis frame of receiver. Connect output meter across the speaker input terminals.

NOTE: It is advisable to read carefully the operating instructions included with test oscillator.

(3) Tune test oscillator to obtain a signal of 456 kc.

(4) Turn the volume control of the receiver on full and short circuit the oscillator section of the variable condenser to ground.

(5) Adjust I-F condensers (C10 and C11). See Fig. 10.

NOTE: The condenser which is adjusted by means of the nut should first be brought to resonance; after which the condenser adjusted by the screw should be peaked.

(6) Adjust condensers C8 and C9 by first adjusting the grid circuit or nut adjustment and then adjusting the plate circuit or screw adjustment.

NOTE: As the gain of the receiver increases upon reaching resonance in the I-F circuit, the output of the signal generator should be constantly attenuated so that the indicating needle of the output meter is not thrown off scale or otherwise damaged.

Do not reduce the volume of the receiver to cut down the amount of output. This precaution will insure a type of peak not affected or broadened by the A.V.C. action.

(7) The above adjustment should be repeated with great care to insure accurate adjustment of the I-F condensers.

B. Alignment of Broadcast Band

The dial pointer should be exactly parallel with the horizontal lines of the kilocycle scale when the condenser plates are fully meshed. If the pointer does not read correctly, loosen the set screw which holds the dial disc to the condenser shaft, hold the rotor plates fully meshed with the stator plates and set the pointer so that it is parallel with the horizontal lines on the kilocycle scale, then tighten the set screw.

(1) Disconnect "antenna" lead of test oscillator from grid cap of first detector-oscillator tube and connect in series with the dummy antenna to the antenna binding post at the rear of the receiver.

(2) Turn the band selector switch to the extreme counter-clockwise position (broadcast band).

(3) Tune test oscillator and receiver to 1400 kc. and adjust trimming condensers C3, C2 and C1 in the order mentioned.

(4) Tune the receiver and the test oscillator to a frequency of 600 kc. and adjust condenser C4.

(5) Retune the receiver and the test oscillator to 1400 kc. and recheck the adjustments made on condensers C3, C2 and C1.

Sensitivity and calibration should be checked at 1000 kc., and if necessary, corrections may be made by bending the slotted plates of the variable condenser.

C. Alignment of Band No. 2 (MODELS 516 AND 516-X)

(1) Turn the band selector switch to the police band or central position for the knob.

(2) Tune test oscillator and receiver to a frequency of 3700 kc. and adjust condenser C31, which is reached from the front of the chassis.

(3) Tune test oscillator and receiver to a frequency of 1750 kc. and adjust condenser C5, also reached from the front of the chassis.

(4) Tune test oscillator and receiver to a frequency of 3700 kc. and adjust condenser C6.

C. Alignment of Band No. 2 (MODEL 546-X)

(1) Turn the band selector switch to the long wave or extreme left-hand position.

(2) Tune test oscillator and receiver to a frequency of 350 kc. and adjust condenser C31.

(3) Tune receiver and test oscillator to a frequency of 150 kc. and adjust condenser C5.

(4) Retune test oscillator and receiver to a frequency of 350 kc. and re-adjust condenser C31.

All adjustments made for long wave band should be carefully rechecked to assure accuracy and stability of adjustment.

D. Alignment of Band No. 3

(1) Turn the band selector switch to the short wave or extreme right-hand position.

(2) Tune the test oscillator and receiver to a frequency of 14 mc. and adjust condenser C7.

While this adjustment is being made, the tuning control of the signal generator should be moved slowly back and forth across the resonance point of the receiver. This will assist in obtaining a proper adjustment of this condenser. There are no oscillator, trimming or padder condensers for the foreign short wave band.

If trouble is experienced in obtaining proper alignment of these receivers, it may be due to the condition of the Type 6A7 first detector-oscillator tube, in which case the receiver should be re-aligned at 1000 kc. as follows:

With the band selector switch set to the broadcast position, tune the test oscillator and receiver to 1000 kc.

Carefully adjust either the receiver or the test oscillator so that maximum deflection of the output meter is obtained. Then, adjust condensers C8 and C9 in the first intermediate frequency transformer.

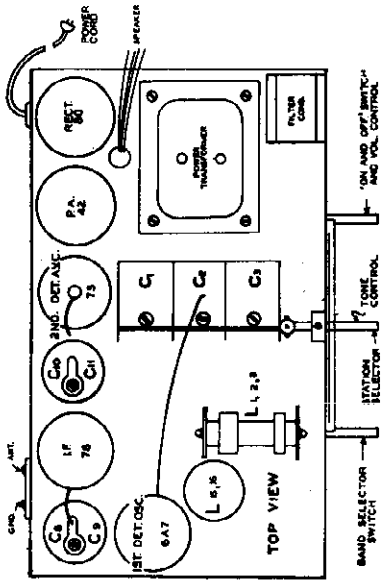

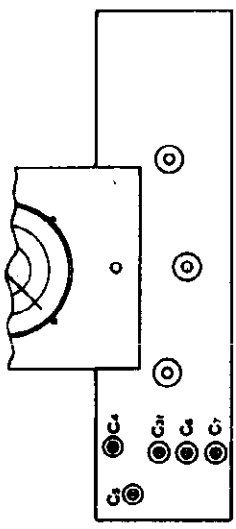

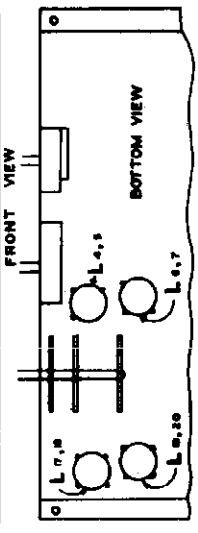

FIG. 17 CHASSIS DIAGRAM

VOLTAGE-RESISTANCE CHART

Line Voltage: 115 volts — Position of Volume Control: Full with Antenna Disconnected — Position of Band Selector Switch: Broadcast

Tube	Function	Voltage and Resistance of Each Socket Prong to Ground (See Prong Numbers on Schematic Diagram)										Grid Cap
		Measurement	Prong No. 1	Prong No. 2	Prong No. 3	Prong No. 4	Prong No. 5	Prong No. 6	Prong No. 7	Prong No. 8	Prong No. 9	
6A7	1st. Det-Oscillator	Volts	0	225	150	210	0	0	0	0	*	*
		Ohms	0	500000	500000	350000	20000	850	0	0	500000	500000
78	I - F Amplifier	Volts	0	0	220	110	0	0	-	-	*	*
		Ohms	0	175000	350000	C	500	0	-	-	500000	500000
75	2nd. Det-A.V.C.-1st. Audio	Volts	0	90	0	0	0	0	-	-	*	*
		Ohms	0	*	500000	500000	0	0	-	-	500000	500000
42	Power Amplifier	Volts	0	310	315	0	0	0	-	-	-	-
		Ohms	0	500000	500000	500000	0	0	-	-	-	-
80	Rectifier	Volts	0	360	360	0	-	-	-	-	-	-
		Ohms	500000	0	0	500000	-	-	-	-	-	-

NOTE: Voltage and resistance readings are for schematic diagram shown on back of sheet. Allow 15% + or - on all measurements. Always use meter scale which will give greatest deflection within scale limits. All measurements made with Weston Selective Analyzer No. 665, Type 1.
* Cannot be measured with Weston No. 665, Type 1.

©John F. Rider, Publisher

SPARKS WITHINGTON CO.

December 1, 1935

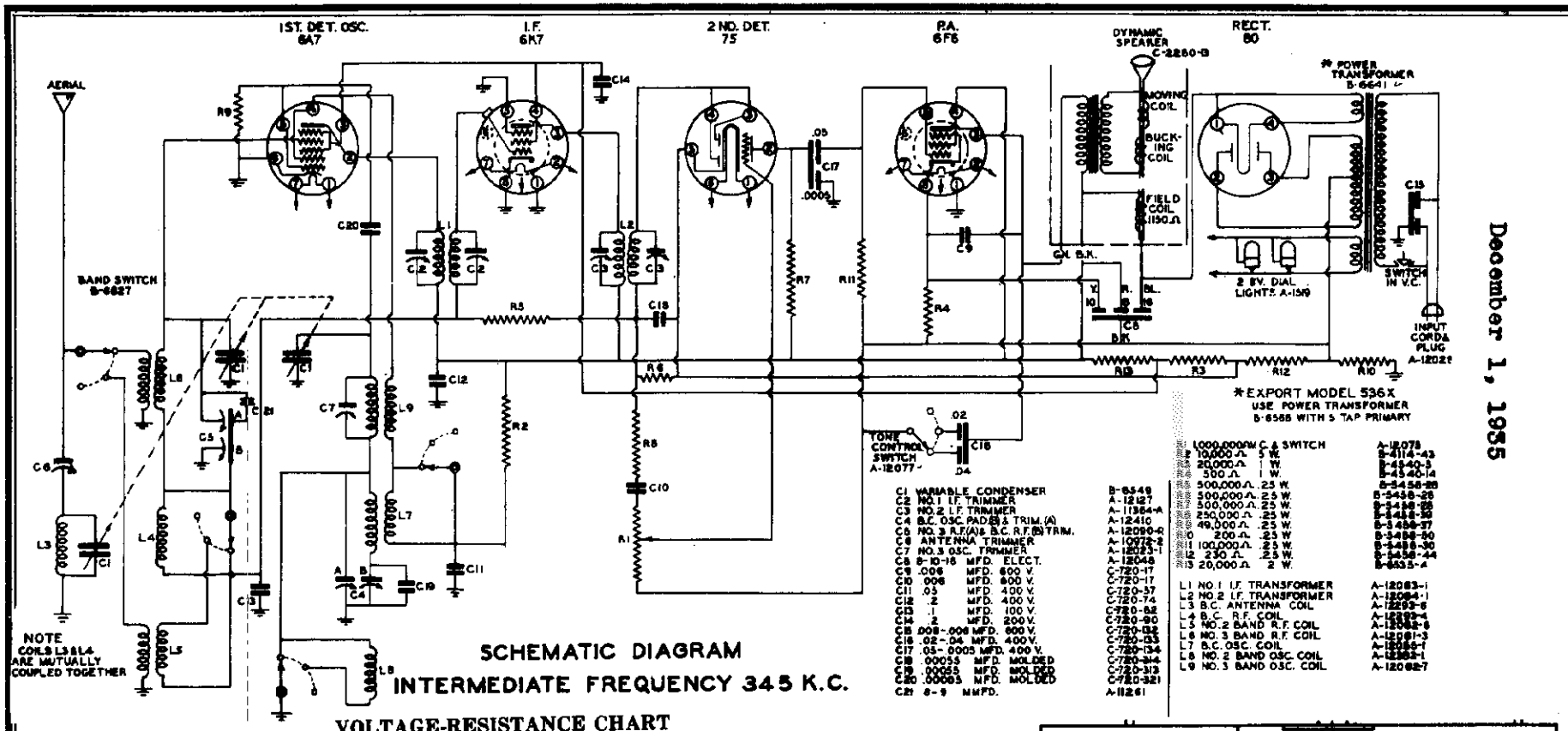

C1	VARIABLE CONDENSER	B-6549
C2	NO.1 I.F. TRIMMER	A-12127
C3	NO.2 I.F. TRIMMER	A-11364-A
C4	B.C. OSC. PAD (B) & TRIM. (A)	A-12410
C5	NO. 3 R.F.(A) & B.C. R.F.(B) TRIM.	A-12090-R
C6	ANTENNA TRIMMER	A-10972-2
C7	NO. 3 OSC. TRIMMER	A-12023-1
C8	8-10-16 MFD. ELECT.	A-12048
C9	.006 MFD. 600 V.	C-720-17
C10	.006 MFD. 600 V.	C-720-17
C11	.05 MFD. 400 V.	C-720-37
C12	.2 MFD. 400 V.	C-720-74
C13	.1 MFD. 100 V.	C-720-82
C14	.2 MFD. 200 V.	C-720-90
C15	.008-.006 MFD. 600 V.	C-720-132
C16	.02-.04 MFD. 400 V.	C-720-133
C17	.05-.0005 MFD. 400 V.	C-720-134
C18	.00055 MFD. MOLDED	C-720-314
C19	.00065 MFD. MOLDED	C-720-313
C20	.00005 MFD. MOLDED	C-720-321
C21	8-9 MMFD.	A-11261

* EXPORT MODEL 536X
USE POWER TRANSFORMER B-6568 WITH 5 TAP PRIMARY

	1,000,000Ω C & SWITCH	A-12078
	10,000Ω 5 W.	B-4114-43
	20,000Ω 1 W.	B-4140-5
	500Ω 1 W.	B-4140-14
	500,000Ω .25 W.	B-5458-28
	500,000Ω .25 W.	B-5458-28
	500,000Ω .25 W.	B-5458-28
	250,000Ω .25 W.	B-5458-27
	49,000Ω .25 W.	B-5458-37
	200Ω .25 W.	B-5458-20
L1	100,000Ω .25 W.	B-5458-30
L2	230Ω .25 W.	B-5458-44
L3	20,000Ω .2 W.	B-6535-A

L1	NO.1 I.F. TRANSFORMER	A-12083-1
L2	NO.2 I.F. TRANSFORMER	A-12084-1
L3	B.C. ANTENNA COIL	A-12093-5
L4	B.C. R.F. COIL	A-12092-4
L5	NO.2 BAND R.F. COIL	A-12082-6
L6	NO.3 BAND R.F. COIL	A-12091-3
L7	B.C. OSC. COIL	A-12085-7
L8	NO.2 BAND OSC. COIL	A-12082-1
L9	NO.3 BAND OSC. COIL	A-12082-7

VOLTAGE-RESISTANCE CHART

* 6.2 or zero volts, depending on twist of filament hook-up wire

** Resistance too high to be measured with Weston Selective Analyzer No. 665, Type 2.

Line Voltage: 115 volts

Position of Volume Control: Full with Antenna Disconnected

Position of Band Selector Switch: Broadcast

Tube	Function	Measurement	Prong No. 1	Prong No. 2	Prong No. 3	Prong No. 4	Prong No. 5	Prong No. 6	Prong No. 7	Prong No. 8	Grid Cap
			Voltage and Resistance of Each Socket Prong to Ground (See Prong Numbers on Schematic Diagram)								
6A7	1st. Det-Oscillator	Volts	*	290	115	290	0	0	*	-	0
		Ohms	0	35000	16000	40000	40000	0	0	-	**
6K7	I-F Amplifier	Volts	0	*	290	120	0	-	*	0	0
		Ohms	0	0	40000	20000	0	-	0	0	750000
75	2nd. Det-A.V.C.	Volts	*	100	0	0	0	*	-	-	0
		Ohms	0	500000	500000	500000	0	0	-	-	750000
6F6	Power Amplifier	Volts	0	*	360	355	400	-	*	0	-
		Ohms	0	0	40000	40000	90000	-	0	600	-
80	Rectifier	Volts	0	350	350	5.2	-	-	-	-	-
		Ohms	40000	0	0	40000	-	-	-	-	-

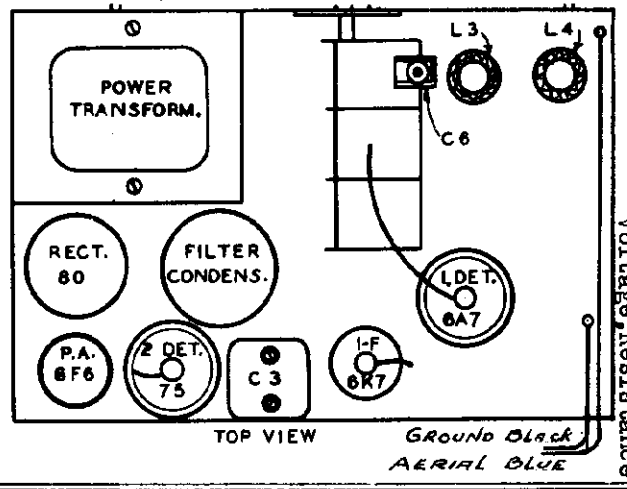

Detailed Alignment Instructions for 536 and 536-X

The use of quality test equipment is highly recommended and a good test oscillator becomes a virtual necessity when aligning the all-wave or short-wave type of receiver. Due to the fact that the ear cannot distinguish small changes in sound intensity, an output meter is essential to the proper adjustment of the various condensers.

Unless otherwise specified, the adjusting of any condenser consists of turning the adjusting screw or nut to the right or left until the output meter registers the greatest deflection.

1. EQUIPMENT REQUIRED

A. Modulated test oscillator (crystal controlled or accurately calibrated) capable of generating frequencies from 345 to 15,000 kilocycles.

B. Output meter.

C. Part A-5732 adjusting wrench.

D. Dummy antennas, consisting of a 150 mmf. condenser and a 400 ohm non-inductive resistor.

2. STEP BY STEP PROCEDURE

Note: For proper alignment of these chassis, the procedure should be followed in the same order as given.

In the following procedure, the broadcast band will be termed Band No. 1; the first short-wave band (green section of the dial), Band No. 2; the second short wave band (blue section of the dial), Band No. 3.

The dial pointer should be exactly parallel with the horizontal line of the kilocycle scale when the condenser plates are fully meshed. If the pointer does not read correctly, loosen the set screws in the large brass collar directly between the dial lights, hold the rotor plates fully meshed with the stator plates and set the pointer so that it is parallel with the horizontal lines on the kilocycle scale, then tighten the set screws.

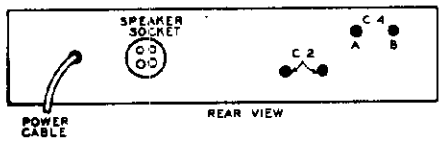

A. Alignment of Intermediate-Frequency Stages

(1) Turn on receiver and test oscillator and allow both to operate several minutes before attempting to adjust any condensers.

(2) Turn the band selector switch to the No. 1 (broadcast) position and turn the station selector knob until the rotor plates are completely out of mesh with the stator plates.

(3) Connect "antenna" of test oscillator to grid cap of Type 6A7 1st detector-oscillator tube and "ground" of test oscillator to chassis frame of receiver. Connect output meter "high tap" from plate of Type 6F6 tube to ground (See Fig. 1, Page 1, Bulletin No. 3-E). Note: It is advisable to read carefully the operating instructions included with the test oscillator.

(4) Tune test oscillator to obtain a signal of 345 kilocycles.

(5) Turn the volume control of receiver on full and adjust I.F. condensers C3 and C2. (See Fig. 10). Note: The intermediate frequency circuits are quite selective and care must be taken to insure proper adjustment.

B. Alignment of Broadcast Band

(1) Disconnect "antenna" lead of test oscillator from grid cap of first detector-oscillator tube and connect in series with a 150 mmf. condenser dummy antenna to the antenna terminal of the chassis.

(2) Tune test oscillator and receiver to a frequency of 1350 kilocycles, and without disturbing the setting of the test oscillator or the station selector, adjust condensers C4A, C5B and C6 in the order given.

(3) Tune test oscillator and receiver to 600 kilocycles and adjust condenser C4B.

(4) Retune test oscillator and receiver to 1350 kilocycles and check the adjustments of condensers C4A, C5B and C6.

(5) Calibration of the broadcast band should also be checked at 900 kilocycles and 600 kilocycles.

C. Alignment of Band No. 3

(1) Turn the band selector switch to the second short wave band (blue section of the dial).

(2) Remove the 150 mmf. condenser from "antenna" lead of test oscillator and replace with a 400 ohm non-inductive resistor dummy antenna.

(3) Tune test oscillator and receiver to 15 megacycles and adjust condensers C7 and C5A.

CAUTION: On this band care must be taken to adjust the various condensers to the fundamental of the signal and not to the image. The image signal is equal to the fundamental minus twice the intermediate frequency of the receiver.

A set that is adjusted to the image frequency instead of to the fundamental may be detected by tuning over the band and checking the sensitivity at various points. If a dead spot appears near the center of the band, the adjustable condensers for that band have probably been adjusted to the image instead of the fundamental.

This type of mis-alignment may also be detected by tuning the test oscillator to a frequency of 15 megacycles and the station selector to approximately 15,700 kilocycles. If a strong signal is found approximately at this frequency, it indicates that the band has been adjusted to the image frequency. The normal image frequency for 15,000 kilocycles would be 15,000 kilocycles minus twice 345 kilocycles or approximately 14,300 kilocycles. Therefore a signal of this frequency may be found with the test oscillator generating a 15,000 kilocycle signal.

(4) Retune the test oscillator and receiver to 9 megacycles and check sensitivity and calibration. (There is no oscillator padder for this band.)

D. Alignment of Band No. 2

Note: There are no adjustable condensers for this band. However, it is advisable to check the calibration of the dial and the general operation of the receiver at both 1.7 megacycles and 3.6 megacycles. CAUTION: All adjustments should be rechecked to assure accuracy and stability of adjustment and calibration.

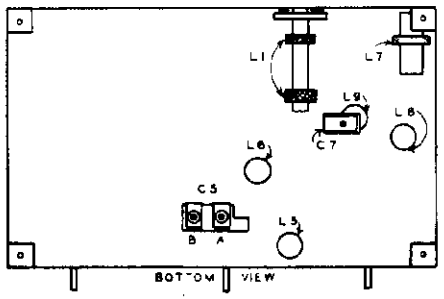

©John F. Rider, Publisher

SPARKS WITHINGTON CO.

MODELS 616M, 616MX, 666M
666MX
Schematic, Parts

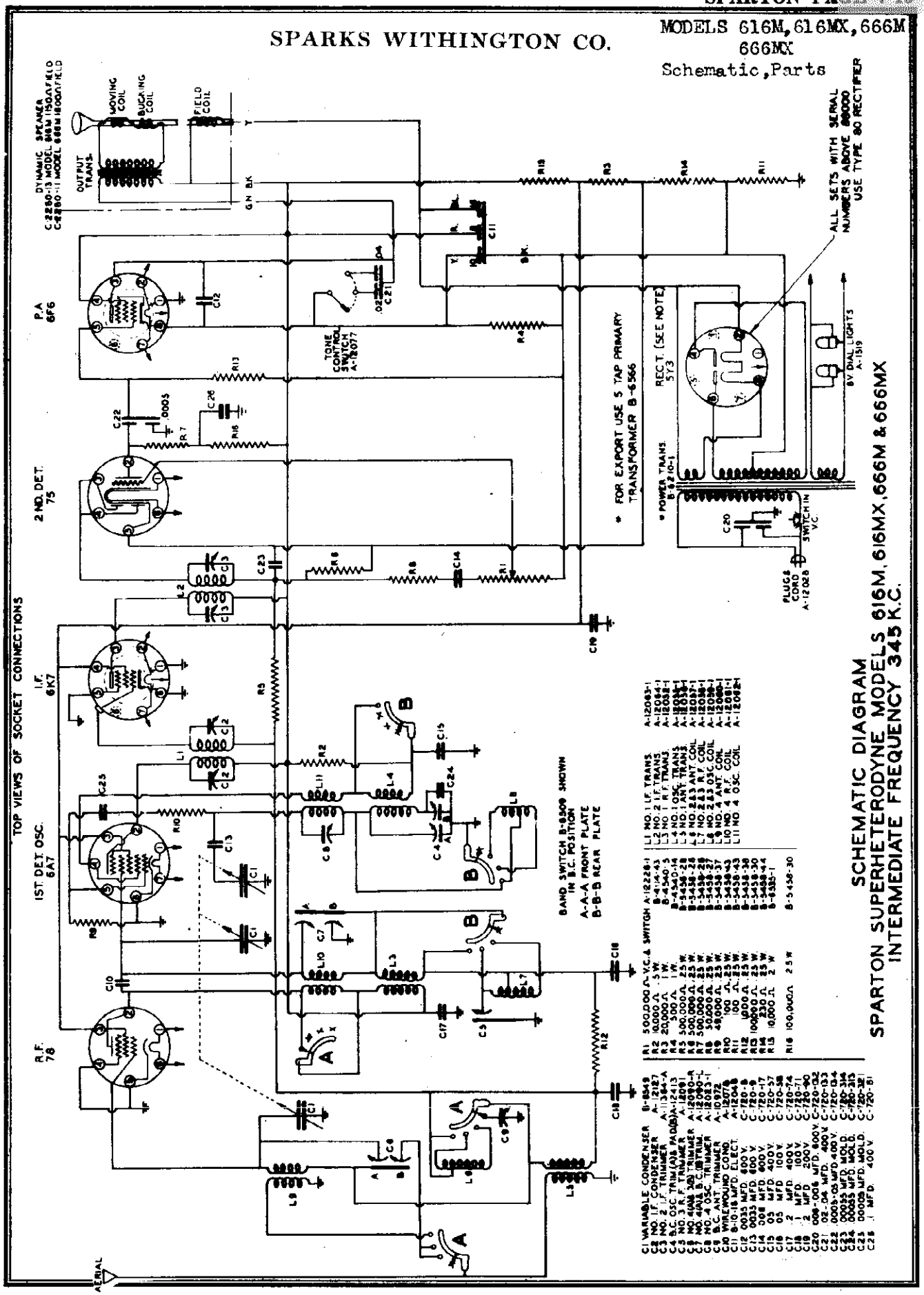

C1	VARIABLE CONDENSER	B-8349
C2	NO. 1 I.F. CONDENSER	A-12187
C3	NO. 2 I.F. TRIMMER	A-11384-A
C4	B.C. OSC. TRIM (AT PADS)	A-12413
C5	NO. 3 R.F. TRIMMER	A-12091
C6	NO. 4 (ANT.) TRIMMER	A-12090-A
C7	NO. 4 OSC. TRIMMER	A-12090-1
C8	B.C. ANT. TRIMMER	A-10972
C9	WIREWOUND COND.	A-12076
C10	8-10-18 MFD. ELECT.	A-12048
C12	.0035 MFD. 600 V.	C-720-8
C13	.0035 MFD. 600 V.	C-720-9
C14	.006 MFD. 600 V.	C-720-17
C15	.05 MFD. 400 V.	C-720-37
C16	.05 MFD. 100 V.	C-720-38
C17	.2 MFD. 400 V.	C-720-74
C18	.2 MFD. 200 V.	C-720-71
C19	.006-.006 MFD. 600 V.	C-720-90
C20	.02-.04 MFD. 400 V.	C-720-132
C21	.02-.04 MFD. 400 V.	C-720-133
C22	.0005 MFD. MOLD.	C-720-314
C23	.0035 MFD. MOLD.	C-720-315
C24	.00009 MFD. MOLD.	C-720-32
C25	.1 MFD. 400 V.	C-720-81

R1	500,000Ω	V.C. & SWITCH A-12228-1
R2	10,000Ω .5 W.	B-4114-43
R3	20,000Ω 1 W.	B-4340-5
R4	500Ω 1 W.	B-4340-14
R5	500,000Ω .25 W.	B-5458-28
R6	500,000Ω .25 W.	B-5458-28
R7	500,000Ω .25 W.	B-5458-28
R8	50,000Ω .25 W.	B-5458-27
R9	50,000Ω .25 W.	B-5458-27
R10	400Ω .25 W.	B-5458-43
R11	100Ω .25 W.	B-5458-43
R12	1000Ω .25 W.	B-5458-30
R13	100,000Ω .25 W.	B-5458-44
R14	230Ω .25 W.	B-5458-44
R15	10,000Ω 2 W.	B-8335-1
R16	100,000Ω .25 W.	B-5458-30

L1	NO. 1 I.F. TRANS. A-12063-1
L2	NO. 2 I.F. TRANS. A-12064-1
L3	NO. 1 R.F. TRANS. A-12058-1
L4	NO. 1 OSC. TRANS. A-12059-1
L5	NO. 1 ANT. TRANS. A-12057-1
L6	NO. 2&3 ANT. COIL A-12087-1
L7	NO. 2&3 R.F. COIL A-12088-1
L8	NO. 2&3 OSC. COIL A-12089-1
L9	NO. 4 ANT. COIL A-12060-1
L10	NO. 4 OSC. COIL A-12061-1
L11	NO. 4 OSC. COIL A-12061-2

©John F. Rider, Publisher

STEP BY STEP PROCEDURE

In the following procedure, the broadcast band will be termed Band No. 1; the first short wave band (green section of the dial), Band No. 2; the second short wave band (red section of the dial), Band No. 3; the third short wave band (blue section of the dial), Band No. 4. The dial pointer should be exactly parallel with the horizontal line of the kilocycle scale when the condenser plates are fully meshed. If the pointer does not read correctly, loosen the set screws in the large brass collar directly between the dial lights, hold the rotor plates fully meshed with the stator plates and set the pointer so that it is parallel with the horizontal lines on the kilocycle scale, then tighten the set screws.

A. Alignment of Intermediate Frequency Stages

(1) Turn on receiver and test oscillator and allow both to operate several minutes before attempting to adjust any condensers.

(2) Turn the band selector switch to the No. 1 [broadcast] position and turn the station selector knob until the rotor plates are completely out of mesh with the stator plates.

(3) Connect "antenna" of test oscillator to grid cap of Type 6A7 1st detector-oscillator tube and "ground" of test oscillator to chassis frame of receiver. Connect output meter "high tap" from plate of Type 6F6 tube to ground.

NOTE: It is advisable to read carefully the operating instructions included with test oscillator.

(4) Tune test oscillator to obtain a signal of 345 kilocycles.

(5) Turn the volume control of receiver on full and adjust I.F. condensers C3 and C2. (See Fig. 13). Note: The intermediate frequency circuits are quite selective and care must be taken to insure proper adjustment.

B. Alignment of Broadcast Band

(1) Disconnect "antenna" lead of test oscillator from grid cap of first detector-oscillator tube and connect in series with a 150 mmf. condenser dummy antenna to the antenna terminal of the chassis.

(2) Tune test oscillator to obtain a signal of 1350 kilocycles.

(3) Turn the station selector of the receiver to 1350 kilocycles and without disturbing the setting of the test oscillator or the station selector, adjust condensers C4A, C7B and C9 in the order given.

(4) Tune test oscillator and receiver to 600 kilocycles and adjust condenser C4B at the same time the station selector knob is moved back and forth to obtain maximum deflection of the output meter.

(5) Retune test oscillator and receiver to 1350 kilocycles and check the adjustments of condensers C4A, C7B and C9.

(6) Calibration of the broadcast band should also be checked at 900 kilocycles and 600 kilocycles.

C. Alignment of Band No. 4

(1) Turn the band selector switch to the third short wave band (blue section of the dial).

(2) Disconnect "antenna" lead of test oscillator from antenna terminal, remove the 150 mmf. condenser and replace with a 400 ohm non-inductive resistor dummy antenna and connect to grid cap of Type 78 R.F. tube.

(3) Tune test oscillator and receiver to 18 megacycles and adjust condenser C8 and condenser C7A.

CAUTION: On this band care must be taken to adjust the various condensers to the fundamental of the signal and not to the image. The image signal is equal to the fundamental minus twice the intermediate frequency of the receiver. A set that is adjusted to the image frequency instead of to the fundamental may be detected by tuning over the band and checking the sensitivity at various points. If a dead spot appears near the center of the band, the adjustable condensers for that band have probably been adjusted to the image instead of the fundamental.

This type of mis-alignment may also be detected by tuning the test oscillator to a frequency of 15 megacycles and the station selector to approximately 15,700 kilocycles. If a strong signal is found approximately at this frequency, it indicates that the band has been adjusted to the image frequency. The normal image frequency for 15,000 kilocycles would be 15,000 kilocycles minus twice 345 kilocycles or approximately 14,300 kilocycles. Therefore a signal of this frequency may be found with the test oscillator generating a 15,000 kilocycle signal.

(4) Disconnect the "antenna" of the test oscillator from the grid cap of the Type 78 R.F. tube and, using the 400 ohm resistor in series, connect to the antenna terminal.

(5) Adjust condenser C6A. Note: Due to the inter-action between the various circuits, it is necessary to move the station selector knob slightly while adjusting these trimmers in order to realize the maximum possible gain.

(6) Retune the test oscillator and receiver to 9 megacycles and check sensitivity and calibration.

D. Alignment of Band No. 3

(1) Turn the band selector switch to the second short wave band (red section of the dial).

(2) Tune test oscillator and receiver to 7.2 megacycles.

(3) Adjust condensers C5 and C6B.

(4) Tune test oscillator and receiver to 3.6 megacycles and check calibration and sensitivity.

E. Alignment of Band No. 2

Note: There are no adjustable condensers for this band. However, it is advisable to check the calibration of the dial and the general operation of the receiver at both 1.7 megacycles and 3 megacycles. CAUTION: All adjustments should be rechecked to assure accuracy and stability of adjustment and calibration.

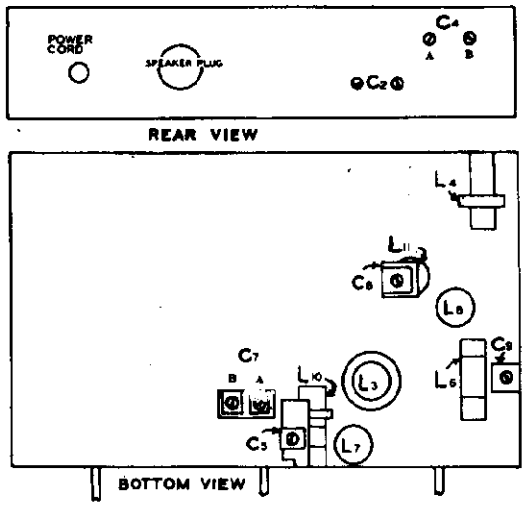

Socket, Voltage Resistance

SPARKS WITHINGTON CO.

VOLTAGE-RESISTANCE CHART

MODELS 616M, 616MX, 666M 666MX
MODELS 966, 966X

Line Voltage: 119 Models 616-M, 616-MX 666-M, 666-MX

Position of Volume Control: Full with Antenna Disconnected
Position of Band Selector Switch: Broadcast

Tube	Function	Voltage and Resistance of Each Socket Prong to Ground (See Prong Numbers on Schematic Diagram)									
		Measurement	Prong No. 1	Prong No. 2	Prong No. 3	Prong No. 4	Prong No. 5	Prong No. 6	Prong No. 7	Prong No. 8	Grid Cap
78	R-F Amplifier	Volts	0	310	160	0	0	*	-	-	**
		Ohms	0	28000	18000	0	0	0	-	-	1 meg
6A7	1st. Det-Oscillator	Volts	*	300	160	235	7	0	*	-	**
		Ohms	0	28000	18000	38000	5000	0	0	-	1 meg
6K7	I-F Amplifier	Volts	0	*	295	160	0	0	*	0	**
		Ohms	0	0	28000	19000	0	0	0	0	1 meg
75	2nd. Det-A.V.C.	Volts	*	140	**	**	0	*	-	-	**
		Ohms	0	600000	600000	600000	350	0	-	-	1 meg
6F6	Power Amplifier	Volts	0	*	280	300	0	18	*	18	-
		Ohms	0	0	28000	28000	135000	600	0	600	-
5Y3	Rectifier	Volts	-	440	-	405	-	410	-	440	-
		Ohms	-	30000	-	250	-	250	-	30000	-

Notes:- Voltage and resistance readings are for schematic diagram shown on back of sheet. Allow 15% + or - on all measurements. All measurements made with Weston Selective Analyzer No. 665, Type 1. Always use meter scale which will give greatest deflection within scale limits.

* Zero or 6 volts, depending on twist of filament (heater) hookup wire.

**Cannot be measured with Weston Selective Analyzer No. 665, Type 1.

Model 616-M, 616-MX
666-M, 666-MX

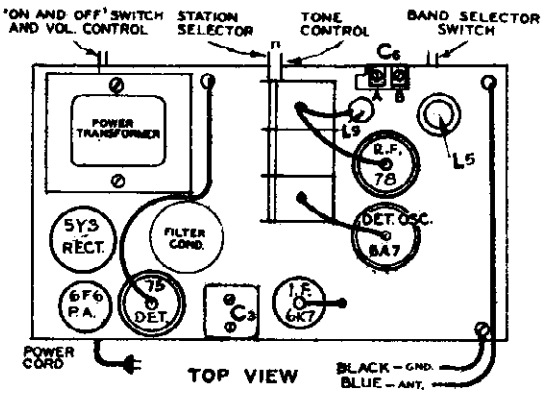

TOP VIEW

Model 966, 966-X

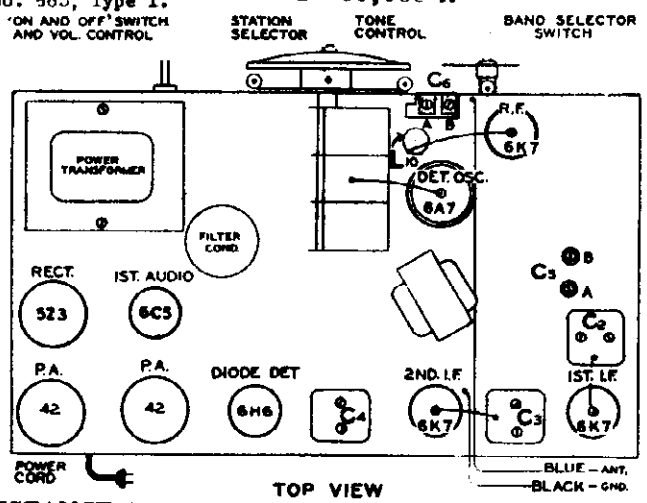

TOP VIEW

VOLTAGE-RESISTANCE CHART

Line Voltage: 115 volts Model 966, 966-X

Position of Volume Control: Full with Antenna Disconnected
Position of Band Selector Switch: Broadcast

Tube	Function	Voltage and Resistance of Each Socket Prong to Ground (See Prong Numbers on Schematic Diagram)									
		Measurement	Prong No. 1	Prong No. 2	Prong No. 3	Prong No. 4	Prong No. 5	Prong No. 6	Prong No. 7	Prong No. 8	Grid Cap
6K7	R-F Amplifier	Volts	0	0	250	120	0	-	0	0	*
		Ohms	0	0	25000	20000	0	-	0	0	500000
6A7	1st. Det-Oscillator	Volts	0	250	120	240	0	0	0	-	*
		Ohms	0	25000	20000	38000	42000	0	0	-	500000
6K7	1st. I-F Amplifier	Volts	0	0	250	120	0	-	0	0	*
		Ohms	0	0	25000	20000	0	-	0	0	500000
6K7	2nd. I-F Amplifier	Volts	0	0	250	120	0	-	0	0	*
		Ohms	0	0	28000	20000	0	-	0	0	0
6H6	2nd. Det-A.V.C.	Volts	0	0	0	0	0	-	0	*	-
		Ohms	0	0	0	0	125000	-	0	100	-
6C5	1st. A-F Amplifier	Volts	0	0	210	-	0	-	0	8	-
		Ohms	0	0	90000	-	175000	-	0	5000	-
42	Power Amplifier	Volts	0	250	260	0	8	0	-	-	-
		Ohms	0	28000	28000	2000	0	0	-	-	-
42	Power Amplifier	Volts	0	250	260	0	8	0	-	-	-
		Ohms	0	28000	28000	2000	0	0	-	-	-
5Z3	Rectifier	Volts	0	325	325	0	-	-	-	-	-
		Ohms	28000	0	0	28000	-	-	-	-	-
6E5	Viso-Glo	Volts	0	*	0	250	0	0	-	-	-
		Ohms	0	1000000	250000	28000	0	0	-	-	-

MODEL 81A
Schematic, Socket
Voltage, Resistance

SPARKS WITHINGTON CO.

October 25, 1935

SCHEMATIC DIAGRAM
SPARTON MODEL 81-A SUPERHETERODYNE I.F. 456 K.C.
COUNTRY HOME RECEIVER
(BATTERY OPERATED)
TOP VIEWS OF SOCKET CONNECTIONS SHOWN

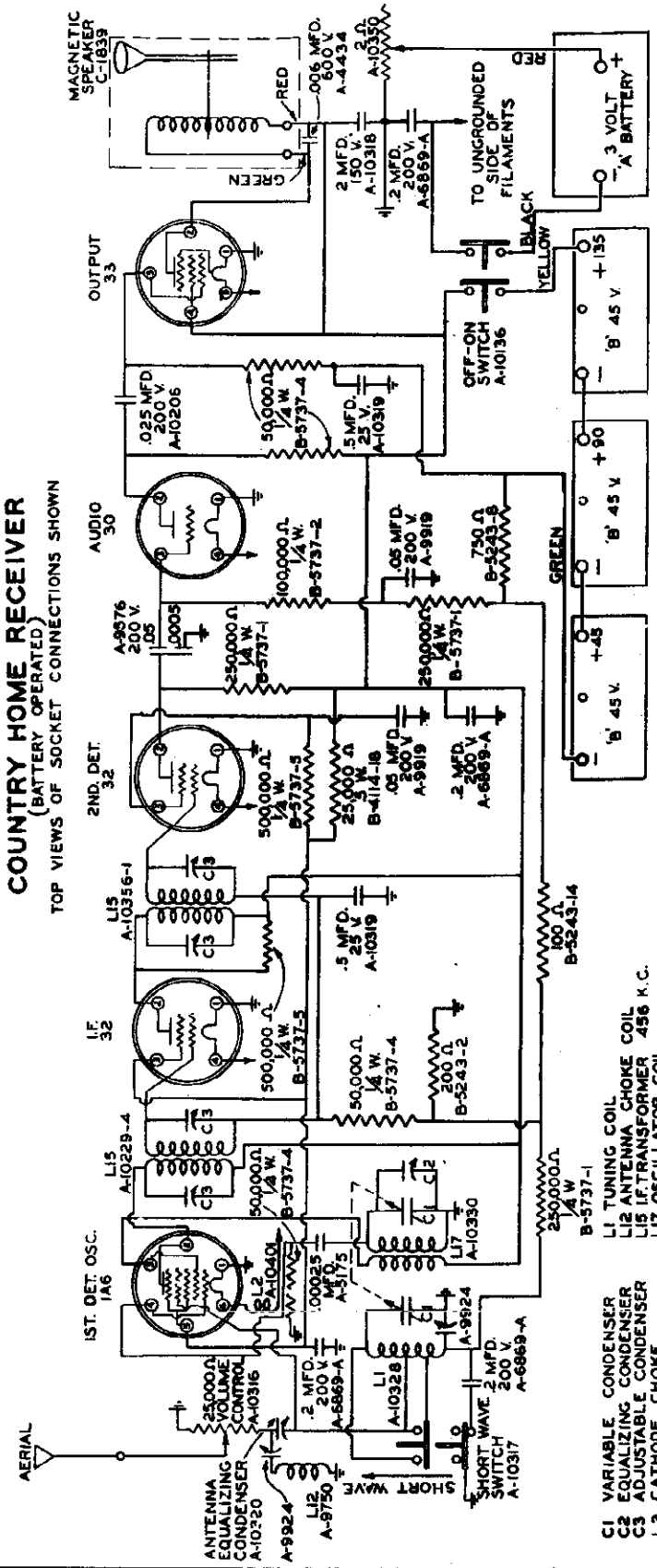

CHASSIS DIAGRAM SPARTON MODEL 81-A

VOLTAGE-RESISTANCE CHART

Condition of "A" Battery—Good Position of Volume Control—Full with Antenna Disconnected
Condition of "B" Batteries—Good Position of Band Selector Switch—Broadcast

Tube	Function	Measurement	Prong No. 1	Prong No. 2	Prong No. 3	Prong No. 4	Prong No. 5	Prong No. 6	Grid Cap
	Voltage and Resistance of Each Socket Prong to Ground (See Prong Numbers on Schematic Diagram)								
1A6	Ist. Det.-Oscillator	Volts	0	120	4	45	2	0	250000
		Ohms	0	1000000	100000	700000	1500000	0	-
32	I-F Amplifier	Volts	0	120	48	2	-	-	-
		Ohms	0	1000000	1500000	0	-	-	-
33	End. Detector	Volts	0	*	2	-	-	-	-
		Ohms	0	250000	850000	0	-	-	-
30	1st. Audio	Volts	0	24	0	2	-	-	-
		Ohms	0	800000	800000	0	-	-	-
33	Power Amplifier	Volts	0	100	*	120	2	-	-
		Ohms	0	200000	50000	200000	0	-	-

NOTES: Voltage and resistance readings are for schematic diagram shown. See note under schematic diagram. Allow 15% + or — on all measurements. Always use meter scale which will give greatest deflection within scale limits. All measurements made with Weston Selective Analyzer No. 666, Type I.
*Cannot be measured with Weston No. 666, Type I.

SPARKS WITHINGTON CO.

MODEL 636MX
Schematic
Parts

November 1, 1935

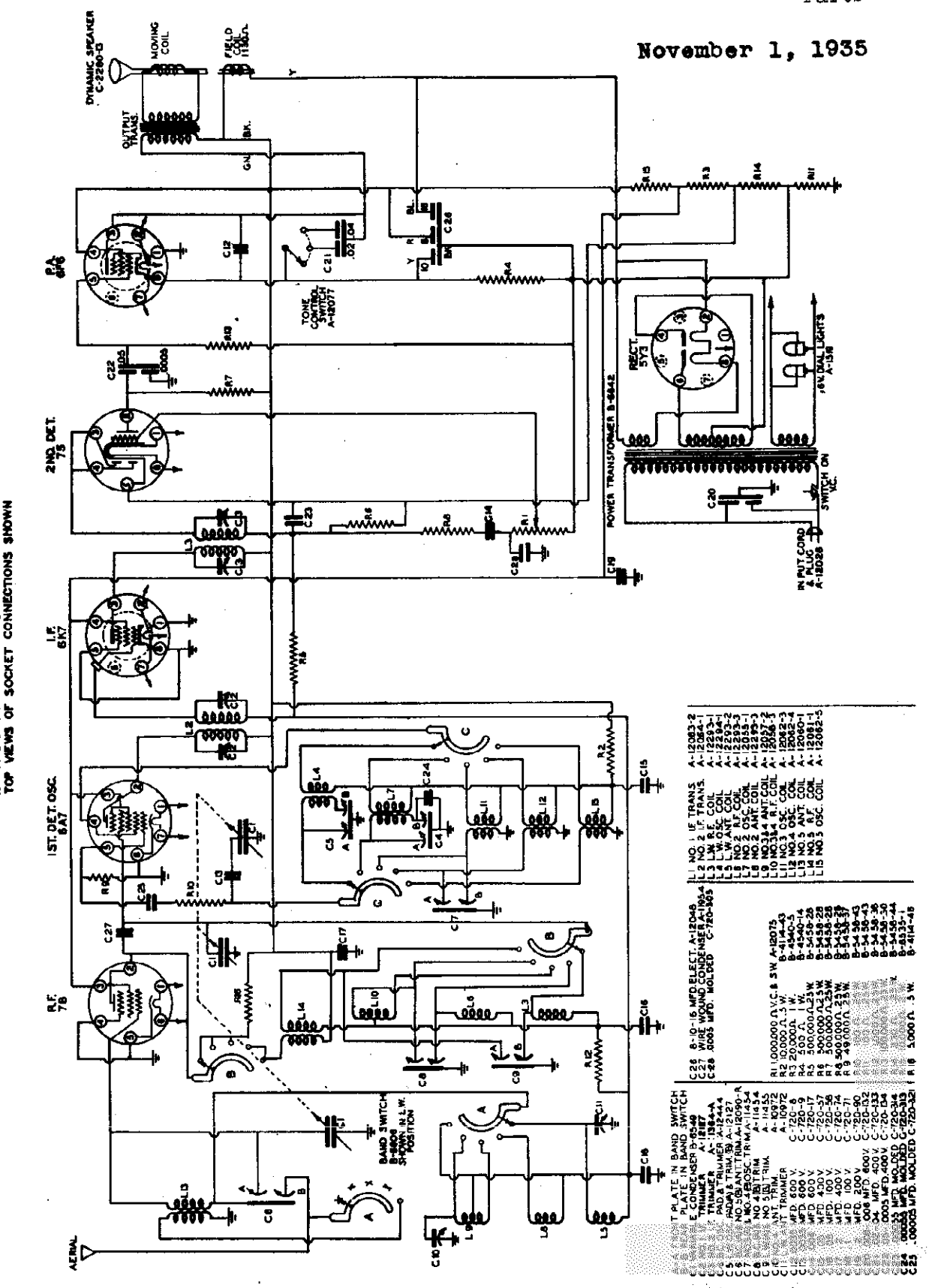

©John F. Rider, Publisher

MODEL 636MX
Voltage,Resistance
Socket.Trimmers
Alignment

SPARKS WITHINGTON CO.

September 28, 1935

VOLTAGE-RESISTANCE CHART

Line Voltage : 115 volts — Position of Volume Control: Full with Antenna Disconnected
Voltage Tap : 95 to 115 volts — Position of Band Selector Switch: Broadcast

Values are Reckoned from Each Socket Pins to Ground (See Pin Diagram for Each Socket)

Tube	Function	Measurement	Pin 1	Pin 2	Pin 3	Pin 4	Pin 5	Pin 6	Pin 7	Pin 8	Grid Cap
78	R-F Amplifier	Volts	+ 0	300	150	0	+	-	-	-	0
		Ohms	35000	22500	0		0				1000000
6A7	1st. Det-Oscillator	Volts	+ 0	250	140	250	0	+	-	-	1000000
		Ohms	34000	23000	40000	45000		+	0	-	
6A7	1-F Amplifier	Volts	0	300	250	0	-	+	0	0	0
		Ohms	+ 0	20000	22000		0				1000000
75	2nd. Det-A.V.C.	Volts	+ 0	100	0	+	+	-	-	-	0
		Ohms	500000	500000	500000	0	350				1000000
6F6	Power Amplifier	Volts	0	0	360	360	0	-	+	0	-
		Ohms	+ 0	0	30000	30000	1000000	-	+	600	-
5Y3	Rectifier	Volts	0	5	-	400	-	400	-	0	-
		Ohms	30000	-	0		-	0	-	30000	-

NOTES: Voltage and resistance readings are for schematic diagram shown on back of sheet. Allow 10% + or - on all measurements. Always use meter scale which will give greatest deflection within scale limits. All measurements made with Easton Selective Analyzer No. 665, Type 1.
* 6.3 or zero volts, depending on trim of filament hook-up wire.

FIG. 17

Values otherwise specified, the adjusting of any condenser consists of turning the adjusting screw or nut to the right or left until the output meter registers the greatest deflection.

1. EQUIPMENT REQUIRED

A. Modulated test oscillator (crystal controlled or accurately calibrated) capable of generating frequencies from 545 to 18,000 Kilocycles (550.5 to 16.6 meters).

B. Output meter.

C. Part A-7615 adjusting screw driver.

D. Dummy antennae, consisting of a 150 mmf. condenser and a 400 ohm non-inductive resistor.

2. STEP BY STEP PROCEDURE

Note: For proper alignment of these chassis, the procedure should be followed in the same order as given.

In the following procedure, the long wave band will be termed Band No. 1; the broadcast band, Band No. 2; the first short-wave band, Band No. 3; the second short-wave band, Band No. 4; and the third short-wave band, Band No. 5. The dial pointer should be exactly parallel with the horizontal line of the kilocycle scale when the condenser plates are fully meshed. If the pointer does not read correctly, loosen the set screws in the large brass collar on the drive shaft, hold the rotor plates fully meshed with the stator plates and set the pointer so that it is parallel with the horizontal lines on the tuning scale, and then tighten the set screws.

A. Alignment of Intermediate-Frequency Stages.

(1) Turn on receiver and test oscillator and allow both to operate several minutes before attempting to adjust any condensers.

(2) Turn the band selector switch to the No. 2 (broadcast) position and turn the station selector knob until the rotor plates are completely out of mesh with the stator plates.

(3) Connect "antenna" of test oscillator to grid cap of Type 6A7 1st detector-oscillator tube and "ground" of test oscillator to chassis frame of receiver. Connect output meter "low tap" across voice coil of speaker (See Fig. 1, Page 1, Bulletin No. 2-3). Note: It is advisable to read carefully the operating instructions included with the test oscillator.

(4) Tune test oscillator to obtain a signal of 550.5 meters.

(5) Turn the volume control of receiver on full and adjust I.F. condensers C8 and C8 which are reached from the top of the chassis. (See Fig. 17.) Note: The intermediate frequency circuits are quite selective and extreme care must be taken to insure proper adjustment; otherwise the set will be weak on the high frequency bands.

B. Alignment of Broadcast Band

(1) Disconnect "antenna" lead of test oscillator from grid cap of 1st detector-oscillator tube and connect in series with a 150 mmf. condenser dummy antenna to the antenna terminal of the chassis.

(2) Tune the test oscillator and receiver to a wavelength of 222.1 meters and adjust condensers C4A, C8A and C8A.

(3) Calibration and sensitivity of the broadcast band should also be checked at 333.1 meters and 499.7 meters.

(4) Retune the receiver and test oscillator to 222.1 meters and make any necessary adjustments on condensers C4A, C8A and C8A.

(5) Calibration and sensitivity of the broadcast band should also be checked at 333.1 meters and 499.7 meters.

(6) Calibration and sensitivity of this band should also be checked at a frequency of 884.8 meters.

C. Alignment of Band No. 1

(1) Turn the band selector switch to Band No. 1 (long wave band).

(2) Tune test oscillator and receiver to a wavelength of 999.4 meters and adjust condensers C8A, C8A and C1A.

(3) Tune test oscillator and receiver to a wavelength of 1999 meters and adjust condenser C1B.

(4) Retune test oscillator and receiver to 999.4 meters and rewrite condensers C8A, C8A and C1A.

(5) Calibration of this band should also be checked at 1799 meters.

D. Alignment of Band No. 2

(1) Turn the band selector switch to the No. 2 band and replace the 150 mmf. condenser dummy antenna with a 400 ohm non-inductive resistor dummy antenna.

(2) Tune the test oscillator and receiver to a wavelength of 545 and adjust condensers C2B and C2B.

(3) Calibration and sensitivity of this band should also be checked at 550.5 meters.

E. Alignment of Band No. 4

(1) Turn the band selector switch to Band No. 4 (third short-wave band).

(2) Tune test oscillator and receiver to a wavelength of 41.6 meters and adjust condensers C4A, C8A and C1A.

(3) Tune test oscillator and receiver to a wavelength of 49.7 meters and adjust condenser C4B.

F. Alignment of Band No. 3

(1) Turn the band selector switch to the 1st short-wave band.

(2) Tune test oscillator and receiver to a wavelength of 95.8 meters and adjust condenser C7A.

This band has an adjustable condenser for the antenna or R.F. circuits and no padder condenser for the oscillator circuit.

Sensitivity and calibration of this band should be also checked at 176.6 meters.

All adjustments should be re-checked to assure accuracy and stability of adjustment and calibration.

Warning: Extreme care must be taken when adjusting any of the short-wave bands so that the condensers are not adjusted to the image of the signal rather than the fundamental. The image signal is equal to the fundamental minus twice the intermediate frequency of the receiver. A set that is adjusted to the image frequency instead of to the fundamental may be detected by tuning over the band and checking the sensitivity at various points. If a dead spot appears near the center of the band, the adjustable condensers for that band have probably been adjusted to the image instead of the fundamental.

This type of mis-alignment may also be detected by tuning the test oscillator to a wavelength of 19.9 meters and the station selector to approximately 18.1 meters. If a strong signal is found approximately at this frequency, it indicates that the band has been adjusted to the image frequency. The normal image frequency for 19.9 meters would be 19.9 meters (15,000 K.C.) minus twice 545 kilocycles or approximately 20.9 meters. Therefore, a signal of this frequency may be found with the test oscillator set-ting at 19.9 meter signal.

©John F. Rider, Publisher

SPARKS WITHINGTON CO.

MODELS 716X, 766, 766XP
766XS
MODELS 966, 966X
Alignment, Trimmers

Foreword: Before attempting to realign the circuits of the above SPARTON Models, the serviceman should read carefully the information contained in Section 1 of Bulletin No. 3-E, pages 1 to 5 inclusive, especially the paragraphs pertaining to the use of a test oscillator, output meter, method of adjusting the various trimming and padding condensers and the bending of split condenser plate sections.

Unless otherwise specified, the adjusting of any condenser consists of turning the adjusting screw or nut to the right or left until the output meter registers the greatest deflection.

Alignment Instructions

1. EQUIPMENT REQUIRED

A. Modulated test oscillator (crystal controlled or accurately calibrated) capable of generating frequencies from 456 to 18,000 kilocycles.

B. Output meter.

C. Part A-9758 adjusting wrench.

D. Dummy antennae, consisting of a 150 mmf. condenser and a 400 ohm non-inductive resistor.

2. STEP BY STEP PROCEDURE

Note: For proper alignment of these chassis, the procedure should be followed in the same order as given.

In the following procedure, the broadcast band will be termed Band No. 1; the first short wave band (green section of the dial), Band No. 2; the second short wave band (red section of the dial), Band No. 3; the third short wave band (blue section of the dial), Band No. 4. The dial pointer should be exactly parallel with the horizontal line of the kilocycle scale when the condenser plates are fully meshed. If the pointer does not read correctly, loosen the set screws in the large brass collar directly between the dial lights, hold the rotor plates fully meshed with the stator plates and set the pointer so that it is parallel with the horizontal lines on the kilocycle scale, then tighten the set screws.

A. Alignment of Intermediate-Frequency Stages.

(1) Turn on receiver and test oscillator and allow both to operate several minutes before attempting to adjust any condensers.

(2) Turn the band selector switch to the No. 1 (broadcast) position and turn the station selector knob until the rotor plates are completely out of mesh with the stator plates.

(3) Connect "antenna" of test oscillator to grid cap of Type 6A7 1st detector-oscillator tube and "ground" of test oscillator to chassis frame of receiver. Connect output meter "low tap" across voice coil of speaker (See Fig.4)

Note: It is advisable to read carefully the operating instructions included with the test oscillator.

(4) Tune test oscillator to obtain a signal of 456 kilocycles.

(5) Turn the volume control of receiver on full and adjust I.F. condensers C4, C5 and C6 which are reached from the top of the chassis. (See Fig's.4)

Note: The intermediate frequency circuits are quite selective and care must be taken to insure proper adjustment.

B. Alignment of Broadcast Band.

(1) Disconnect "antenna" lead of test oscillator from grid cap of first detector-oscillator tube and connect in series with a 150 mmf. condenser dummy antenna to the antenna terminal of the chassis.

(2) Tune test oscillator to obtain a signal of 1350 kilocycles.

(3) Turn the station selector of the receiver to 1350 kilocycles and without disturbing the setting of the test oscillator or the station selector, adjust condensers C3A, C7B and C9 in the order given.

(4) Tune test oscillator and receiver to 600 kilocycles and adjust condenser C3B, at the same time the station selector knob is moved back and forth to obtain maximum deflection of the output meter.

(5) Retune test oscillator and receiver to 1350 kilocycles and check the adjustments of condensers C3A, C7B and C9.

(6) Calibration of the broadcast band should also be checked at 900 kilocycles and 600 kilocycles.

C. Alignment of Band No. 4 (6.5 to 20 Megacycles).

(1) Turn the band selector switch to the third short wave band (blue section of the dial).

(2) Disconnect "antenna" lead of test oscillator from antenna terminal, remove the 150 mmf. condenser and replace with a 400 ohm non-inductive resistor dummy antenna and connect to grid cap of Type 78 (Type 6K7 in Model 966) R.F. tube.

(3) Tune test oscillator and receiver to 18 megacycles and adjust condenser C8 and condenser C7A.

CAUTION: On this band care must be taken to adjust the various condensers to the fundamental of the signal and not to the image. The image signal is equal to the fundamental minus twice the intermediate frequency of the receiver. A set that is adjusted to the image frequency instead of to the fundamental may be detected by tuning over the band and checking the sensitivity at various points. If a dead spot appears near the center of the band, the adjustable condensers for that band have probably been adjusted to the image instead of the fundamental.

This type of mis-alignment may also be detected by tuning the test oscillator to a frequency of 15 megacycles and the station selector to approximately 15,900 kilocycles. If a strong signal is found approximately at this frequency, it indicates that the band has been adjusted to the image frequency. The normal image frequency for 15,000 kilocycles would be 15,000 kilocycles minus twice 456 kilocycles or approximately 14,100 kilocycles. Therefore a signal of this frequency may be found with the test oscillator generating a 15,000 Kd cycle signal.

(4) Disconnect the "antenna" of the test oscillator from the grid cap of the Type 78 (Type 6K7 in Model 966) R.F. tube and, using the 400 ohm resistor in series, connect to the antenna terminal.

(5) Adjust condenser C6A. Note: Due to the inter-action between the various circuits, it is necessary to move the station selector knob slightly while adjusting these trimmers in order to realize the maximum possible gain.

(6) Retune the test oscillator and receiver to 9 megacycles and check sensitivity and calibration.

D. Alignment of Band No. 3 (3.2 to 8.0 Megacycles).

(1) Turn the band selector switch to the second short wave band (red section of the dial).

(2) Tune test oscillator and receiver to 7.2 megacycles.

(3) Adjust condenser C11 and C6B.

(4) Tune test oscillator and receiver to 3.6 megacycles and check calibration and sensitivity.

E. Alignment of Band No. 2 (1.3 to 3.5 Megacycles).

Note: There are no adjustable condensers for this band. However, it is advisable to check the calibration of the dial and the general operation of the receiver at both 1.7 megacycles and 3 megacycles. CAUTION: All adjustments should be rechecked to assure accuracy and stability of adjustment and calibration.

The use of quality test equipment is highly recommended and a good test oscillator becomes a virtual necessity when aligning the all-wave or short-wave type of receiver. Due to the fact that the ear cannot distinguish small changes in sound intensity, an output meter is essential to the proper adjustment of the various condensers.

©John F. Rider, Publisher

MODELS 966, 966X
Schematic, Parts

SPARKS WITHINGTON CO.

June 1, 1936

SCHEMATIC DIAGRAM
SPARTON MODEL 966, 966-X SUPERHETERODYNE
INTERMEDIATE FREQUENCY 456 K.C.

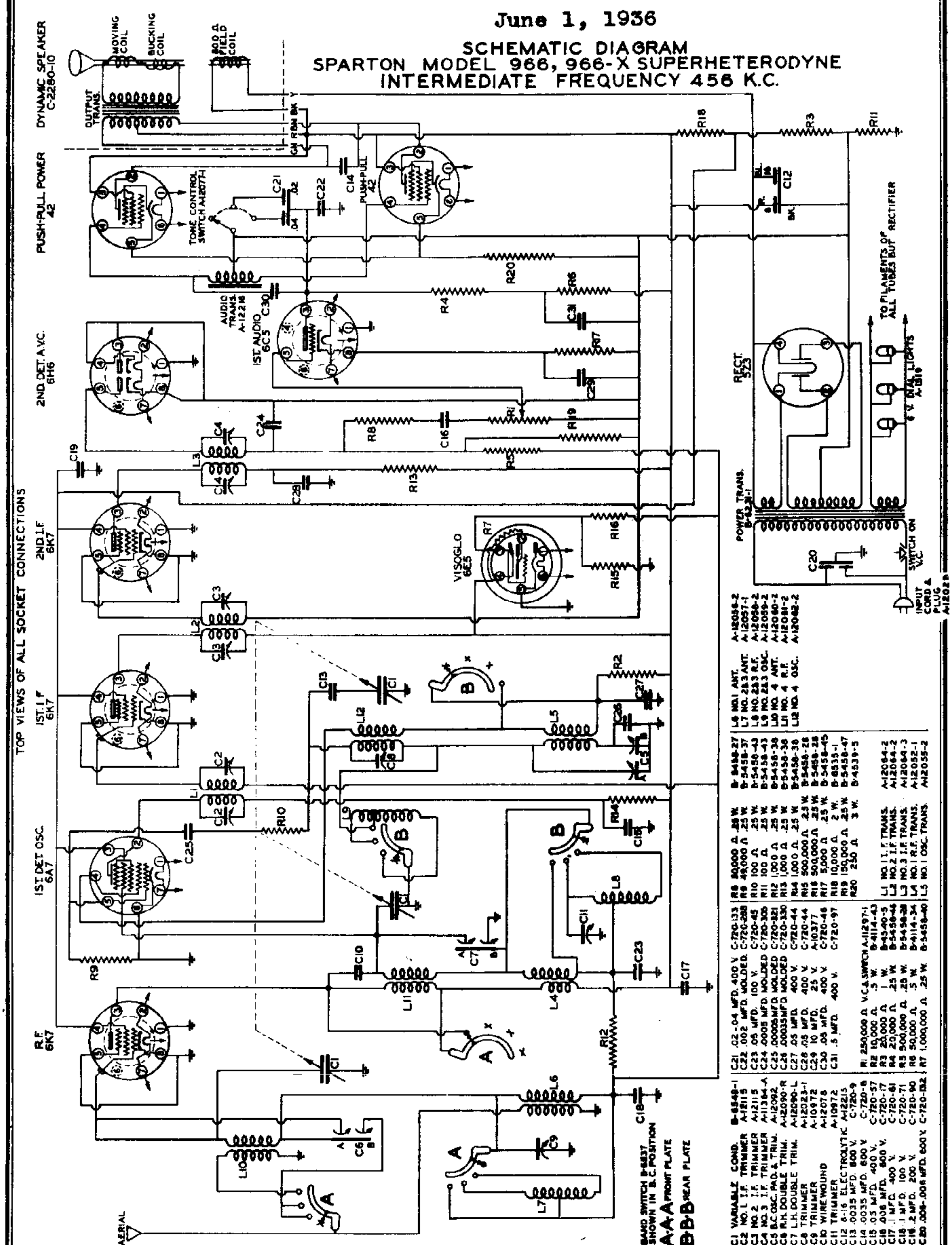

C1	VARIABLE COND.	B-6548-1
C2	NO. 1 I.F. TRIMMER	A-12115
C3	NO. 2 I.F. TRIMMER	A-12115
C4	NO. 3 I.F. TRIMMER	A-11364-A
C5	B.C. OSC. PAD. & TRIM.	A-12092
C6	R.H. DOUBLE TRIM.	A-12090-R
C7	L.H. DOUBLE TRIM.	A-12090-L
C8	TRIMMER	A-12023-1
C9	TRIMMER	A-10972
C10	WIRE WOUND	A-12078
C11	TRIMMER	A-10972
C12	8-16 ELECTROLYTIC	A-12215
C13	.0035 MFD. 600 V.	C-720-9
C14	.0035 MFD. 600 V.	C-720-6
C15	.03 MFD. 400 V.	C-720-57
C16	.006 MFD. 600 V.	C-720-17
C17	.1 MFD. 400 V.	C-720-61
C18	.1 MFD. 100 V.	C-720-71
C19	.2 MFD. 200 V.	C-720-90
C20	.006-.006 MFD. 600 V.	C-720-132
C21	.02-.04 MFD. 400 V.	C-720-133
C22	.002 MFD. MOLDED.	C-720-288
C23	.05 MFD. 100 V.	C-720-45
C24	.0005 MFD. MOLDED	C-720-305
C25	.00005 MFD. MOLDED	C-720-321
C26	.00035 MFD. MOLDED	C-720-330
C27	.05 MFD. 400 V.	C-720-44
C28	.05 MFD. 400 V.	C-720-44
C29	10 MFD. 25 V.	A-10377
C30	.05 MFD. 400 V.	C-720-46
C31	.5 MFD. 400 V.	C-720-97
R1	250,000 Ω V.C.& SWITCH	A-11297-1
R2	10,000 Ω .5 W.	B-4114-43
R3	20,000 Ω 1 W.	B-4540-5
R4	20,000 Ω .25 W.	B-5458-46
R5	500,000 Ω .25 W.	B-5458-28
R6	50,000 Ω .5 W.	B-4114-34
R7	1,000,000 Ω .25 W.	B-5458-40
R8	80,000 Ω .25 W.	B-5458-27
R9	48,000 Ω .25 W.	B-5458-37
R10	100 Ω .25 W.	B-5458-43
R11	100 Ω .25 W.	B-5458-43
R12	1,000 Ω .25 W.	B-5458-38
R13	1,000 Ω .25 W.	B-5458-38
R14	1,000 Ω .25 W.	B-5458-38
R15	500,000 Ω .25 W.	B-5458-28
R16	500,000 Ω .25 W.	B-5458-28
R17	5,000 Ω .25 W.	B-5458-45
R18	10,000 Ω 2 W.	B-6535-1
R19	150,000 Ω .25 W.	B-5458-47
R20	250 Ω 3 W.	B-4539-5
L1	NO. 1 I.F. TRANS.	A-12064-2
L2	NO. 2 I.F. TRANS.	A-12064-2
L3	NO. 3 I.F. TRANS.	A-12064-3
L4	NO. 1 R.F. TRANS.	A-12052-1
L5	NO. 1 OSC. TRANS.	A-12055-2
L6	NO. 1 ANT.	A-12056-2
L7	NO. 2 & 3 ANT.	A-12057-1
L8	NO. 2 & 3 R.F.	A-12058-2
L9	NO. 2 & 3 OSC.	A-12059-2
L10	NO. 4 ANT.	A-12060-2
L11	NO. 4 R.F.	A-12061-2
L12	NO. 4 OSC.	A-12062-2

©John F. Rider, Publisher

©John F. Rider, Publisher

SPARKS WITHINGTON CO.

November 15, 1935

MODELS 1116X, 1166, 1166XP
1166XS, 1176, 1176X
1176XS, 1186, 1196

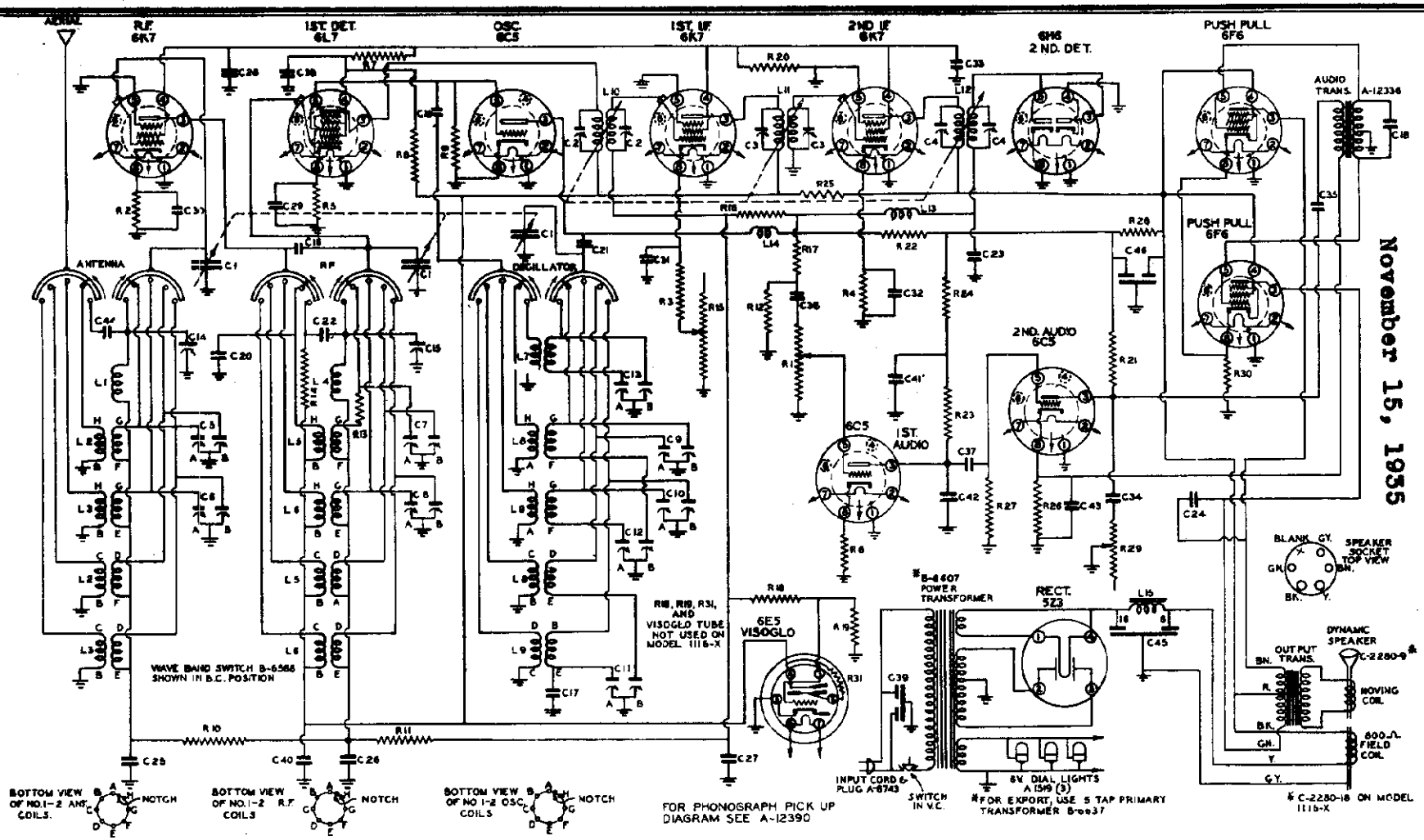

C1 VARIABLE CONDENSER B-6218-1	C20 .0001 MFD. MOLDED C-720-318	C39 .006-.006 MFD 600V. C-720-112	R10 50,000Ω .25 W. B-5458-27	R24 50,000Ω W. B-4540-7	L5 B.C. & NO.4 BAND R.F. COIL A-11213
C2 NO.1 I.F. TRIMMER A-11364-A	C21 .00005 MFD. MOLDED C-720-320	C40 .2 MFD. 600 V. C-720-93	R11 50,000Ω .25 W. B-5458-27	R25 3000Ω 10 W. B-5029-5	L6 NO.3 & 5 BAND R.F. COIL A-11214
C3 NO.2 I.F. TRIMMER A-11364-A	C22 .00005 MFD. MOLDED C-720-321	C41 .5 MFD. 400 V. C-720-100	R12 50,000Ω .25 W. B-5458-27	R26 1,500Ω .25 W. B-5458-48	L7 L.W. OSC. COIL A-12052-2
C4 NO.3 I.F. TRIMMER A-11364-A	C23 .00025 MFD. MOLDED C-720-319	C42 .0005 MFD. MOLDED C-720-331	R13 10Ω 1 W. B-6569-1	R27 250,000Ω .25 W. B-5458-39	L8 B.C. & NO.4 BAND OSC. A-11215
C5 NO.4 (#6-288) ANT. TRIM. A-12333	C24 .002 MFD. MOLDED C-720-288	C43 10MFD. 25V. ELECT. A-10377	R14 3000Ω .25 W. B-5458-19	R28 5000Ω 3 W. B-4539-6	L9 NO.3 & 5 BAND OSC. A-11216
C6 NO.3 (#6-288) ANT. TRIM. A-12334	C25 .05 MFD. 200 V. C-720-54	C44 12 MMFD. A-10896	R15 100,000Ω NOISE SUPP. A-10446	R29 100,000Ω TONE CON. A-11334-1	L10 NO. 1 I.F. COIL A-6314-16
C7 NO.4 (#6-288) R.F. TRIM. A-12333	C26 .05 MFD. 200 V. C-720-54	C45 16-8 MFD. ELECT. A-12330	R16 500,000Ω .25 W. B-5458-28	R30 300Ω 2 W. B-6535-2	L11 NO. 2 I.F. COIL A-6314-16
C8 NO.3 (#6-288) R.F. TRIM. A-12334	C27 .05 MFD. 200 V. C-720-54	C46 8-8 MFD. ELECT. A-11223-1	R17 100,000Ω .25 W. B-5458-30	R31 1,000,000Ω .25 W. B-5458-40	L12 NO. 3 I.F. COIL A-6314-17
C9 NO.2 (#6-403) OSC. TRIM. A-12333	C28 .1 MFD. 200 V. C-720-67		R18 2,000,000Ω .25 W. B-5458-26		L13 14.5 M.H. CHOKE A-3506-1
C10 NO.3 (#6-288) OSC. TRIM. A-12334	C29 .1 MFD. 100 V. C-720-62		R19 1,500,000Ω .25 W. B-5458-49		L14 14.5 M.H. CHOKE A-3506-1
C11 NO.1 (#6-288) OSC. PADDER A-10846-2	C30 .1 MFD. 100 V. C-720-62	R1 500,000Ω V.C.A. SWITCH A-12228	R20 25,600Ω 1 W. B-4540-6	L1 L.W. ANT. COIL A-12293-5	L15 CHOKE COIL A-12371
C12 NO.3 (#6-403) OSC. PADDER A-10846-3	C31 .1 MFD. 100 V. C-720-62	R2 400Ω .5 W. B-4114-44	R21 25,000Ω 1 W. B-4540-6	L2 B.C. & NO.4 BAND ANT. C. A-11211	
C13 L.W. PADDER (#6-288) TRIM. A-12229	C32 .1 MFD. 100 V. C-720-66	R3 400Ω .5 W. B-4114-44	R22 10,000Ω 1 W. B-4540-9	L3 NO. 3 & 5 BAND ANT. COIL A-11212	
C14 L.W. ANT. TRIM. A-12023-1	C33 .2 MFD. 200 V. C-720-92	R4 400Ω .5 W. B-4114-44	R23 5,000Ω .25 W. B-5458-45	L4 L.W. R.F. COIL A-12293-5	
C15 L.W. R.F. TRIM. A-12023-1	C34 .025 MFD. 600 V. C-720-34	R5 1000Ω .25 W. B-5458-35			
C16 8TO9 MMFD. A-11251	C35 .025 MFD. 600 V. C-720-34	R6 1000Ω .25 W. B-5458-35			
C17 .001 MFD. MOLDED C-720-297	C36 .025 MFD. 400 V. C-720-35	R7 5,000Ω 1 W. B-4540-16			
C18 .001 MFD. MOLDED C-720-297	C37 .025 MFD. 400 V. C-720-35	R8 3000Ω 1 W. B-4540-15			

INTERMEDIATE FREQUENCY 456 K.C.

TOP VIEWS OF SOCKET CONNECTIONS SHOWN

MODELS 1116X,1166,1166XP
1166XS,1176,1176XP
1176XS,1186,1196

SPARKS WITHINGTON CO.

VOLTAGE-RESISTANCE CHART

MODELS 1466,1476
Voltage,Resistance,Socket
Trimmers

Line Voltage: 110 volts
Position of Tone Control: High

Position of Volume Control: Full with Antenna Disconnected
Position of Band Selector Switch: Broadcast Band
Position of Inter-station Noise Suppressor: Full sensitivity

Tube	Function	Voltage and Resistance of Each Socket Prong to Ground (See Prong Numbers on Schematic Diagram)									
		Measurement	Prong No. 1	Prong No. 2	Prong No. 3	Prong No. 4	Prong No. 5	Prong No. 6	Prong No. 7	Prong No. 8	Grid Cap
6K7	R-F Amplifier	Volts	0	*	230	125	0	-	*	0	0
		Ohms	0	0	30000	24000	0	-	0	500	1 meg.
6L7	1st. Detector	Volts	0	*	225	190	0	-	*	0	0
		Ohms	0	0	30000	28000	55000	-	0	1000	1 meg.
6C5	Oscillator	Volts	0	*	240	-	150	-	*	0	-
		Ohms	0	0	50000	-	55000	-	0	0	-
6K7	1st. I-F Amplifier	Volts	0	*	200	110	0	-	*	0	0
		Ohms	0	0	30000	22500	0	-	0	0	1 meg.
6K7	2nd. I-F Amplifier	Volts	0	*	290	125	0	-	*	0	0
		Ohms	0	0	32000	22500	0	-	0	0	0
6H6	2nd. Detector, AVC.	Volts	0	*	0	0	0	-	*	0	-
		Ohms	0	0	150000	0	150000	-	0	0	-
6C5	1st. A-F Amplifier	Volts	0	*	210	-	0	-	*	0	-
		Ohms	0	0	95000	-	0	-	0	1000	-
6C5	2nd. A-F Amplifier	Volts	0	*	230	-	0	-	*	0	-
		Ohms	0	0	70000	-	500000	-	0	1500	-
(2) 6F6	Power Amplifiers	Volts	0	*	300	300	0	-	*	0	-
		Ohms	0	0	35000	34000	2000	-	0	300	-
5Z3	Rectifier	Volts	0	360	360	0	-	-	-	-	-
		Ohms	35000	0	0	35000	-	-	-	-	-
6E5	Viso-Glo	Volts	*	40	225	0	0	*	-	-	-
		Ohms	0	1 meg.	1 meg.	30000	0	0	-	-	-

SUPER-POWER AUDIO AMPLIFIER UNIT *ON MODELS 1466 & 1476 ONLY*

(2) 6A6	Power Amplifiers	Volts	0	340	0	0	0	350	0	-	-
		Ohms	0	6500	0	0	0	6500	0	-	-
5Z3	Rectifier	Volts	5	320	320	0	-	-	-	-	-
		Ohms	6500	0	0	6500	-	-	-	-	-

Notes: Voltage and resistance readings are for schematic diagram shown on back of sheet. Allow 15% + or - on all measurements. Always use meter scale which will give greatest deflection within scale limits. All measurements made with Weston Selective Analyzer No. 665. Type 2.
* Reading will be 6.3 or zero volts, depending on twist of filament hook-up wire.

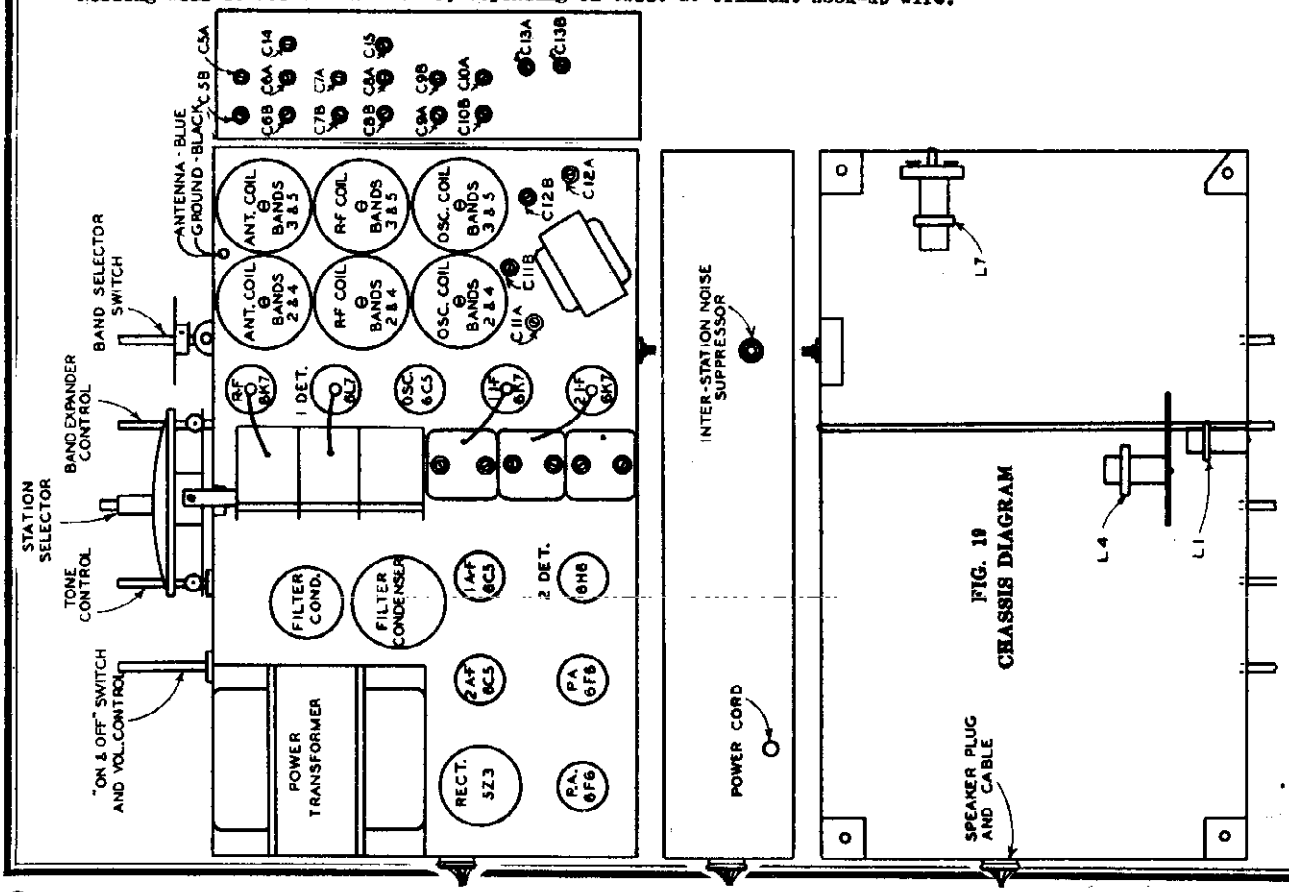

FIG. 19 CHASSIS DIAGRAM

© John F. Rider, Publisher

SPARKS WITHINGTON CO.

MODELS 1116X, 1166, 1166XP 1166XS, 1176, 1176XP 1176XS, 1186, 1196 MODELS 1466, 1476

Alignment, Phonograph, Data

The use of quality test equipment is highly recommended and a good test oscillator becomes a virtual necessity when aligning the all-wave type of receiver. Due to the fact that the ear cannot distinguish small changes in sound intensity, an output meter is essential to the proper adjustment of the various condensers.

Unless otherwise specified, the adjusting of any condenser consists of turning the adjusting screw or nut to the right or left until the output meter registers the greatest deflection.

1. EQUIPMENT REQUIRED

A. Modulated test oscillator (crystal controlled or accurately calibrated) capable of generating frequencies from 456 to 18,000 kilocycles (18 megacycles).

B. Output meter.

C. Part A-7618 adjusting wrench.

D. Dummy antennas, consisting of a 150 mmf. condenser and a 400 ohm non-inductive resistor.

2. STEP BY STEP PROCEDURE

Note: For proper alignment of these chassis, the procedure should be followed in the same order as given.

In the following procedure, the long wave band (brown section of the dial) will be termed Band No. 1; the broadcast band (black section of the dial), Band No. 2; the first short wave band (green section of the dial), Band No. 3; the second short wave band (red section of the dial), Band No. 4; and the third short wave band (blue section of the dial), Band No. 5.

meshed with the stator plates and set the pointer so that it is parallel with the horizontal lines on the kilocycle scale, and then tighten the set screws.

A. Alignment of Intermediate-Frequency Stages.

(1) Turn on receiver and test oscillator and allow both to operate several minutes before attempting to adjust any condensers.

Note: It is advisable to read carefully the operating instructions which accompany the test oscillator before proceeding with any alignment work.

(2) Turn the band selector switch to the No. 2 (broadcast) position and turn the station selector knob until the rotor plates are completely out of mesh with the stator plates.

(3) Connect "antenna" of test oscillator to grid cap of the Type 6L7 1st detector tube and "ground" of test-oscillator to chassis frame of receiver. Connect output meter "high tap" from plate of Type 6V6 tube in 11-tube sets or from plate of Type 6A8 in 14-tube sets, to ground. (See Fig. 1, Page 1, Bulletin No. 8-R.)

(4) Tune test oscillator to obtain a signal of 456 kilocycles.

(5) Turn the volume control of the receiver on full and adjust I-F condensers C4, C7 and C8 in the order mentioned. (See Fig. 10). Note: The intermediate-frequency circuits are quite selective and extreme care must be taken to insure proper adjustment, otherwise the set will be weak on the high frequency bands.

Note: It is advisable to retard the inter-station noise suppressor so that the output of the receiver is reduced as the intermediate-frequency circuits are aligned, otherwise the set will be too sensitive to obtain an accurate reading on the output meter.

B. Alignment of Broadcast Band

(1) Disconnect "antenna" lead of oscillator from grid cap of Type 6L7 tube and connect in series with the 150 mmf. condenser dummy antenna to the antenna terminal of the chassis.

The dial pointer should be exactly parallel with the horizontal lines of the kilocycle scale when the condenser plates are fully meshed. If the pointer does not read correctly, loosen the set screws in the large brass collar on the drive shaft. Hold the rotor plates fully

(2) Tune the test oscillator and receiver to a frequency of 1360 kilocycles and adjust condensers C9B, C9A and C8A.

(3) Tune test oscillator and receiver to a frequency of 600 kilocycles and adjust condenser C12B.

(4) Retune the receiver and test oscillator to 1360 kilocycles and make any necessary adjustments on condensers C9B, C9A and C8A.

(5) Calibration and sensitivity of the broadcast band should also be checked at 600 kilocycles, 900 kilocycles and 1360 kilocycles.

C. Alignment of Band No. 1

(1) Turn the band selector switch to Band No. 1 (orange band).

(2) Tune test oscillator and receiver to a frequency of 345 kilocycles and adjust condensers C13B, C15 and C14.

(3) Tune test oscillator and receiver to a frequency of 150 kilocycles and adjust condenser C13A.

(4) Retune test oscillator and receiver to 345 kilocycles and retrim condensers C13B, C15 and C14.

(5) Calibration and sensitivity of this band should also be checked at 150 kilocycles, 172.5 kilocycles and 345 kilocycles.

D. Alignment of Band No. 3

(1) Replace the 150 mmf. condenser dummy antenna with a 400 ohm non-inductive resister dummy antenna.

(2) Turn the band selector switch to the No. 3 Band position (green section of the dial).

(3) Tune test oscillator and receiver to a frequency of 3 megacycles (3000 kilocycles) and adjust condensers C10A, C8A and C4A.

(4) Tune test oscillator and receiver to a frequency of 1.7 megacycles (1700 kilocycles) and adjust condenser C12A.

(5) Retune test oscillator and receiver to 3 megacycles and check the adjustment of the condensers C10A, C8A and C4A.

(6) Calibration and sensitivity of this band should also be checked at 1.7 megacycles and 3 megacycles.

E. Alignment of Band No. 4

(1) Turn the band selector switch to the No. 4 Band position (red section of the dial).

(2) Tune test oscillator and receiver to a frequency of 7.2 megacycles and adjust condensers C8A, C7B and C5B.

(3) Tune test oscillator and receiver to a frequency of 3.6 megacycles and adjust condenser C11B.

(4) Retune test oscillator and receiver to 7.2 megacycles and re-adjust condensers C8A, C7B and C5B.

(5) Calibration and sensitivity of this band should also be checked at 7.2 megacycles, 6 megacycles and 3.6 megacycles.

Warning: Extreme care must be taken when adjusting condenser C11B in order that adjustment is not made to the image of the signal rather than the fundamental. The image signal is equal to the fundamental minus twice the intermediate-frequency of the receiver. A set that is adjusted to the image frequency instead of the fundamental may be detected by tuning over the band and checking the sensitivity at various points. If a dead spot appears near the center of the band, the adjustable condensers for that band have probably been adjusted to the image instead of the fundamental.

This type of mis-alignment may also be detected by tuning the test oscillator to a frequency of 6 megacycles and the station selector to approximately 6900 kilocycles. If a strong signal is found approximately at this frequency, it indicates that the band has been adjusted to the image frequency. The normal image frequency for 6000 kilocycles would be 6000 kilocycles minus twice 456 kilocycles or approximately 5100 kilocycles. Therefore, a signal of this frequency may be found with a test oscillator generating a 6000 kilocycle signal.

F. Alignment of Band No. 5

(1) Turn the band selector switch to the last short wave band (No. 5 Band position).

(2) Tune test oscillator and receiver to a frequency of 18 megacycles and adjust condensers C10B, C9B and C6B.

(3) Tune test oscillator and receiver to a frequency of 9 megacycles and adjust condenser C11A.

(4) Retune test oscillator and receiver to 18 megacycles and re-check the adjustment of condensers C10B, C9B and C6B.

(5) Calibration and sensitivity of this band should also be checked at 9 megacycles, 12 megacycles and 18 megacycles.

Warning: This band, like Band No. 4, may easily be aligned to the image frequency instead of the fundamental. This may be checked by tuning the test oscillator to a frequency of 15 megacycles and the station selector to approximately 15900 kilocycles. If a strong signal is found approximately at this frequency, it indicates that the band has been adjusted to the image frequency. The normal frequency for 15 megacycles would be 15,000 kilocycles minus twice 456 kilocycles or approximately 14,100 kilocycles. Therefore, the signal of this frequency may be found with a test oscillator generating a 15 megacycle signal.

DIAGRAM OF CABLE CONNECTIONS
MODELS 1486 AND 1476

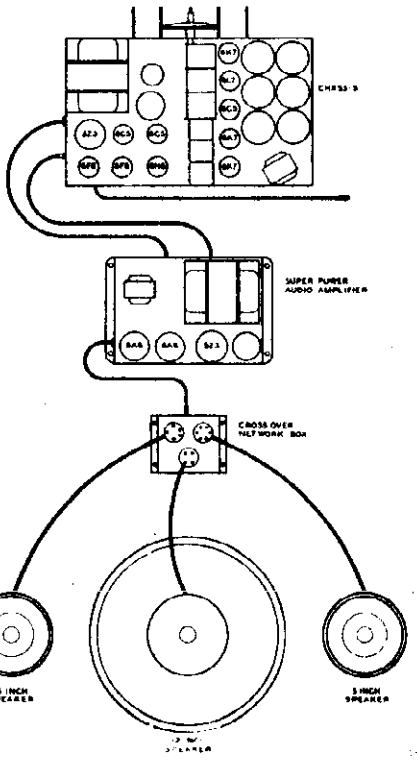

WIRING DIAGRAM FOR PHONOGRAPH PICKUP

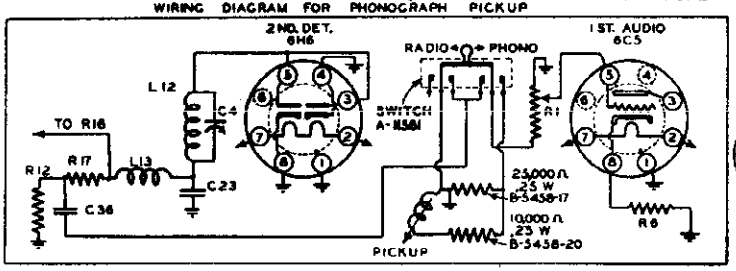

For Phonograph Mechanism of MODELS 1166-XP, 1166-XS, 1176-XS & 1176-XP, see MODELS 85-X.105-

©John F. Rider, Publisher

MODELS 1466,1476
Schematic,Parts

SPARKS WITHINGTON CO.

SCHEMATIC DIAGRAM
SPARTON SUPERHETERODYNE MODELS 1466 AND 1476
INTERMEDIATE FREQUENCY 456 K.C.
TOP VIEWS OF ALL SOCKET CONNECTIONS
November 15, 1935

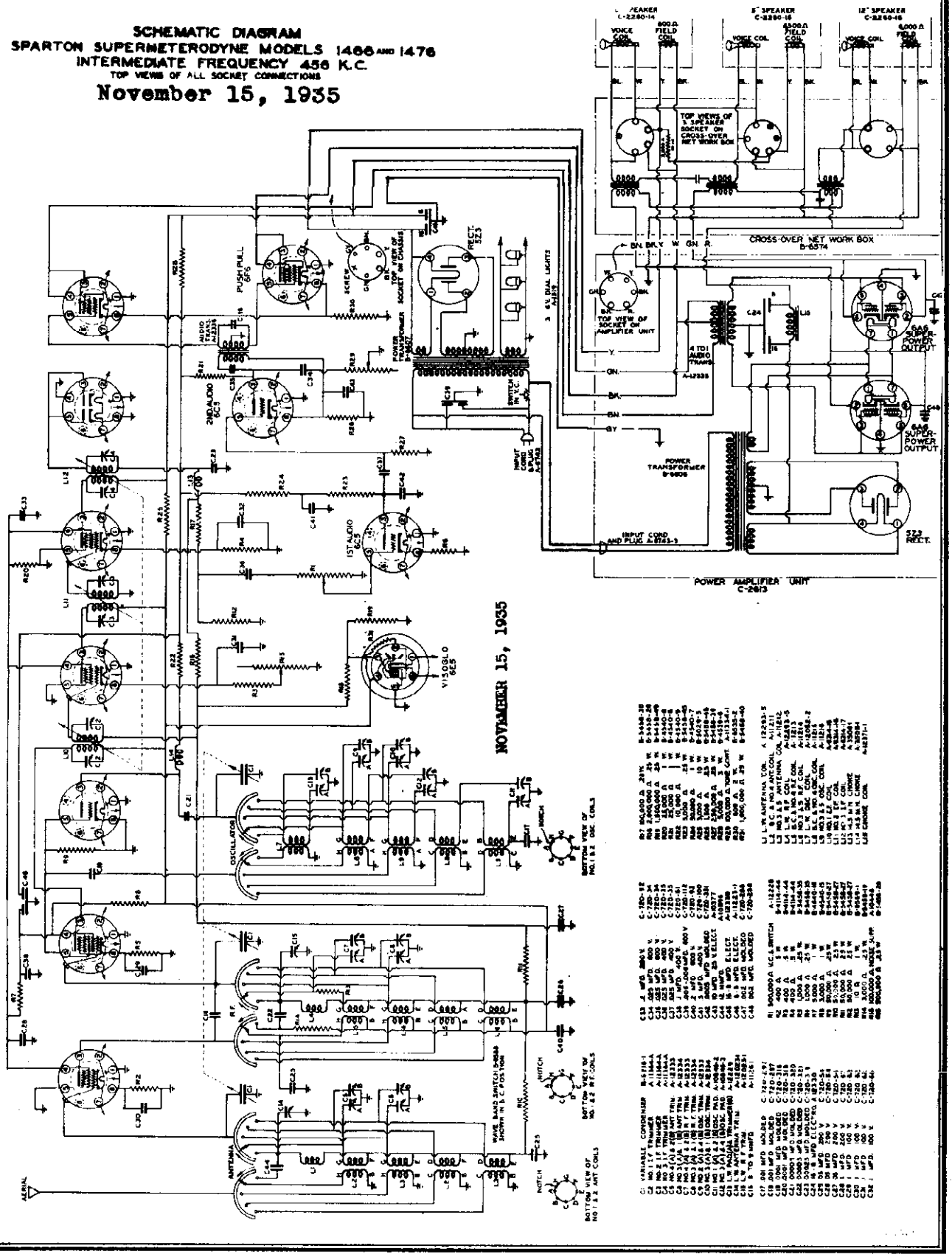

©John F. Rider, Publisher

©John F. Rider. Publisher

MODELS 1281D to 1289D
Chassis R-128D
Schematic, Socket
Parts

STEWART-WARNER CORP.

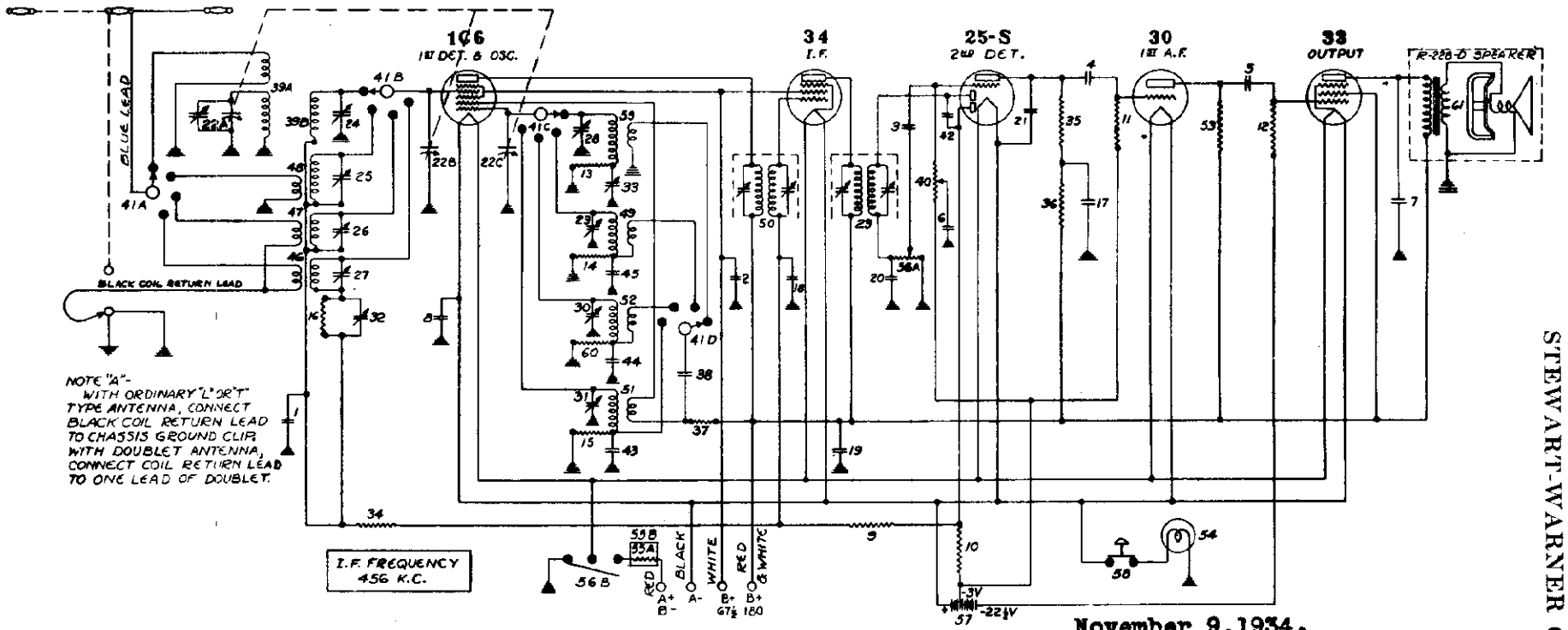

November 9,1934.

TUBE LOCATIONS

FRONT OF SET

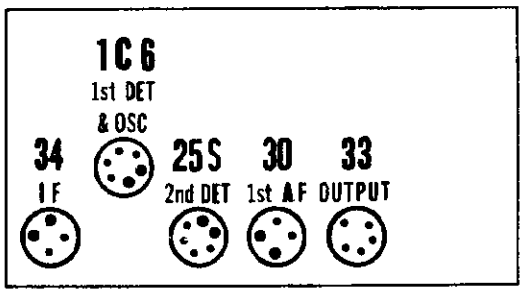

DIAG. NO.	PART NO.	DESCRIPTION	LIST PRICE
22	84186	Padding Trimmer (300-600 mmfd.)	$ .50
34	84196	110,000 ohm, 1/4 watt carbon resistor	.20
38	84198	130,000 ohm, 1/4 watt carbon resistor	.20
36	84198	110,000 ohm, 1/4 watt carbon resistor	.20
37	84199	16,000 ohm, 1/4 watt carbon resistor	.20
38	84200	.006 mfd. molded mica condenser. 500 volts	.80
38A			
38B	84229	Broadcast Pre-Selector Coil Assembly	1.00
40	84366	300,000 ohm, variable Tone Control resistor	.80
41A			
41B	84369	Range Switch	1.80
41C			
41D			
42	84370	.00011 mfd. molded mica condenser. 500 volt	.15
43	84371	.0008 mfd. molded mica condenser. 500 volt	.20
44	84372	.006 mfd. molded mica condenser. 500 volt	.80
45	84373	.0015 mfd. molded mica condenser. 500 volt	.25
46	84377	#4 band antenna coil	.90
47	84381	#3 band antenna coil (substitute #84734)	
48	84388	#2 band antenna coil	.55
49	84387	#2 band oscillator coil	.65
50	84511	1st. I. F. Transformer	1.75
51	84512	#4 band oscillator coil	1.00
52	84513	#3 band oscillator coil	.65
53	84514	51,000 ohm 1/2 watt carbon resistor	.30
54	84515	Dial light bulb (2.0 volts, .06 amp)	.25
55A	84527	Manganin Resistance wire S-1/2".	.02
56A		(500,000 ohm volume control)	
56B	84528	(on-off switch) In one unit	1.25
57	84529	22-1/2 volt tapped C battery	
58	84532	Dial light push button switch	1.00
59	84542	Broadcast oscillator coil	.75
60	84552	26,000 ohm, 1/4 watt carbon resistor	.20
47	84734	#3 band antenna coil	.75
61	R-228-D	P.M. Speaker and Output Transformer	12.00

DIAG. NO.	PART NO.	DESCRIPTION	LIST PRICE
55B	67035	Tubing for 84527. 4-3/8"	$ .06
1	81530	.1 mfd. 100 volt tubular paper condenser	.30
2	81530	.1 mfd. 100 volt tubular paper condenser	.30
3	83007	.02 mfd. 600 volt tubular paper condenser	.35
4	83007	.02 mfd. 600 volt tubular paper condenser	.35
5	83007	.02 mfd. 600 volt tubular paper condenser	.35
	83011	.004 mfd. 600 volt tubular paper condenser	.30
	83011	.004 mfd. 600 volt tubular paper condenser	.30
8	83053	.5 mfd. 100 volt tubular paper condenser	.45
9	83072	510,000 ohm, 1/4 watt carbon resistor	.20
10	83072	510,000 ohm, 1/4 watt carbon resistor	.20
11	83072	510,000 ohm, 1/4 watt carbon resistor	.20
12	83072	510,000 ohm, 1/4 watt carbon resistor	.20
13	83080	51,000 ohm, 1/4 watt carbon resistor	.20
14	83080	51,000 ohm, 1/4 watt carbon resistor	.20
15	83080	51,000 ohm, 1/4 watt carbon resistor	.20
16	83082	260,000 ohm, 1/4 watt carbon resistor	.20
17	83214	.25 mfd. 250 volt tubular paper condenser	.30
18	83353	.06 mfd. 100 volt tubular paper condenser	.30
19	83429	.5 mfd. 300 volt tubular paper condenser	.65
20	83559	.000025 mfd. molded mica condenser. 500 volt	.25
21	83559	.000025 mfd. molded mica condenser. 500 volt	.25
22A			
22B	84174	3 gang variable condenser	4.00
22C			
23	84198	2nd I. F. Transformer	1.75
24	84194	R. F. Trimmer condenser (3 to 23mmfd.)	.15
25	84194	R. F. Trimmer condenser (3 to 23mmfd.)	.15
26	84194	R. F. Trimmer condenser (3 to 23mmfd.)	.15
27	84194	R. F. Trimmer condenser (3 to 23mmfd.)	.15
28	84194	R. F. Trimmer condenser (3 to 23mmfd.)	.15
29	84194	R. F. Trimmer condenser (3 to 23mmfd.)	.15
30	84194	R. F. Trimmer condenser (3 to 23mmfd.)	.15
31	84194	R. F. Trimmer condenser (3 to 23mmfd.)	.15
32	84195	Padding Trimmer (500-600 mmfd.)	.60

VALUES ARE SUBJECT TO CHANGE WITHOUT NOTICE

Form 6559 Printed in U.S.A.

MODELS 1281D to 1289D
Chassis R-128D
Trimmers, Alignment

STEWART-WARNER CORP.

CONNECT SIGNAL GENERATOR TO	SIGNAL GENERATOR FREQUENCY	RECEIVER DIAL TUNED TO	RECEIVER WAVE BAND SWITCH AT	PADDER NO.	OUTPUT SIGNAL
1C6	456 KC	Broadcast	Broadcast	1	Max.
	"		"	2	Max.
	"		"	3	Max.
	"		"	4	Max.
		53[1]	"		
Antenna[2]	1400 KC	140	"	5	Max.
	"	"	"	6[3]	Max.
	"	"	"	7	Max.
	600 KC	60	"	8	Max. (Rock)
	4000 KC	4.0 mc.	1st SW	9[4]	Max.
	"	3.1 mc.[5]	"		
	"	4.0 mc.	"	10	Max.[6]
	"	3.1 mc.[6]			
	12000 KC	12.0 mc.	2nd SW	11[7]	Max.
	"	11.1 mc.[8]			
	"	12.0 mc.		12	
	"	11.1 mc.[9]			
	20000 KC	20.0 mc.	3rd SW	13	Max.
	"	"	"	14	Max.
	12000 KC	12.0 mc.	"	15	Max. (rock)

1. This checks dial position. Mesh condenser fully. Push condenser rotar with fingers to full mesh. Dial should read 53.
2. Connect 400 ohm 1 watt resistor in series with signal generator lead to antenna.
3. Retune receiver and again readjust trimmers 6 and 7.
4. If there are two peaks -- the correct one is with the trimmer farthest out.
5. This is image signal. If trimmer 9 is correctly adjusted image will be heard. If not heard, repeat 4000 kc. adjustment.
6. This is image signal test. If signal is as strong or stronger than previous 4.0 mc. signal, trimmer 10 is not correctly adjusted. 3.1 mc. signal should be much weaker than 4.0 mc. signal when adjusting trimmer #10.
7. Two peaks possible. Correctly setting is with trimmer farthest out.
8. Image signal test. See item 5 except that test applies to adjustment of trimmer 11.
9. This is test similar to item #6 -- except that trimmer is #12.

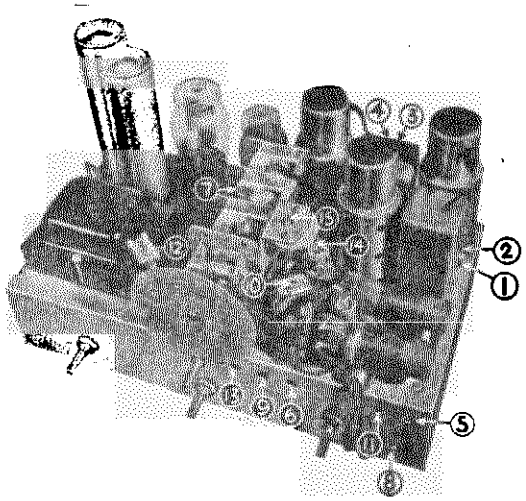

*NOTE: This cut shows the R-127 A.C. operated chassis. Trimmer condensor locations are the same on the R-128-D with the exception of the 1st. I.F. trimmers. In the R-128-D the 1st I. F. is contained in a cylindrical can with the trimmers at the top.

On the R-128-D there are no electrolytic condensers and the "C" battery is mounted in the approximate position of the R-127 power transformer.

©John F. Rider, Publisher

STEWART-WARNER CORP.

MODELS 1341 to 1349
Chassis R-134
Final schematic note
Trimmers, Alignment

The temporary schematic is the same as the final, except that the fixed condenser that is shunted across the Broadcast Osc. coil (upper coil in No.38) has a value of 11 mmf. The resistance of the speaker field (#11) is 1300 ohms warm.

ALIGNING EQUIPMENT

For the proper alignment of this receiver, an output meter and a high grade modulated service oscillator are essential.

The oscillator should be capable of generating the frequencies of 456 KC., 600 KC., 1400 KC. and a short-wave range extending to 6000 KC. The test oscillator calibration should be checked, using broadcast station signals as standards.

In order that alignment may be carried out without actuating the A.V.C. of the receiver, it must be possible to reduce the output of the test oscillator to a very low value.

For trimmer adjustment, it is advisable to use an all-bakelite screw driver, although one with a small metal tip may be used.

ALIGNING PROCEDURE

The step by step routine given below should be carefully followed. The trimmer numbers referred to are shown in the illustration.

ALIGNING THE I. F. CIRCUIT

1. (a) Connect the output meter across the primary of the output transformer (red and yellow lead terminals on the speaker terminal strip.)

(b) Turn the receiver volume control to maximum volume position.

(Note: The volume control should be kept in this position throughout the entire alignment procedure.) Ground the antenna lead to the chassis.

(c) Adjust the test oscillator to exactly 456 KC. and connect its output to the modulator grid of the 6A7 tube and the chassis.

(d) Adjust all four I.F. trimmers (trimmer groups 1 and 2) for maximum output as indicated on the output meter. Adjust the test oscillator output to give about one half full-scale deflection on the output meter.

(e) Repeat all four adjustments since the changing of each I.F. trimmer affects the others to a certain extent, thus necessitating readjustment.

BROADCAST RANGE CALIBRATION

If the set should require calibration, proceed as follows:

2. (a) Turn the gang condenser to full mesh and check to see that the dial pointer indicates 540 KC. If not, remove the dial glass and turn the pointer to the correct position.

(b) Turn the range switch to the clockwise position.

(c) Connect a 400 or 500 ohm carbon resistor in series with the test oscillator output and the receiver antenna terminal, and connect the oscillator ground lead to the chassis.

(d) Adjust the test oscillator to 1400 KC.

(e) Turn the receiver dial pointer to indicate 1400 KC. on the dial.

(f) Adjust trimmer No. 3 (broadcast oscillator shunt trimmer) for maximum output without changing the setting of the main condenser. Maintain the level of the test oscillator output at a value which gives about one half full-scale deflection on the output meter.

BROADCAST RANGE ALIGNMENT

3. (a) Adjust the test oscillator to 1400 KC. and tune the receiver for maximum output.

(b) Adjust trimmers No. 4 and 5 (broadcast detector and antenna shunt trimmers respectively) for maximum output.

4. (a) Adjust the test oscillator to 600 KC. and tune the receiver to the signal.

(b) Adjust trimmer No. 6 (broadcast oscillator series padder) for maximum output.

(c) Retune the condenser gang to a peak and readjust trimmer No. 6 for maximum output.

(d) Continue to readjust trimmer No. 6 and retune until maximum output is obtained.

SHORT WAVE RANGE CALIBRATION

5. (a) Turn the receiver range switch to the counter-clockwise position.

(b) Adjust the test oscillator output to 6 MC.

(c) Turn the receiver dial pointer to indicate 6 MC. on the dial.

(d) Adjust trimmer No. 7 (short wave oscillator shunt trimmer) for maximum output.

(e) To check for possible adjustment of the receiver to the image frequency, turn the dial pointer to approximately 5.1 megacycles where a repeat signal should be heard. If no response is received here even with greatly increased test oscillator output, retune the dial pointer to 6 MC. and readjust trimmer No. 7 to a peak, with the trimmer screw farther out.

SHORT WAVE RANGE ALIGNMENT

1. Adjust the test oscillator to 6 MC. and carefully tune the receiver to the signal.

2. Adjust trimmers No. 8 and 9 (short wave detector and antenna shunt trimmers respectively) for maximum output.

©John F. Rider, Publisher

Stewart Warner R-136 Chassis Alignment

Connect the output indicator across the primary of the output transformer (red and yellow wires on the speaker terminal strip) located under the speaker field cover.

I-f. Alignment:

Turn volume control to maximum and keep it there for entire alignment procedure. Set test oscillator to 456 kc., the i-f. peak, and connect to the 6A8 control grid and the chassis. Adjust the four i-f. trimmers (shown at 1 and 2 on the chassis layout on *page 6-18 of Rider's Volume VI*) for maximum output deflection. Recheck the adjustments.

Broadcast Band Calibration:

Check position of dial pointer on shaft by turning the rotor plates to full mesh. The pointer should indicate 540 kc. Turn the range switch to extreme clockwise position. Connect the output of the test oscillator to the set's A and G terminals and ground both set and oscillator. Aqjust test oscillator and dial to 1400 kc. Adjust trimmer No. 3 for maximum output without changing the setting of the condenser gang.

Broadcast Band Alignment:

Connect a 500-ohm carbon resistor in series with the test oscillator output and the set's antenna terminal and let it remain connected for the rest of the adjustments that are outlined below. Set oscillator at 1400 kc. and tune the receiver to the signal for maximum output. Adjust trimmers Nos. 4 and 5 for maximum output. Do not touch trimmer No. 3 as this will change calibration.

Adjust test oscillator to 600 kc. and tune set to this signal. Adjust trimmer No. 6 for maximum output. Retune gang condenser to a peak and readjust trimmer No. 6 for maximum output. Continue to do this until maximum output is obtained.

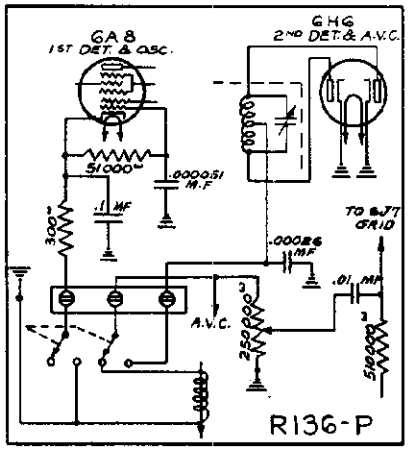

Schematic diagram of the Stewart Warner R-136-P chassis with phonograph pickup indicated.

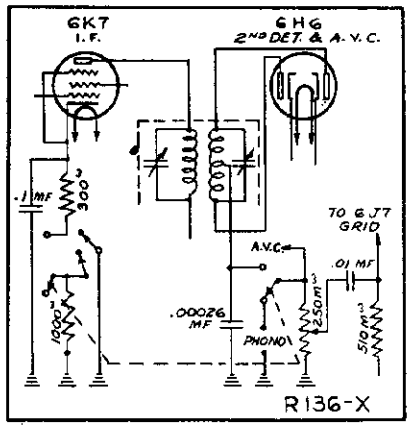

The phonograph connections for the Stewart Warner chassis R-136-X.

First S-W. Band Calibration:

Turn range switch to center position. Adjust test oscillator to 5.5 mc. and set the set's dial to the same frequency. Adjust trimmer No. 7 for maximum output. If there are two peaks, the proper one is that with the trimmer screw farthest out.

First S-W. Band Alignment:

Set test oscillator to 5.5 mc. and tune receiver to maximum output. Adjust trimmers Nos. 8 and 9 for maximum output.

Second S-W. Band Calibration:

Be certain that the D to G connector on the receiver terminal strip is in place. Turn the range switch to the extreme counter-clockwise position. Adjust test oscillator to 16 mc. and the dial of the set to the same frequency.

Adjust trimmer No. 10 for maximum output. Check this by tuning the receiver to about 15.1 mc. If a repeat signal is not heard at this point, even with increased test oscillator output, retune the receiver to 16 mc. and adjust trimmer No. 10 to the proper peak with the screw farther out.

Second S-W. Band Alignment:

Adjust test oscillator to 16 mc. and tune set for maximum output. Adjust trimmers Nos. 11 and 12 for maximum output. Check to see if these trimmers are adjusted to the proper signal rather than the image, by tuning the set to approximately 15.1 mc. If the repeat signal is equal to or stronger than that at 16 mc., retune to 16 mc. and readjust Nos. 11 and 12 to the proper peak with the trimmer screws further in.

On *page 6-18 of Rider's Volume VI* appeared the temporary schematic of this chassis, which is used in Models 1361 to 1369 inclusive. The final diagram has now been released with the following changes:

Condenser No. 8, connected between the arm of the tone control and ground, was 0.015 mf. and is now 0.006 mf. The resistance of the tone control, No. 20, is 500,000 ohms.

Condenser No. 9, connected from the plate of the 6J7 to ground, has been changed from 0.00026 mf. to 0.00011 mf.

The left portion of tapped resistor No. 18 is 275 ohms and the right-hand part, that connected to ground, is 25 ohms.

The resistance of the volume control is 250,000 ohms. This is part No. 19A.

The notation was omitted from the diagram of voltages that the grid bias on the 6J7 tube is—1.7 volts, measured across the 25-ohm portion of resistor No. 18.

The resistance of the speaker field is 1300 ohms with the coil warm.

Final Schematic Note
Alignment, Changes
Chassis R-136GP, R-136X
Phonograph Circuits

©John F. Rider, Publisher

Alignment
Chassis R137-P, R-137-X
Phonograph Circuits

STEWART-WARNER CORP.

MODELS 1371 to 1379
Chassis R-137
Final schematic note

The temporary schematic is the same as the final, except for the identification of the following condensers:
The fixed condenser shunting Osc. Coil 35 has a value of 0.000026 mf.
The fixed condenser shunting Osc. Coil 29 has a value of 0.000011 mf.
The resistance of the speaker field (#53) is 430 ohms, warm.

CALIBRATION AND ALIGNMENT

The following procedure on the proper adjustment of the various trimmers is divided into two classifications, calibration and alignment. Calibration is the adjustment of certain trimmers so that the radio signals can be received at the proper dial settings. Calibration of the R-137 is made at the high-frequency end of the dial. Alignment is the adjustment of trimmers so that the antenna and detector circuits are tuned to give maximum sensitivity and selectivity.

The R. F. calibration and alignment of each band is independent of all others, so that one band may be re-calibrated or re-aligned without affecting the trimmer adjustments on any of the other bands.

ALIGNMENT OF THE I. F. AMPLIFIER

1. (a) Turn the volume control to maximum volume position and keep it in this position throughout the entire alignment procedure.
(b) Connect the test oscillator output leads to the 6A8 control grid and the chassis, and set the test oscillator to exactly 456 KC. Adjust the output of the test oscillator to give about half of full scale deflection on the output meter.
(c) Adjust the four I. F. transformer trimmers (trimmer groups 1 and 2) for maximum output meter deflection.
(d) Repeat the four trimmer adjustments, since the adjustment of each trimmer has some effect on the others.

BAND NO. 1 (LONG WAVE) CALIBRATION

2. (a) Check the position of the dial pointer on its shaft by turning the rotor plates of the gang condenser to full mesh. The upper dial pointer should then coincide with the 540 KC. mark on the broadcast band scale. If it does not, hold the dial gear and turn the pointer to the correct position.
(b) Turn the range switch control to the extreme right position. (Clockwise)
(c) **Connect a 400 or 500 ohm carbon resistor in series with the test oscillator output and the receiver antenna terminal (Note: This resistor should remain connected for all subsequent adjustments).**
(d) Ground the receiver.
(e) Adjust the test oscillator to exactly 360 KC.
(f) Turn the receiver dial pointer to 360 KC. on the tuning dial.
(g) Adjust trimmer No. 3 for maximum output without changing the setting of the condenser gang.

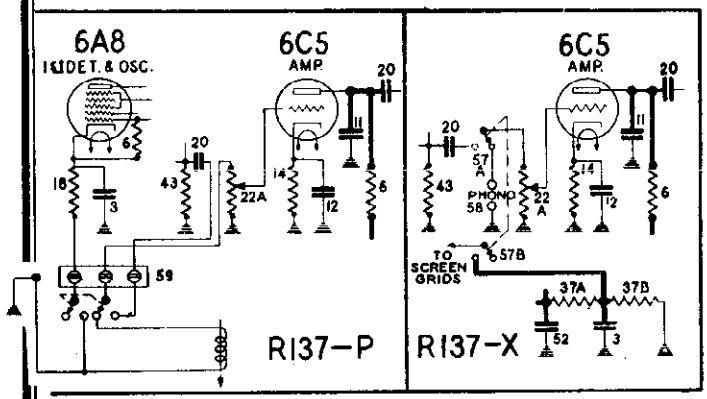

PHONOGRAPH MODEL CIRCUITS

BAND NO. 1 (LONG WAVE) ALIGNMENT

3. (a) With the test oscillator set at 360 KC., tune the receiver to the signal for maximum output.
(b) Adjust trimmers No. 4 and No. 5 for maximum output. Do not touch trimmer No. 3 as this will change the calibration.
4. (a) Set the test oscillator to 180 KC. and tune the receiver to this signal.
(b) Adjust trimmer No. 6 for maximum output.
(c) Retune the set to get maximum output, and readjust trimmer No. 6 for maximum output. Continue to readjust trimmer No. 6 and retune until maximum output is obtained.

BAND NO. 2 (BROADCAST) CALIBRATION

5. (a) Turn the range switch control to the position second from the right.
(b) Adjust the test oscillator to exactly 1400 KC.
(c) Turn the receiver dial pointer to 1400 KC. on the tuning dial.
(d) Adjust trimmer No. 7 for maximum output without changing the setting of the condenser gang.

BAND NO. 2 (BROADCAST) ALIGNMENT

6. (a) With the test oscillator set at 1400 KC. tune the receiver to the signal for maximum output.
(b) Adjust trimmers No. 8 and 9 for maximum output. Do not touch trimmer No. 7 as this will change the calibration.
7. (a) Adjust the test oscillator to 600 KC. and tune the receiver to this signal.
(b) Adjust trimmer No. 10 for maximum output.
(c) Retune the set and readjust trimmer No. 10 for maximum output. Continue to readjust trimmer No. 10 and retune until maximum output is obtained.

BAND NO. 3 CALIBRATION

8. (a) Turn the range switch control to the position third from the right.
(b) Adjust the test oscillator to 5.5 MC.
(c) Turn the receiver dial pointer to 5.5 MC. on the tuning dial.
(d) Adjust trimmer No. 11 for maximum output. If there are two peaks the proper one is that with the trimmer screw farthest out.

BAND NO. 3 ALIGNMENT

9. (a) With the test oscillator set at 5.5 megacycles, tune the receiver for maximum output.
(b) Adjust trimmers No. 12 and 13 for maximum output.

BAND NO. 4 CALIBRATION

10. (a) Be sure the D to G connector on the receiver terminal strip is in place.
(b) Turn the range switch control to the extreme left (counter-clockwise).
(c) Adjust the test oscillator to 16 MC.
(d) Turn the receiver dial pointer to 16 MC. on the tuning dial.
(e) Adjust trimmer No. 14 for maximum output. Check to see that it has been adjusted to the proper peak, by tuning the receiver to approximately 15.1 MC. If a repeat signal is not heard at this point, even with greatly increased oscillator output, retune the receiver to 16 MC. and adjust trimmer No. 14 to the proper peak with the trimmer screw farther out.

BAND NO. 4 ALIGNMENT

11. (a) Adjust the test oscillator to 16 MC.
(b) Tune the receiver for maximum output.
(c) Adjust trimmers No. 15 and 16 for maximum output.

R-137-X & R-137-P PARTS

57A & B	84404	Phonograph toggle switch (D.P.D.T.) (137-X only)	1.10
58	84407	Phonograph terminal strip (137-X only)	.12
59	84412	Three-lug terminal strip (137-P only)	.03
	85764	40 mfd. 100 volt electrolytic condenser	2.00
	85835	Power transformer (100 to 210 volts, 25 to 133 cycles)	12.50

MODELS 1381 to 1389
Chassis R-138
Final schematic note
Alignment

STEWART-WARNER CORP.

Chassis R-138P, R-138X
Phonograph Circuits

CALIBRATION AND ALIGNMENT

The following procedure on the proper adjustment of the various trimmers is divided into two classifications, calibration and alignment. Calibration is the adjustment of certain trimmers so that the radio signals can be received at the proper dial settings. Calibration of the R-138 is made at the high-frequency end of the dial. Alignment is the adjustment of trimmers so that the antenna and detector circuits are tuned to give maximum sensitivity and selectivity.

The R.F. calibration and alignment of each band is independent of all others, so that one band may be re-calibrated or re-aligned without affecting the trimmer adjustments on any of the other bands.

ALIGNMENT OF THE I. F. AMPLIFIER

1. (a) Turn the volume control to maximum volume position and keep it in this position throughout the entire alignment procedure.

(b) Connect the test oscillator output leads to the 6A8 control grid and the chassis, and set the test oscillator to exactly 456 KC. Adjust the output of the test oscillator to give about half of full scale deflection on the output meter.

(c) Adjust the six I. F. transformer trimmers (trimmer groups 1, 2 and 3) for maximum output meter deflection.

(d) Repeat the six trimmer adjustments, since the adjustment of each trimmer has some effect on the others.

BAND NO. 1 (LONG WAVE) CALIBRATION

2. (a) Check the position of the dial pointer on its shaft by turning the rotor plates of the gang condenser to full mesh. The upper dial pointer should then coincide with the 540 KC. mark on the broadcast band scale. If it does not, hold the dial gear and turn the pointer to the correct position.

(b) Turn the range switch control to the extreme right position. (Clockwise)

(c) Connect a 400 or 500 ohm carbon resistor in series with the test oscillator output and the receiver antenna terminal (Note: this resistor should remain connected for all subsequent adjustments).

(d) Ground the receiver.

(e) Adjust the test oscillator to exactly 360 KC.

(f) Turn the receiver dial pointer to 360 KC. on the tuning dial.

(g) Adjust trimmer No. 4 for maximum output without changing the setting of the condenser gang.

BAND NO. 1 (LONG WAVE) ALIGNMENT

3. (a) With the test oscillator set at 360 KC., tune the receiver to the signal for maximum output.

(b) Adjust trimmers No. 5 and No. 6 for maximum output. Do not touch trimmer No. 4 as this will change the calibration.

4. (a) Set the test oscillator to 180 KC. and tune the receiver to this signal.

(b) Adjust trimmer No. 7 for maximum output.

(c) Retune the set to get maximum output, and readjust trimmer No. 7 for maximum output. Continue to readjust trimmer No. 7 and retune until maximum output is obtained.

BAND NO. 2 (BROADCAST) CALIBRATION

5. (a) Turn the range switch control to the position second from the right.

(b) Adjust the test oscillator to exactly 1400 KC.

(c) Turn the receiver dial pointer to 1400 KC. on the tuning dial.

(d) Adjust trimmer No. 8 for maximum output without changing the setting of the condenser gang.

BAND NO. 2 (BROADCAST) ALIGNMENT

6. (a) With the test oscillator set at 1400 KC. tune the receiver to the signal for maximum output.

(b) Adjust trimmers No. 9 and 10 for maximum output. Do not touch trimmer No. 8 as this will change the calibration.

7. (a) Adjust the test oscillator to 600 KC. and tune the receiver to this signal.

(b) Adjust trimmer No. 11 for maximum output.

(c) Retune the set and readjust trimmer No. 11 for maximum output. Continue to readjust trimmer No. 11 and retune until maximum output is obtained.

BAND NO. 3 CALIBRATION

8. (a) Turn the range switch control to the position third from the right.

(b) Adjust the test oscillator to 5.5 MC.

(c) Turn the receiver dial pointer to 5.5 MC. on the tuning dial.

(d) Adjust trimmer No. 12 for maximum output. If there are two peaks the proper one is that with the trimmer screw farthest out.

BAND NO. 3 ALIGNMENT

9. (a) With the test oscillator set at 5.5 MC., tune the receiver for maximum output.

(b) Adjust trimmers No. 13 and 14 for maximum output.

BAND NO. 4 CALIBRATION

10. (a) Be sure the D to G connector on the antenna terminal strip is in place.

(b) Turn the range switch control to the extreme left (counter-clockwise).

(c) Adjust the test oscillator to 16 MC.

(d) Turn the receiver dial pointer to 16 MC. on the tuning dial.

(e) Adjust trimmer No. 15 for maximum output. Check to see that it has been adjusted to the proper peak, by tuning the receiver to approximately 15.1 MC. If a repeat signal is not heard at this point, even with greatly increased oscillator output, retune the receiver to 16 MC. and adjust trimmer No. 15 to the proper peak with the trimmer screw farther out.

BAND NO. 4 ALIGNMENT

11. (a) Adjust the test oscillator to 16 MC.

(b) Tune the receiver for maximum output.

(c) Adjust trimmers No. 16 and 17 for maximum output.

The temporary schematic is the same as the final, except for the identification of the following condensers:

The fixed condenser shunting Osc.Coil 36 has a value of 0.000026 mf.

The fixed condenser shunting Osc.Coil 30 has a value of 0.000011 mf.

The resistance of the speaker field(59) is 430 ohms warm.

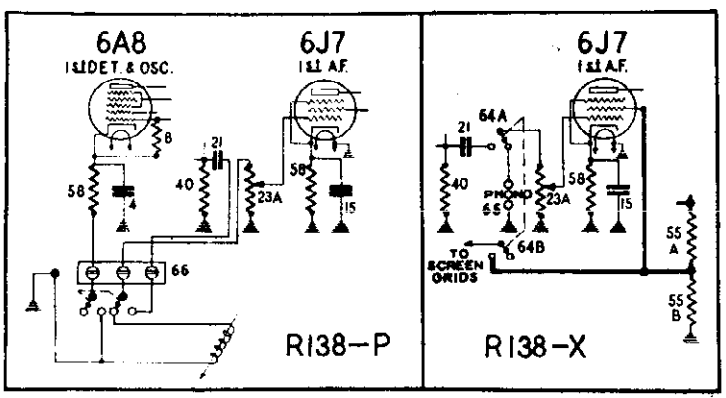

PHONOGRAPH MODEL CIRCUITS

R-138-X and R-138-P PARTS

64A&B	84404	Phonograph toggle switch (D.P.D.T.) (138X only)	1.10
65	84407	Phonograph terminal strip (138X only)	.12
66	84412	3 lug terminal strip (138P only)	.03
	85764	40 mfd. 100 volt electrolytic condenser	2.00
	85768	4 mfd. 150 volt electrolytic condenser	1.50
	87835	Power transformer (100 to 240 volts, 25 to 133 cycles)	12.50

©John F. Rider, Publisher

STEWART WARNER CORP.

MODELS 1391D to 1399D
Chassis R-139D
Schematic, Socket, Data
Alignment, Parts

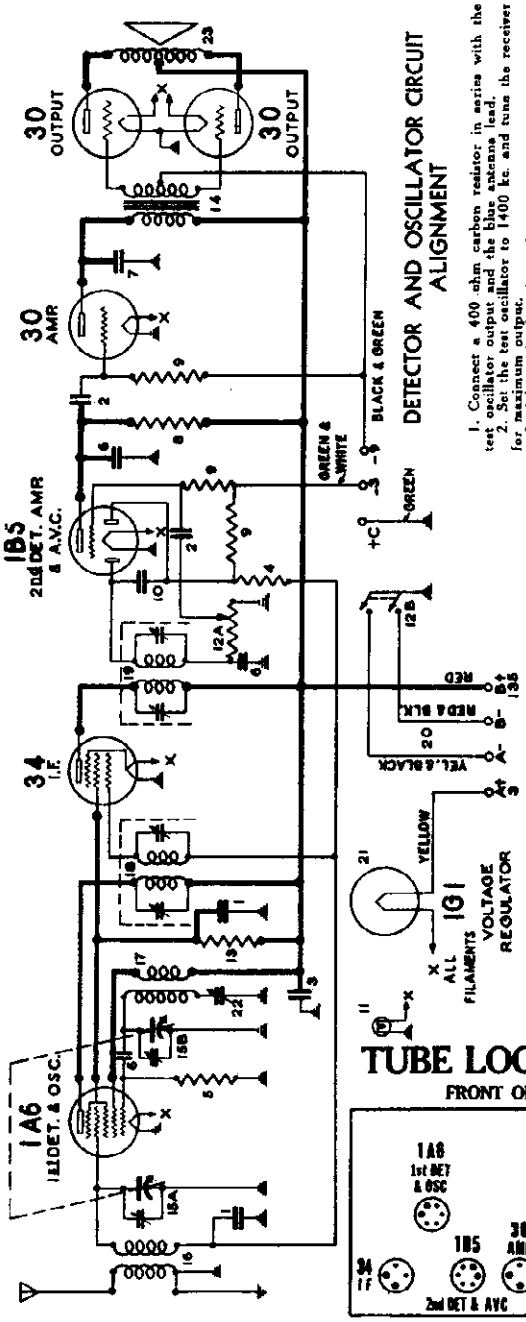

DETECTOR AND OSCILLATOR CIRCUIT ALIGNMENT

1. Connect a 400 ohm carbon resistor in series with the test oscillator output and the blue antenna lead.
2. Set the test oscillator to 1400 kc. and tune the receiver for maximum output.
3. Adjust the broadcast detector shunt trimmer which is located on the top of the section of the condenser gang second from the front, for maximum output.
4. Set the test oscillator to 600 kc. and tune the receiver to the signal.
5. Adjust the oscillator padding trimmer, which is located in the front lower right-hand corner of the chassis, for maximum output.
6. Retune the condenser gang to a peak and readjust the padding trimmer for maximum output.
7. Keep on readjusting the padding trimmer and retuning until maximum output is obtained.

ALIGNING THE I. F. CIRCUIT

1. Turn the receiver volume control to maximum position. (Note: The volume control should be kept in this position throughout the entire alignment procedure.) Ground the antenna lead to the chassis.
2. Adjust the test oscillator to 456 kc. and connect its output to the modulator grid of the 1A6 and the chassis.
3. Adjust all four I. F. trimmers located at the top of the I. F. transformers, for maximum output as indicated on the output meter. Adjust the test oscillator output to give about one half full scale deflection on the output meter. For trimmer adjustment, it is advisable to use an all-bakelite screw driver. Although one with a small metal tip may be used.

No inward or sideward pressure should be applied to the alignment tool or the condenser may spring back to a different setting as soon as the tool is removed.

4. Go back and repeat all four adjustments since the changing of each I. F. trimmer affects the others to a certain extent, thus necessitating readjustment.

BATTERIES

Batteries required for operation consist of: 1. Either an Eveready air cell, a large 3 volt dry cell "A" pack, or a 2 volt storage battery. 2. Three 45 volt "B" batteries. 3. Two 4½ volt "C" batteries.

The function of the type 1G1 tube (No. 21 in the circuit diagram) is to regulate the voltage applied to the filaments of the various tubes and to maintain it at the proper value throughout the life of the "A" battery. This tube is especially designed to meet the requirements of the receiver.

If an ordinary 2 volt lead storage cell is used for "A" supply, it is necessary that the regulator tube be removed and the two large socket contacts connected together with a short length of wire.

The two 4½ volt "C" batteries are essential to the proper operation of the receiver and for good "B" battery life.

If so desired, a combination "B" and "C" battery "plug in" pack, such as the Burgess G-90-D6, may be used with the R-139-D chassis. The "B" and "C" pack will fit into the console cabinet only, however.

To use the R-139-D chassis with the "B" and "C" pack it is necessary that the regular battery cables be replaced with the special cables shown in the parts list and having the part numbers 85938 and 85939. These cables have the same color code as the regular cable and can be easily installed. When installing these cables, the green C+ lead is omitted since this connection is made inside the "B" and "C" unit.

NOTE: When a 2 volt storage cell is to be used for filament supply, remove the 1G1 voltage regulator and connect the large socket contacts with a short wire.

DIAL CALIBRATION

If the set should require calibration, proceed as follows:

1. Turn the gang condenser to full mesh and check to see that an indicator on a line directly above the control shaft indicates 540 kc. on the dial. If not, loosen the dial set screw and adjust the dial to the correct position.
2. Connect the test oscillator output to the receiver antenna lead and the chassis, and ground the chassis.
3. Adjust the test oscillator to 1400 kc.
4. Turn the receiver dial to 1400 kc.
5. Adjust the broadcast oscillator shunt trimmer located on the top of the gang condenser section closest to the front, for maximum output without changing the setting of the main condenser. Maintain the level of the test oscillator output at a value which gives about one half full scale deflection on the output meter.

TUBE LOCATIONS

FRONT OF SET

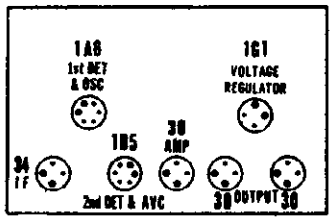

CIRCUIT DESCRIPTION

The R-139-D Battery Receiver is a seven tube superheterodyne with a tuning range from 540 to 1750 KC. which covers the broadcast and first police bands.

The R. F. signal picked up by the antenna is tuned and applied to the modulator grid of the type 1A6 tube, where frequency conversion to 456 KC. takes place. The 456 KC. signal is amplified in the I F. stage which employs a type 34 tube and is then passed on to the 1B5/25S combination second detector, amplifier and A. V. C. tube.

For A. V. C. action, a portion of the I. F. signal is passed from the second I. F. transformer secondary to one of the diode plates through a condenser (No. 10 in the diagram). Rectification takes place in the diode section and a D. C. potential is developed across the diode load resistor (No. 9 on the circuit diagram). This potential is applied through a resistance-capacity filter to the grid returns of the 1A6 and 34 tubes. A slight delay bias is obtained for the A.V.C. action by use of the diode plate which is closest to the positive leg of the filament.

Rectification of the signal takes place in the other diode section of the 1B5 tube also, and results in a modulated D. C. potential which develops across the volume control resistor (No. 12A in the circuit diagram). Any desired portion of the audio component of this voltage may then be applied to the grid of the triode section of the 1B5 where it is still further amplified. The triode is resistance coupled to the type 30 driver tube, which in turn is transformer coupled to two type 30 tubes operating in push-pull Class A prime.

I. F. FREQUENCY 456 KC.

R-139-D PARTS LIST

Diag. No.	Part No.	DESCRIPTION	List Price
1	81630	.1 mfd. 175 volt paper condenser	$0.30
2	83007	.02 mfd. 600 volt paper condenser	.35
3	83063	.5 mfd. 150 volt paper condenser	.45
4	83072	510,000 ohm ¼ W. carbon resistor	.15
5	83080	51,000 ohm ¼ W. carbon resistor	.20
6	83539	.00026 mfd. mica condenser	.25
7	83784	.0011 mfd. mica condenser	.22
8	84198	110,000 ohm ½ W. carbon resistor	.30
9	84235	1.1 megohm ½ W. carbon resistor	.20
10	84370	.00011 mfd. mica condenser	.15
11	84515	Dial lamp 2.0 volt .060 amp.	.25
12A, 12B	84528	{Volume control, 500,000 ohm; Line switch}	1.25
13	85116	25,000 ohm ½ W. carbon resistor	.15
14	85404	Push-pull input transformer	2.50
15A, 15B	85405	Two gang variable condenser	$4.00
16	85406	Antenna coil assembly	1.00
17	85408	Osc. coil assembly	.75
18	85409	1st I.F. transformer	2.50
19	85410	2nd I.F. transformer	2.50
20	85416	Battery cable	.60
21	85420	Voltage regulator tube	1.10
22	85505	Padding trimmer	.50
23	{R-234-D; R-235-D}	6" magnetic spkr. used on 1391 D; 8" magnetic spkr. used on 1395 D	5.75; 6.50
	85938	"A" battery cable 1395 D (special)	.30
	85939	"B" & "C" battery cable & plug 1395 D (special)	1.10

Prices subject to change without notice

©John F. Rider, Publisher

MODELS 1601 to 1609
Chassis R-160
Schematic, Voltage
Parts

STEWART-WARNER CORP.

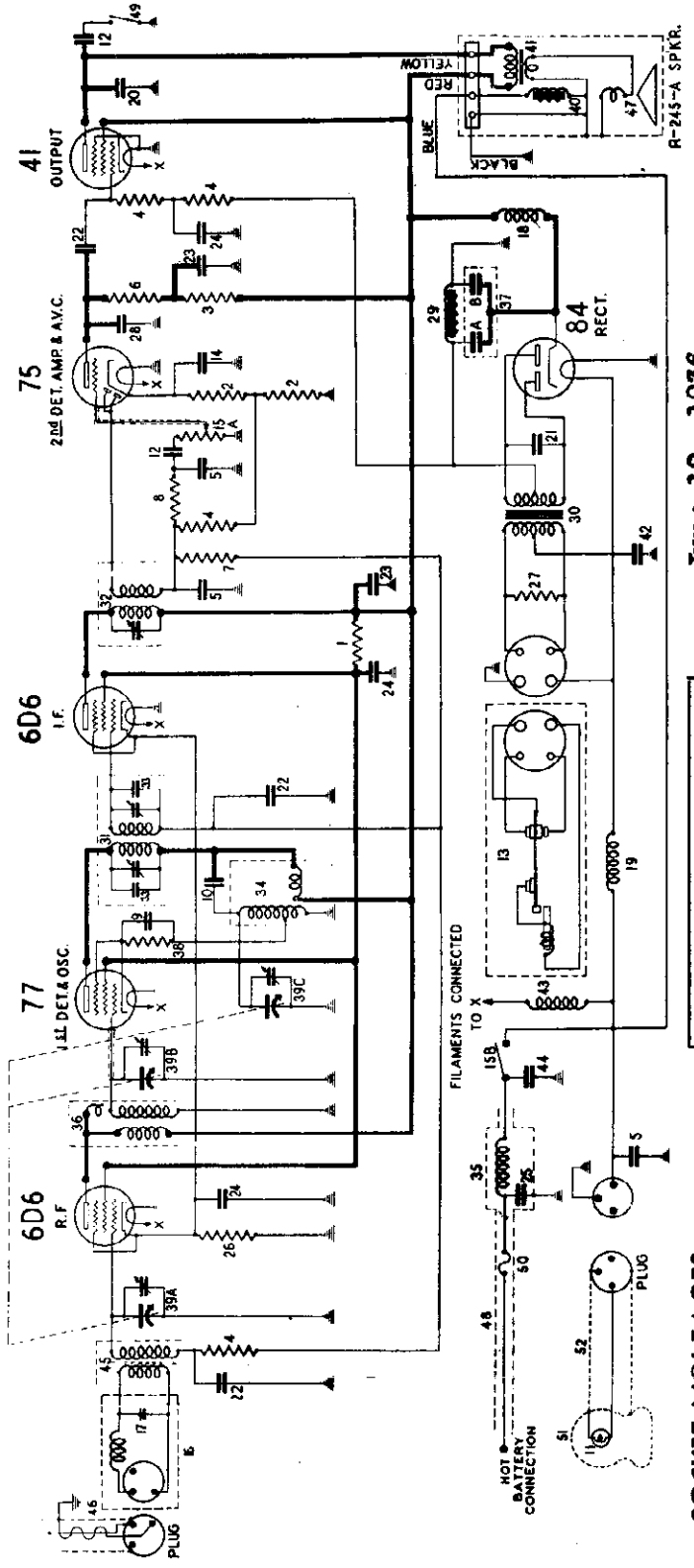

I.F. FREQUENCY 177.5 KC.

June 10, 1936.

R-1601 PARTS LIST

Diag. No.	Part No.	DESCRIPTION	List Price
1	66023	60,000 ohm 1 watt carbon resistor	$0.25
2	67303	2,000 ohm ½ watt carbon resistor	.25
3	83080	51,000 ohm ½ watt carbon resistor	.20
4	83082	260,000 ohm ¼ watt carbon resistor	.20
5	83539	260 mmfd. mica condenser	.25
6	83777	Battery cable and fuse housing	.50
7	84198	110,000 ohm ½ watt carbon resistor	.30
8	84253	1.1 megohm ½ watt carbon resistor	.20
9	84282	11,000 ohm ½ watt carbon resistor	.20
10	84833	.001 mfd. mica condenser	.25
11	85296	70 mmfd. mica condenser	.20
12	840266	Pilot lamp 6-8 volt (bayonet base)	.18
13	88054	.02 mfd. 400 volt paper condenser	.30
14	88151	Tone control switch	.30
15A	88171	Vibrator	3.50
15B	88170	10 mfd. 25 volt electrolytic condenser	.80
16	88172	Volume control 500,000 ohm	1.20
17	88173	Line switch	
18	88181	Antenna Filter	1.20
19	88183	50 mmfd. mica condenser	.20
20	88185	R. F. choke coil	.40
21	88187	R. F. choke coil (to vibrator)	.25
22	88189	.006 mfd. 600 volt paper condenser	.35
23	88191	.01 mfd. 1500 volt paper condenser	.40
24	88193	.05 mfd. 200 volt paper condenser	.35
25	88195	.1 mfd. 300 volt paper condenser	.35
26	88203	.25 mfd. 150 volt paper condenser	.35
27	88204	600 ohm ¼ watt carbon resistor	.15
28	88205	210 ohm ½ watt carbon resistor	.15
29	88210	.0021 mfd. mica condenser	.35
30	88213	Filter choke	1.25
31	88222	Power transformer	3.50
32	88223	1st I.F. transformer	2.75
33	88233	2nd I.F. transformer	2.60
34	88234	110 mmfd. mica condenser	.25
35	88239	Oscillator coil and shield assembly	1.50
36	88250	"A" filter	1.00
37A	88256	R.F. coil and shield assembly	1.50
37B		Electrolytic condenser 4 mfd. 350 volt	2.40
38	88257	Electrolytic condenser 8 mfd. 350 volt	
39A to C	88258	9,500 ohm ¼ watt carbon resistor	.15
40	88271	Three gang variable condenser	6.00
41	88276	Field coil and housing (for R-245-A spkr.)	2.50
42	88285	Output transformer	2.00
43	88289	1.25 mfd. 150 volt paper condenser	.80
44	88298	R.F. choke (to filaments)	.20
45	88312	.25 mfd. 150 volt paper condenser (low reactance)	.40
46	88327	Antenna coil and shield assem. (iron core)	2.00
47	88328	Antenna cable and plug	1.10
48	83777	Diaphragm and shell assem. (R-245-A spkr.)	2.10
49	88054	Battery cable and fuse housing	.50
50	88365	Tone control switch	.30
51	88730	Fuse, 10 amperes	.05
52	88733	Control head less shafts	4.75
		Pilot light cable with plug, 31"	.90

PRICES SUBJECT TO CHANGE WITHOUT NOTICE

SOCKET VOLTAGES

BOTTOM VIEW

IMPORTANT: Use a high resistance voltmeter of 1000 ohms per volt. Make allowances for battery voltage variation.
NOTE A: The cathode voltage of the 77 varies from 6 to 10 volts, depending on the gang condenser setting.
NOTE B: The grid bias on the 41 output tube is —18 volts, measured from the chassis to the ungrounded filter choke terminal.

©John F. Rider Publisher

MODELS 1401 to 1409
Chassis R-140
Schematic, Voltage
Socket, Trimmers

STEWART WARNER CORP.

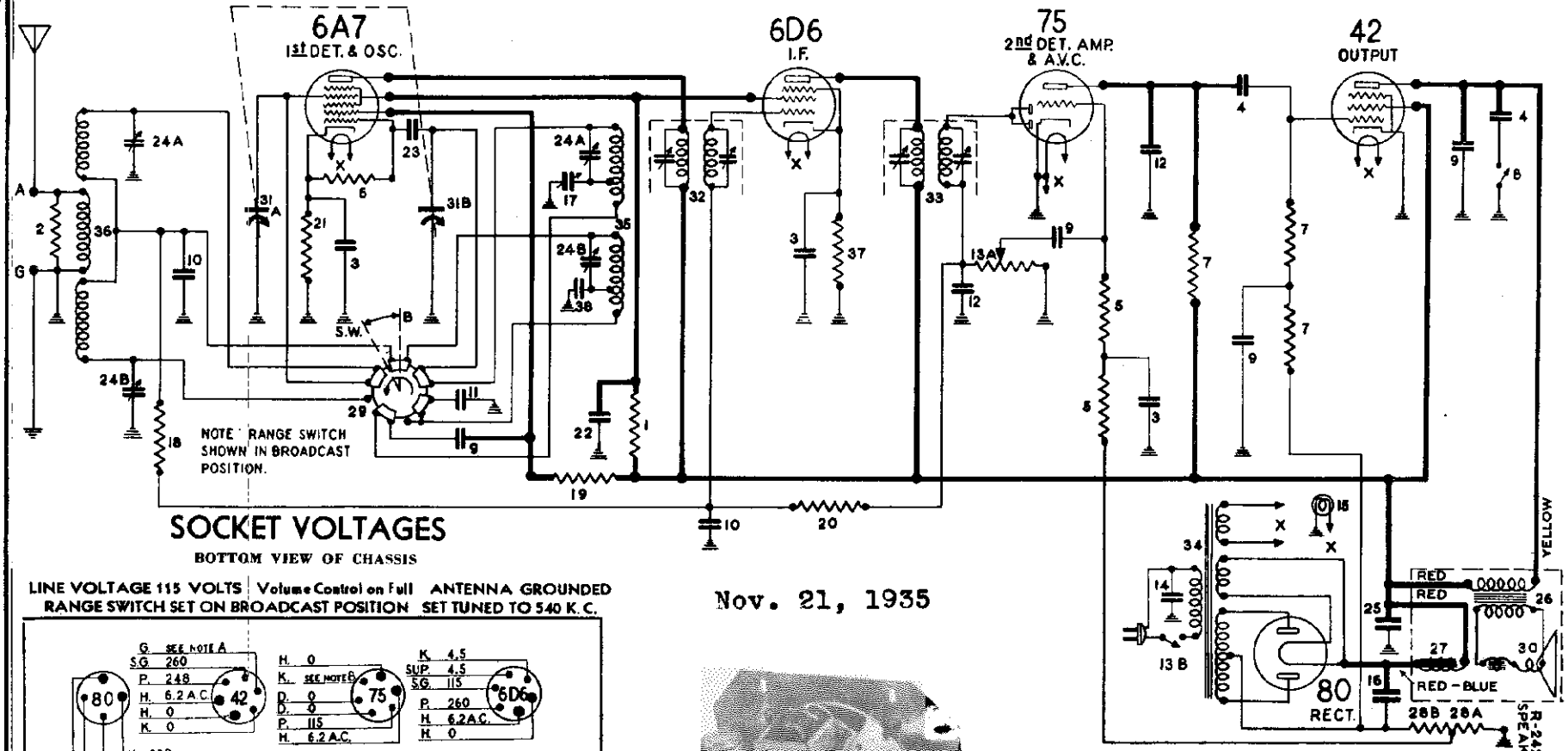

SOCKET VOLTAGES

BOTTOM VIEW OF CHASSIS

LINE VOLTAGE 115 VOLTS | Volume Control on Full | ANTENNA GROUNDED
RANGE SWITCH SET ON BROADCAST POSITION | SET TUNED TO 540 K.C.

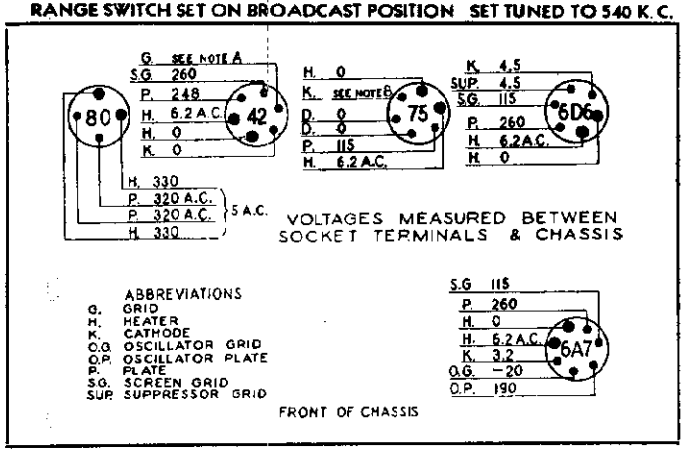

VOLTAGES MEASURED BETWEEN SOCKET TERMINALS & CHASSIS

ABBREVIATIONS

G.	GRID
H.	HEATER
K.	CATHODE
O.G.	OSCILLATOR GRID
O.P.	OSCILLATOR PLATE
P.	PLATE
S.G.	SCREEN GRID
SUP.	SUPPRESSOR GRID

IMPORTANT: Use a high resistance voltmeter of 1000 ohms per volt. Readings will vary depending upon voltage range of meter, being higher for higher range instruments. This variation is most marked for second detector plate voltage.

Voltage across speaker field with coil warm is 70 volts D. C.

NOTE A: The bias on the 42 output tube is —17.5 volts measured across the metal-clad bias resistor 28A and 28B.

NOTE B: The grid bias on the 75 second detector is —1.5 volts measured across the bias resistor 28A.

Nov. 21, 1935

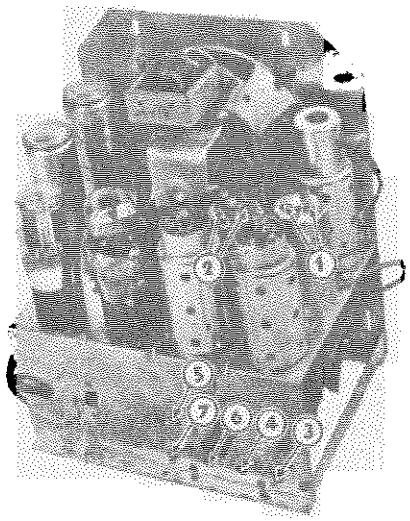

I.F. FREQUENCY 456 KC.

TUBE LOCATIONS
FRONT OF SET

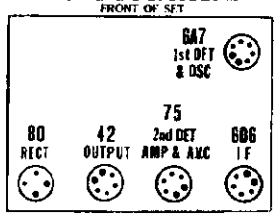

ALIGNING EQUIPMENT

For the proper alignment of this receiver, an output meter and a high grade modulated service oscillator are essential.

The oscillator should be capable of generating the frequencies of 456 KC., 600 KC., 1400 KC. and a short wave range extending to 4000 KC. The test oscillator calibration should be checked, using broadcast station signals as standards.

In order that alignment may be carried out without actuating the A.V.C. of the receiver, it must be possible to reduce the output of the test oscillator to a very low value.

ALIGNING PROCEDURE

The step by step routine given below should be carefully followed. The trimmer numbers referred to are shown in the illustration.

ALIGNING THE I. F. CIRCUIT

1. Connect the output meter between the plate of the 42 tube and the chassis through a .25 mfd. condenser or across the voice coil, depending on its type.
2. Turn the receiver volume control to maximum position. (Note: The volume control should be kept in this position throughout the entire alignment procedure.) Ground the antenna lead to the chassis.
3. Adjust the test oscillator to 456 KC. and connect its output to the modulator grid of the 6A7 tube and the chassis.
4. Adjust all four I.F. trimmers shown at 1 and 2, for maximum output as indicated on the output meter. Adjust the test oscillator output to give about one half full scale deflection on the output meter. For trimmer adjustment, it is advisable to use an all-bakelite screw driver, although one with a small metal tip may be used.

No inward or sideward pressure should be applied to the alignment tool or the condenser may spring back to a different setting as soon as the tool is removed.

5. Go back and repeat all four adjustments since the changing of each I. F. trimmer affects the others to a certain extent, thus necessitating readjustment.

BROADCAST RANGE CALIBRATION

If the set should require calibration, proceed as follows:

1. Turn the gang condenser to full mesh and check to see that the dial indicates 540 KC. If not, loosen the dial set screw and adjust the dial to the correct position.
2. Turn the range switch to the clockwise position.
3. Connect the test oscillator output to the receiver antenna lead and the chassis, and ground the chassis.
4. Adjust the test oscillator to 1400 KC.
5. Turn the receiver dial to 1400 KC.
6. Adjust trimmer No. 3 (broadcast oscillator shunt trimmer) for maximum output without changing the setting of the main condenser. Maintain the level of the test oscillator output at a value which gives about one half full scale deflection on the output meter.

BROADCAST RANGE ALIGNMENT

1. Connect a 500 ohm carbon resistor in series with the test oscillator output and the blue antenna lead.
2. Set the test oscillator to 1400 KC. and tune the receiver for maximum output.
3. Adjust trimmer No. 4 (broadcast detector shunt trimmer) for maximum output.
4. Set the test oscillator to 600 KC and tune the receiver to the signal.
5. Adjust trimmer No. 5 (broadcast oscillator series padder) for maximum output.
6. Retune the condenser gang to a peak and readjust trimmer No. 5 for maximum output.
7. Keep on readjusting trimmer No. 5 and retuning until maximum output is obtained.

SHORT WAVE RANGE CALIBRATION

1. Turn the receiver range switch to the counterclockwise position.
2. Adjust the test oscillator output to 4000 KC.
3. Set the receiver dial to 4000 KC.
4. Adjust trimmer No. 6 (short wave oscillator shunt trimmer) for maximum output.
5. To check for possible adjustment of the receiver to the image frequency, tune the dial to approximately 3.1 megacycles where a repeat signal should be heard. If no response is received here even with greatly increased test oscillator output, retune the dial to 4000 KC. and readjust trimmer No. 6 to a peak with the trimmer screw farther out.

SHORT WAVE RANGE ALIGNMENT

1. Connect a 500 ohm carbon resistor in series with the test oscillator output and the blue antenna lead.
2. Set the test oscillator for 4000 KC. and carefully tune the receiver to the signal.
3. Adjust trimmer No. 7 (short wave detector shunt trimmer) for maximum output.

Diag. No.	Part No.	DESCRIPTION	List Price
1	62183	30,000 ohm 1 watt carbon resistor	$0.20
2	67303	2000 ohm ¼ watt carbon resistor	.25
3	81630	.1 mfd. 175 volt paper condenser	.30
4	83007	.02 mfd. 600 volt paper condenser	.35
5	83072	510,000 ohm ¼ watt carbon resistor	.15
6	83080	51,000 ohm ¼ watt carbon resistor	.20
7	83082	260,000 ohm ¼ watt carbon resistor	.20
8	83179	Tone control switch	.30
9	83219	.01 mfd. 600 volt paper condenser	.30
10	83353	.05 mfd. 100 volt paper condenser	.30
11	83436	.002 mfd. 1000 volt paper condenser	.25
12	83539	.00026 mfd. mica condenser	.25
13A, 13B	83551	Volume control, 500,000 ohm; Line switch	1.25
14	83976	.012 mfd. 1000 volt paper condenser	.35
15	84058	Pilot lamp 6 volt	.15
16	84193	16 mfd. 350 volt electrolytic condenser	1.50
17	84195	Padding trimmer	.50
18	84198	110,000 ohm ¼ watt carbon resistor	.30
19	84199	16,000 ohm ¼ watt carbon resistor	.20
20	84235	1.1 megohm ¼ watt carbon resistor	.20
21	84888	300 ohm ½ watt wire wound resistor	.15
22	85059	.05 mfd. 300 volt condenser	.35
23	85061	.000051 mfd. mica condenser	.15
24A & B	85087	Dual trimmer condenser	.35
25	85112	16 mfd. 300 volt electrolytic condenser	1.50
26	85843	Output transformer (242-A Speaker)	2.00
27	85846	Field coil and housing (R 242A Spkr.)	3.00
28A, 28B	85849	25 ohm bias resistor; 275 ohm bias resistor	.35
29	85850	Range switch	1.00
30	85852	Diaphragm and shell assembly (R 242A Spkr.)	2.25
31A & B	85853	Two gang variable condenser	3.00
32	85856	1st I.F. Transformer	2.50
33	85857	2nd I.F. Transformer	2.50
34	85865	Power Transformer (R-140-A)	6.00
35	85867	Oscillator coil assembly	1.25
36	85868	Antenna coil assembly	1.50
37	85881	600 ohm ½ watt W.W. resistor	.15
38	85882	.001 mfd. mica condenser	.25
	85963	Power Transformer (R-140-B) 25 cycle, 100-240 volts, 50 cycle	7.50
	85968	Power Transformer (R-140-X)	8.00

Prices subject to change without notice.

MISCELLANEOUS PARTS

NOT SHOWN ON CIRCUIT DIAGRAM

Part No.	DESCRIPTION	List Price
83560	Tube shield	$0.15
83584	Mounting bushing (rubber)	.03
83587	No. 8-32x1¼ inch special mtg. screw	.01
84234	Tube shield cap	.05
85876	Knob	.15

Prices Subject to Change Without Notice

©John F. Rider, Publisher

MODELS 1421 to 1429

STEWART WARNER CORP. Chassis R-142A, R-142AS

Schematic, Voltage, Parts

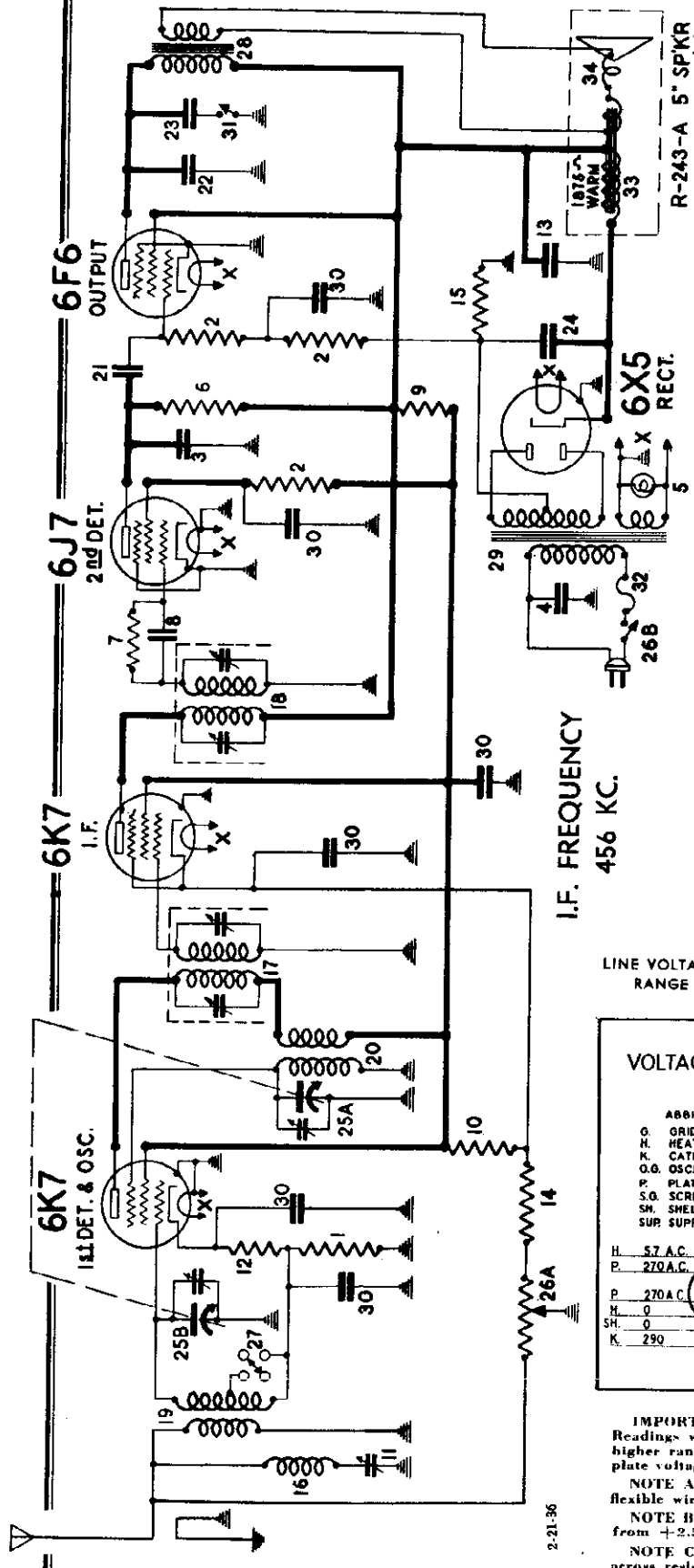

Diag. No.	Part. No.	DESCRIPTION	List Price
1	71657	3000 Ohm ¼ watt Carbon Resistor	$0.25
2	83082	260,000 Ohm ¼ watt Carbon Resistor	.20
3	83539	260 mmfd. Mica Condenser	.25
4	83976	.012 mfd. 1000 volt Paper Condenser	.35
5	84058	Dial Lamp, 6-8 volt	.15
6	84198	110,000 ohm ¼ watt Carbon Resistor	.30
7	84235	1.1 megohm ¼ watt Carbon Resistor	.20
8	85061	51 mmfd. Mica Condenser	.15
9	85064	10,000 ohm 1 watt Carbon Resistor	.20
10	85266	70,000 ohm ¼ watt Carbon Resistor	.20
11	85285	456 KC. Wave Trap Trimmer	.40
12	85691	500 ohm ½ watt Wire Wound Resistor	.20
13	88007	8 mfd. 250 volt Electrolytic Condenser	1.00
14	88009	200 ohm ½ watt Wire Wound Resistor	.15
15	88010	320 ohm 1½ watt Wire Wound Resistor	.15
16	88014	456 KC. Wave Trap Coil	.50
17	88016	1st I.F. Transformer	2.00
18	88017	2nd I.F. Transformer	2.00
19	88018	Antenna Coil	1.00
20	88019	Oscillator Coil	.70
21	88026	.02 mfd. 400 volt Paper Condenser	.30
22	88029	.004 mfd. 400 volt Paper Condenser	.30
23	88030	.01 mfd. 400 volt Paper Condenser	.30
24	88033	8 mfd. 350 volt Electrolytic Condenser	$1.10
25A & B	88035	2 Gang Variable Condenser	2.75
26 A	88036	(Volume Control, 22,000 ohm	1.25
26 B	88036	(Line Switch	
27	88037	Range Switch	.60
28	88040	Output Transformer	1.50
29	88044	Power Transformer 115 volt 60 cycle (See 88138 for 115 volt 25 cycle)	4.20
30	88046	.1 mfd. 150 volt Paper Condenser	.30
31	88054	Tone Control Switch	.30
32	88055	¾ Amp. Fuse	.12
33	88085	Field Coil Shell & Brkt. (R-243-A - 5" Spkr.) (See 88120 for R-244-A - 8" Spkr.)	3.75
34	88100	Diaphragm and voice coil (R-243-A - 5" Spkr.)	1.50
		(See 88133 for R-244-A - 8" Spkr.)	
	88120	Field Coil and Housing (R-244A - 8" Spkr.)	3.60
	88133	Diaphragm & Shell Assembly (R-244-A - 8" Spkr.)	2.00
	88138	Power Transformer, 115 volt, 25 cycle	5.50
	R-243A	5" Speaker (on chassis)	4.50
	R-244A	8" Speaker	5.70

PRICES SUBJECT TO CHANGE WITHOUT NOTICE

LINE VOLTAGE 115 VOLTS. VOLUME CONTROL ON FULL. ANTENNA GROUNDED RANGE SWITCH SET ON BROADCAST POSITION. SET TUNED TO 530 KC.

REAR OF CHASSIS

VOLTAGES MEASURED BETWEEN SOCKET TERMINALS AND CHASSIS

ABBREVIATIONS

G. GRID
H. HEATER
K. CATHODE
O.G. OSCILLATOR GRID
P. PLATE
S.G. SCREEN GRID
SH. SHELL
SUP. SUPPRESSOR GRID

BOTTOM VIEW

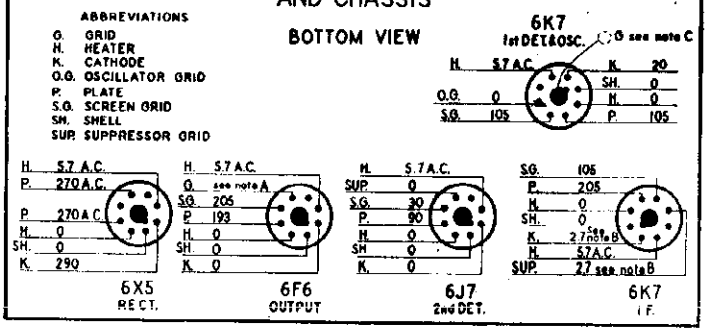

IMPORTANT: Use a high resistance voltmeter of 1000 ohms per volt. Readings will vary depending upon voltage range of meter, being higher for higher range instruments. This variation is most marked for second detector plate voltage.

NOTE A: The bias on the 6F6 output is —14 volts measured across the flexible wire wound resistor No. 15 in the circuit diagram.

NOTE B: The cathode voltage varies with the setting of the volume control, from +2.5 volts for maximum volume to +30 volts for minimum volume.

NOTE C: Grid voltage for the 6K7 first detector is +17 volts measured across resistor No. 1 in the cathode circuit. Grid bias is —3 volts measured across resistor No. 12.

©John F. Rider, Publisher

MODELS 1421 to 1429
Chassis R-142A,R-142AS
Circuit Data,Alignment
Trimmers,Parts

STEWART WARNER CORP.

MISCELLANEOUS PARTS NOT SHOWN ON CIRCUIT DIAGRAM

Part No.	DESCRIPTION	List Price
67590	Flat washer for chassis mtg.	$0.01
81090	Escutcheon mounting screw #1 x 1/4 oval head W.S.	.60 per C
83552	Chassis mounting screw #10 x 3/8	.03
85427	Tube socket (8 prong)	.15
88053	Dial scale	.30
88056	Fuse holder	.16
88057	Fuse cover	.06
88104	Dial pointer	.04
88105	Dial glass	.50
88106	Dial gasket	.01
88108	Dial escutcheon	.50
88115	Knob (push-on)	.20
88116	Knob (with set screw)	.16

PRICES SUBJECT TO CHANGE WITHOUT NOTICE

CIRCUIT DESCRIPTION

The Stewart-Warner chassis Models 142A and 142AS differ only in that the 142AS chassis includes a speaker that is mounted directly on the chassis.

These receivers use a superheterodyne circuit which employs five metal tubes. The intermediate frequency is 456 KC. The tuning range of these chassis includes, in addition to the standard broadcast band, the two police radio bands.

The signal picked up by the antenna is impressed on the primary of the antenna transformer, which has connected across it a wave trap for the purpose of eliminating 456 KC. interference. The signal is then tuned and impressed on the control grid of the 6K7 oscillator and first detector. The suppressor, or No. 3 grid of the 6K7, is used as the oscillator grid. The 456 KC. output of the first detector is amplified in the I.F. stage, using a 6K7 tube.

The second detector is of the grid leak-grid condenser type, and uses a 6J7 tube. The 6J7 is resistance coupled to the 6F6 pentode power amplifier. Bias for the output tube is obtained by grid return connection to the negative end of a resistor connected between the center tap of the power transformer high-voltage winding and ground. The bias potential so obtained is filtered by a resistance-capacity filter.

The volume control is double acting. It simultaneously changes the antenna signal input and the I.F. stage bias. Because of the sensitivity of this receiver, and due to the fact that it does not have A.V.C., it requires an antenna that is shorter than usual. The short antenna is particularly necessary where interference from powerful local stations is encountered, and where difficulty is experienced in properly controlling the volume.

When tuning on the short wave band, local broadcast stations can be heard in the background at their regular positions on the dial. This is a normal condition, and is due to the tapped coil method of tuning the antenna coil secondary to the short wave band. No aligning adjustments are required on the short wave band.

ALIGNING THE I.F. CIRCUIT

1. Connect the output meter in series with a .25 mfd. condenser between the plate of the 6F6 tube and ground, or across the voice coil, depending on the type of meter.
2. Turn the volume control to the maximum volume position. (Note: The volume control should be kept in this position throughout the entire alignment procedure.) Ground the antenna lead to the chassis.
3. Turn the range switch to the right (clockwise) to the broadcast position.
4. Adjust the test oscillator to exactly 456 KC. and connect its output to the control grid of the 6K7 first detector tube and the chassis.
5. Align I.F. trimmers No. 1, 2, 3 and 4 for maximum output as indicated on the output meter. No inward or sideward pressure should be applied to the alignment tool or the condenser may spring back to a different setting as soon as the tool is removed.
6. Repeat all I.F. trimmer adjustments since the changing of each trimmer will affect the others to a certain extent.

456 KC. WAVE TRAP ADJUSTMENT

1. Disconnect the antenna lead from ground.
2. Connect the test oscillator output in series with a 400 ohm carbon resistor to the receiver antenna lead, and connect the test oscillator ground lead to the receiver chassis. Ground the chassis.
3. Without changing the test oscillator from the frequency setting used in aligning the I.F. stage, adjust trimmer No. 5 for **MINIMUM** output. Increase the test oscillator output as a minimum is reached, in order to obtain a clearly defined setting of the trimmer. **NOTE:** If code interference is troublesome on a frequency in the neighborhood of 456 KC., the wave trap should be adjusted for **MINIMUM** output with the test oscillator set to the same frequency as the signal that is causing interference.

DIAL CALIBRATION

If the receiver should require calibration, proceed as follows:

1. Turn the gang condenser to full mesh and check to see that the dial pointer indicates 530 KC. If it does not, remove the dial knob and turn the pointer to the correct position by means of a sharp tool inserted in the pointer slots which may be reached through the dial glass. Replace the dial knob.
2. Adjust the test oscillator to 1400 KC.
3. Turn the condenser gang until the dial pointer indicates 1400 KC.
4. Adjust trimmer No. 6 (oscillator shunt trimmer) for maximum output without changing the setting of the gang condenser.

R.F. ALIGNMENT

1. Set the test oscillator to 1400 KC. and apply the signal to the receiver antenna lead through a 400 ohm carbon resistor.
2. Tune the receiver to the signal for maximum output.
3. Adjust trimmer No. 7 (detector shunt trimmer) for maximum output.

©John F. Rider. Publisher

STEWART-WARNER CORP.

MODELS 1441 to
Chassis R-144AS

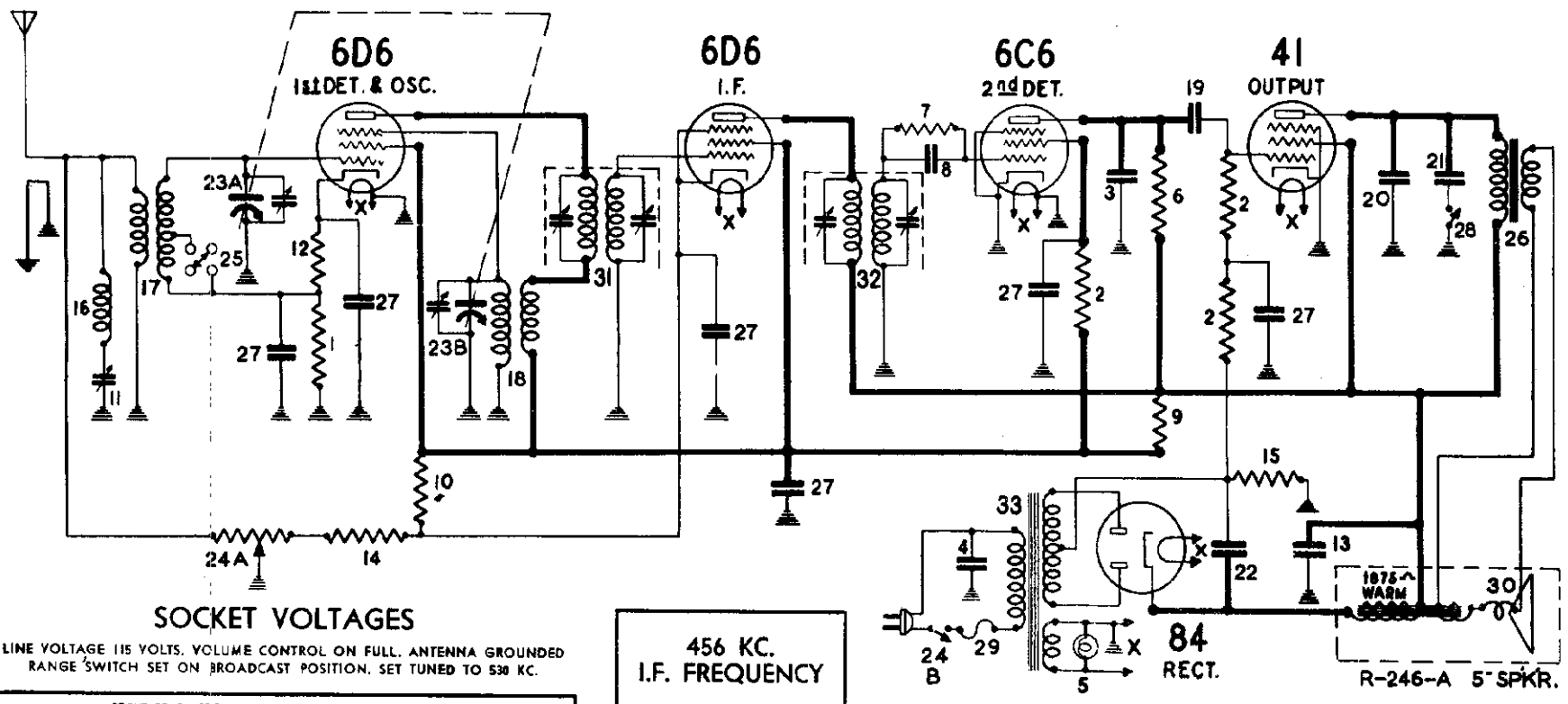

SOCKET VOLTAGES

LINE VOLTAGE 115 VOLTS. VOLUME CONTROL ON FULL. ANTENNA GROUNDED
RANGE SWITCH SET ON BROADCAST POSITION. SET TUNED TO 530 KC.

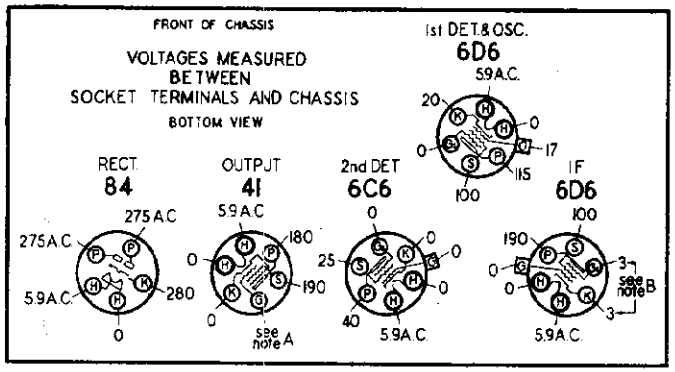

IMPORTANT: Use a high resistance voltmeter of 1000 ohms per volt. Readings will vary depending upon voltage range of meter, being higher for higher range instruments. This variation is most marked for second detector plate voltage.

NOTE A: The bias on the 6F6 output is —14 volts measured across the flexible wire wound resistor No. 15 in the circuit diagram.

NOTE B: The cathode voltage varies with the setting of the volume control, from +3 volts for maximum volume to +30 volts for minimum volume.

August 5, 1936.

R-144AS PARTS LIST

Diag. No.	Part No.	DESCRIPTION	List Price
1	71657	3000 Ohm ¼ watt Carbon Resistor	$0.25
2	83082	260,000 Ohm ¼ watt Carbon Resistor	.20
3	83539	260 mmfd. Mica Condenser	.25
4	83976	.012 mfd. 1000 volt Paper Condenser	.35
5	84058	Dial Lamp, 6-8 volt	.15
6	84198	110,000 ohm ¼ watt Carbon Resistor	.30
7	84235	1.1 megohm ¼ watt Carbon Resistor	.20
8	85061	51 mmfd. Mica Condenser	.15
9	85064	10,000 ohm 1 watt Carbon Resistor	.20
10	85266	70,000 ohm ¼ watt Carbon Resistor	.20
11	85285	456 KC. Wave Trap Trimmer	.40
12	85691	500 ohm ½ watt Wire Wound Resistor	.20
13	88007	8 mfd. 250 volt Electrolytic Condenser	1.00
14	88009	200 ohm ½ watt Wire Wound Resistor	.15
15	88010	320 ohm 1½ watt Wire Wound Resistor	.15
16	88014	456 KC. Wave Trap Coil	.50
17	88018	Antenna Coil	1.00
18	88019	Oscillator Coil	.70
19	88026	.02 mfd. 400 volt Paper Condenser	$0.30
20	88029	.004 mfd. 400 volt Paper Condenser	.30
21	88030	.01 mfd. 400 volt Paper Condenser	.30
22	88033	8 mfd. 350 volt Electrolytic Condenser	1.10
23A & B	88035	.2 Gang Variable Condenser	2.75
24 A| B	88036	(Volume Control, 22,000 ohm) (Line Switch)	1.25
25	88037	Range Switch	.60
26	88040	Output Transformer	1.50
27	88046	.1 mfd. 150 volt Paper Condenser	.30
28	88054	Tone Control Switch	.30
29	88053	¾ Amp. Fuse	.12
30	88100	Diaphragm and voice coil	1.50
31	88389	1st I. F. Transformer	2.00
32	88390	2nd I. F. Transformer	2.00
33	88393	Power Transformer, 115 V-60 cycle	4.20
	R-246-A	Speaker—5 inch	4.50

PRICES SUBJECT TO CHANGE WITHOUT NOTICE

MODELS 1441 to 1449
Chassis R-144AS
Trimmers, Alignment
Circuit Data, Parts

STEWART-WARNER CORP.

MODEL R-144AS CHASSIS (Receiver Models 1441 to 1449)

CIRCUIT DESCRIPTION

The Stewart-Warner chassis Model 144 includes a speaker that is mounted directly on the chassis.

This receiver uses a superheterodyne circuit which employs five tubes. The intermediate frequency is 456 KC. The tuning range of this chassis includes, in addition to the standard broadcast band, the two police radio bands.

The signal picked up by the antenna is impressed on the primary of the antenna transformer, which has connected across it a wave trap for the purpose of eliminating 456 KC. interference. The signal is then tuned and impressed on the control grid of the 6D6 oscillator and first detector. The suppressor, or No. 3 grid of the 6D6, is used as the oscillator grid. The 456 KC. output of the first detector is amplified in the I. F. stage, using a 6D6 tube.

The second detector is of the grid leak-grid condenser type, and uses a 6C6 tube. The 6C6 is resistance coupled to the 41 pentode power amplifier. Bias for the output tube is obtained by grid return connection to the negative end of a resistor connected between the center tap of the power transformer high-voltage winding and ground. The bias potential so obtained is filtered by a resistance-capacity filter.

The volume control is double acting. It simultaneously changes the antenna signal input and the I. F. stage bias. Because of the sensitivity of this receiver, and due to the fact that it does not have A.V.C., it requires an antenna that is shorter than usual. The short antenna is particularly necessary where interference from powerful local stations is encountered, and where difficulty is experienced in properly controlling the volume.

When tuning on the short wave band, local broad ast stations can be heard in the background at their regular positions on the dial. This is a normal condition, and is due to the tapped coil method of tuning the antenna coil secondary to the short wave band. No aligning adjustments are required on the short wave band.

ALIGNING EQUIPMENT

For proper alignment of this receiver, an output meter and a high grade modulated service oscillator are essential. The oscillator should be capable of generating the frequencies of 456 KC., 600 KC. and 1400 KC. The test oscillator calibration should be checked, using broadcast station signals as standards. For trimmer adjustment, it is advisable to use an all bakelite screwdriver, although one with a small metal tip may be used.

ALIGNING PROCEDURE

The step by step routine given below should be carefully followed. The trimmer numbers referred to are shown in the illustration.

ALIGNING THE I.F. CIRCUIT

1. Connect the output meter in series with a .25 mfd. condenser between the plate of the 41 tube and ground, or across the voice coil, depending on the type of meter.
2. Turn the volume control to the maximum volume position. (Note: The volume control should be kept in this position throughout the entire alignment procedure.) Ground the antenna lead to the chassis.
3. Turn the range switch to the right (clockwise) to the broadcast position.
4. Adjust the test oscillator to exactly 456 KC. and connect its output in series with a .1 mfd. condenser to the control grid of the 6D6 first detector tube and the chassis.
5. Align I. F. trimmers No. 1, 2, 3 and 4 for maximum output as indicated on the output meter. No inward or sideward pressure should be applied to the alignment tool, or the condenser may spring back to a different setting as soon as the tool is removed.
6. Repeat all I. F. trimmer adjustments since the changing of each trimmer will affect the others to a certain extent.

456 KC. WAVE TRAP ADJUSTMENT

1. Disconnect the antenna lead from ground.
2. Connect the test oscillator output in series with a .00025 mfd. condenser to the antenna lead, and connect the test oscillator ground lead to the receiver chassis. Ground the chassis.
3. Without changing the test oscillator from the frequency setting used in aligning the I. F. stage, adjust trimmer No. 5 for **MINIMUM** output. Increase the test oscillator output as a minimum is reached, in order to obtain a clearly defined setting of the trimmer. **NOTE:** If code interference transmitted on a frequency in the neighborhood of 456 KC. is troublesome, the wave trap should be adjusted for **MINIMUM** output with the test oscillator set to the same frequency as the signal that is causing interference.

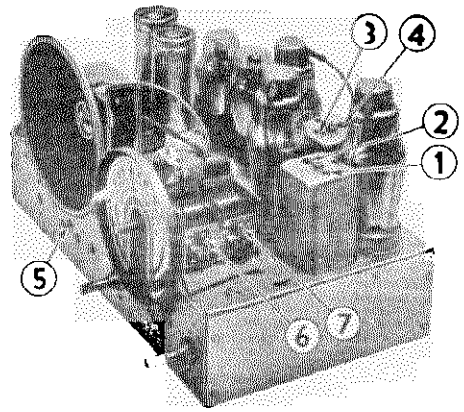

DIAL CALIBRATION

If the receiver should require calibration, proceed as follows:

1. Turn the gang condenser to full mesh and check to see that the dial pointer indicates 530 KC. If it does not, remove the dial knob and turn the pointer to the correct position by means of a sharp tool inserted in the pointer slots which may be reached through the dial glass. Replace the dial knob.
2. Adjust the test oscillator to 1400 KC.
3. Turn the condenser gang until the dial pointer indicates 1400 KC.
4. Adjust trimmer No. 6 (oscillator shunt trimmer) for maximum output without changing the setting of the gang condenser.

R. F. ALIGNMENT

1. Set the test oscillator to 1400 KC. and apply the signal to the receiver antenna lead through a .00025 mfd. condenser.
2. Tune the receiver to the signal for maximum output.
3. Adjust trimmer No. 7 (detector shunt trimmer) for maximum output.

MISCELLANEOUS PARTS NOT SHOWN ON CIRCUIT DIAGRAM

Part No.	DESCRIPTION	List Price
57890	Flat washer for chassis mtg.	$0.01
81090	Escutcheon mounting screw #1 x ¼ oval head W.S.	.60 per C
83552	Chassis mounting screw #10 x ⅞	.03
88303	Dial scale	.30
88036	Fuse holder	.16
88057	Fuse cover	.06
88101	Dial pointer	.04
88105	Dial glass	.50
88106	Dial gasket	.01
88108	Dial escutcheon	.50
88115	Knob (push-on)	.30
88116	Knob (with set screw)	.16
88162	Tube shield	.08
88164	Tube shield cap	.06

PRICES SUBJECT TO CHANGE WITHOUT NOTICE

Form 7666 Printed in U.S.A. 7-20-36

©John F. Rider Publisher

MODEL R-145 CHASSIS (RECEIVER MODELS 1451 to 1459)

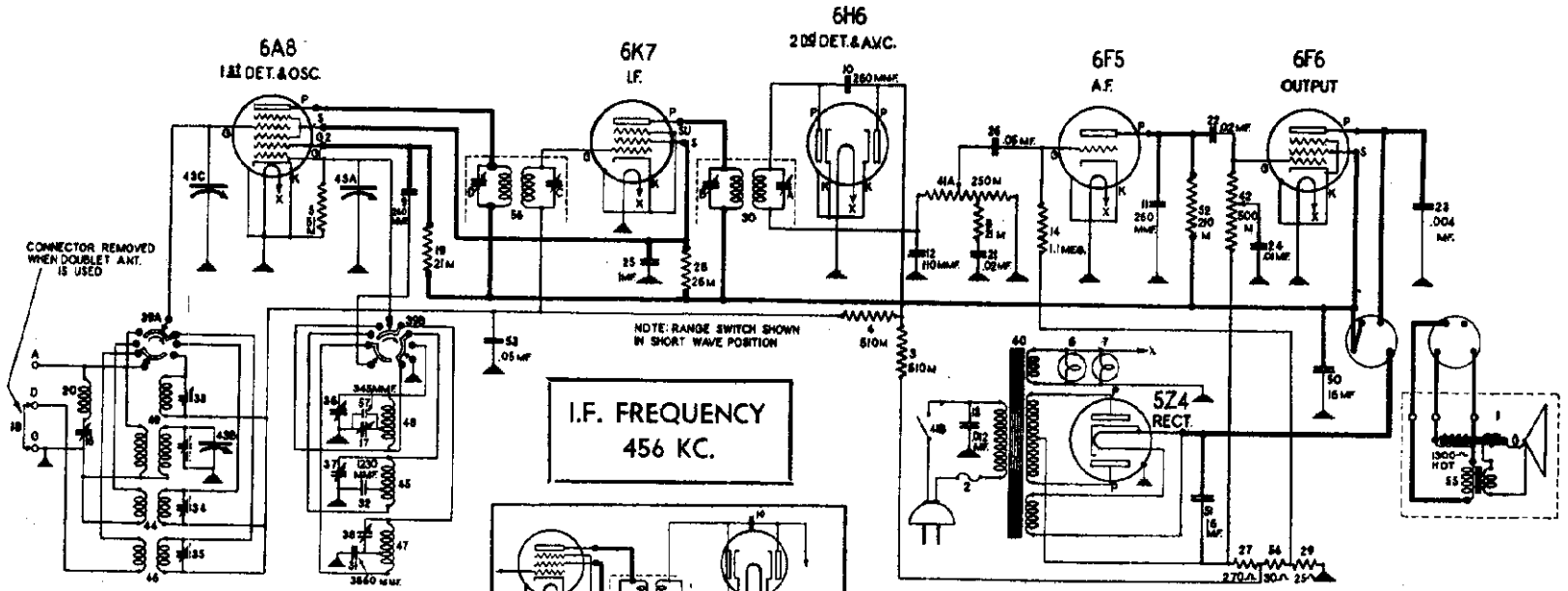

MODEL R-145 PARTS LIST

Diag. No.	Part No.	Description	List Price
1	(R-247-A)R-248-A	8" Dynamic Speaker 12" Dynamic Speaker	$ 9.00 11.50
2	88841	Fuse, 1 ampere	.10
3-4	83072	510,000 ohm ¾ watt carbon resistor	.15
5	83080	51,000 ohm ¼ watt carbon resistor	.20
6-7	83278	Pilot lamp, 6-8 volt	.15
8	83286	21,000 ohm ¼ watt carbon resistor	.20
9-10-11	83539	260 mmfd. mica condenser	.15
12	83783	110 mmfd. mica condenser	.16
13	83976	.012 mfd. 1000 v. shielded condenser	.35
14	84235	1.1 megohm ¼ watt carbon resistor	.20
16	85285	Wave trap trimmer	.40
17	85285	Padding trimmer	.40
18	85321	Ground connector	.01
19	85442	21,000 ohm ½ watt carbon resistor	.20
20	88014	Wave trap coil	.50
21-22	88026	.02 mfd. 400 v. paper condenser	.30
23	88029	.004 mfd. 400 v. paper condenser	.30
24	88030	.01 mfd. 400 v. paper condenser	.30
25	88046	.1 mfd. 150 v. paper condenser	.30
26	88189	.05 mfd. 200 v. paper condenser	.35
27	88463	270 ohm 1 watt carbon resistor	.15
28	88464	26,000 ohm ¼ watt carbon resistor	.15
29	88465	25 ohm ½ watt wire wound resistor	.12
30	88468	2nd I.F. transformer	2.40
31	88472	3860 mmfd. mica condenser	.35
32	88473	1230 mmfd. mica condenser	.25
33-34-35	88477	Trimmer condenser	.12
36-37-38	88477	Trimmer condenser	.12
39A&B	88480	Range switch	1.90
40	88481	Power transformer, 115 v. 60 cycle	5.00
41-A) 41-B)	88487	(Volume control (250,000 ohm)) (A. C. line switch	1.25

Diag. No.	Part No.	Description	List Price
42	88488	Tone control (300,000 ohm)	$ .80
43A to C	88493	Three gang condenser	5.40
44	88499	Antenna coil (Police)	.85
45	88501	Oscillator coil (Police)	.65
46	88502	Antenna coil (S.W.)	.80
47	88504	Oscillator coil (S.W.)	.80
48	88506	Oscillator coil (B.C.)	.35
49	88507	Antenna coil (B.C.)	1.60
50	88511	16 mfd. 300 v. electrolytic condenser	1.10
51	88512	16 mfd. 400 v. electrolytic condenser	1.10
52	88532	210,000 ohm ¼ watt carbon resistor	.12
53	88534	.05 mfd. 150 v. condenser (low loss)	.25
54	88613	30 ohm ½ watt wire wound resistor	.15
55	88529	Output transformer (on 247 speaker)	2.00
55	88796	Output transformer (on 248 speaker)	2.50
56	88466	1st I.F. transformer	2.40
57	89564	345 mmfd. mica condenser	.25

MODEL 145-X PARTS

58	84404	Phonograph Toggle Switch D.P. D.T.	$ 1.10
59	84407	Phonograph terminal strip	.12
	89216	Power transformer (100 to 240 volts, 25 to 133 cycles) Model R145X only	11.50

PRICES SUBJECT TO CHANGE WITHOUT NOTICE

August 15, 1936.

SOCKET VOLTAGES

VOLUME CONTROL ON FULL
RANGE SWITCH SET ON BROADCAST POSITION

ANTENNA GROUNDED
DIAL TUNED TO 525 KC.

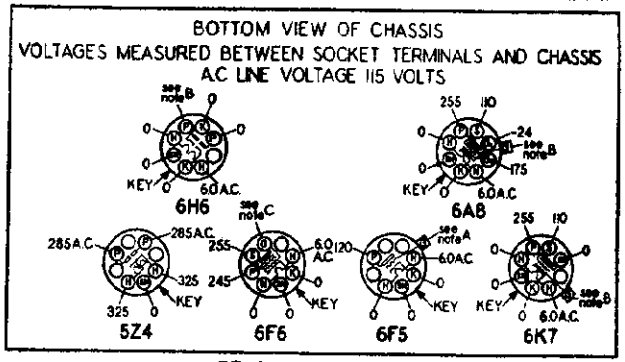

REAR OF CHASSIS

IMPORTANT: Use a high resistance voltmeter of 1000 ohms per volt.

NOTE A: The grid bias for the 6F5 is—1.5 volts measured across resistor 29.

NOTE B: The grid bias for the 6A8, 6A7, and the anode voltage of the A.V.C. section of the 6H6 is—3.5 volts measured across resistors 29 and 54.

NOTE C: The grid bias for the 6F6 output tube is—19.5 volts measured across resistors 29, 54 and 27.

MODELS 1451 to 1459
Chassis R-145
Socket, Trimmers

STEWART-WARNER CORP.

Alignment, Parts

MODEL R-145 CHASSIS (Receiver Models 1451 to 1459)

CALIBRATION AND ALIGNMENT

ALIGNING EQUIPMENT: For proper alignment, an output meter and an accurately calibrated oscillator with a tuning range from 456 KC. to 16 MC. are required.

Connect the output meter from the plate of the output tube to chassis. A convenient point to make the plate connection is to the yellow wire on speaker socket.

ALIGNING THE I. F. AMPLIFIER: Turn the volume control to maximum volume position and keep it in this position throughout the entire alignment procedure. Turn the range switch to the broadcast position (fully clockwise).

Connect the test oscillator output leads to the 6A8 control grid and chassis with a .1 mfd. condenser in series with the oscillator output. Set the oscillator to exactly 456 KC. Set the receiver dial at any point where it has no tuning effect on the oscillator signal.

Adjust the four I.F. trimmers, Nos. 1, 2, 3 and 4, for maximum output meter deflection, then repeat the trimmer adjustment.

BROADCAST BAND CALIBRATION AND ALIGNMENT: With the gang condenser in full mesh, the dial pointer should be on the white horizontal line below 530 KC. on the dial scale.

Turn the range switch to the extreme clockwise position and connect the test oscillator output to the A and G terminals of the receiver with a 400 ohm carbon resistor in series with the A terminal and the oscillator output.

Adjust the test oscillator to exactly 1500 KC. and turn the receiver dial pointer to 1500 KC. on the tuning dial. To calibrate the dial, adjust trimmer No. 5 for maximum output.

Carefully tune the receiver to the signal and adjust trimmers Nos. 6 and 7 for maximum output.

Adjust the test oscillator to 600 KC. and tune the receiver to the signal. Adjust trimmer No. 8 for maximum output. Then try to increase the output meter reading by detuning No. 8 slightly and retuning the receiver dial. If the output goes down, detune the trimmer in the opposite direction. Continue detuning the trimmer and retuning the receiver dial until maximum output meter deflection is secured. This operation is commonly known as "rocking" and when performed as described will give maximum selectivity and sensitivity even though the dial may be slightly off calibration at 600 KC.

WAVE-TRAP ADJUSTMENT: (included only in chassis stamped "S"). The wave-trap adjusting trimmer, No. 13, is located on the back of the chassis. Leave the test oscillator connected to the A and G terminals through a 400 ohm resistor and set the oscillator at 456 KC. Then adjust the wave-trap trimmer No. 13 for minimum output. If some particular station with a frequency near 456 KC. causes code interference, it may be desirable to adjust the wave-trap on the actual frequency of the interfering station.

Check the adjustment of trimmers 5, 6, and 7 at 1500 KC.

BAND NO. 2 CALIBRATION AND ALIGNMENT: Turn the range switch to the center position.

Adjust the test oscillator to exactly 5.0 MC. and turn the receiver dial pointer to exactly 5.0 MC. on the tuning dial.

To calibrate the dial, adjust trimmer No. 9 for maximum output. If two peaks are found, the proper one is that with the trimmer screw farthest out.

Carefully tune the receiver to the signal and adjust trimmer No. 10 for maximum output. Then try to increase the output by detuning No. 10 slightly and retuning the receiver dial. Continue detuning No. 10 and retuning the dial until the output meter deflection is a maximum.

BAND NO. 3 CALIBRATION AND ALIGNMENT: Turn the range switch to the extreme counter-clockwise position. Be sure the D and G terminals on the antenna terminal strip are connected together.

Set the test oscillator to 16 MC. and turn the receiver dial pointer to exactly 16 MC. on the tuning dial.

To calibrate the dial, adjust trimmer No. 11 for maximum output. Check to see that it has been adjusted to the proper peak by tuning the receiver to approximately 15.1 MC. A repeat signal should be heard at this point. If none is present, even with greatly increased oscillator output, retune the receiver to 16 MC. and adjust trimmer No. 11 to the proper peak with the trimmer screw farther out.

Carefully tune the receiver to the signal and adjust trimmer No. 12 to a peak. Then try to increase the output by detuning the trimmer slightly and retuning the dial until a maximum output meter deflection is secured. Check the adjustment by tuning the receiver to the image at about 15.1 MC. The image should be much weaker than the 16 MC. signal. If the signal at 15.1 MC. dial setting is equal to or stronger than the 16 MC. signal, trimmer No. 12 is not set to the proper peak. Turn the trimmer in a turn or so, then readjust as above.

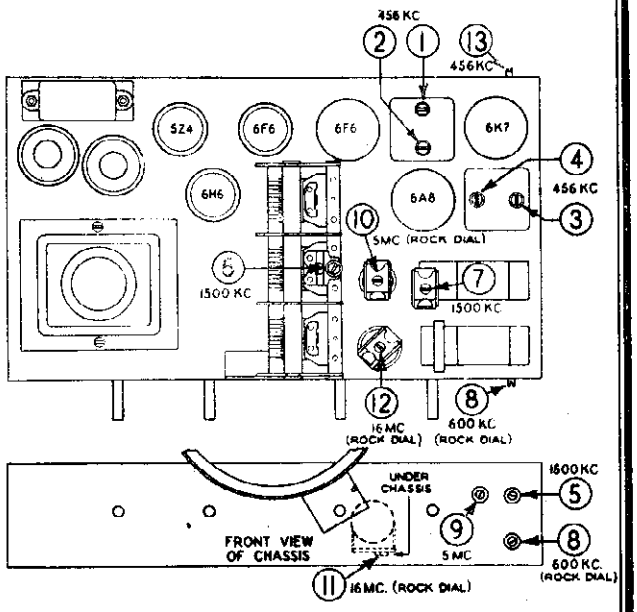

TRIMMER LOCATIONS

Trimmer Number		Alignment Frequency
1.	2nd I.F. transformer trimmer	456 KC.
2.	2nd I.F. transformer trimmer	456 KC.
3.	1st I.F. transformer trimmer	456 KC.
4.	1st I.F. transformer trimmer	456 KC.
5.	Broadcast oscillator shunt trimmer	1500 KC.
6.	Broadcast antenna shunt trimmer	1500 KC.
7.	Broadcast detector shunt trimmer	1500 KC.
8.	Broadcast oscillator series padder	600 KC.
9.	Police oscillator shunt trimmer	5 MC.
10.	Police antenna shunt trimmer	5 MC.
11.	Short wave oscillator shunt trimmer	16 MC.
12.	Short wave antenna shunt trimmer	16 MC.
13.	Wave-trap trimmer	456 KC.

MISCELLANEOUS PARTS NOT SHOWN ON CIRCUIT DIAGRAM

Part No.	Description	List Price
67590	Flat steel mtg. washer	$ .01
84428	Rubber chassis mtg. bushing	.03
84493	No. 10 x 1¼ chassis mtg. screw	.03
85066	G.D.A. terminal strip	.20
85321	Ground connector for G.D.A. strip	.01
88036	Fuse mounting	.16
88057	Fuse cover	.06
88675	Speaker socket	.12
88956	Escutcheon with glass	1.65
88983	Knob; tuning, volume and tone	.18
88984	Knob; range switch	.20

TUNING DRIVE AND DIAL PARTS

Part No.	Description	List Price
83278	Dial lamp	$ .15
88500	Dial scale (for rear lighting)	1.80
88564	Pointer and stud assembly	.12
88743	Dial drive shaft	.15
88744	Dial drive shaft retainer spring	.05
88745	Dial ring and bracket assembly (for edge lighting)	.90
88748	Dial disc and bushing assembly	.30
89283	Pilot lamp socket	.10
89244	Dial scale (for edge lighting)	1.80
89284	Pilot lamp shield	.02
89486	Dial ring and bracket assembly (for rear lighting)	.90

PRICES SUBJECT TO CHANGE WITHOUT NOTICE

FORM 7794—7-30-36—PRINTED IN U.S.A.

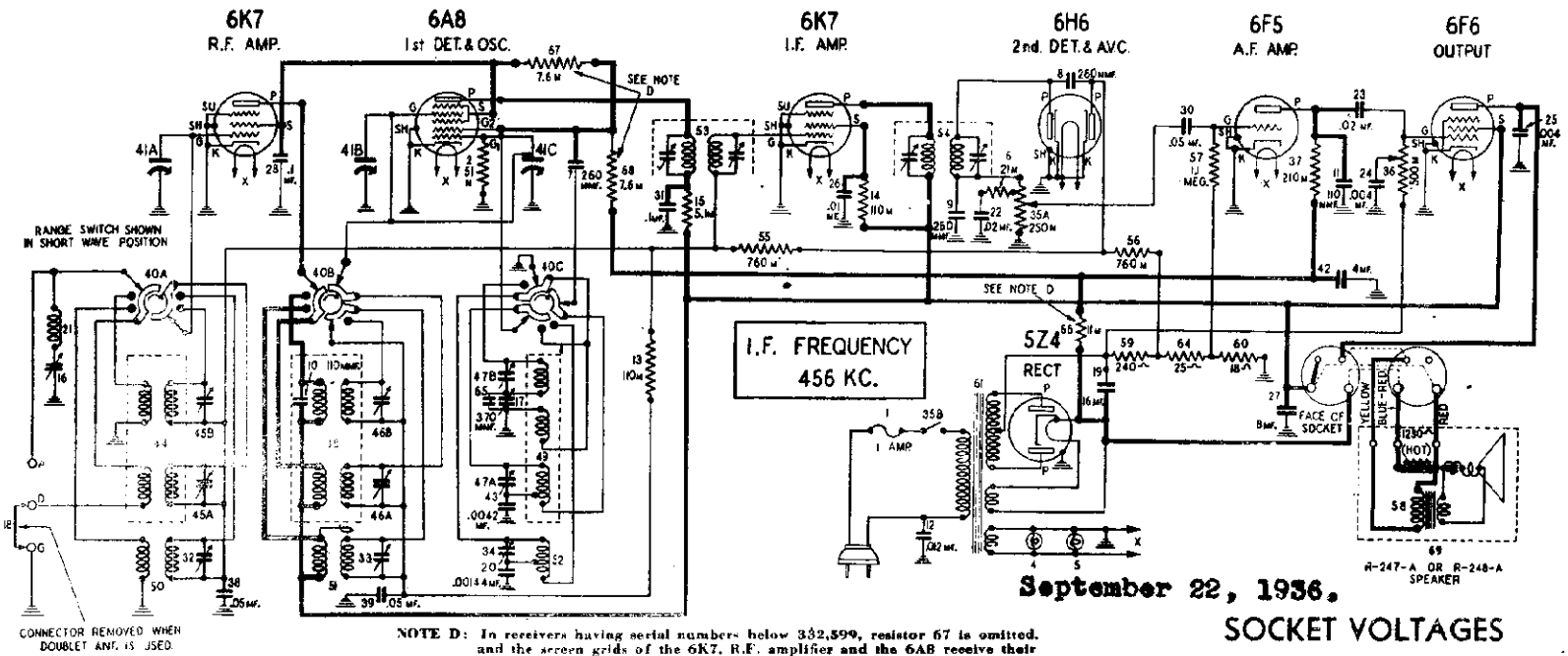

September 22, 1936.

MODEL R-147 PARTS LIST

Diagram Number	Part Number	Description	List Price
1	88841	Fuse, 1 amp	.10
2	83080	51,000 ohm, ½ watt carbon resistor	.20
4-5	83278	Pilot lamp	.15
6	83286	21,000 ohm, ½ watt carbon resistor	.20
7-8-9	83539	.260 mmfd. mica condenser	.15
10-11	83783	110 mmfd. mica condenser	.16
12	83976	.012 mfd. 1000 v. shielded condenser	.35
13-14	84198	110,000 ohm ½ watt carbon resistor	.30
57	84235	1.1 megohm ½ watt carbon resistor	.20
15	84720	5,100 ohm ½ watt carbon resistor	.12
16	85285	Wave Trap Condenser	.40
17	85285	Padding Trimmer	.40
18	85321	Ground Connector for C.D.A. strip	.01
19	85431	16 mfd. 460 v. electrolytic condenser	1.25
20	85562	.00144 mfd. mica condenser	.30
61	85782	Power transformer 115 V. 60 cycles	5.20
22-23	88026	.02 mfd. 400 V. paper condenser	.30
24-25	88027	.004 mfd. 400 V. paper condenser	.30
26	88030	.01 mfd. 400 V. paper condenser	.30
27	88033	.8 mfd. 350 V. electrolytic condenser	1.10
28	88046	.1 mfd. 150 V. paper condenser	.50
30	88189	.05 mfd. 200 V. paper condenser	.35
31	88191	.1 mfd. 300 V. paper condenser	.35
64	88465	.25 ohm ½ watt wire wound resistor	.12
32-33-34	88477	Trimmer condenser	.12
35-A	88487	Volume Control (250,000 ohms) A.C. line switch	1.25
35-B			
36	88488	Tone control 500,000 ohms	.80
58	88529	Output transformer on R-247-A speaker	2.00
37	88532	210,000 ohm ½ watt carbon resistor	.12
38-39	88534	.05 mfd. 150 V. condenser (low loss)	.21
40A to C	88573	Range switch	2.50
41A to C	88574	Three gang condenser	5.00
42	88576	4 mfd. 250 V. electrolytic condenser	.80
60	88581	18 ohm ½ watt wire wound resistor	.15
43	88587	.0042 mfd. mica condenser	.32
44	88592	Antenna coil & shield assem. (B.C.&S.W.) with trimmer	2.20
45A-45B 46A-46B 47A-47B	88596	Trimmer Condenser	.25
48	88597	R.F. coil & shield assem. (B.C. & S.W.) with trimmer	2.40
49	88599	Oscillator coil & shield assem. (B.C.&S.W.) with trimmer	2.20
50	88602	Antenna coil assem. (Police) with trimmer	.85
51	88601	R.F. coil assem. (Police) with trimmer	1.00
52	88605	Oscillator coil (Police) with trimmer	.70
53	88606	1st I.F. transformer	2.50
54	88607	2nd I.F. transformer	2.50
55-56	88851	760,000 ohm ½ watt carbon resistor	.12
57	84235	1.1 megohm ½ watt carbon resistor	.20
58	88796	Output transformer on R-248 spkr.	2.50
	88529	Output transformer on R-247 spkr.	2.00
59	89439	240 ohm 2 watt wire wound resistor	.12
60	88584	18 ohm ½ watt wire wound resistor	.15
61	85782	Power transformer, 115 V. 60 cycles	5.20
64	88465	.25 ohm ½ watt wire wound resistor	.12
65	89525	370 mmfd. mica condenser	.40
66	89751	11,000 ohm 1 watt carbon resistor	.12
67	89752	7,600 ohm ½ watt carbon resistor	.12
68	89754	7,600 ohm 1 watt carbon resistor	.12
69	R-247-A	Dynamic speaker, 8"	9.00
	R-248-A	Dynamic speaker, 12"	11.50

PRICES SUBJECT TO CHANGE WITHOUT NOTICE

NOTE D: In receivers having serial numbers below 332,599, resistor 67 is omitted, and the screen grids of the 6K7, R.F. amplifier and the 6A8 receive their current through a 31,000 ohm, 1 watt carbon resistor which is connected to the screen grid of the 6F6. In addition, resistor 66 has a rating of 30,000 ohms, 1 watt and resistor 68 has a rating of 16,000 ohms, ¼ watt.

SOCKET VOLTAGES

RANGE SWITCH ON BROADCAST POSITION
VOLUME CONTROL ON FULL

DIAL TUNED TO 530 KC.
ANTENNA GROUNDED

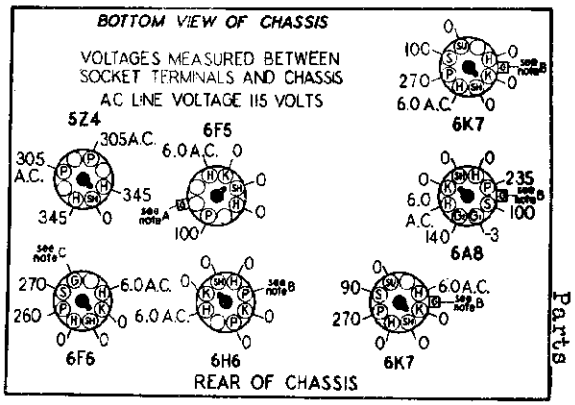

IMPORTANT: Use a high resistance voltmeter of 1000 ohms per volt.

NOTE A: The grid bias for the 6F5 is −1.3 volts measured across resistor 60.

NOTE B: The grid bias for the 6A8, 6K7's, and the anode voltage of the A.V.C. section of the 6H6 is −3.0 volts measured across resistors 60 and 64.

NOTE C: The grid bias for the 6F6 output tube is −19.0 volts measured across resistor 59, 64 and 60.

MODEL R-146 CHASSIS (Receiver Models 1461 to 1469)

CALIBRATION AND ALIGNMENT

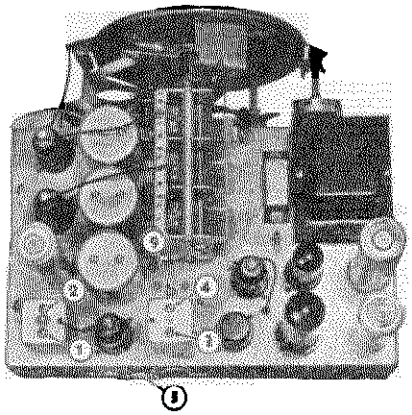

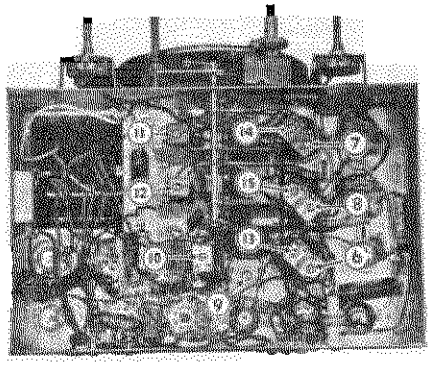

ALIGNING EQUIPMENT: For proper alignment, an output meter and an accurately calibrated oscillator with a tuning range from 456 KC. to 16 MC. are required.

Connect the output meter from the plate of the output tube to chassis. A convenient point to make the plate connection is to the yellow wire on speaker socket.

ALIGNING THE I. F. AMPLIFIER: Turn the volume control to maximum volume position and keep it in this position throughout the entire alignment procedure. Turn the range switch to the broadcast position (fully clockwise).

Connect the test oscillator output leads to the 6A8 control grid and chassis with a .1 mfd. condenser in series with the oscillator output. Set the oscillator to exactly 456 KC. Set the receiver dial at any point where it has no tuning effect on the oscillator signal.

Adjust the four I.F. trimmers, Nos. 1, 2, 3 and 4, for maximum output meter deflection, then repeat the trimmer adjustment.

WAVE-TRAP ADJUSTMENT: The wave-trap adjusting trimmer, No. 5, is located on the back of the chassis. Leave the test oscillator at 456 KC. Connect the oscillator output to the A and G terminals with a 400 ohm resistor in series with the A terminal and oscillator output. Then adjust the wave-trap trimmer No. 5 for minimum output. If some particular station with a frequency near 456 KC. causes code interference, it may be desirable to adjust the wave-trap on the actual frequency of the interfering station.

BROADCAST BAND CALIBRATION AND ALIGNMENT: With the gang condenser in full mesh, the dial pointer should be on the white horizontal line below 530 KC. on the dial scale. Leave the range switch in the extreme clockwise position, and leave the test oscillator connected to the A and G terminals of the receiver through a 400 ohm resistor.

Adjust the test oscillator to exactly 1500 KC. and turn the receiver dial pointer to 1500 KC. on the tuning dial. To calibrate the dial, adjust trimmer No. 6 for maximum output.

Carefully tune the receiver to the signal and adjust trimmers Nos. 7 and 8 for maximum output.

Adjust the test oscillator to 600 KC. and tune the receiver to the signal. Adjust trimmer No. 9 for maximum output. Then try to increase the output meter reading by detuning No. 9 slightly and retuning the receiver dial. If the output goes down, detune the trimmer in the opposite direction. Continue detuning the trimmer and retuning the receiver dial until maximum output meter deflection is secured. This operation is commonly known as "rocking" and when performed as described will give maximum selectivity and sensitivity even though the dial may be slightly off calibration at 600 KC.

BAND NO. 2 CALIBRATION AND ALIGNMENT: Turn the range switch to the center position.

Adjust the test oscillator to exactly 5.0 MC. and turn the receiver dial pointer to exactly 5.0 MC. on the tuning dial.

To calibrate the dial, adjust trimmer No. 10 for maximum output. If two peaks are found, the proper one is that with the trimmer screw farthest out.

Carefully tune the receiver to the signal and adjust trimmers Nos. 11 and 12 for maximum output. Then try to increase the output by detuning No. 12 slightly and retuning the receiver dial. Continue detuning No. 12 and retuning the dial until the output meter deflection is a maximum. Then readjust No. 11 for maximum output.

BAND NO. 3 CALIBRATION AND ALIGNMENT: Turn the range switch to the extreme counter-clockwise position. Be sure the D and G terminals on the antenna terminal strip are connected together.

Set the test oscillator to 16 MC. and turn the receiver dial pointer to exactly 16 MC. on the tuning dial.

To calibrate the dial, adjust trimmer No. 13 for maximum output. Check to see that it has been adjusted to the proper peak by tuning the receiver to approximately 15.1 MC. A repeat signal should be heard at this point. If none is present, even with greatly increased oscillator output, retune the receiver to 16 MC. and adjust trimmer No. 13 to the proper peak with the trimmer screw farther out.

Carefully tune the receiver to the signal and adjust trimmers Nos. 14 and 15 to a peak. Then try to increase the output by detuning No. 15 slightly and retuning the dial until a maximum output meter deflection is secured. Then readjust No. 14 for maximum output. Check the adjustment by tuning the receiver to the image at about 15.1 MC. The image should be much weaker than the 16 MC. signal. If the signal at 15.1 MC. dial setting is equal to or stronger than the 16 MC. signal, trimmer No. 15 is not set to the proper peak. Turn the trimmer in a turn or so, then readjust as above.

TRIMMER LOCATIONS

Trimmer Number		Alignment Frequency
1	1st I.F. transformer trimmer	456 KC.
2	1st I.F. transformer trimmer	456 KC.
3	2nd I.F. tranformer trimmer	456 KC.
4	2nd I.F. tranformer trimmer	456 KC.
5	Wave trap trimmer	456 KC.
6	Broadcast oscillator shunt trimmer	1500 KC.
7	Broadcast antenna shunt trimmer	1500 KC.
8	Broadcast detector shunt trimmer	1500 KC.
9	Broadcast oscillator series padder	600 KC.
10	Police oscillator shunt trimmer	5 MC.
11	Police antenna shunt trimmer	5 MC.
12	Police detector shunt trimmer	5 MC.
13	Short wave oscillator shunt trimmer	16 MC.
14	Short wave antenna shunt trimmer	16 MC.
15	Short wave detector shunt trimmer	16 MC.

MISCELLANEOUS PARTS

Part No.	Description	List Price
67977	No. 14x1¼ mtg. screw	$ .03
77381	Flat steel washer	.01
84428	Rubber chassis mtg. bushing	.03
85066	G.D.A. terminal strip	.20
85321	Ground connector for G.D.A. strip	.01
88056	Fuse mounting	.16
88057	Fuse cover	.06
88675	Speaker socket	.12
88825	Link and lever assembly	.14
88831	Bracket for range selector knob shaft	.02
88832	Shaft, range selector knob	.10
88985	Tuning knob, front section	.20
88986	Tuning knob, rear section	.25
88987	Knob, range switch	.20
89038	Knob, tone and volume control	.20

DIAL PARTS

83278	Pilot lamp No. 40, 6-8 volts	.15
85902	Dual ratio planetary dial drive	.90
88835	Idler gear and pinion assembly	.25
88839	Tension spring (for idler gear)	.10
88840	Dial disc and bushing assem.	.40
88844	Dial ring, bracket and shaft assem. (for edge lighting)	1.00
88956	Escutcheon with glass	1.65
88958	No. 2 x ⅜ round head wood screw (each)	.01
88998	Second pointer	.05
89000	Dial scale (for rear lighting)	2.00
89001	Main pointer and stud assem.	.10
89027	Spring washer (for planetary drive)	.01
89144	Tension spring (for idler gear)	.10
89283	Pilot lamp socket	.10
89284	Pilot lamp shield	.02
89285	Dial background (with edge lighting)	.12
89286	Dial scale (for edge lighting)	1.80
89484	Dial ring, bracket and shaft assembly (for rear lighting)	1.60
89799	Dial scale retaining clip	.02

PRICES SUBJECT TO CHANGE WITHOUT NOTICE

MODELS 1491 to 1499
Chassis R-149
Socket, Trimmers
Alignment, Notes
Parts

STEWAR

MODEL R-149 CHASSIS (Receiver Models 1491 to 149

CIRCUIT DESCRIPTION

The Stewart-Warner model R-149 chassis is a 12 tube, all-wave superheterodyne with an intermediate frequency of 456 kc. It has four tuning ranges which are 140 to 400 kc., 527 to 1750 kc., 1720 to 5600 kc., and 5.5 to 18.0 mc. Individual coils and trimmer condensers are provided for each band so that each circuit can be adjusted to give maximum efficiency on every frequency range.

The antenna coils are designed to give efficient reception with either a standard or doublet type antenna without the use of any additional coupling transformer. A small connector is provided on the antenna terminal strip to short the D and G terminals when a standard antenna is used. If a doublet antenna is used, the connector should be turned or removed to open the connection between the D and G terminals.

SELECTIVITY—SENSITIVITY SWITCH

Two degrees of selectivity are obtainable by means of the selectivity-sensitivity control operating on the first I. F. transformer. When the control is in the sharp position (counter-clockwise) the first I. F. transformer functions as a typical transformer with sharply tuned primary and secondary circuits. When it is in the broad position (clockwise) the resonant frequency of the primary is decreased and that of the secondary circuit increased. At the same time the selectivity curve of the secondary is broadened and the amplification reduced. The combined effect gives a broad flat top to the intermediate frequency amplifier selectivity curve.

AUTOMATIC VOLUME CONTROL

This chassis uses an amplified and dual A. V. C. action to keep the second detector signal more constant and still have sharp tuning. The diode of the 6H6 second detector tube which is capacity coupled to the second I. F. transformer, produces the A. V. C. voltage for the I. F. tube and the tuning eye only. The A. V. C. voltage for the R. F. and first detector tubes is secured by means of the 6J7 A. V. C. amplifier tube and the second 6H6 tube. The control grid of the 6J7 tube is capacity coupled to the control grid of the 6K7 first I. F. tube.

FIVE POINT TONE CONTROL

This control permits the following combinations of treble and bass response. No. 1 is with the switch in the extreme counter-clockwise position.

1. Minimum treble and emphasized bass.
2. Medium treble and emphasized bass.
3. Medium treble and normal bass.
4. Maximum treble and normal bass.
5. Maximum treble and emphasized bass.

CALIBRATION AND ALIGNMENT

Experience has definitely shown that a selective chassis such as the Stewart-Warner Model R-149 cannot be properly aligned by ear or "on the air." A high grade modulated service oscillator and an output meter are absolutely essential.

The oscillator should cover a frequency range extending from 175 KC. to 16,000 KC. It should have a wide range of signal output with a continuously variable output control. A very weak signal is needed for proper alignment without actuating the A. V. C. and a very strong one to align the A. V. C. channel and for use when the receiver is badly out of alignment.

PRECAUTIONS

During calibration and alignment, keep the receiver volume control in the maximum volume position if noise is not too great, and adjust the oscillator output so that the output meter reads near the center of its scale.

Use the lowest output meter scale that will provide a steady reading. For making trimmer adjustments, use a bakelite aligning tool which has only a small metal screwdriver tip.

PRELIMINARY STEPS

Connect the output meter across the two plates of the two 6L6 power output tubes. **Important:** Do not connect from one 6L6 plate to chassis since this would unbalance the circuit and cause hum.

CALIBRATION AND ALIGNMENT

The following procedure on the proper adjustment of the various trimmers is divided into two classifications, calibration and alignment. Calibration is the adjustment of certain trimmers so that the radio signals can be received at the proper dial settings. Calibration of the R-149 is made at the high-frequency end of the dial. Alignment is the adjustment of trimmers so that the antenna and detector circuits are to give maximum sensitivity and selectivity.

The R. F. calibration and alignment of each band is pendent of all others, so that one band may be re-calib or re-aligned without affecting the trimmer adjustments o of the other bands.

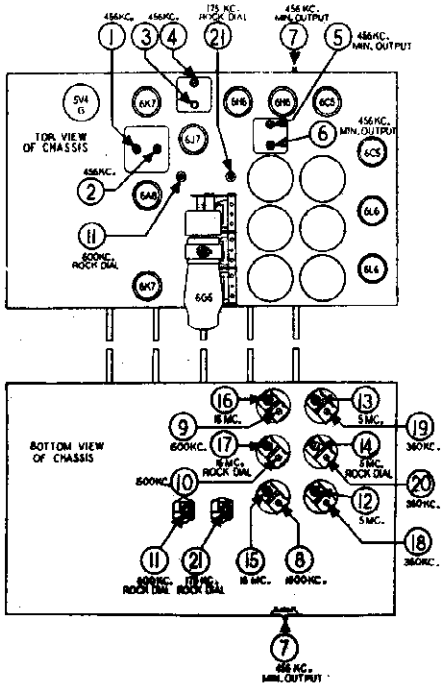

ALIGNMENT OF THE I. F. AMPLIFIER

1. (a) Turn the volume control to maximum volume tion and turn the sensitivity-selectivity control to the position (counter-clockwise).

(b) Turn the range switch to the broadcast position ond from the right) and set the tuning dial to any point v there is no tuning effect on the oscillator signal.

(c) Connect the test oscillator output leads to the 6A8 trol grid and the chassis with a .1 or .25 mfd. condens series with the lead to the 6A8 grid. **DO NOT OMIT CONDENSER OR ALIGNMENT WILL BE INCORRECT.**

(d) Set the test oscillator to exactly 456 KC. Adjus output of the test oscillator to give about half scale defle on the output meter.

(e) Adjust the four I. F. transformer trimmers (trim No. 1, 2, 3 and 4) for maximum output meter deflectio

ALIGNMENT OF THE A. V. C. AMPLIFIER

2. (a) Leave the test oscillator set at 456 KC. and nected to the 6A8 control grid through a condenser.

(b) Turn the volume control down to protect the o meter and turn the output control of the oscillator up to enough signal so that the tuning eye closes more than way. If your oscillator cannot give this much 456 KC. ou the A. V. C. amplifier can be aligned immediately after pleting the Broadcast Alignment by means of a 1500 KC nal fed into the antenna terminal, with the receiver tun the signal.

(c) Readjust the volume control so that the output shows about half scale deflection.

(d) Adjust the two A. V. C. amplifier trimmers No. 6 for minimum output meter deflection. Readjust the vo control or oscillator output to the point necessary to o a clearly defined point of minimum output when adjustin trimmers.

(e) Reduce the oscillator output to normal and turn volume control full on and repeat the adjustment of the trimmers as explained in 1 (a) to (e).

ADJUSTMENT OF WAVE TRAP

3. (a) Leave the test oscillator at 456 KC. but connec oscillator output to the A and G terminals of the receiver

FORM 7640 PRINTED IN U. S. A. 9-14-38

©John F. Rider, Publisher

Chassis R-149X
Phonograph Circuit

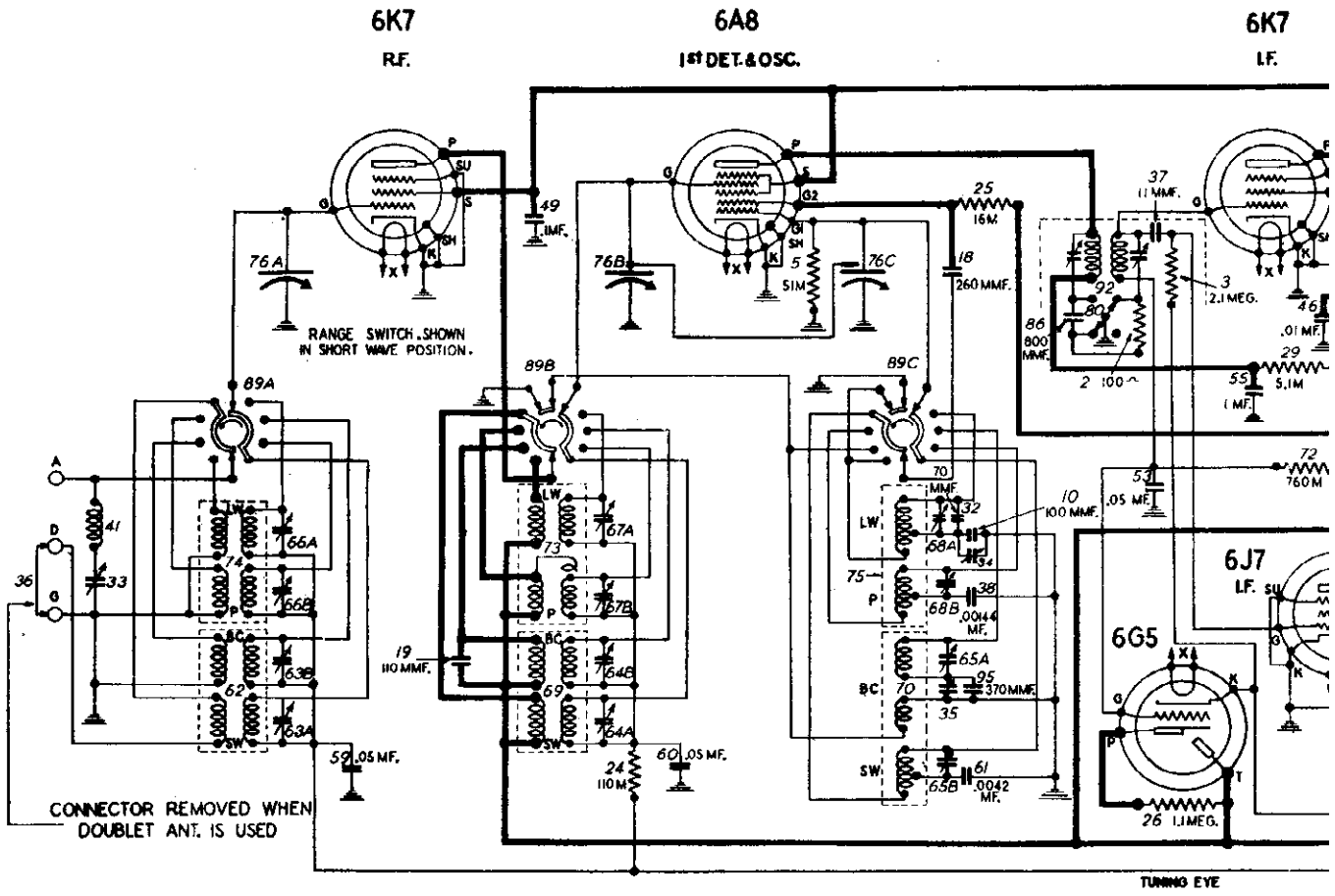

Diagram Number	Part Number	DESCRIPTION	List Price
1	67303	2000 ohm ¼ watt carbon resistor	$0.15
2	67786	100 ohm ¼ watt carbon resistor	.12
3	81644	2.1 megohm ¼ watt carbon resistor	.12
4	83072	510,000 ohm ¼ watt carbon resistor	.12
5-6	83080	51,000 ohm ¼ watt carbon resistor	.12
7-8-9	83082	260,000 ohm ¼ watt carbon resistor	.12
10	83109	100 mmfd. mica condenser	.20
11-12-13	83278	Pilot lamp No. 40-6-8 volts	.15
14	83286	21,000 ohm ¼ watt carbon resistor	.12
15-16 / 17-18	83539	260 mmfd. mica condenser	.20
19	83783	110 mmfd. mica condenser	.20
20-21	83803	12 mfd. 15 V. electrolytic condenser	.80
22	83976	.012 mfd. 1000 V. shielded condenser	.40
23-24	84198	110,000 ohm ¼ watt carbon resistor	.12
25	84199	16,000 ohm ¼ watt carbon resistor	.12
26	84235	1.1 megohm ¼ watt carbon resistor	.12
27	84236	2,500 ohm ¼ watt carbon resistor	.12
28	84672	Fuse, 2 amperes	.10
29-30-31	84720	5,100 ohm ¼ watt carbon resistor	.12
32	84833	70 mmfd. mica condenser	.20
33	85285	Antenna trap condenser	.40
34-35	85285	Padding trimmer	.40
36	85321	Ground connector	.01
37	85454	11 mmfd. mica condenser	.15
38	85562	.00144 mfd. mica condenser	.25
39	85583	16 mfd. 450 V. electrolytic condenser	2.50
40	88007	8 mfd. 250 V. electrolytic condenser	1.00
41	88014	Antenna trap coil	.50
42	88026	.02 mfd. 400 Volt paper condenser	.25
43-44	88029	.004 mfd. 400 Volt paper condenser	.25
45-46 / 47-48	88030	.01 mfd. 400 Volt paper condenser	.25
49-50	88046	.1 mfd. 150 Volt paper condenser	.25
51-52	88185	.006 mfd. 600 Volt paper condenser	.25
53-54	88189	.05 mfd. 200 Volt paper condenser	.25
55-56	88191	.1 mfd. 300 Volt paper condenser	.25
57	88511	16 mfd. 300 Volt electrolytic condenser	1.10
58	88532	210,000 ohm ¼ watt carbon resistor	.12
59-60	88534	.05 mfd. 150 Volt condenser (low loss)	.25
61	88587	.0042 mfd. mica condenser	.35
62	88592	Antenna coil and shield (B.C. & S.W.) with trimmers	2.70
63A-63B / 64A-64B / 65A-65B / 66A-66B / 67A-67B / 68A-68B	88596	Trimmer condenser	.30

Diagram Number	Part Number	DESCRIPTION	List Price
69	88597	R.F. coil and shield (B.C. & S.W.) with trimmers	$3.10
70	88599	Osc. coil and shield (B.C. & S.W.) with trimmers	2.50
71-72	88854	760,000 ohm ¼ watt carbon resistor	.12
73	88925	R.F. coil and shield (Police & L.W.) with trimmers	2.50
74	88930	Antenna coil and shield (Police & L.W.) with trimmers	2.65
75	88952	Osc. coil and shield (Police & L.W.) with trimmers	2.10
76A to C	89044	Variable gang condenser	5.20
77	89053	10 mfd. 25 V. electrolytic condenser	.92
78	89062	Push-pull input transformer	3.00
79	89096	3300 ohm 3 watt wire wound resistor	.40
80	89103	Selectivity switch	.85
81	89105	150 ohm 3 watt wire wound resistor	.50
82	89106	Power transformer (115 volts—60 cycles) (See Part No. 89537 for other voltages, etc.)	9.00
83	89111	2nd I. F. transformer	2.50
84	89112	I. F. transformer (A.V.C.)	2.10
85-86	89114	800 mmfd. mica condenser	.20
87	89116	20 ohm ½ watt wire wound resistor	.12
88A / 88B	89118	{Vol. cont. (1 megohm) tap 200,000 ohm from gr'nd & A.C. line switch}	1.25
89A to C	89124	Range switch	2.50
90	89128	Tone control switch	1.10
91	89139	Output transformer	3.00
92	89180	1st I. F. transformer	3.40
93	89186	4 mfd. 150 V. electrolytic condenser	1.00
94	89255	5000 ohm 1 watt carbon resistor	.15
95	89525	370 mmfd. mica condenser	.40
96	R-255-A	12" Dynamic speaker	10.50
97	R-256-A	10" Dynamic speaker	9.50

R-149-X PARTS

Diagram Number	Part Number	DESCRIPTION	List Price
98A-98B	84404	Phonograph toggle switch D.P.D.T.	1.10
	89537	Power transformer 100 to 240V—25 to 133 cycles	13.25
99	89709	Phonograph terminal strip	.15

PRICES SUBJECT TO CHANGE WITHOUT NOTICE

©John F. Rider, Publisher

RNER CORP.

MODELS 1491 to 1499
Chassis R-149
Schematic, Voltage
Parts

6H6 — 2nd DET. & A.V.C.
6C5 — 1st A.F.
6C5 — 2nd A.F.
6L6 — PUSH-PULL OUTPUT

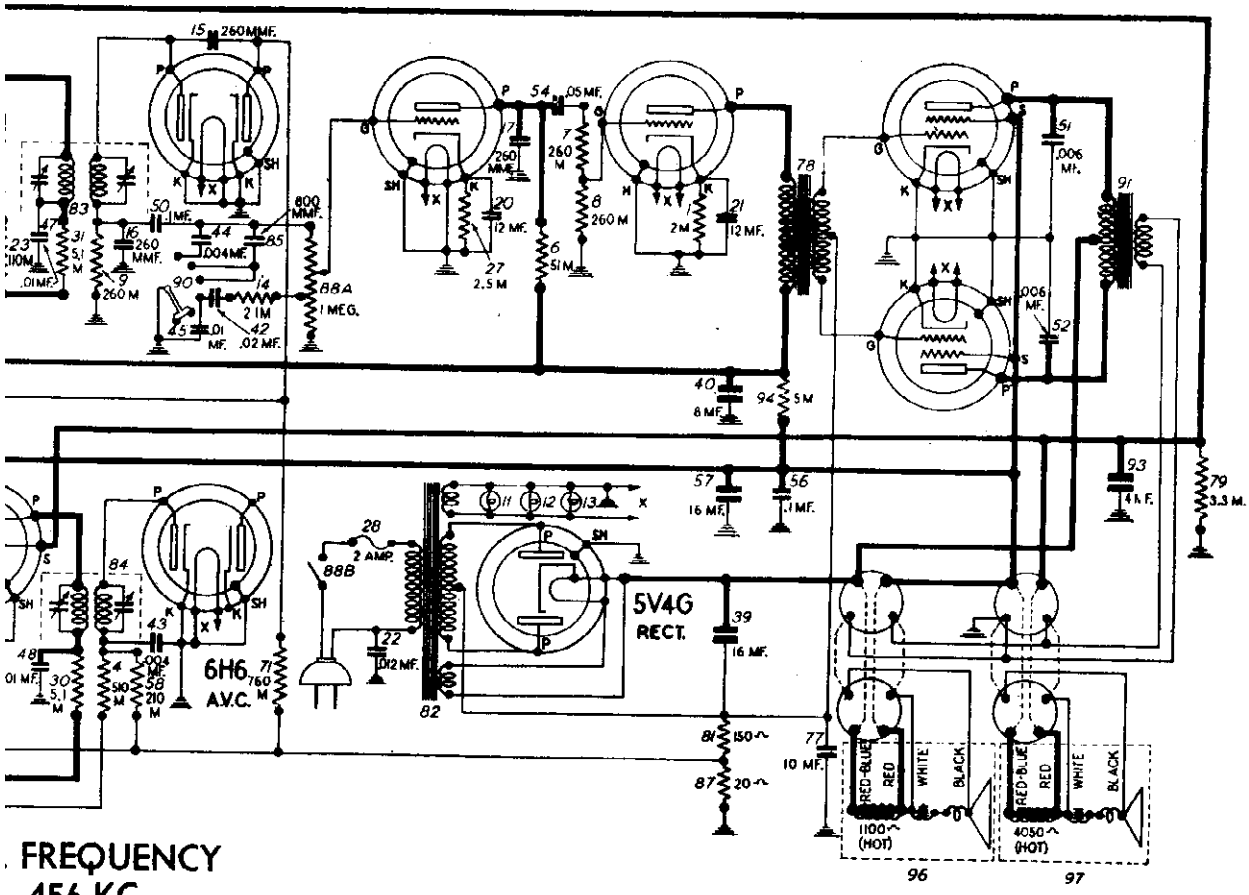

FREQUENCY
456 KC.

VOLUME CONTROL ON FULL
RANGE SWITCH SET ON BROADCAST POSITION

ANTENNA GROUNDED
SET TUNED TO 530 K. C.

IMPORTANT: Use a high resistance voltmeter of 1,000 ohms per volt.
NOTE A: —2.6 volts measured across resistor 87.

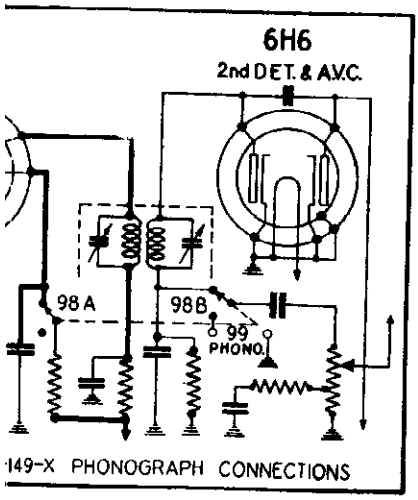

149-X PHONOGRAPH CONNECTIONS

BOTTOM VIEW OF CHASSIS

VOLTAGES MEASURED BETWEEN SOCKET TERMINALS AND CHASSIS
A.C. LINE VOLTAGE 115 VOLTS

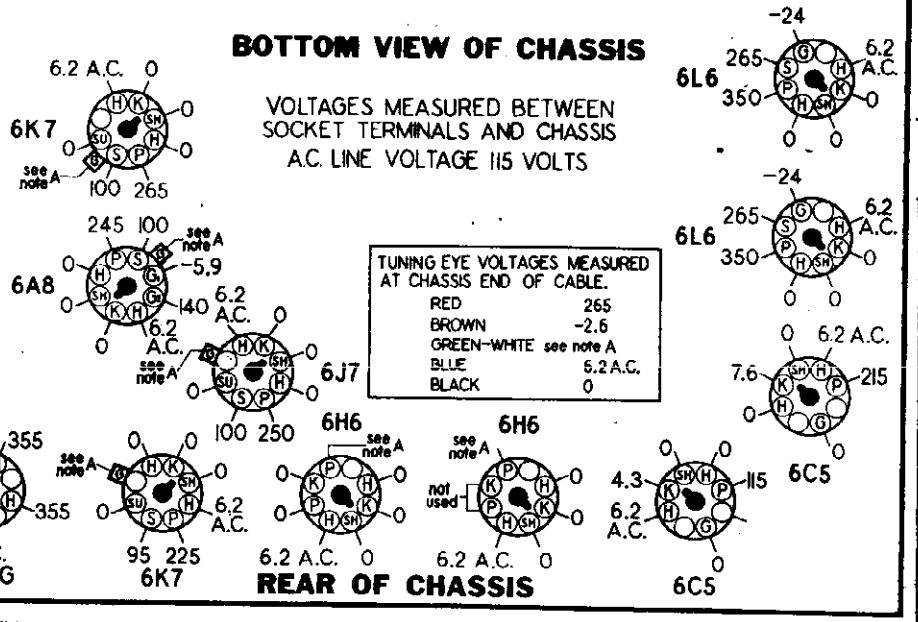

TUNING EYE VOLTAGES MEASURED AT CHASSIS END OF CABLE.	
RED	265
BROWN	-2.6
GREEN-WHITE see note A	
BLUE	6.2 A.C.
BLACK	0

REAR OF CHASSIS

R-149 CHASSIS

1491 to 1499

a 400 or 500 ohm carbon resistor in series with the oscillator output and the A terminal.

(b) Adjust the wave trap trimmer No. 7 for **minimum** output. Increase the oscillator output as necessary to obtain a clearly defined point of minimum output. If some particular station with a frequency slightly different than 456 KC. causes code interference, it may be advisable to adjust trimmer No. 7 on the actual frequency of the interfering station.

BROADCAST BAND CALIBRATION

4.(a) Check the position of the dial pointer on its shaft by turning the tuning knob until the rotor plates of the gang condenser are in full mesh. The slow-moving dial pointer should then coincide with the low frequency end of the dial scale. If it does not, hold the dial gear and turn the pointer to the correct position.

(b) Turn the range switch control to the broadcast position (second from the right).

(c) Connect a 400 or 500 ohm carbon resistor in series with the test oscillator output and the receiver antenna terminal. Note: This resistor should remain connected for all subsequent adjustments.

(d) Ground the receiver.

(e) Adjust the test oscillator to exactly 1500 KC.

(f) Tune in the 1500 KC. oscillator signal or a station above 1300 KC. on the dial and determine whether the dial calibration is correct at the high frequency end of the dial. If the calibration is correct, do not adjust the broadcast oscillator shunt trimmer No. 8. If the calibration is incorrect, adjust trimmer No. 8 to give proper calibration.

BROADCAST BAND ALIGNMENT

5. (a) With the test oscillator set at 1500 KC. tune the receiver to the signal for maximum output and adjust the broadcast antenna and detector shunt trimmers No. 9 and 10 for maximum output. Do not touch the oscillator shunt trimmer No. 8 as this will change the calibration.

(b) Adjust the test oscillator to exactly 600 KC. and tune the receiver to the signal. Adjust the broadcast oscillator series padder No. 11 for maximum output. Then try to increase the output by detuning the padder and retuning the receiver dial. If this reduces the output, detune the padder on the opposite direction. Continue detuning the padder and retuning the dial until a maximum output meter deflection is secured. This operation is commonly known as "rocking." The object of this adjustment is to find the combination of padder adjustment and tuning condenser position which gives the maximum output. This adjustment should not be changed regardless of whether the dial reads exactly 600 KC. or slightly off 600 KC. for maximum output.

(c) Check the adjustment of trimmers No. 8, 9 and 10 at 1500 KC.

POLICE BAND CALIBRATION

6. (a) Turn the range switch to the Band No. 3 (green) position (second from the left).

(b) Adjust the test oscillator to exactly 5.0 megacycles.

(c) Tune in the 5 MC. oscillator signal at or near 5 MC. on the receiver dial to determine whether the receiver dial calibration is correct at 5 MC. If it is, do not adjust police band oscillator shunt trimmer No. 12. If the calibration is incorrect, set the dial pointer to 5 MC. on the dial, and adjust the oscillator shunt trimmer No. 12 until the oscillator signal comes in at this point. If there are two peaks, the proper one is that with the trimmer screw farthest out.

POLICE BAND ALIGNMENT

7. (a) With the test oscillator set at 5.0 MC. tune the receiver for maximum output.

(b) Adjust the police band antenna and detector trimmers No. 13 and 14 for maximum output. After this is done try to increase the output meter reading by detuning the detector trimmer No. 14 slightly and retuning the receiver dial. If the output goes down, detune the trimmer in the opposite direction. Continue detuning No. 14 and retuning the set until maximum output meter deflection is secured. Then readjust No. 13.

SHORT WAVE BAND CALIBRATION

8. (a) Turn the range switch to the extreme left (counter-clockwise).

(b) Be sure that the D and G terminals on the antenna terminal strip are connected together.

(c) Adjust the test oscillator to exactly 16 megacycles.

(d) Tune in the 16 MC. oscillator signal at or near 16 MC. on the receiver dial to determine whether the receiver dial calibration is correct at 16 MC. If it is, do not adjust the short wave band oscillator shunt trimmer No. 15. If the calibration is incorrect, set the receiver dial pointer exactly at 16 MC. and adjust the oscillator shunt trimmer No. 15 until the oscillator signal comes in at this point.

(e) Check to see that trimmer No. 15 is adjusted to the proper peak by tuning the receiver to approximately 15.1 MC. If a repeat signal is not heard at this point, even with greatly increased oscillator output, retune the receiver to 16.0 MC. and adjust trimmer No. 15 to the proper peak with the trimmer screw farther out.

SHORT WAVE BAND ALIGNMENT

9. (a) With the test oscillator set at 16 MC. tune the receiver for maximum output.

(b) Adjust the short wave antenna and detector trimmers No. 16 and 17 for maximum output. After this is done, try to increase the output meter deflection by detuning the detector trimmer No. 17 slightly and retuning the receiver dial. If this causes the output to drop, detune the trimmer in the opposite direction. Continue detuning No. 17 and retuning the set until the output is at a maximum. Then readjust No. 16.

(c) Check the adjustment of No. 17 by tuning the receiver to the image at 15.1 MC. and noting if the image is much weaker than the 16 MC. signal. If the signal at 15.1 MC. dial setting is equal to or stronger than the 16 MC. signal, trimmer No. 17 is not set to the proper peak. Turn the trimmer in a turn or so, then readjust as in 9 (b).

LONG WAVE BAND CALIBRATION

10. (a) Turn the range switch to the extreme right position (clockwise).

(b) Adjust the test oscillator to exactly 350 KC.

(c) Turn the receiver dial pointer to 350 KC. on the tuning dial and adjust the long wave band oscillator shunt trimmer No. 18 for maximum output.

LONG WAVE BAND ALIGNMENT

11. (a) With the test oscillator set at 350 KC., tune the receiver to the signal for maximum output.

(b) Adjust the antenna and detector trimmers No. 19 and 20 for maximum output. Do not touch the oscillator trimmer No. 18 as this will change the calibration.

(c) Adjust the test oscillator to exactly 175 KC. and tune the receiver to the signal. Adjust the long wave oscillator series padder No. 21 for maximum output, then try to increase the output by detuning the padder No. 21 and retuning the receiver dial.

(d) Repeat adjustments of trimmers No. 18, 19 and 20 a 350 KC.

MISCELLANEOUS PARTS

Part Number	DESCRIPTION	List Price
67667	Flat steel mtg. washer	$ .01
67977	No. 14 x 1¼ chassis mtg. screw	.02
85066	G.D.A. terminal strip	.20
85578	Rubber chassis mtg. washer	.04
88056	Fuse mounting	.15
88057	Fuse cover	.08
88985	Tuning knob, front section	.20
88986	Tuning knob, rear section	.25
89038	Knob, volume control	.20
89081	Knob, range switch	.20
89115	Tuning indicator cable and plug	1.50
89267	Knob, selectivity control	.20
89268	Knob, tone control	.20

TUNING DRIVE AND DIAL PARTS

Part Number	DESCRIPTION	List Price
85902	Dual ratio planetary dial drive	$1.00
88839	Gear tension spring	.10
88958	No. 2 x ⅜ R.H.W. screw for escutcheon (each)	.01
88982	Compression spring for band indicator	.01
89027	Spring washer for planetary	.01
89072	Dial ring bracket and shaft assembly (for edge lighting)	2.50
89073	Split second shaft (band spread ratio 10 to 1) See part No. 89721	.20
89075	Main pointer gear and shaft assembly	.30
89078	Idler gear and pinion (band spread ratio 10 to 1) See part No. 89721	.25
89081	Driven disc and bushing	.65
89086	Compression spring for driven disc gear	.01
89092	Second pointer	.04
89093	Main pointer and stud	.10
89095	Spring washer (for pointer shaft)	.01
89100	Dial scale for rear lighting	2.80
89120	Band indicator and link assembly	.60
89132	Escutcheon and glass assembly	2.25
89283	Pilot lamp socket	.10
89284	Pilot lamp shield	.02
89308	Bracket and light bracket assem. (for idler gear)	.15
89311	Dial background (for edge lighting dials)	.12
89313	Dial scale for edge lighting	2.00
89485	Dial ring bracket and shaft assembly (for rear lighting)	2.40
89721	Idler gear and pinion (band spread ratio 12 to 1)	.45
89724	Split second shaft (band spread ratio 12 to 1)	.18
89799	Dial scale retaining clip	.02

PRICES SUBJECT TO CHANGE WITHOUT NOTICE

MODELS 61T, 61TB, 61L
61LB, 61W, 61WB

STROMBERG-CARLSON TEL. MFG. CO.

Schematic, Socket Trimmers, Voltage

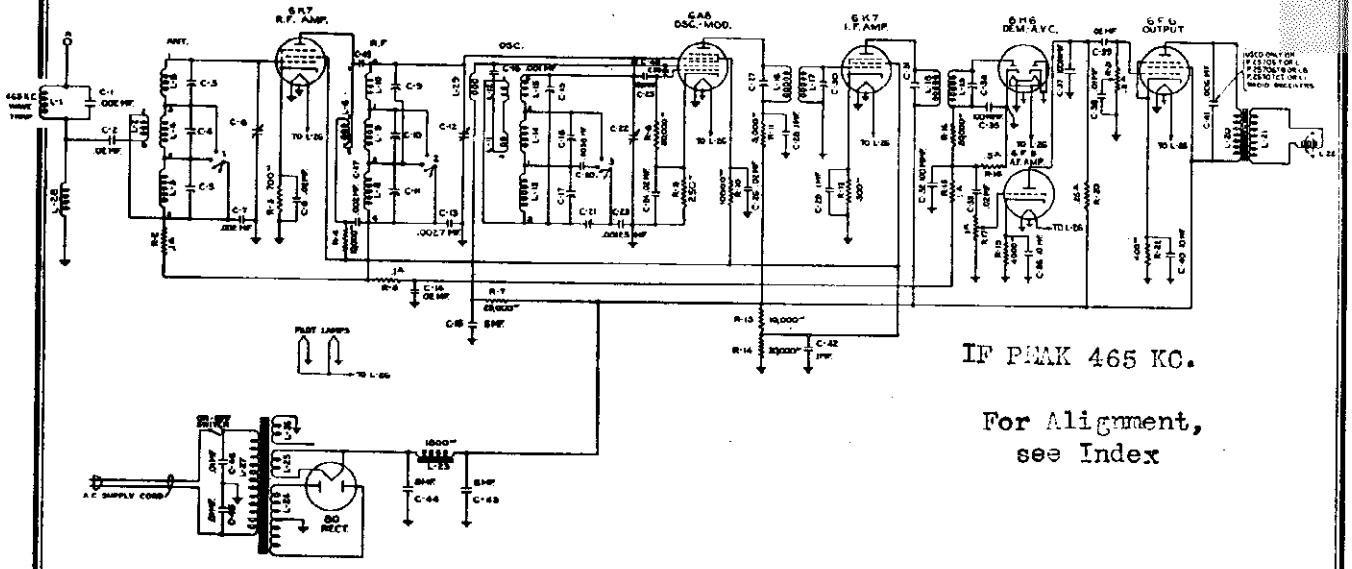

IF PEAK 465 KC.

For Alignment, see Index

Schematic Circuit of Receiver.

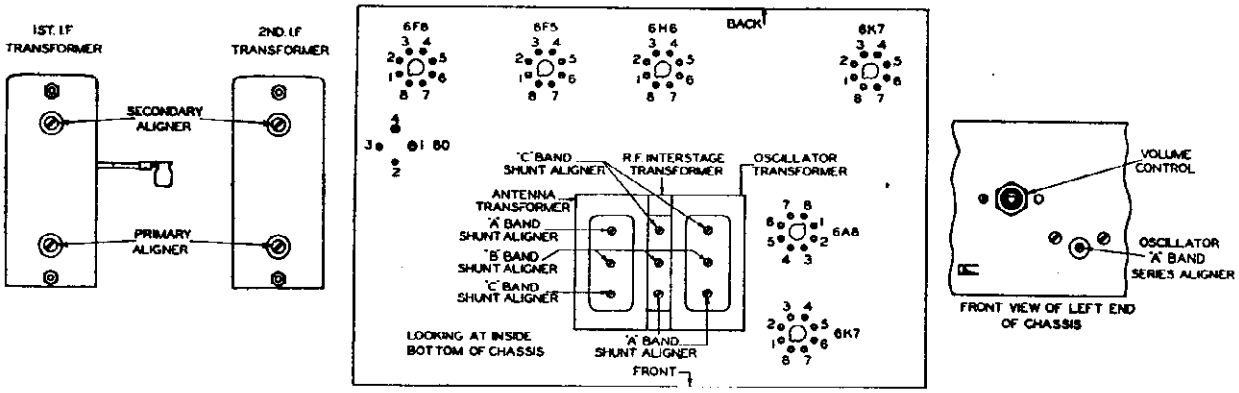

Terminal Layout for Voltage Measurement Chart and Location of the Various Aligning Capacitors.

Tube	*Circuit*	*Cap.*	*Terminals of Sockets* 1	2	3	4	5	6	7	8	*Heater Voltages Between Terminals Nos. at 120 Volts*
6K7	R. F. Amp.	0	0	0	+ 50	+100	+ 4.5	—	0	+ 4.5	2-7, *6.3* Volts
6A8	Osc.-Mod.	0	0	0	+220	+ 72	— 6	+160	0	+ 1.8	2-7, *6.3* Volts
6K7	I. F. Amp.	0	0	0	+235	+100	+ 3	—	0	+ 3	2-7, *6.3* Volts
6H6	Dem.—A.V. C.	—	0	0	0	0	— .5	—	0	0	2-7, *6.3* Volts
6F5	A. F. Amp.	0	0	0	—	+ 58	—	—	0	+ 1.2	2-7, *6.3* Volts
6F6	Output	—	0	0	+220	+235	0	—	0	+14	2-7, *6.3* Volts
80	Rectifier	—	+355	*335*	*335*	+355	—	—	—	—	1-4, *4.8* Volts

Set tuned to 1000 kc., no signal. A. C. voltages are indicated by italics.

APPARATUS SPECIFICATIONS

No. 61-T	50-60 Cycles	P-25705 Chassis; P-25464 Loud Speaker
No. 61-TB	25-60 Cycles	P-25706 Chassis; P-25464 Loud Speaker
No. 61-L	50-60 Cycles	P-25705 Chassis; P-25464 Loud Speaker
No. 61-LB	25-60 Cycles	P-25706 Chassis; P-25464 Loud Speaker
No. 61-W	50-60 Cycles	P-25795 Chassis; P-25601 Loud Speaker
No. 61-WB	25-60 Cycles	P-25796 Chassis; P-25601 Loud Speaker

©John F. Rider, Publisher

MODELS 61T, 61TB, 61L
61LB, 61W, 61WB

STROMBERG-CARLSON TEL. MFG. CO.

Chassis Wiring

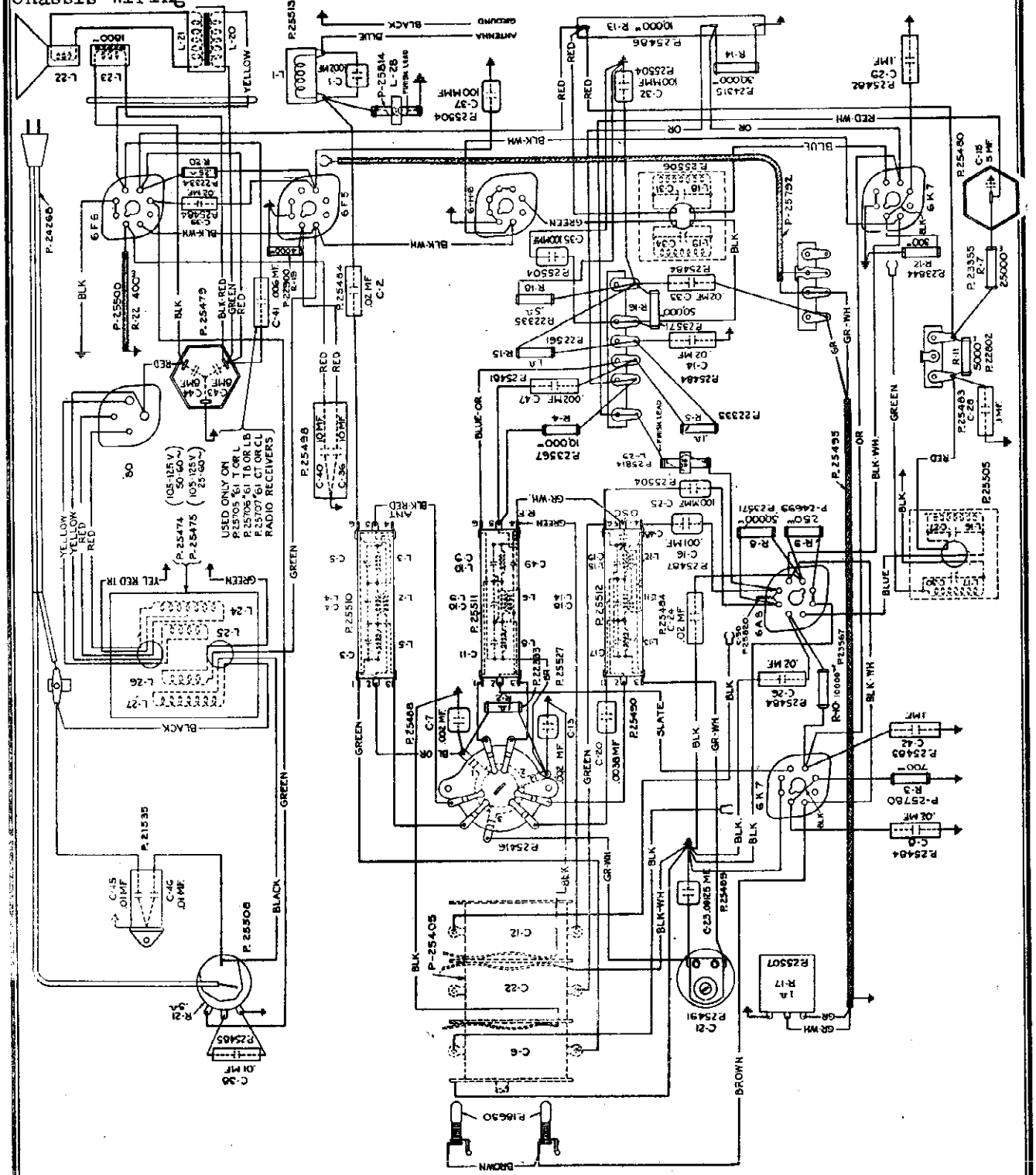

Type of Circuit	Superheterodyne
Tuning Ranges	A—540 to 1500 kc.; B—1450 to 3500 kc.; C—5600 to 18,000 kc.
Number and Type of Tubes	2 No. 6K7, 1 No. 6A8, 1 No. 6H6, 1 No. 6F5, 1 No. 6F6, 1 No. 80
Voltage Rating	105 to 125 Volts
Frequency Rating	25-60 Cycles and 50-60 Cycles
Wattage Rating	60 Watts
Intermediate Frequency	465 Kc.

©John F. Rider, Publisher

MODELS 61Y, 61Z

STROMBERG-CARLSON TEL. MFG. CO.

Schematic, Socket Trimmers, Voltage

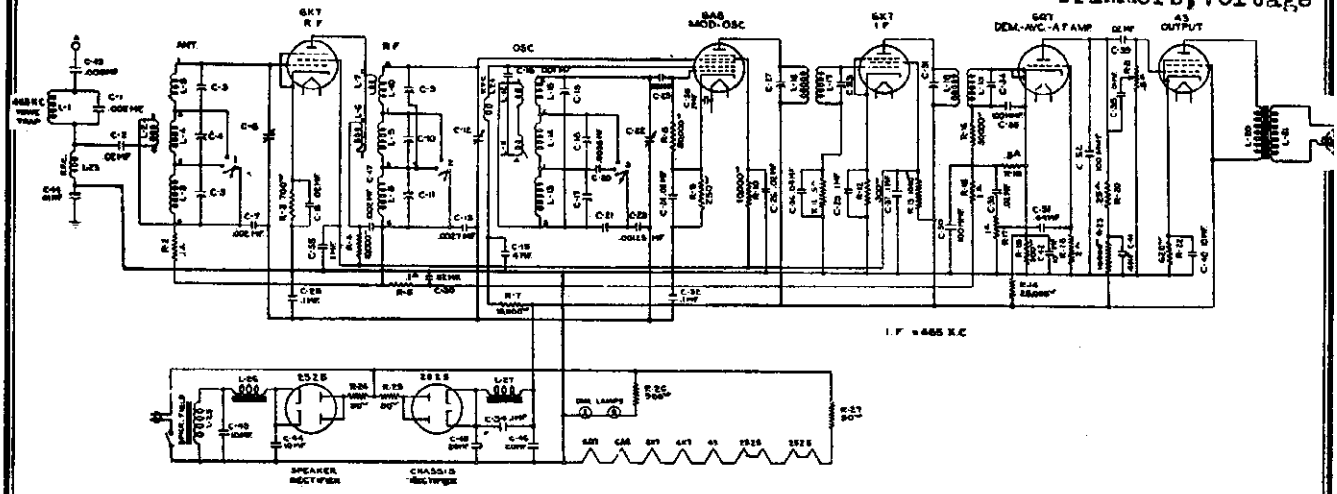

Schematic Circuit of Receiver.

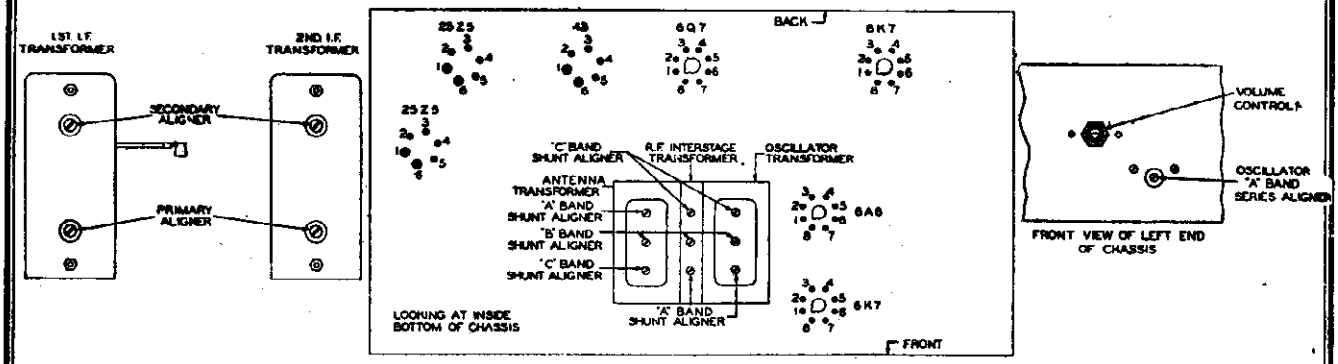

For Alignment see Index

Terminal Layout for Voltage Measurement Chart and Location of the Various Aligning Capacitors.

TUBE	CIRCUIT	CAP.	TERMINALS OF SOCKETS 1	2	3	4	5	6	7	8	Heater Voltages Between Heater Terminals: Terminal Nos.	Volts
6K7	R. F. Amp.	0	0	19	+ 45	+110	+ 5	0	+13	+5	2-7	6.0
6A8	Mod.—Osc.	0	0	6	+117	+ 52	— 4	+90	+13	+2	2-7	6.0
6K7	I. F. Amp.	0	0	26	+120	+110	+ 3	—	19	+3	2-7	6.0
6Q7	Dem.—A. V. C. —Audio	0	0	0	30	0	0	0	6	+1	2-7	6.0
43	Output	—	26	+112	+120	0	+14	51	—	—	1-6	26
25Z5	Chassis Rectifier	—	76	115	+135	+135	115	51	—	—	1-6	26
25Z5	Speaker Rectifier	—	76	114	+117	+117	114	101	—	—	1-6	26

Voltage across pilot lamps—27 volts

APPARATUS SPECIFICATIONS

61-Y.....50-60 Cycles (For AC Operation).....P-25919 Chassis; P-25896 Loud Speaker
61-Z.....50-60 Cycles (For AC Operation).....P-25919 Chassis; P-25896 Loud Speaker

©John F. Rider, Publisher

MODELS 61Y,61Z
Chassis Wiring

STROMBERG-CARLSON TEL. MFG. CO.

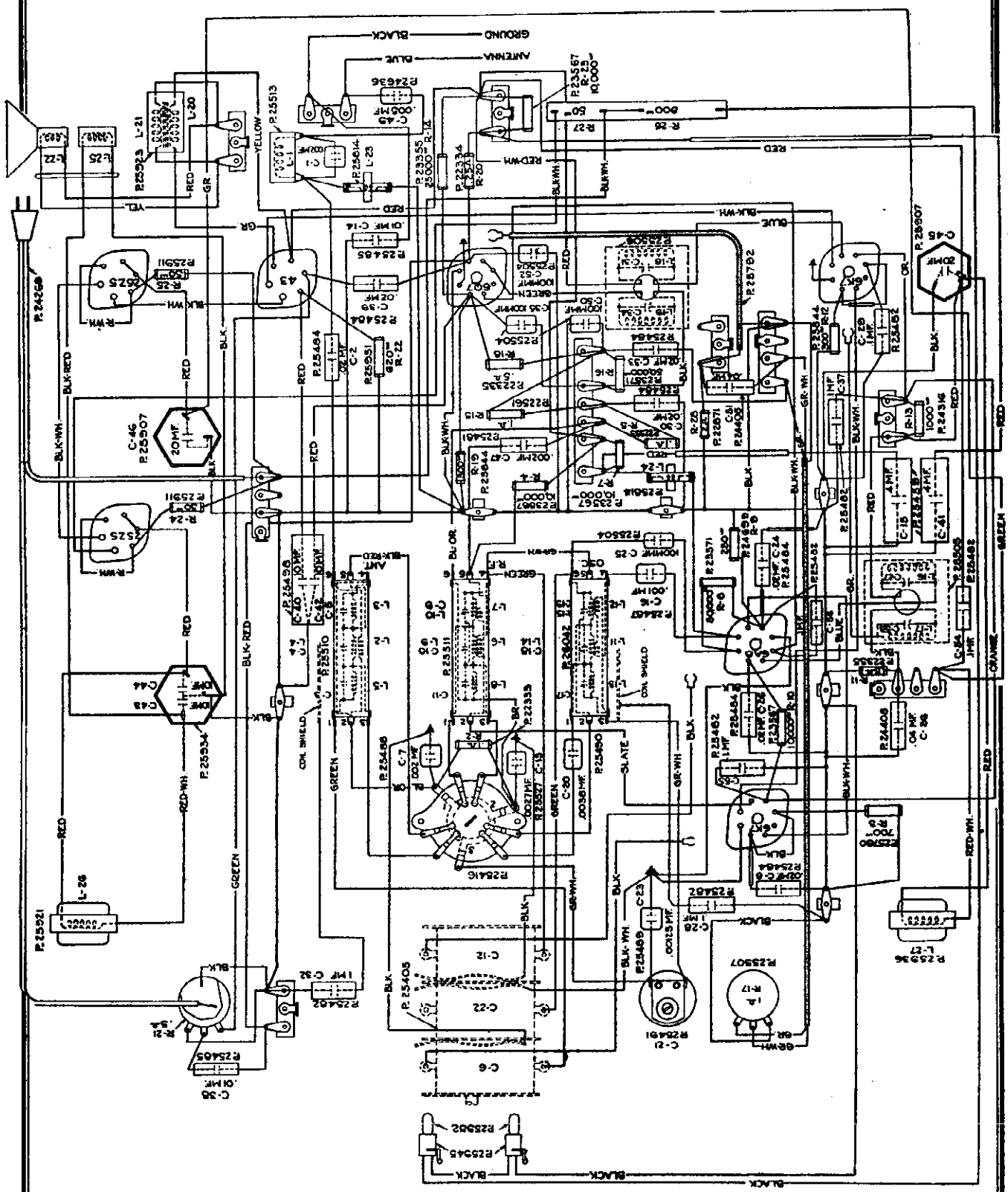

Type of Circuit	Superheterodyne
Tuning Ranges	A—540 to 1500 kc.; B—1450 to 3500 kc.; C—5600 to 18,000 kc.
Number and Types of Tubes	2 No. 6K7, 1 No. 6A8, 1 No. 6Q7, 1 No. 43, 2 No. 25Z5
Voltage Rating	105 to 125 Volts, AC or DC
Frequency Rating (For AC Operation)	50-60 Cycles
Wattage Rating	65 Watts
Intermediate Frequency	465 Kilocycles

©John F. Rider, Publisher

STROMBERG-CARLSON TEL. MFG. CO

MODELS 65,66,67
Schematic, Socket Voltage

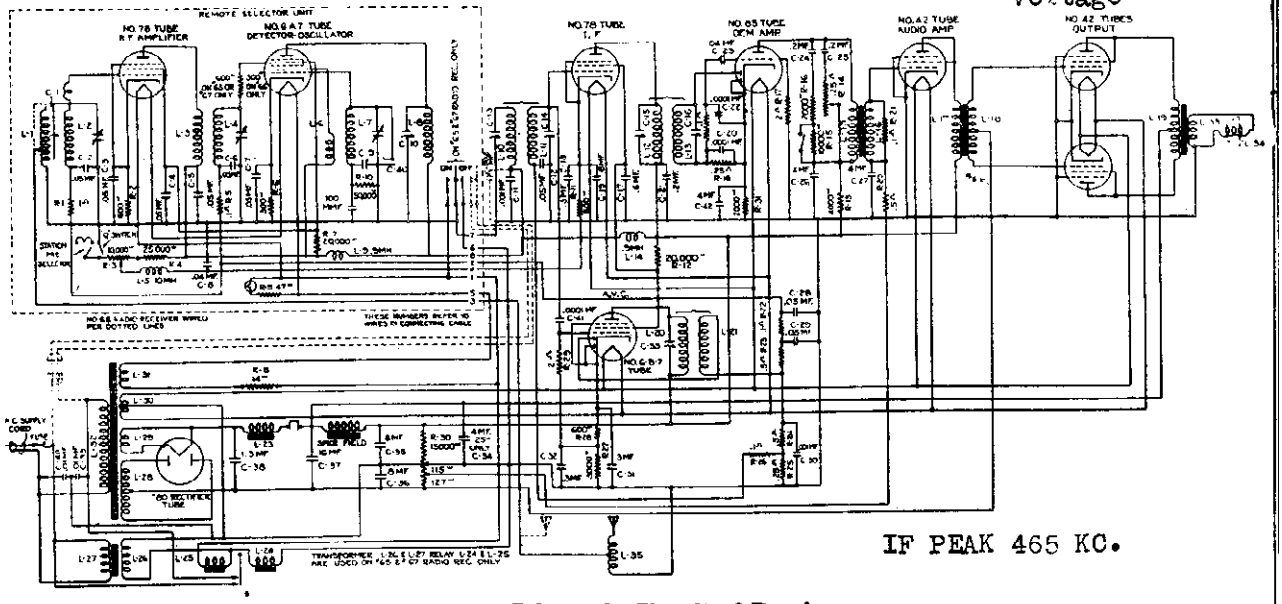

Schematic Circuit of Receiver.

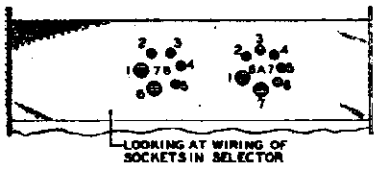

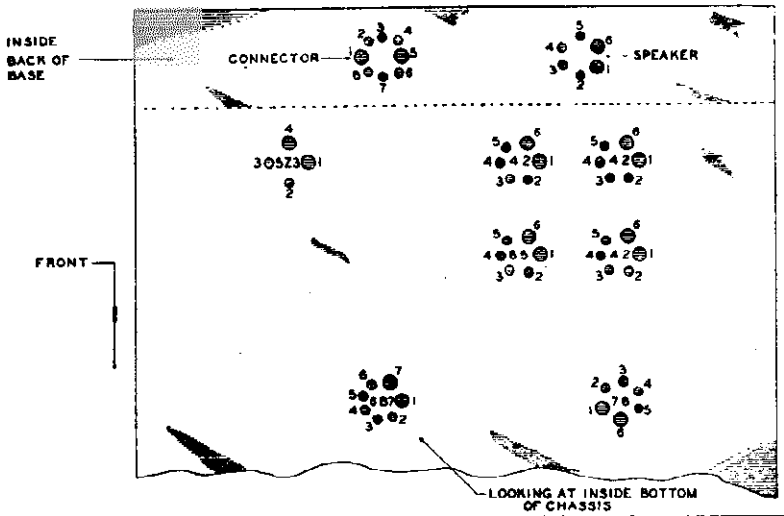

Terminal Layout of Sockets for Voltage test.

Tube	Circuit	Cap.	Terminals of Sockets 1	2	3	4	5	6	7	A.C. Meter for Heater Voltages Between Terminal Nos.
78	R. F. Amp.	0		+200	+100	+ 3	+ 3			1–6—*6.5* volts
6A7	Mixer-Osc.			+200	+100	+200	— 11	+ 3		1–7—*6.5* volts
78	I. F.			+180	+ 75	+ 2	+ 2			1–6—*6.5* volts
6B7	I. F. Dem.			+180	+ 75	0	+ 12	+ 12		1–7—*6.5* volts
85	1st Audio			+180	0	+ 13	+ 13			1–6—*6.5* volts
42	2nd Audio			+170	+170	— 16	0			1–6—*6.5* volts
42's	Outputs			+345	+345	— 32	0			1–6—*6.5* volts
5Z3	Rectifier		A. C. voltage between plate terminals and chassis base	*500*	*500*					1–4—*4.8* volts
Speaker Socket			0	+193	+350	+350	+350	0		

A. C. voltages are indicated by italics. Additional voltages may be measured directly across the proper terminals.

©John F. Rider, Publisher

MODELS 65,66,67
Chassis Wiring

STROMBERG-CARLSON TEL. MFG. CO.

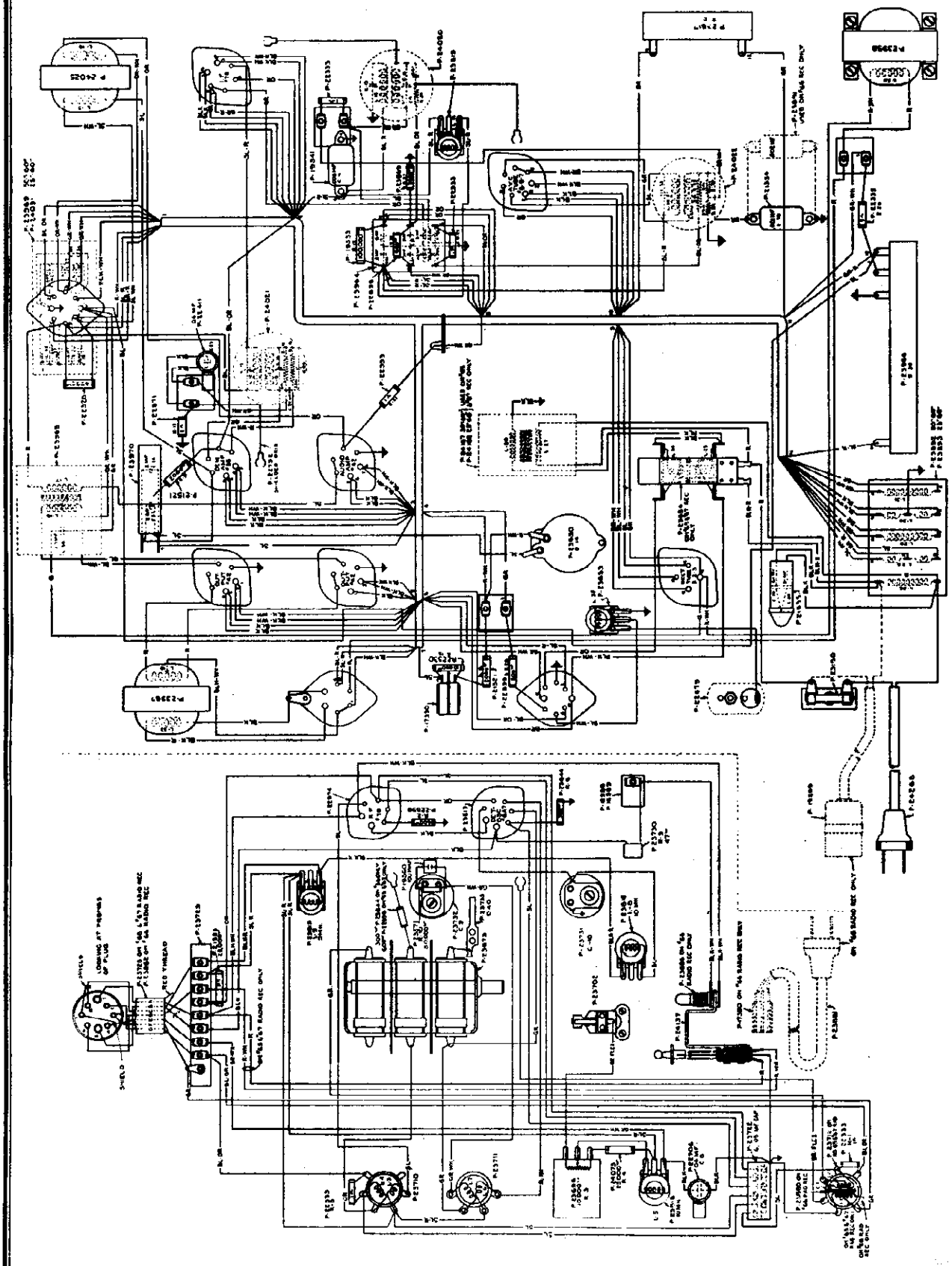

©John F. Rider, Publisher

STROMBERG-CARLSON TEL. MFG. CO.

MODEL 80
Schematic, Voltage

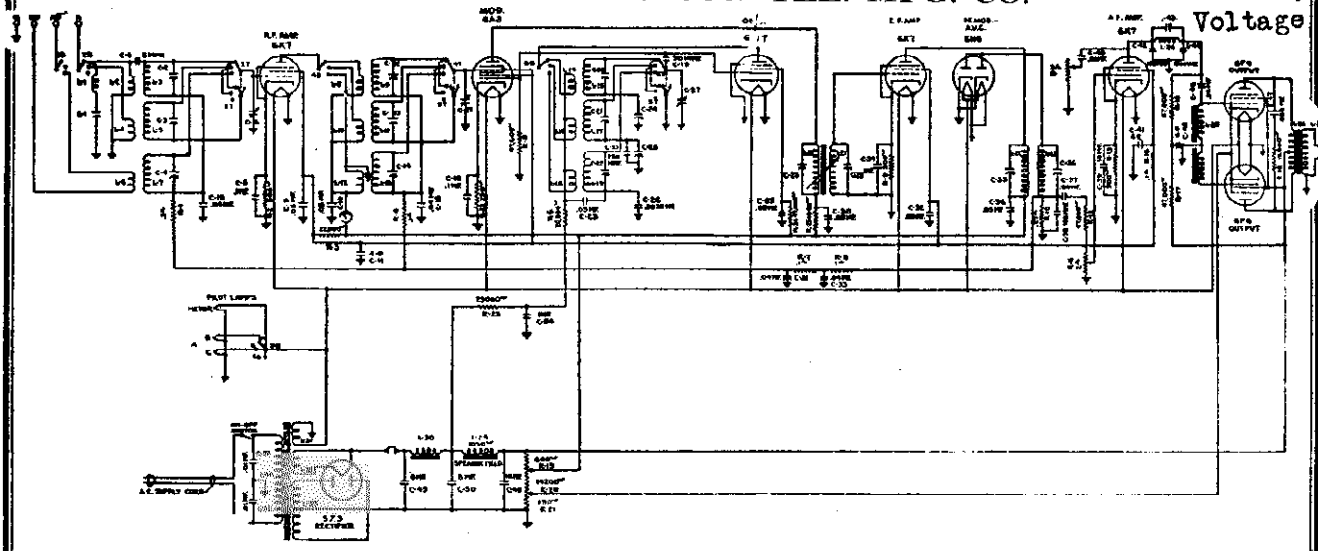

Schematic Circuit of Receiver.

Tube	Circuit	Cap	Terminals of Sockets 1	2	3	4	5	6	7	8	Heater Voltages Between Terminal Nos. at 120 Volts
6K7	R. F. Amp.	0	0	—	+242	+ 96	+3.4	—	—	+ 3.4	2-7, *6.3* Volts
6A8	Mod.	0	0	—	+245	+ 96	— 13	+ 96	—	+ 1.6	2-7, *6.3* Volts
6J7	Osc.	0	0	—	+165	+125	0	—	—	—	2-7, *6.3* Volts
6K7	I. F. Amp.	0	0	—	+244	+ 95	+3.2	—	—	—	2-7, *6.3* Volts
6H6	Dem.—A.V. C.	—	0	—	0	0	0	0	—	—	2-7, *6.3* Volts
6K7	A. F. Amp.	0	0	—	+ 35	+ 25	+1.5	—	—	+ 1.5	2-7, *6.3* Volts
6F6	Output	—	0	—	+260	+270	—	—	0	+16	2-7, *6.3* Volts
5Z3	Rectifier	—	+426	*405*	*405*	+426					1-4, *4.8* Volts
Speaker Socket			+260	+403	+425	+425	+265	+260			

Set tuned to 1000 kc., no signal. A. C. voltages are indicated by italics.

Type of Circuit ..... Superheterodyne
Tuning Ranges ..... A—.54 to 1.7 megacycles; B—1.7 to 5.4 megacycles; C—5.4 to 18 megacycles
Number and Types of Tubes ..... 3 No. 6K7, 1 No. 6A8, 1 No. 6J7, 1 No. 6H6, 2 No. 6F6, 1 No. 5Z3
Voltage Rating ..... 105 to 125 Volts
Frequency Rating ..... 50-60 Cycles
Wattage Rating ..... 105 Watts
Intermediate Frequency ..... 465 Kc.

APPARATUS SPECIFICATIONS

No. 80 Receiver ..... 50-60 Cycles ..... P-25908 Chassis; P-25687 Loud Speaker

CIRCUIT DESCRIPTION

Nine tubes, A. C. operated, Superheterodyne receiver employing metal tubes and having three tuning ranges. These three tuning ranges cover all the important broadcasts and special service bands of both American and Foreign stations. These receivers are also equipped with a high fidelity control providing high fidelity reception by means of a special band widener device and a Carpinchoe high fidelity speaker. See P-25924 Installation and Operating Instructions, for properly installing and operating the No. 80 Receiver.

The various tubes in this receiver are used as follows: One of the No. 6K7 tubes functions as an R. F. Amplifier, another No. 6K7 tube is used in the I. F. Amplifier Stage, and the other No. 6K7 tube operates as an Audio Driver tube. The No. 6A8 tube is used as a Modulator. The No. 6J7 tube is used as the Oscillator tube. The No. 6H6 tube is used as a Demodulator-Automatic Volume Control tube. The audio power output stage uses the two No. 6F6 tubes, and the No. 5Z3 tube is used as the rectifier in the power supply unit.

©John F. Rider, Publisher

MODEL 80
Chassis Wiring

STROMBERG-CARLSON TEL. MFG. CO.

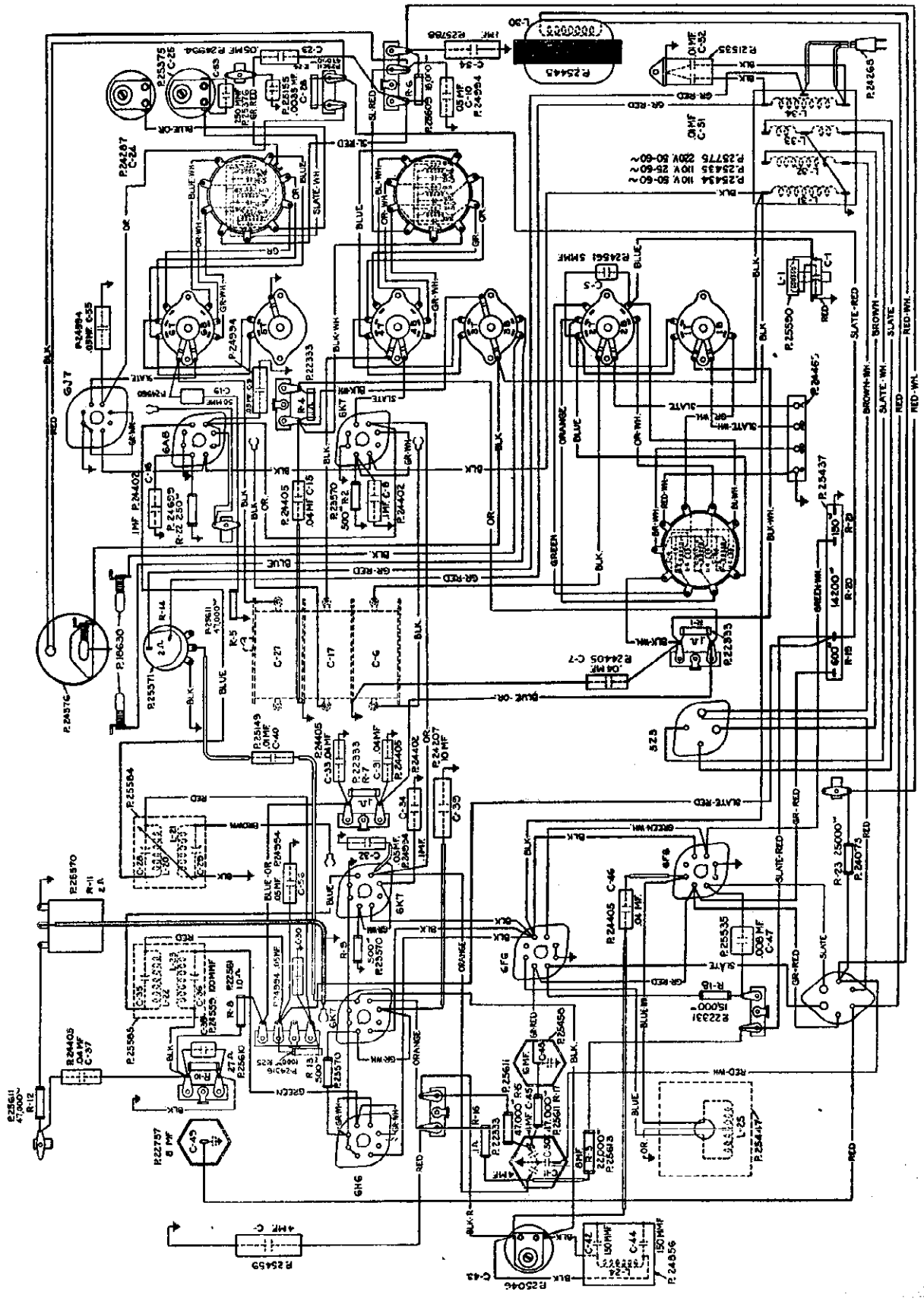

©John F. Rider, Publisher

Parts List

MODEL 80

STROMBERG-CARLSON TEL. MFG. CO.

Socket, Trimmers

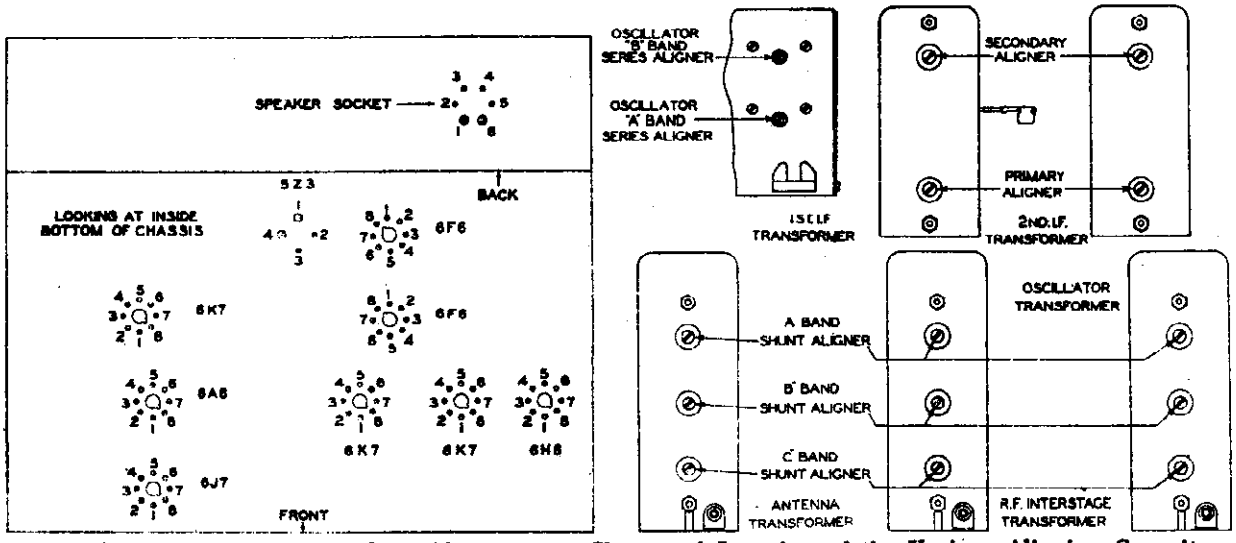

Fig. 1. Terminal Layout for Voltage Measurement Chart and Location of the Various Aligning Capacitors. CAUTION—Never Attempt to Align Receiver with Fidelity Control Set At Any Position Other Than the Maximum Counter-Clockwise Position.

REPLACEMENT PARTS

Piece Number	Part	Description	Required Per Receiver
P-24465	Binding Post	Antenna and Ground	1
P-25746	Bracket	Fidelity Control	1
P-25464	Capacitor	Aligning	1
P-25819	Capacitor	Aligning	1
P-24287	Capacitor	Aligning	1
P-25373	Capacitor	Aligning	1
P-25046	Capacitor	Aligning	1
P-22752	Capacitor	Aligning	1
P-22707	Capacitor	Electrolytic	1
P-25457	Capacitor	Electrolytic	1
P-25458	Capacitor	Electrolytic	1
P-25459	Capacitor	Electrolytic	1
P-24207	Capacitor	Electrolytic	1
P-25788	Capacitor	Electrolytic	1
P-21535	Capacitor	Two, .01 MF.	1
P-24402	Capacitor	.1 MF.	3
P-24405	Capacitor	.04 MF.	6
P-24904	Capacitor	.05 MF.	8
P-25149	Capacitor	.01 MF.	1
P-25155	Capacitor	.0035 MF.	1
P-25535	Capacitor	.008 MF.	1
P-24561	Capacitor	5 MMF.	1
P-24560	Capacitor	50 MMF.	1
P-24559	Capacitor	100 MMF.	1
P-25376	Capacitor	250 MMF.	1
P-25054	Capacitor	150 MMF.	8
P-25785	Coil	2.3 MH.	1
P-25909	Coil	Antenna	1
P-25910	Coil	R. F.	1
P-25939	Coil	Oscillator	
P-25915	Coil	.5 MH.	1
P-25445	Coil	Choke	1
P-24268	Cord	A.C.	1
P-25582	Dial and Drive		1
P-24856	Filter Assembly	Audio Cut-Off Filter	1
P-25590	Filter Assembly	Antenna Wave Trap	1
P-24416	Knob	Large	
P-22891	Knob	Small	
P-18630	Lamp	Pilot	
P-25747	Lever	Fidelity Control	1
P-24376	Meter	Visual Tuning	1
P-25570	Potentiometer	Volume Control	1
P-25571	Potentiometer	Tone Control and "On-Off" Switch	1
P-25600	Resistor	18,000 ohms Type C	1
P-22383	Resistor	.1 megohm Type D	4
P-25610	Resistor	.27 megohm Type D	1
P-25570	Resistor	500 ohms Type D	3
P-25611	Resistor	47 000 ohms Type D	6
P-25561	Resistor	1 megohm Type D	1
P-22831	Resistor	15 000 ohms Type C	1
P-25613	Resistor	22 000 ohms Type F	1
P-24316	Resistor	1,000 ohms Type D	1
P-24022	Resistor	250 ohms Type B	1
P-24073	Resistor	25 000 ohms Type B	1
P-25487	Resistor	"B" Voltage Divider	1
P-25687	Speaker Assembly	High Fidelity Loud Speaker	1
P-25539	Socket	Tube—8 Prong	8
P-25040	Socket	Tube—6 Prong	1
P-22088	Socket	Tube—4 Prong	1
P-25748	Shaft Assembly	Fidelity Control	1
P-25745	Shoulder Screw	Fidelity Control	1
P-21806	Shoulder Screw	Fidelity Control	1
P-25472	Switch Assembly	Frequency Range	1
P-25434	Transformer	Power, 50-60 Cycles, 110 Volts	1
P-25447	Transformer	Audio Power	1
P-25688	Transformer	Audio Power Output	1
P-25584	Transformer	Audio 1st I. F.	1
P-25585	Transformer	Audio 2nd I. F.	1

©John F. Rider, Publisher

Two dummy antennas are necessary. For most practical cases a 250-mmf. condenser connected in series with the high side of the signal generator can be used for the standard broadcast band. A suitable dummy antenna for the short-wave bands may consist of a small non-inductive carbon resistor of 400 ohms value; this latter dummy antenna replaces the former when making short-wave adjustments.

The locations of the various trimmers of the sets mentioned above will be found in the servicing data in Rider's Volume VI. *The i-f peak of each receiver is 465 kc.*

Always align either the r-f. or i-f. circuits (on those sets which are equipped with high-fidelity circuits and controls) with the high-fidelity control set at maximum counter-clockwise position (normal fidelity), unless the alignment is being checked at the high-fidelity setting as specified in the following instructions:

(The use of a cathode-ray oscillograph is recommended for alignment purposes by the manufacturer, although the instructions can be followed when a meter or glow type indicator is used.

Before proceeding with the alignment, connect the "high" terminal of the output indicator to the output of the demodulator circuit.

In Models 58 and 61, this connection should be made at the junction of R-15, R-18, and C-33.

In Models 62 and 63, this connection should be made at the junction of R-10, L-29, and C-37.

In Models 82 and 83, this connection should be made at the junction of R-12, L-29, and C-46.

In Model 84, this connection should be made at the junction of R-14, L-30, and C-47.

Connect the chassis to the other terminal of the indicator. Connect a 0.001-mf. condenser in series with the high side of the signal generator and the control grid of the 6K7 i-f. amplifier tube. Connect the other terminal of the signal generator to the chassis. Set the range switch of the set to the "A" band position and tune the set to highest frequency setting shown on the dial for this band. Tune the signal generator to 465 kc., the i-f. peak, and keep its output as low as consistent with proper output indications on either the oscillograph or meter.

Adjust the trimmers across the secondary and primary windings of the second i-f. transformer, in the order given, until maximum deflection is obtained on the output indicator.

Feed a frequency modulated signal to the same grid as stated above and adjust the trimmers for maximum output.

Change the input lead from the grid of the 6K7 tube to the control grid of the 6A8 modulator tube. Adjust the trimmers of the primary and secondary coils of the first i-f. transformer, adjusting the latter first for maximum output. Check the alignment of the second transformer and then recheck that of the first.

Check the alignment of the i-f. circuits with the fidelity control set at the maximum high fidelity position (maximum clockwise).

R-f. Circuits Alignment:

Have the On-Off switch set to "Off." (This switch is located in the rear of those chassis which have a "Q" circuit). On receivers equipped with a high-fidelity control, make sure that this is set for normal fidelity (maximum counter-clockwise). See that the tone control is at normal and that the volume control is set at maximum (maximum clockwise).

"A" Band Alignment:

Set range switch on chassis to "A" position. Set the receiver and the signal generator to the particular high-frequency setting called for in the table below, for this band, of the receiver being aligned. Adjust the shunt aligning condensers of the oscillator, r-f. amplifier, and antenna transformers in the order given until maximum output is obtained.

Set the receiver and signal generator to the particular low frequency called for in the table, and align only the oscillator by means of the oscillator series padder. *Align only the oscillator at this frequency.*

Recheck the adjustments of the shunt, trimmers of the oscillator, r-f. amplifier and antenna transformers.

"B" Band Alignment:

Operate the range switch on the chassis to the "B" position and align the oscillator, r-f. amplifier, and antenna transformers in the same manner as was done in the "A" band, using the frequencies listed in the table below under the "B" band.

"C" and "D" Bands Alignment:

Operate the range switch to the "C" band and follow the same procedure as in the "B" band. After this is completed, then change to the "D" band and follow the same procedure, using in each case the frequencies as set forth in the table below for the respective bands.

Models 58 and 61:

Band	*High-Frequency Aligning Point*	*Aligning Frequency for Oscillator Series Padder*
"A"	1400 kc.	600 kc.
"B"	3000 kc.	No Aligner
"C"	16 mc.	No Aligner

Align the bands in the following order: "C," "B" and then "A."

Models 62 and 63:

Band	*High-Frequency Aligning Point*	*Aligning Frequency for Oscillator Series Padder*
"A"	1500 kc.	600 kc.
"B"	5000 kc.	1800 kc.
"C"	16 mc.	No Aligner

Align the bands in the following order: "A," "B," and then "C."

Models 82, 83, and 84:

Band	*High-Frequency Aligning Point*	*Aligning Frequency for Oscillator Series Padder*
"A"	1500 kc.	600 kc.
"B"	4000 kc.	1500 kc.
"C"	10 mc.	4 mc.
"D"	19.8 mc.	No Aligner

Align the bands in the following order: "A," "B," "C," and "D."

©John F. Rider, Publisher

MODELS 84,84-B
Schematic,Voltage

STROMBERG-CARLSON TEL. MFG. CO.

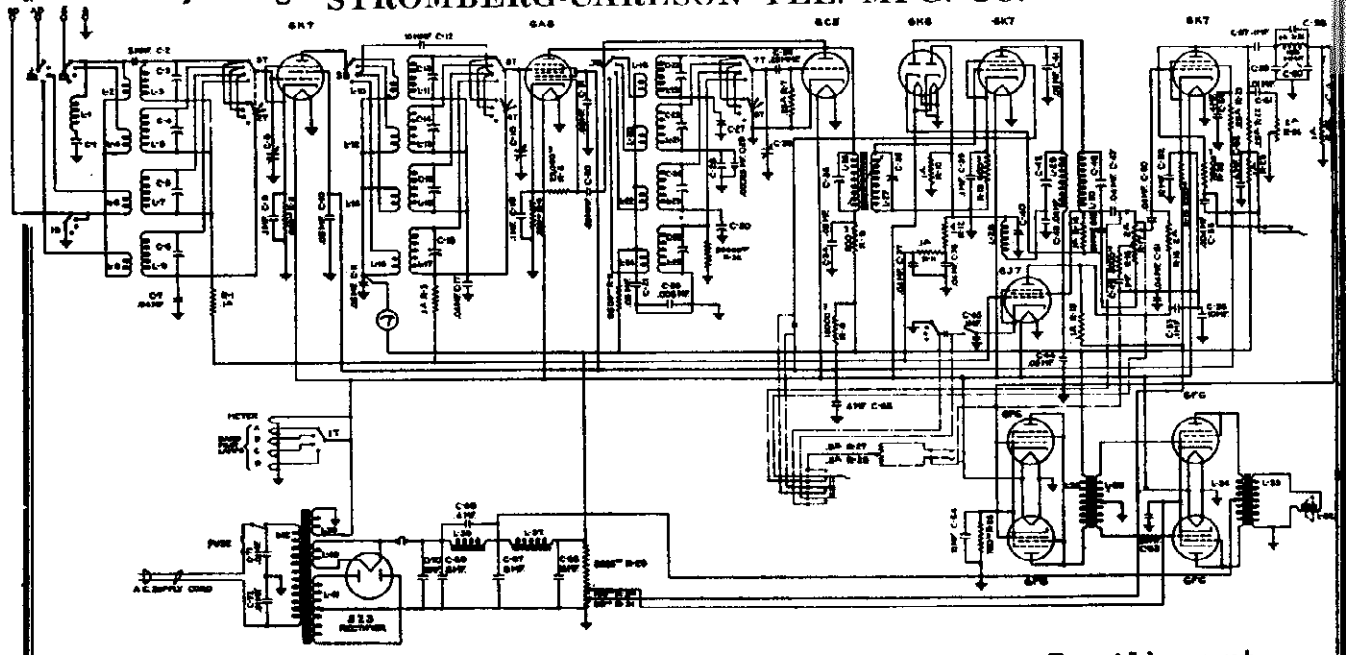

Schematic Circuit of Receiver.

For Alignment, see Index

Tube	Circuit	Cap.	Terminals of Sockets 1	2	3	4	5	6	7	8	Heater Voltages Between Terminals Nos. at 120 Volts
6K7	R. F. Amp.	0	0	—	+240	+ 90	+ 3.5	0	—	+ 3.5	2-7, *6.3 Volts*
6A8	Mod.	0	0	—	+240	+ 85	—	+ 85	—	+ 2	2-7, *6.3 Volts*
6C5	Osc.	—	0	—	+195	—	—	—	—	—	2-7, *6.3 Volts*
6K7	I. F. Amp.	0	0	—	+230	+ 85	+ 3.5	—	—	+ 3.5	2-7, *6.3 Volts*
6H6	Dem.—A.V. C.	—	0	—	—	—	—	—	—	—	2-7, *6.3 Volts*
6K7	1st Audio	0	0	—	+100	+ 35	+ 10	—	—	+10	2-7, *6.3 Volts*
6J7	"Q"	0	0	—	—	—	—	—	—	—	2-7, *6.3 Volts*
6F6	2nd Audio	—	0	—	+220	+220	0	—	—	+20	2-7, *6.3 Volts*
6F6	Output	—	0	—	+390	+390	0	—	—	+30	2-7, *6.3 Volts*
5Z3	Rectifier	—	+410	*395*	*395*	+410					1-4, *4.75 Volts*
Speaker Socket			0	+250	+410	+410	+ 395	0			

Set tuned to 1000 kc., no signal: A. C. voltages are indicated by italics.

ELECTRICAL SPECIFICATIONS

Type of Circuit ..... Superheterodyne
Tuning Ranges ..... A—520 to 1600 kc.; B—1500 to 4200 kc.; C—3.7 to 10 megacycles; D—8.5 to 23 megacycles
Number and Type of Tubes ..... 3 No. 6K7, 1 No. 6A8, 1 No. 6C5, 1 No. 6H6, 1 No. 6J7, 4 No. 6F6, 1 No. 5Z3
Voltage Rating ..... 105 to 125 Volts
Frequency Rating ..... 25-60 Cycles and 50-60 Cycles
Wattage Rating ..... 150 Watts
Intermediate Frequency ..... 465 Kc.

APPARATUS SPECIFICATIONS

No. 84 Receiver ..... 50-60 Cycles ..... P-22725 Chassis; P-25683 Loud Speaker
No. 84-B Receiver ..... 25-60 Cycles ..... P-22726 Chassis; P-25683 Loud Speaker

©John F. Rider, Publisher

MODELS 84,84-B
Chassis Wiring

STROMBERG-CARLSON TEL. MFG. CO.

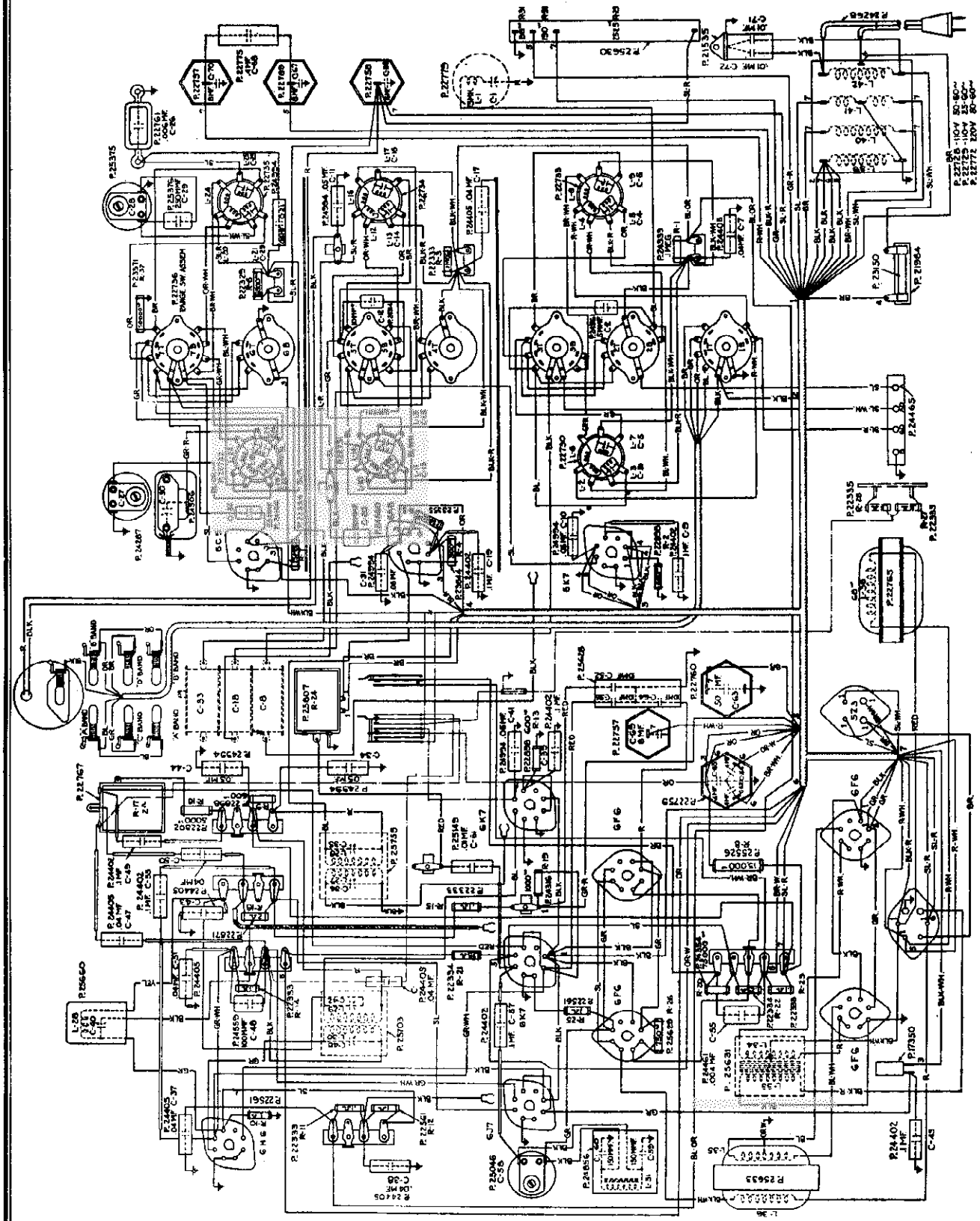

Chassis Assembly.

©John F. Rider, Publisher

Circuit Data
Trimmers

STROMBERG-CARLSON TEL. MFG. CO.

MODELS 84,84-B
Chassis Views

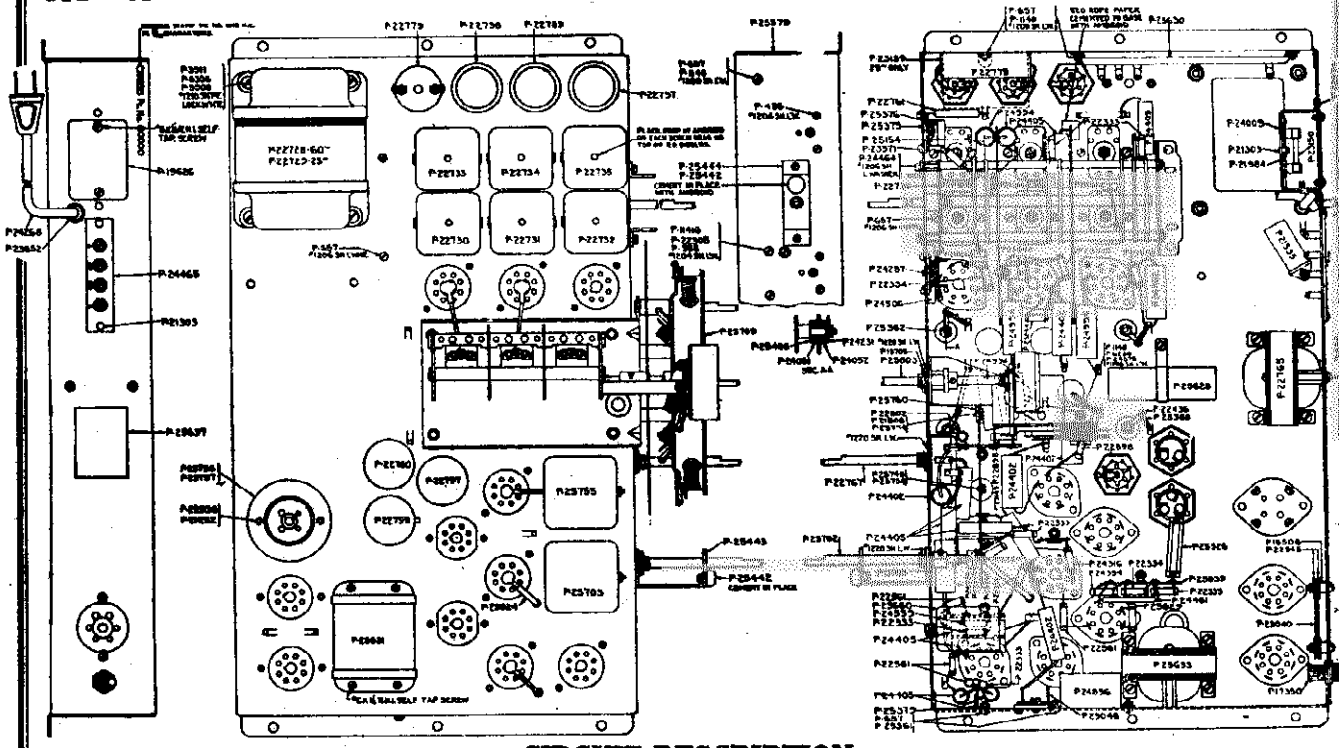

CIRCUIT DESCRIPTION

Twelve tubes, A. C. operated, Deluxe High Fidelity, Superheterodyne receiver employing metal tubes and having four tuning ranges. These four tuning ranges cover all the important broadcasts and special service bands of both American and Foreign stations. High fidelity is obtained in this receiver by its design as a complete high quality reproducing system including the receiver chassis which has a special band widener device; a Carpinchoe high fidelity speaker and treatment of the enclosing cabinet by means of the new revolutionary Stromberg-Carlson development for a sound reproducing system. This new device, the Acoustical Labyrinth (patent applied for) extends the bass response, provides reproduction only from the front of the cabinet and eliminates all cabinet resonance. Audio reproduction is further improved by employing sound diffusing vanes in front of the loud speaker opening which breaks up the directional high frequencies, thereby providing excellent reproduction in all parts of the room by spreading out these directional frequencies. See P-25826 Installation and Operating Instructions, for properly installing and operating this receiver.

The tubes used in this receiver are as follows: One No. 6K7 tube functions as an R. F. Amplifier, another No. 6K7 tube is used in the I. F. Amplifier Stage and the other No. 6K7 tube operates in the First Audio Stage. The No. 6A8 tube is used as the Modulator tube. The No. 6C5 tube is used as the Oscillator tube. The No. 6H6 tube is used as a Demodulator-Automatic Volume Control tube. The No. 6J7 tube is used in the Interstation Noise Suppressing (Q) Circuit. Two of the No. 6F6 tubes are connected in parallel and operate as the Audio Drive tubes. The other two No. 6F6 tubes operate in push-pull in the audio power output stage. The No. 5Z3 tube is the rectifier tube of the power supply unit.

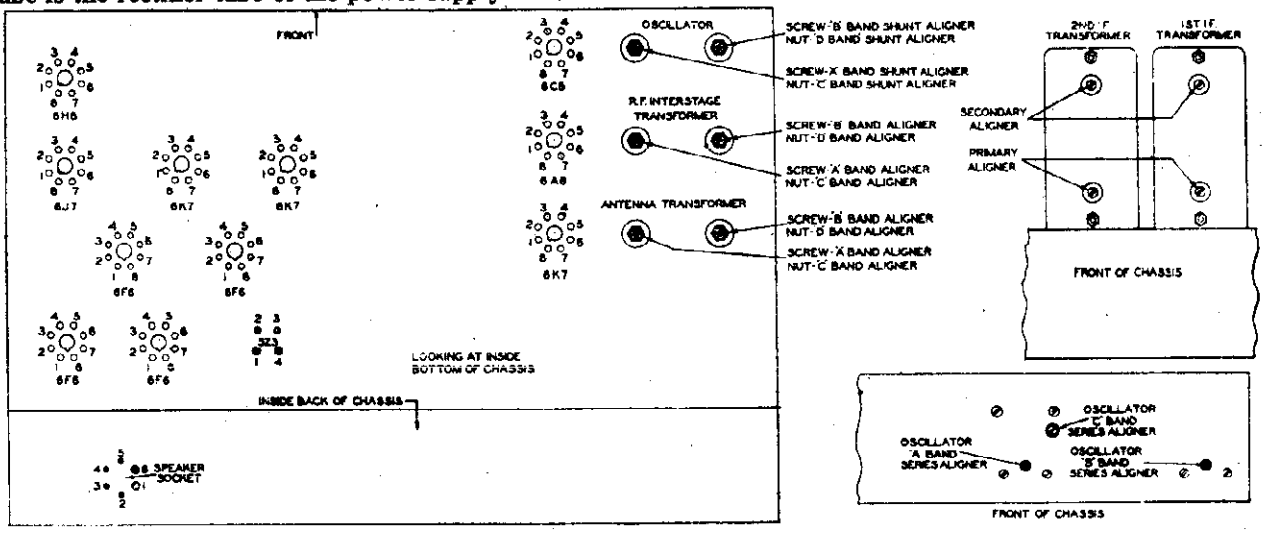

Fig. 1. Terminal Layout for Voltage Measurement Chart and Location of the Various Aligning Capacitors. CAUTION—Never Attempt to Align Receiver With Fidelity Control Set At Any Position Other Than the Maximum Counter-Clockwise Position.

©John F. Rider, Publisher

MODEL 115 — Trimmers, Voltage
Schematic, Socket

STROMBERG-CARLSON TEL. MFG. CO.

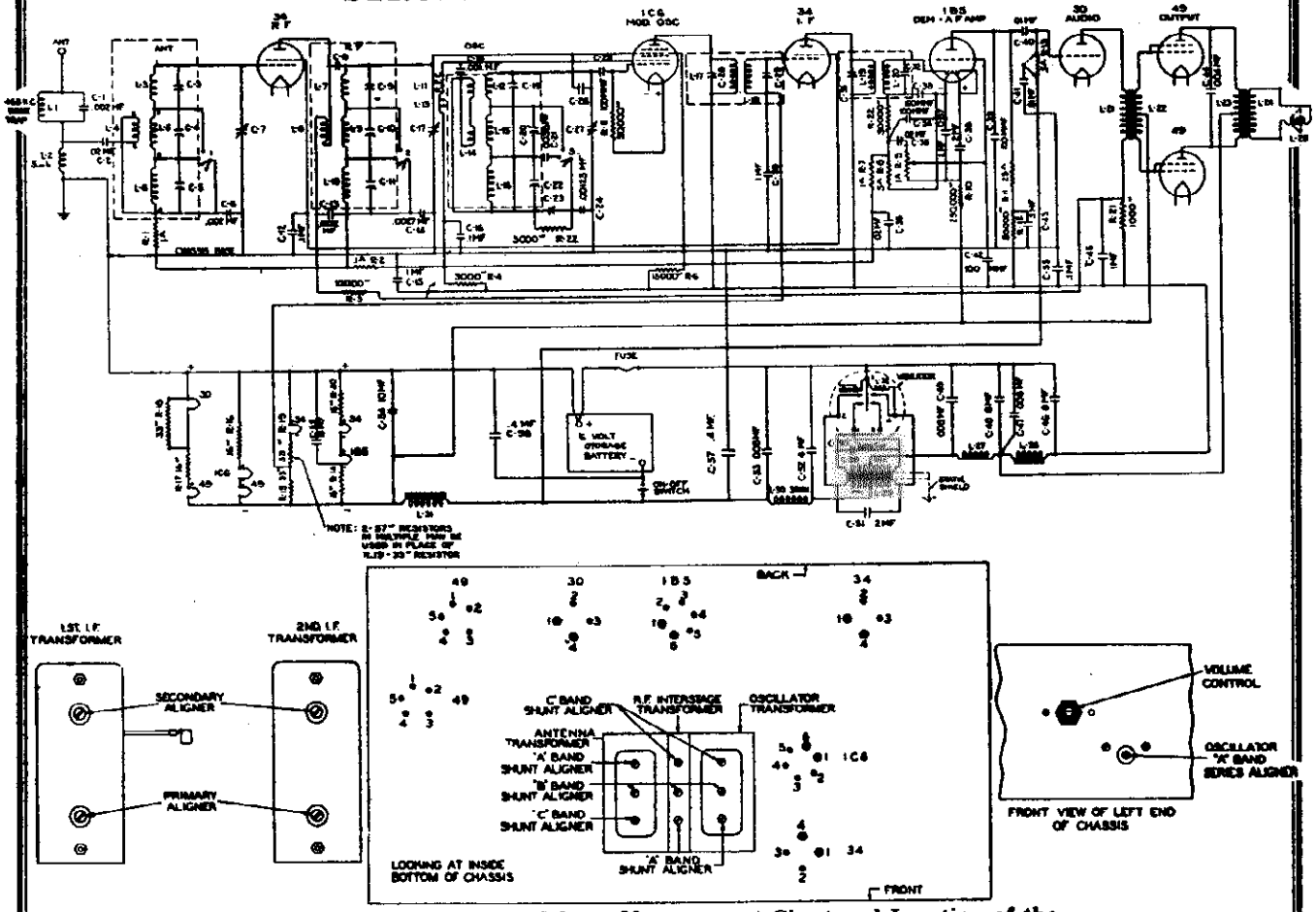

Terminal Layout for Voltage Measurement Chart and Location of the Various Aligning Capacitors.

APPARATUS SPECIFICATIONS

Chassis	P-25992
Loud Speaker	P-25994
Vibrator "B" Power Unit	P-25993
Type of Circuit	Superheterodyne
Tuning Ranges	A—540 to 1500 kc.; B—1450 to 3500 kc.; C—5600 to 18,000 kc.
Number and Types of Tubes	2 No. 34, 1 No. 1C6, 1 No. 1B5, 1 No. 30, 2 No. 49
Voltage Rating	5.7 to 6.8 Volts
Normal Current Consumption	7.8 Watts at 6 Volts Input
Intermediate Frequency	465 Kc.

TUBE	*CIRCUIT*	*CAP.*	*TERMINALS OF SOCKETS* 1	2	3	4	5	6	*Filament Voltages Between Filament Terminals* *Terminal Nos.*	*Volts*
34	R. F. Amp.	—.15	—0.9	+ 86	+ 62	—2.8	—	—	1-4	1.8
1C6	Mod.-Osc.	—.37	—1.9	+132	+117	—6.4	+ 62	—3.8	1-6	1.95
34	I. F. Amp.	—3.6	—1.8	+130	+ 63	0	—	—	1-4	1.85
1B5	Demod.-A. V. C. —Audio	—	—2.7	+ 30	—2.7	—1.3	—1.6	—4.7	1-6	2.0
30	Audio	—	—1.9	+117	—.05	0	—	—	1-4	1.88
49	Power Output	—	—3.8	+145	—5.6	—5.6	—5.8	—	1-5	2.0

Receiver tuned to 1000 kc., no signal, volume control set at minimum.

©John F. Rider, Publisher

MODEL 115

STROMBERG-CARLSON TEL. MFG. CO.

Chassis Wiring

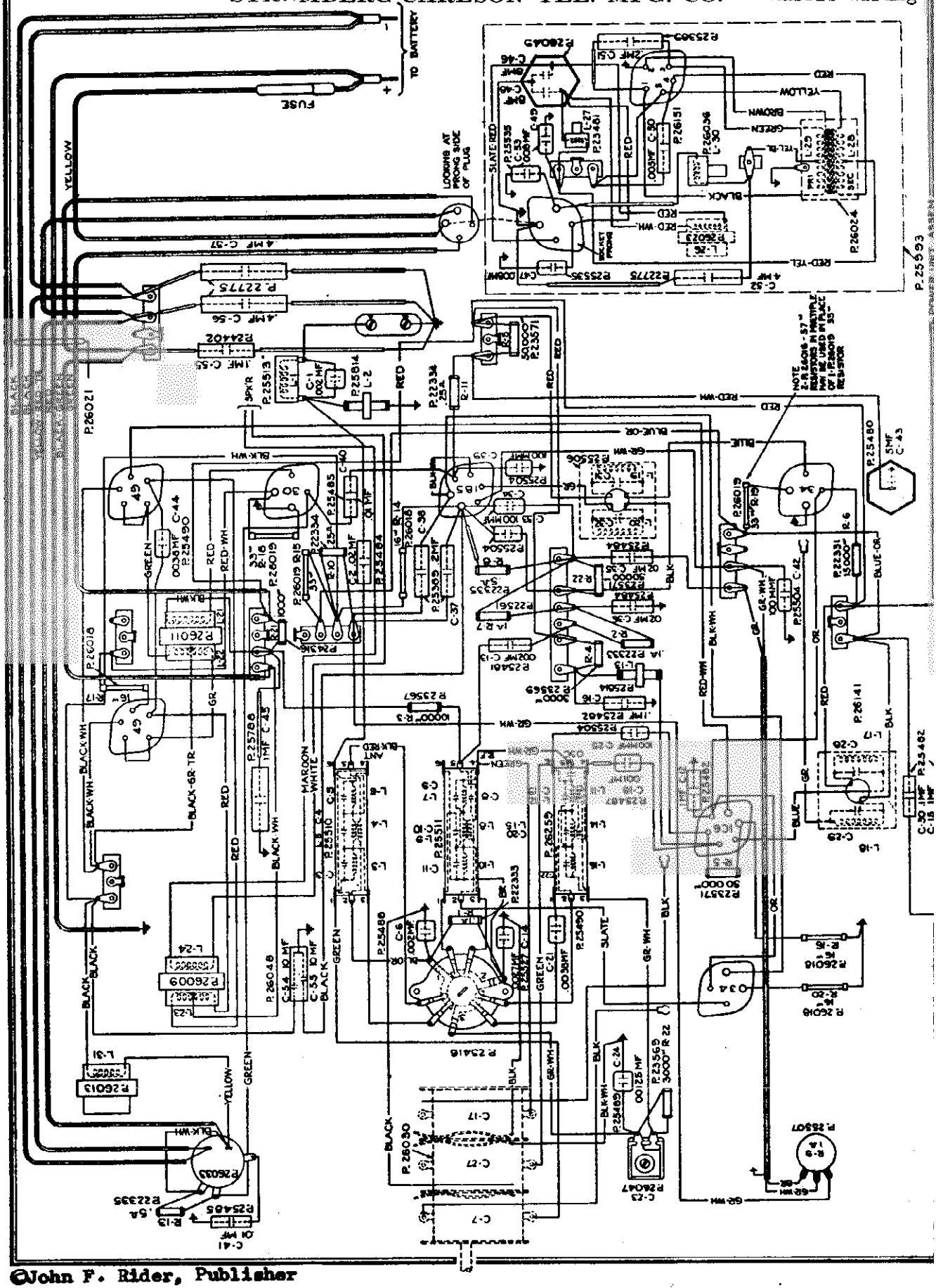

©John F. Rider, Publisher

MODEL 125 AC-DC
Schematic, Socket

STROMBERG-CARLSON TEL. MFG. CO.

Trimmers, Voltage

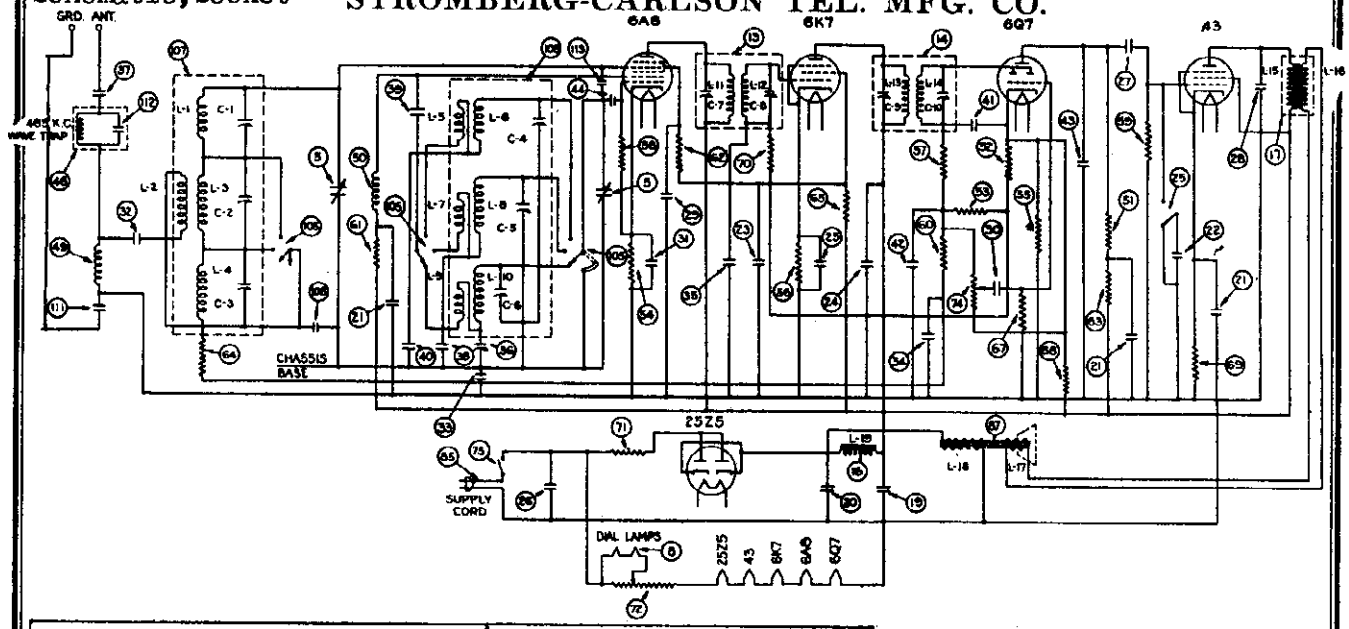

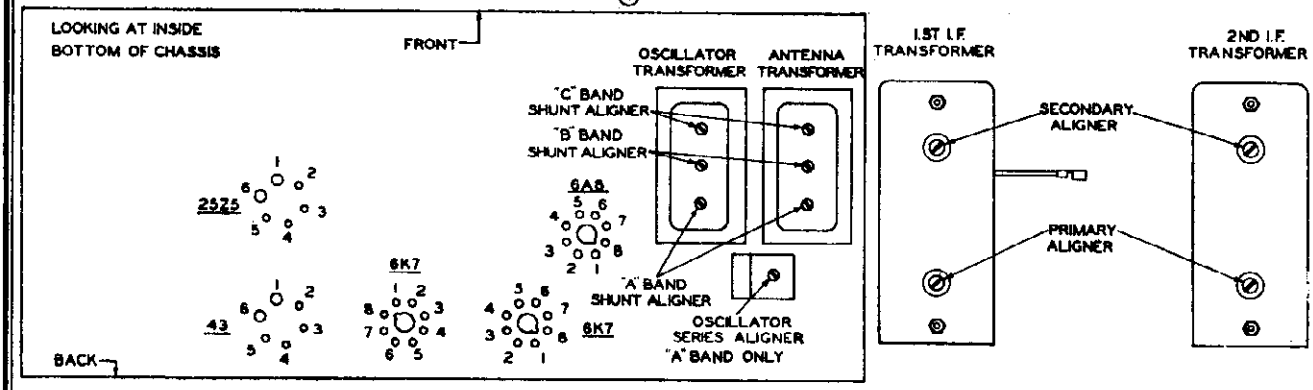

Terminal Layout for Voltage Measurement Chart and Location of the Various Aligning Capacitors.

Tube	*Circuit*	*Cap.*	*Terminals of Sockets* 1	2	3	4	5	6	7	8	*Heater Voltages Between Heater Terminals* *Terminal Numbers*	*Volts*
6A8	Mod.—Osc.	—.02	*125*	0	+ 97	+ 60	— 7	+73	*6.3*	+1.3	2-7	*6.3*
6K7	I. F. Amp.	0	*125*	0	+ 97	+ 91	+ 3	—	*18*	+3	2-7	*6.3*
6Q7	Dem.—A.V.C. —Audio	0	0	0	+55*	0	0	—	*6.2*	+1	2-7	*6.3*
43	Audio Output	—	*43*	+ 90	+ 96	0	+ 12	*18*	—	—	1-6	*24*
25Z5	Rectifier	—	*65*	*112*	+102	+102	*112*	*43*	—	—	1-6	22

Voltage across pilot lamps—*8.2* volts

A.C. voltages are indicated by italics; when the receiver is operated from a D.C. power supply, D.C voltages will be obtained in place of the A.C. voltages.
Receiver tuned to 1000 kc., no signal.

Type of Circuit ..... Superheterodyne
Tuning Ranges ..... A—540 to 1500 Kc.; B—1450 to 3500 Kc.; C—5600 to 18,000 Kc.
Number and Types of Tubes ..... 1 No. 6A8, 1 No. 6K7, 1 No. 6Q7, 1 No. 43, 1 No. 25Z5
Voltage Rating ..... 105 to 125 Volts
Power Frequency (For AC Operation) ..... 50-60 Cycles
Input Power Rating ..... 45 Watts
Intermediate Frequency ..... 465 Kilocycles

©John F. Rider, Publisher

MODEL 125 AC-DC
Chassis Wiring

STROMBERG-CARLSON TEL. MFG. CO.

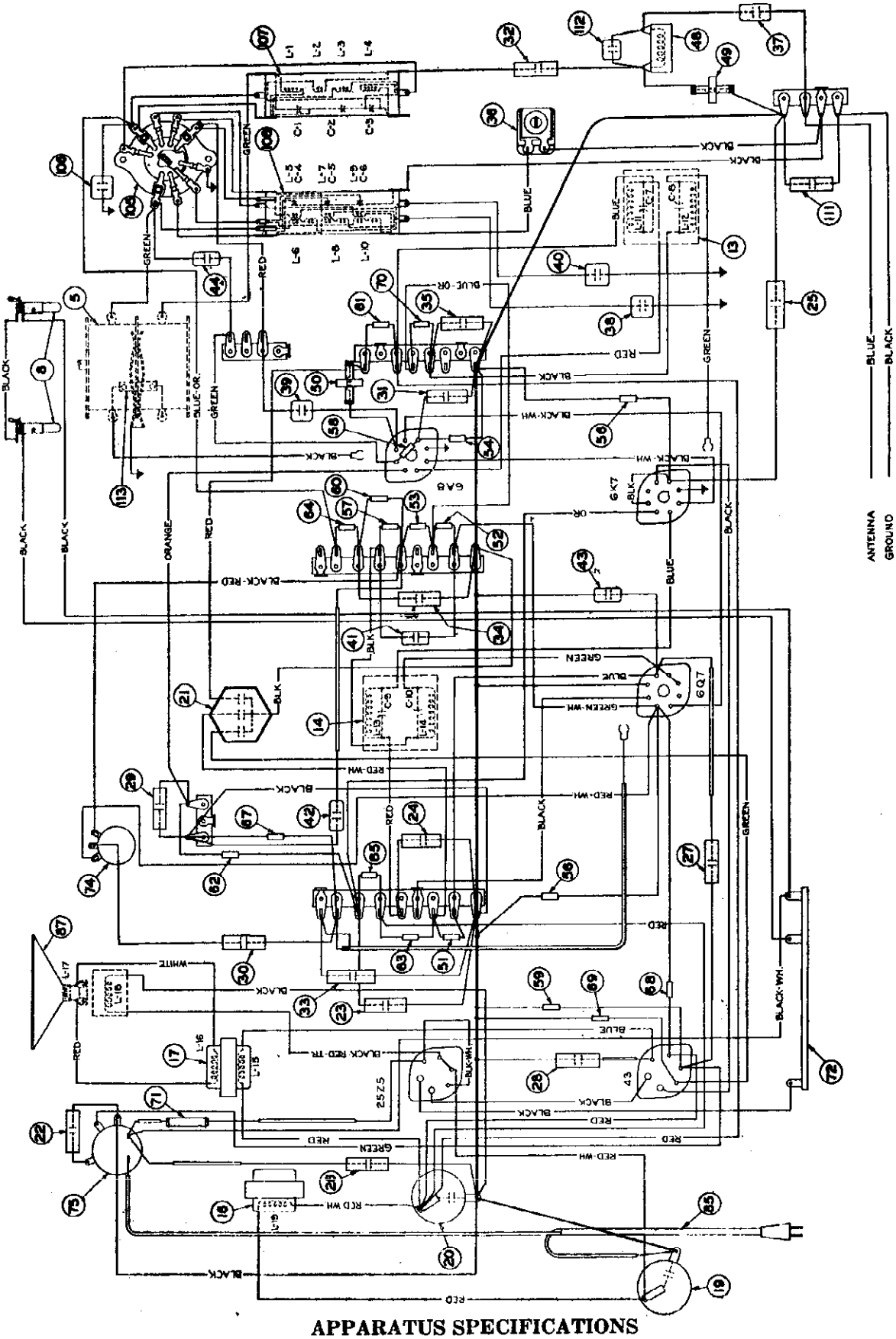

Wiring Diagram of Chassis.

APPARATUS SPECIFICATIONS

No. 125 ..... 50 to 60 Cycles (For AC Operation) ..... P-26052 Chassis Assembly

©John F. Rider, Publisher

MODEL 125 AC-DC
Chassis Views
Alignment, Parts

STROMBERG-CARLSON TEL. MFG. CO.

CIRCUIT DESCRIPTION

This triple range superheterodyne receiver has five tubes and may be operated on a power supply circuit of either alternating or direct current at the voltages and frequency (for A. C. operation) specified above.

The various tubes are used in this receiver as follows: One No. 6A8 tube functions as both Oscillator and Modulator; one No. 6K7 tube is used in the I. F. Amplifier; the No. 6Q7 tube is used as the Demodulator, A. V. C. and Audio Amplifier tube. The No. 43 tube is used in the Audio Power Output stage, and the No. 2525 tube is used as the Rectifier tube for the receiver "B" voltage supply.

ALIGNMENT DATA

All alignment adjustments are accurately made at the factory on these receivers and ordinarily no readjustments are necessary. However, should it become necessary to make any readjustments, this alignment procedure should be carefully followed.

In making any alignment adjustments always adjust the signal generator's output to the minimum value where a good alignment may still be obtained. Never attempt to make any alignment adjustments using a strong signal.

Figure 1 shows the location of all the aligning capacitors used in this receiver.

Intermediate Frequency Adjustments

The intermediate frequency used in these receivers is 465 kilocycles. In making these I. F. circuit adjustments always align in the following order:

1. Secondary of 2nd I. F. Transformer (Capacitor C-10).
2. Primary of 2nd I. F. Transformer (Capacitor C-9).
3. Secondary of 1st I. F. Transformer (Capacitor C-8).
4. Primary of 1st I. F. Transformer (Capacitor C-7).

Radio Frequency Adjustments

The adjustments of the aligning capacitors used in the radio frequency circuits in this receiver should be very carefully made in the following order and at the frequencies specified below:

1. Oscillator's "C" Band Shunt Aligner at 17 Megacycles (Capacitor C-4).
2. Antenna "C" Band Shunt Aligner at 17 Megacycles (Capacitor C-1).
3. Oscillator's "B" Band Shunt Aligner at 3.4 Megacycles (Capacitor C-5).
4. Antenna "B" Band Shunt Aligner at 3.4 Megacycles (Capacitor C-2).
5. Oscillator's "A" Band Shunt Aligner at 1400 Kilocycles (Capacitor C-6).
6. Antenna "A" Band Shunt Aligner at 1400 Kilocycles (Capacitor C-3).
7. Oscillator's "A" Band Series Aligner at 600 Kilocycles (Capacitor (36)
8. Oscillator's "A" Band Shunt Aligner at 1400 Kilocycles (Capacitor C-6).
9. Antenna "A" Band Shunt Aligner at 1400 Kilocycles (Capacitor C-3).

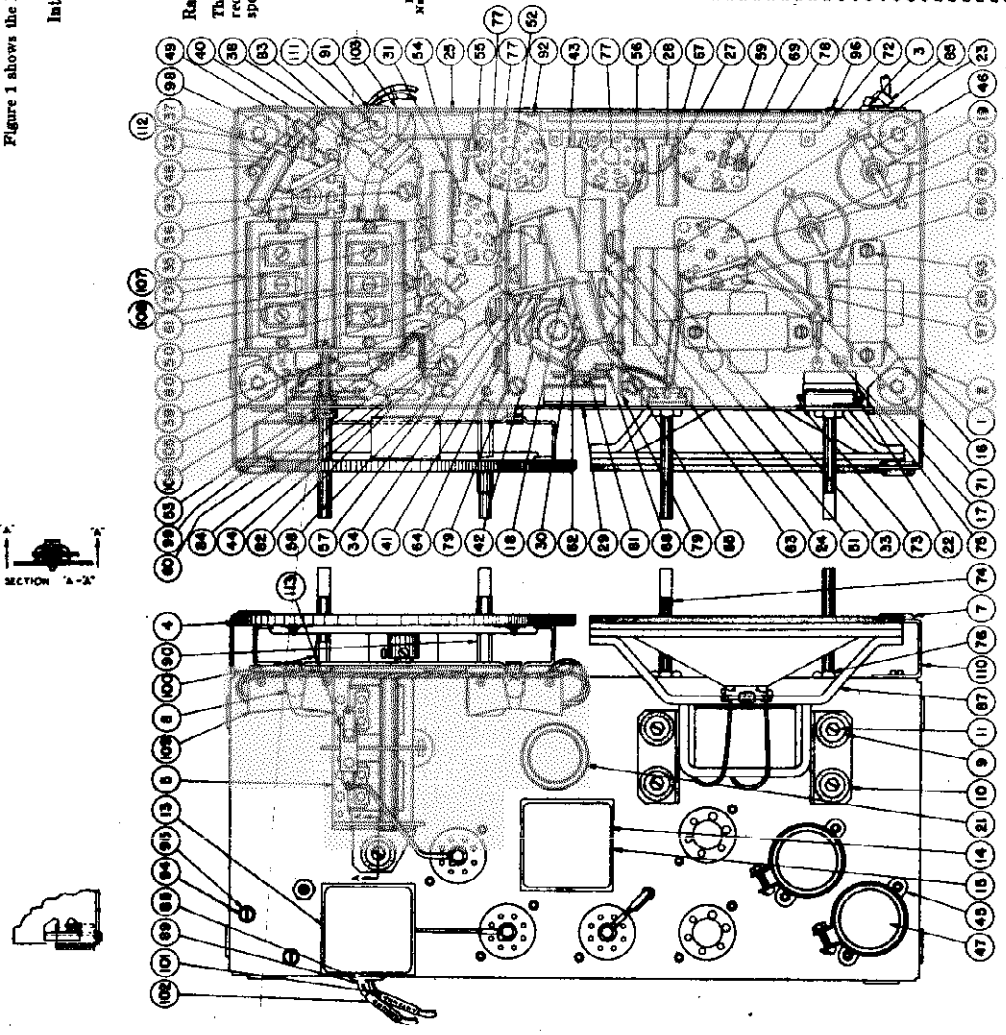

SECTION "A-A"

REPLACEMENT PARTS

Item Number	Piece Number	Part	Item Number	Piece Number	Part
1	22008	Bracket Assembly	56	16027	Resistor Type "F" 350 Ohms
2	24457	Gang Tuning Condenser	57	16533	Resistor Type "H" 47,500 Ohms
3	25145	Dial Assembly	58	16543	Resistor Type "F" 47,000 Ohms
4	26257	Dial Lamp	59	16559	Resistor Type "G" 1 Megohm
5	24781	1st I. F. Transformer	60	16560	Resistor Type "G" 1 Megohm
6	25206	2nd I. F. Transformer	61	16545	Resistor Type "H" 16,000 Ohms
7	25130	Choke Assembly	62	16546	Resistor Type "H" 16,000 Ohms
8	25135	Transformer, Output	63	16542	Resistor Type "H" 10,000 Ohms
9	24102	Capacitor, Electrolytic 88 Mf.	64	16551	Resistor Type "H" 1 Megohm
10	25105	Capacitor, Electrolytic 40 Mf.	65	16552	Resistor Type "H" 2.5 Megohms
11	25104	Capacitor, Electrolytic 4-4-18 Mf.	66	16553	Resistor Type "H" 2.5 Megohms
12	25451	Capacitor .002 Mf.	67	16554	Resistor Type "G" 21,000 Ohms
13	24452	Capacitor .1 Mf.	68	16555	Resistor Type "F" 500 Ohms
14	25482	Capacitor .1 Mf.	69	16556	Resistor Type "H" .47 Megohm
15	25486	Capacitor .1 Mf.	70	16557	Resistor Type "H" 50 Ohms
16	25250	Capacitor .05 Mf.	71	25311	Resistor, "B" Voltage Divider
17	25150	Capacitor .05 Mf.	72	25312	Resistor, "B" Voltage Divider
18	25150	Capacitor .05 Mf.	73	25322	Insulation (For Tube Control)
19	25150	Capacitor .05 Mf.	74	25114	Potentiometer (Volume Control)
20	25150	Capacitor .05 Mf.	75	25061	Off-On Switch (Volume Control)
21	25150	Capacitor .05 Mf.	76	25255	Tube Socket, 6 Prong
22	25150	Capacitor .05 Mf.	77	25256	Tube Socket, 6 Prong
23	25150	Capacitor .05 Mf.	78	25258	Cord, Power Supply
24	24480	Capacitor Assembly .1 Mf.	79	25260	Grid Clip, Assembly
25	24486	Capacitor Assembly .04 Mf.	80	25265	Speaker Assembly
26	24486	Capacitor Assembly .04 Mf.	81	25273	Escutcheon
27	25717	Capacitor, Air Gap	105	25278	Range Switch
28	24778	Capacitor .000 Mf.	106	25488	Capacitor .005 Mf.
29	25497	Capacitor .001 Mf.	107	25118	Coil Assembly, Antenna
30	25497	Capacitor .001 Mf.	108	25117	Coil Assembly, Oscillator
31	25500	Capacitor .00125 Mf.	109	25454	Dial Lamp Socket Assembly
32	25504	Capacitor .100 Mmf.	110	25148	Capacitor Assembly, .01 Mf.
33	25504	Capacitor .100 Mmf.	111	25488	Capacitor .005 Mf.
34	25504	Capacitor .100 Mmf.	112	25113	Capacitor (Gimmick)
35	25500	Capacitor .100 Mmf.			
36	25515	Coil Assembly, Wave Trap			**MISCELLANEOUS PARTS**
37	25514	Coil Assembly, Choke	Item Number		Part
38	25514	Coil Assembly, Choke	39	25096	Cone Assembly (For P-5683 Speaker)
39	25252	Resistor Type "F" .51 Megohm	40	25256	Knob (Used on Volume, "Off-on-Tone" and Station Selector Controls)
41	25250	Resistor Type "F" .51 Megohm			1 Required for Each Receiver
42	25252	Resistor Type "F" .51 Megohm	43	25257	Knob (For Range Switch)
44	25254	Resistor Type "F" 270 Ohms			1 Required
45	25257	Resistor Type "F" 220 Ohms			

©John F. Rider, Publisher

Schematic, Socket, Trimmers
Sensitivity Control

STROMBERG-CARLSON TEL. MFG. CO.

MODEL 130 Series

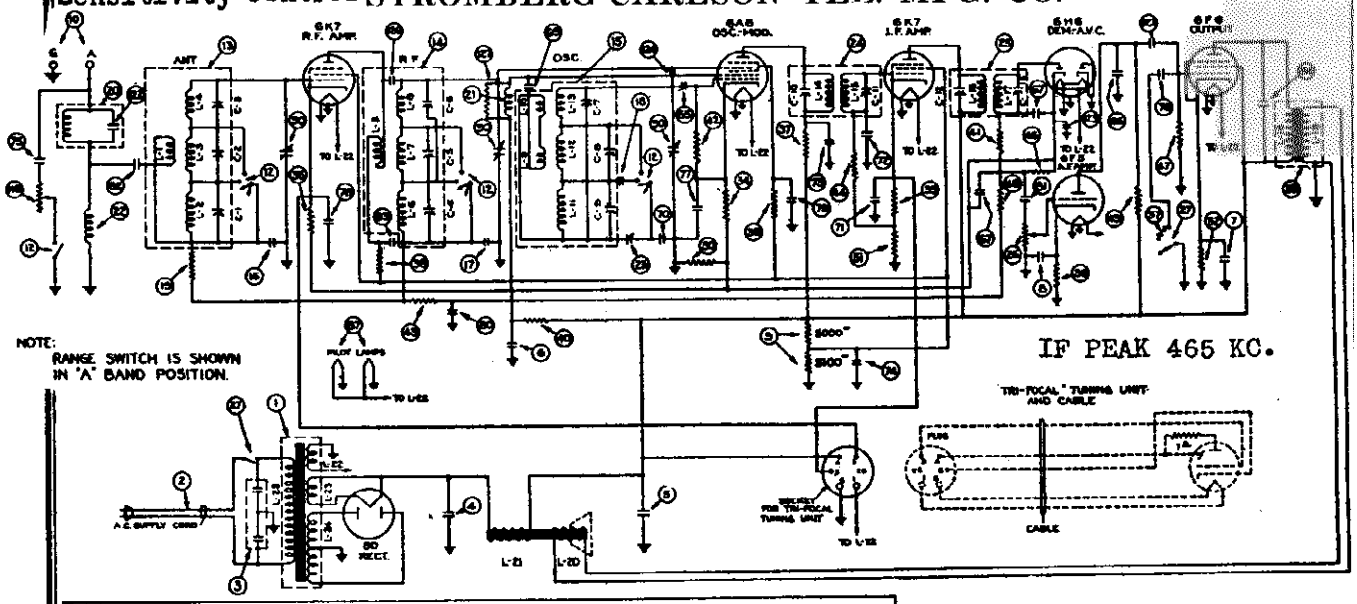

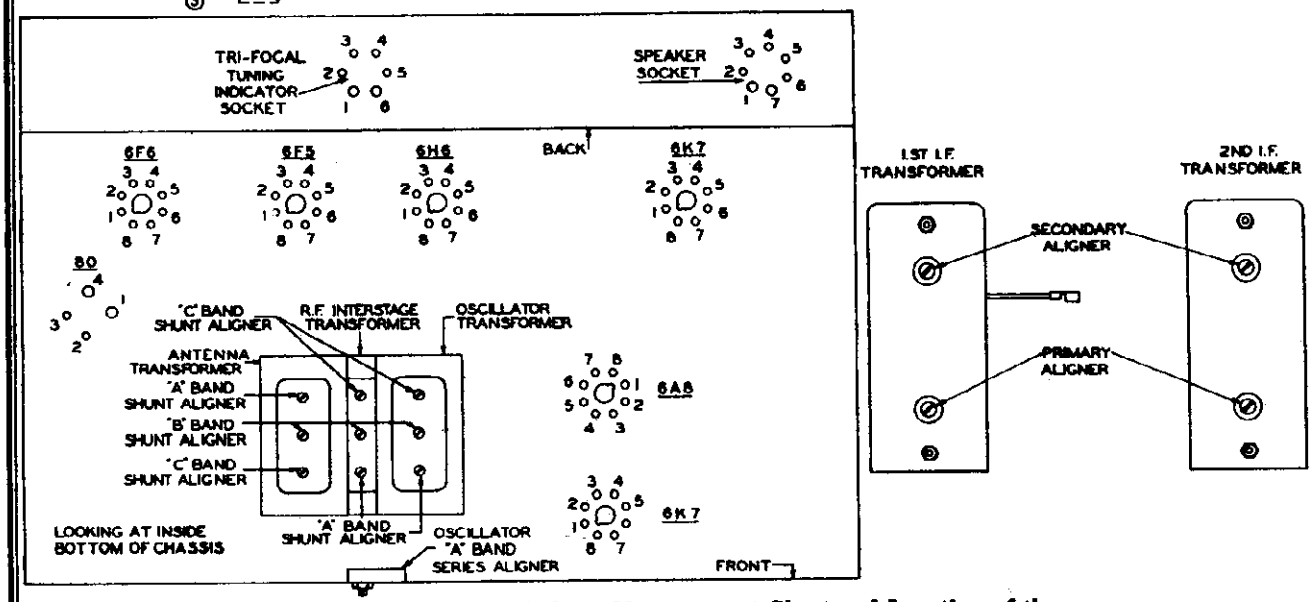

Terminal Layout for Voltage Measurement Chart and Location of the Various Aligning Capacitors.

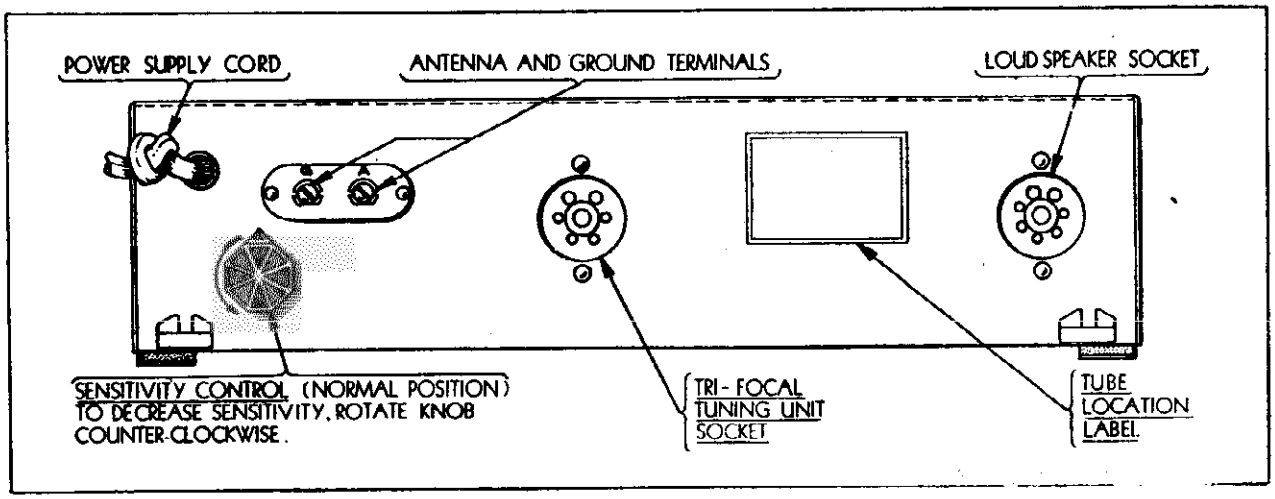

Fig. 1. Location and Operation of Sensitivity Control.

©John F. Rider, Publisher

MODELS 130H,130U,130L
130R,130HB,
130UB,130LB
130RB,130M,130MB
Chassis Wiring

STROMBERG-CARLSON TEL. MFG. CO.

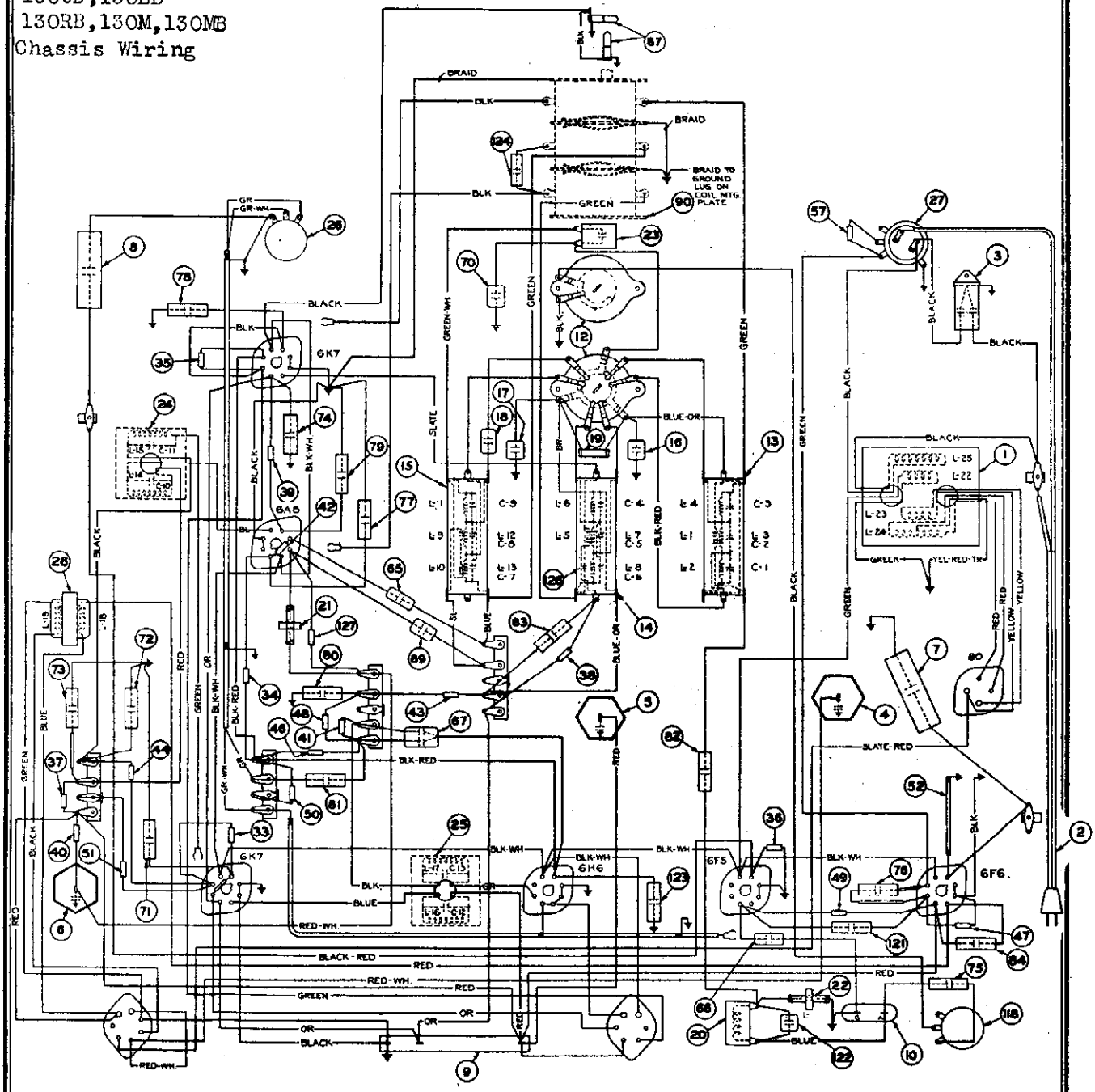

Type of Circuit	Superheterodyne
Tuning Ranges	A—540 to 1500 Kc.; B—1450 to 3500 Kc.; C—5600 to 18,000 Kc.
Number and Types of Tubes:	
Nos. 130-H, 130-U, and 130-L Receivers	2 No. 6K7, 1 No. 6A8, 1 No. 6H6, 1 No. 6F5, 1 No. 6F6, 1 No. 80
Nos. 130-M and 130-R Receivers	2 No. 6K7, 1 No. 6A8, 1 No. 6H6, 1 No. 6F5, 1 No. 6F6, 1 No. 80, 1 No. 6E5
Power Supply Voltage	105 to 125 Volts
Power Supply Frequency	25 to 60 Cycles and 50 to 60 Cycles
Input Power Rating	70 Watts
Frequency of Intermediate Amplifier	465 Kilocycles

APPARATUS SPECIFICATIONS

Nos. 130-H, 130-U, 130-L, 130-R	50 to 60 Cycles	P-26246 Chassis; P-26171 Loud Speaker
Nos. 130-HB, 130-UB, 130-LB, 130-RB	25 to 60 Cycles	P-26247 Chassis; P-26171 Loud Speaker
No. 130-M	50 to 60 Cycles	P-26246 Chassis; P-26170 Loud Speaker
No. 130-MB	25 to 60 Cycles	P-26247 Chassis; P-26170 Loud Speaker

©John F. Rider, Publisher

STROMBERG-CARLSON TEL. MFG. CO.

MODELS 130H,130U
130L,130R,130HB,
130UB,130LB,130RB
130M,130MB
Voltage,Alignment

Tube	Circuit	Cap.	Terminals of Sockets 1	2	3	4	5	6	7	8	Heater Voltages Between Heater Terminals: Socket Terminal Numbers	Volts
6K7	R. F. Amp.	0	0	0	+ 54	+ 96	+7.6	+4.5	*6.3*	+7.6	2-7	*6.3*
6A8	Osc.-Mod.	0	0	0	+222	+ 72	—1.0	+143	*6.3*	+6.1	2-7	*6.3*
6K7	I. F. Amp.	0	0	0	+240	+ 96	+7.4	+4.5	*6.3*	+7.4	2-7	*6.3*
6H6	Dem.—A.V.C.	—	0	0	0	0	0	—	*6.3*	+4.5	2-7	*6.3*
6F5	Audio Amp.	0	0	0	—	+122*	—	—	*6.3*	+.75	2-7	*6.3*
6F6	Audio Output	—	0	0	+226	+237	0	0	*6.3*	+ 15	2-7	*6.3*
80	Rectifier	—	+330	*325*	*325*	+330	—	—	—	—	1-4	*4.8*
Tri-Focal Tuning Indicator Plug's Socket When Tri-Focal Tuning Unit Is Used			*6.3*	0	+7.6	+235	+7.8	0	—	—	1-6	*6.3*
Tri-Focal Tuning Indicator Plug's Socket When Tri-Focal Tuning Unit Is Not Used			*6.3*	0	+7.6	+237	+7.3	0	—	—	1-6	*6.3*
Speaker Socket			+327	0	0	+327	+327	0	+237	—	—	—

Receiver tuned to 1000 Kc., no signal. A. C. voltages are indicated by italics.

ALIGNMENT DATA

All alignment adjustments are accurately made at the factory on these receivers and ordinarily no readjustments are necessary. However, should it become necessary to make any readjustments, this alignment procedure should be carefully followed.

In making any alignment adjustments always adjust the signal generator's output to the minimum value where a good alignment may still be obtained. Never attempt to make any alignment adjustments using a strong signal.

Figure 2 shows the location of all the aligning capacitors used in this receiver.

Intermediate Frequency Amplifier Adjustments

The intermediate frequency used in these receivers is 465 kilocycles. In making these I. F. circuit adjustments always align in the following order:

1. Secondary of 2nd I. F. Transformer (Capacitor C-13).
2. Primary of 2nd I. F. Transformer (Capacitor C-12).
3. Secondary of 1st I. F. Transformer (Capacitor C-11).
4. Primary of 1st I. F. Transformer (Capacitor C-10).

Radio Frequency Adjustments

The adjustments of the aligning capacitors used in the radio frequency circuits in this receiver should be very carefully made in the following order and at the frequencies specified below:

1. Oscillator's "C" Band Shunt Aligner at 17 Megacycles (Capacitor C-7).
2. R. F. Interstage "C" Band Shunt Aligner at 17 Megacycles (Capacitor C-6).
3. Antenna "C" Band Shunt Aligner at 17 Megacycles (Capacitor C-3).
4. Oscillator's "B" Band Shunt Aligner at 3.4 Megacycles (Capacitor C-8).
5. R. F. Interstage "B" Band Shunt Aligner at 3.4 Megacycles (Capacitor C-5).
6. Antenna "B" Band Shunt Aligner at 3.4 Megacycles (Capacitor C-2).
7. Oscillator's "A" Band Shunt Aligner at 1.4 Megacycles (Capacitor C-9).
8. R. F. Interstage "A" Band Shunt Aligner at 1.4 Megacycles (Capacitor C-4).
9. Antenna "A" Band Shunt Aligner at 1.4 Megacycles (Capacitor C-1).
10. Oscillator's "A" Band Series Aligner at 0.6 Megacycles (Capacitor (23)).
11. Oscillator's "A" Band Shunt Aligner at 1.4 Megacycles (Capacitor C-9).
12. R. F. Interstage "A" Band Shunt Aligner at 1.4 Megacycles (Capacitor C-4).
13. Antenna "A" Band Shunt Aligner at 1.4 Megacycles (Capacitor C-1).

©John F. Rider, Publisher

MODELS 130H,130U,
130L,130R,130HB
130UB,130LB,130RB

STROMBERG-CARLSON TEL. MFG. CO.

130M,130MB
Circuit Data
Socket,Trimmers,Parts

CIRCUIT DESCRIPTION

The No. 130 Series of Radio Receivers are divided into two groups; the Nos. 130-U, 130-H, and 130-L are seven tube receivers and are not equipped with the "Tri-Focal Tuning System". The Nos. 130-M and 130-R are eight tube receivers and are equipped with the exclusive Stromberg-Carlson "Tri-Focal Tuning System". A socket is provided on the rear of the chassis for making connections between the tuning indicator and receiver circuits. The chassis used in these different models of No. 130 Receivers are identical.

These No. 130 Receivers are composed of a seven tube chassis employing metal tubes, and have three tuning ranges. In order to obtain maximum performance from these receivers, a sensitivity control is provided for use on the standard broadcast band only. Its control knob is located on the rear of the chassis base. When either the "B" or "C" ranges are in operation, this sensitivity control is automatically cut out of the circuit so that the receiver will function at its maximum sensitivity on these two ranges. In some localities it will be found that without the use of this control, it will be impossible to eliminate adjacent channel interference. When this condition is obtained, the receiver should be tuned accurately to the desired station, and this sensitivity control adjusted so that minimum interference is obtained from the interfering station. See Figure 1.

The various tubes are used in these receivers as follows: One No. 6K7 tube is used in the R. F. Amplifier, and the other No. 6K7 is used in the I. F. Amplifier. The No. 6A8 tube functions as both Oscillator and Modulator tube. The No. 6B8 tube is used as a Demodulator and Automatic Volume Control tube. The No. 6F5 tube is used in the Audio Frequency Amplifier Stage (Driver), and the No. 6F6 tube is used in the Audio Power Output Stage. The No. 80 tube is the Rectifier tube of the power supply unit. In the Nos. 130-M and 130-R Receivers the No. 6E5 tube is used as the indicator of the Tri-Focal Tuning System.

REPLACEMENT PARTS

Item Number	Place Number	Part
1	29849	Power Transformer (50 to 60 Cycles)
1	29849	Power Transformer (25 to 60 Cycles)
2	14498	Cord, A. C. Supply
3	21331	Capacitor Assembly (3-.01 Mf. Capacitors)
4	29496	Capacitor, Electrolytic, 25 Mf.
5	29496	Capacitor, Electrolytic, 10 Mf.
6	29496	Capacitor, Electrolytic, 10 Mf.
7	21297	Capacitor, Electrolytic, 10 Mf., 25 Volts
8	21297	Capacitor, Electrolytic, 10 Mf., 25 Volts
9	29496	Resistor, "B" Voltage Divider
10	29495	Range Switch
11	29510	Coil Assembly, Antenna
12	29511	Coil Assembly, R. F.
13	29512	Coil Assembly, Oscillator
14	29513	Coil Assembly, R. F. Choke
15	29514	Coil Assembly, R. F. Choke
16	29515	Capacitor, .005 Mf.
17	29516	Capacitor, .0001 Mf.
18	29517	Capacitor, .0025 Mf.
19	29518	Resistor, Type "H", 1 Megohm
20	29519	Coil Assembly, Wave Trap
21	29520	Coil Assembly, R. F. Choke
22	29521	Coil Assembly, R. F. Choke
23	29522	Capacitor, Osc. Series Aligner
24	29523	1st I. F. Transformer
25	29524	2nd I. F. Transformer
26	29525	Potentiometer, Volume Control
27	29526	Switch, "Of-On-Tone"
28	29527	Transformer, Audio Output
29	29528	Socket, 4 Prong
30	29529	Socket, 7 Prong
31	29530	Socket, 6 Prong
32	29531	Resistor, Type "F", 150 Ohms
33	29532	Resistor, Type "E", 270 Ohms
34	29533	Resistor, Type "E", 680 Ohms
35	29534	Resistor, Type "E", 2200 Ohms
36	29535	Resistor, Type "E", 4700 Ohms
37	29536	Resistor, Type "E", 10,000 Ohms
38	29537	Resistor, Type "E", 10,000 Ohms
39	29538	Resistor, Type "E", 27,000 Ohms
40	29539	Resistor, Type "E", 47,000 Ohms
41	29540	Resistor, Type "E", 47,000 Ohms
42	29541	Resistor, Type "E", .1 Megohm
43	29542	Resistor, Type "E", .1 Megohm
44	29543	Resistor, Type "E", .47 Megohm
45	29544	Resistor, Type "E", .47 Megohm
46	29545	Resistor, Type "E", .51 Megohm
47	29546	Resistor, Type "E", 1 Megohm
48	29547	Resistor, Type "E", .27 Megohm
49	29548	Resistor, Type "E", 390 Ohms
50	29549	Resistor, Type "E", 500 Ohms
51	29550	Resistor, 400 Ohms, 1 Watt
52	29551	Resistor, Type "E", 47,000 Ohms
53	29552	Bracket Assembly
54	21504	Capacitor, 100 Mmf.
55	21504	Capacitor, 100 Mmf.
56	29512	Capacitor Assembly, 5—100 Mmf.
57	29477	Capacitor, .001 Mf.

Item Number	Place Number	Part
58	29529	Capacitor, .0025 Mf.
59	29496	Capacitor Assembly, .1 Mf.
60	29496	Capacitor Assembly, .1 Mf.
61	29496	Capacitor Assembly, .1 Mf., 400 Volts
62	29496	Capacitor Assembly, .1 Mf., 400 Volts
63	29496	Capacitor Assembly, .01 Mf.
64	29496	Capacitor Assembly, .01 Mf.
65	29496	Capacitor Assembly, .05 Mf.
66	29496	Capacitor Assembly, .05 Mf.
67	29496	Capacitor Assembly, .02 Mf.
68	29496	Capacitor Assembly, .02 Mf.
69	29496	Capacitor Assembly, .02 Mf.
70	29496	Capacitor Assembly, .02 Mf.
71	29496	Capacitor Assembly, .05 Mf.
72	29496	Capacitor Assembly, .005 Mf.
73	29496	Capacitor Assembly, .005 Mf.
74	29496	Capacitor, Trimmer
75	29496	Capacitor, Trimmer
76	29496	Capacitor Assembly, .1 Mf.
77	29496	Capacitor Assembly, .005 Mf.
78	29496	Capacitor, .0025 Mf.
79	29496	Capacitor Assembly, .1 Mf.
80	29496	Capacitor Assembly, .1 Mf.
81	29496	Capacitor Assembly, .02 Mf.
82	29496	Capacitor Assembly, .02 Mf.
83	29496	Capacitor Assembly, .02 Mf.
84	29496	Capacitor Assembly, .005 Mf.
85	29496	Capacitor, Trimmer
86	29496	Capacitor Assembly, .005 Mf.
87	29496	Pilot Lamp
88	29496	Pilot Assembly
89	29496	Gang Tuning Capacitor
90	29496	Capacitor Assembly, .01 Mf.
91	29496	Capacitor, .005 Mf.
92	29496	Capacitor Assembly, .1 Mf.
93	29496	Capacitor, Trimmer
94	29496	Resistor, Type "H", 25,000 Ohms

MISCELLANEOUS PARTS

Place Number	Part
29529	Cone Assembly (For F-86170 Speaker)
29529	Cone Assembly (For F-86171 Speaker)
29503	Plug (For Loud Speaker Cable)
29501	Plug (For Tri-Focal Tuning Unit Cable)
29500	Resistor, Type "E", 1 Megohm (Used at Socket of No. 6E5 Tube)
29517	Pilot Lamp Socket
29502	Knob (For Volume Control. Used on the Nos. 130-M, 130-U, 130-L, 130-R Receivers)
29502	Knob (For Volume Control. Used only on the No. 130-R Receiver)
29505	Knob (For Range Switch. Used on Nos. 130-M, 130-U, 130-L, 130-R Receivers)
29504	Knob (For Range Switch. Used only on the No. 130-R Receiver)
29506	Knob (For Off-On-Tone Control. Used on Nos. 130-M, 130-U, 130-L, 130-R Receivers)
29508	Knob (For Off-On-Tone Control. Used only on the No. 130-R Receiver)
29505	Knob (For Large Portion of Tuning Shaft. Used on the Nos. 130-M, 130-U, 130-L, 130-R Receivers)
29507	Knob (For Large Portion of Tuning Shaft. Used only on the No. 130-R Receivers)
29504	Knob (For Vernier Portion of Tuning Shaft. Used on the Nos. 130-M, 130-U, 130-L, 130-R Receivers
29508	Knob (For Vernier Portion of Tuning Shaft. Used only on the No. 130-R Receivers)

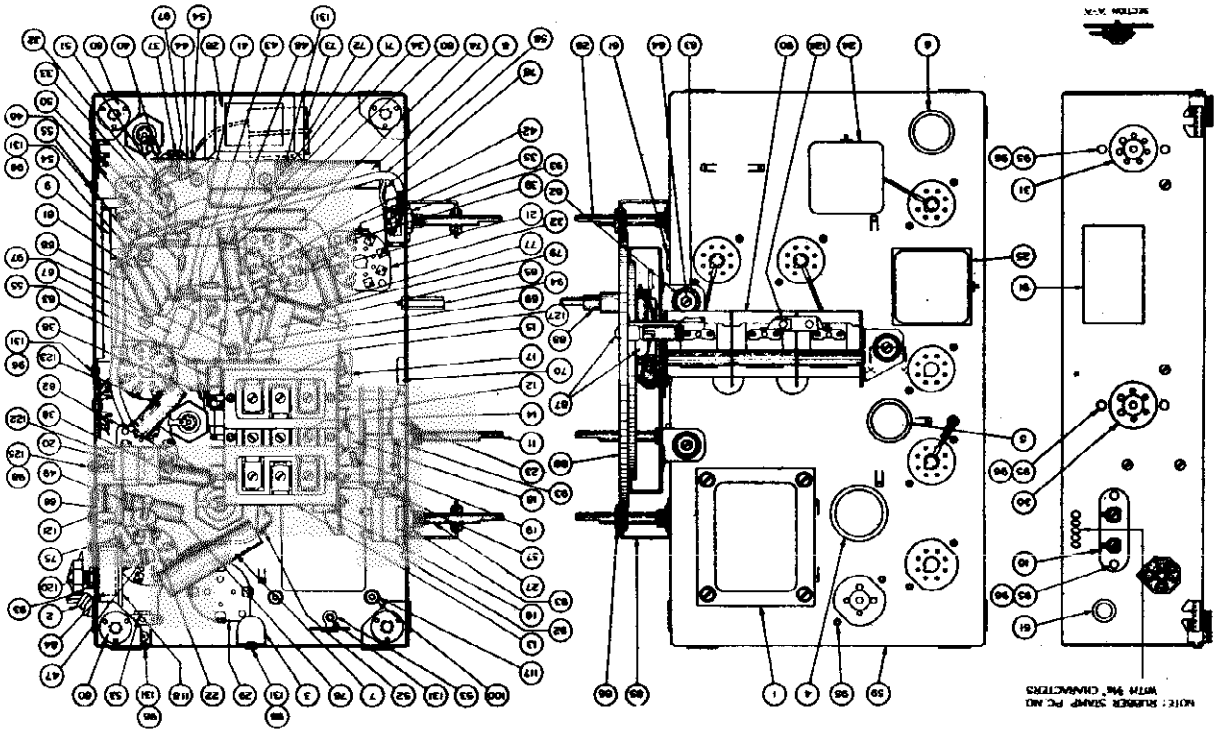

©John F. Rider, Publisher

MODELS 145L,145B
145P,145PB STROMBERG-CARLSON TEL. MFG. CO.
Chassis Wiring

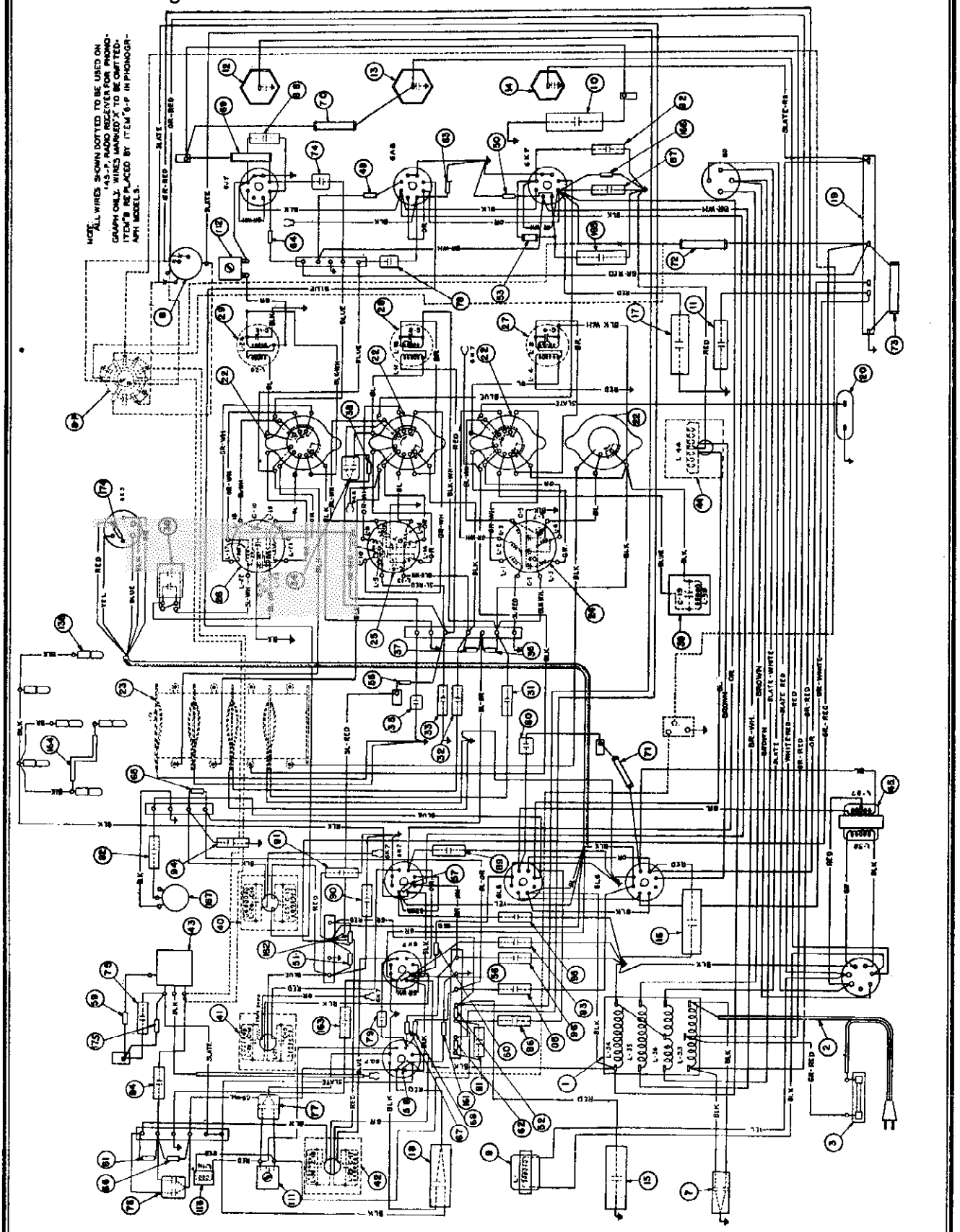

©John F. Rider, Publisher

©John F. Rider, Publisher

CIRCUIT DESCRIPTION

The No. 145 Radio Receiver is a ten tube, "Adjustable High Fidelity" receiver employing metal tubes including the new "Beam" power tubes. This receiver uses a Carpinchoe high fidelity dynamic speaker, and has incorporated in it the exclusive "Patent Applied For", Stromberg-Carlson "Tri-Focal" tuning system and the exclusive Stromberg-Carlson Acoustical Laboratories' revolutionary new development, the "Acoustical Labyrinth". This new device extends the bass response, provides reproduction only from the front of the cabinet, and eliminates all cabinet resonance. Audio reproduction is further improved in this receiver by employing sound diffusing vanes in front of the loud speaker opening which distribute the higher pitched tones, thereby providing excellent reproduction in all parts of the room by spreading out these directional frequencies.

Maximum selectivity between adjacent stations located in the standard broadcast band is obtained by the use of an additional tuned radio frequency ("Bi-resonator") circuit. When either the "X", "B", or "C" ranges are in operation, this additional tuned radio frequency circuit is automatically cut out of the receiver circuit. Adjustable high fidelity is obtained from this receiver by means of the variable band width, intermediate frequency transformers which are used in the two intermediate amplifier stages.

The various tubes are used in this receiver as follows: One No. 6K7 tube is used in the R. F. Amplifier, and the other two No. 6K7 tubes are used in the First and and Second I. F. Amplifier Stages. The No. 6A8 tube is used as the Modulator tube, and the No. 6J7 tube is used as the Oscillator tube. The No. 6Q7 tube is used as the Demodulator, Automatic Volume Control, and Audio Amplifier tube. The two No. 6L6 tubes are used in the Audio Power Output Stage. The No. 6E5 tube is used as the Indicator of the "Tri-Focal Tuning System", and the No. 5Z3 tube is the Rectifier tube of the Power Supply Unit.

			Terminals of Sockets								*Heater Voltages Between Heater Terminals*	
Tube	*Circuit*	*Cap*	1	2	3	4	5	6	7	8	*Socket Terminal Numbers*	*Volts*
6K7	R. F. Amp.	0	0	0	+245	+102	+6.8	+3.5	*6.3*	+6.8	2-7	*6.3*
6A8	Mod.	0	0	0	+247	+102	— 25	+102	*6.3*	+5.2	2-7	*6.3*
6J7	Osc.	— 25	0	0	+180	+145	0	—	*6.3*	0	2-7	*6.3*
6K7	I. F. Amp.	0	0	0	+240	+ 96	+7.6	+3.2	*6.3*	+7.6	2-7	*6.3*
6K7	I. F. Amp.	+.25	0	0	+242	+ 96	+6.9	+3.8	*6.3*	+6.9	2-7	*6.3*
6Q7	Dem.	0	0	0	+150*	0	+.15	+4.2	*6.3*	+7.5	2-7	*6.3*
6L6	Output	—	0	0	+260	+190	0	—	*6.3*	+ 12	2-7	*6.3*
6E5	Tuning Ind.	—	*6.3*	+.5	+7.5	+238	+ 9	0	—	—	1-6	*6.3*
5Z3	Rectifier	—	+442	*400*	*400*	—442	—	—	—	—	1-4	*4.8*
Speaker		—	+425	0	0	—442	+442	—	+262	—		

Voltage across vernier dial pilot lamp—*5.3* volts

Receiver tuned to 1000 Kc., no signal. A. C. voltages are indicated by italics.

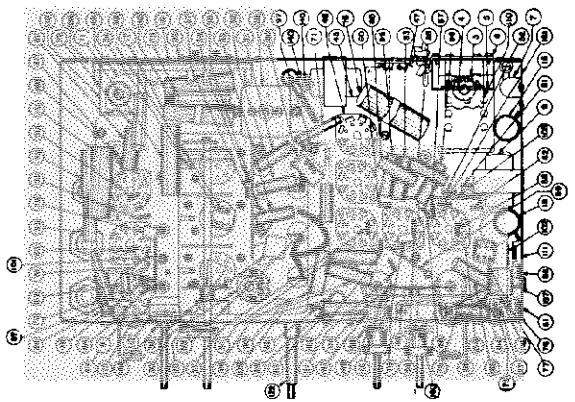

ALIGNMENT DATA

All alignment adjustments are accurately made at the factory on this receiver, and ordinarily no readjustments are necessary. However, should it become necessary to make any readjustments, this alignment procedure should be carefully followed.

In making any alignment adjustments always adjust the signal generator's output to the minimum value where a good alignment may still be obtained. Never attempt to make any alignment adjustments using a strong signal.

Figure 1 shows the location of all the aligning capacitors used in this receiver.

Intermediate Frequency Amplifier Adjustments

Because of the necessity of obtaining the proper shape of resonance curve of these stages in a high fidelity receiver, it is recommended that unless it is absolutely essential, these I. F. adjustments be untouched. In the factory these adjustments are made using a visual system which allows the operator to see the exact shape of the resonance curve. For this reason it is best to have these adjustments made at the factory. However, in the case where this cannot be done, the following procedure should be followed.

Operate the range switch of the receiver to the "A" range position. Set the tuning dial at its extreme low frequency position, and operate the "Tone-Fidelity" control knob so that the receiver is adjusted for the standard fidelity position as indicated by the fidelity indicator located on the front panel of the receiver. **Never attempt to align the I. F. circuits of this receiver with the "Tone-Fidelity" control set at any position other than the standard fidelity.** The I. F. circuits may then be checked for alignment by adjusting the aligning capacitors in the exact order as follows:

1. Secondary of 3rd I. F. Transformer (Capacitor C-18).
2. Primary of 3rd I. F. Transformer (Capacitor C-17).
3. Secondary of 2nd I. F. Transformer (Capacitor C-16).
4. Primary of 2nd I. F. Transformer (Capacitor C-15).
5. Secondary of 1st I. F. Transformer (Capacitor C-14).
6. Primary of 1st I. F. Transformer (Capacitor C-13).

Radio Frequency Adjustments

The alignment of the radio frequency circuits for the various ranges in this receiver should be very carefully made in the order and at the frequencies specified.

It will be noted that no instructions are given for aligning the receiver at other than two frequencies for any range. Each receiver is given an extra ing check for "tracking" at various frequencies in each range before leaving the factory. It is felt by the manufacturers that should any receiver through accident require a check on the "tracking", it should be returned to the factory, where this may be easily and accurately done.

Alignment of Long-Wave-Weather Range (Also Referred to as "X" Band) Circuits

1. Oscillator's "X" Band Shunt Aligning Capacitor at [illegible] Kilocycles (Capacitor C-12).
2. R. F. Interstage "X" Band Shunt Aligning Capacitor at [illegible] Kilocycles (Capacitor C-8).
3. Antenna "X" Band Shunt Aligning Capacitor at 350 Kilocycles (Capacitor C-4).
4. Oscillator "X" Band Series Aligning Capacitor at 1[illegible] Kilocycles (Capacitor Item 112). When operation No. 4 has been completed repeat operations 1, 2, and 3 again and in the exact order given.

Alignment of Standard Broadcast Range (Also Referred to as "A" Band) Circuits

1. Oscillator's "A" Band Shunt Aligning Capacitor at 1500 Kilocycles (Capacitor C-11).
2. R. F. Interstage "A" Band Shunt Aligning Capacitor at 1500 Kilocycles (Capacitor C-7).
3. "A" Band, R. F. Bi-resonator Shunt Aligning Capacitor at 1500 Kilocycles (Capacitor C-19).
4. Antenna "A" Band Shunt Aligning Capacitor at 1500 Kilocycles (Capacitor C-3).
5. Oscillator "A" Band Series Aligning Capacitor at 600 Kilocycles (Capacitor C-20). When operation No. 4 has been completed repeat operations 1, 2, and 3 again and in the exact order given.

Alignment of Amateur, Police, and Aircraft Range (Also Referred to as "B" Band) Circuits

1. Oscillator's "B" Band Shunt Aligning Capacitor at 5 Megacycles (Capacitor C-10).
2. R. F. Interstage "B" Band Shunt Aligning Capacitor at 5 Megacycles (Capacitor C-6).
3. Antenna "B" Band Shunt Aligning Capacitor at 5 Megacycles (Capacitor C-2).
4. Oscillator "B" Band Series Aligning Capacitor at 1.8 Megacycles (Capacitor C-21). When operation No. 4 has been completed repeat operations 1, 2, and 3 again and in the exact order given.

Alignment of Short-Wave-Foreign Range (Also Referred to as "C" Band) Circuits

1. Oscillator's "C" Band Shunt Aligning Capacitor at 16 Megacycles (Capacitor C-9).
2. R. F. Interstage "C" Band Shunt Aligning Capacitor at 16 Megacycles (Capacitor C-5).
3. Antenna "C" Band Shunt Aligning Capacitor at 16 Megacycles (Capacitor C-1).

MODELS 145L,145LB
145P,145PB STROMBERG-CARLSON TEL. MFG. CO.
Parts List

REPLACEMENT PARTS

Item Number	Piece Number	Part
1	26440	Power Transformer (50 to 60 Cycles Chassis)
1	26441	Power Transformer (25 to 60 Cycles Chassis)
2	24268	Cord (A. C. Power Supply)
3	23150	Fuse (2 Amperes)
4	21984	Fuse Block Assembly
7	21535	Capacitor Assembly (2—.01 Mf. Capacitors)
8	26061	Switch ("Off-On" and Tone Control)
9	26260	Choke Coil Assembly (Filter of Rectifier)
10	25788	Electrolytic Capacitor, 1 Mf., 450 Volts
11	24207	Electrolytic Capacitor, 12 Mf., 25 Volts
12	22757	Electrolytic Capacitor (50 to 60 Cycles Chassis)
12	26510	Electrolytic Capacitor (25 to 60 Cycles Chassis)
13	22789	Electrolytic Capacitor (50 to 60 Cycles Chassis)
13	26511	Electrolytic Capacitor (25 to 60 Cycles Chassis)
14	25458	Electrolytic Capacitor, 16 Mf.
15	26693	Electrolytic Capacitor, 4 Mf., 350 Volts
16	26693	Electrolytic Capacitor, 4 Mf., 350 Volts
17	26693	Electrolytic Capacitor, 4 Mf., 350 Volts
18	26048	Capacitor, Dual, 10 Mf.
19	26442	Resistor "B" Voltage Divider
22	26443	Range Switch Assembly
23	26444	Gang Tuning Capacitor Assembly
24	26446	Coil Assembly, Antenna ("A", "B" and "C" Ranges)
25	26447	Coil Assembly, R. F. ("A", "B" and "C" Ranges)
26	26448	Coil Assembly, Oscillator ("A", "B" and "C" Ranges)
27	26507	Coil Assembly, Antenna ("X" Range)
28	26506	Coil Assembly, R. F. ("X" Range)
29	26509	Coil Assembly, Oscillator ("X" Range)
30	26564	Capacitor Assembly, Series Aligner ("A" and "B" Ranges)
21	24405	Capacitor Assembly, .04 Mf.
22	24405	Capacitor Assembly, .04 Mf.
23	24994	Capacitor Assembly, .05 Mf.
24	26513	Capacitor, Double, 200 Mmf.
25	25155	Capacitor, .0035 Mf.
36	26357	Resistor, Type "E", .1 Megohm
37	26357	Resistor, Type "E", .1 Megohm
38	26353	Resistor, Type "E", 47,000 Ohms
39	26474	Coil Assembly (Bi-Resonator)
40	26481	1st I. F. Transformer
41	26482	2nd I. F. Transformer
42	26243	3rd I. F. Transformer
43	26077	Potentiometer (Volume Control)
44	26272	Transformer Assembly, Audio Input
45	26469	Transformer Assembly, Audio Output
46	22988	Socket, 4 Prong
47	23517	Socket, 7 Prong
48	25539	Socket, 8 Prong
49	26326	Resistor, Type "E", 270 Ohms
50	26324	Resistor, Type "E", 180 Ohms
51	26330	Resistor, Type "E", 560 Ohms
52	26357	Resistor, Type "E", .1 Megohm
53	26329	Resistor, Type "E", 470 Ohms
55	26330	Resistor, Type "E", 560 Ohms
56	26330	Resistor, Type "E", 560 Ohms
57	26333	Resistor, Type "E", 1000 Ohms
58	26340	Resistor, Type "E", 3900 Ohms
59	26341	Resistor, Type "E", 4700 Ohms
60	26331	Resistor, Type "E", 680 Ohms
61	26345	Resistor, Type "E", 10,000 Ohms
62	26349	Resistor, Type "E", 22,000 Ohms
63	26353	Resistor, Type "E", 47,000 Ohms
64	26353	Resistor, Type "E", 47,000 Ohms
65	26357	Resistor, Type "E", .1 Megohm
66	26362	Resistor, Type "E", .27 Megohm
67	26369	Resistor, Type "E", 1 Megohm
68	26369	Resistor, Type "E", 1 Megohm
69	18696	Resistor, Type "B", 10,000 Ohms
70	24073	Resistor, Type "B", 25,000 Ohms
71	18696	Resistor, Type "B", 10,000 Ohms
72	25526	Resistor, Type "F", 15,000 Ohms
73	26567	Resistor, Type "F", 30,000 Ohms
74	25487	Capacitor, Type "W", .001 Mf.
75	24994	Capacitor Assembly, .05 Mf.
76	26512	Capacitor, Double, 100 Mmf.
77	26512	Capacitor, Double, 100 Mmf.
78	24560	Capacitor, 50 Mmf.
79	24560	Capacitor, 50 Mmf.
80	25487	Capacitor, Type "W", .001 Mf.
81	25149	Capacitor Assembly, .01 Mf.
82	25149	Capacitor Assembly, .01 Mf.
83	24405	Capacitor Assembly, .04 Mf.
84	24405	Capacitor Assembly, .04 Mf.
85	24405	Capacitor Assembly, .04 Mf.
86	24405	Capacitor Assembly, .04 Mf.
87	24994	Capacitor Assembly, .05 Mf.
88	24994	Capacitor Assembly, .05 Mf.
89	24994	Capacitor Assembly, .05 Mf.
90	24994	Capacitor Assembly, .05 Mf.
91	24994	Capacitor Assembly, .05 Mf.
92	24402	Capacitor Assembly, .1 Mf.
93	24402	Capacitor Assembly, .1 Mf.
94	24402	Capacitor Assembly, .1 Mf.
95	24402	Capacitor Assembly, .1 Mf.
96	24402	Capacitor Assembly, .1 Mf.
111	26568	Adjustable Capacitor (High Frequency Cut-off Filter)
112	26569	Capacitor (Oscillator Series Aligner, "X" Range)
113	26485	Potentiometer and Bracket Assembly (Tone Control and High Fidelity)
116	26515	Coil Assembly (High Frequency Cut-off Filter)
122	26220	Drive Shaft Assembly
123	26520	Dial Assembly
124	26533	Dial Assembly (Main)
125	26672	Drive Cord Assembly, R. T. Disc
126	26673	Drive Cord Assembly, L. T. Disc
127	26683	Cord Assembly (Dial Elevator)
128	26226	Spring
132	26682	Reel Assembly (Range Switch)
133	26667	Reel Assembly (Tone Control)
134	26666	Reel Assembly (Volume Control)
136	26147	Dial Lamp Socket
137	26257	Lamp Shades (For Dial Lamps)
138	26257	Pilot Lamp
141	26497	Cable Assembly, Tri-Focal Indicator
161	26353	Resistor, Type "E", 47,000 Ohms
162	26353	Resistor, Type "E", 47,000 Ohms
163	24402	Capacitor Assembly, .1 Mf.
164	26780	Resistor, 3.5 Ohms, (Pilot Lamp)
165	24207	Electrolytic Capacitor, 12 Mf., 25 Volts
166	26353	Resistor, Type "E", 47,000 Ohms
167	26439	Potentiometer (Tone Control)
174	26369	Resistor, Type "E", .1 Megohm

MISCELLANEOUS PARTS

Piece Number	Part
26250	Cone Assembly (For P-26170 Speaker)
26045	Plug (For Loud Speaker Cable)
26369	Resistor, Type "E", 1 Megohm (Used at Socket of No. 6E5 Tube)
26302	Knob (For "Volume" Control)
26299	Knob (For "Tone-Fidelity" Control)
26305	Knob (For "Stations" Selector Control Shaft)
26306	Knob (For "Vernier" Stations Selector Control Shaft)
26301	Knob (For "Ranges" Switch)
26300	Knob (For "Off-On-Bass" Control)
26291	Knob (For "Off-On-Bass-Phono" Control. Used only on No. 145-P Receivers)

©John F. Rider, Publisher

MODEL 89-C Tube Tester

SUPREME INSTRUMENTS CORP Schematic

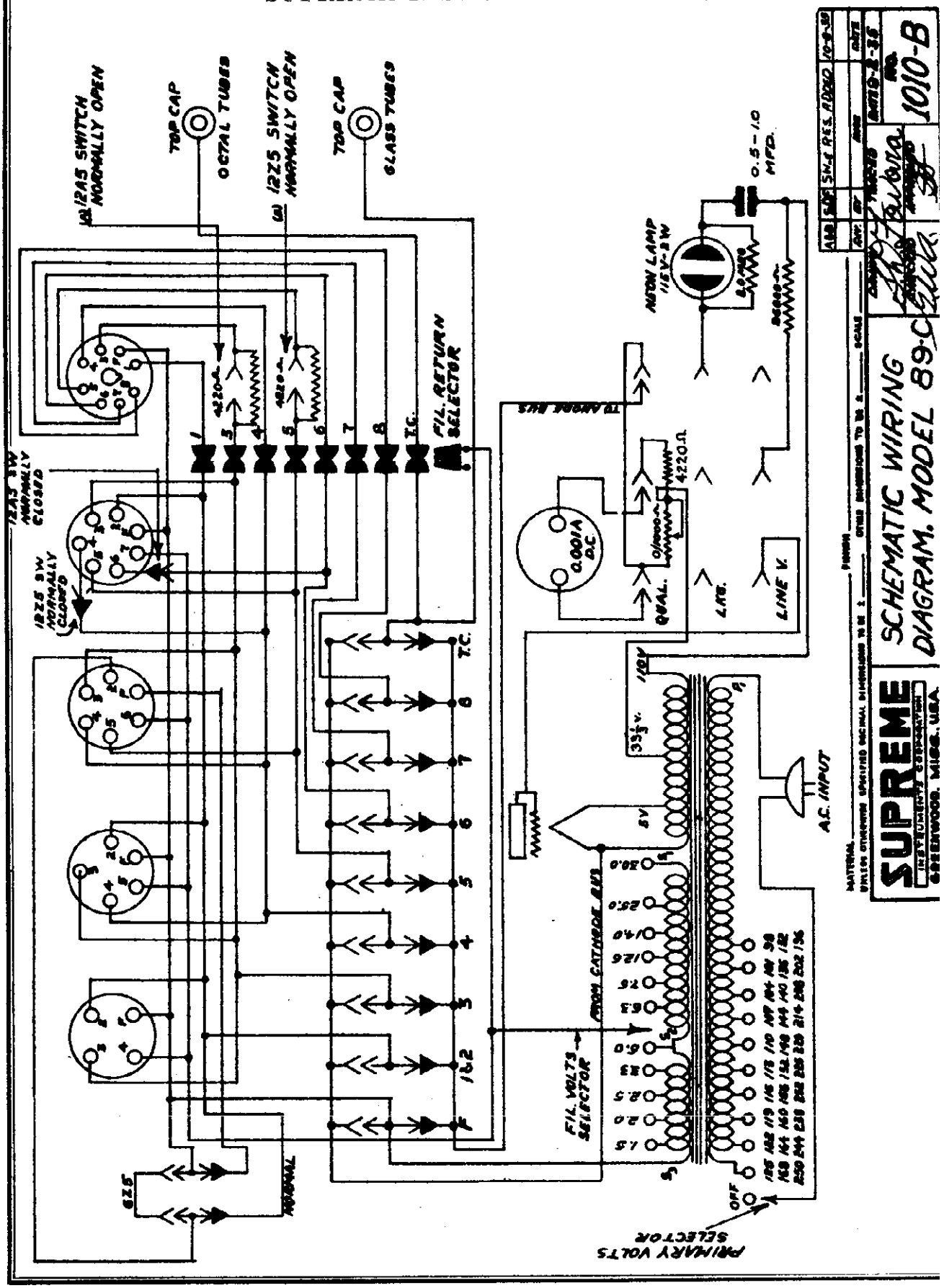

©John F. Rider, Publisher

MODEL 89-D Tube Tester
Schematic

SUPREME INSTRUMENTS CORP.

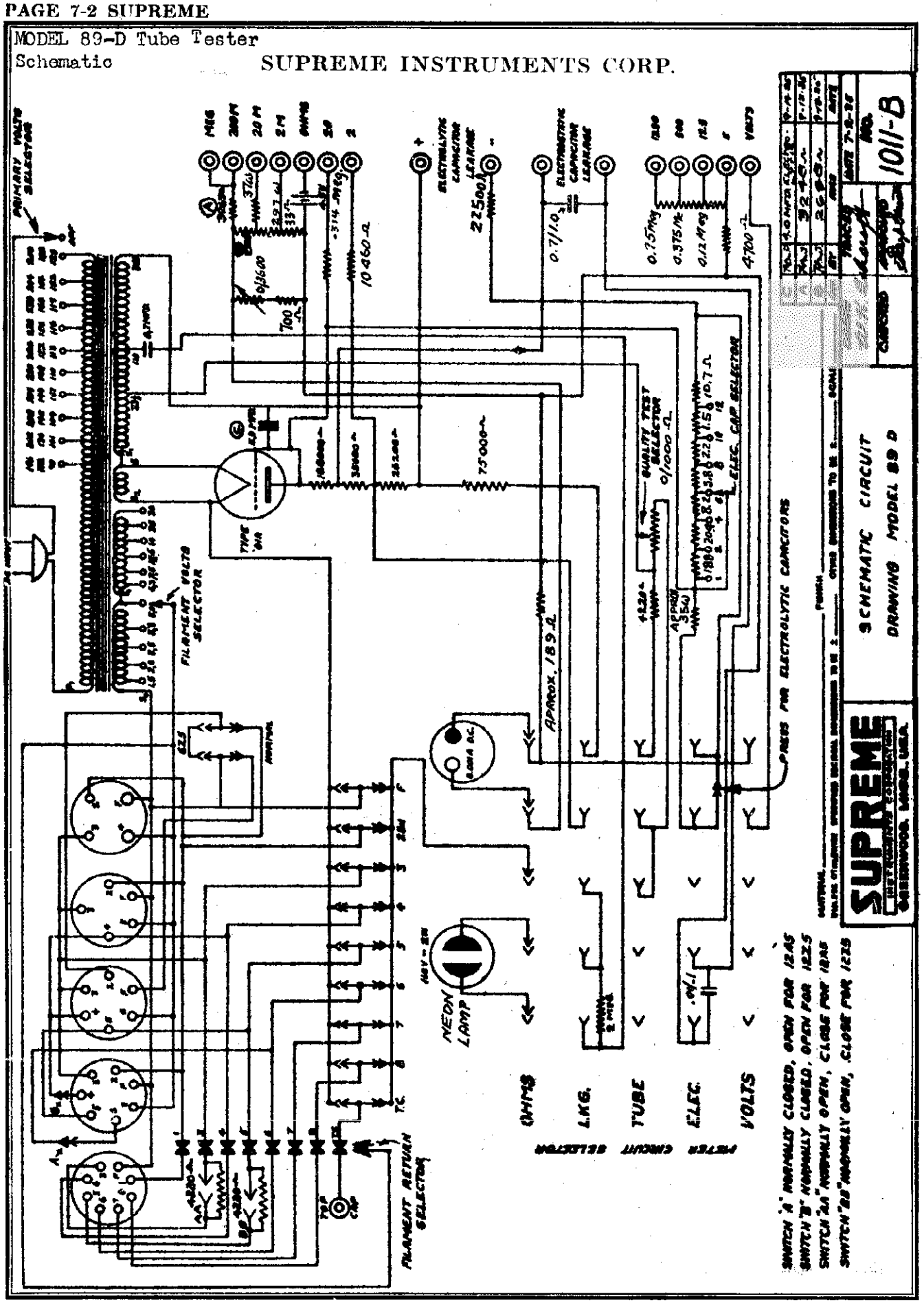

©John F. Rider, Publisher

MODEL 189
Signal Ge
Schematic

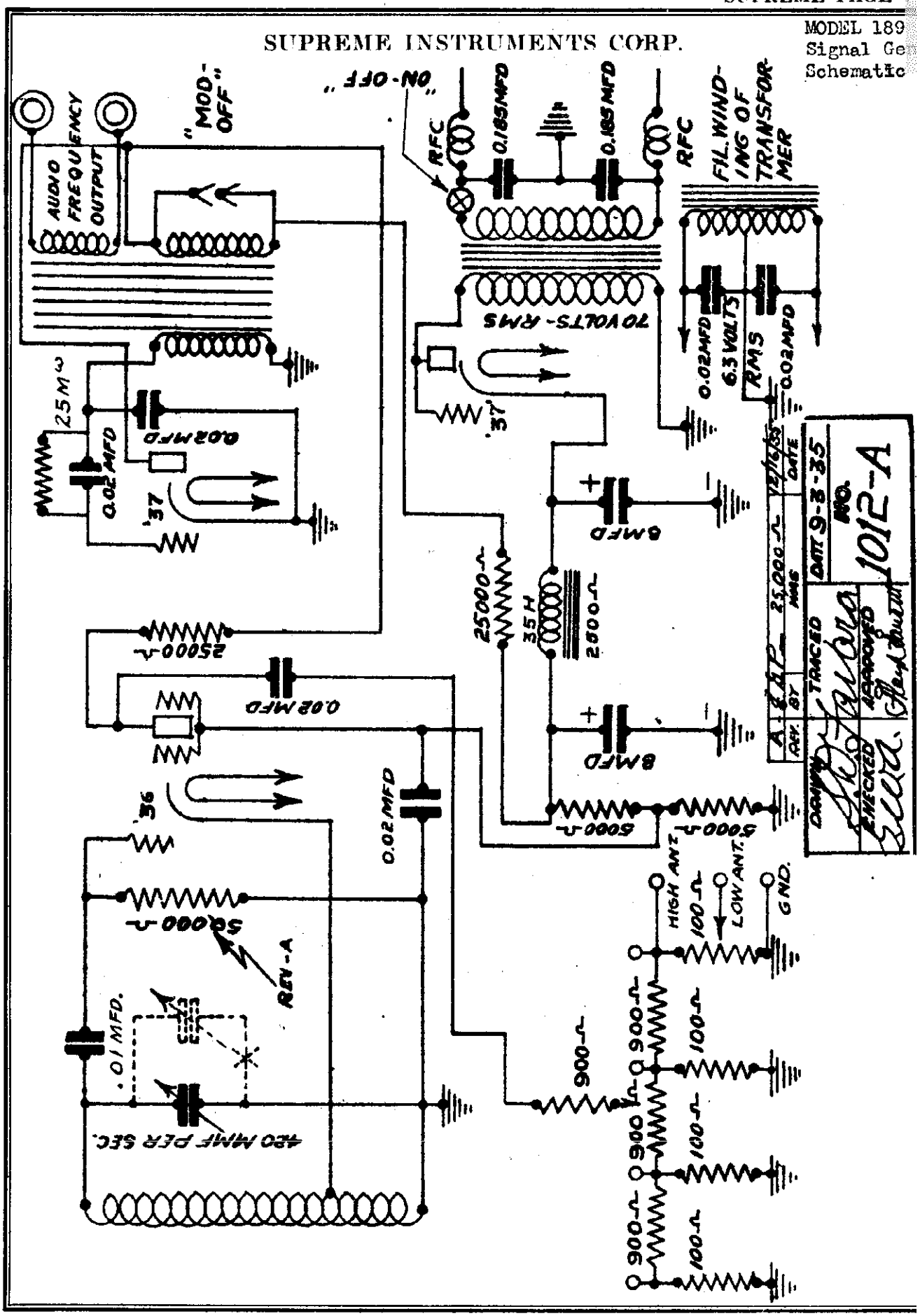

©John F. Rider, Publisher

MODEL 339-D

SUPREME INSTRUMENTS CORP.

DeLuxe Analyzer
Schematic

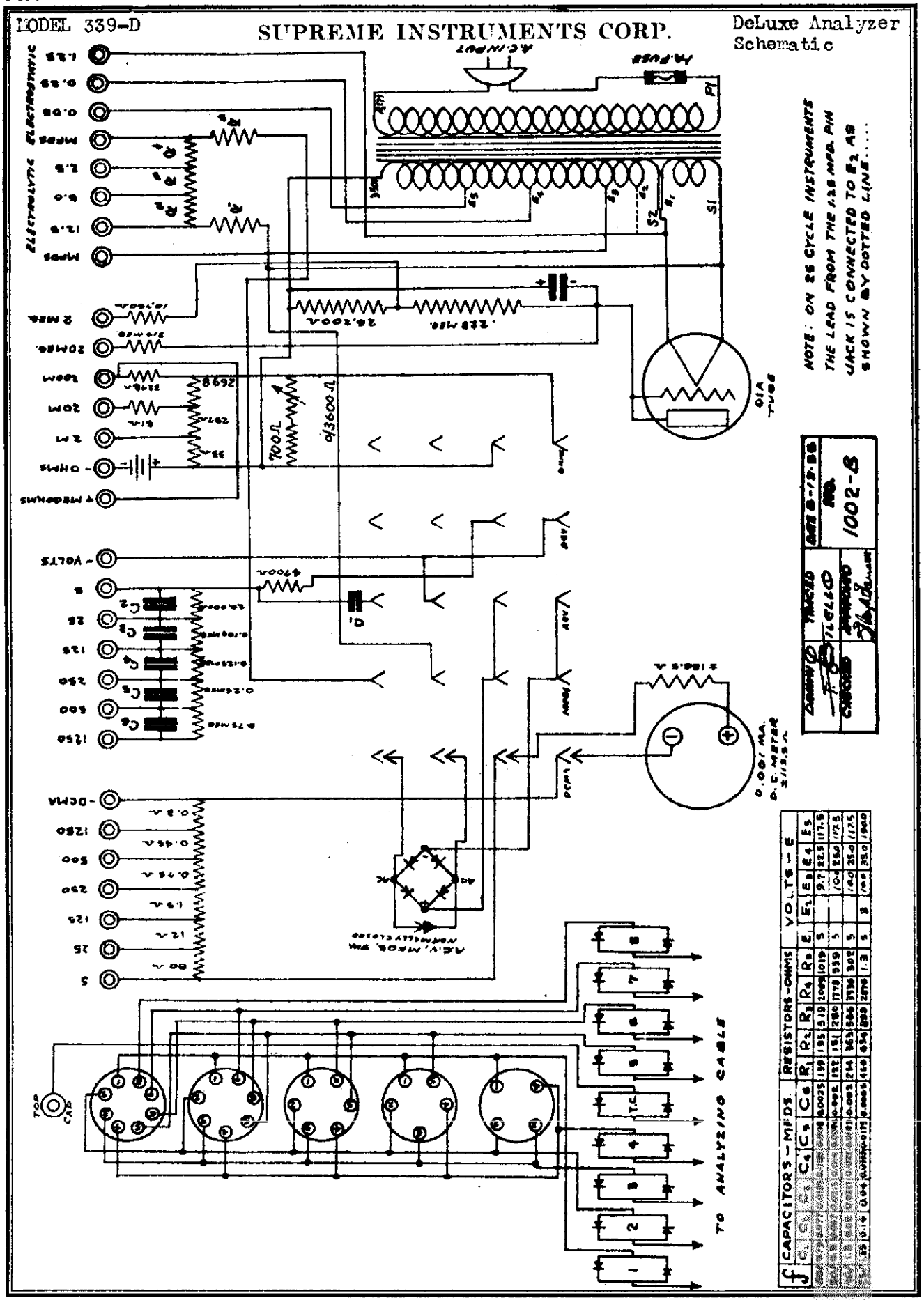

CAPACITORS – MFDS.					RESISTORS – OHMS					VOLTS – E				
C1	C2	C3	C4	C5	R1	R2	R3	R4	R5	E1	E2	E3	E4	E5
.05	.1	.25	.5	1.0	195	195	519	1095	1019	5	—	9.7	22.5	117.5
.05	.1	.25	.5	1.0	181	181	280	1778	959	5	—	10.4	25.0	117.5
.05	.1	.25	.5	1.0	214	343	586	3136	302	5	—	10.0	25.0	117.5
.05	.1	.25	.5	1.0	416	654	899	2276	1.3	5	—	10.0	35.0	190.0

©John F. Rider, Publisher

Alignment, Parts

L. TATRO PRODUCTS CO.

MODEL EN6-4
Schematic, Socket

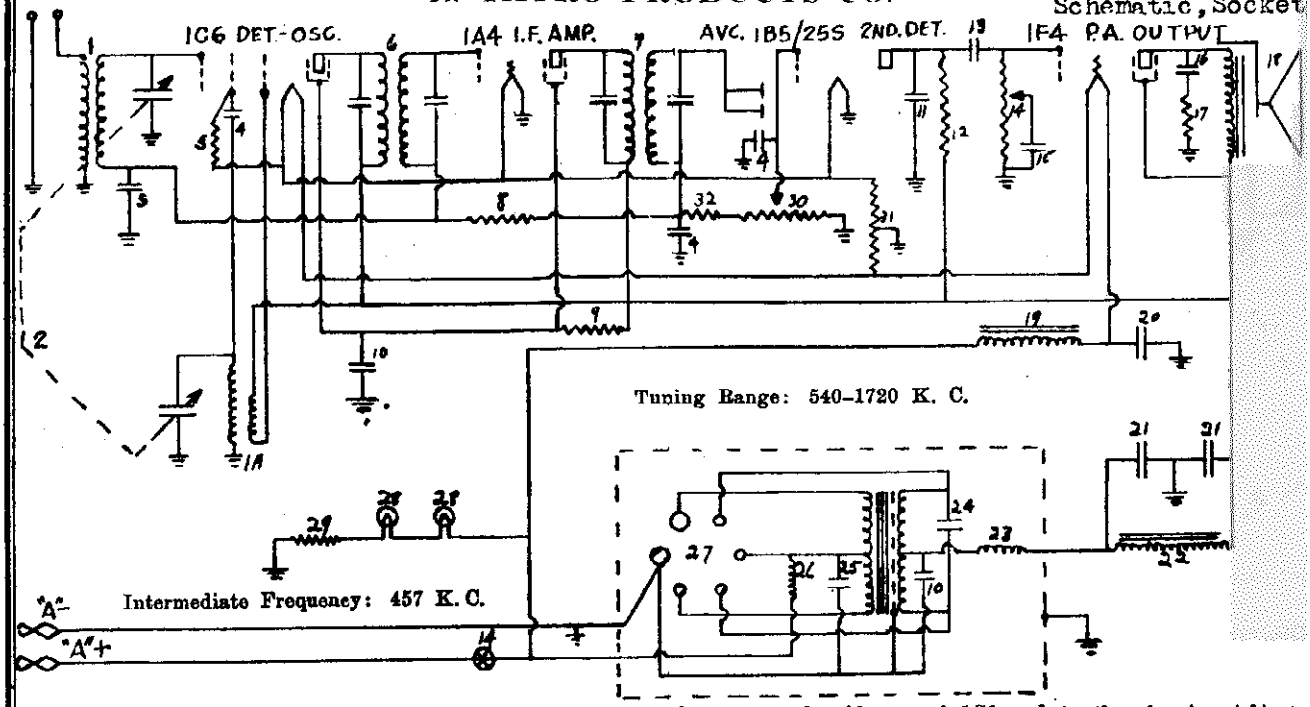

I. F. Adjustments—A. Connect test oscillator output leads to control grid cap of 1C6 and to the chassis. Adjust oscillator to 457 K. C. and turn the receiver to a point where no interference is received from the heterodyne oscillator or from a local station. B. Adjust trimmers in top of I. F. coil shield cans for maximum output from the receiver as shown by an output meter.

R. F. Adjustments—Check dial calibration of dial scale by turning the variable condenser to the "full-in" position and make sure that the dial pointer registers the end of the scale. Then tune to 1400 K. C. on the dial, adjust test oscillator to 1400 K. C. and adjust trimmers on top of tuning condenser for maximum output as shown by an output meter.

Vibrator Unit—The vibrator power unit supplies the proper B and C voltages for the set's operation. It contains a plug-in vibrator, step-up transformer, and filter system. No adjustments should be undertaken on the vibrator unit, as it has been properly adjusted with precision equipment for a long service life.

Voltages—Proper voltage in 1F4 Screen and R. F. and I. F. tube plates on a fully charged battery is 125 to 130 volts. R. F. and I. F. Screen voltage is 55 to 60 volts.

Diagram Number	Part Number	Name
1.—1A	10N-1	Antenna Osc. Coil.
2.	9N-1	Variable Condenser.
3.	5N-1	.05 Mf. 400 V. Condenser.
4.	7N-1	.0001 Mf. Mica Condenser.
5.	4N-1	50 M. Ohm Resistor.
6.	11N-1	Input I. F. Coil.
7.	11N-2	Output I. F. Coil.
8.	4N-2	1 Megohm Resistor.
9.	4N-3	25 M. Ohm.
10.	5N-2	.1 Mf. 400 V. Condenser.
11.	5N-3	.00025 Mf. 600 V. Condenser
12.	4N-4	250 M. Ohm Resistor.
13.	5N-4	.01 Mf. 400 V. Condenser.
14.	16N-1	.5 Megohm Potentiometer and Switch.
15.	5N-5	.005 Mf. 600 V. Condenser.
16.	5N-6	.0015 Mf. 600 V. Condenser.
17.	4N-5	38 M. Ohm Resistor.
18.	35N-1	Loud Speaker.
19.	14N-1	Filament Choke.
20.	6N-1	10 Mf. 6 V. Electrolytic Condenser.
21.	6N-2	8 Mf. 6 V. Electrolytic Condenser.
22.	14N-2	Filter Choke.
23.	12N-1	Secondary R. F. Choke.
24.	5N-7	.005 Mf. 1600 V. Buffer Condenser.
25.	5N-8	.5 Mf. 160 V. Condenser.
26.	12N-2	Primary R. F. Choke.
27.		Vibrator (Socket Connections).
28.	32N-1	Dial Light Bulbs, 6 V- .06 Amp.
29.	3N-1	33 Ohm Wire Wound Resistor.
30.	16N-2	.5 Megohm Volume Control.
31.	3N-2	400 Ohm Wire Wound Center Tapped Resistor.
32	4N-5	38 M. Ohm Resistor.
	17N-1	Dial Unit Complete.
	34N-1	Cabinet.

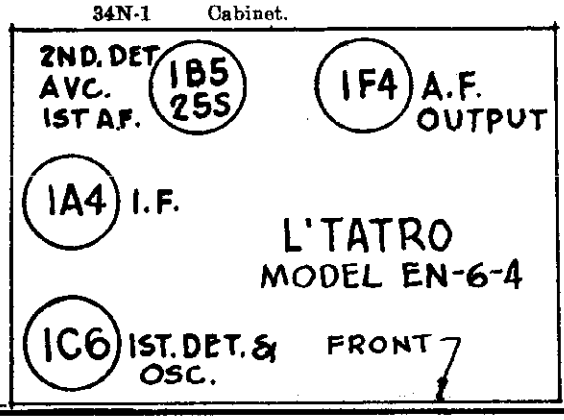

©John F. Rider, Publisher

MODEL IN-25
Schematic. Socket

L. TATRO PRODUCTS CO.

Alignment, Parts

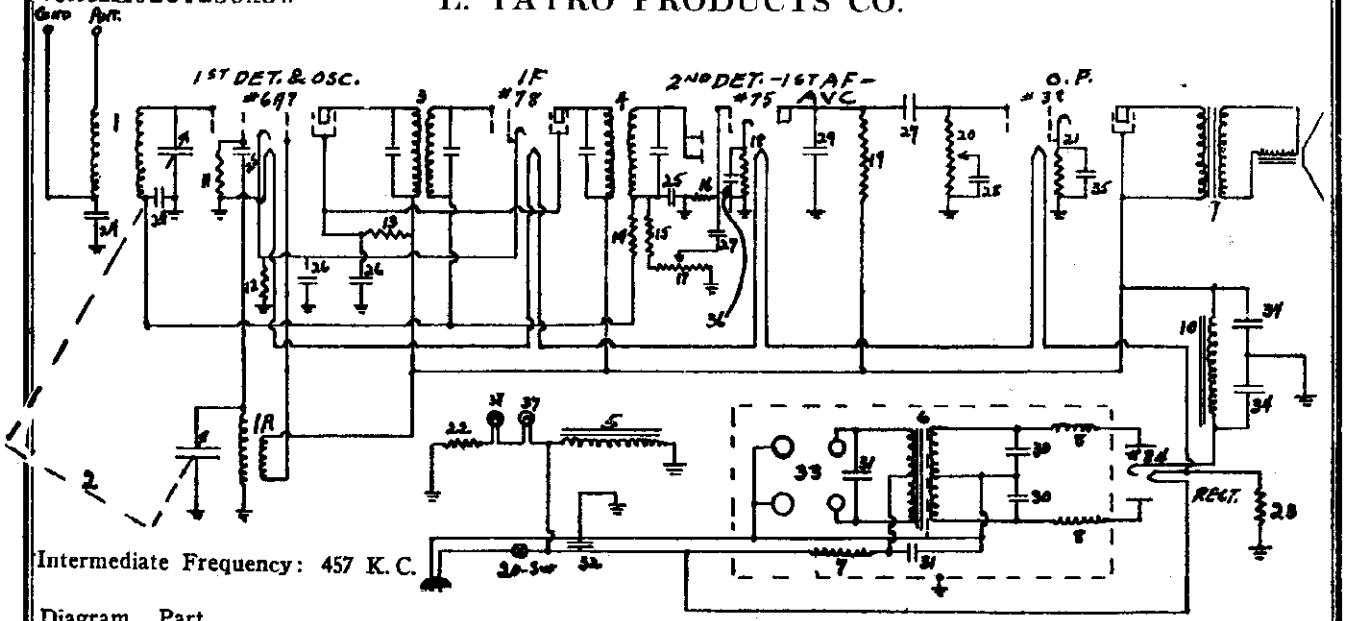

Intermediate Frequency: 457 K. C.

Diagram No.	Part No.	Description
1.—1A	10N-1	Antenna Osc. Coil.
2.	9N-1	Variable Condenser.
3.	11N-1	Input I. F. Coil.
4.	11N-2	Output I. F. Coil.
5.		Speaker Field.
6.	13N-3	Power Transformer.
7.	12N-1	Primary R. F. Choke.
8.	12N-1	Secondary R. F. Choke
9.	35N-3	Speaker.
10.	14N-4	Filter Choke.
11.	4N-1	50 M. Ohm Resistor.
12.	4N-10	500 Ohm Resistor.
13.	4N-5	38 M. Ohm Resistor.
14.	4N-2	1 Meg Ohm Resistor.
15.	4N-5	38 M. Ohm Resistor.
16.	4N-8	500 M. Ohm Resistor.
17.	16N-2	½ Meg. Volume Control
18.	4N-11	1500 Ohm Resistor.
19.	4N-4	250 M. Ohm Resistor.
20.	16N-1	½ Meg. Tone Control.
21.	4N-11	1500 Ohm Resistor.
22.	3N-3	150 Ohm Wire Wound Res
23.	3N-4	125 Ohm Wire Wound Res
24.	5N-1	.05 Mf. 400 Volt Cond
25.	7N-1	.0001 Mf. Mica Cond
26.	5N-2	.1 Mf. 400 Volt Cond
27.	5N-5	.005 Mf. 600 Volt Cond
28.	5N-10	.0025 Mf. 600 Volt Cond
29.	5N-3	.00025 Mf. 600 Volt Cond
30.	5N-11	.02 Mf. 800 Volt Cond
31.	5N-8	.5 Mf. 160 Volt Cond
32.	5N-9	.25 Mf. 200 Volt Cond
33.		Vibrator Socket Conn
34.	6N-4	8 Mf. 350 Electrolytic Cond
35.	6N-5	10 Mf. 25 Electrolytic Cond
36.	6N-1	10 Mf. 6 Electrolytic Cond
37	32N-1	.06A, 2 Volt Dial Lights.
	17N-1	Dial Assembly Complete.
	34N-1	Cabinet.

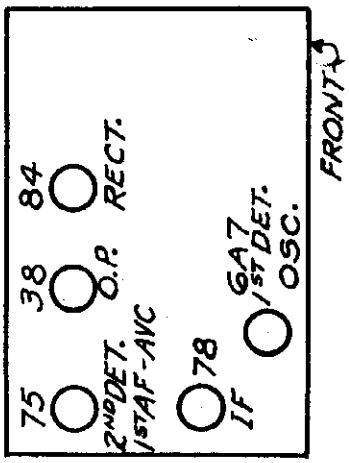

Power Source: 28 V to 36 V D. C.

Power Output: Undistorted 1.75 Watt, Maximum 2.25 Watts.

I. F. Adjustments—

(A) Connect test oscillator output leads to the control grid of 6A7 tube and chassis. Adjust oscillator to 457 K. C. and tune the receiver to a point where no interference is encountered from the heterodyne oscillator or from a local station.

(B) Adjust Trimmer Condensers in top of I. F. cans for maximum output as shown by an output meter.

R. F. Adjustments—

Check dial calibration by turning the variable condenser to the full-in position, and make sure that the dial pointer registers the end of the scale. Then tune to 1400 K. C. on the dial, adjust test oscillator to 1400 K. C. and adjust trimmer condensers on top of tuning condensers for maximum output as shown by an output meter.

Voltages—

Proper voltages at the rectifier cathode on a 33-volt line is from 190 to 210 volts.

©John F. Rider, Publisher

MODELS O-4626, P-462
Schematic, Parts

L. TATRO PRODUCTS CO.

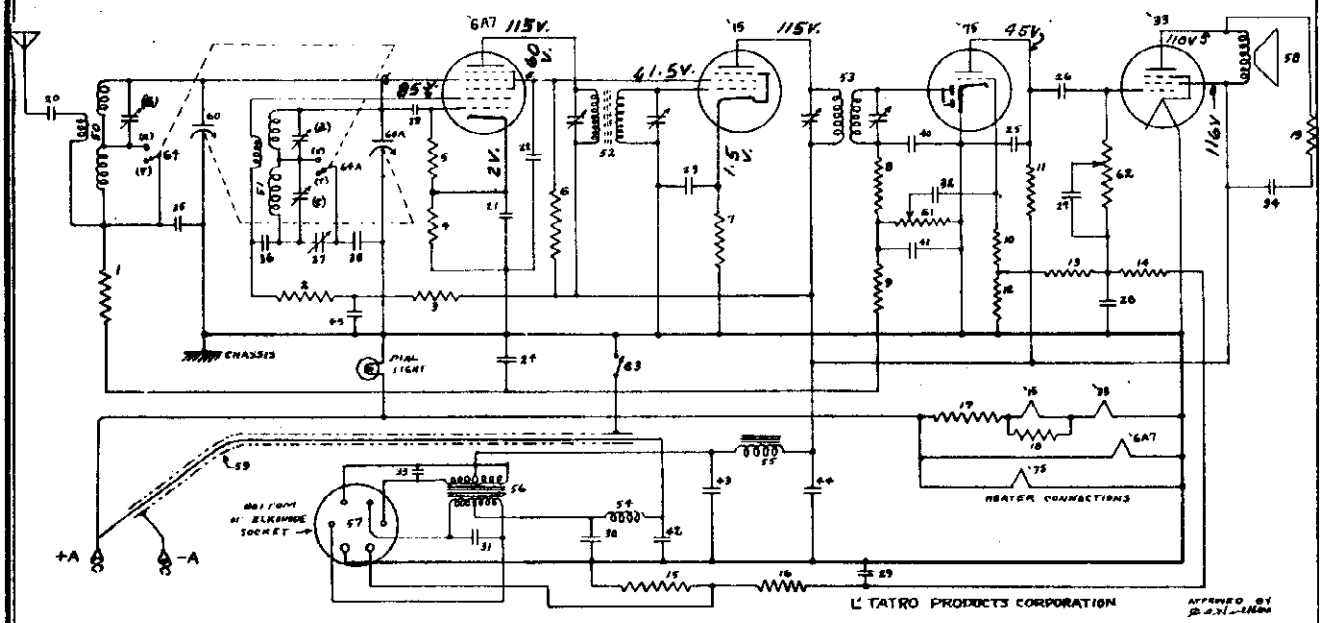

I.F. Peak 456 K.C.

ITEM NO.	PART NO.	DESCRIPTION
1	2L-44	100M ohms 1/4 watt
2	2L-26	7500 ohms 1/4 watt
3	2L-27	10M ohms 1/4 watt
4	2L-14	450 ohms 1/4 watt
5	2L-37	50M ohms 1/4 watt
6	2L-75	25M ohms 1/4 watt
7	2L-17	800 ohms 1/4 watt
8	2L-37	50M ohms 1/4 watt
9	2L-57	1 MEG ohms 1/4 watt
10	2L-57	1 MEG ohms 1/4 watt
11	2L-49	250M ohms 1/4 watt
12	2L-44	100M ohms 1/4 watt
13	2L-57	1 MEG ohm 1/4 watt
14	2L-44	100M ohms 1/4 watt
15	2L-17A	800 ohms 1/2 watt
16	2L-44	100M ohms 1/4 watt
17	1L-1E	10 ohms 5 watt w.w.
18	2L-4A	53 ohms 1/2 watt
19	2L-31	20M ohms 1/4 watt
20	3L-16	.02 MFD 400 V. paper
21	3L-18	.10 MFD 400 V. paper
22	3L-18	.10 MFD 400 V. paper
23	3L-18	.10 MFD 400 V. paper
24	3L-16	.02 MFD 400 V. paper
25	3L-23	.0005 MFD 600 V. paper
26	3L-16	.02 MFD 400 V. paper
27	3L-40	.005 MFD 600 V. paper
28	3L-9H	.25 MFD 200 V. paper
29	3L-9H	.25 MFD 200 V. paper
30	3L-44H	.50 MFD 150 V. paper
31	3L-44H	.50 MFD 150 V. paper
32	3L-16	.02 MFD 400 V. paper
33	3L-42H	.005 MFD 1600 V. paper
34	3L-25	.01 MFD 600 V. paper
35	5L-13	.0025 MFD MICA
36	5L-10	.0015 MFD MICA
37	5L-1	Adjustable MICA
38	5L-10	.0015 MFD MICA
39	5L-2	.0001 MICA
40	5L-2	.0001 MICA
41	5L-2	.0001 MICA
42	3L-59S	.5 MFD 120 V. paper
43	4L-1	8 MFD 250 V. electrolytic
44	4L-1	8 MFD 250 V. electrolytic
45	4L-1	8 MFD 250 V. electrolytic
46		
47		
48		
49		
50	8L-15	Antenna coil
51	8L-16	Oscillator coil
52	8L-12	I.F. transformer 456 K.C.
53	8L-3	i.f. transformer 456 K.C.
54	8L-4	choke
55	9L-11	Filter Choke
56	9L-1	Power Transformer
57	25L-25	Elkonode Socket Assembly
58	18L-9	Orthovox Speaker
59	25L-33	Shielded Battery Cable
60	7L-4	Variable Condenser
60A		Part of Item 60
61	10L-1	Volume Control
62	10L-11	Tone Control
63		Part of Item 62
64	16L-3	Selector Switch
64A		Part of Item 64

©John F. Rider, Publisher

MODELS Q-5636, R-5636, S-5636
Schematic, Parts

I. TATRO PRODUCTS CO.

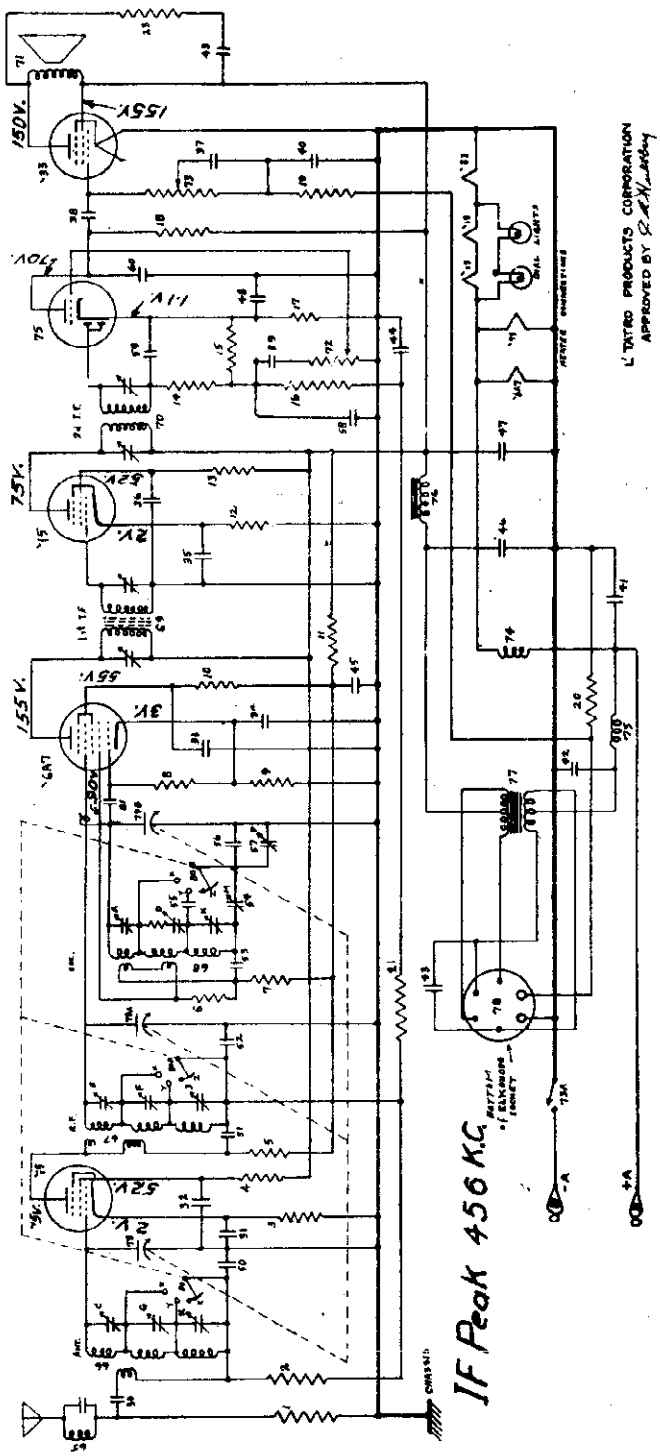

Item No.	Part No.	Description								
		21						64		
		22						65	8L-22	456 K.C. IF Trap
		23	2L-31A	20M ohms 1/2 watt	43	3L-44H	0.5 Mfd. 160 V. Paper	66	8L-37	Antenna Trans.
1	2L-27	10M ohms 1/4 watt	24		44					
2	2L-44	100M ohms 1/4 watt			45	4L-1	8.0 Mfd. 250 V. Electrolytic	67	8L-38	R.F. Trans.
3	2L-17	800 ohms 1/4 watt	25		46	4L-1	8.0 Mfd. 250 V. Electrolytic	68	8L-39	Osc. Trans.
4	2L-49	250M ohms 1/4 watt	26		47	4L-1	8.0 Mfd. 250 V. Electrolytic	69	8L-24	IF Trans. 456 K.C.
			27		48	4L-6	20.0 Mfd. 6 V. Electrolytic	70	8L-26	IF Trans. 456 K.C.
5	2L-25	15M ohms 1/4 watt	28		49	3L-25	.01 Mfd. 600 V. Paper			
6	2L-31	20M ohms 1/4 watt			50	5L-12	.002 Mfd. Mica	71	18L-9	Speaker
7	2L-27	10M ohms 1/4 watt	29					72	10L-5	Volume Control
8	2L-37	50M ohms 1/4 watt	30	3L-16	.02 Mfd. 400 V.Paper 51		5L-12	.002 Mfd. Mica	73	10L-15	Tone Control
			31	3L-17	.05 Mfd. 400 V.Paper 52		5L-13	.0025 Mfd. Mica	73A		Part of Item 73
9	2L-16	600 ohms 1/4 watt	32	3L-17	.05 Mfd. 400 V.Paper 53		5L-7	.001 Mfd. Mica			
10	2L-33	30M ohms 1/4 watt				54	8L-8	6 plate variable (Mica)	74	8L-21	R. F. Choke
11	2L-26	7500 ohms 1/4 watt	33	3L-16	.02 Mfd. 400 V.Paper				75	8L-4	R. F. Choke
12	2L-15	500 ohms 1/4 watt	34	3L-17	.05 Mfd. 400 V.Paper 55		5L-19	.0096 Mfd. Mica	76	9L-11	Filter Choke
			35	3L-18	.10 Mfd. 400 V.Paper 56		5L-26	.0009 Mfd. Mica	77	9L-4	Power Trans.
13	2L-44	100M ohms 1/4 watt	36	3L-18	.10 Mfd. 400 V.Paper 57		8L-7	4 plate variable (Mica)			
14	2L-37	50M ohms 1/4 watt				58	5L-2	.0001 Mfd. Mica	78	25L-25	Elkonode Socket
15	2L-53	500M ohms 1/4 watt	37	3L-40	.005 Mfd. 600 V.Paper				79	7L-3	Variable Condenser
16	2L-57	1 Meg ohm 1/4 watt	38	3L-16	.02 Mfd. 400 V.Paper 59		5L-2	.0001 Mfd. Mica	79A		Part of Item 79
			39	3L-16	.02 Mfd. 400 V.Paper 60		5L-2	.0001 Mfd. Mica	79B		Part of Item 79
17	2L-24	5000 ohms 1/4 watt	40	3L-50	1.0 Mfd. 200 V.Paper 61		5L-2	.0001 Mfd. Mica			
18	2L-49	250M ohms 1/4 watt				62					
19	2L-53	500M ohms 1/4 watt	41	3L-595	0.5 Mfd. 120 V.Paper				80	16L-2	Selector Switch
20	2L-178	800 ohms 1 watt	42	3L-595	0.5 Mfd. 120 V.Paper 63				80A & B		Parts of Item 80

©John F. Rider, Publisher

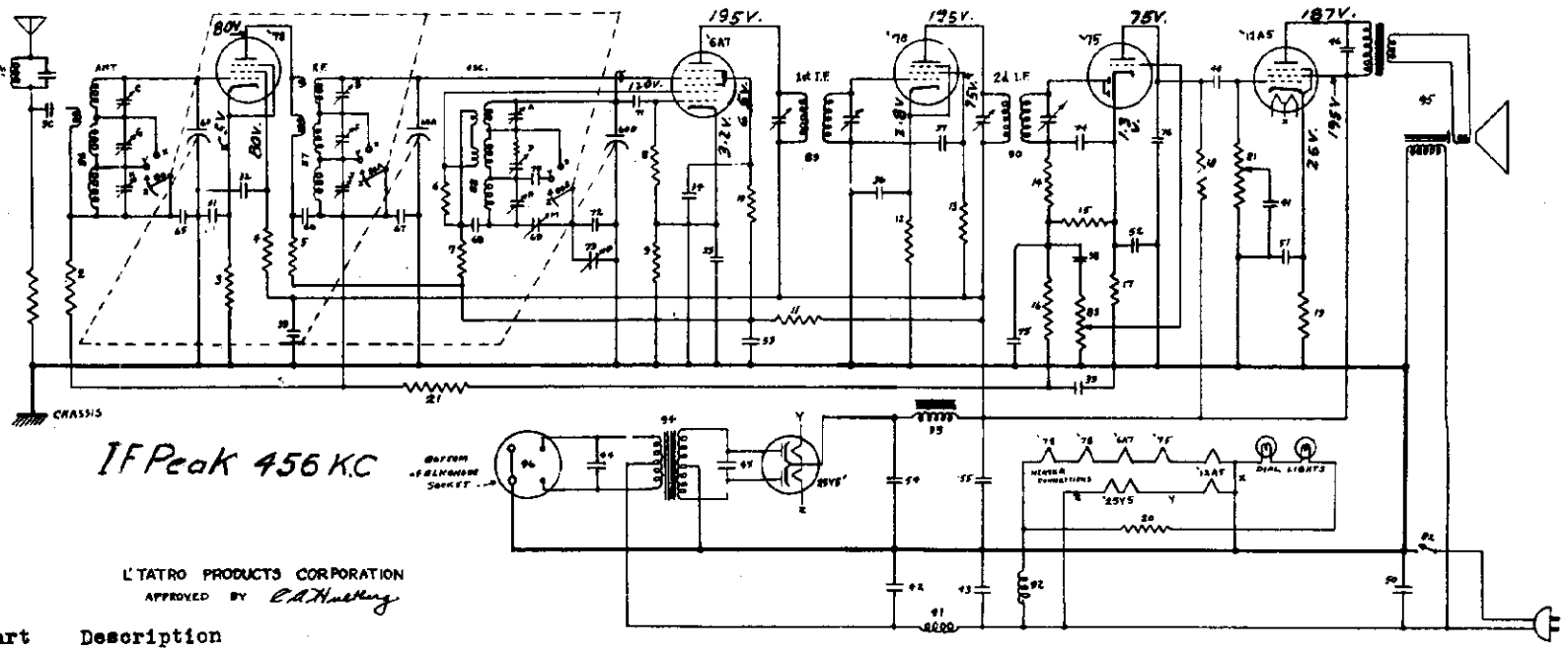

Item No.	Part No.	Description							
1	2L-27	10M ohms 1/4 watt	23				50	4L-15	20 Mfd. 40 V. NP Electro
2	2L-44	100M ohms 1/4 watt	24				51	4L-11	10 Mfd. 25 V. Electrolyt
3	2L-18	1000 ohms 1/4 watt					52	4L-6	20 Mfd. 6 V. Electrolyt
4	2L-44	100M ohms 1/4 watt	30	3L-16	.02	Mfd. 400 V.	53	4L-1	8 Mfd. 250 V. Electrolyt
			31	3L-17	.05	Mfd. 400 V.			
5	2L-29	15M ohms 1/4 watt	32	3L-17	.05	Mfd. 400 V.	54	4L-3	8 Mfd. 450 V. Electrolyt
6	2L-31	20M ohms 1/4 watt	33	3L-17	.05	Mfd. 400 V.	55	4L-3	8 Mfd. 450 V. Electrolyt
7	2L-27	10M ohms 1/4 watt					56		
8	2L-37	50M ohms 1/4 watt	34	3L-16	.02	Mfd. 400 V.	57		
			35	3L-17	.05	Mfd. 400 V.			
9	2L-16	600 ohms 1/4 watt	36	3L-18	.10	Mfd. 400 V.	59		
10	2L-35	38M ohms 1/4 watt	37	3L-18	.10	Mfd. 400 V.	60	7L-3	Variable Condenser
11	2L-26	7500 ohms 1/4 watt					60A		Part of Item 60
12	2L-15	500 ohms 1/4 watt	38	3L-16	.02	Mfd. 400 V.	60B		Part of Item 60
			39	3L-16	.02	Mfd. 400 V.			
13	2L-44	100M ohms 1/4 watt	40	3L-16	.02	Mfd. 400 V.	65	5L-12	.002 Mfd. Mica
14	2L-37	50M ohms 1/4 watt	41	3L-40	.005	Mfd. 600 V.	66	5L-12	.002 Mfd. Mica
15	2L-53	500M ohms 1/4 watt					67	5L-13	.0025 Mfd. Mica
16	2L-57	1 Meg ohm 1/4 watt	42	3L-59S	.5	Mfd. 120 V.	68	5L-7	.001 Mfd. Mica
			43	3L-59S	.5	Mfd. 120 V.			
17	2L-24	5000 ohms 1/4 watt	44	3L-44H	.5	Mfd. 160 V.	69	6L-8	6 plate variable Mica
18	2L-49	250M ohms 1/4 watt	45	3L-42H	.005	Mfd.1600 V.	70	5L-19	.0096 Mfd. Mica
19	1L-20C	750 ohms 2 watt					71	5L-2	.0001 Mfd. Mica
20	1L-17F	150 ohms 10 watt	46	3L-26	.02	Mfd. 600 V.	72	5L-26	.0009 Mfd. Mica
			47						
21	2L-44	100M ohms 1/4 watt	48				73	6L-7	4 plate variable Mica
22			49						

74	5L-2	.0001 Mfd. Mica
75	5L-2	.0001 Mfd. Mica
76	5L-2	.0001 Mfd. Mica
80	16L-2	Selector Switch
80A		Part of Item 80
80B		Part of Item 80
81	10L-15	Tone Control
82		Part of Item 81
83	10L-5	Volume Control
84		
85	8L-22	456 K. C. IF Trap
86	8L-37	Antenna Trans.
87	8L-38	R. F. Transformer
88	8L-39	Oscillator Trans.
89	8L-25	I.F. Trans. 456 K.C.
90	8L-26	I.F. Trans. 456 K. C
91	8L-23	R.F. Choke
92	8L-20	R.F. Choke
93	9L-11	Filter Choke
94	9L-2	Power Transformer
95	18L-8	Dynamic Speaker
96	25L-26	Elkonode Socket

©John F. Rider, Publisher

GENERAL NOTES & ALIGNMENT PROCEDURE FOR
L'TATRO MODELS Q-5636, R-5636, S-5636, W-6236, X-6236, Y-6236

The R.F. and I.F. circuits of these chassis are identical with the exception of the tube complements. Due to the combination of inductive and capacitive coupling employed in the antenna stage very uniform gain results in all three bands. IT IS TO BE NOTED HOWEVER THAT THIS COMBINATION REQUIRES SPECIAL CARE WHEN USING A SIGNAL GENERATOR FOR ALIGNMENT PURPOSES. The .002 MFD. mica condenser which provides the capacity coupling is also a part of the tuned grid circuit. If a signal generator is connected from the antenna lead to chassis without inserting the proper dummy antenna the .002 MFD. condenser will be short circuited, and will cause the R.F. input circuit to resonate at frequencies much lower than the dial reading.

For the high frequency band alignment (both H.F. bands) ALWAYS USE A 400 OHM CARBON RESISTOR BETWEEN THE SIGNAL GENERATOR AND THE ANTENNA LEAD. When aligning the BROADCAST BAND ALWAYS USE A .0002 MFD. CONDENSER BETWEEN THE SIGNAL GENERATOR AND THE ANTENNA LEAD.

DO NOT ATTEMPT TO ALIGN THESE RECEIVERS WITHOUT THE USE OF A CORRECTLY CALIBRATED SIGNAL GENERATOR OF RELIABLE MAKE HAVING GOOD ATTENUATOR CONSTRUCTION. On all models connect a high resistance output meter across the plate and screen terminals of the output tube, using a larger condenser in series with the meter to prevent D.C. plate current from flowing through the meter. KEEP THE SIGNAL GENERATOR INPUT LOW. It is preferable that the output of the receiver should not be allowed to exceed 200 milliwatts during the "peaking" operation on any trimmer. The volume and tone control knobs should be advanced to the full open position during alignment. Failure to observe this precaution will usually result in misalignment due to frequency shift caused by A.V.C. or due to overload of the I.F. amplifier tube.

I.F. ALIGNMENT - 456 K.C.

In order not to disturb the normal bias voltage applied to the tubes during alignment, it is advisable that the grid clips be left on the tubes, and that the signal be applied to the grid clips through a .005 MFD. condenser connected to the high side of the signal generator, and return the ground side of the signal generator to the receiver chassis. During alignment of 32 volt receivers it is advisable that a .5 MFD. condenser be connected between the ground side of the generator and the receiver chassis to allow the signal generator to be well grounded.

With the input connected to the I.F. tube grid, adjust the trimmer condenser on the second I.F. transformer for maximum output. Reduce the signal input and connect the signal source to the 6A7 grid and adjust the trimmers on the first I.F. transformer for maximum response.

H.F. BAND ALIGNMENT - USE 400 OHM DUMMY ANTENNA

Always use short leads from the dummy antenna (400 ohm resistor) to the generator and receiver. Also a short heavy lead (or .5 MFD. condenser with heavy leads) from the ground side of generator to receiver chassis.

Set the signal generator frequency at 16.0 megacycles. With the selector switch on point X-(clockwise position) and the receiver dial at 16 M.C. Adjust trimmer A in both directions. Two points should be found which will allow 16 M. C. signals to come through. Always set A at the lower capacity setting that gives 16 M.C. response. The center coil is the oscillator coil and the trimmer furthest from the selector switch is trimmer A.

Next vary the generator (or reciever dial) frequency very slowly back and forth and adjust trimmer B for maximum response on the output meter. The R. F. coil is the coil with the open side exposing the trimmer screws. Trimmer B is the trimmer furthest from the selector switch.

Next adjust the trimmer C, which is on the antenna coil and is the trimmer nearest to the selector switch, to give the greatest response on the output meter.

Now set the receiver dial and signal generator at 6.0 MEGACYCLES. Slowly tune the receiver dial both ways from 6 M.C. and slowly adjust trimmer "P" which is mounted on the receiver chassis. The setting giving greatest output is the desired setting. If considerable change from the original setting is required, peak the trimmer and realign at 16 and 6 M. C.

POLICE BAND ALIGNMENT: USE 400 OHM DUMMY ANTENNA

Set the selector switch in the center position (point Y), turn the dial to 3.0 megacycles and set the signal generator at 3.0 megacycles. Adjust the center oscillator trimmer D to bring in signal. Then adjust F & G, the center trimmers on the R. F. and antenna coils for maximum response.

BROADCAST BAND ALIGNMENT USE .0002 MFD. DUMMY ANTENNA

Set the selector switch on point Z-(Counter-clockwise position). Set the receiver dial at 1400 K.C. and feed a 1400 K.C. signal through the .0002 condenser to the antenna lead. Adjust trimmer H (oscillator trimmer nearest to the selector switch) to bring in signal. Adjust trimmer J (R.F. coil trimmer nearest to selector switch) for maximum response. Then adjust trimmer K (antenna coil trimmer furthest from selector switch) for maximum output.

Set receiver dial at 600 K. C. and tune signal generator to same frequency. Slowly turn tuning control back and forth and adjust trimmer M (mounted on the coil assembly plate) in both directions until the maximum response point is reached. If a large readjustment is required from the original adjustment, repeat BC band alignment.

If trouble is occasioned during alignment procedure due to broadcast signals interfering with the operation, the alignment may be made on the adjacent channal, that is 10 K.C. from the usual alignment frequency. For example if a strong station causes 600 K.C. interference set the dial and signal generator at either 590 or 610 K.C. The same applies to 1400 K.C. No appreciable error will result from aligning the trimmers at a point 10 K.C. from the recommended frequency.

The complete receiver after above procedure should be in correct adjustment, and may be checked on the air. Under normal conditions a single wire antenna 100 feet long with lead in at one end is recommended.

GENERAL NOTES AND ALIGNMENT PROCEDURE
MODELS 04626, P4626

The R.F. and I.F. circuits on these receivers are identical with the exception of tube complements. Due to the combination inductive and capacitive coupling used in the antenna stage, very uniform gain results IS TO BE NOTED HOWEVER THAT THIS COMBINATION REQUIRES SPECIAL CARE WHEN USING A SIGNAL GENERATOR FOR ALIGNMENT PURPOSES. The .0085 mica condenser which provides the capacity coupling is also a part of the tuned grid circuit. If a signal generator is connected from antenna to chassis without inserting the proper dummy antenna the .0085 MFD condenser will be short circuited and will cause the grid circuit of the 6A7 tube to resonate at a much too low frequency.

For the BROADCAST BAND ALIGNMENT ALWAYS USE A .0002 MFD CONDENSER BETWEEN THE SIGNAL GENERATOR AND THE ANTENNA LEAD. for the HIGH FREQUENCY BAND ALIGNMENT ALWAYS USE A 400 OHM CARBON RESISTOR BETWEEN THE SIGNAL GENERATOR AND THE ANTENNA LEAD.

DO NOT ATTEMPT TO ALIGN THESE RECEIVERS WITHOUT THE USE OF A CORRECTLY CALIBRATED SIGNAL GENERATOR OF RELIABLE MAKE. On all models connect a high resistance output meter across the plate and screen of the output tube, using a large condenser in series with the meter to prevent D.C. plate current from flowing through the meter. KEEP THE SIGNAL GENERATOR INPUT LOW and leave the volume control and tone control wide open to avoid misalignment which will result if high input is used (due to frequency shift with AVC or due to overload of the I.F. tube).

I.F. ALIGNMENT 456 K.C.
Connect signal generator through a .005 MFD condenser to the I.F. tube grid cap, and the ground side of the generator to the chassis. Adjust the trimmers on item 55 for maximum output. If high output or double peaks occur, reduce the input from the signal generator and readjust. Next reduce the input and connect the .005 MFD condenser to the grid cap of the 6A7 and adjust the trimmer condensers on ITEM 58 for maximum output. SLIGHTLY GREATER OUTPUT MAY BE OBTAINED BY READJUSTING THE TRIMMERS ON ITEM 55. THIS SHOULD NOT BE DONE UNLESS ABSOLUTELY NECESSARY AS IT INTRODUCES SOME REGENERATION AND MAY CAUSE EXCESSIVE HISS WHEN A CARRIER IS TUNED IN.

H.F. BAND ALIGNMENT: USE 400 OHM DUMMY ANTENNA.
First set signal generator and receiver dial at 16 MEGACYCLES, and receiver selector switch ON POINT (X). Turn trimmer (a) in and out--two points will be found that will allow 16 MC signals to come through. Always set (a) at the lower capacity setting that gives 16 MC response. (The H.F. trimmers (a) and (b) are color coded red for easy identification).

Next vary the generator frequency back and forth slowly and adjust trimmer (b) for maximum signal output, when this is obtained the H.F. band is properly aligned.

B.C. BAND ALIGNMENT: USE .0002 MFD DUMMY ANTENNA.
Set signal generator at 1400 K.C. Set selector switch on point (Y) and receiver dial to 1400 K.C. Adjust trimmer C to bring in signal.

Set generator near 600 K.C. (right on 600 K.C. if no local signal interfers), tune radio set to signal generator. "Rock" tuning condenser back and forth slowly and adjust item 37 simultaneously until maximum response is obtained. If considerable change from the original value of 37 adjustment is required--repeat the B.C. band alignment procedure.

The complete receiver should now be in correct adjustment, and may be checked on the air. Under normal conditions a single wire antenna 100 ft. long with lead in at one end is recommended.

If A.C. hum is experienced during alignment operations, try grounding the signal generator or the receiver chassis to a good ground.

If in a particular locality hum comes in with each station tuned in, this may be remedied by connecting a 10,000 ohm carbon resistor from the antenna side of item 20 to chassis. If hum still persists the antenna should be strung in a different direction so as not to pick up hum from power lines, etc.

©John F. Rider, Publisher

TRANSFORMER CORP. OF AMER.

MODEL C-10
Schematic
Voltage

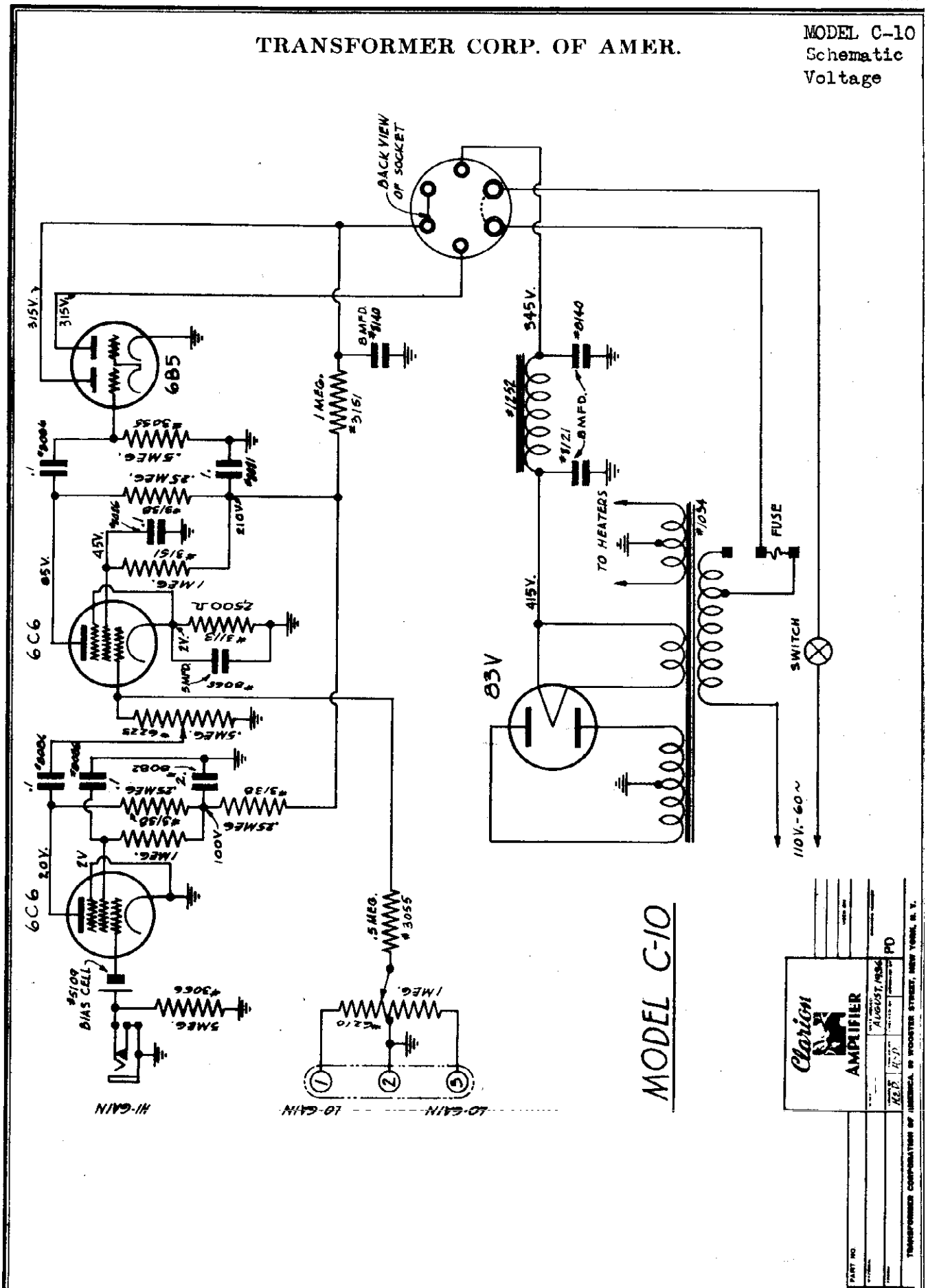

©John F. Rider, Publisher

MODEL C-16
MODEL C-17
Schematics
Voltage

TRANSFORMER CORP. OF AMER.

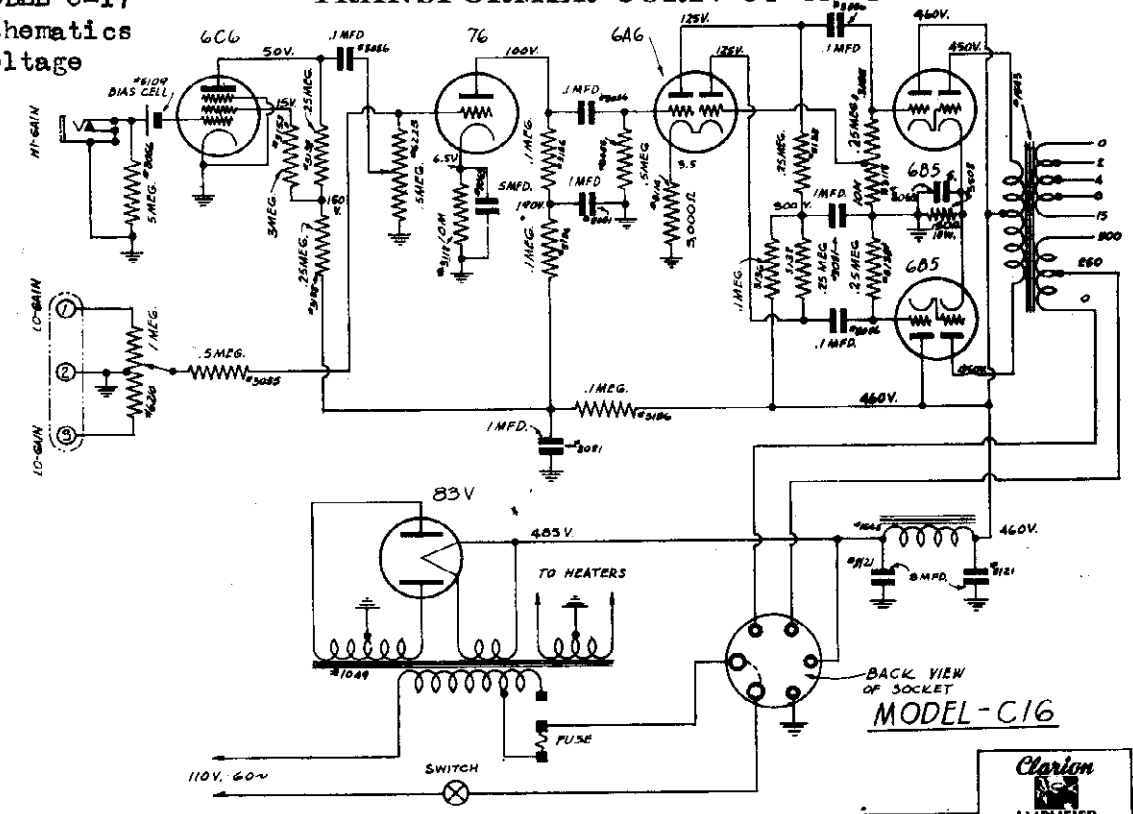

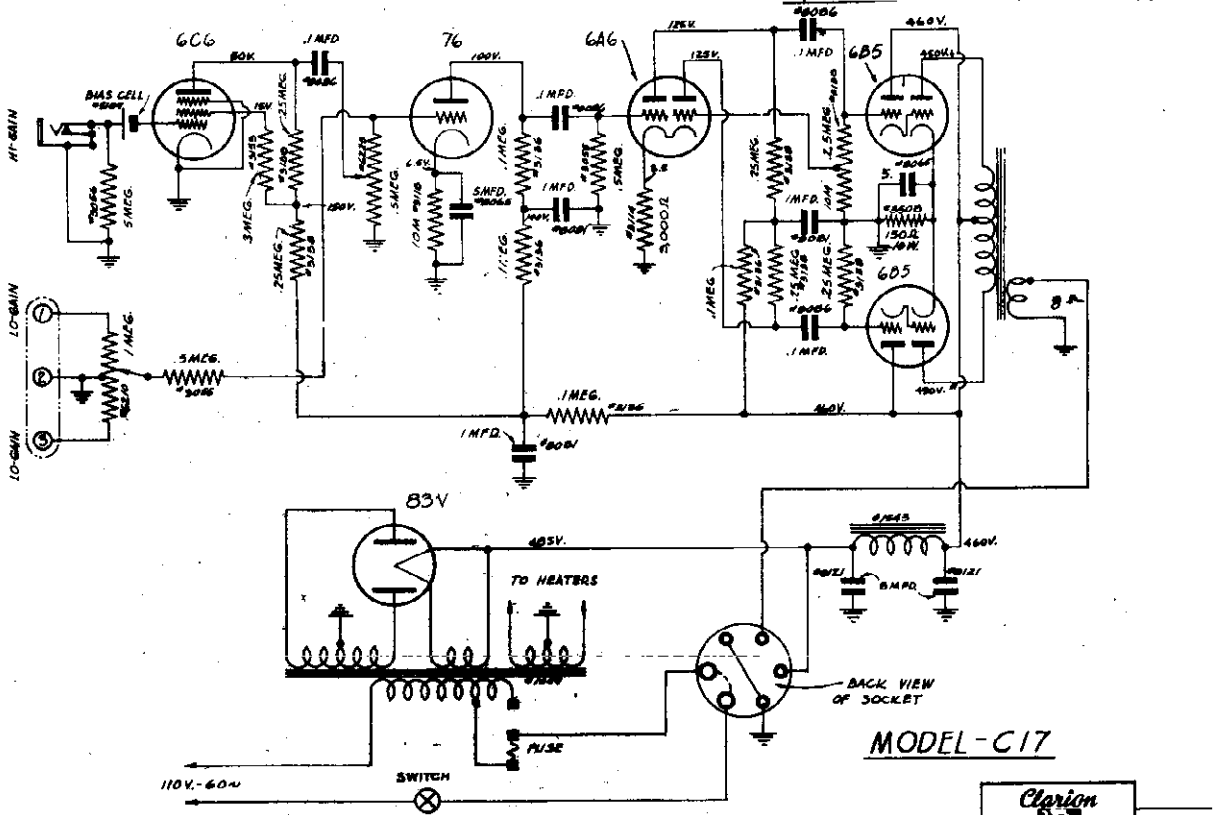

©John F. Rider, Publisher

MODEL C-21
MODEL C-27
Schematics
Voltage

TRANSFORMER CORP. OF AMER.

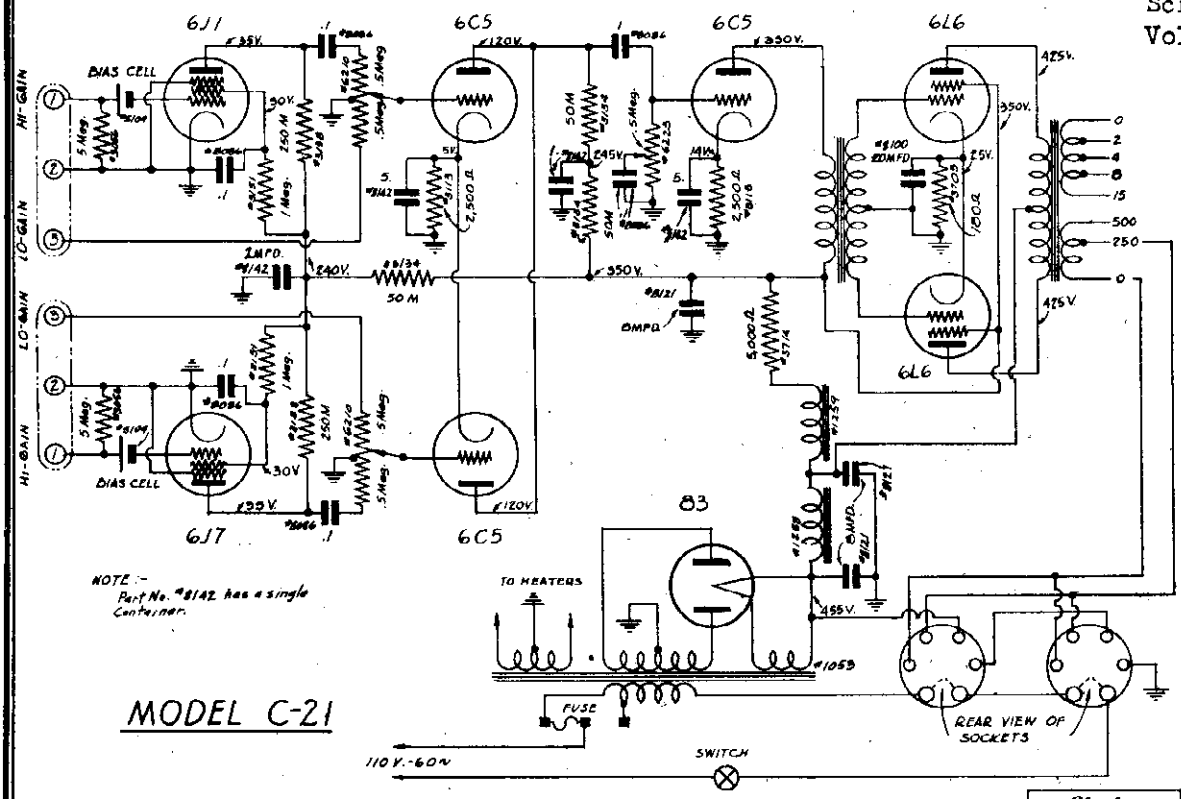

NOTE :-
Part No. "8142 has a single Container.

MODEL C-21

Clarion AMPLIFIER
AUGUST, 1936
PD
TRANSFORMER CORPORATION OF AMERICA, 69 WOOSTER STREET, NEW YORK, N. Y.

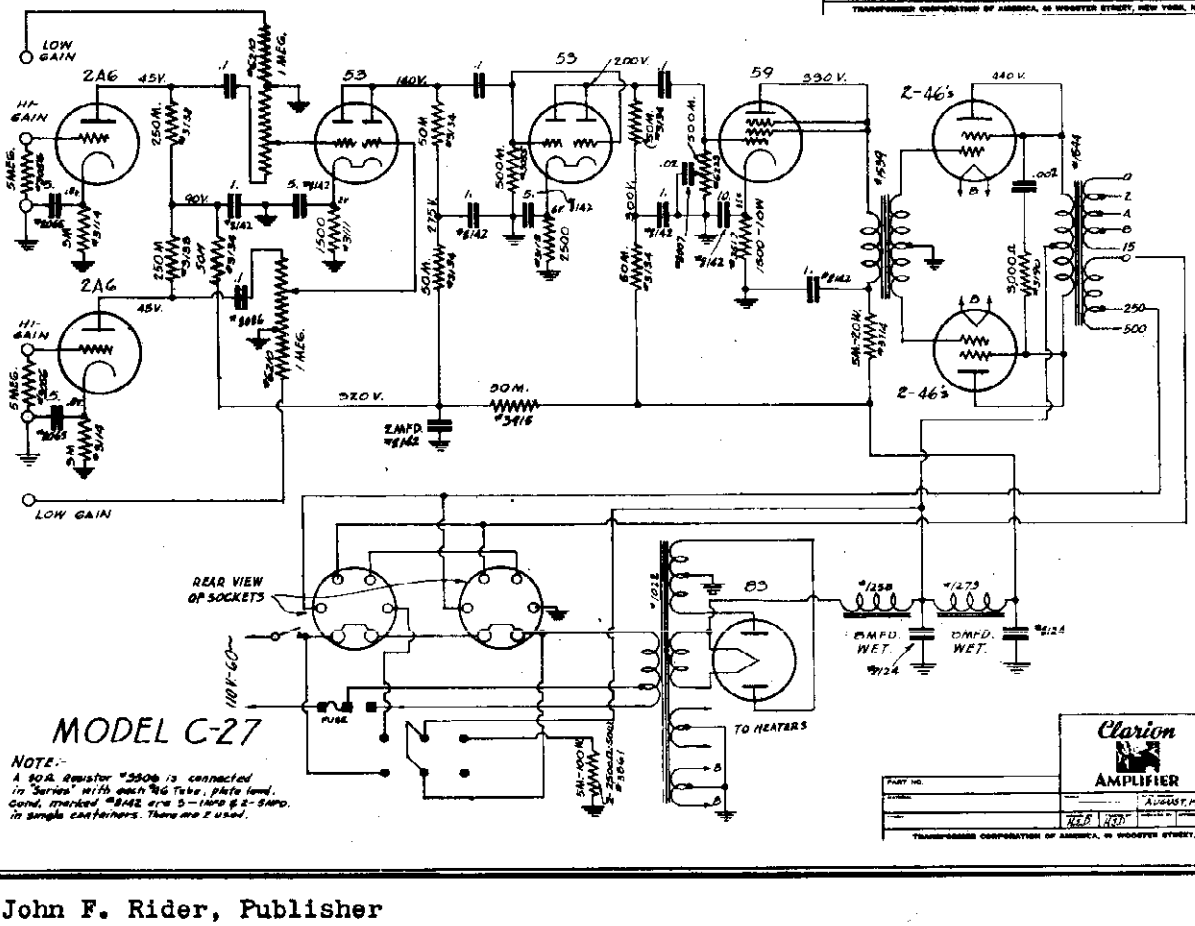

MODEL C-27

NOTE:-
A 50 A. resistor "3504 is connected in "Series" with each "6 Tube, plate feed. Cond. marked "8142 are 5-1mfd & 2-8mfd. in single containers. There are 2 used.

Clarion AMPLIFIER
AUGUST, 1936
PD
TRANSFORMER CORPORATION OF AMERICA, 69 WOOSTER STREET, NEW YORK, N. Y.

©John F. Rider, Publisher

MODEL C-33
Schematic
Voltage

TRANSFORMER CORP. OF AMER.

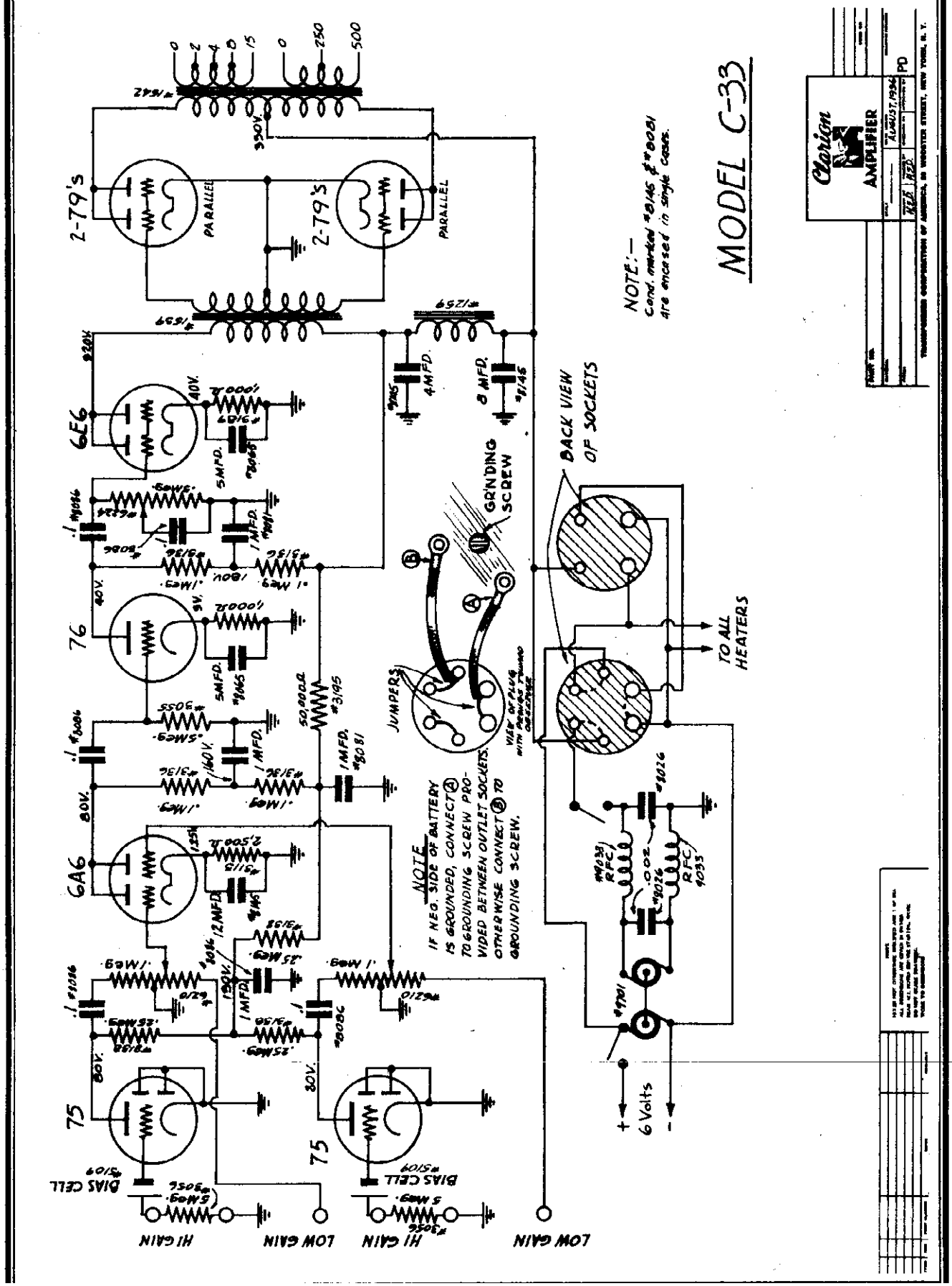

TRAV-LER RADIO & TELEV. CORP.

MODEL 512
MODEL 525, 6v. DC
Schematics

MODEL 512

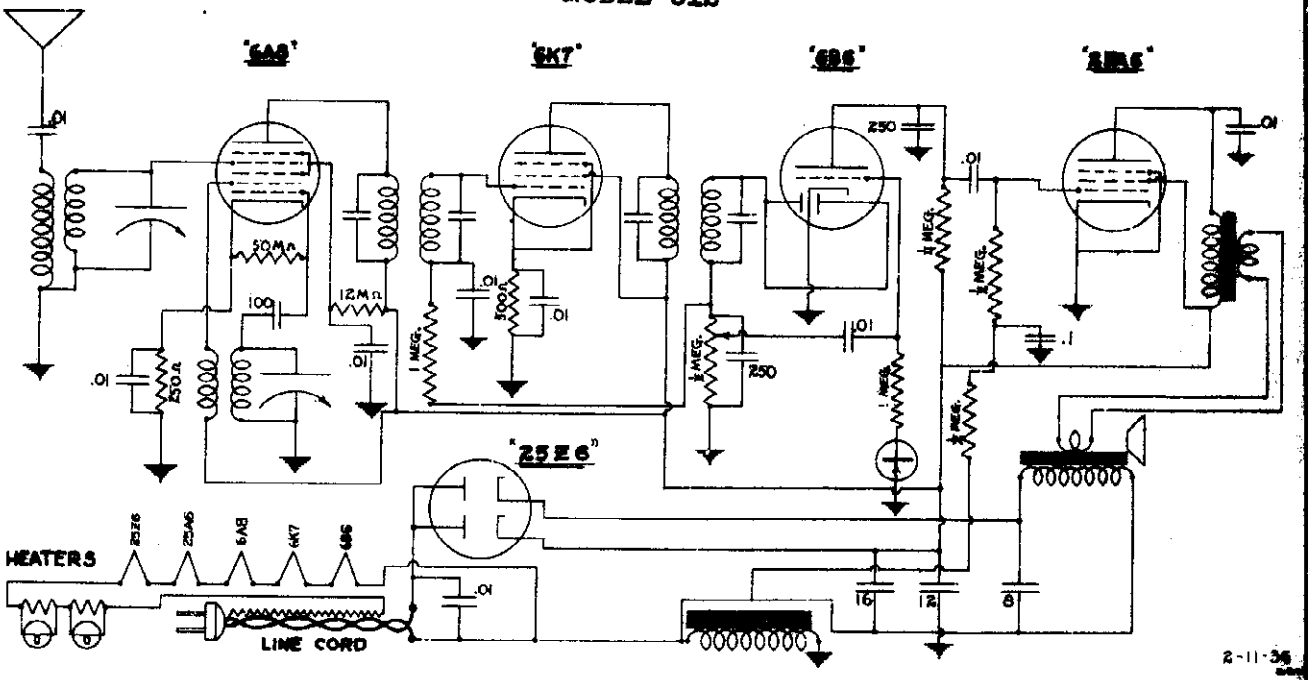

MODEL 525, 6v. DC.

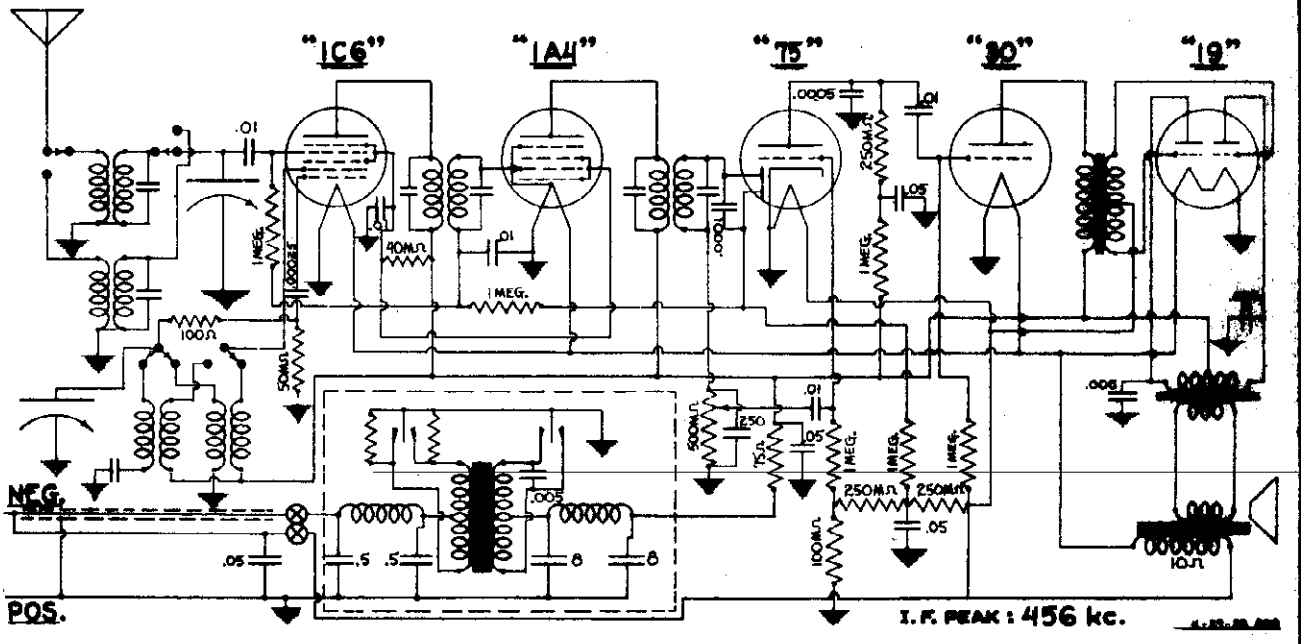

MODELS 173,733
MODEL 542
Schematics

TRAV-LER RADIO & TELEV. CORP.

MODEL 542

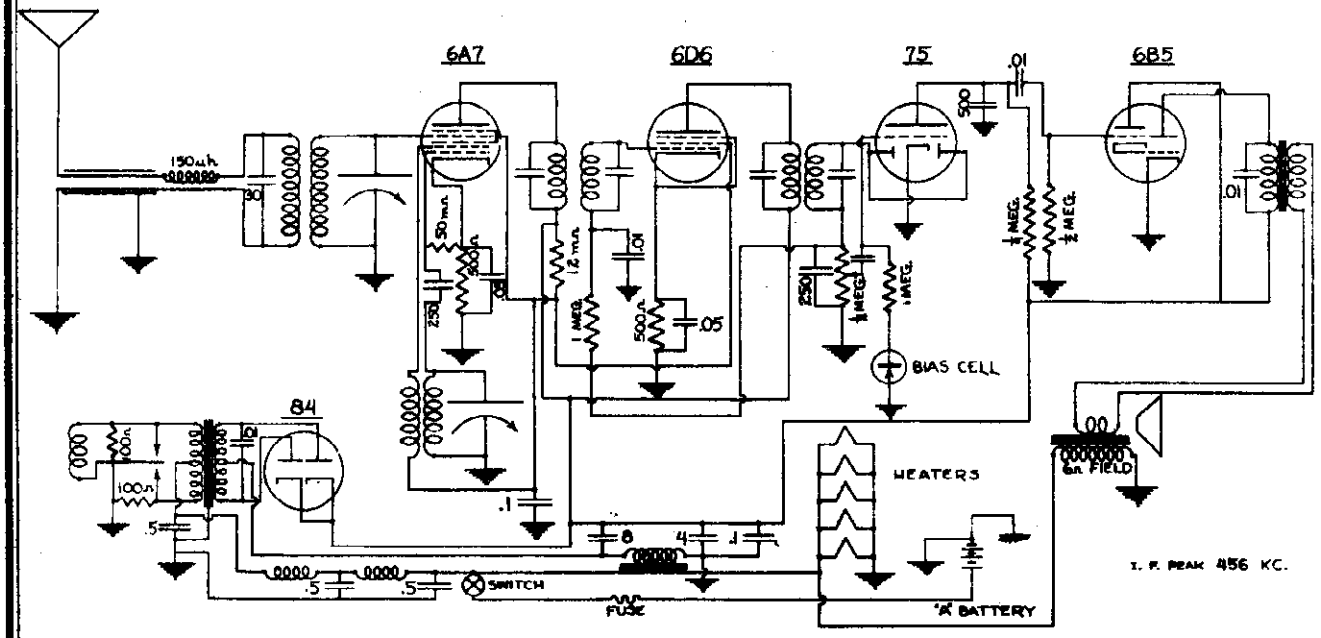

7 Tube - 6 V - D.C.Radio

MODELS 173, 733

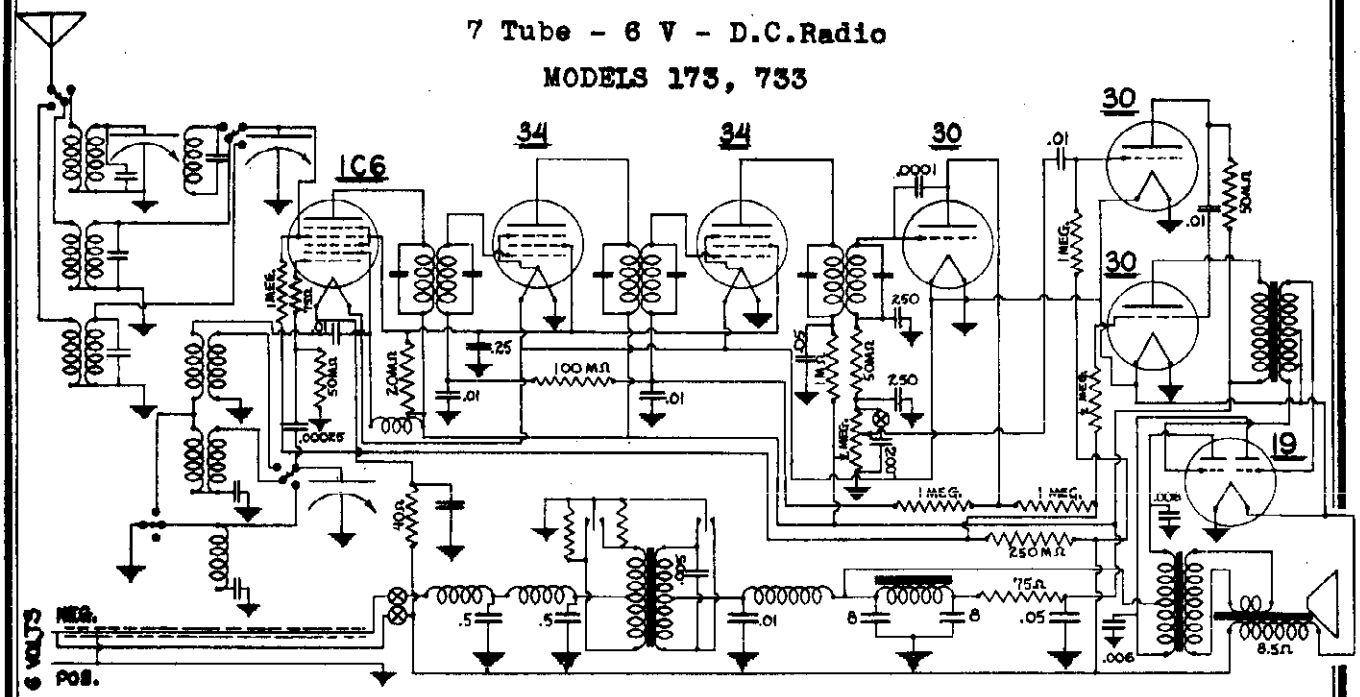

TRAV-LER RADIO & TELEV. CORP.

MODELS 622,623
MODELS 633,634,163
Schematics

MODELS 622, 623

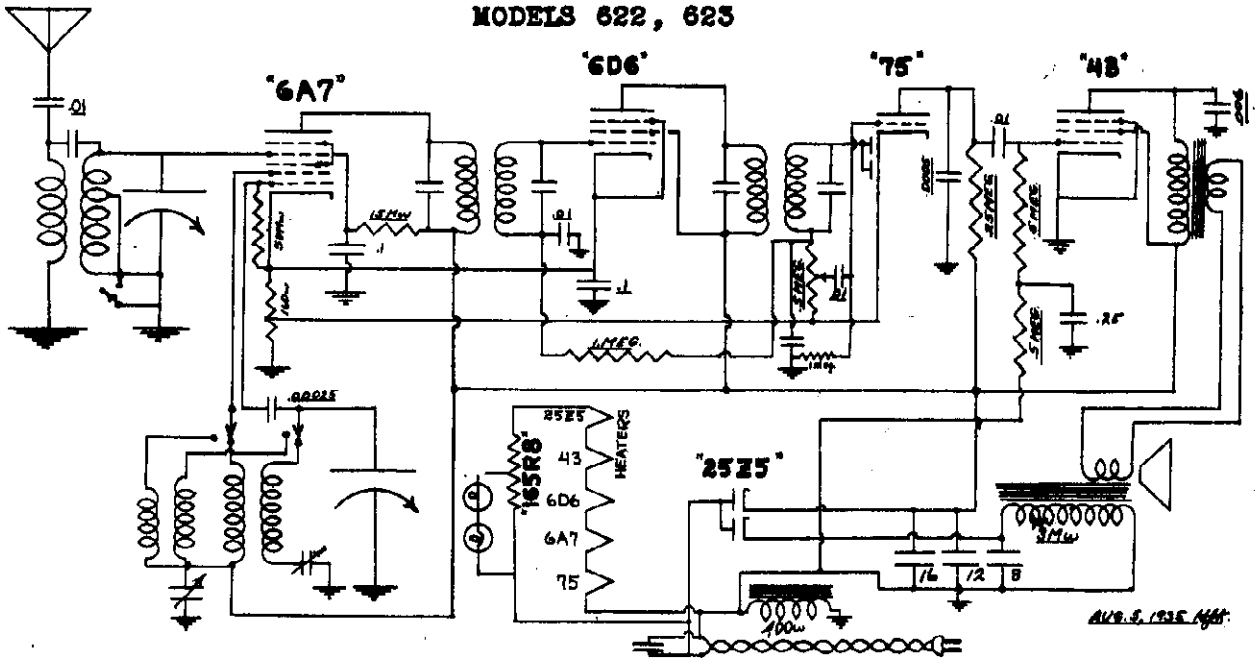

MODELS 633, 634, 163.

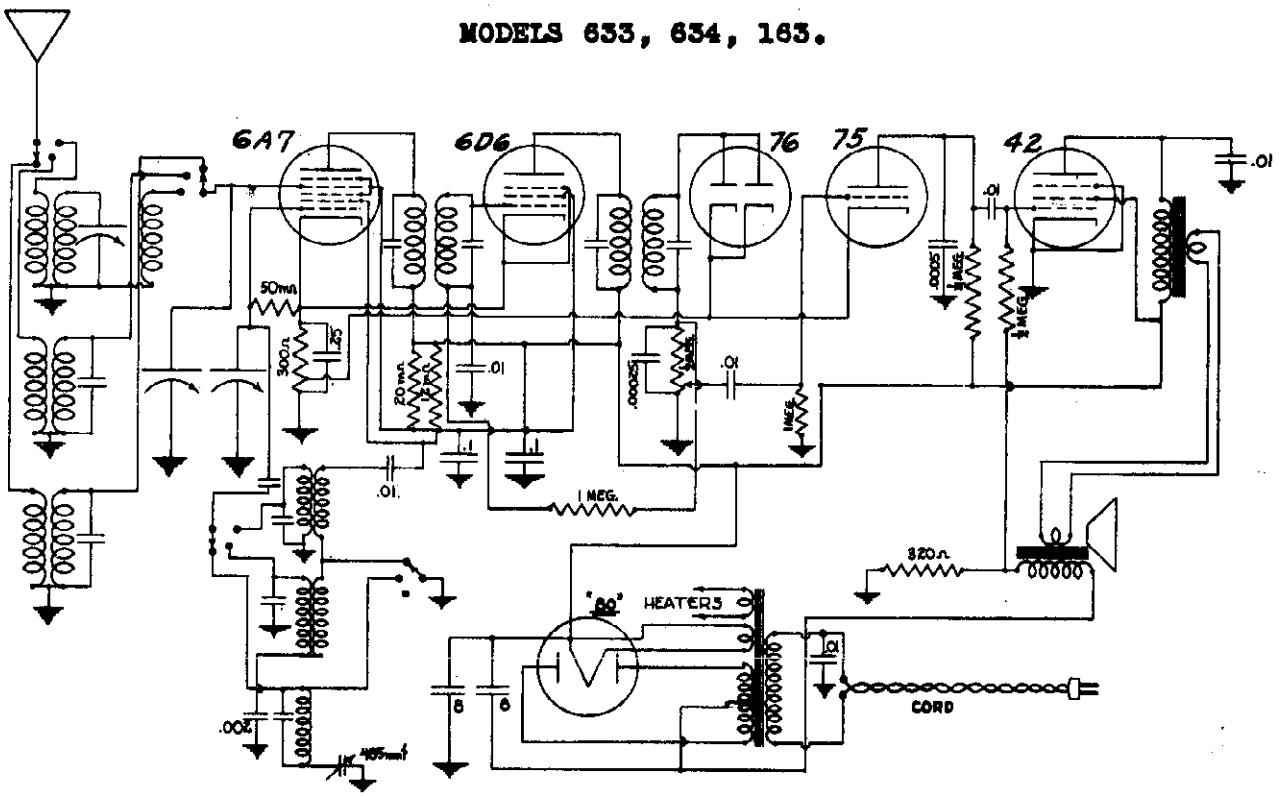

MODEL 642
Schematic
Notes

TRAV-LER RADIO & TELEV. CORP.

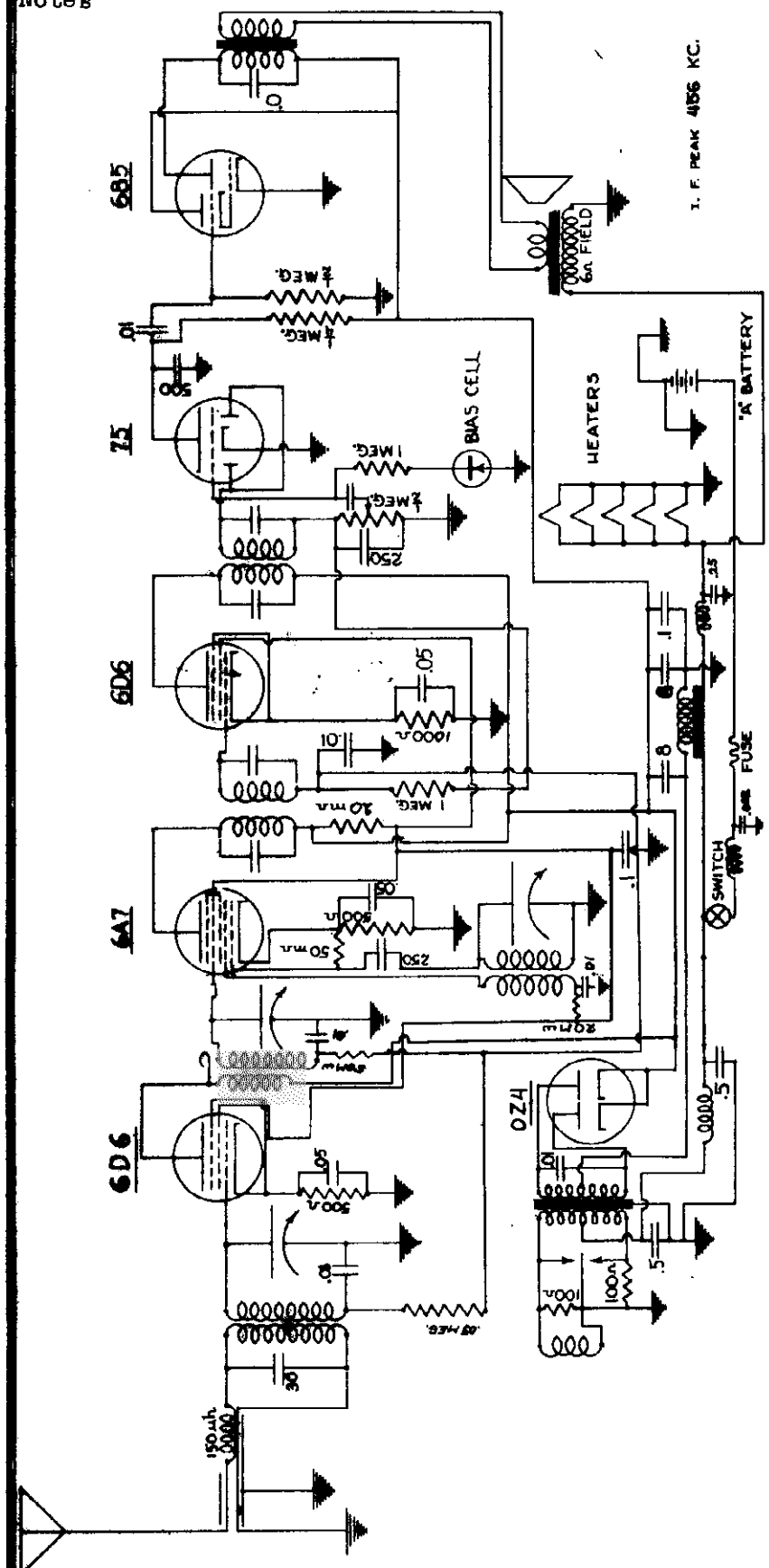

MODEL 642

ASSEMBLY AND MOUNTING:

The set is mounted by means of a 3/8 inch machine bolt placed through a hole in the center of a space to clear of x 7¼ inches, and having no obstruction within 7¼ inches from its surface which will then clear the auto chassis, and so located as to allow the insertion of the shafts without sharp bends. The rear of the set can then be joined to the head of this bolt, and the nut attached to the bolt and tightened against the opposite side of the partition, leaving the set in a rigid mounting.

The control unit is supplied with individual escutcheon plates to match your particular car. It is also possible to secure means for mounting the unit under the dash or on the steering column if the car is not equipped for dash mounting. Instructions for mounting the control unit in the dash of your car are enclosed with the proper escutcheon.

©John F. Rider, Publisher

Parts List

TRIANGLE ELECTRIC CO.

MODEL 6P
Imperial
Schematic

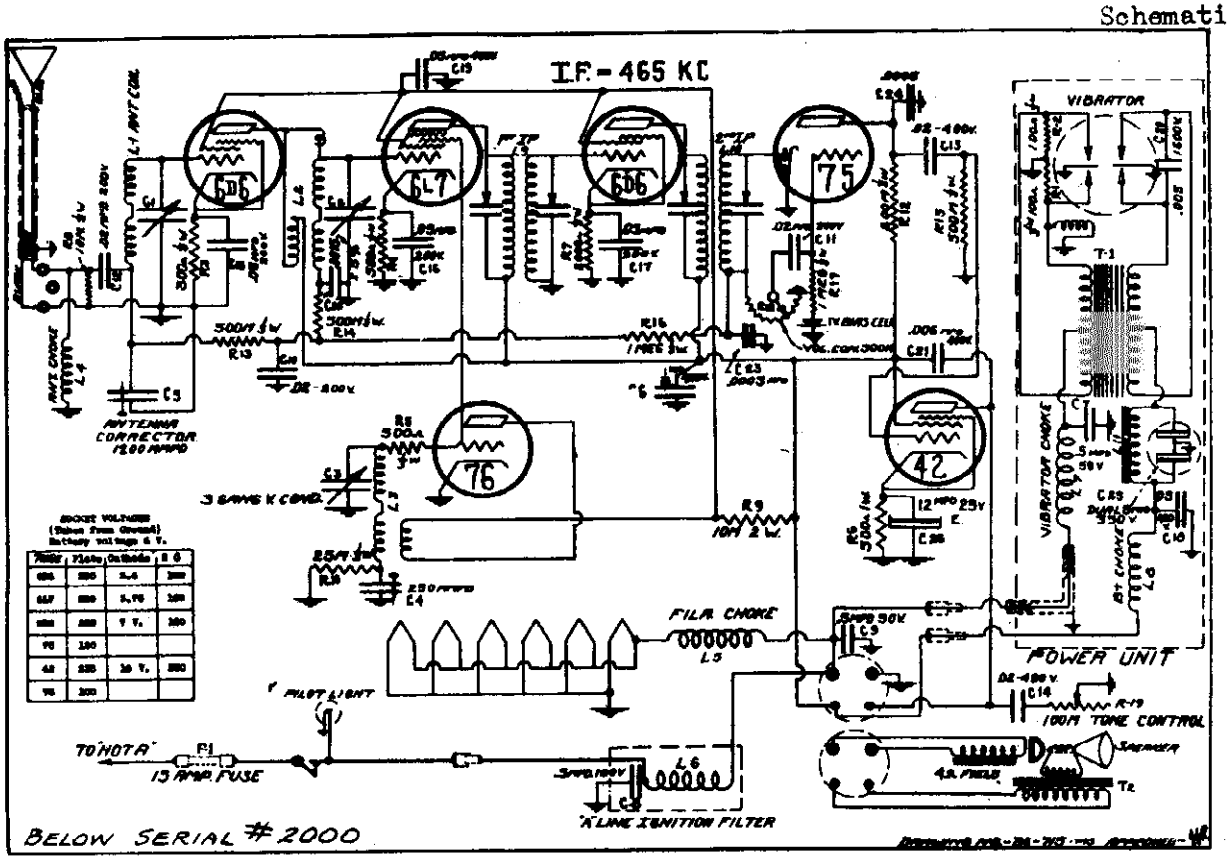

REPLACEMENT PARTS LIST

WHEN ORDERING, USE PART NO. AND DESCRIPTION SHOWN ON THIS LIST REGARDLESS OF NUMBER PRINTED ON PART ITSELF.

PRICES SUBJECT TO CHANGE WITHOUT NOTICE

Part No.	Schematic Location	Description	List Price
7801		Bias Cell - 1 Volt	.20
5600		Cable - Flexible drive with fittings	.55
5532		Cable - Antenna	.50
5530A		Cable - "A" Battery with fuse holder	.80
5533		Cable - Battery and B + lead (inside set)	.32
5531		Short "A" lead (extending from set)	.25
5554		Long "A" lead (extending from drive head)	.60
4302	L11	Choke - filter (power unit)	.92
8523	L1	Coil - Antenna, complete assembly	.85
8524	L2	Coil - Mixer, complete assembly	.85
8525	L3	Coil - Oscillator, complete assembly	.85
8526	L4	Coil - Antenna input choke	.85
8527	L5	Coil - Filament choke	.85
8528	L6	Coil - Ignition choke	.85
8529	L7	Coil - Vibrator primary choke	.85
8530	L8	Coil - B + Choke	.85
8531	L9	Coil - 1st. I.F. Assembly	1.30
8532	L10	Coil - 2nd. I.F. Assembly	1.30
8181	C1 C2 C3	Condenser - variable tuning	3.50
8223	C4	Condenser - Padding 2 stud mounting	.38
8224	C5	Condenser - Padding, single mounting	.38
	C6	Condenser - .1 Mfd - 400 volt	.20
	C7	Condenser - .5 Mfd - 50 volt (power unit)	.40
	C8	Condenser - .5 Mfd - 120 volt	.40
	C9	Condenser - .5 Mfd - 50 volt	.36
	C10 C11 C12	Condenser - .02 Mfd - 200 volt	.18
	C13 C14	Condenser - .02 Mfd - 400 volt	.20
	C15 C16 C17	Condenser - .05 Mfd - 200 volt	.16
	C18 C19	Condenser - .05 Mfd - 400 volt	.20
	C20	Condenser - .006 Mfd - 1600 volt	.36
	C21	Condenser - .006 Mfd - 400 volt	.20
	C22	Condenser - .0015 Mica	.16
	C23	Condenser - .0003 Mica	.16
	C24	Condenser - .0005 Mica	.18
8825	C25	Condenser - Dual 8 Mfd. - 350 volt	1.80
8825	C26	Condenser - 12 Mfd. - 25 volt	.60
		Condenser - .8 Mfd. - 200 volt (can Type for Generator)	.40
6226	R18	Control - volume	.90
6225	R19	Control - tone	.75
4866		Coupling - insacup on vari. cond.	.18
6103		Coupling - male for wire leads	.20
6102		Coupling - female for wire leads	.20
		Dial Card - calibrated	.28
5717		Dial Plate	1.15
3415	F1	Fuse - 15 ampere	.30
7904		Fuse - insulating tube	.04
450		Grid cap - large	.04
6012		Grid cap - metal tube	.04
7809		Grommet - Large rubber - 1/2" ID	.04
7109		Knob - volume control & switch	.60
7110		Knob - large control	.60
4106		Lamp - 6 volt pilot - bayonet type	.12
6480		Mounting Studs for Mtg. plate	.18
9006		Nuts for above	.12
768		Nut - thumb, round, knurled (power unit)	.04
6681		#8 P.K. Screw - hex head 1/4" long	.04
742		#8 P.K. Screw - hex head 3/8" long	.04
662		#6 P.K. Screw - hex head 1/4" long	.04
855		8-32 Headless set screw 1/8" long (couplings)	.04
8419		Cover Screw (Power Unit)	.18
4066		Cable anchor bushing (var. condenser)	.08
4069		Cable anchor bushing (volume control)	.08
680		#8 Washer 1/2" OD	.04
6481		Wing screw - 5/16 - 18 x 3/8" long	.06
7064		Wing screw Washer	.06
	R1 R2	Resistor - 100 ohm 1/3 Watt - Moulded bakelite	.18
	R3	Resistor - 300 ohm 1/3 Watt - Moulded bakelite	.18
	R4 R5	Resistor - 500 ohm 1/3 Watt - Moulded bakelite	.18
3865	R6	Resistor - 500 ohm 1/2 Watt - Wirewound	.15
	R7	Resistor - 2000 ohm 1/3 Watt - Moulded bakelite	.12
	R8	Resistor - 10M ohm 1/3 Watt - Moulded bakelite	.12
	R9	Resistor - 10M ohm 1 Watt - Moulded bakelite	.18
	R10	Resistor - 25M ohm 1/3 Watt - Moulded bakelite	.18
	R11	Resistor - 200M ohm 1/3 Watt - Moulded bakelite	.12
	R12 R14 R15	Resistor - 500M ohm 1/3 Watt - Moulded bakelite	.12
	R16 R17	Resistor - 1 megohm 1/3 Watt - Moulded bakelite	.12
		Resistor - 15M ohm (Distributor suppressor)	.25
4188		Remote control head (for under-dash mounting)	6.50
4018		Worm drive - replacement unit (var. cond.)	1.40
2746		Socket - 6 prong	.14
8008		Socket - 8 prong	.16
2745		Socket - 5 prong	.14
2744A		Socket - 4 prong - phenolic	.25
8006		Socket - 3 prong - antenna	.06
8014		Socket - vibrator	.12
8617		Speaker - 6 inch.	4.50
4321	T2	Speaker transformer - Specify if Jensen or Rola	1.80
4302	T1	Transformer - power	2.50
6231		Tube Shield assembly	.25
6632		Tube Shield ground clip	.18
9800		Vibrator - (synchronous)	3.30
5960		Main Mounting Plate	2.60

©John F. Rider, Publisher

MODEL 6P
Imperial
Alignment
Socket, Trimmers

TRIANGLE ELECTRIC CO.

ALIGNMENT PROCEDURE

PRELIMINARY

Output Meter Connections (Copper Oxide Type Meter) . . Across voice coil
Output Meter reading to indicate 1 Watt output . . . . . 1.75 Volts
Average sensitivity in microvolts for 1 Watt output . . See chart below

Generator ground lead connection . . . . . Receiver Chassis
Dummy antenna value in series with generator output lead See chart below
Connection of generator output lead . . . . . See chart below

Position of volume control . . . . . Full on
Position of tone control . . . . . OFF (or treble position)
Position of dial card at Maximum Capacity . . . . . Max. Setting line

BAND NAME	POSITION OF DIAL POINTER	GENERATOR FREQUENCY	DUMMY ANTENNA	GENERATOR CONNECTION	ADJUST (In order given)	MICRO-VOLTS
I.F.Stages	640 KC	465 KC	.1 Mfd.	Frame Grid	C31 C32 C33 C34	1000
Regular	1400 KC	1400 KC	.0002	Ant. Lead	C35 C36 C37	2
Regular	600 KC	600 KC	.0002	Ant. Lead	C4 C5	2

IMPORTANT ALIGNMENT NOTES

1. After adjusting the C4 oscillator padding condenser at 600 KC rotate dial back to 1400 KC and recheck the settings made on C36, C36, C37.

2. It will not be necessary to bend the plates of the variable condenser for alignment on other points on the dial.

3. It should be noted that after the receiver is installed in a car that it is not necessary, when preparing to align the set, to remove the control head and cables from the dash. There is a dial card on the variable condenser that will indicate the alignment frequencies and settings.

GENERAL INFORMATION

To examine this receiver for any reason first remove the two screws holding the cover. The speaker which is mounted on this cover will be removed at the same time allowing further inspection of the tubes and radio. The radio, being designed in two parts, having a pair of wire connectors from the chassis itself to the self contained power unit, can be removed from the case by first taking out the power unit.

The power unit has been very carefully designed to avoid any vibrator "Hash" from being picked up. Due to the exceptional sensitivity of the radio this interference must be kept at a minimum and it is advisable that the cover on the power unit be making good contact to the box. Tighten the cover by bending the flanges inward slightly. Also be sure that the .006 Mfd. 1600 Volt condenser across the vibrator is not open.

It is important that the chassis and power unit make contact to the inside of the receiver case. In addition it is advisable that the paint be removed from under the various bolt heads on the outside of the case that are holding power unit.

Harmonics of the I.F. may be noticed when the chassis is being serviced outside its case. This is a normal condition and will not be present when the set is in actual use.

NOTES ON THE ELIMINATION OF UNUSUAL NOISE CONDITIONS OCCURRING IN THE INSTALLATION IN CERTAIN CARS ARE GIVEN IN SECTION IX OF THE INSTRUCTIONS THAT WERE SENT WITH THE RECEIVER.

Car interference can be fed into the receiver through the flexible control cables, and it is suggested that these cables be bonded. Also see page 6 to this instruction book regarding the use of a shield bracket mounted over the tuning shaft coupling on the set.

In some types of installations (Usually inverted mountings) some receivers may experience extreme loss of sensitivity. If the 2nd I.F. transformer (#6532 as shown on can) does not respond to alignment, it should be replaced with a new type. This condition in the I.F. transformer is caused by the position of the iron core being affected by heat generated within the chassis, and is usually indicated by the softening of the wax within the transformer. The new type I.F. transformer (Part #6542) eliminates this difficulty.

WHEN REPLACING THE 2ND. I.F. UNIT FOR THE REASON AS DESCRIBED ABOVE, IT IS OF COURSE NECESSARY TO READJUST THE TRIMMERS TO 465 KC. WHEN MAKING THE ADJUSTMENT ON THIS UNIT AND LIKEWISE WHEN RE-TRIMMING THE 1ST. I.F. STAGE BE SURE NOT TO PULL THE PLATES TOGETHER TOO TIGHT AS THIS MAY BEND THE PLATES PERMANENTLY OUT OF SHAPE AND THEY WILL NOT SPRING BACK WHEN THE SCREW IS TURNED IN THE OTHER DIRECTION. IN THIS EVENT PEAKING OF THE TRIMMERS WOULD NOT BE OBTAINED AND THE UNIT WOULD HAVE TO BE REPLACED.

ADDITION OF NEW SPECIAL TUNING CABLE SHIELD (5132) TO ELIMINATE EXCESSIVE IGNITION INTERFERENCE. IN MODEL HA6 SERIES 1.

In Ford 1936 V-8 and other automobiles where an excessive amount of ignition noise is present, the bracket described should be used in conjunction with a new type of shield (No. 5132). Both the bracket described and the new type shield described here are necessary for best noise elimination. The bracket and shield need not be ordered for models number above 5000 (series 2).

The new tuning cable shield (5132) will be supplied "No Charge" together with a screw used to fasten it over the tuning cable opening.

SERVICE FIRST AID
EVERY GOOD SERVICEMAN CHECKS TUBES AND THE ANTENNA SYSTEM FIRST.

DEFECT	GENERALLY CAUSED BY	REMEDY
QUALITY POOR	After Checking Voltage, Tubes and Vibrator; Check .08 Condenser in the plate circuit of the 75 tube which may be open	Change if necessary
	Speaker Cone off center	Adjust or change speaker
DEAD RECEIVER	Blown Fuse, Defective Off-On Switch, Open Voice Coil or Speaker Transformer	Check
	Defective Vibrator, Blown Condenser, Open Coil Winding	Check "B" Voltage
POOR SENSITIVITY	Poor Antenna System, Receiver not aligned, Speaker Field Coil shorted	Check
	Bad I.F. Transformer (Early Sets) due to the wax in the transformer coil and the shifting of the iron core coupling	Change to new type I.F. (7 SC48 on can)
RADIO INTERFERENCE OR HOWL	Possible open .006 in plate circuit of 12	Change if necessary
	Variable Condenser not insulating freely in its rubber mountings	Free Condenser
RADIO FREQUENCY OSCILLATION	Open 08 Bypass Condenser .1 Mfd. 400 volt in B + Circuit	Change
	The grid lead between the filter for the 6L7 and the variable condenser may be too close to the metal frame of the variable condenser (Top section)	Push lead away
OFF CALIBRATION	Set not properly aligned	Check
	Dial hand not set to maximum line when condenser is at full capacity	Reset screw on back of drive head
SET NOT SELECTIVE	Check Alignment, especially the I.F. stages.	
SLIPPING OF THE VOLUME CONTROL SHAFT	Cable may not be meshed with slot in control shaft due to cable not going far enough in the coupling, or volume control bracket may be bending back at an angle which does not allow the control to meet the shaft slot.	Correct as described

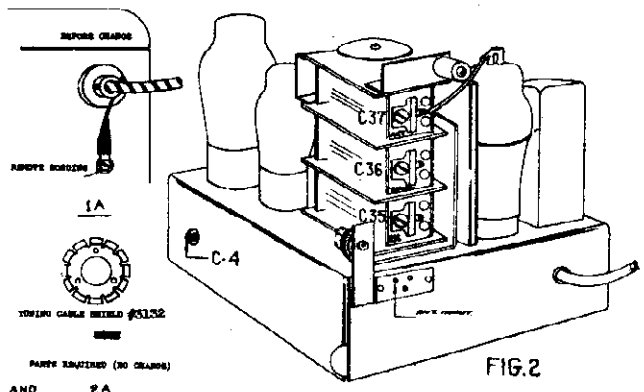

FIG.2

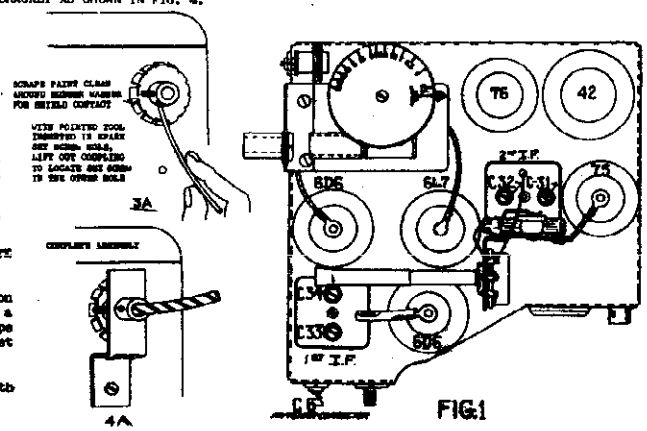

FIG.1

©John F. Rider, Publisher

TRIPLETT ELECTRICAL INSTRUMENT CO.

MODEL 1231 Sign.Gen.
MODELS 1166A, 1220A
Schematics

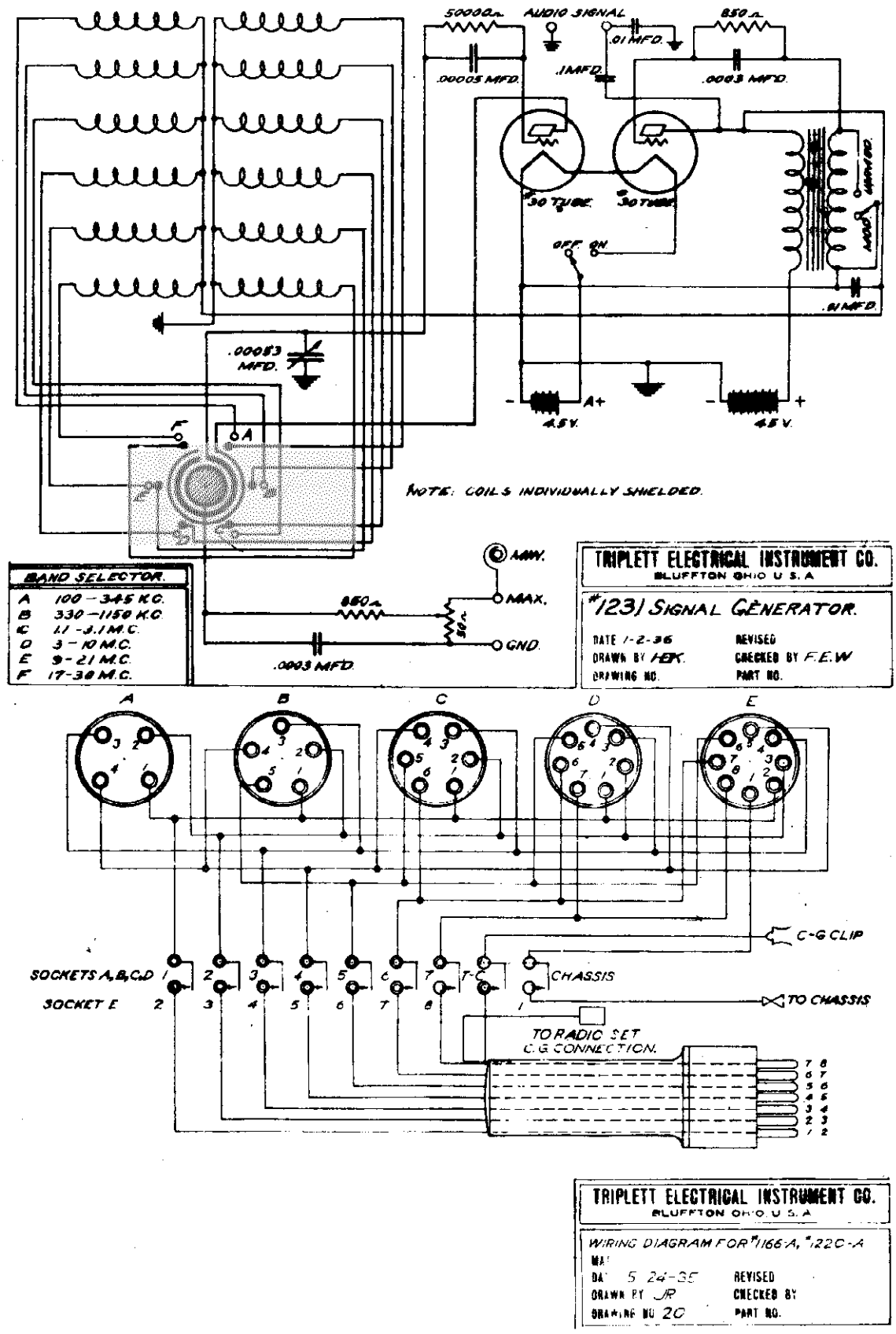

©John F. Rider, Publisher

MODEL 1210A Tube Tester
Schematic

TRIPLETT ELECTRICAL INSTRUMENT CO.

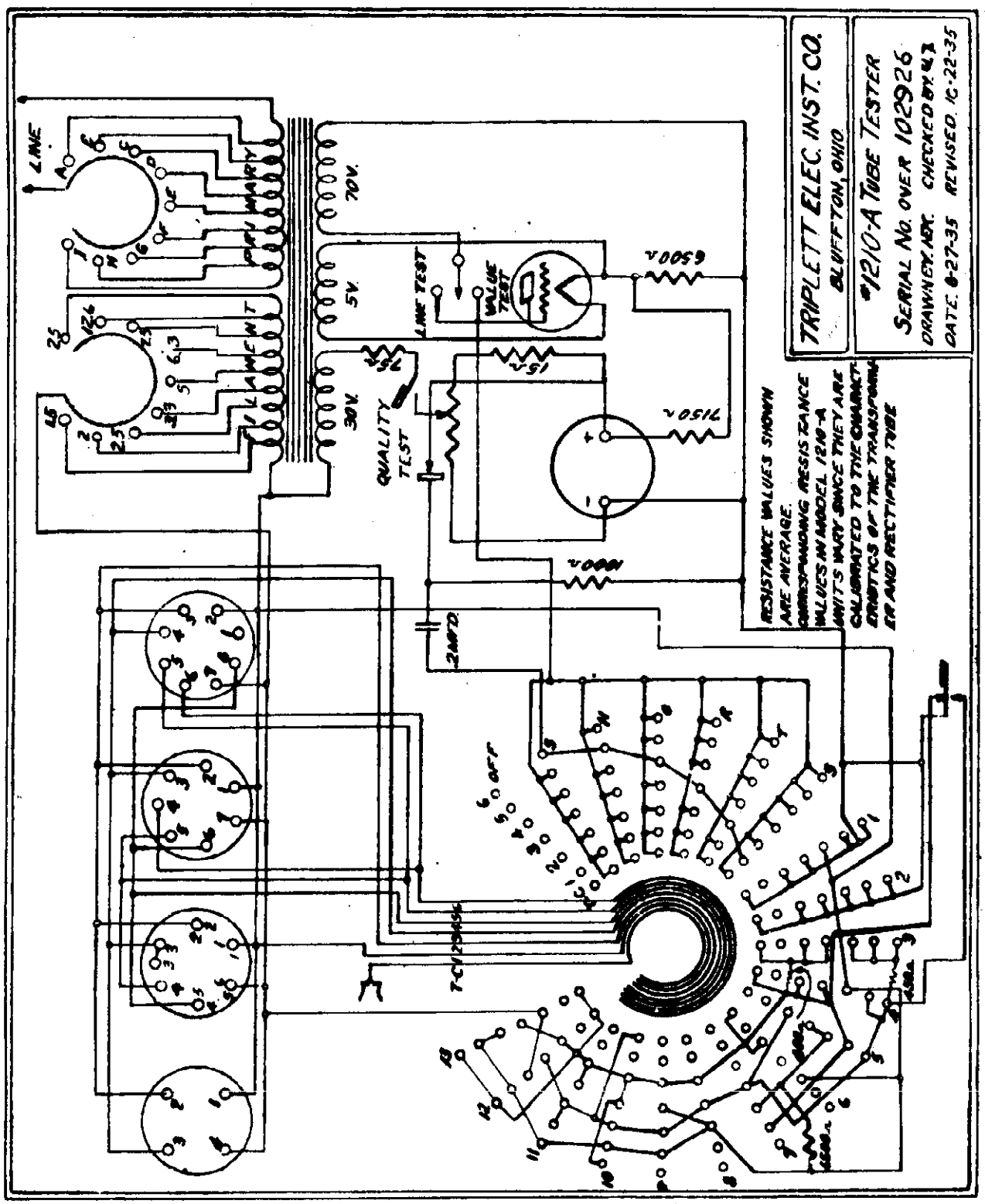

©John F. Rider, Publisher

TRIPLETT ELECTRICAL INSTRUMENT CO.

MODEL 1502 Tester
Schematic

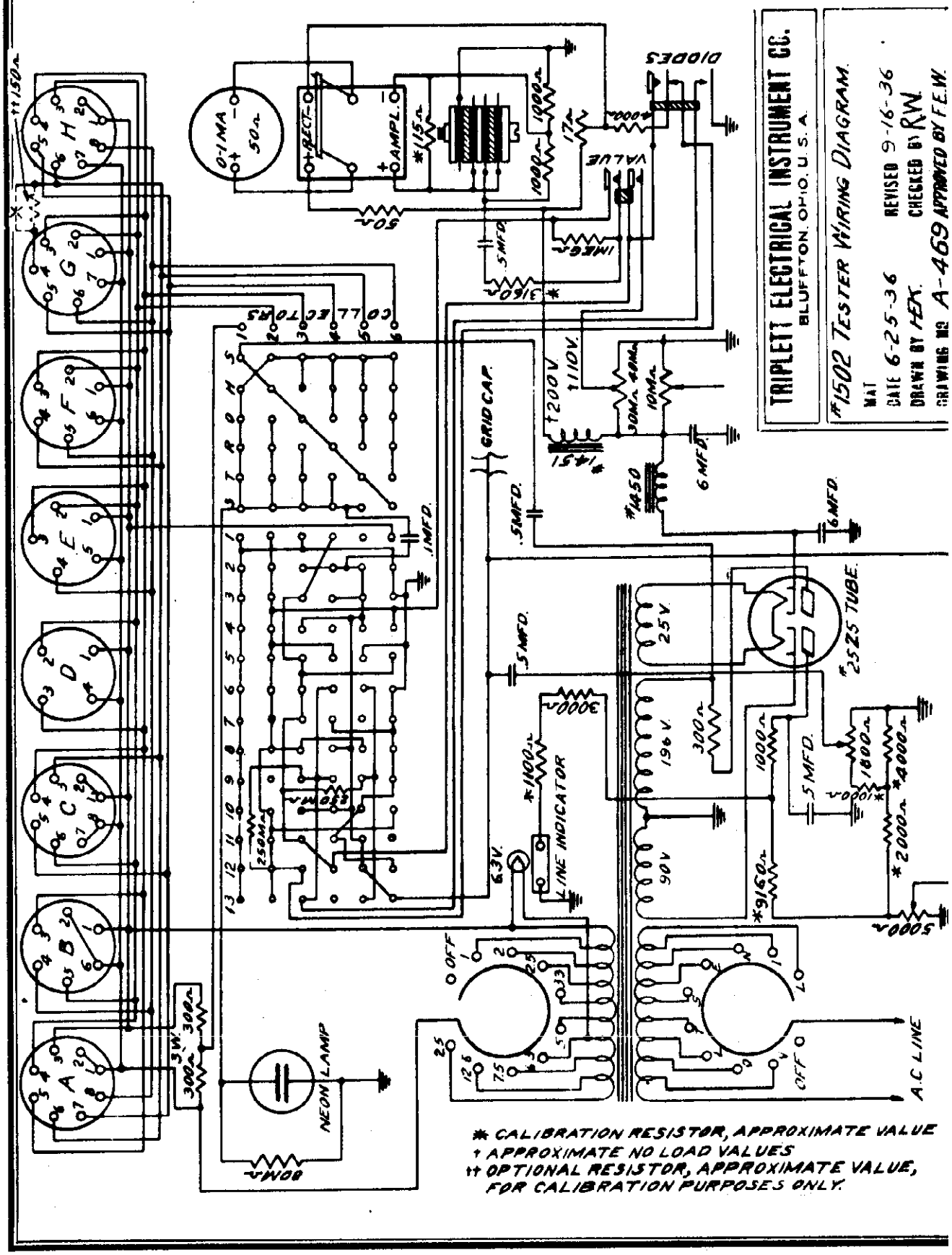

MODEL 1503 Tester

Schematic

TRIPLETT ELECTRICAL INSTRUMENT CO.

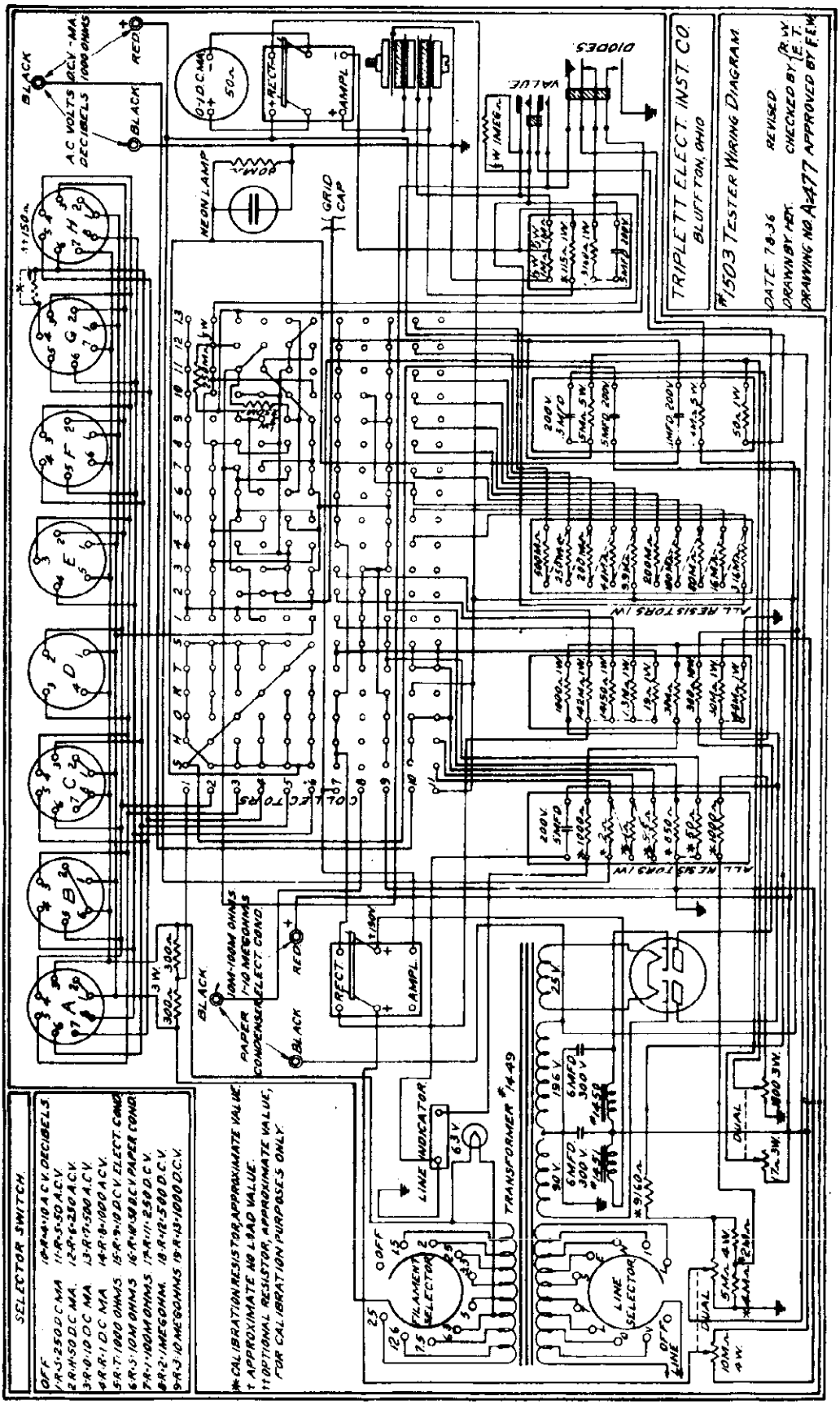

©John F. Rider, Publisher

MODEL 2A3 Amplifier
MODEL 2A5 Amplifier
Schematics

TROY RADIO MFG. CO.

POWER AMPLIFIERS

(Phase Inverted)

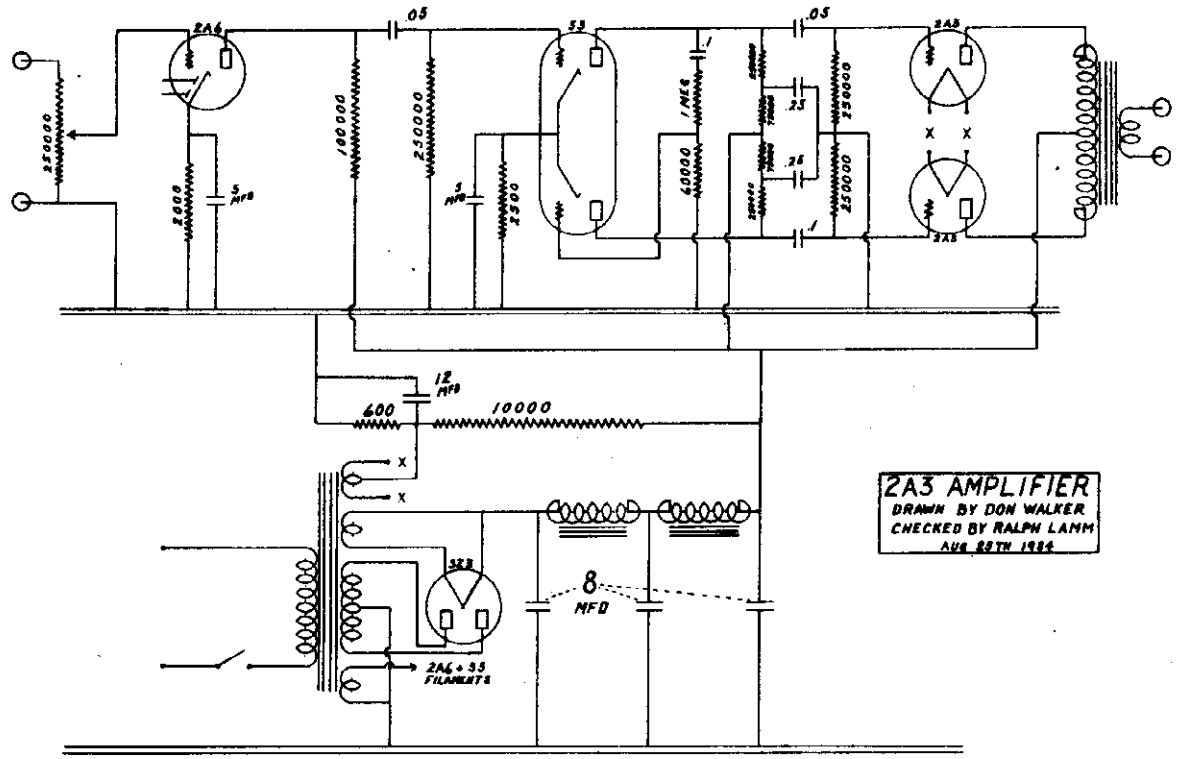

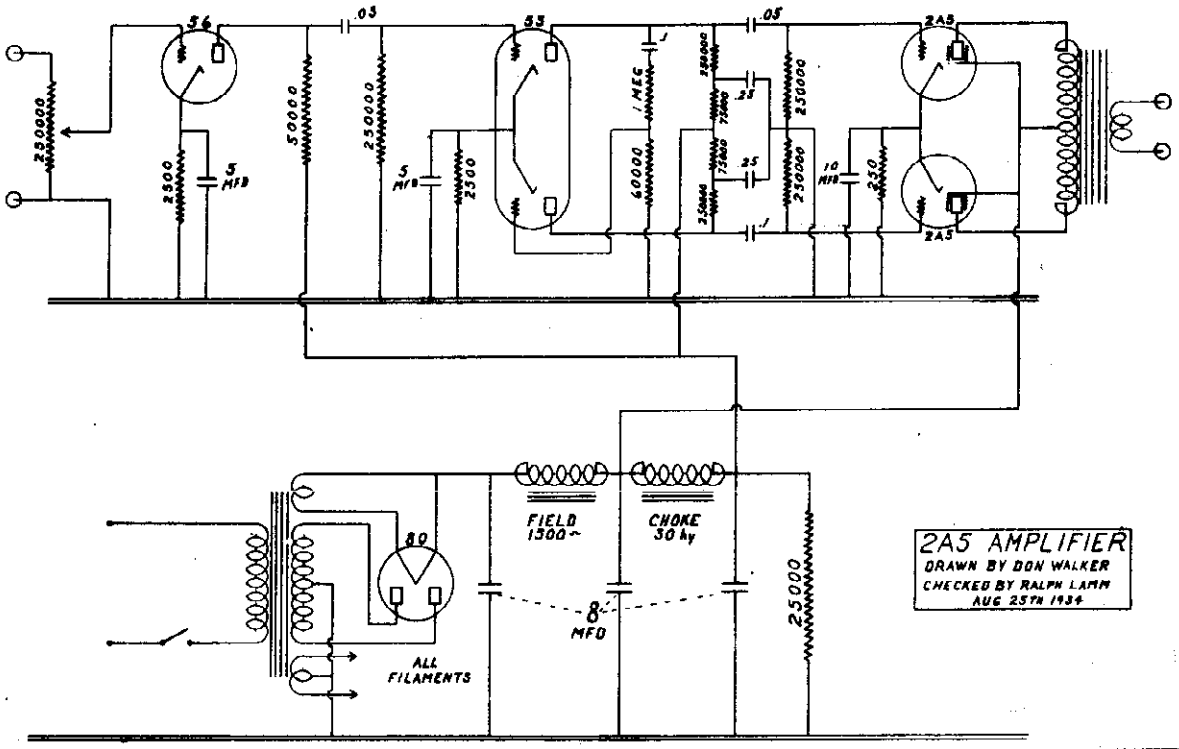

MODELS TR4,TR4CH
MODEL TR68 Auto
MODELS 75,75C,175 AC-DC
Schematics,Socket

TROY RADIO MFG. CO.

TROY #175 AC-DC

in Cabinets #75 & #75C

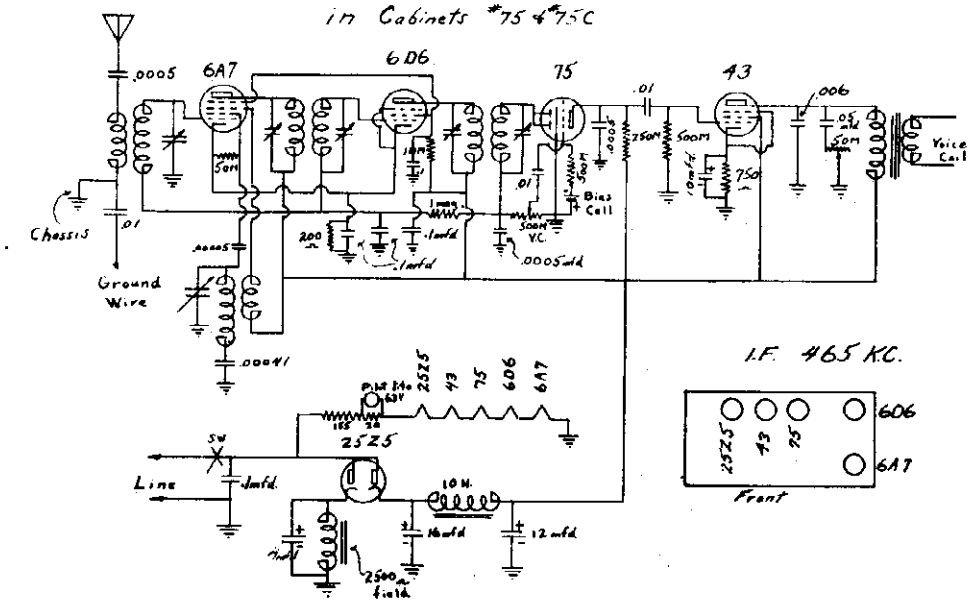

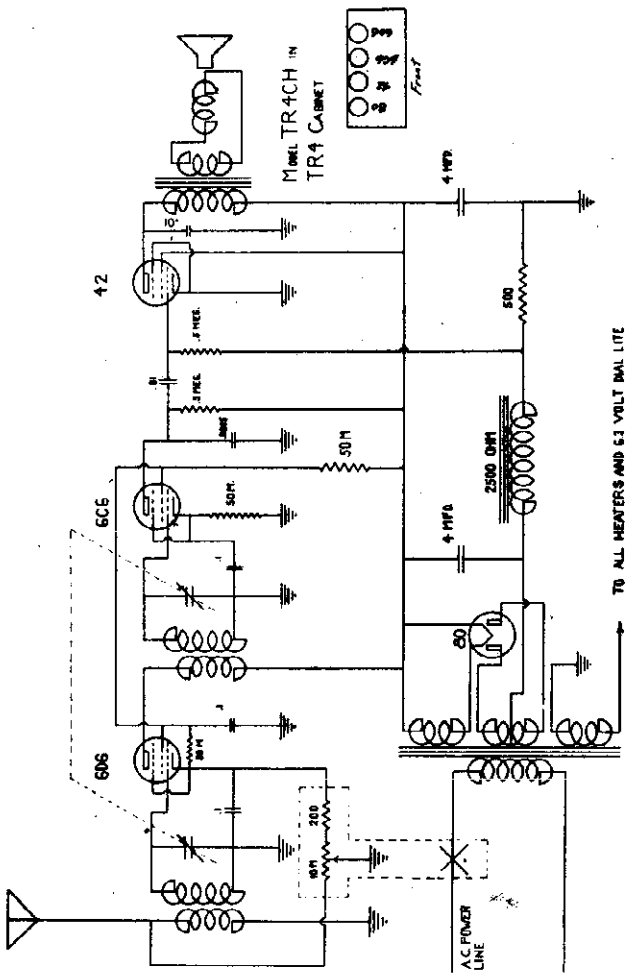

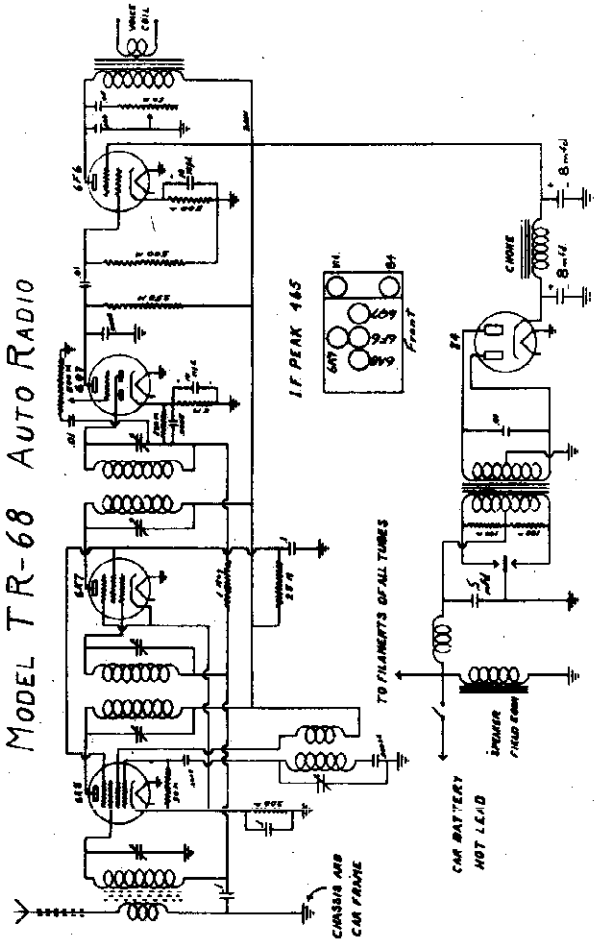

©John F. Rider, Publisher

TROY RADIO MFG. CO.

MODEL 51B5
MODEL 75,75B,75C Batt.
MODELS 77,77C
Schematics, Socket

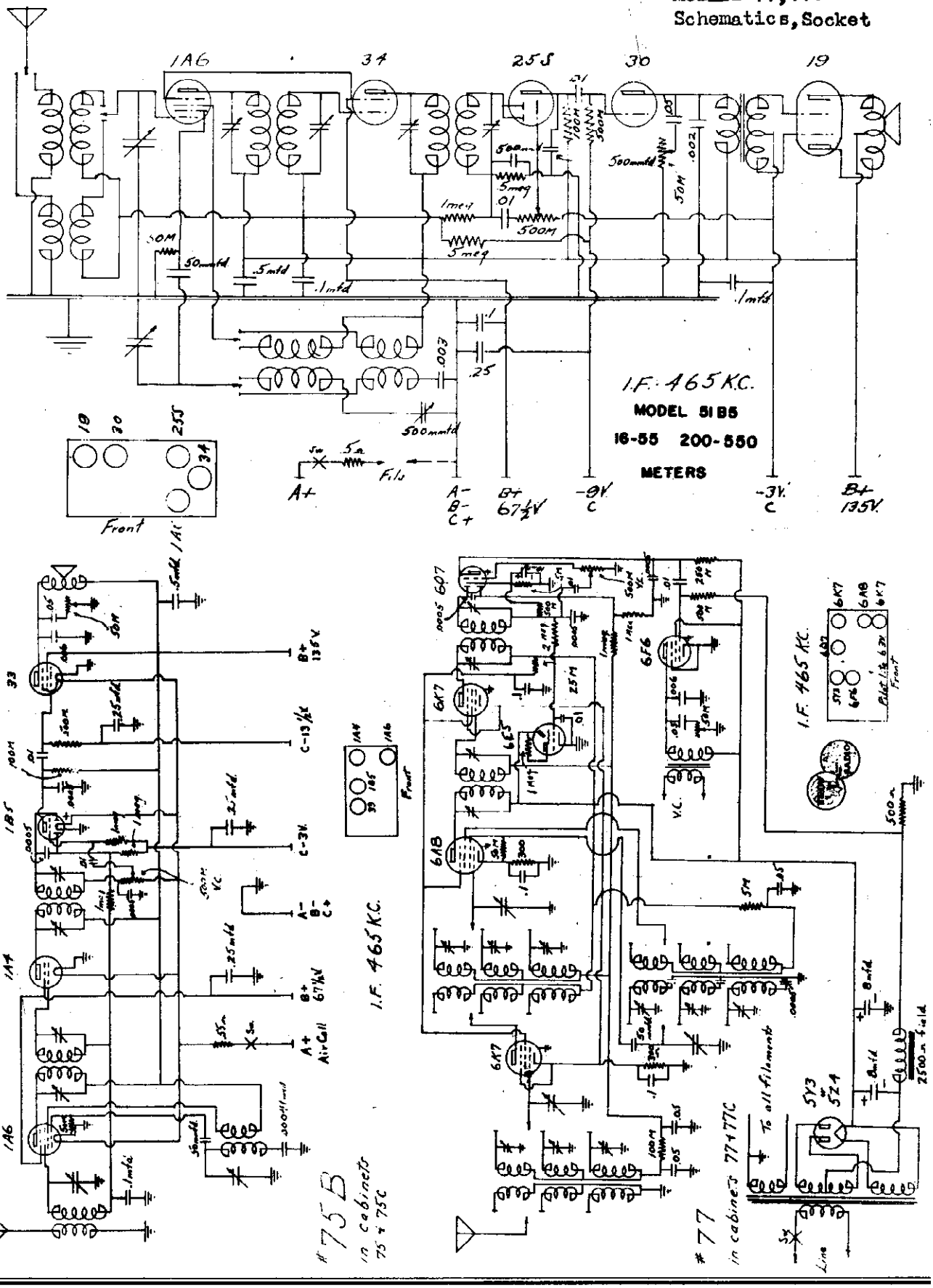

MODELS TR53,TR53C,TR53CH
MODELS 75,75C,75CH,75PH AC **TROY RADIO MFG. CO.** Schematics, Socket
MODELS TR153,153C AC-DC

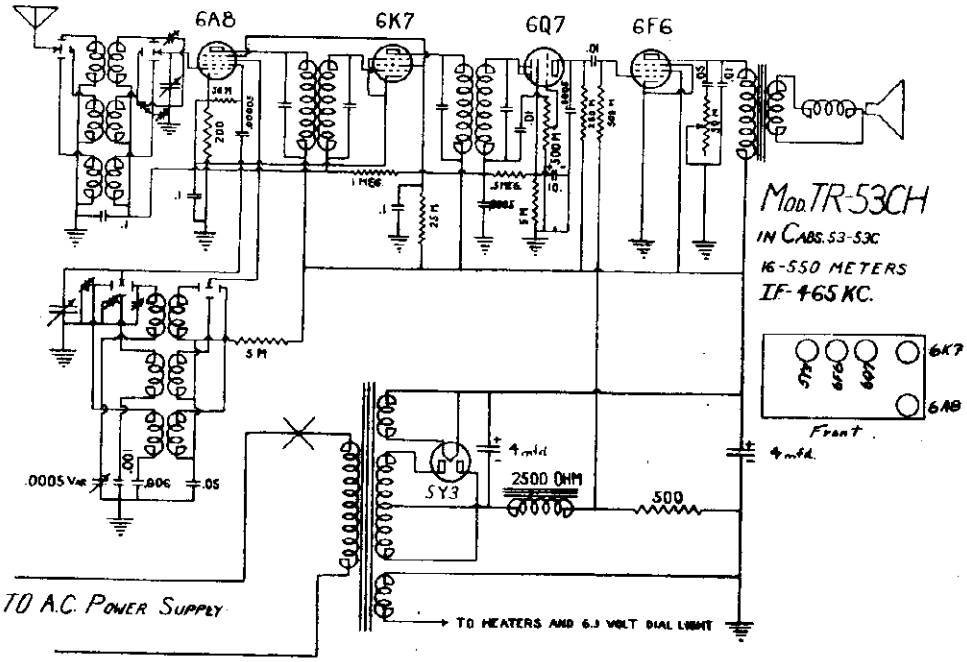

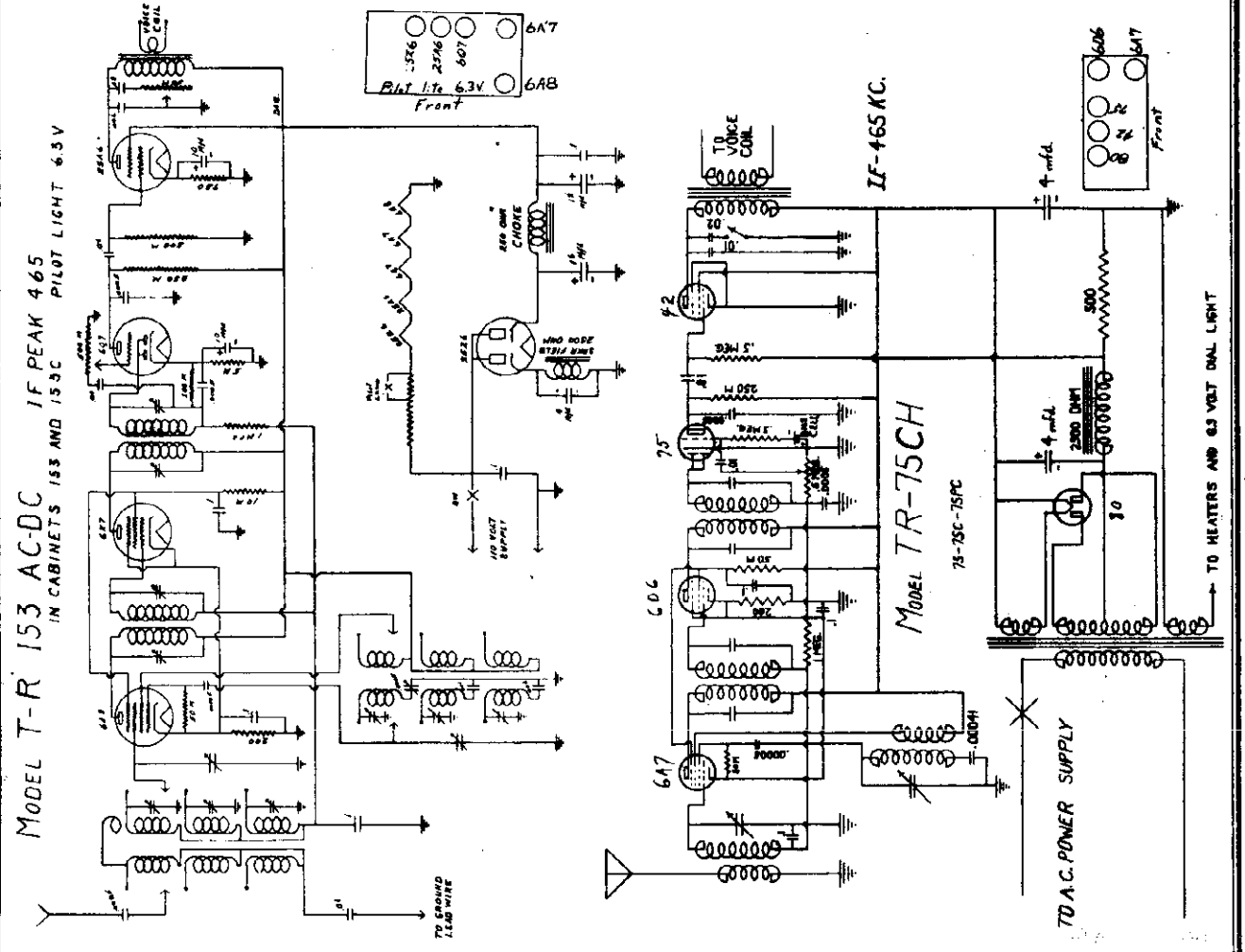

©John F. Rider, Publisher

UNITED AMERICAN BOSCH CORP.

MODELS 242, 243
MODELS 250, 251
Socket Alignment

GENERAL DESCRIPTION

The Model 242 is an eight-tube superheterodyne receiver whose circuits comprise a first detector, an oscillator, two stages of intermediate frequency amplification, a combined second detector--automatic volume control, a stage of audio frequency amplification, an output stage and a rectifier.

This model is designed to operate over the standard broadcast band covering the frequencies from 550 to 1500 K.C.

LINE-UP CAPACITOR ADJUSTMENTS

To align the 242 chassis, it is essential to use a high grade modulated test oscillator and a sensitive output meter. The R.F. signal fed into the receiver must be very weak or it will cause the A.V.C. to function, making correct alignment difficult. The sensitivity of the output meter must be sufficient to give satisfactory reading with a low input signal.

Before attempting to align the receiver, the service man should familiarize himself with the general layout of the chassis, the location of the tubes and various alignment condensers. A top view of the chassis is shown in Fig. #1 and should be carefully studied before the actual work is started.

ADJUSTMENT OF I.F. (175 K.C.)

1. Set the volume control to maximum position.

2. Connect output meter across terminals of speaker voice coil.

3. Set the test oscillator to 175 K.C., and apply test signal to the grid of the second I.F. tube through a .25 mfd. blocking condenser.

4. Adjust alignment condenser "A" for maximum output.

5. Apply the test signal to the grid of the first detector tube.

NOTE: In the alignment of the 1st I.F. stage of this receiver it is necessary to use a "losser" so as to flatten out the top of the selectivity curve to give better tone quality. The "losser" consists merely of a .05 mfd. condenser and 1000 ohm resistor connected in series.

6. With the "losser" on the plate of the first detector tube to ground, adjust "B" (top) alignment condenser to maximum output.

7. With the "losser" on the grid of the 1st I.F. tube adjust "C" (bottom) alignment condenser to maximum output.

8. Do not recheck the first I.F. transformer without the "losser".

ADJUSTMENT OF OSCILLATOR AND R.F.

1. Set the test oscillator and pointer on scale to 1400 K.C.

2. Adjust the oscillator trimmer condenser "D" until the signal is received.

NOTE: When adjusting the oscillator trimmer condenser, the signal will be received at two different settings. Use the signal received with the alignment screws turned farthest out.

3. Apply the test signal to the antenna lead of the receiver through a .0002 mfd. series condenser and adjust the preselector alignment condenser "E" and antenna alignment condensers for maximum output.

4. Set the test oscillator and receiver to 600 K.C.

5. Adjust the oscillator lagging condenser "F" until the signal is received.

6. Return both the test oscillator and receiver to 1400 K.C.

7. Recheck the oscillator, preselector and antenna trimmer condensers.

8. Check calibration and sensitivity over the scale.

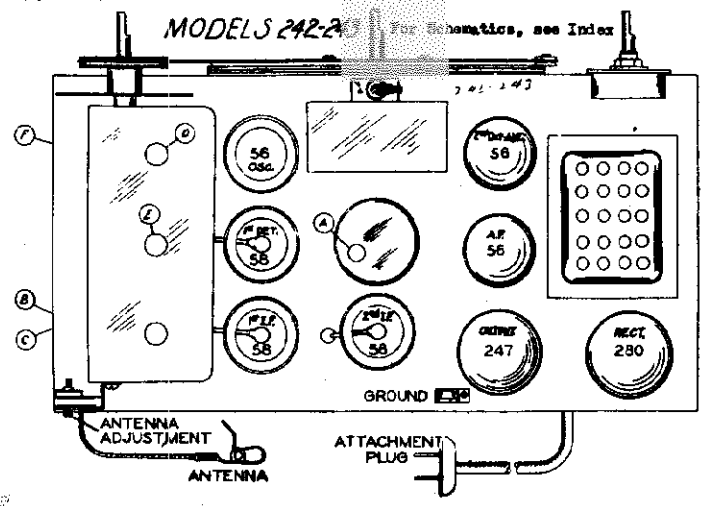

ELECTRICAL SPECIFICATIONS

Type and Number of Tubes	3 #58, 3 #56, 1 #47, 1 #80 - Total 8
Power Supply Characteristics	Model 242 105 to 125 volt, 50 to 60 cycle A.C.
	Model 243 105 to 125 volt, 25 to 50 cycle A.C.
Power Consumption	70 Watts
Maximum Undistorted Output	2.5 Watts
Tuning Range	550 to 1500 K.C.
Line-Up Frequencies	I.F. 175 K.C., 1400 K.C., 600 K.C.

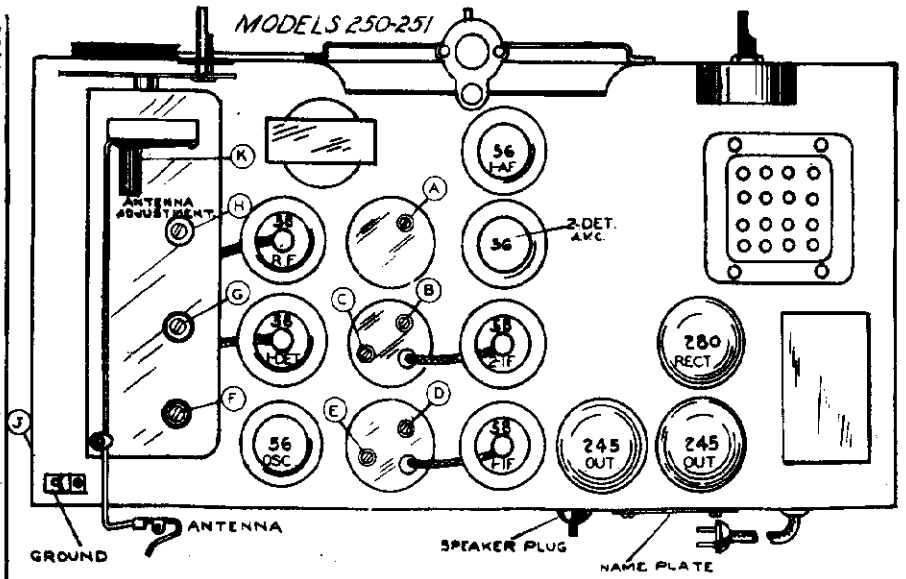

ELECTRICAL SPECIFICATIONS

Type and Number of Tubes	4 #58, 3 #56, 2 #45, 1 #80 - Total 10
Power Supply	(Model 250 - 105 to 125 volts, 50 to 60 cycles AC (Model 251 - 105 to 125 volts, 25 cycles AC
Power Consumption	120 Watts
Maximum Undistorted Output	4 Watts
Maximum Output	6 Watts
Tuning Range	550 to 1500 K.C.
Line-Up Frequencies	I.F. 175 K.C., 1400 K.C., 600 K.C.

GENERAL DESCRIPTION

This model is a ten-tube superheterodyne receiver whose circuit employs a type 58 tube as an R.F. amplifier, a type 58 tube as a first detector, a type 56 tube as an oscillator, two type 58 tubes as I.F. amplifiers, a type 56 as a combined second detector - A.V.C., a type 56 tube as a first A.F. amplifier, two type 45 tubes in a push-pull output stage, and a type 80 rectifier tube.

This receiver is designed to operate over the standard broadcast band on frequencies from 550 to 1500 K.C.

LINE-UP CAPACITOR ADJUSTMENTS

To align the Model 250 chassis, it is essential to use a high grade modulated test oscillator and a sensitive output meter. The R.F. signal fed into the receiver must be relatively weak or it will cause the A.V.C. to function, making correct alignment difficult. The sensitivity of the output meter must be sufficient to give satisfactory reading with a low signal.

Before attempting to align a receiver, the service man should familiarize himself with the general layout of the chassis, the location of the tubes and various alignment condensers. A top view of the chassis is shown in Figure #1 and should be carefully studied before the actual work is started.

ALIGNMENT OF I.F. (175 K.C.)

1. Connect the output meter across the terminals of the voice coil.
2. Turn the volume control to maximum position.
3. Set the test oscillator to 175 K.C. and apply signal to the grid of the type 58 second I.F. tube and adjust trimmer condenser "A" to maximum output.
4. Apply test signal to grid of type 56 first I.F. tube and adjust trimmers "B" and "C" to maximum output.
5. Apply test signal to grid of type 58 first detector tube and adjust trimmer condensers "D" and "E" to maximum output.

ALIGNMENT OF OSCILLATOR AND R.F.

1. Set test oscillator and dial indicator to 1400 K.C. and adjust alignment condenser "F" until the signal is received.
2. Set test oscillator and dial indicator to 600 K.C. and adjust alignment condenser "J" until the signal is received.
3. Set test oscillator and dial indicator to 1400 K.C. and apply signal to antenna lead of receiver.
4. Adjust trimmer condensers "G", "H" and "K" to maximum output.
5. Check sensitivity at several points over the scale.

©John F. Rider, Publisher

MODELS 501, 502
Socket, Trimmers
Alignment

UNITED AMERICAN BOSCH

MODELS 305, Ed. 1, 305A
MODELS 480, 481, 484
Socket, Chassis

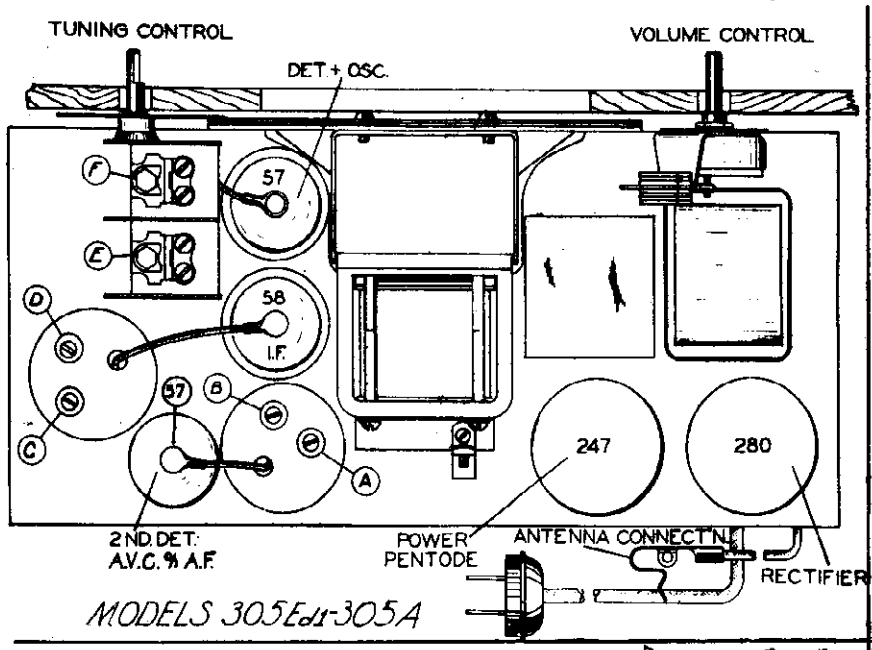

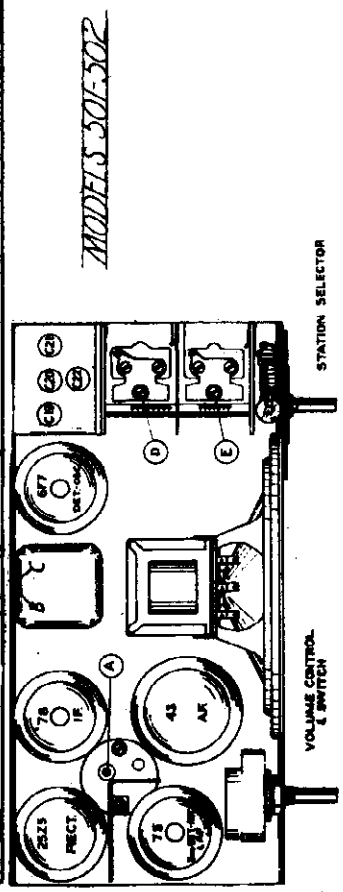

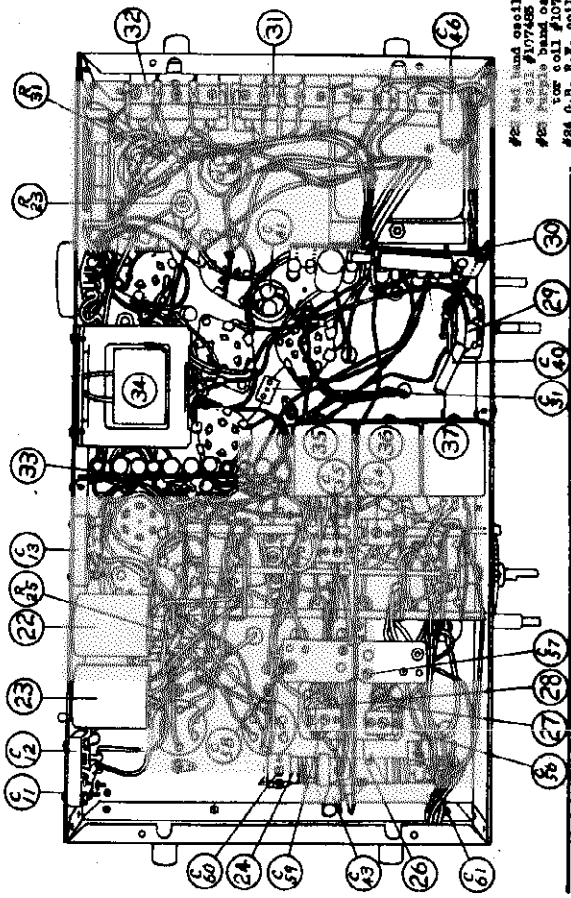

#22 Red band oscillator coil #107485
#23 Purple band oscillator coil #107484
#24 O.S. R.F. coil #107491
#25 Tuning Ind. #107808
#26 O.S. antenna coil #107486
#27 R.B. antenna coil #107487
#28 R.B. R.F. coil #107488
#29 Tone control and switch #107824
#30 Resistor strip #107809
#31 Filter chokes #105854
#32 Filter chokes #107804
#33 Resistor strip #107808
#34 Input transformer #107864
#35 B.B. R.F. coil #107490
#36 B.B. preselector coil #107489
#37 B.B. antenna coil #107485

ELECTRICAL SPECIFICATIONS

Type and Number of Tubes ..... 1 #77, 1 #76, 1 #75, 1 #43, 1 #25 - Total 5
Power Supply Characteristics ..... 105 to 125 volt D.C. or 60-cycle A.C.
Power Consumption ..... 45 Watts
Tuning Range ..... 540 to 1760 K.C.
Maximum Undistorted Output ..... 1 Watt
Line-Up Frequencies ..... 456 K.C., 1500 K.C.

GENERAL DESCRIPTION

The Models 501 and 502 are five-tube, A.C.-D.C., superheterodyne receivers whose circuits consist of a combined first detector-oscillator, a stage of intermediate frequency amplification, a combined second detector - automatic volume control - audio amplifier, a power output stage and a rectifier.

The Models 501 and 502 are designed to operate on frequencies from 540 to 1760 K.C. The Model 502 differs from the Model 501 in the cabinet only.

LINE-UP CAPACITOR ADJUSTMENTS

To align the Models 501 and 502 chassis, it is essential to use a well calibrated and sensitive signal generator. The R.F. signal fed into the receiver must be very weak or it will cause the A.V.C. to function, making correct alignment impossible. The sensitivity of the output meter must be sufficient to give satisfactory reading with a low signal.

Before attempting to align a receiver, the service man should familiarize himself with the general layout of the chassis, the location of the tubes and various alignment condensers. A top view of the chassis is shown in Fig. #1 and #2 and should be carefully studied before the actual work is started.

I.F. ADJUSTMENT (456 K.C.)

NOTE: The signal generator or alignment oscillator should have no external ground connection of the low potential side of its output either to ground or to the power line, and the low potential output terminal may be connected to the frame of the receiver. An external ground of the receiver frame will result in a loud hum making alignment impossible.

1. Connect output meter across the voice coil of speaker (speaker impedance is 4.5 ohms).
2. Set volume control at maximum.
3. Set the test oscillator to 456 K.C. and apply test signal to the grid of the 78 I.F. tube.
4. Adjust second I.F. alignment condenser #4 for maximum output.
5. Apply the test signal to the grid of the 6F7 first detector-oscillator tube.
6. Adjust alignment condensers "g" and "c" to maximum output.

OSCILLATOR AND R.F. ADJUSTMENT

1. Set dial scale to maximum mark beyond the 540 K.C. point with the gang condenser entirely closed.
2. Set the test oscillator and dial scale to 1500 K.C. and apply test signal to the antenna of the receiver.
3. Adjust the oscillator and antenna alignment condensers "f" and "g" to maximum output.
4. Check sensitivity over scale.

©John F. Rider, Publisher

UNITED AMERICAN BOSCH CORP.

MODELS 305 Ed. 2-405

Five-Tube, Superheterodyne Receivers

SERVICE PARTS LIST MODELS 305 Ed. 2-405

SOCKET VOLTAGES

Stage	Tube	Filament	Plate	Screen	Cathode	Grid
Det. & Osc.	57	2.47	245	85	7	0
2nd Det.	2A6	2.48	75	--	.7	0
I.F.	58	2.47	248	85	3.	0
Output	47	2.5	235	248	0	18
Rect.	80	5	360	--	-	-

NOTE: These values are readings of a high resistance voltmeter from each socket terminal to ground. The filament voltages are, of course, an exception. Cathode readings are given for those tubes having the grid at ground. The values are only approximate and will vary with the line voltage and the type of meter employed.

Dia.#	Part #	Description
R 1	SA 104897	500,000 ohm vol. control
R 2	SA 101181	300 ohm, 1/2 W. resistor
R 3	SA 100197	25,000 ohm, 1/2 W. res.
R 4	SA 101722	30,000 ohm, 1 W. res.
R 5	SA 104824	7,500 ohm, 1/2 W. res.
R 6	SA 100823	2,000 ohm, 1/2 W. res.
R 7	SA 100824	5,000 ohm, 1/2 W. res.
R 8	SA 100195	1/4 meg., 1/2 W. res.
R 9	SA 100194	1/2 meg., 1/2 W. res.
R10	SA 100196	2 meg., 1/2 W. resistor
R11	SA 99412	5 ohm midtap resistor
R12	SA 103062	400 ohm, 1 W. resistor
R13	SA 100194	1/2 meg., 1/2 W. res.
C 1)	SA 104820	Variable tuning cond.
C 2)		
C 3	SA 100198	.002 mfd., mica cond.
C 4		70 to 140 mmf. cond. - part of SA 104901
C 5		.05 mfd., 200 V. cond. - part of SA 104834
C 6		.25 mfd., 200 V. cond. - part of SA 104834
C 7		.01 mfd., 400 V. cond. - part of SA 104834
C 8		70 to 140 mmf. cond. - part of SA 104901
C 9		70 to 80 mmf. condenser - part of SA 104899
C10		70 to 80 mmf. condenser - part of SA 104899
C11	SA 103852	.002 mfd., 600 V. cond.
C12		.5 mfd., 200 V. cond. - part of SA 104834
C13		.005 mfd., 400 V. cond. - part of SA 104834
C14		.05 mfd., 200 V. cond. - part of SA 104834
C15		.005 mfd., 400 V. cond. - part of SA 104834
C16)		8 mfd., filter condenser
C17)	SA 105237	4 mfd., filter condenser
C18)		20 mfd., filter cond.
C19	SA 102500	.01 mfd., 400 V. cond.
C20	SA 101143	.0001 mfd., mica cond.
C21	SA 104686	.00025 mfd., mica cond.
C22	SA 103695	.01 mfd., 600 V. cond.
C23	SA 102493	.05 mfd., 200 V. cond.

R 15, C 23 and C 11 to be used on Model 405 only.

Part #	Description
	MAIN ASSEMBLIES
SA 104905	Chassis assy. - Model 305 Ed.
SA 105153	Chassis assy. - Model 405
SA 102280	Speaker - Model 305 Ed. 2
SA 105130	Speaker - Model 405
RK 104856	Cabinet - Model 305 Ed. 2
RK 105175	Cabinet - Model 405
	COILS
SA 101858	Speaker field coil
SA 104928	Antenna coil
SA 104899	I.F. coil
SA 104901	Detector-osc. coil assembly
	TRANSFORMERS
SA 102551	Output transformer
SA 104555	Power transformer
	MISCELLANEOUS
SA 104816	Dial scale assembly
SA 102282	Diaphragm & voice coil assy.
SA 101869	Felt foot for cabinet
SA 99401	Knob
SA 98713	Dial lamp

©John F. Rider, Publisher

MODELS 305,Ed.2,405
Socket,Trimmers
Alignment

AMERICAN-BOSCH RADIO MODELS 305 Ed. 2-405

Five-Tube, Superheterodyne Receivers

SERVICE NOTES

GENERAL DESCRIPTION

The Models 305 Ed. 2 and 405 are five-tube superheterodyne receivers whose circuits comprise a combined first detector-oscillator, an intermediate frequency amplifier, a combined second detector-automatic volume control - first audio amplifier, an output stage and a rectifier.

The receiver is designed to operate over the broadcast band covering the frequencies from 550 to 1720 K.C.

The Model 305 Ed. 2 is a personal model with the speaker mounted on the chassis.

The Model 405 is a console model with a separate speaker.

LINE-UP CAPACITOR ADJUSTMENTS

To align the Model 305 Ed. 2 or 405 chassis, it is essential to use a high grade modulated oscillator and sensitive output meter. The R.F. signal fed into the receiver must be very weak or it will cause the A.V.C to function, making correct alignment impossible. The sensitivity of the output meter must be sufficient to give satisfactory reading with a low signal.

Before attempting to align a receiver, the service man should familiarize himself with the general layout of the chassis, the location of the tubes and various alignment condensers. A top view of the chassis is shown in Fig. #1 and should be carefully studied before the actual work is started.

I.F. ADJUSTMENT 456 K.C.

1. Connect output voltmeter to speaker.
2. Set volume control at maximum position.
3. Set signal generator at 456 K.C., and connect generator output lead to grid of I.F. tube.
4. Adjust condensers A & B on coil nearest back of set for maximum output as indicated on output voltmeter. Sensitivity at this point should be 300 microvolts.
5. Connect signal generator output lead to grid of first detector. Adjust condensers C & D on front coil to maximum output as indicated on output voltmeter.

OSCILLATOR ALIGNMENT

1. Switch generator to R.F. and set at 1400 K.C.
2. Connect generator lead to antenna.
3. Set scale to 100 with gang closed tightly.
4. Adjust condenser gang to a scale reading of 21 and peak oscillator trim condenser. (This condenser is the back alignment screw on gang condenser.)
5. To check I.F. alignment, connect I.F. signal generator to antenna; second harmonic should be at 912 K.C., third at 1368 K.C.
6. Adjust preselector trimmer condenser (on front section of gang condenser) to maximum output.

NOTE: If it is necessary to improve sensitivity at 600 or 1000 K.C., adjust plates until the set reaches the sensitivity limits. If bending plates does not help, change tubes. Oscillator condenser end plates should be bent out at 1700 K.C. end of condenser.

ELECTRICAL SPECIFICATIONS

Type and Number of Tubes ..... 1 #57, 1 #58, 1 #2A6, 1 #47, 1 #80 - Total 5
Power Supply Characteristics ..... 105 to 125 volt, 60 cycle A.C.
Power Consumption ..... 55 Watts
Tuning Range ..... 550 to 1720 K.C.
Total Power Output ..... 2.5 Watts
Line-Up Frequencies ..... I.F. 456 K.C., 1400 K.C.

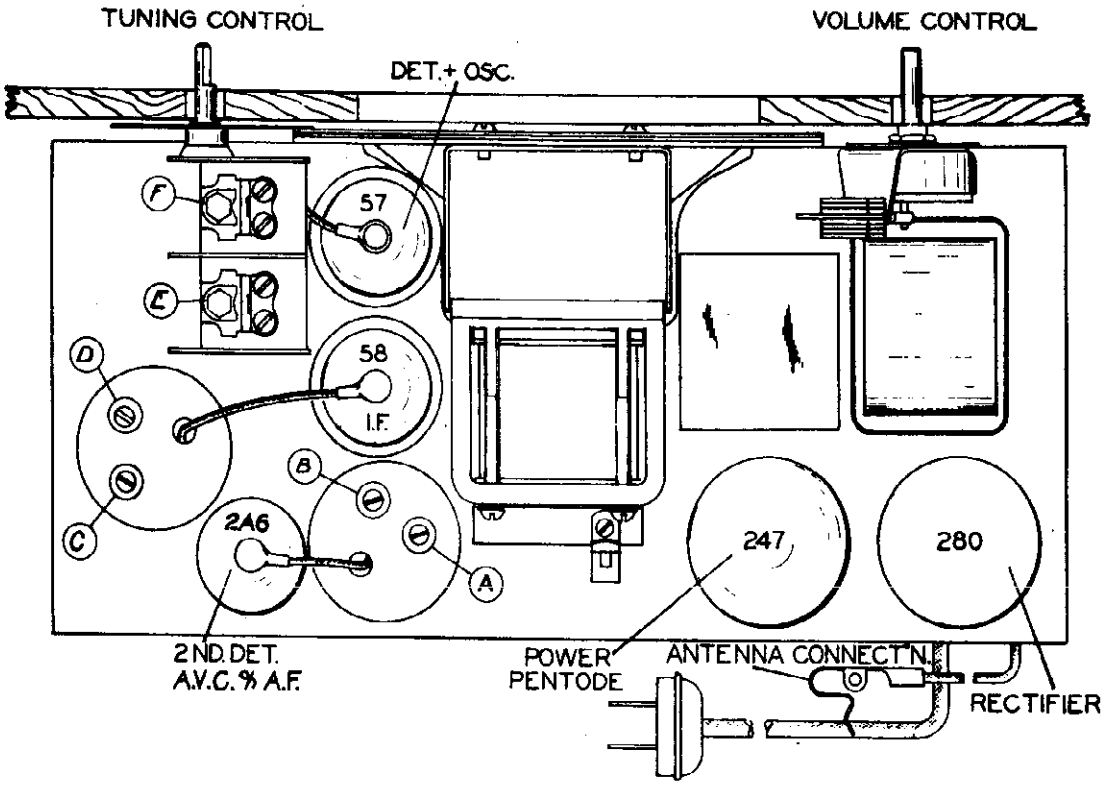

©John F. Rider, Publisher

Schematic, Data

UNITED AMERICAN BOSCH CORP.

MODELS 360(Late) 361.364

Power Supply Characteristics (Model 360 ---------- 105 to 125 volts, 50 to 60 cycles
(Model 361 ---------- 105 to 125 volts, 25 to 50 cycles
(Model 364 ---------- 90 to 250 volts, 50 to 60 cycles

Power Consumption ---------- 60 Watts
Maximum Undistorted Output ---------- 3 Watts
Tuning Range ---------- 550 to 20,000 K.C.
Line-Up Frequencies --------- I.F. 456 K.C., 600 K.C., 1400 K.C., 1600 K.C., 3600 K.C., 4000 K.C., 8000 K.C., 10,000 K.C., 15,000 K.C.

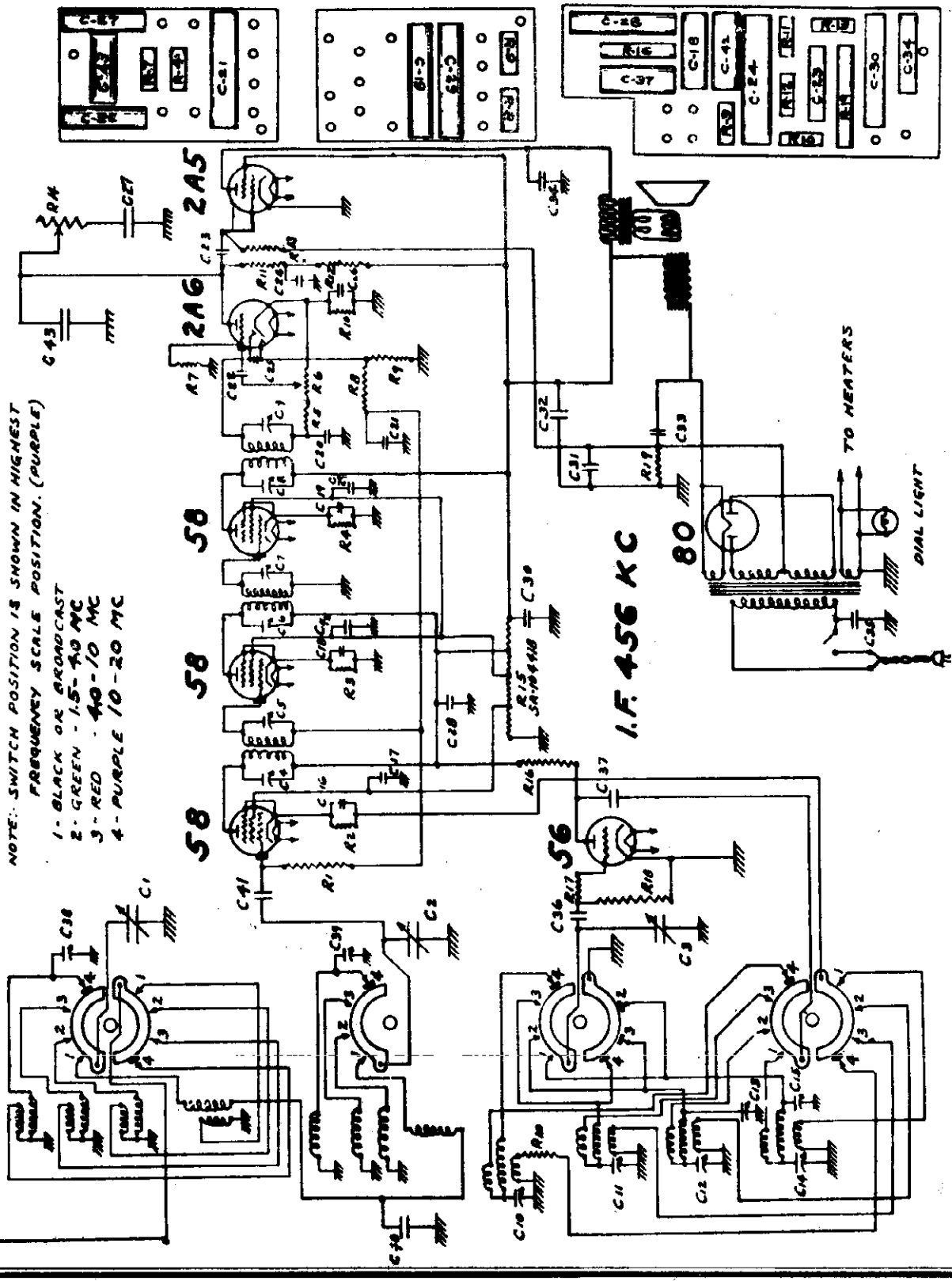

© John F. Rider, Publisher

©John F. Rider, Publisher

LINE-UP CAPACITOR ADJUSTMENTS

To properly align the Model 360 chassis, it is essential to use a high grade modulated oscillator and a sensitive output meter. The A.V.C. signal fed into the receiver must be relatively weak or it will cause the A.V.C. to function making correct alignment impossible. The sensitivity of the output meter must be sufficient to give satisfactory reading with a low signal.

Before attempting to align a receiver, the service man should familiarize himself with the general layout of the chassis, the location of the tubes and the various alignment condensers. A top view of the chassis is shown in Fig. #1 and should be carefully studied before the actual work is started.

A- ADJUSTMENT OF I.F. (456 K.C.)

1. Set test oscillator to 456 K.C.
2. Apply test signal to grid of second I.F. tube #6 and adjust #14 and #15 to maximum output, reducing test oscillator as required.
3. Apply test signal to grid of first I.F. amplifier #6 and adjust #16 and #17 to maximum output.
4. Apply test signal to grid of first detector #11 and adjust #18 and #19 to maximum output.
5. Recheck the above four operations for accuracy.

B- ADJUSTMENT OF BLACK BAND & R.F.

1. Set test oscillator to 1500 K.C. and apply signal to grid of first detector tube #11. Place pointer of radio to 1.5 mark on dial. Adjust #20 until signal is tuned in. This adjusting screw is usually designated by a Red color dot. Having obtained tune at this point, set test oscillator to 600 K.C. and tune station selector to .6 mark on dial. Adjust #21 until the signal is tuned in.
2. Now return to 1500 K.C. point with set and test oscillator and make the resetting of #20 to obtain accurate adjustment to scale reading.
3. Apply test signal to antenna lead, making sure the equivalent (200 mmf.) is in the circuit and with test oscillator and dial indicator still set at 1500 kilocycles, adjust trimmer #22 and #23 for maximum output. Check sensitivity and calibration at several points on dial.
4. Set should come correctly to kilocycle settings of important broadcasting stations.

C- ADJUSTMENT OF GREEN BAND

1. Set test oscillator to 3500 K.C. and indicator of radio at 3.6 mark on dial.
2. Adjust trimmer #24 until signal is tuned in. This trim condenser is usually marked with a Red color dot.
3. Set test oscillator at 1600 K.C. and tune set to 1.6 mark. Adjust #25 to maximum output.
4. Return to 3600 K.C. and repeat adjustment. In adjusting the 3600 K.C. point it is possible to obtain two settings for different position of the trim condenser. This denotes merely the plus and minus frequency between oscillator and test oscillator which will give the correct I.F. frequency. The correct setting of the trim condenser is the one wherein the screw is turned furthest out. In any event, an incorrect setting will always be denoted by lack of sensitivity and calibration when the set and test oscillator are tuned to 2500 K.C. (mid-band).

D- ADJUSTMENT OF RED BAND

1. Set test oscillator to 8000 K.C. marking and tune receiver in region of 8.0 on dial scale. Note when signal is received. Next set test oscillator to 4000 K.C. setting and tune set to 4.0 on dial scale. Adjust #26 on right side of chassis until signal is heard.
2. Return set and test oscillator to 6000 K.C. and observe pointer setting and sensitivity. Slight deviations from calibration can be compensated by manipulating the stiff wires connecting the oscillator coil to switch.

E- ALIGNING THE PURPLE BAND

1. Set test oscillator to 20,000 K.C. or if this is not available, then adjust to highest possible frequency, which preferably should be at least 15,000 K.C. Tune set to this frequency and note where set oscillator is received on dial scale. Then place test oscillator on 10,000 K.C. and adjust #27 on right of chassis until test oscillator is tuned at 10 on dial scale.
2. Now return both test oscillator and radio set to high frequency. Located underneath the base and adjacent to the switch and high frequency selector coils are two trim condensers #28 & #29 which are used for correct adjustment at this high frequency. Increase setting of test oscillator until signal generator can be tuned in at two points on dial (say 20 and 19). Then with pointer of set at 20 adjust #28 & #29 for maximum output decreasing test signal as signal becomes better tuned. At correct adjustment a very loud signal will be obtained at 20 on dial while a feeble signal or none at all is observed at 19.

The adjustment instructions just given apply to the Model 360 receiver which is in reasonable operating condition, but in some manner has been thrown out of adjustment. Obviously, before the radio service man can go through with the adjustments given here, he must assure himself that defective tubes, injured parts, such as punctured condensers, shorted variable condensers, open resistors, scratched high frequency coils, etc., are not such as to cause the set to be inoperative on one or more bands of frequencies.

SERVICE DATA

Noises when chassis is jarred, or sudden breaking into oscillations and whistling, are caused by poor contact between the bases of the tube shields and chassis. These bases are riveted to the chassis, but should oxide form on the aluminum it will cause poor contact.

This can be corrected by drilling small holes through the shield bases near the rivets and bolting the bases tightly to the chassis with Parker Kalon self-tapping screws.

GENERAL DESCRIPTION

The Model 360 is a seven tube, four band, all-wave, superheterodyne receiver whose circuits comprise an oscillator, a first detector, two stages of intermediate frequency amplification, a combined second detector, automatic volume control and first audio amplifier, an output stage and a rectifier.

This receiver has four bands with the following frequency coverages: On the broadcast band, printed in Black, 540 to 1500 K.C. On the green band, 1500 to 4000 K.C. On the red band, 3500 to 9000 K.C. On the purple band, 8000 to 20,000 K.C.

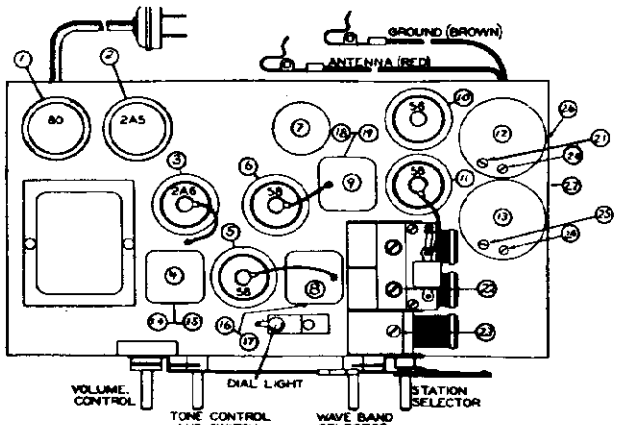

PARTS LIST

MODEL 361

All parts the same as for Model 360 except for the following:

MAIN ASSEMBLIES

SA 106445	Chassis assembly (Models 361W, 361X, 361Y)	

MISCELLANEOUS

SA 106098	Power transformer assembly	

MODEL 364

The Model 364 has been designed to operate on power line voltage of from 90 to 250 volts, 50 to 60 cycles. In cases where the line voltage fluctuates considerably, it is recommended that the 80 rectifier tube be replaced with an 83 V. rectifier. This requires no change in the power transformer but a 400 ohm 8 watt resistor (part #SA 102177) should be connected in series with the B-plus lead at the rectifier socket.

All parts are the same as the Model 360 except:

MAIN ASSEMBLIES

SA 106448	Chassis assembly (Models 364W, 364X, 364Y)	

SPEAKER, PARTS (SA 105575)

SA 102615	Diaphragm & voice coil assy.	
SA 102661	Output transformer	
SA 101856	Field coil	
FP 102270	Plate over core & frame assy.	
SA 101753	Core and frame assembly	

BRACKETS & CLAMPS

FP 79381	Clamp for speaker cable	
FP 106819	Clamp for speaker (Model 360W	
SA 105684	Dial scale bracket	
SA 105685	Dial scale bracket	

CABLES & CABLE ASSEMBLIES

SA 101711	Line cable assembly	
KL 102064	Speaker cable	

COILS

SA 105684	Oscillator coil	(Black Band)
SA 105683	Oscillator coil	(Green Band)
SA 105689	Oscillator coil	(Red Band)
SA 105687	Oscillator coil	(Blue Band)
SA 105690	Preselector coil	(Black Band)
SA 105691	Preselector coil	(Black Band)
SA 105685	Preselector coil	(Green Band)
SA 105686	Preselector coil	(Red Band)
SA 105688	Preselector coil	(Blue Band)
SA 105696	Intermediate coil (1st & 2nd I.F.)	
SA 105696	Intermediate coil (Diode)	

SOCKET VOLTAGES

Tube	Stage	Fil.	Plate	Screen	Cathode	Grid
58	1st Det.	2.65	220	40	2.8	
58	1st I.F.	2.65	220	95	2.0	
56	2nd I.F.	2.65	240	95	2.7	
56	Oscillator	2.65	75	-	0	
2A6	2nd Det.	2.65	90	-	1.4	
2A5	Output	2.65	255	240	0	
80	Rectifier	4.8	-	-	-	

Bias on 2A5 (across 400 ohms) - 22 volts
Output of rectifier ----------360 volts

Line volts ---------- 115
Power ---------- 60 watts

NOTE: These values are readings of a high resistance voltmeter from each socket terminal to ground, with the exception of the filament voltages. The values are only approximate and will vary with the line voltage and the type of meter employed.

MODEL 360

Dia #	Part #	Description
R 11	SA 105279	1/4 meg., 1/4 W. res.
R 12	SA 105276	50,000 ohm, 1/4 W. res.
R 13	SA 105279	1/4 meg., 1/4 W. res.
R 14	SA 105561	Tone control (1/2 meg.)
R 15	SA 104418	Multiple resistance
R 16	SA 100197	25,000 ohm, 1/2 W. res.
R 17	SA 100814	50 ohm, 1/2 W. res.
R 18	SA 105274	20,000 ohm, 1/4 W. res.
R 19	SA 105265	400 ohm, 1 W. resistor
R 20	SA 105256	200 ohm, 1/4 W. res.

Part #		Description
		MAIN ASSEMBLIES
SA	105720	Chassis assembly (Models 360E, 360M, 360S, 360T)
SA	106460	Chassis assembly (Models 360W, 360X, 360Y)
RK	105752	Cabinet assembly (Model 360S)
RK	105629	Cabinet assembly (Model 360U)
RK	105768	Cabinet assembly (Model 360S)
RK	105622	Cabinet assembly (Model 360T)
RK	106304	Cabinet assembly (Model 360W)
RK	106305	Cabinet assembly (Model 360X)
RK	106306	Cabinet assembly (Model 360Y)
SA	105750	Speaker assembly (Models 360E, 360M, 360S, 360X, 360Y)
SA	106575	Speaker assembly (Models 360T, 360W)
C	1)	Variable tuning cond.
C	2) SA	106352 Variable tuning cond.
C	3)	Variable tuning cond.
C	4	I.F. trimmer cond. - part of SA 106695
C	5	I.F. trimmer cond. - part of SA 105695
C	6	I.F. trimmer cond. - part of SA 105695
C	7	I.F. trimmer cond. - part of SA 105695
C	8	I.F. trimmer cond. - part of SA 105696
C	9	I.F. trimmer cond. - part of SA 105696
C	10 SA	103800 9000 mmf. alignment condenser
C	11 SA	103800 2000 mmf. alignment condenser
C	12	1200 mmf. align. cond. - part of SA 105683
C	13	7-70 mmf. align. cond. - part of SA 105683
C	14	300 mmf. align. cond. - part of SA 105684
C	15	7-70 mmf. align. cond. - part of SA 105684
C	16 SA	102493 .05 mfd., 200 V. cond.
C	17 SA	102493 .05 mfd., 200 V. cond.
C	18 SA	102493 .05 mfd., 200 V. cond.
C	19 SA	102493 .05 mfd., 200 V. cond.
C	20 SA	101143 100 mmf. mica condenser
C	21 SA	102493 .05 mfd., 200 V. cond.
C	22 SA	103659 .005 mfd., 400 V. cond.
C	23 SA	103659 .005 mfd., 400 V. cond.
C	24 SA	102494 .1 mfd., 400 V. cond.
C	25 SA	101143 100 mmf. mica condenser
C	26 SA	102499 .5 mfd., 200 V. cond.
C	27 SA	106277 .01 mfd., 400 V. cond.
C	28 SA	102494 .05 mfd., 400 V. cond.
C	29 SA	102493 .05 mfd., 200 V. cond.
C	30 SA	102492 .05 mfd., 400 V. cond.
C	31)	20 mfd. elec. condenser
C	32) CR	954 4 mfd. elec. condenser
C	33)	8 mfd. elec. condenser
C	34 SA	103659 .005 mfd., 400 V. cond.
C	35 SA	106931 .01 mfd., 600 V. cond.
C	36 SA	101143 100 mmf. mica condenser
C	37 SA	102493 .05 mfd., 200 V. cond.
C	38 SA	105705 Trimmer cond. purple band
C	39 SA	105705 Trimmer cond. purple band
C	40 SA	102493 .05 mfd., 200 V. cond.
C	41 SA	101143 100 mmf. mica condenser
C	42 SA	102493 .05 mfd., 200 V. cond.
C	43 SA	106403 .001 mfd., 600 V. cond.
R	1 SA	105246 1/2 meg., 1/4 W. res.
R	2 SA	105245 2000 ohm, 1/4 W. res.
R	3 SA	105267 1000 ohm, 1/4 W. res.
R	4 SA	105267 1000 ohm, 1/4 W. res.
R	5 SA	105276 50,000 ohm, 1/4 W. res.
R	6 SA	105562 Volume control (1/2 meg.)
R	7 SA	105281 1 meg., 1/4 W. res.
R	9 SA	105281 1 meg., 1/4 W. res.
R	10 SA	105249 5000 ohm, 1/4 W. res.

Schematic, Data

UNITED AMERICAN BOSCH CORP.

MODELS 360(Late) 361.364

Power Supply Characteristics	(Model 360	105 to 125 volts, 50 to 60 cycles
	(Model 361	105 to 125 volts, 25 to 50 cycles
	(Model 364	90 to 250 volts, 50 to 60 cycles
Power Consumption		60 Watts
Maximum Undistorted Output		3 Watts
Tuning Range		550 to 20,000 K.C.
Line-Up Frequencies		I.F. 456 K.C., 600 K.C., 1400 K.C., 1600 K.C., 3600 K.C., 4000 K.C., 8000 K.C., 10,000 K.C., 15,000 K.C.

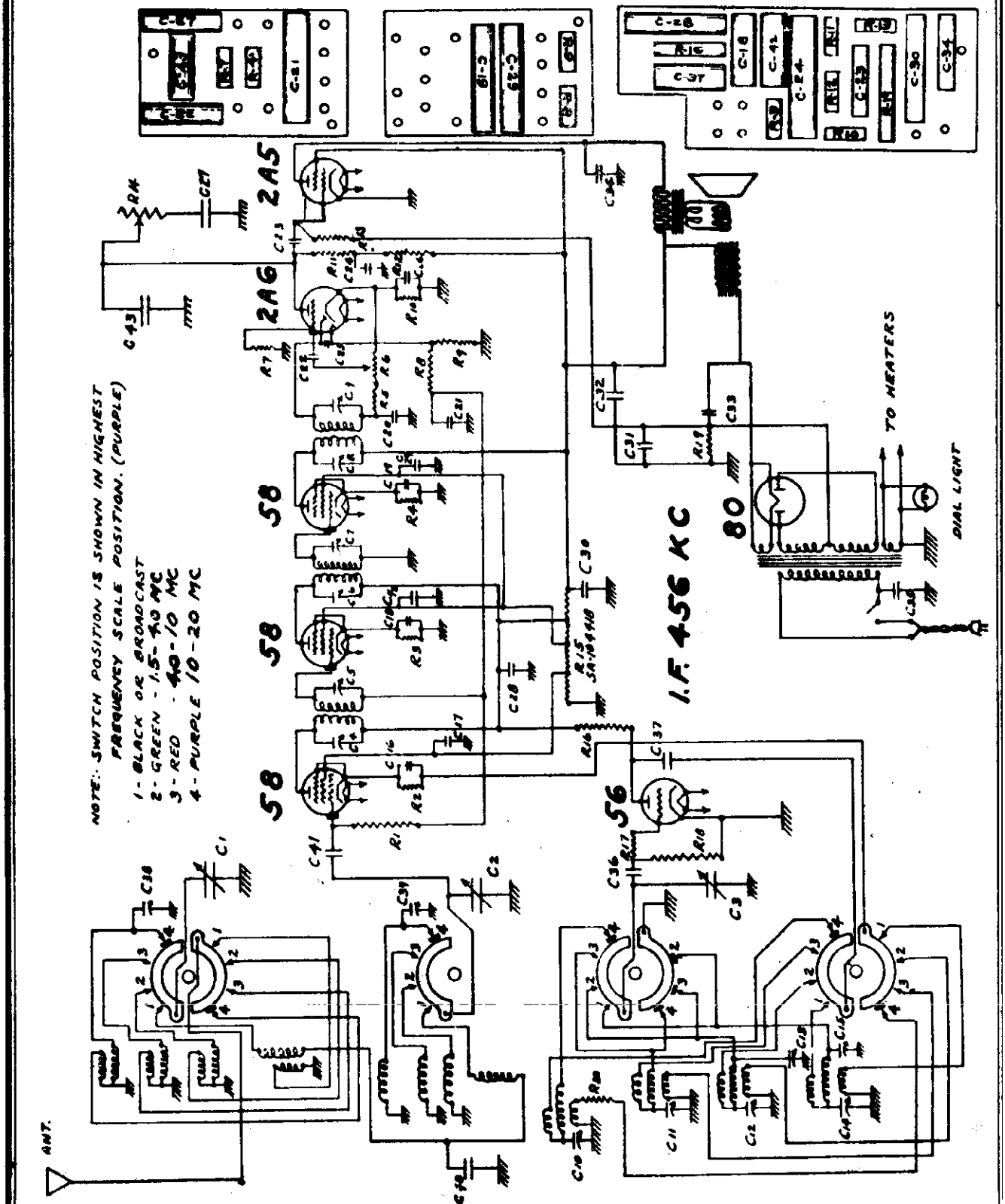

© John F. Rider, Publisher

MODELS 360(Late) 361,364 Socket,Trimmers

UNITED AMERICAN BOSCH CORP.

Alignment,Parts Voltage

©John F. Rider, Publisher

LINE-UP CAPACITOR ADJUSTMENTS

To properly align the Model 360 chassis, it is essential to use a high grade modulated oscillator and a sensitive output meter. The R.F. signal fed into the receiver must be relatively weak or it will cause the A.V.C. to function making correct alignment impossible. The sensitivity of the output meter must be sufficient to give satisfactory reading with a low signal.

Before attempting to align a receiver, the service man should familiarise himself with the general layout of the chassis, the location of the tubes and the various alignment condensers. A top view of the chassis is shown in Fig. #1 and should be carefully studied before the actual work is started.

A- ADJUSTMENT OF I.F. (456 K.C.)

1. Set test oscillator to 456 K.C.
2. Apply test signal to grid of second I.F. tube #6 and adjust #14 and #15 to maximum output, reducing test oscillator as required.
3. Apply test signal to grid of first I.F. amplifier #6 and adjust #16 and #17 to maximum output.
4. Apply test signal to grid of first detector #11 and adjust #18 and #19 to maximum output.
5. Recheck the above four operations for accuracy.

B- ADJUSTMENT OF BLACK BAND & R.F.

1. Set test oscillator to 1500 K.C. and apply signal to grid of first detector tube #11. Place pointer of radio to 1.5 mark on dial. Adjust #20 until signal is tuned in. This adjusting screw is usually designated by a Red color dot. Having obtained tune at this point, set test oscillator to 600 K.C. and tune station selector to .6 mark on dial. Adjust #21 until the signal is tuned in.
2. Now return to 1500 K.C. point with set and test oscillator and make the resetting of #20 to obtain accurate adjustment to scale reading.
3. Apply test signal to antenna lead, making sure the equivalent (200 mmf.) is in the circuit and with test oscillator and dial indicator still set at 1500 kilocycles, adjust trimmer #22 and #23 for maximum output. Check sensitivity and calibration at several points on dial.
4. Set should come correctly to kilocycle settings of important broadcasting stations.

C- ADJUSTMENT OF GREEN BAND

1. Set test oscillator to 3600 K.C. and indicator of radio at 3.6 mark on dial.
2. Adjust trimmer #24 until signal is tuned in. This trim condenser is usually marked with a Red color dot.
3. Set test oscillator at 1600 K.C. and tune set to 1.6 mark. Adjust #25 to maximum output.
4. Return to 3600 K.C. and repeat adjustment. In adjusting the 3600 K.C. point it is possible to obtain two settings for different position of the trim condenser. This denotes merely the plus and minus frequency between oscillator and test oscillator which will give the correct I.F. frequency. The correct setting of the trim condenser is the one wherein the screw is turned furthest out. In any event, an incorrect setting will always be denoted by lack of sensitivity and calibration when the set and test oscillator are tuned to 2500 K.C. (mid-band).

D- ADJUSTMENT OF RED BAND

1. Set test oscillator to 8000 K.C. marking and tune receiver in region of 8.0 on dial scale. Note when signal is received. Next set test oscillator to 4000 K.C. setting and tune set to 4.0 on dial scale. Adjust #26 on right side of chassis until signal is heard.
2. Retune set and test oscillator to 8000 K.C. and observe pointer setting and sensitivity. Slight deviations from calibration can be compensated by manipulating the stiff wires connecting the oscillator coil to switch.

E- ALIGNING THE PURPLE BAND

1. Set test oscillator to 20,000 K.C. or if this is not available, then adjust to highest possible frequency, which preferably should be at least 15,000 K.C. Tune set to this frequency and note where set oscillator is received on dial scale. Then place test oscillator on 10,000 K.C. and adjust #27 on right of chassis until test oscillator is tuned at 10 on dial scale.
2. Now return both test oscillator and radio set to high frequency. Located underneath the base and adjacent to the switch and high frequency selector coils are two trim condensers #28 & #29 which are used for correct adjustment at this high frequency. Increase setting of test oscillator until signal generator can be tuned in at two points on dial (say 20 and 19). Then with pointer of set at 20 adjust #28 & #29 for maximum output decreasing test signal as signal becomes better tuned. At correct adjustment a very loud signal will be obtained at 20 on dial while a feeble signal or none at all is observed at 19.

The adjustment instructions just given apply to the Model 360 receiver which is in reasonable operating condition, but in some manner has been thrown out of adjustment. Obviously, before the radio service man can go through with the adjustments given here, he must assure himself that defective tubes, injured parts, such as punctured condensers, shorted variable condensers, open resistors, scratched high frequency coils, etc., are not such as to cause the set to be inoperative on one or more bands of frequencies.

SERVICE DATA

Noises when chassis is jarred, or sudden breaking into oscillations and whistling, are caused by poor contact between the bases of the tube shields and chassis. These bases are riveted to the chassis, but should oxide form on the aluminum it will cause poor contact.

This can be corrected by drilling small holes through the shield bases near the rivets and bolting the bases tightly to the chassis with Parker Kalon self-tapping screws.

GENERAL DESCRIPTION

The Model 360 is a seven tube, four band, all-wave, superheterodyne receiver whose circuits comprise an oscillator, a first detector, two stages of intermediate frequency amplification, a combined second detector, automatic volume control and first audio amplifier, an output stage and a rectifier.

This receiver has four bands with the following frequency coverage: On the broadcast band, printed in black, 540 to 1500 K.C. On the green band, 1500 to 4000 K.C. On the red band, 3500 to 9000 K.C. On the purple band, 8000 to 20,000 K.C.

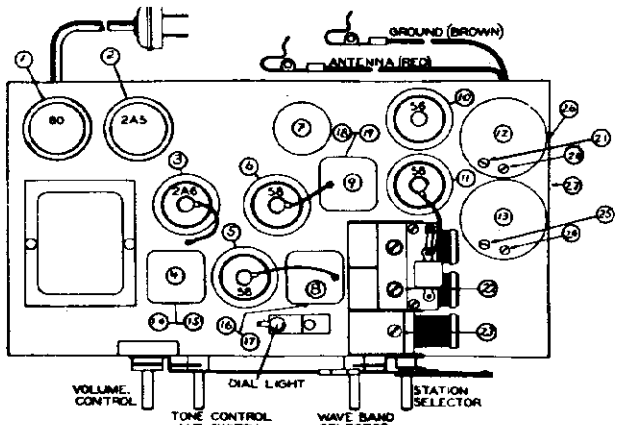

PARTS LIST

MODEL 361

All parts the same as for Model 360 except for the following:

MAIN ASSEMBLIES

SA 106445	Chassis assembly (Models 361W, 361X, 361Y)	

MISCELLANEOUS

SA 106696	Power transformer assembly	

MODEL 364

The Model 364 has been designed to operate on power line voltage of from 90 to 250 volts, 50 to 60 cycles. In cases where the line voltage fluctuates considerably, it is recommended that the 80 rectifier tube be replaced with an 83 V. rectifier. This requires no change in the power transformer but a 400 ohm 8 watt resistor (part #SA 102177) should be connected in series with the B-plus lead at the rectifier socket.

All parts are the same as the Model 360 except:

MAIN ASSEMBLIES

SA 106442	Chassis assembly (Models 364W, 364X, 364Y)	

SPEAKER PARTS (SA 105575)

SA 102819	Diaphragm & voice coil assy.
SA 102551	Output transformer
SA 101858	Field coil
FP 102270	Plate over core & frame assy.
SA 101733	Core and frame assembly

BRACKETS & CLAMPS

FP 79381	Clamp for speaker cable
FP 106819	Clamp for speaker (Model 360W
SA 105654	Dial scale bracket
SA 105655	Dial scale bracket

CABLES & CABLE ASSEMBLIES

SA 101711	Line cable assembly
KL 102064	Speaker cable

COILS

SA 105684	Oscillator coil	(Black Band)
SA 105683	Oscillator coil	(Green Band)
SA 105689	Oscillator coil	(Red Band)
SA 105687	Oscillator coil	(Blue Band)
SA 105690	Preselector coil	(Black Band)
SA 105691	Preselector coil	(Black Band)
SA 105685	Preselector coil	(Green Band)
SA 105686	Preselector coil	(Red Band)
SA 105688	Preselector coil	(Blue Band)
SA 105596	Intermediate coil (1st & 2nd I.F.)	
SA 106696	Intermediate coil (Diode)	

SOCKET VOLTAGES

Tube	Stage	Fil.	Plate	Screen	Cathode	Grid
6S	1st Det.	2.65	220	40	2.5	
6S	1st I.F.	2.65	220	95	2.0	
6S	2nd I.F.	2.65	240	95	2.7	
56	Oscillator	2.65	75	-	0	22
2A6	2nd Det.	2.65	90	-	1.4	
2A5	Output	2.65	255	240	0	
80	Rectifier	6.8	-	-	-	

Bias on 2A5 (across 400 ohms) - 22 volts
Output of rectifier ----------360 volts

Line volts ---------- 115
Power ---------- 60 watts

NOTE: These values are readings of a high resistance voltmeter from each socket terminal to ground, with the exception of the filament voltages. The values are only approximate and will vary with the line voltage and the type of meter employed.

MODEL 360

Dia #	Part #	Description
R 11	SA 105279	1/4 meg., 1/4 W. res.
R 12	SA 105276	50,000 ohm, 1/4 W. res.
R 13	SA 105279	1/4 meg., 1/4 W. res.
R 14	SA 105561	Tone control (1/2 meg.)
R 15	SA 104418	Multiple resistance
R 16	SA 100197	25,000 ohm, 1/2 W. res.
R 17	SA 100814	50 ohm, 1/2 W. res.
R 18	SA 105274	20,000 ohm, 1/4 W. res.
R 19	SA 103062	400 ohm, 1 W. resistor
R 20	SA 105258	200 ohm, 1/4 W. res.

Part #	Description
	MAIN ASSEMBLIES
SA 105720	Chassis assembly (Models 360S, 360M, 360S, 360T)
SA 106440	Chassis assembly (Models 360W, 360X, 360Y)
RK 105752	Cabinet assembly (Model 360S)
RK 105629	Cabinet assembly (Model 360X)
RK 105768	Cabinet assembly (Model 360S)
RK 105622	Cabinet assembly (Model 360T)
RK 106304	Cabinet assembly (Model 360W)
RK 106806	Cabinet assembly (Model 360X)
RK 106806	Cabinet assembly (Model 360Y)
SA 105750	Speaker assembly (Models 360E, 360M, 360S, 360X, 360Y)
SA 106675	Speaker assembly (Models 360T, 360W)
C 1]	Variable tuning cond.
C 2] SA 105352	Variable tuning cond.
C 3]	Variable tuning cond.
C 4	I.F. trimmer cond. - part of SA 105695
C 5	I.F. trimmer cond. - part of SA 105695
C 6	I.F. trimmer cond. - part of SA 105695
C 7	[illegible] cond. - part of SA 105695
C 8	[illegible] cond. - part of SA 105695
C 9	[illegible] cond. - part of SA 105696
C 10	SA 10[illegible] alignment
C 11	SA 10[illegible] alignment
C 12	[illegible] align. cond. - part of SA 105683
C 13	7-70 mmf. align. cond. - part of SA 105683
C 14	300 mmf. align. cond. - part of SA 105684
C 15	7-70 mmf. align. cond. - part of SA 105684
C 16 SA 102493	.05 mfd., 200 V. cond.
C 17 SA 102493	.05 mfd., 200 V. cond.
C 18 SA 102493	.05 mfd., 200 V. cond.
C 19 SA 102493	.05 mfd., 200 V. cond.
C 20 SA 101143	100 mmf. mica condenser
C 21 SA 102493	.05 mfd., 200 V. cond.
C 22 SA 103659	.005 mfd., 400 V. cond.
C 23 SA 103659	.005 mfd., 400 V. cond.
C 24 SA 102494	.1 mfd., 400 V. cond.
C 25 SA 101143	100 mmf. mica condenser
C 26 SA 102499	.5 mfd., 200 V. cond.
C 27 SA 106277	.01 mfd., 400 V. cond.
C 28 SA 102494	.05 mfd., 400 V. cond.
C 29 SA 102493	.05 mfd., 200 V. cond.
C 30 SA 102492	.05 mfd., 400 V. cond.
C 31)	20 mfd. elec. condenser
C 32) CH 554	4 mfd. elec. condenser
C 33)	8 mfd. elec. condenser
C 34 SA 103659	.005 mfd., 400 V. cond.
C 35 SA 105931	.01 mfd., 600 V. cond.
C 36 SA 101143	100 mmf. mica condenser
C 37 SA 102493	.05 mfd., 200 V. cond.
C 38 SA 105705	Trimmer cond. purple band
C 39 SA 105705	Trimmer cond. purple band
C 40 SA 102493	.05 mfd., 200 V. cond.
C 41 SA 101143	100 mmf. mica condenser
C 42 SA 102493	.05 mfd., 200 V. cond.
C 43 SA 106403	.001 mfd., 600 V. cond.
R 1 SA 105246	1/2 meg., 1/4 W. res.
R 2 SA 105245	2000 ohm, 1/4 W. res.
R 3 SA 105267	1000 ohm, 1/4 W. res.
R 4 SA 105267	1000 ohm, 1/4 W. res.
R 5 SA 105276	50,000 ohm, 1/4 W. res.
R 6 SA 105562	Volume control (1/2 meg.)
R 7 SA 105281	1 meg., 1/4 W. res.
R 9 SA 105281	1 meg., 1/4 W. res.
R 10 SA 105249	5000 ohm, 1/4 W. res.

MODELS 310,310A
Socket,Trimmers
Alignment

UNITED AMERICAN BOSCH CORP.

MODEL 307
Socket,Trimmers
Voltage,Alignment

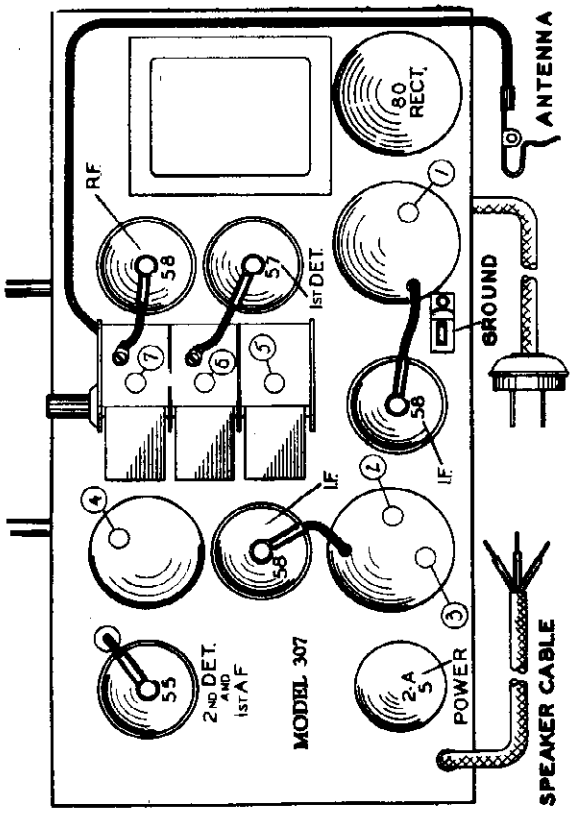

AMERICAN-BOSCH RADIO MODEL 307

Seven-Tube, Superheterodyne Receiver

SERVICE NOTES

ELECTRICAL SPECIFICATIONS

Types and Number of Tubes ---------- 3 #58, 1 #57, 1 #55, 1 #2A5, 1 #80 - Total 7
Power Supply Characteristics ---------- 105 to 125 volts, 50 to 60 cycle, A.C.
Power Consumption ---------- 65 Watts
Tuning Range ---------- 540 to 1600 K.C.
Maximum Undistorted Output ---------- 5 Watts
Line-Up Frequencies ---------- 175 K.C., 1400 K.C., 600 K.C.

GENERAL DESCRIPTION

The Model 307 is a seven-tube superheterodyne receiver whose circuits comprise a stage of radio frequency amplification, a combined first detector-oscillator, two stages of intermediate frequency amplification, a combined second detector-automatic volume control and first audio amplifier, an audio output stage and a rectifier.

The Model 307 is designed to operate on the broadcast band extending from 540 to 1600 kilocycles.

LINE-UP CAPACITOR ADJUSTMENTS

To align the Model 307 chassis, it is essential to use a high grade modulated oscillator and sensitive output meter. The R.F. signal fed into the receiver must be very weak or it will cause the A.V.C. to function, making correct alignment difficult. The sensitivity of the output meter must be sufficient to give satisfactory reading with a low signal.

Before attempting to align a receiver, the service man should familiarize himself with the general layout of the chassis, the location of the tubes and various alignment condensers. A top view of the chassis is shown in Fig. #1 and should be carefully studied before the actual work is started.

I.F. ADJUSTMENT (175 K.C.)

1. Set the volume control on maximum.
2. Set the test oscillator on 175 K.C. and connect to the grid of the second I.F. tube.
3. Adjust alignment condenser #4 on top of third I.F. coil for maximum output.
4. Connect the test oscillator to the grid of the first I.F. tube and adjust the alignment condensers #2 and #3 on top of the second I.F. coil.
5. Connect the test oscillator to the grid of the first detector tube and adjust the alignment condenser #1 on top of the first I.F. coil for maximum output. With the tuning condenser closed, adjust the pointer 1/8" past the second line from the left.

ADJUSTMENT OF OSCILLATOR AND R.F.

1. Set the test oscillator and pointer to 1400 kilocycles.
2. Adjust the oscillator trimmer condenser #5 on the second signal board when turning the alignment screw out.
3. Connect the test oscillator to the antenna lead of the receiver through a 200 mmfd. condenser.
4. Adjust the antenna and R.F. alignment condensers #6 and #7 for maximum output.
5. Check the receiver over scale for sensitivity and calibration.
6. If the oscillator does not track at 600 kilocycles bend the oscillator tuning condenser plates (rear section of tuning condenser) until the receiver reaches its maximum sensitivity.

SOCKET VOLTAGES

Stage	Tube	Plate	Screen	Cathode	Fil.
R.F.	58	175	95	5.5	2.5
1 Det.	57	175	95	4.0	2.5
1 I.F.	58	175	95	4.0	2.5
2 I.F.	58	175	95	4.0	2.5
2 Det.	55	95	45	1.0	2.5
Output	2A5	255	245	17.5	2.5
Rectifier	80				5.0

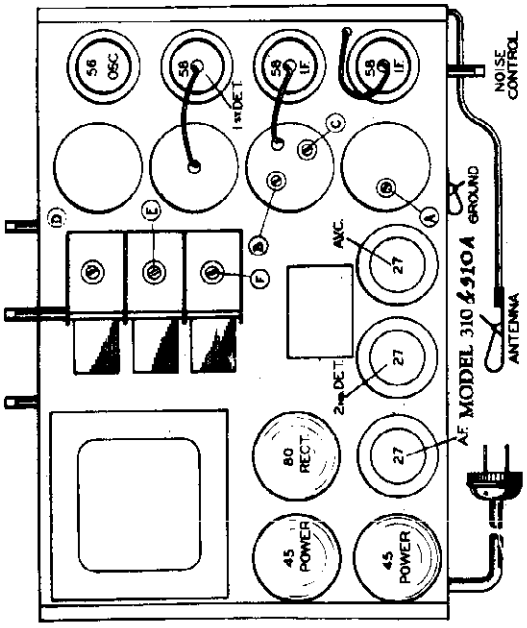

AMERICAN-BOSCH RADIO MODEL 310 & 310A

Ten-Tube, Superheterodyne Receiver

SERVICE NOTES

ELECTRICAL SPECIFICATIONS

Types and Number of Tubes ---------- 3 #58, 1 #55, 3 #57, 2 #45, 1 #80 - Total 10
Power Supply ---------- 105 to 125 volts, 50 to 60 cycle, A.C.
Power Consumption ---------- 110 Watts
Maximum Undistorted Output ---------- 4 Watts
Tuning Range ---------- 6 Watts
Line-Up Frequencies ---------- 550 to 1500 K.C.
---------- 175 K.C., 1400 K.C.

GENERAL DESCRIPTION

This model is a ten-tube superheterodyne receiver designed to operate over the broadcast band on frequencies from 550 K.C. to 1500 K.C.

The circuit employs a type 58 tube as a first detector, a type 56 tube as an oscillator, two type 58 tubes as a second detector, a type 27 as a second frequency amplifier, a type 27 as an automatic volume control tube, a type 27 tube as a first audio amplifier, two type 45 tubes in push-pull output and a type 80 tube as a rectifier.

LINE-UP CAPACITOR ADJUSTMENTS

To properly align the chassis, it is essential to use a high grade modulated test oscillator and a sensitive output meter. The R.F. signal fed into the receiver must be very weak or it will cause the A.V.C. to function making correct alignment difficult. The sensitivity of the output meter must be sufficient to give satisfactory reading with a low signal.

Before attempting to align the chassis, the service man should familiarize himself with the general layout of the chassis, the location of the tubes and various alignment condensers. A top view of the chassis is shown in Fig. #1 and should be carefully studied before the actual work is started.

ALIGNMENT OF I.F. (175 K.C.)

1. Set the volume control and noise delay to maximum position, and tone control to treble position.
2. Set the test oscillator to 175 K.C. and apply test signal to grid of the type 56 second I.F. tube.
3. Adjust trimmer "A" to maximum output.
4. Apply test signal to grid of type 58 first detector tube and adjust trimmers "B" and "C" to maximum output.

ALIGNMENT OF OSCILLATOR AND PERMEATOR

1. Set dial scale and test oscillator to 1400 K.C.
2. Adjust trimmer "D" to maximum output.
3. Apply test signal to antenna lead through a .0002 mfd. condenser
4. Adjust trimmers "E" and "F" to maximum output.
5. Check sensitivity at various points on the dial scale.

©John F. Rider, Publisher

MODELS 462A, 462Y
Schematic, Voltage UNITED AMERICAN BOSCH CORP.

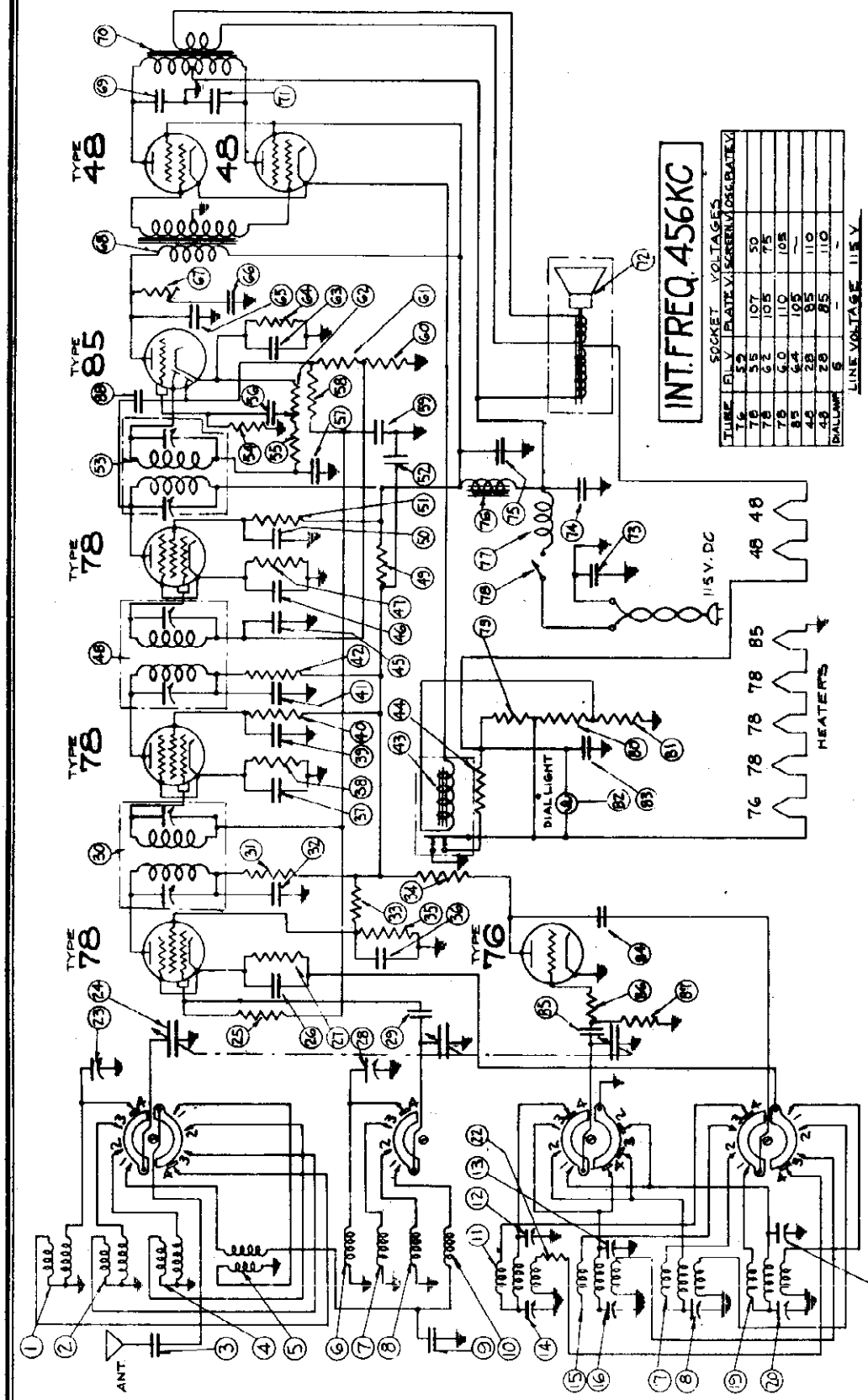

The Model 462 is a seven-tube superheterodyne receiver for operation on direct current of from 105 to 125 volts. The circuit comprises a first detector, an oscillator, two stages of I. F. amplification, a combined double diode second detector and first audio amplifier, and a stage of push-pull audio amplification.

©John F. Rider, Publisher

UNITED AMERICAN BOSCH CORP.

MODELS 462A,462Y
Socket,Trimmers
Chassis

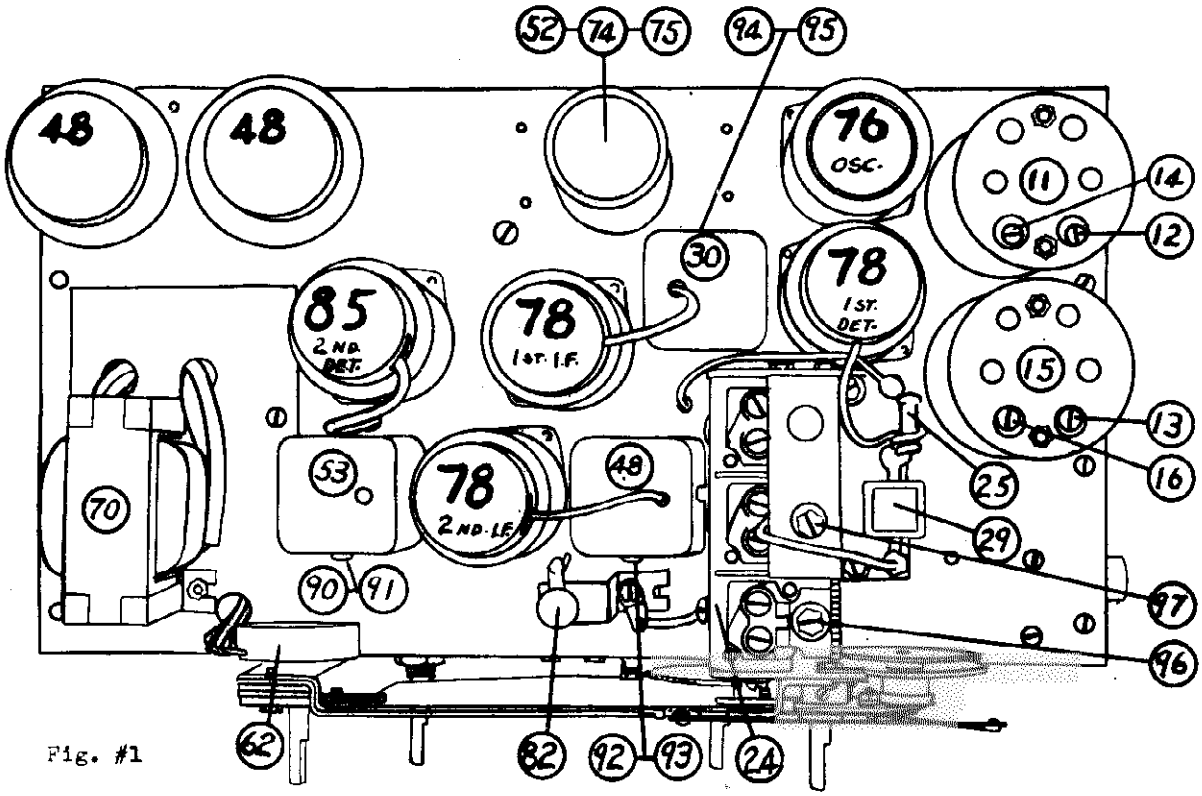

Fig. #1

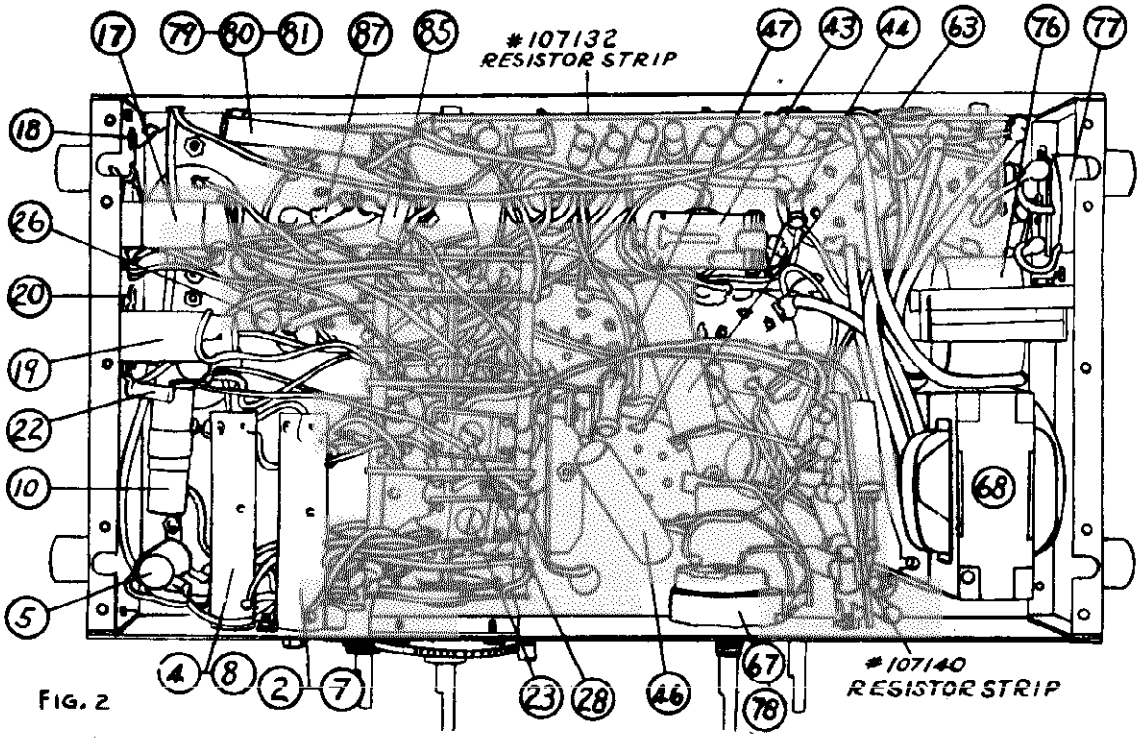

FIG. 2

ALIGNMENT NOMENCLATURE

#11 Broadcast oscillator coil
#12 Broadcast oscillator trimmer
#13 Green band oscillator trimmer
#14 Broadcast oscillator lag condenser
#15 Green band oscillator coil
#16 Green band oscillator lag. condenser
#18 Red band lag condenser (see Fig. #2)
#20 Purple band lag cond. (see Fig. #2)
#23-28 Purple band trimmers (see Fig. #2)
#90-91 Third I.F. trimmers
#92-93 Second I.F. trimmers
#94-95 First I.F. trimmers
#96 Broadcast antenna trimmer
#97 Broadcast preselector trimmer

SERVICE PARTS LIST

Model 462A - Table Model Model 462Y - DeLuxe Console

(110 Volt D. C. 7-tube All Wave Receiver)

Part #	Dia. #	Description of Parts
105688	1	Antenna coil (blue)
105686	2	Antenna coil (red)
103659	3	.005 mf. 350 V. condenser
105685	4	Antenna coil (green)
105690	5	Antenna coil (black)
	6	Ant. coil - part of 105688
	7	Ant. coil - part of 105686
	8	Ant. coil - part of 105685
102495	9	.05 mf. 200 V. condenser
105691	10	Antenna coil (black)
105684	11	Oscillator coil (black)
	12	7-70 mmf. condenser - part of 105684
	13	7-70 mmf. condenser - part of 105683
	14	300 mmf. variable condenser part of 105684
105683	15	Oscillator coil (green)
	16	1200 mmf. variable cond. - part of 105683
105689	17	Oscillator coil (red)
103800	18	2000 mmf. variable cond.
105687	19	Oscillator coil (blue)
103800	20	2000 mmf. var. condenser
105705	21	Trimmer condenser
105258	22	200 ohms ½ W. resistor
105705	23	Trimmer condenser
106352	24	Variable condenser
105246	25	.5 meg. ½ W. resistor
106386	26	.05 mf. 200 V. condenser
105267	27	1000 ohms ½ W. resistor
105705	28	Trimmer condenser
101143	29	.0001 mica condenser
105695	30	I.F. transformer
105257	31	1000 ohms ½ W. resistor
106386	32	.05 mf. 200 V. resistor
105254	33	15000 ohms ½ W. resistor
105272	34	10,000 ohms ½ W. resistor
105254	35	15,000 ohms ½ W. resistor
106386	36	.05 mf. 200 V. condenser
102495	37	.1 mf. 200 V. condenser
105263	38	600 ohms ½ W. resistor
106386	39	.05 mf. 200 V. condenser
105275	40	25,000 ohms ½ W. resistor
106386	41	.05 mf. 200 V. condenser
105267	42	1000 ohms ½ W. resistor
107129	43	Relay
107142	44	12 ohms ½ W. resistor
106386	45	.05 mf. 200 V. condenser
106386	46	.05 mf. 200 V. condenser
105262	47	450 ohms ½ W. resistor
105695	48	I.F. transformer
105267	49	1000 ohms ½ W. resistor
106386	50	.05 mf. 200 V. condenser
105245	51	2000 ohms ½ W. resistor
	52	4 mf. 125 V. condenser - part of 106968
107050	53	Diode transformer
105281	54	1 meg. ½ W. resistor
105276	55	50,000 ohms ½ W. resistor

Part #	Dia. #	Description of Parts
103659	56	.005 mf. 350 V. condenser
106417	57	.0001 mica condenser
105246	58	.5 meg. ½ W. resistor
105386	59	.05 mf. 200 V. condenser
105281	60	1 meg. ½ W. resistor
105281	61	1 meg. ½ W. resistor
105562	62	Volume control
102499	63	.5 mf. 200 V. condenser
105249	64	5000 ohms ½ W. resistor
106405	65	.001 500 V. condenser
102504	66	.02 mf. 350 V. condenser
105561	67	Tone control
100759	68	Input transformer
103659	69	.005 mf. 350 V. condenser
107190	70	Output transformer
103659	71	.005 mf. 350 V. condenser
107102	72	Speaker
102495	73	.05 mf. 200 V. condenser
	74	4 mf. 125 V. condenser - part of 106968
	75	8 mf. 125 V. condenser - part of 106968
104116	76	Choke coil
99947	77	Choke coil
	78	Switch - part of 105561
107130	79	26 ohms resistor
	80	160 ohms resistor
	81	80 ohms resistor
104916	82	Pilot light
102495	83	.05 mf. 200 V. condenser
102498	84	.05 mf. 200 V. condenser
101143	85	.0001 mica condenser
100814	86	50 ohms ½ W. resistor
105278	87	.1 meg. ½ W. resistor
106417	88	.0001 mica condenser

MAIN ASSEMBLIES

107078	Chassis assembly - Mdls 462A & Y
107721	Cabinet - Model 462A
106304	Cabinet - Model 462Y
107102	Speaker assembly - Model 462A
107942	Speaker assembly - Model 462Y

BRACKETS, CLIPS & CLAMPS

107115	Chassis mounting bracket- Mdl 462A
79381	Speaker cable clamp
105703	Insulation strip bracket on variable condenser
105358	Bracket with bearing on variable condenser assembly
105655	Dial scale indicator bracket
107321	Dial lamp bracket assembly
101785	Braaket for iron cored filter choke
105368	Dial scale clip
103601	Speaker diaphragm bracket

A - ALIGNING THE I.F. (456 K.C.)

1. Set test oscillator to 456 K.C.
2. Connect test oscillator to grid of 2nd I. F. tube and adjust #90 and #91 to maximum output, reducing test oscillator output as required.
3. Connect test oscillator to grid of 1st I. F. tube and adjust #92 and #93 to maximum output.
4. Connect test oscillator to grid of 1st detector and adjust #94 and #95 to maximum output.

B - R.F. ADJUSTMENT BROADCAST BAND

1. Set test oscillator to 1500 K.C. and connect to grid of first detector.
2. Set station indicator to 1.5 on dial scale.
3. Adjust #12 until signal is tuned in. This adjustment screw is usually color coded. Having obtained tune at this point, set test oscillator to 600 K.C. and tune station selector to .6 mark on dial.
4. Adjust #14 until signal is tuned in.
5. Return to 1500 K. C. setting with set and test oscillator, and readjust #12 to obtain accurate adjustment to scale reading.
6. Connect test oscillator to antenna lead of the chassis making sure that the equivalent (200 mmf.) is in the circuit.
7. Continue setting of 1500 K.C.
8. Adjust #96 and #97 for maximum output. Check sensitivity and calibration at several points on dial. Set should come correctly to kilocycle settings of important broadcast stations.

C - ALIGNING THE GREEN BAND

1. Set test oscillator to 3600 K.C. and station indicator to 3.6, and dial.
2. Adjust #13 until signal is tuned in. This adjustment screw is usually color coded.
3. Set test oscillator to 1600 K.C. and station indicator to 1.6 on dial.
4. Adjust #16 until signal is tuned in.
5. Return to 3600 K. C. setting and repeat adjustment of #13. In adjusting #13, it is possible to obtain two peaks. This denotes merely the plus and minus frequency between oscillator and test oscillator which will give the correct I.F. frequency. The correct setting of the trim condenser is the one wherein the screw is turned farthest out. In any event, an incorrect setting will always be denoted by lack of sensitivity when the set and test oscillator are tuned to 2500 K.C. (mid-band).

D - ALIGNING THE RED BAND

1. Set test oscillator to 8000 K. C. and tune receiver in region of 8.0 on dial. Note where signal is received.
2. Next, set test oscillator to 4000 K.C. and tune set to 4.0 on dial.
3. Adjust #18 on right side of chassis (see Figure #2) until signal is tuned in.
4. Retune set and test oscillator to 8000 K.C. and observe pointer setting and sensitivity. Slight deviations from calibration can be compensated by manipulating the stiff wires connecting the oscillator coil to switch.

E - ALIGNING THE PURPLE BAND

1. Set test oscillator to 20,000 K. C. or if this is not available, then adjust to highest possible frequency, which should at least be 15,000 K.C. Tune set to this frequency and note where signal is received on dial.
2. Then set test oscillator to 10,000 K.C. and station indicator to 10. on dial. Adjust #20 on right side of chassis (Fig. #2) until signal is tuned in at 10. on dial scale.
3. Now retune both test oscillator and set to highest frequency. Located underneath the chassis and mounted on the wave change switch are two trim condensers (see Figure #2) which are used for correct adjustment at this high frequency.
4. Increase output of test oscillator until signal can be tuned in at two points on dial (say 19. and 20.). Then with pointer set at 20., adjust #23 and #28 for maximum output, decreasing test signal as signal becomes better tuned. At correct adjustment a very loud signal will be obtained at 20. on the dial while a feeble signal or none at all will be observed at 19. This is a practical illustration of the effectiveness of preselection as outlined in the first part of this description.

The adjustment instructions just given apply to a Model 462 which is in reasonable operating condition, but in some manner has been thrown out of adjustment. Before the radio service man can go through with the adjustment just given here, he must assure himself that defective tubes, injured parts; such as punctured condensers, shorted variable condensers, open resistors, open by-pass condensers, scratched high frequency coils, etc., are not such as to cause the set to be inoperative on one or more bands of frequencies.

©John F. Rider. Publisher

MODEL 536
Schematic
Parts List

UNITED AMERICAN BOSCH CORP.

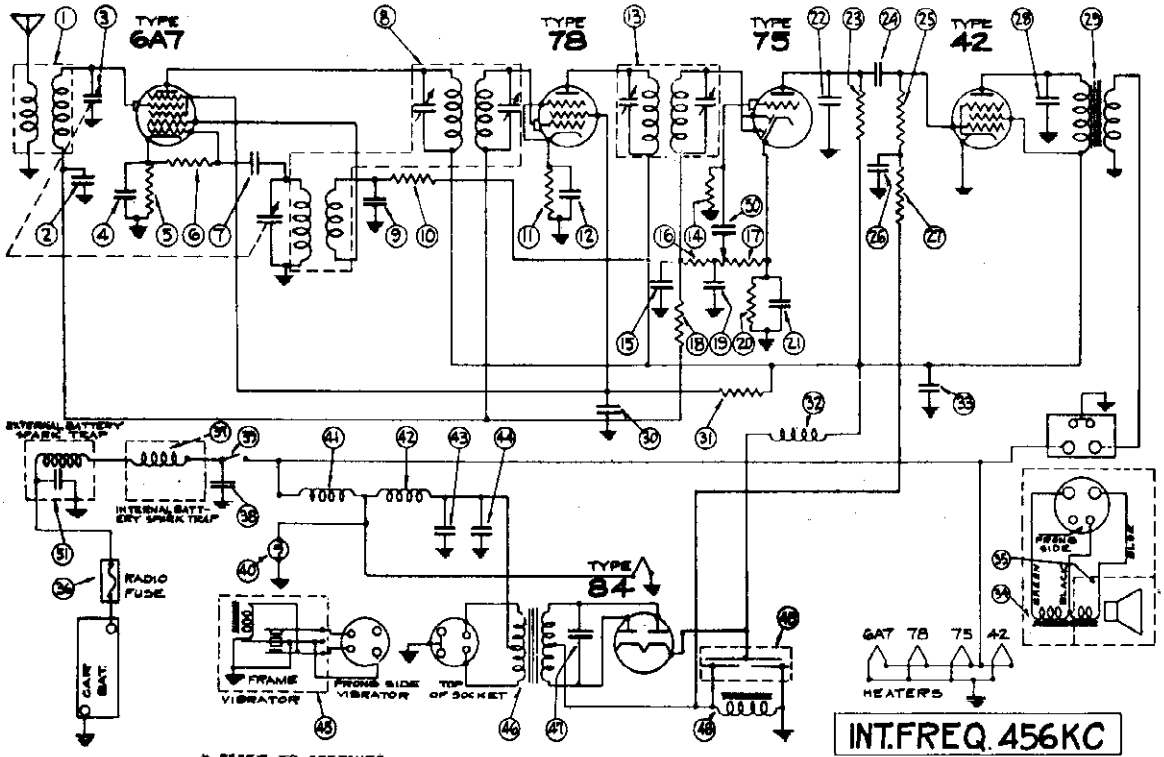

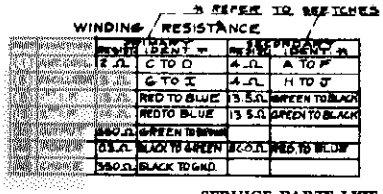

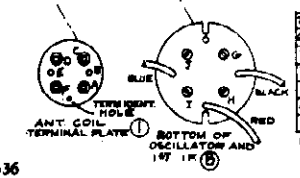

SOCKET VOLTAGE

TUBE	STAGE	FIL.	PLATE	CATH.	SCREEN	ANODE	
6A7	DET. OSC.	6.0	235	3.2	97.0	175	
78	I.F.	6.0	240.5	2.5	98.0		
75	2ND DET.	6.0	146.5	1.6			
84	RECTIFIER	6.0					
42	POWER	6.0	227.5		243		165

NOTE ALL VOLTAGE READINGS WITH A VOLTMETER HAVING A RESISTANCE OF 1000 Ω PER VOLT

SERVICE PARTS LIST MODEL 536

Dia. #	Part #	Description
1	RC 9525	Antenna coil assembly
2	SA 106386	.05 mfd. 200 V. cond.
3	CG 953	Condenser gang assy.
4	SA 106386	.05 mfd. 200 V. cond.
5	SA 105260	300 ohms ½ W. resistor
6	SA 105276	50,000 ohms ½ W. res.
7	CM 9513	.0001 mfd. mica cond.
8	RC 9526	Composite coil assy.
9	SA 102500	.01 mfd. 400 V. cond.
10	SA 105272	10,000 ohms ½ W. res.
11	SA 105255	200 ohms ½ W. res.
12	CW 951	.1 mfd. 200 V. cond.
13	IC 955	2nd I.F. coil assy.
14	SA 105281	1 meg. ½ W. resistor
15	CM 9513	.0001 mfd. mica cond.
16	SA 105276	50,000 ohms ½ W. res.
17	VR 951	Volume control - 50,000 ohms
18	SA 105246	.5 meg. ½ W. resistor
19	CM 9513	.0001 mfd. mica cond.
20	SA 105249	5,000 ohms ½ W. res.
21	SA 102497	.25 mfd. 200 V. cond.
22	SA 103552	.002 mfd. 600 V. cond.
23	SA 105278	100,000 ohms ½ W. res.
24	SA 103659	.005 mfd. 400 V. cond.
25	SA 105279	.25 meg. ½ W. resistor
26	CW 951	.1 mfd. 200 V. cond.
27	SA 105279	.25 meg. ½ W. resistor
28	CW 952	.008 mfd. 600 V. cond.
29	TR 952	Output transformer
30	SA 102492	.05 mfd. 400 V. cond.
31	SA 101471	18,000 ohms ½ W. res.
32	RC 9527	Choke coil
33	SA 102496	.25 mfd. 400 V. cond.
34	SK 951	Speaker
35	DM 951	Diaphragm & voice coil assembly
36	FU 951	Fuse - 20 ampere
37	RC 9512	Filter choke
38	CM 953	.00005 mfd. mica cond.
39		Switch - part of VR 951
40	LF 956	Dial light
41	SA 105452	Filter choke
42	SA 105452	Filter choke
43	CW 958	.5 mfd. 200 V. cond.
44	CW 958	.5 mfd. 200 V. cond.
45	VI 951	Vibrator
46	TR 953	Power transformer
47	SA 106804	.008 mfd. 1600 V. cond.
48	TR 951	B choke
49	CE 951	6-10 mfd. electrolytic condenser
50	SA 103659	.005 mfd. 400 V. cond.
51	GC 953	Spark trap

Part #	Description
	MAIN ASSEMBLIES
CH 954	Chassis assembly
CU 956	Control unit-less shafts
SK 951	Speaker assembly
	CABLE ASSEMBLIES
CB 951	Battery cable assembly
CB 958	Antenna cable assembly
	TUBE SOCKETS & TUBE SHIELDS
CV 954	Tube shield
SA 104617	Tube socket - 6 prong
SA 104618	Tube socket - 5 prong
SO 953	Tube socket - 4 prong
SA 105461	Tube socket - 7 prong
SA 107257	Speaker socket
	NUTS
MT 952	Thumb nut - assy. to drive shaft
MT 104936	Mounting nut
FP 106659	Thumb nut - cables to housing
MT 105059	Nut for volume control
	WASHERS, BUSHINGS & SPACERS
WA 104936	Mounting washer
WA 41033	Mounting lock washer
SR 955	Bushing spacer for mounting variable condenser
FP 104086	Spacer for speaker & spark trap
IS 1002	Variable cond. rubber mounting bushing
	SCREWS & STUDS
FP 104892	Cover-to-housing fastening thumb screw
FP 106571	Mounting stud
SC 1028CA	Self-tapping screw #6 x 1" long
SC 101700	Self-tapping screw #7 x ¼" long

Part #	Description
	SPEAKER PARTS
DM 951	Diaphragm assembly - complete
SC 106677	Diaphragm housing-to-frame fastening screw
CL 9513	Speaker field coil
SA 106492	Core-and-frame assembly
FP 106496	Plate for core & frame assy.
CS 9528	Speaker cable with 4 prong plug assembly
FA 958	Speaker silk grill
	MISCELLANEOUS
IP 954	Paper template
SK 951	Drive shafts - 2 used
KT 956	Spark plug suppressor kit
DS 9518	Dial scale
FP 107470	Control unit dial scale indicator
KN 958	Knob - volume control
KN 959	Knob - tuning
IS 106430	Insulation for battery cable fuse
SA 106764	Ignition-coil suppressor
SA 107182	Spark plug suppressor
SA 105500	Suppressor condenser
CV 95172	Cover-and-speaker assembly
HG 9590	Housing-and-chassis assy.
WN 952	Window-control head
RG 952	Dial glass rim
SK 955	Control unit mounting bracket
HF 951	Control unit mounting strap
SH 9510	Variable condenser shaft-and-pinion assembly
FP 79361	Battery & antenna cable to housing mounting clamp
	KITS

The following kits are available for adapting the control head furnished with this set to panel mounting:

KT 951	Under-dash mounting
KT 952	1934 Plymouth, Chrysler, Dodge
KT 953	1934 Ford
KT 954	1935 Plymouth, Chrysler, Dodge, Buppmobile
KT 955	1935 Ford

Type and Number of Tubes ---------- 1 #6A7, 1 #78, 1 #75, 1 #42, 1 #84 ; Total 5
Battery Current (6.3 Volt Battery) ---------- 6.5 Amperes
Tuning Range ---------- 540 to 1500 K.C.
Undistorted Output ---------- 3.0 Watts
Maximum Output ---------- 4.0 Watts
Line-up Frequencies ---------- I.F. 456 K.C., 1500 K.C.

©John F. Rider, Publisher

MODEL 536
Socket,Trimmers
Chassis,Alignment
Vibrator Data,Notes

UNITED AMERICAN BOSCH CORP.

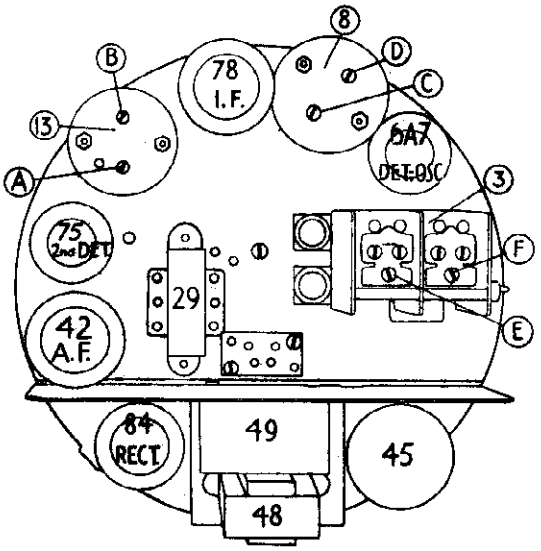

Figure No. 2

GENERAL DESCRIPTION

The Model 536 Car Radio has been designed, manufactured and tested with special regard for the requirements of automobile radio. The electrical, mechanical and acoustical features of the set have been decided upon after extensive tests in automobiles to determine the proper requirements for satisfaction. This Car Radio is a single unit compact radio chassis, power pack, and speaker with a separate remote control. The set is contained in a cylindrical housing and is provided with many features which result in improved tone quality, attractive appearance, mechanical stability and desirable service features.

CIRCUIT DESCRIPTION

The circuit is of the superheterodyne type employing five tubes as follows: A type 6A7 as a combined first detector-oscillator, a type 78 as an intermediate frequency amplifier, a type 75 as a combination second detector-A.V.C.-and first audio amplifier, a type 42 as an output tube and a type 84 as a rectifier in the power supply.

As the Model 536 is equipped with both an external spark trap (connected in the battery cable) and an internal, tuned spark trap, the use of spark-plug suppressors is unnecessary in many installations.

SERVICE DATA

COMMON TROUBLES THAT CAN BE EASILY LOCATED AND REMEDIED WITHOUT REMOVING RECEIVER FROM CAR OR FROM ITS MOUNTING

DIAL LIGHT DOES NOT LIGHT

Dial light may be loose in socket, broken or burned out.

Socket on end of lead in rear of control head pulls straight out.

SET INOPERATIVE AND TUBES DO NOT LIGHT

Check fuse in container on receiver antenna lead. Remove speaker cover and disconnect speaker plug. Remove vibrator, all tubes and disconnect dial-light cable from set. Check with ohmmeter from "Hot A" side of battery cable (male bayonet connector inside the fuse-container housing) to ground. Should ohmmeter show an open circuit when line switch is closed, obviously a tube or the vibrator is shorted and these parts can be checked separately to determine which is defective. On the other hand, if ohmmeter shows a short circuit, the chassis should be removed from its housing and checked.

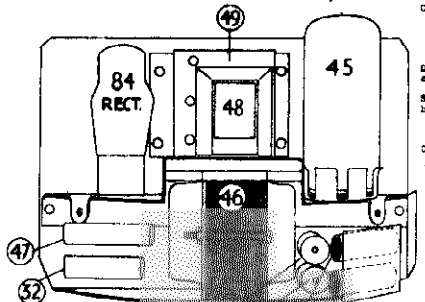

Figure No. 3

INSENSITIVE OR WEAK

Check car antenna for poor connections and grounds. Also check tubes and the receiver alignment.

INTERMITTENT RECEPTION

This is usually caused by a poor connection from the set antenna lead to the car antenna lead-in, and this point should always be checked when intermittent reception occurs.

MICROPHONIC OR INTERMITTENT

Tap each tube lightly with a small piece of wood or an insulated screw driver handle. The offending tube, when tapped, will usually howl very loudly if microphonic, or will give intermittent results if defective.

LOW POWER OUTPUT

Check tubes and vibrator. Usually caused by the latter.

RECEPTION CUTS OFF AT CERTAIN SETTINGS OF DIAL-SCALE POINTER

Usually caused by some foreign metallic substance shorting a section of the condenser gang. These particles are often too small to be seen but can be removed by blowing them out with an air pressure hose or an ordinary hand pump. Great care must be exercised not to destroy the thin mica insulators assembled under the trimmers on top of condenser gang.

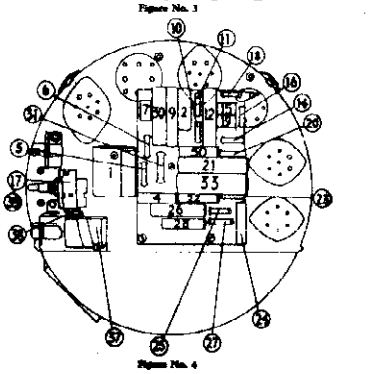

Figure No. 4

POOR TONE QUALITY

Foreign material is apt to become lodged between the speaker voice coil and the field core. This hampers the movement of the speaker diaphragm. As the rear of the speaker diaphragm is open, this space can be blown out clean with an air hose.

HUMMING SOUND IN SPEAKER

This can be remedied in many cases by the method described above. It can also be caused by a loose winding on the voice coil, in which case the turns of this winding should be pushed together, and a thin coat of collodion or coil cement should be applied to hold the windings in place.

RATTLES

Check receiver for loose cover thumb screws, tube shield, and housing screws. Rattles, seemingly in the radio receiver, are often traced to loose parts on the bulkhead or dashboard of the car.

SET INOPERATIVE TUBES LIGHT AND VIBRATOR BUZZES

1. Check B voltage (approximately 240 volts) from middle terminal of electrolytic filter condenser #49 to ground. This point is easily reached with the speaker cover removed. If no voltage or low voltage is obtained, test the vibrator and 84 tube. If voltage is still incorrect, the receiver should be removed from its housing for further checking.

2. With the speaker plugged in, remove the clip from the grid of the 75 tube and touch the clip to the grid cap of the tube several times in succession. A clicking noise should be heard in the speaker. This is a practical test for the audio amplifier and speaker. If this clicking noise is not heard, the 75 and 42 tubes should be tested and the voltages checked at the plates of these tubes. The speaker should be also checked with an ohmmeter by testing across the prongs of the speaker plug for continuity. While making this test, the cable should be moved back and forth to show up any possible intermittent open circuit in the speaker cable. Check the voice coil and the field coil for continuity.

If the audio and speaker are still dead, the chassis should be removed from its housing.

If the audio and speaker are working correctly, test the remaining tubes and check the voltages at each socket.

In the event that the chassis has to be removed from the car for repairs, this can easily be done as follows:

Disconnect all chassis cables and the flexible control shafts from the receiver. Remove the speaker cover and pull out the speaker plug. Remove the screws around the outside of the housing and pull the chassis straight out. The chassis can be removed in many cases in this manner without unbolting the chassis housing from the car.

LOCATING TROUBLE IN CHASSIS

To locate a shorted, open, or defective unit, causing low or no B voltage, disconnect the power pack from the receiver section by unsoldering the red lead (coming from coil #58, Fig. 3) from the terminal at the end of resistor #63, Fig. 4. Check the voltage at the free end of this Red lead (should be approximately 250 volts.) If the voltage is incorrect, the trouble is definitely in the power pack and all component parts should [illegible] be checked.

Conversely, if the voltage reading proves to be correct, the trouble is in the receiver section and all parts should be checked. In locating a short or open in the filament circuit, the power pack can be disconnected from the filament supply of the receiver section by removing the red wire on the top terminal [illegible] "off" and "on" switch which is [illegible] 42 tube. This will [illegible] power pack is the filament [illegible] short or open is [illegible] that the trouble [illegible] vision.

WEAK OR INSENSITIVE AFTER REALIGNMENT

Check coils and associated circuits in the deficient "stage" of the set for proper resistance values.

LOW POWER OUTPUT WITH B VOLTAGE CORRECT

Check speaker field coil, voice coil and associated audio circuit for resistance continuity and defective condensers. All riveted component parts can be removed by merely punching out the rivets with a small diameter straight side punch. Replacement parts can be secured with small machine screws and nuts.

In changing the power transformer, it is necessary only to remove the four drive screws, two located directly over the rectifier and condenser strip, and the other two in back of the condenser gang on the power pack shield. In replacing the power transformer be sure to tighten the screws securely and replace the shield braid bond or vibrator noise will be present.

INSTRUCTIONS FOR ADJUSTING VIBRATOR

After the vibrator has been in use for some time, it may refuse to start operating. This is an indication of "worn" tungsten contact points, but, as a reserve supply of tungsten has been provided, a simple adjustment can be made to prolong the life of the vibrator.

1. Remove the vibrator unit from its housing by removing the tension spring with a pair of round-nose pliers.

2. Remove the rubber sock, being careful not to bend the wires at the soldered connection.

3. Lay the vibrator on a piece of white paper so that when viewed from above it appears exactly as shown in Fig. 1.

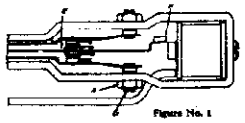

Figure No. 1

4. Loosen lock nut A [illegible] clockwise until .006" [illegible] between contacts C and [illegible] points are somewhat [illegible] not be seen across the [illegible] even though they are [illegible] that is, within .005" of touching each other.

5. A simple check on the correctness of the spacing adjustment is obtained by pressing lightly against the center of the reed with a small nail in the direction and location shown by arrow E. When the reed is thus moved so as to close contacts C and D, the weight F on the free end of the reed should move 1/64" from its "at rest" position. This check should be made [illegible] but A has been firmly re-

[illegible] readjust the spacing between contacts C and H unless the tungsten is nearly all worn away. In this case, readjustment may be made in the same manner as for contacts C and D.

7. In re-inserting the vibrator into its rubber sock, be very careful to turn the "flats" of the sock hole so that they are parallel to the flat side of the vibrator frame. This provides ample space in the sock for the free movement of the reed. Make certain that the slot in the prong terminal plate engages the small projection on the inside edge of the housing. Then replace the tension spring. THESE INSTRUCTIONS DO NOT APPLY TO ANY OTHER TYPE OF VIBRATORS.

LINE-UP CAPACITOR ADJUSTMENTS

All the adjustable capacitors, commonly called trimmer condensers, are very accurately adjusted at the factory and will not need any further adjustment unless a coil or I.F. transformer is changed, or the adjustments tampered with in the field. Therefore, DO NOT attempt to change the setting of any of the trimmer condensers unless it is definitely known that adjustment is necessary and a high grade modulated oscillator is available. In such a case, proceed as follows, referring to Fig. #2:

1. Set test oscillator to 456 K.C.

2. Set condenser gang to approximately 600 K.C. This will be at a point where the condenser plates are nearly all in mesh.

3. Connect output meter across voice coil of speaker. This may be done by connecting one lead of the output meter to the blue lead of the speaker terminal strip and the other lead to any metal part of the chassis. (The impedance of the voice coil is 3.0 ohms.)

4. Apply test signal to grid of 78 I.F. tube through a .5 mfd. blocking condenser and adjust trimmers A and B to maximum output reducing output of test oscillator as required.

5. Apply test signal to grid of 6A7 detector-oscillator tube and adjust trimmers C and D to maximum output.

6. Set test oscillator to 1500 K.C. and turn condenser gang until the rotor plates are wide open. Then place a piece of thin paper (approximately .015 thick) between the rotor and stator at the bottom of the gang, and then close the rotor down to this spacing. This is the exact setting of the condenser gang for the receiver oscillator at 1500 K.C. and should be carefully set as the resultant alignment of the receiver is directly dependent upon it.

7. Adjust trimmer E to maximum output and then remove the paper gauge.

8. Set test oscillator and condenser gang to 1400 K.C.

9. Apply test signal to antenna lead through a .0005 mfd. condenser and adjust trimmer F to maximum output. This completes the adjustment of the receiver.

©John F. Rider, Publisher

MODELS 565K, 565W
Schematic, Voltage
Parts List

UNITED AMERICAN BOSCH CORP.

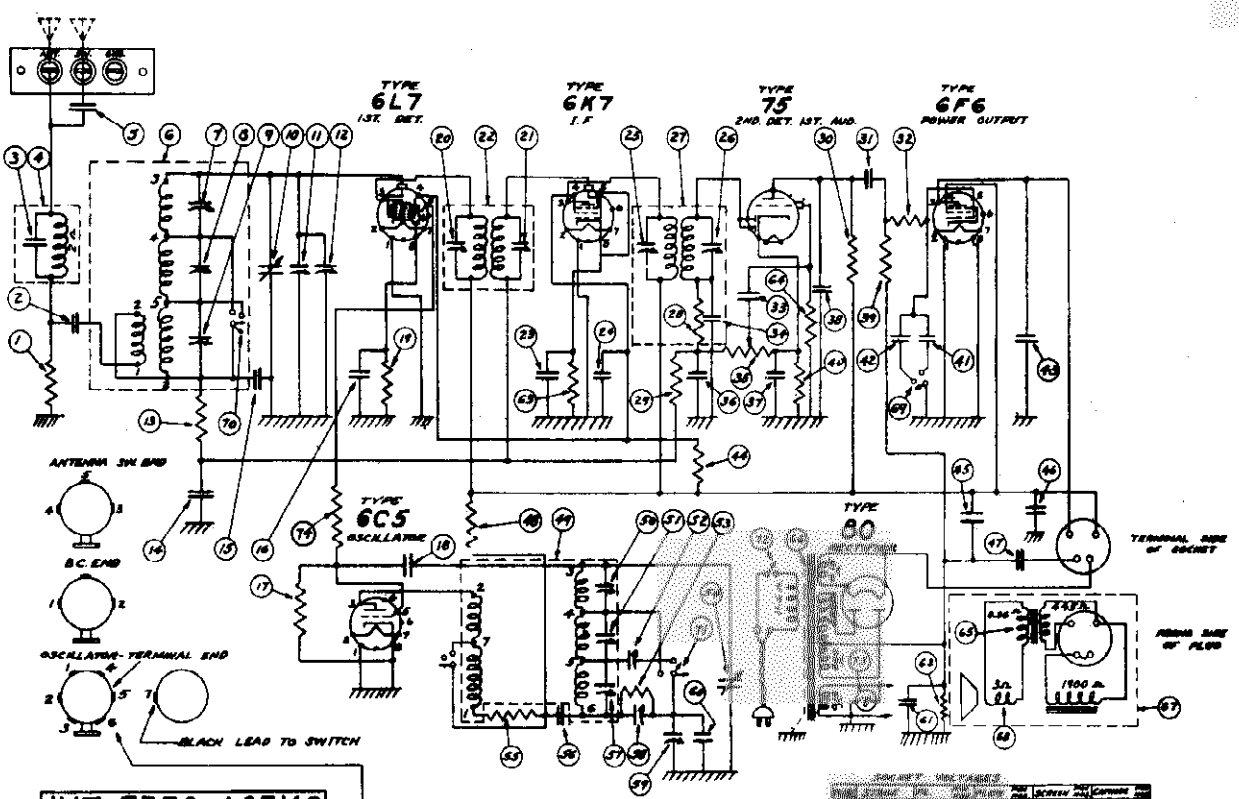

WAVE CHANGE SWITCH SHOWN ON BROADCAST OR CLOCKWISE POSITION. - TONE CONTROL SWITCH ON TREBLE OR COUNTER-CLOCKWISE POSITION.

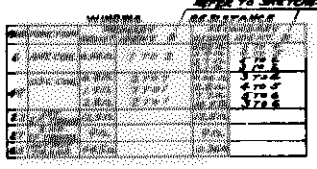

NOTE:- ALL VOLTAGES MEASURED TO FRAME WITH 1000 OHMS PER VOLT METER.
LINE VOLTAGE - 115 V

SERVICE PARTS LIST MODEL 565W

Dia. #	Part #	Description
1	RE 9549	10,000 ohm, ½ watt res.
2	CW 9512	.05 mfd., 400 V. cond.
3		.002 mfd. mica condenser - part of RC 98102
4	RC 98102	Trap coil assembly
5	SA 106417	.0001 mfd. mica cond.
6	RC 9585	Antenna coil assembly
7		3-30 mmf. trimmer cond. - part of RC 9563 A
8		3-30 mmf. trimmer cond. - part of RC 9563 A
9		3-30 mmf. trimmer cond. - part of RC 9563 A
10		Variable condenser - part of CG 9580
11		Trimmer condenser - part of CG 9580
12		Trimmer condenser - part of CG 9580
13	RM 9554	100,000 ohm, ½ watt res.
14	SA 106586	.05 mfd., 200 V. cond.
15	SA 107801	.0025 mfd. mica cond.
16	SA 106586	.05 mfd., 200 V. cond.
17	RE 9456	90,000 ohm, ½ watt res.
18	SA 106417	.0001 mfd. mica cond.
19	RE 9681	750 ohm, ½ watt resistor
20		30-100 mmf. trimmer cond. - part of IC 9546
21		30-100 mmf. trimmer cond. - part of IC 9546
22	IC 9546	1st I.F. coil assembly
23	SA 106586	.05 mfd., 200 V. cond.
24	SA 102495	.1 mfd., 200 V. cond.
25		(35-102 mmf. trimmer cond.
26	IC 9547	(35-100 mmf. trimmer cond.
27		(2nd I.F. coil assembly
28		50,000 ohm, ½ watt res. - part of IC 9547
29	RE 9550	1 megohm, ½ watt res.
30	RE 9631	850,000 ohm, ½ watt res.
31	CW 9512	.02 mfd., 400 V. cond.
32	RE 9531	250,000 ohm, ½ watt res.
33	SA 106586	.05 mfd., 200 V. cond.
34		.0001 mfd. mica cond. - part of IC 9547
35	VR 9517	Volume control & switch (500,000 ohms)
36	SA 106-[illegible]	.0001 mfd. mica cond.
37	SA 1094w9	.5 mfd., 200 V. cond.
38	SA 106417	.0001 mfd. mica cond.
39	RE 9531	250,000 ohm, ½ watt res.
40	RE 9527	5000 ohm resistor
41	SA 106403	.001 mfd. 600 V. cond.
42	CM 954	.0035 mfd. mica cond.
43	CW 952	.005 mfd., 600 V. cond.
44	SA 101404	15,000 ohm, 1 watt res.
45	CE 9511	8 mfd., 300 V. electrolytic condenser
46	SA 102494	.1 mfd., 400 V. cond.
47	CE 9512	12 mfd., 450 V. electrolytic condenser
48	SA 101404	15,000 ohm, 1 watt res.
49	RC 9570	Oscillator coil assembly
50		3-30 mmf. trimmer cond. - part of RC 9570
51		3-30 mmf. trimmer cond. - part of RC 9570
52	CS 9513	750-1750 mmf. trimmer condenser
53	RE 9550	2000 ohm ½ watt resistor
54		Variable condenser - part of CG 9580
55	RE 9589	500 ohm, ½ watt resistor
56	CW 9512	.02 mfd., 400 V. cond.
57		3-30 mmf. trimmer cond. - part of RC 9570
58		500-600 mmf. trimmer condenser - part of SA 108001
59		1100-2000 mmf. trimmer condenser - part of SA 108001
60	SA 105775	.001 mfd. mica condenser
61	CE 958	10 mfd., 25 V. electrolytic condenser
62	SA 102564	350 ohm, 1 watt resistor
63	RE 9530	500 ohm, ½ watt resistor
64	RE 9550	1 megohm, ½ watt res.
65	SA 108025	Speaker output transformer
66	TR 9512	Power transformer
67	SA 108024	Speaker assy. complete
68	SA 106617	Diaphragm & voice coil assembly
69	SW 9515	Tone control switch
70		Wave change switch - part of SW 9514
71		Wave change switch - part of SW 9514
72		On-Off switch - part of VR 9515
73	SA 106809	Dial lights (6.3 volts) - 3 used
74	RE 9530	500 ohm, ½ watt res.

Part #	Description
MAIN ASSEMBLIES	
CE 9531	Chassis assembly
SA 108024	Speaker assembly, complete
KA 9535	Cabinet
CABLES & CABLE ASSEMBLIES	
CB 9512	Line cable with plug assembly
PR 98511	Cable dial drive (9 inches)
SPEAKER PARTS	
SA 106617	Diaphragm and voice coil assy.
SA 108025	Speaker output transformer
FP 106496	Steel plate
SA 107165	Speaker field coil
SA 107559	Core and frame assembly
SA 101856	Insulation plate assembly
SA 107273	Copper ring assembly
SC 106677	Diaphragm housing to core plate fastening screw
SA 107279	Cover for speaker plug
SA 107278	Speaker plug

MODEL 565K

Service parts for the Model 565-K are the same as those for the Model 565-W, except for the following parts:

Dia. #	Part #	Description
65	TR 9515	Speaker output transformer
67	SK 9513	Speaker assy. complete
68	SA 102883	Diaphragm and voice coil assembly

Part #	Description
MAIN ASSEMBLIES	
SK 9515	Speaker assembly complete
KA 9537	Cabinet assembly
SPEAKER PARTS	
SA 102883	Diaphragm and voice coil assy.
FP 102870	Steel plate
FP 101742	Cardboard washer
CL 9537	Speaker field coil
SA 101733	Core and frame assembly
SC 102132	Core and frame fastening screw
TR 9515	Speaker output transformer
SA 107278	Speaker plug
SA 107279	Speaker plug cover
FP 101740	Copper ring
FP 102155	Cardboard baffle ring

ELECTRICAL SPECIFICATIONS

Type and Number of Tubes ---------- 1 #6L7, 1 #6C5, 1 #6K7, 1 #75, 1 #6F6, 1 #80 - Total 6
Power Supply ---------- 105 to 125 volts, 50 to 60 cycles
Power Consumption ---------- 55 Watts
Maximum Undistorted Output ---------- 2.5 Watts
Maximum Output ---------- 3.5 Watts
Tuning Ranges ---------- White Band 540 to 1540 K.C.
Green Band 1540 to 5800 K.C.
Red Band 5800 to 18,000 K.C.
Line-Up Frequencies ---------- I.F. 465 K.C., 18,000 K.C., 9000 K.C., 4000 K.C., 1800 K.C., 1600 K.C., 560 K.C.

©John F. Rider, Publisher

MODELS 565K, 565W
Socket, Trimmers
Chassis, Alignment

UNITED AMERICAN BOSCH CORP.

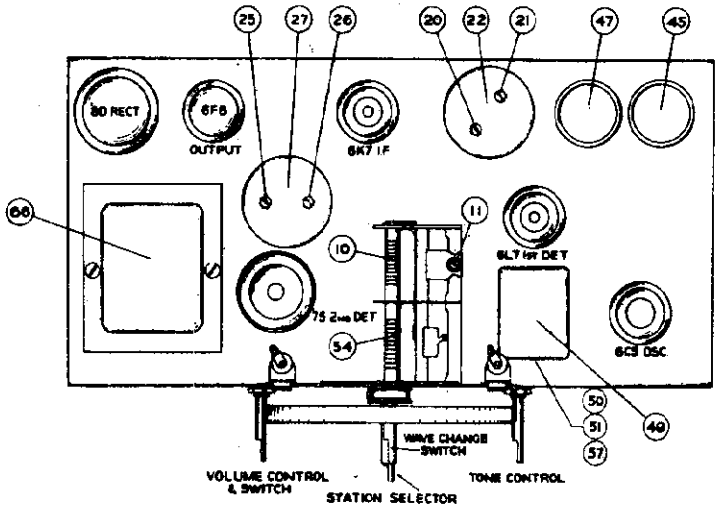

Figure No. 1

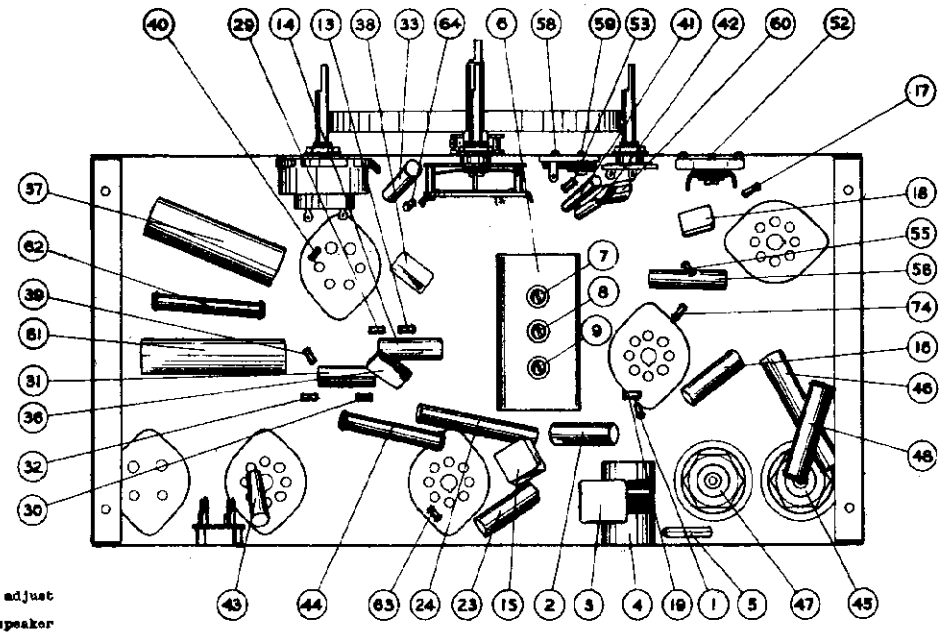

Figure No. 2

GENERAL DESCRIPTION

The Model 565 is a six-tube, three-band superheterodyne receiver, designed for world-wide reception and employing the new all-metal tubes.

The circuit of the chassis employs a type 6L7 as a first detector, a type 6C5 as a separate oscillator or mixer tube, a type 6K7 as an intermediate frequency amplifier, a type 75 as a combination second detector, A.V.C. and first audio amplifier, a type 6F6 pentode power amplifier and a type 80 rectifier with its associated filter system.

LINE-UP CAPACITOR ADJUSTMENTS

To align the circuits of this receiver, it is essential to use a high-grade modulated test oscillator, the output of which can be continuously varied and reduced sufficiently to prevent the action of the A.V.C. of the receiver from occuring when the individual circuits are brought into alignment. A conventional output meter can be connected across the terminals of the speaker voice coil to indicate when the circuits are correctly aligned. The sensitivity of this meter must be sufficient to give satisfactory reading with a low input signal.

Before attempting to align the receiver, the service man should familiarize himself with the general layout of the chassis, location of the tubes and various alignment condensers. Top and bottom views are shown in Figures #1 and #2 and should be carefully studied before the actual work is started.

ADJUSTMENT OF I.F. (465 K.C.)

1. Set volume control on full and adjust tone control to center position.
2. Connect output meter across speaker voice coil terminals.
3. Set test oscillator to 465 K.C. and adjust its output to produce a measurable reading on the output meter when the test signal is applied to the grid of the 6K7 I.F. tube thru a .5 mfd. blocking condenser.
4. Adjust trimmers #25 and #26 to maximum output.
5. Apply test signal to grid of 6L7 first detector tube and adjust trimmers #20 and #21 to maximum output.

ADJUSTMENT OF RED BAND

NOTE: Before proceeding with the following adjustments, it is important that trimmer #11 located on top of the condenser gang, be carefully adjusted. This trimmer has been correctly adjusted prior to its shipment at the factory and no further adjustment should be necessary, unless it has been tampered with. In this event, turn the adjustment screw of this trimmer to maximum capacity (screw turned to extreme clockwise position—all the way in), then turn screw about a half-turn in a counter-clockwise direction.

1. Set wave change switch to the red-band position (lower center control turned to its extreme left-hand setting).
2. Set dial indicator and test oscillator to 16,000 K.C. and apply test signal to the "A" and "G" terminals of the chassis thru a .0002 mfd. condenser and a 400 ohm resistor in series. This condenser-resistor combination is the approximate equivalent of a short-wave antenna.
3. Adjust trimmer #50 to maximum output.

NOTE: When adjusting the oscillator trimming condensers, it is possible to obtain two different peaks. Correct adjustment is obtained by trimming to the second peak from maximum capacity of the trim condenser. Adjustment to the wrong peak will result in a lack of sensitivity and poor calibration at mid-band positions.

4. Adjust trimmer #7 by the "max-max" method. This is accomplished as follows: With dial indicator and test oscillator still set at 16,000 K.C., adjust trimmer #7 to maximum output and note reading of the output meter. Then, change the setting of #7 trimmer slightly in either direction and then without changing trimmer screw, tune receiver by means of tuning knob thru a maximum and note reading of output meter. If second reading is lower, reverse the direction of the adjustment of #7 trimmer. Proceed with this adjustment in progressive steps, each time tuning receiver thru a maximum, until no further improvement can be obtained by tuning receiver, the #7 trimmer screw, or both together. Although this procedure may at first appear a bit complicated, facility is easily acquired with practice; and after a few trials the operation can be completed in a few minutes.
5. Set dial indicator and test oscillator to 8000 K.C. and "max-max" the lagging condenser #69 to maximum output.

ADJUSTMENT OF GREEN BAND

1. Set wave-change switch to the green-band position (middle setting).
2. Set dial indicator and test oscillator to 4000 K.C. and adjust trimmers #51 and #8 to maximum output.
3. Set dial indicator and test oscillator to 1800 K.C. and "max-max" lagging condenser #52 to maximum output.

ADJUSTMENT OF WHITE BAND

1. Set wave-change switch to the white or broadcast-band position (right-hand setting).
2. Set dial indicator and test oscillator to 1400 K.C. and adjust trimmers #57 and #9 to maximum output.
3. Set dial indicator and test oscillator to 560 K.C. and "max-max" lagging condenser #58 to maximum output.

©John F. Rider, Publisher

MODELS 575F, 575Z

UNITED AMERICAN BOSCH CORP. Socket, Trimmer & Alignment

AMERICAN-BOSCH Centr-O-matic RADIO MODEL 575

Seven-Tube, Three Band, Superheterodyne Receiver

SERVICE NOTES

ELECTRICAL SPECIFICATIONS

Type and Number of Tubes -------- 2 #6K7, 1 #6A8, 1 #6H6, 1 #6F5, 1 #6F6, 1 #80-Total 7
Power Supply ---------- 105 to 125 volts, 50 to 60 cycles A.C.
Power Consumption ---------- 60 Watts
Maximum Undistorted Output ---------- 2.5 Watts
Maximum Output ---------- 3.3 Watts
Tuning Ranges ---------- (Black Band 540 to 1500 K.C.
(Green Band 1500 to 6000 K.C.
(Red Band 6000 to 18300 K.C.
Line-up Frequencies-I.F.455K.C.,1500K.C.,570K.C.,5500K.C.,1900K.C.,17000K.C.& 6000 K.C.

GENERAL DESCRIPTION

This model is a seven-tube, three-band superheterodyne receiver designed for world wide reception and employs the new all-metal tubes.

The circuit employs a high frequency amplifier using the new type 6K7 tube. This is followed by a combined first detector-oscillator circuit employing a 6A8 tube. These tubes with their associated circuits, (coils, variable condensers, trim condensers for R.F. and detector stages, and trim and lag condensers for the oscillators) comprise a complete assembly in compact form separately cushioned from the main chassis. This assembly is known as the "Centr-O-matic" unit. From the high frequency assembly the energy passes thru an I.F. selective trans/former and to an I.F. amplifier tube (type 6K7). From here further selection takes place and the energy is sent to the diode (type 6H6) where second detection takes place and voltages are provided for automatic volume control. A first audio amplifier tube (type 6F5) follows the diode and this is further followed by a pentode power amplifier tube (type 6F6). A type 80 rectifier supplies the direct current for energizing the tubes.

REMOVING INDIVIDUAL COIL AND SWITCH SECTIONS OF CENTR-O-MATIC UNIT

If a component part located underneath the switch and coil assemblies of the "Centr-O-matic" unit has to be replaced or a section of the unit has to be removed for inspection, each section can easily be removed separately. To do this proceed with care as follows:

1. Remove the three coil shields.
2. Remove the two self-tapping screws which fasten the mounting plate of the wave-change switch shaft to the chassis. Pull switch shaft out straight.
3. Unsolder the stator and rotor leads from the gang condenser.
4. The fastening screws for the switch sections are located on top of the "Centr-O-matic" unit and are indicated by X,Y and Z in figure #2. Remove the corresponding screw.
5. Each individual section can then be pulled out straight.

NOTE: On the R.F. section the plate lead from the 6K7 socket will have to be unsoldered from the socket before the section can be removed. On the oscillator section one blue lead from the 6A8 detector-oscillator socket will have to be unsoldered at the switch terminal.

6. After repairs have been made resolder the leads mentioned above and replace the section being careful to observe that the slotted holes in the switch bracket line up with the round guide pins on the base plate of the "Centr-O-matic" unit. This is IMPORTANT as the switch shaft cannot be inserted if the switch brackets do not line up.
7. Replace the section fastening screw.
8. Resolder the stator and rotor leads to the gang condenser.
9. Replace the switch shaft and the mounting plate fastening screws. When inserting the switch shaft, be careful that all the switch discs are in the same position, otherwise the switch shaft will not slide in. NEVER force the shaft into the switch discs. If shaft does not slide in freely, examine the position of the slots in each switch disc.
10. Before replacing the coil shields, it might be advisable to bend the shields slightly to assure that positive contact is made. To do this hold the shield with your two hands using the thumbs and the first two fingers as shown in figure #1. Pull out the ends of the shields slightly and at the same time apply a little pressure on the sides of the shield as indicated by the arrows in the drawing. Then replace the shields and observe that they fit tightly. In addition to assuring positive contacts, this will also prevent the shields from rattling.

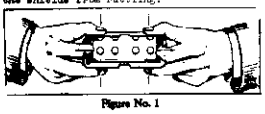

Figure No. 1

LINE-UP CAPACITOR ADJUSTMENTS

To align the circuits of this receiver it is essential to use a high grade modulated test oscillator, the output of which can be continuously varied with absence from overload when the individual circuits of the receiver are brought into alignment. A conventional output meter can be connected across the terminals of the speaker voice coil to indicate when the circuits are aligned. The sensitivity of the output meter must be sufficient to give satisfactory reading with a low input signal. Before attempting to align the receiver, the service man should familiarize himself with the general layout of the chassis, the location of the tubes and various alignment condensers. Top and bottom views of the chassis are shown in figures #2, #3 and #4 and should be carefully studied before the actual work is started.

ADJUSTMENT OF I.F. (455 K.C.)

1. Set volume control on full and turn tone control to the bass position.
2. Connect output meter across voice coil of speaker.
3. Set test oscillator to 455 K.C. and adjust its output to produce a measurable reading on output meter when test signal is applied to the grid of the 6K7 I.F. tube through a .1 mfd. blocking condenser.
4. Adjust trimmer #52 for maximum output, reducing output of test oscillator as required.
5. Apply test signal to grid of 6A8 detector-oscillator and adjust #44 and #46 for maximum output.

ADJUSTMENT OF BROADCAST BAND

1. Set wave-change switch to the Black or Broadcast Band position.
2. Set test oscillator and dial indicator to 1500 K.C.
3. Apply test signal to antenna terminal of chassis through a .0005 mfd. series condenser and adjust #31, #19 and #6 for maximum output.
4. Set test oscillator and dial indicator to 570 K.C. and adjust #37 for maximum output.
5. Return to 1500 K.C. setting with both test oscillator and dial indicator and readjust #31, #19 and #6 for accuracy.

ADJUSTMENT OF GREEN BAND

NOTE: In adjusting the two short-wave bands (Green and Red) a .0005 mfd. condenser and a 400 ohm resistor connected in series should be inserted in the high side of the test oscillator lead. This condenser-resistor combination is the approximate equivalent of a short wave antenna.

1. Set wave change switch to the Green Band position.
2. Set test oscillator and dial indicator to 5500 K.C. and adjust #30, #18 and #7 for maximum output.
3. Set test oscillator and dial indicator to 1900 K.C. and adjust #36 for maximum output.
4. Return to 5500 K.C. setting and make readjustment of #30, #18 and #7.

ADJUSTMENT OF RED BAND

1. Set wave change switch to the Red Band position.
2. Set test oscillator and dial indicator to 17000 K.C. and adjust #29, #17 and #6 for maximum output.
3. Set test oscillator and dial indicator to 6000 K.C. and adjust #35 for maximum output.
4. Return to 17000 K.C. setting and make readjustment of #29, #17 and #6.

NOTE: The adjustment of the two short-wave oscillator lag condensers (#38 and #36) is best made by the max-max. method.

This is done as follows:

Tune the receiver with the left hand by means of the tuning knob and adjust the lag condenser in either direction and then without changing it, tune the receiver for a maximum, noting reading on the output meter. Change the lag condenser further in the same direction, retune receiver and note reading. If the output drops with the second adjustment, reverse direction of the adjustment of lag condenser. Continue this type of trial and error adjustment until no further improvement can be made when either the tuning control or the lagging condenser are changed. While this procedure may appear to be difficult, facility can easily be acquired by practise and the operation requires only a few minutes.

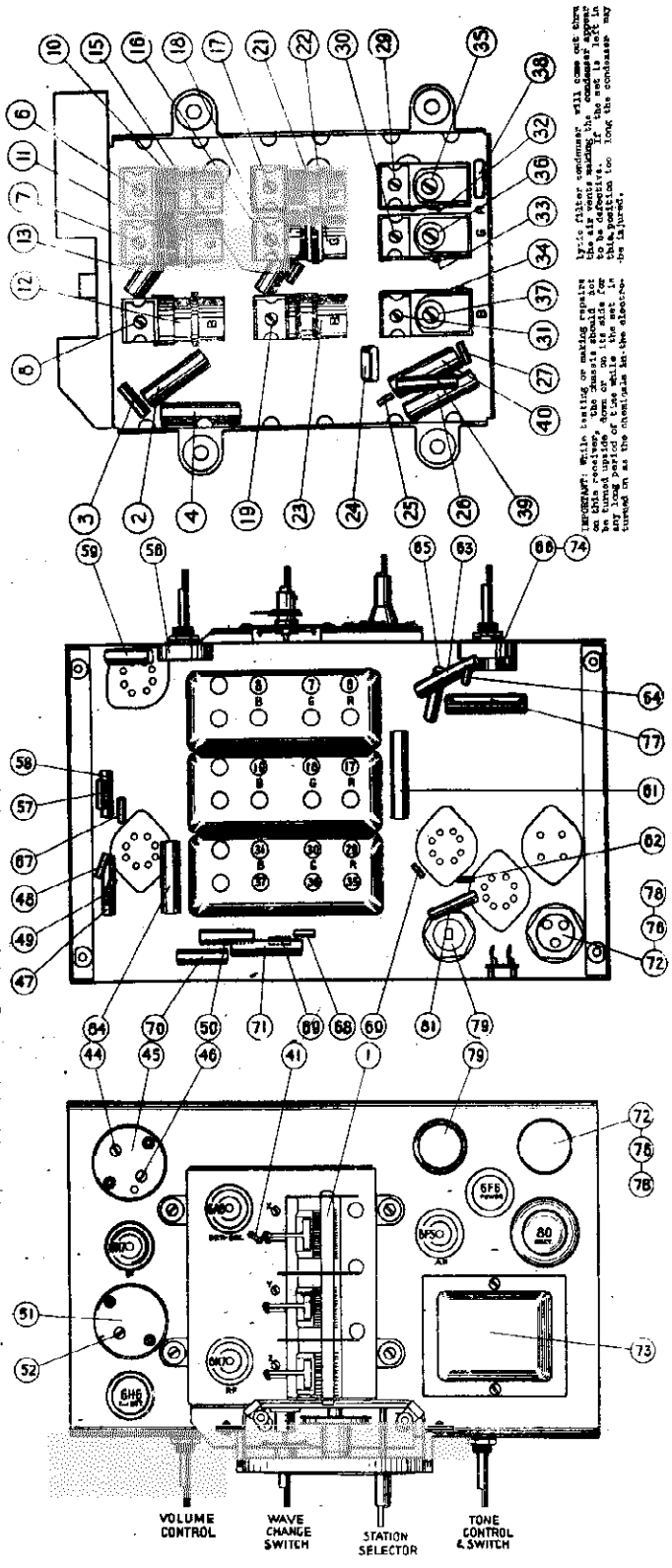

IMPORTANT: While testing or making repairs on this receiver, the chassis should not be turned upside down or laid on its side for the reason that the condenser may be injured.

©John F. Rider, Publisher

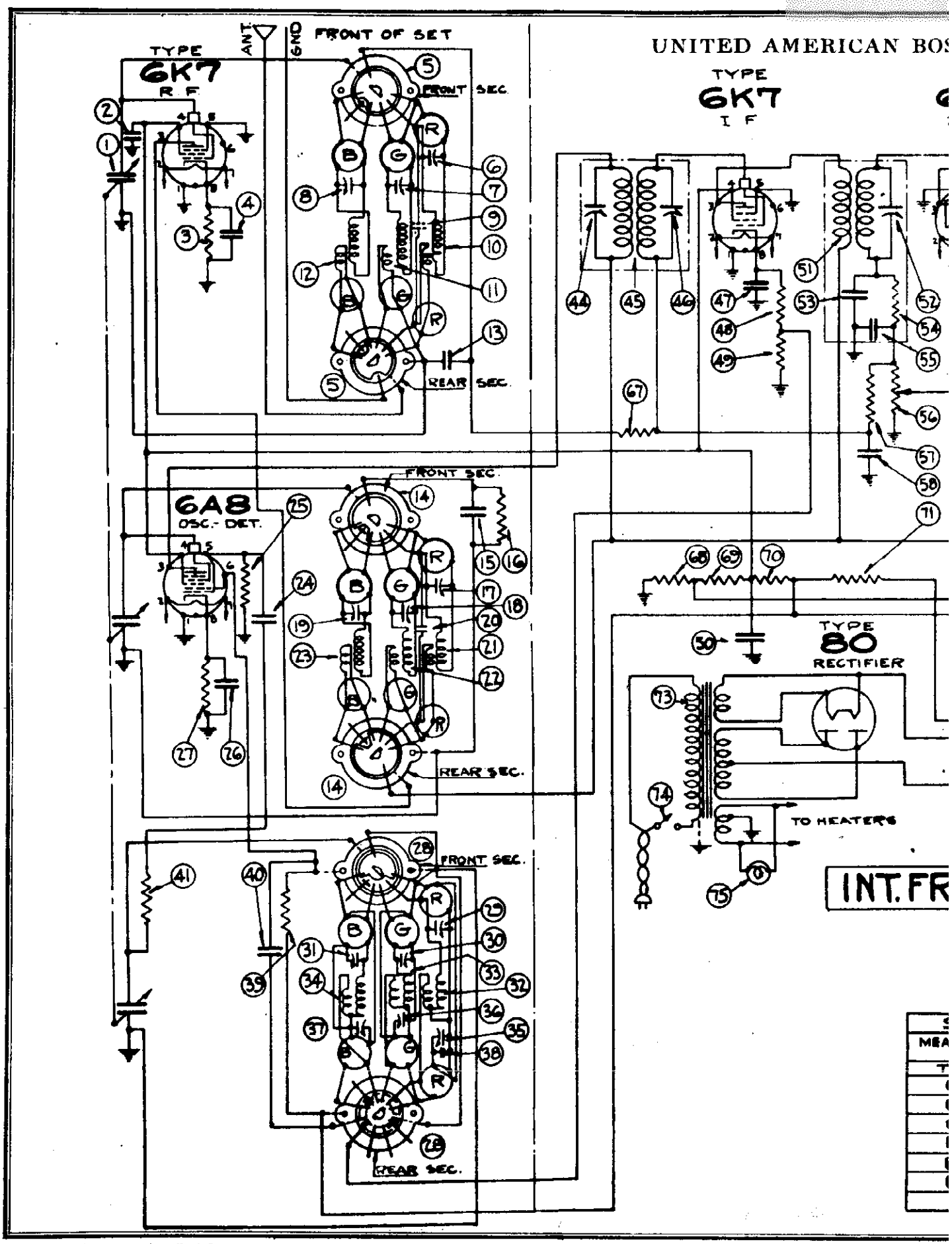

©John F. Rider, Publisher

)SCH CORP.

MODELS 575F, 575Q
Schematic, Voltage
Coil Data

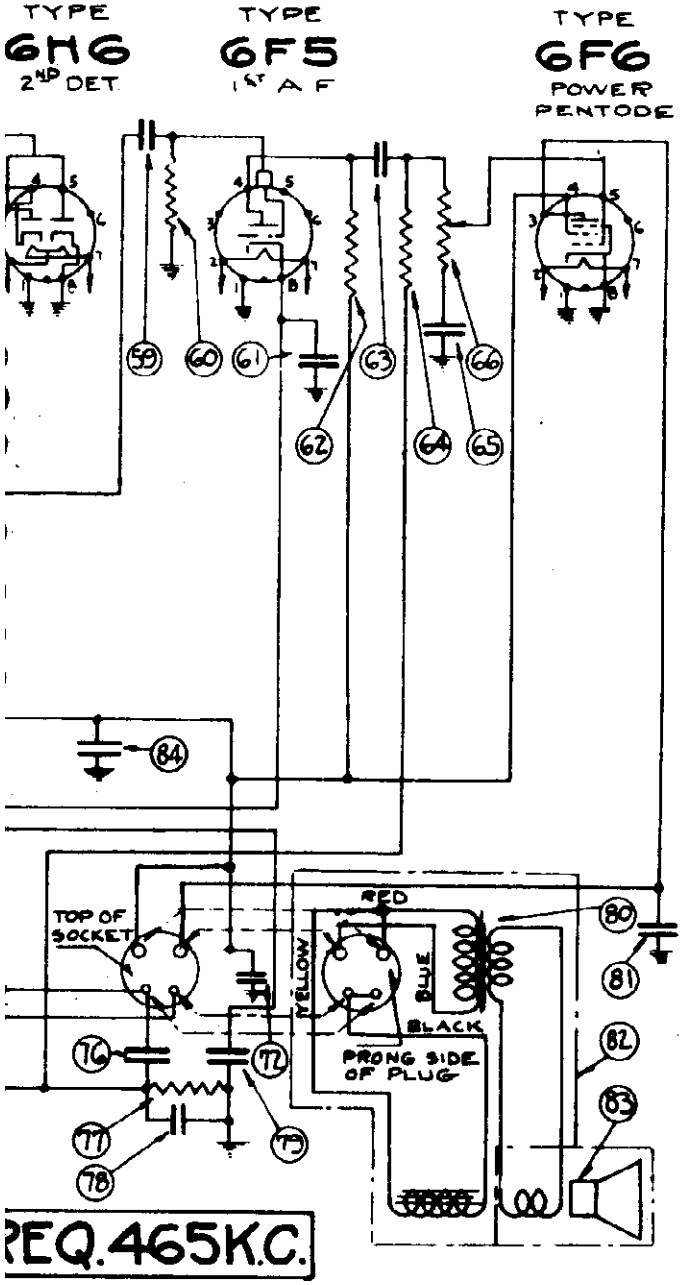

D.C. RESISTANCE MEASURED WITH WAVE-CHANGE SWITCH IN CORRESPONDING BAND POSITION			
COIL	DIA.№	PRIM.	SEC.
B-ANT.	12	22 ohms	4 ohms
B-RF.	23	.5 "	4.5 "
B-OSC.	34	1.5 "	3 "
G-ANT.	11	32 "	1 "
G-RF.	22	1.5 "	1 "
G-OSC.	33	.5 "	1 "
R-ANT.	10	1 "	.04 "
R-RF.	21	2 "	.04 "
R-OSC.	32	.5 "	.04 "
1ST. I.F.	45	15 "	18 "
2ND. I.F.	51	11.5 "	11.5 "
OUTPUT			
TRANS.	80	450 "	.5 "
SPKR.			
FIELD		1800 "	
VOICE			
COIL	83	3 "	

SOCKET VOLTAGES — LINE = 115 VOLTS — TAKEN FROM BOTTOM OF SOCKETS
ASUREMENTS MADE WITH A 1000 OHMS PER VOLT VOLTMETER AND WITH WAVE-CHANGE SWITCH IN BROADCAST BAND POSITION

TUBE	STAGE	FIL.	PIN NOS.	PLATE	PIN NOS.	SCREEN	PIN NOS.	CATHODE	PIN NOS.
6K7	RF.	6.3	2-7	270	3-1	108	4-1	2.6	1-8
6A8	DET.-OSC.	6.3	2-7	230 / 205	SEE OSC. 3=1			4.0	1-8
6K7	IF.	6.3	2-7	265	3-1	105	4-1	5.5	1-8
6H6	2ND. DET.	6.3	2-7						
6F5	1ST. A.F.	6.3	2-7	108	4-1			1.2	1-8
6F6	OUTPUT	6.3	2-7	252	3-1	270	4-1	18.5	ACROSS 77 ADD.
80	RECT.	4.9		370					

SERVICE PARTS LIST MODEL 575F

DIA.#	PART#	DESCRIPTION
1	CG 9527	Variable gang condenser
2	SA 106386	.05 mfd. 200 V. condenser
3	RE 9529	300 ohm ½ W. resistor
4	SA 106386	.05 mfd.200 V. condenser
5	SW 9527	Ant. section of "Centr-O-matic" unit complete with coils,switch and trimmers
6	CS 9511	4 to 25 mmf. antenna trim condenser (Red Band)
7	CS 9511	4 to 25 mmf. antenna trim condenser (Green Band)
8	CS 9511	4 to 25 mmf. antenna trim condenser(Broadcast Band)
9		Twisted pair of wire-part of WC 9571
10	RC 9571	Antenna coil assembly (Red Band)
11	RC 9574	Antenna coil assembly (Green Band)
12	RC 9577	Antenna coil assembly (Broadcast Band)
13	CW 9513	.05 mfd. 200 V. condenser
14	SW 9528	R.F. section of "Centr-O-matic" unit complete with coils,switch and trimmers
15	CW 9513	.05 mfd. 200 V. condenser
16	RE 9527	5000 ohm ½ W. resistor
17	CS 9511	4 to 25 mmf. R.F. trim condenser (Red Band)
18	CS 9512	1.5 to 10. mmf. R.F. trim condenser (Green Band)
19	CS 9512	1.5 to 10. mmf. R.F. trim condenser (Broadcast Band)
20	CM 9512	6 mmf. mica condenser
21	RC 9572	R.F. coil assembly (Red Band)
22	RC 9575	R.F. coil assembly (Green Band)
23	RC 9578	R.F. coil assembly (Broadcast Band)
24	SA 106417	.0001 mica condenser
25	RE 9524	50,000 ohm ½ W. resistor
26	SA 106386	.05 mfd. 200 V. condenser
27	RE 9529	300 ohm ½ W. resistor
28	SW 9529	Oscillator section of "Centr-O-matic" unit,complete with coils,switch, trim and lag condensers
29		3 to 15 mmf. oscillator trim condenser-part of CS 9520 (Red Band)
30		3 to 15 mmf. oscillator trim condenser-part of CS 9520 (Green Band)
31		5 to 25 mmf. oscillator trim condenser-part of CS 9517 (Broadcast Band)
32	RC 95109	Oscillator coil assembly (Red Band)
33	RC 9576	Oscillator coil assembly (Green Band)
34	RC 9579	Oscillator coil assembly (Broadcast Band)
35		800 to 1600 mfd. osc. lag condenser-part of CS 9520 (Red Band)
36		800 to 1600 mfd. osc. lag condenser-part of CS 9520 (Green Band)
37		300 to 600 mfd. oscillator lag condenser-part of CS 9517 (Broadcast Band)
38	GM 959	.002 mfd. mica condenser
39	RE 9526	5000 ohm 1 W. resistor
40	CW 9513	.05 mfd. 200 V. condenser
41	RE 9537	50 ohm ½ W. resistor
44		30 to 100 mmf. trim condenser-part of IC 9527
45	IC 9527	1st I.F. transformer assembly
46		30 to 100 mmf. trim condenser-part of IC 9527
47	SA 102493	.05 mfd. 200 V. condenser
48	SA 105261	400 ohm ½ W. resistor
49	SA 105267	1000 ohm ½ W. resistor
50	SA 102497	.25 mfd. 200 V. condenser
51	IC 9537	2nd I.F. transformer assembly
52		30 to 100 mmf. trim condenser-part of IC 9537
53		50 mmf. mica condenser - part of IC 9537
54		50,000 ohm ½ W. resistor-part of IC 9537
55		100 mmf. mica condenser-part of IC 9537
56	VR 959	Volume control (½ meg.)
57	RE 9530	1 meg. ½ W. resistor
58	SA 106386	.05 mfd. 200 V. condenser
59	CW 9512	.02 mfd. 400 V. condenser
60	RE 9530	1 meg. ½ W. resistor
61	CE 9515	12. mfd. 25 V. condenser
62	SA 105279	250,000 ohm ½ W. resistor
63	CW 9512	.02 mfd. 400 V. condenser
64	RE 9531	250,000 ohm ½ W. resistor
65	SA 106403	.001 mfd. 600 V. condenser
66	VR 9512	Tone control (½ meg.)
67	SA 105278	100,000 ohm ½ W. resistor
68	SA 105260	300 ohm ½ W. resistor
69	SA 104966	30,000 ohm ½ W. resistor
70	SA 101404	15,000 ohm 1 W. resistor
71	SA 103835	10,000 ohm 2 W. resistor
72		4. mfd. 450 V. elect. condenser-part of CE 954
73	TR 959	Power transformer
74		Line switch-part of VR9512
75	SA 106809	Dial lights 6 V. (3 used)
76		8. mfd. 475 V. elect. condenser-part of CE 954
77	RE 9523	300 ohm resistor
78		20. mfd. 25 V. elect. condenser-part of CE 954
79	CE 9511	8. mfd. 300 V. elect. condnser
80	TR 9515	Speaker output transformer
81	SA 103659	.005 mfd. 400 V. condenser
82	SK 9511	Speaker
83	SA 107282	Diaphragm and voice coil assembly
84	SA 102492	.05 mfd. 400 V. condenser

MAIN ASSEMBLIES

PART #	DESCRIPTION
CH 9542	Chassis assembly
CH 9543	Chassis assembly "Centr-O-matic" unit
SK 9511	Speaker
KA 9519	Cabinet

CABLE & CABLE ASSEMBLY

CB 9512	Line cable with plug assembly
PR 97160	Cord - dial drive

TUBE SOCKETS

SO 956	Tube sockets - 8 prong
SA 104615	Tube sockets - 4 prong

SCREWS AND NUTS

SC 955	Chassis mounting screws
SC 106331	Speaker fastening screw
NT 104354	Nut for speaker fastening screw
SC 1038 CA	Self tapping screw # 4 x 1/4"
SC 103709	Self tapping screw #10 x 3/8"
SC 105642	Self tapping screw # 7 x 1/4"

SPEAKER PARTS

SA 107282	Diaphragm and coil assembly
TR 9515	Speaker output transformer
FP 106498	Steel plate
CL 9533	Speaker field coil
SA 106492	Core frame assembly
SA 101856	Insulation plate assembly
SA 107273	Copper washer assembly
SA 106677	Fastening screw - housing to frame
FP 107169	Transformer bracket
SC 105642	Fastening screw - transformer to bracket
SA 107278	Speaker plug
SA 107279	Speaker plug cover
FP 79381	Clamp - cable

MISCELLANEOUS

SA 107353	Knob - tuning small
KN 9522	Knob - tuning large
KN 9521	Knob - wave change switch
KN 9520	Knob - tone and volume control
SA 107257	Speaker socket
IS 9593	Terminal clip - antenna and ground
IS 9589	Insulation assembly on rear of chassis
IS 9590	Insulation assembly on side of chassis
SH 9524	Vernier drive and plate assy.
PU 9513	Dial drive pulley assembly
SI 9526	Wave band indicator assembly
SH 9527	Wave change switch shaft and plate assembly
SA 104822	Dial lamp socket - 2 used
SO 955	Dial lamp socket (Band indicator)
BK 95120	Dial scale mounting bracket
FP 103164	Spring for dial cable
DS 9534	Dial scale
CV 95130	Cover for dial scale
SI 9512	Dial scale indicator
FP 102133	Speaker cardboard ring
FP 97803	Spacer for speaker socket
FP 65772	Spring ring used with GE 958
IS 95105	Shield for dial lamps
GE 958	Celluloid gear and pinion assembly (second hand)
GE 955	Small pinion gear(second hand)
SI 9533	Indicator (second hand)

MODEL 575Q

Service parts list for Model 575Q are the same as for Model 575F except for the following parts:

DIA.#	PART#	DESCRIPTION
82	SK 9513	Speaker
83	SA 102283	Diaphragm and voice coil assembly

MAIN ASSEMBLIES

PART #	DESCRIPTION
SK 9513	Speaker
KA 9520	Cabinet

SPEAKER PARTS

SA 102283	Diaphragm and coil assembly
FP 102270	Steel plate
FP 101742	Cardboard washer
CL 9537	Speaker field coil
SA 101733	Core and frame assembly
SC 102132	Core and frame fastening screw
FP 79381	Cable clamp
SC 101865	Diaphragm fastening screw
TR 9515	Speaker output transformer
SC 101864	Speaker output transformer fastening screw
SA 107278	Speaker plug
SA 107279	Speaker plug cover
FP 101740	Copper ring

MISCELLANEOUS

FP 102133	Cardboard speaker baffle ring
SC 101788	Chassis mounting screws

©John F. Rider, Publisher

UNITED AMERICAN BOSCH CORP.

MODEL 600
Preliminary
Schematic
Voltage, Parts

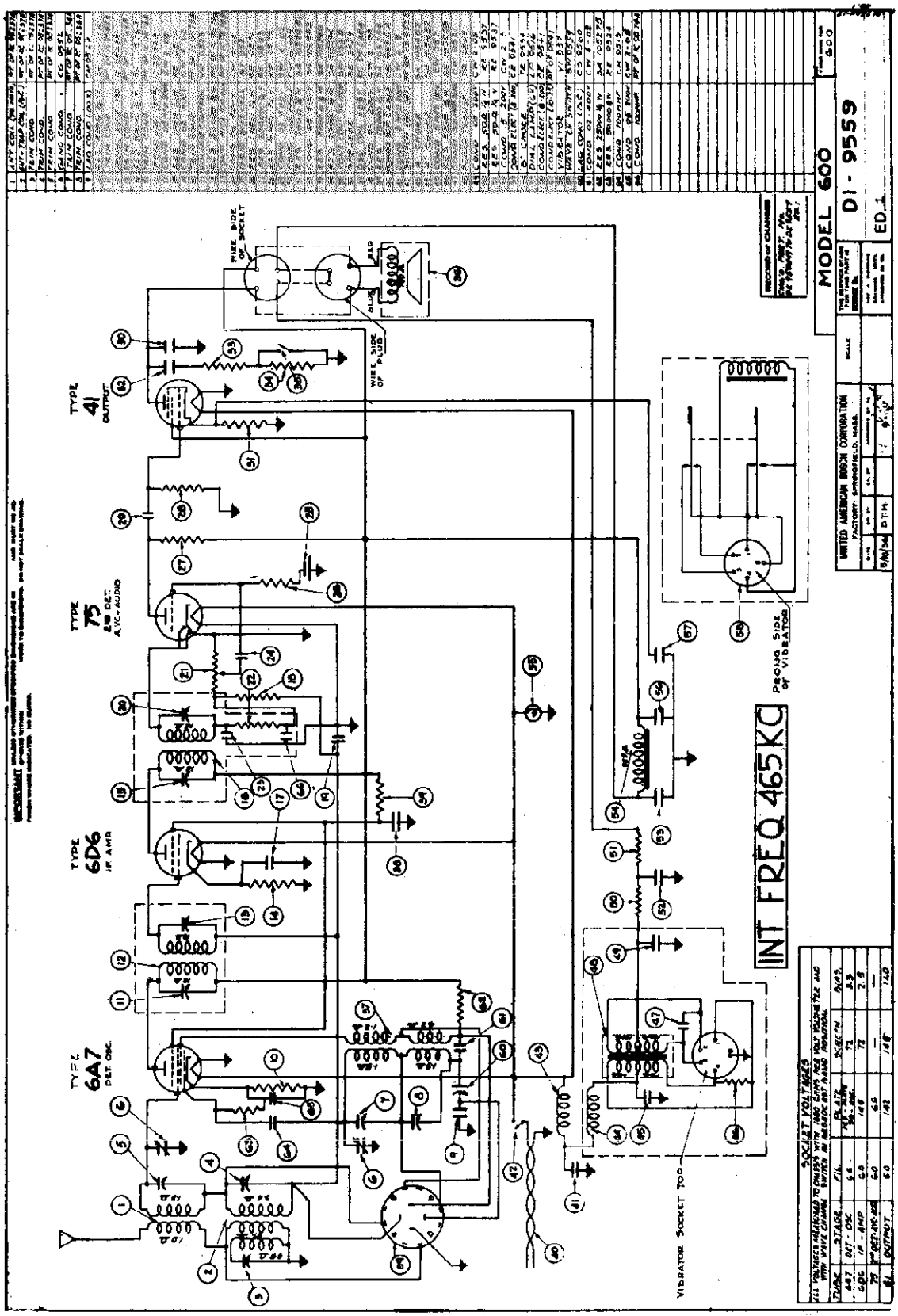

©John F. Rider, Publisher

MODEL 601
Preliminary
Schematic
Voltage, Parts

UNITED AMERICAN BOSCH CORP.

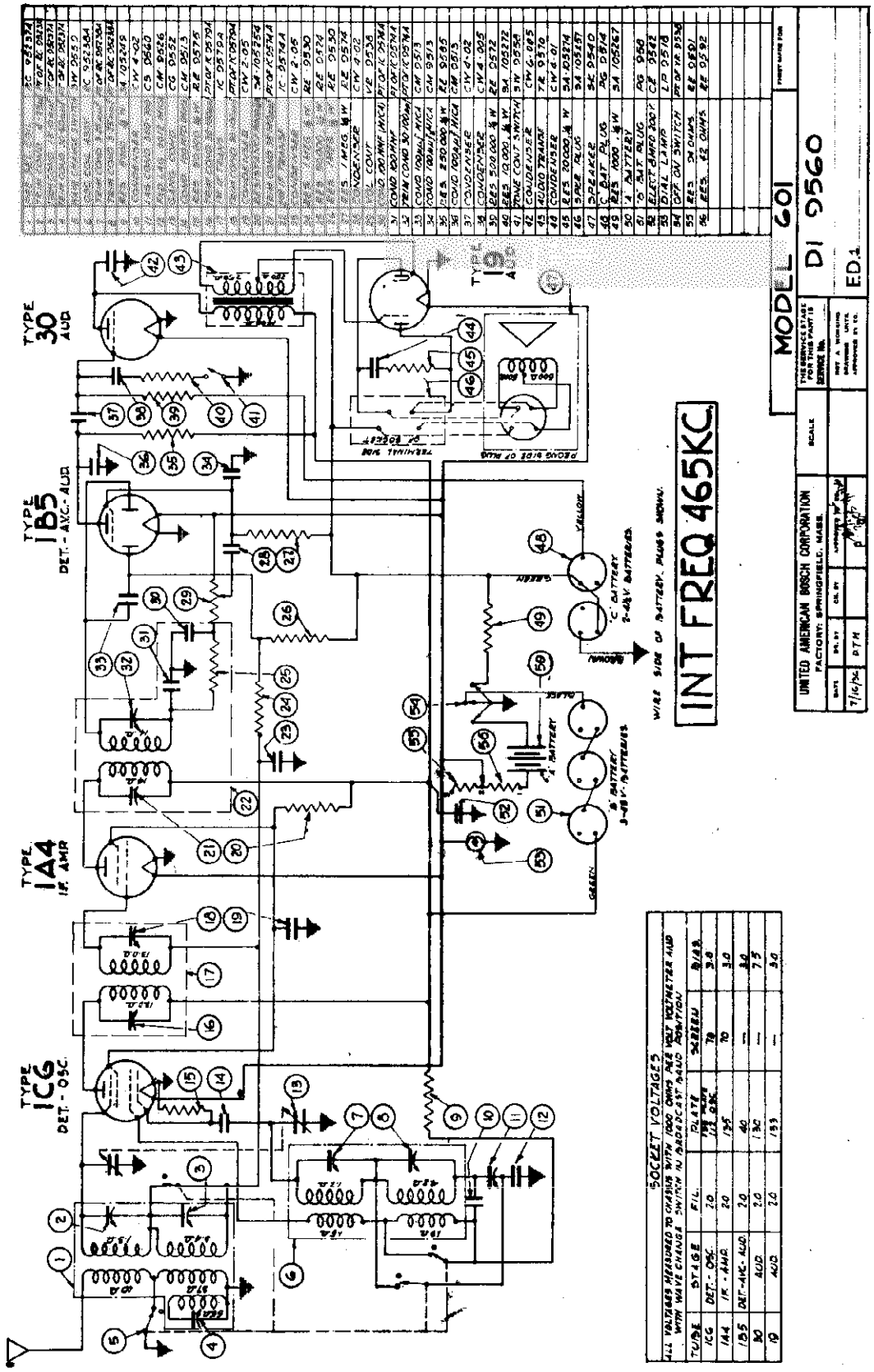

©John F. Rider, Publisher

MODEL 602
Preliminary
Schematic
Voltage, Parts

UNITED AMERICAN BOSCH CORP.

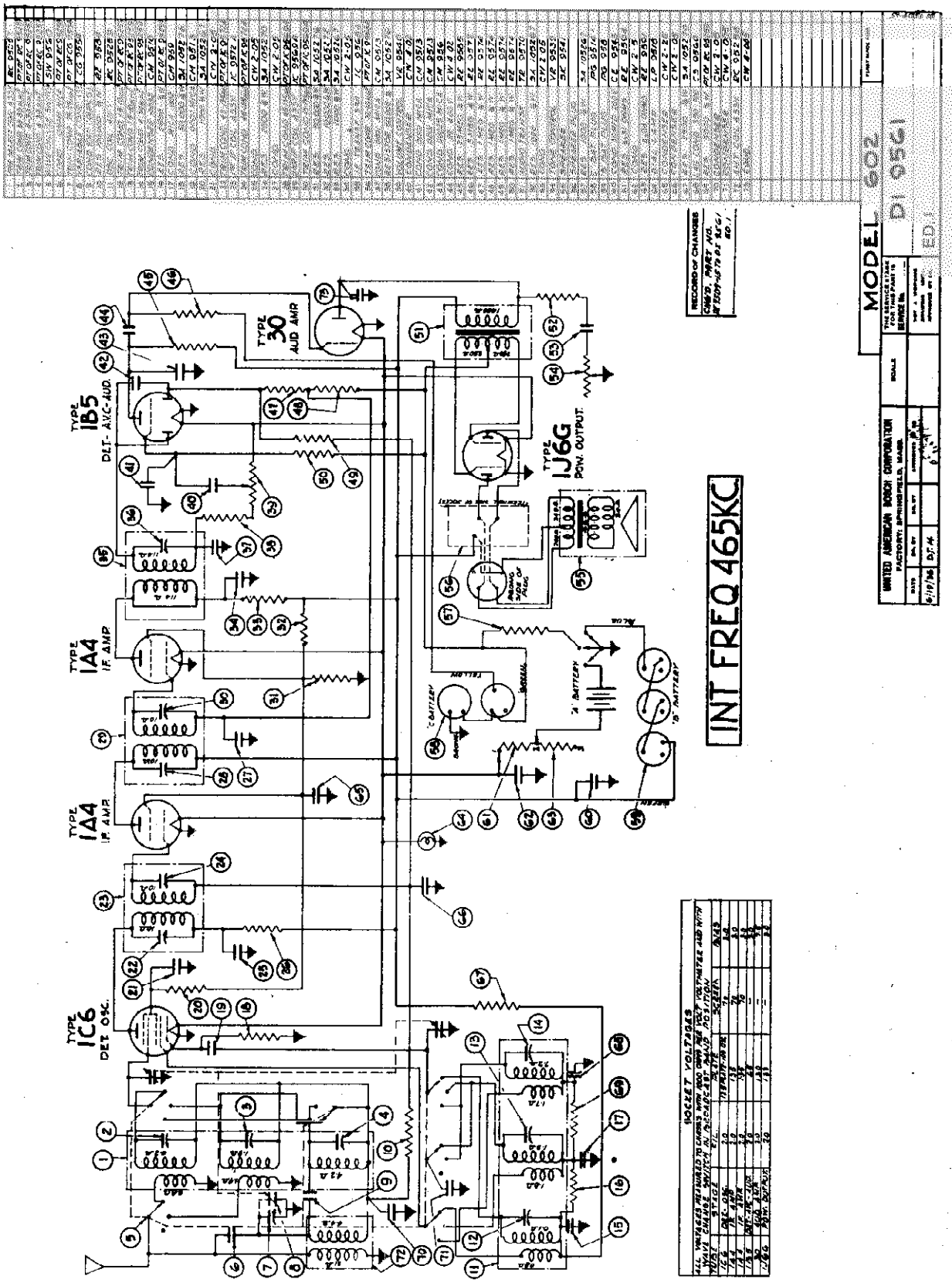

©John F. Rider, Publisher

MODEL 350
MODELS 355,357
Socket, Trimmers
Voltage, Alignment

UNITED AMERICAN BOSCH CORP.

MODELS 355 & 357

ELECTRICAL SPECIFICATIONS

Type and Number of Tubes ---------- 1 #6A7, 1 #78, 1 #75, 1 #43, 1 #25Z5 - Total 5
Power Supply Characteristics ---------- 105 to 125 volts D.C. or A.C. 50 to 60 cycles
Power Consumption ---------- 45 Watts
Tuning Range ---------- 540 to 4200 K.C.
Maximum Undistorted Power ---------- 3 Watts
Line-Up Frequencies ---------- 175 K.C., 1400 K.C., 600 K.C., 1800 K.C.

GENERAL DESCRIPTION

The Model 357 is a five tube, two band, A.C.- D.C., superheterodyne receiver whose circuits consist of a combined first detector - oscillator, and intermediate frequency amplifier stage, a combined second detector-automatic volume control and first audio amplifier, an output stage and rectifier.

The receiver is of the two band type and is designed to work on the following frequencies:

On the Black band from 540 to 1600 kilocycles and on the Red band from 1600 to 4200 kilocycles.

LINE-UP CAPACITOR ADJUSTMENTS

To align the 357 chassis, it is essential to use a high grade modulated oscillator and sensitive output meter. The R.F. signal fed into the receiver must be weak or it will cause the A.V.C. to function, making correct alignment difficult. The sensitivity of the output meter must be sufficient to give satisfactory reading with a low signal.

Before attempting to align a receiver, the serviceman should familiarize himself with the general layout of the chassis, the location of the tubes and various alignment condensers. A top view of the chassis is shown in Figure #1 and should be carefully studied before the actual work is started.

ADJUSTMENT OF I.F. (175 K.C.)

1. Set volume control on full.
2. Tone control should be on bass position.
3. Connect output meter across voice coil of loud speaker (speaker impedance is 3.5 ohms).
4. Set test oscillator to 175 K.C. and adjust its output to produce measurable reading on output meter when test oscillator is connected between frame of the chassis and the grid of 78 I.F. tube #4.
5. Adjust #8 and #9 to maximum output, reducing signal oscillator output as stage is brought into resonance.
6. Connect test oscillator to grid of 6A7 (#6) and adjust #10 and #11 to maximum output.

ADJUSTMENT OF B.C. OSC. & R.F.

1. Set wave change switch to broadcast or BLACK scale position.
2. Connect test oscillator to grid of first detector tube 6A7 (#5) and adjust test oscillator to 1400 K.C.
3. Check dial scale by observing maximum mark beyond 550 K.C. calibration point when gang is entirely closed.
4. Set scale at 1400 K.C. and adjust #12 to maximum output. NOTE: Two peaks will be heard as trimmer condenser is tuned. The second peak from maximum capacity of trim condenser should be used.
5. Connect test oscillator to antenna through 100. mmf. condenser and with scale still setat 1400 K.C. adjust condensers #12, 13 and 14 to maximum output.
6. Set scale and test oscillator to 600 K.C. and adjust #16 simultaneously changing this adjustment and the tuning control of chassis for maximum output. This type of adjustment is known as "max-max" and is obtained in the following manner:

Tune receiver with left hand by means of tuning knob and adjust #16 in either direction, and then without changing it, tune the receiver through a maximum, noting the value of output meter reading. Change #16 further in same direction, retune receiver and note reading. If output drops with second adjustment, reverse direction of the adjustment of #16, continue this type of trial and error adjustment until no further improvement can be made when either tuning control or #16 are changed. While this procedure may appear difficult, facility can be easily acquiredby practice and the operation requires only a few moments.

7. With test oscillator and scale set at 1400 K.C. readjust #12,13 and 14, since previous operation may have altered oscillator trimmer setting.
8. Check sensitivity across band.

ADJUSTMENT OF S.W. OSCILLATOR

1. Set wave change switch to short wave or RED band position.
2. Set test oscillator to 1800 K.C. and adjust #15 and tuning control to a "max-max" as per instructions given under Broadcast Band Alignment.
3. Check sensitivity across band.

SOCKET VOLTAGES

		A.C. MEASUREMENT				D.C. MEASUREMENT				
Stage	Tube	Fil.	Plate	Screen	Cathode	Stage	Tube	Fil.	Plate	Screen	Cathode
Det.) Osc.)	6A7	5.1	118 97	45	1.4	Det.) Osc.)	6A7	5.6	105 85	40	1.1
I.F.	78	5.1	118	118	5.0	I.F.	78	5.6	105	105	2.4
2 Det.	76	5.3	50		0.7	2 Det.	76	5.8	47		0.6
Pent.	43	22.3	105	118	18	Pent.	43	25	97	105	18
Rect.	25Z5	24	128			Rect.	25Z5	50	115		

Volts drop across series fil. resistor- 44
Dynamic field excitation - 115 volts
Line - 115 volts A.C. --- Power - 45 watts
Current - .43 amps.

Volts drop across series fil. resistor- 52
Dynamic field exitation - 115 volts
Line = 115 volts D.C.

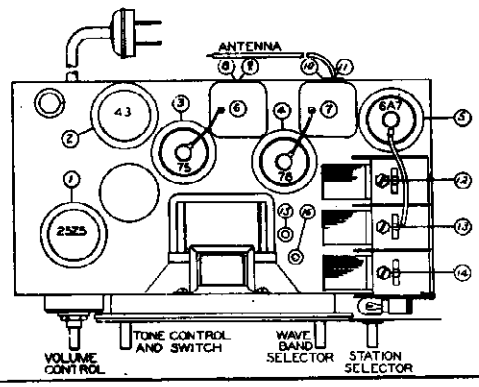

MODEL 350

ELECTRICAL SPECIFICATIONS

Type and Number of tubes ---------- 1 #2A7, 1 #6B, 1 #2A6, 1 #2A5, 1 #80 - Total 6
Power Supply Characteristics ---------- 105 to 125 volt, 50 to 60 cycle
Power Consumption ---------- 50 Watts
Tuning Ranges ---------- 540 to 4200 K.C.
Maximum Undistorted Output ---------- 3 Watts
Line-Up Frequencies ---------- 175 K.C., 1400 K.C., 600 K.C., 1800 K.C.

GENERAL DESCRIPTION

The Model 350 is a five tube, two band, superheterodyne receiver. Its circuit comprises a combined first detector-oscillator, a stage of intermediate frequency amplification, a combined second detector-automatic volume control and first audio amplifier, a power output amplifier and a rectifier.

This receiver is designed to work over two bands; the broadcast band (black band) extending from 540 to 1600 kilocycles and the red band extending from 1600 to 4200 kilocycles.

LINE UP CAPACITOR ADJUSTMENTS

To properly align the Model 350 chassis, it is essential to use a high grade modulated oscillator and a sensitive output meter. The R.F. signal fed into the receiver must be very weak or it will cause the A.V.C. to function making correct alignment impossible. The sensitivity of the output meter must be sufficient to give satisfactory reading with a low signal.

Before attempting to align a receiver, the service man should familiarize himself with the general layout of the chassis, the location of the tubes and the various alignment condensers. A top view of the chassis is shown in Fig. #2 and should be carefully studied before the actual work is started.

1. Set volume control on full.
2. Tone control should be on bass position.
3. Short circuit antenna and ground leads to prevent local stations from interfering with subsequent alignment operations.
4. Connect output meter across voice coil of loud speaker (speaker impedence is 3.5 ohms).
5. Set test oscillator to 175 K.C. and adjust its output to produce measurable readings on output meter when test oscillator is connected between frame of the chassis and the grid of 68 I.F. tube #6.
6. Adjust #4 and #5 to maximum output, reducing signal oscillator output as stage is brought into resonance.
7. Connect test oscillator to grid of 2A7 (#9) and adjust #7 and #8 to maximum output.

ADJUSTMENT OF B.C. OSC. & R.F.

1. Set wave change switch to broadcast or BLACK scale position.
2. Connect test oscillator to grid of first detector tube 2A7 (#2) and adjust test oscillator to 1400 K.C.
3. Set dial scale to maximum mark beyond 550 K.C. calibration point when gang is entirely closed.
4. Set scale at 1400 K.C. and adjust #10 to maximum output. NOTE: Two peaks will be heard as trimmer condenser is tuned. The second peak from maximum capacity should be used.
5. Connect test oscillator to antenna through 100. mmf. condenser and with scale still set at 1400 K.C. adjust condensers #10, 11 and 12 to maximum output.
6. Set scale and test oscillator to 600 K.C. and adjust #14 simultaneously changing this adjustment and the tuning control of chassis for maximum output. This type of adjustment is known as "max-max" and is obtained in the following manner:

Tune receiver with left hand by means of tuning knob and adjust #14 in either direction and then without changing it, tune the receiver through a maximum, noting the value of output meter reading. Change #14 further in same direction, retune receiver and note reading. If output drops with second adjustment, reverse direction of the adjustment of #14, continue this type of trial and error adjustment until no further improvement can be made when either tuning control or #14 are changed. While this procedure may appear difficult, facility can be easily acquired by practice and the operation requires only a few moments.

7. With test oscillator and scale set at 1400 K.C. readjust #10,11 and 12, since previous operation may have altered oscillator trimmer setting.
8. Check sensitivity across band.

ADJUSTMENT OF S.W. OSC.

1. Set wave change switch to short wave or RED band position.
2. Set test oscillator to 1800 K.C. and adjust #13 and tuning control to a "max-max" as per instructions given under Broadcast Band Alignment.
3. Check sensitivity across band.

TROUBLE NOTES

INTERMITTENT RECEPTION

Intermittent reception occurring in the early Model 350 is caused by variations in characteristics in the 2A7 tube. The following circuit changes will stabilize the action of the 2A7 oscillator tube.

1. Replace R5 and R6 (2A7 and 58 bias resistors) with 750 ohm resistors.
2. Remove #18 which is connected between the 2A7 oscillator plate terminal and R6.
3. Connect a 50,000 ohm resistor to the 2A7 oscillator plate terminal and the 250 volt terminal of the electrolytic condenser.

NOTE: This 250 volt terminal may be located by turning chassis upside down and looking at the chassis from the back. The 250 volt point is the upper right hand terminal of the electrolytic condenser.

4. Replace C28 (2A5 bypass condenser) with a .01-600 volt condenser. Parts required for above changes:

2 RA 105885 - 750 ohm resistors
1 RA 105874 - 20,000 ohm resistor
1 RA 103895 - .01 mfd. 600 V. condenser

Should a loud hum develop in the Model 350, it is probably caused by a poor ground between the riveted connection from the filament of the 2A6 socket to ground. This can be corrected by soldering a short lead from the filament lug on the socket to the body of the chassis.

TUBE	STAGE	FIL.	PLATE	SCREEN	CATHODE	GRID	
2A7	1ST DET	2.4	75	30	0.8		LINE VOLTAGE 115
	OSC.		60				POWER IN WATTS 50
58	I.F.	2.4	250	75	2.0		BIAS 2A5 ACROSS
2A6	2 ND. DET.	2.4	95		1.5		RESISTOR 15 VOLTS
2A5	PENTODE	2.5	235	220	9	7.5	
80	RECTIFIER	4.7					

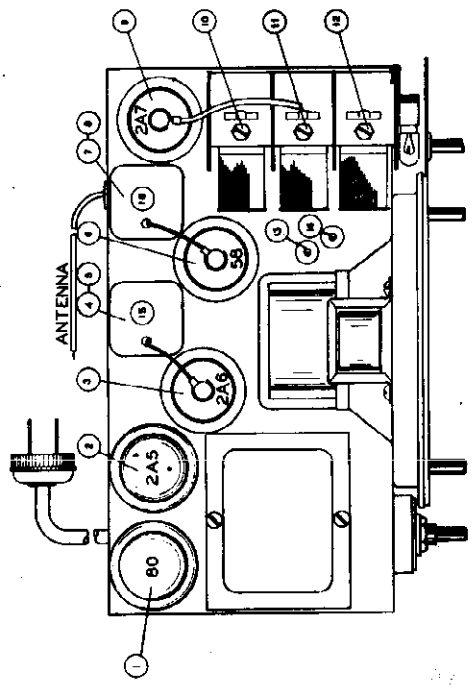

Figure No. 2

©John F. Rider, Publisher

UNITED AMERICAN BOSCH CORP.

MODEL 604
Preliminary
Schematic
Voltage

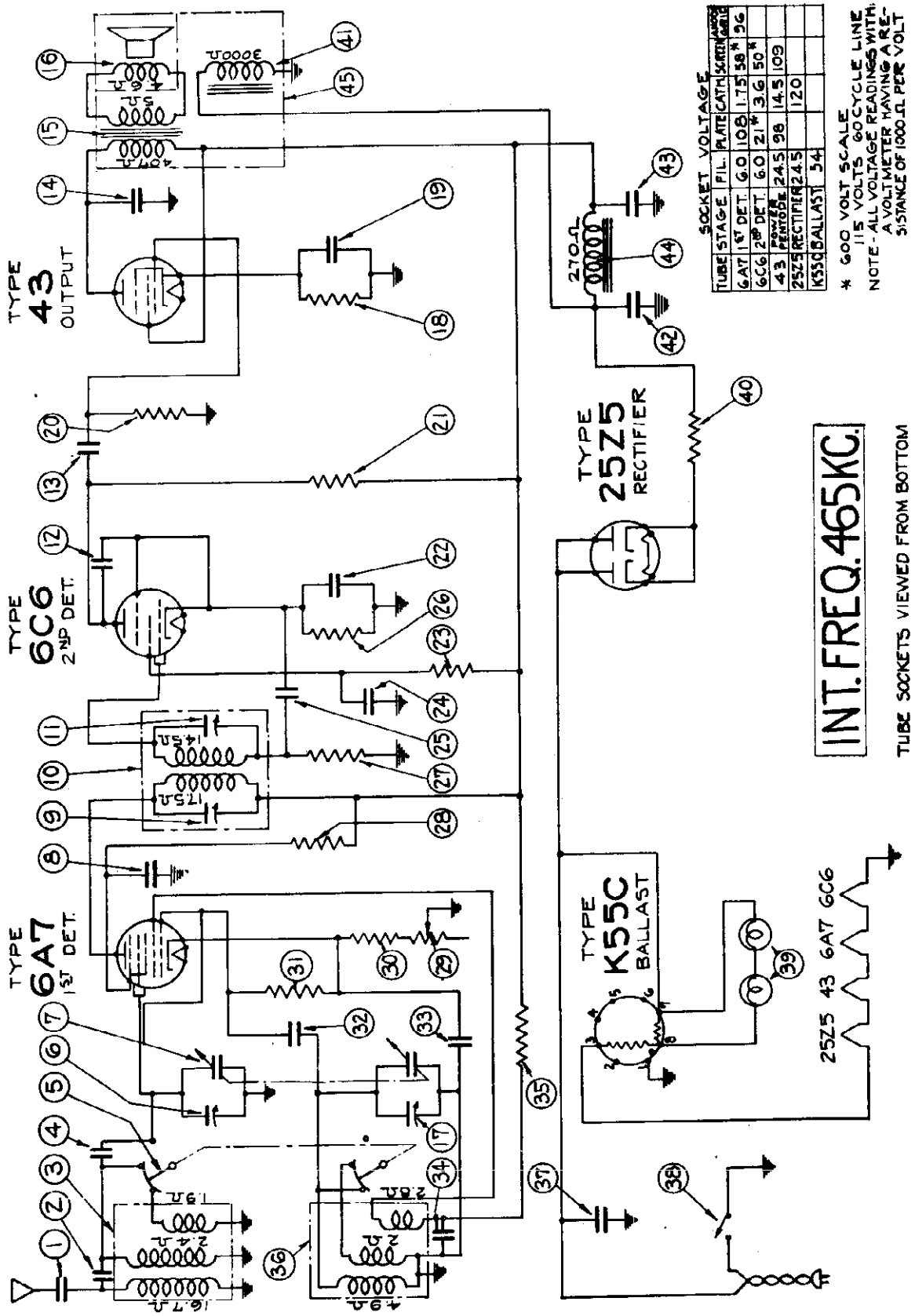

SOCKET VOLTAGE

TUBE	STAGE	FIL.	PLATE	CATH	SCREEN
6A7	1ST DET.	6.0	108	1.75	58* 96
6C6	2ND DET.	6.0	21*	3.6	50*
43	POWER PENTODE	24.5	98	14.5	109
25Z5	RECTIFIER	24.5			120
K55C	BALLAST	54			

* 600 VOLT SCALE
115 VOLTS 60 CYCLE LINE
NOTE - ALL VOLTAGE READINGS WITH A VOLTMETER HAVING A RESISTANCE OF 1000 Ω PER VOLT

©John F. Rider, Publisher

MODEL 604
Socket, Trimmers
Chassis, Parts
Alignment

UNITED AMERICAN BOSCH CORP.

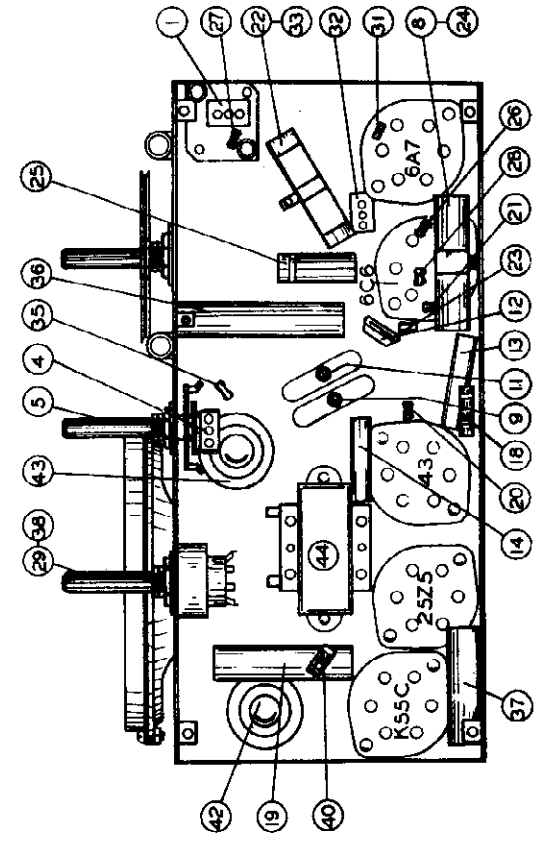

Figure No. 2

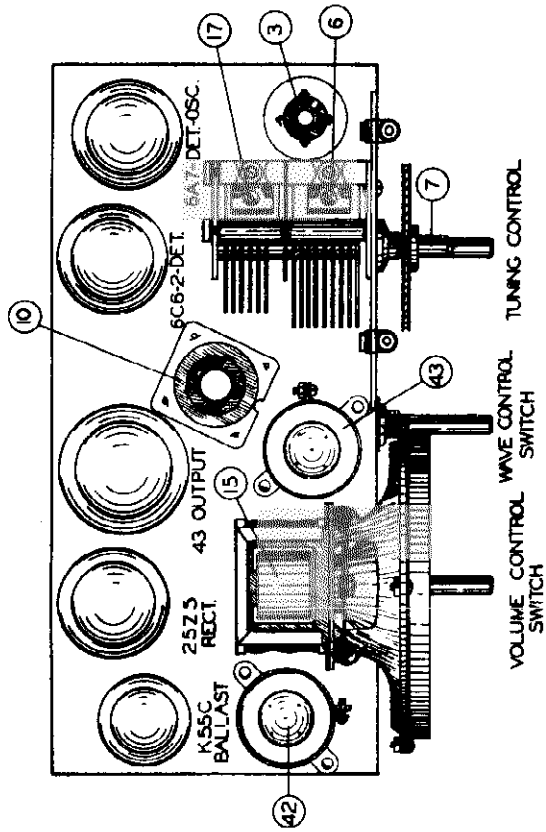

Figure No. 1

ELECTRICAL SPECIFICATIONS

Type and Number of Tubes .. 1 #6A7, 1 #6C6, 1 #43, 1 #25Z5, 1 #K55C (Ballast) - Total 5
Power Supply Characteristics .... 105-125 volts D.C. or 105-125 volts, 50-60 cycle A.C.
Power Consumption ..... 44 Watts
Total Power Output ..... 1.10 Watts
Undistorted Power Output ..... 0.75 Watts
Tuning Ranges ..... (Broadcast Band 550 to 1525 K.C.
(Shortwave Band 1500 to 3000 K.C.
Line-Up Frequencies ..... I.F. 465 K.C., 1400 K.C.

GENERAL DESCRIPTION

This model is a four-tube (plus a ballast tube), two-band superheterodyne receiver, designed to operate over the standard broadcast band extending from 550 to 1525 K.C., and a short-wave band extending from 1500 to 3000 K.C.

The receiver uses a type 6A7 tube as a first detector-oscillator, a type 6C6 as a second detector, a type 43 as a power output tube, a type 25Z5 as a rectifier and a type K55C as a ballast tube.

LINE-UP CAPACITOR ADJUSTMENTS

To properly align the circuits of this receiver it is essential to use a high grade modulated test oscillator, the output of which can be continuously varied and reduced sufficiently to prevent overload as the individual circuits of the receiver are brought into alignment. A conventional output meter should be connected across the terminals of the speaker voice coil to indicate when the individual circuits are correctly aligned. The sensitivity of this meter must be sufficient to give satisfactory readings with low input signals.

Before attempting to align the receiver, the service man should familiarize himself with the general layout of the chassis, location of the various tubes and alignment condensers. Top and bottom views of the chassis are shown in Figures #1 and #2 and should be carefully studied before actual work is started.

ALIGNMENT OF I.F. (465 K.C.)

1. Set the volume control to maximum position and wave change switch to standard broadcast band.
2. Connect the output meter across the voice coil terminals of the speaker.
3. Set the test oscillator to 465 K.C. and adjust its output to produce a measureable reading on the output meter when the test signal is applied to the grid of the type 6A7 first detector-oscillator tube through a 0.5 mfd. blocking condenser.
4. Adjust trimmers #9 and #11 to maximum output.

ALIGNMENT OF OSCILLATOR AND R. F.

1. Check the pointer setting to be sure that is is exactly horizontal when the tuning condenser is completely closed.
2. Set the test oscillator and dial indicator to 1400 K.C. and adjust the oscillator trimmer condenser #17 to maximum output.
3. Apply the test signal to the antenna of the receiver through a .0001 mfd. blocking condenser and adjust trimmer condenser #6 to maximum output.
4. Check sensitivity over the band.
5. Turn wave change switch to the shortwave band and check the sensitivity over scale.

Dia. #	Part #	Description of Parts
1	CM 9519	.0005 mfd., mica condenser
2	CS 9546	5 mmf., mica condenser
3	RC 95197	Antenna coil assembly
4	CM 9522	.00048 mfd., mica condenser
5	SW 9545	Wave change switch
6		Trimmer condenser - part of CG 9547
7	CG 9547	Tuning condenser
8		.05 mfd., 200 V. condenser - part of SA 105327
9		Trimmer condenser - part of IC 9566
10	IC 9566	I.F. coil
11		Trimmer condenser - part of IC 9566
12	CM 9519	.0005 mfd., mica condenser
13	CW 4-01	.01 mfd., 400 V. condenser
14	CW 4-01	.01 mfd., 400 V. condenser
15	TR 9560	Output transformer
16	DM 9512	Diaphragm and voice coil assembly
17		Trimmer condenser - part of CG 9547
18	RE 9567	600 ohm, 1/2 W. resistor
19	CM 9518	12 mfd., 25 V. electrolytic condenser
20	RE 9548	1/2 meg., 1/4 W. resistor
21	RE 9545	1/2 meg., 1/4 W. resistor
22		.05 mfd., 200 V. condenser - part of SA 105327
23	RE 9545	1/2 meg., 1/4 W. resistor
24		.05 mfd., 200 V. condenser - part of SA 105327
25	CW 2-10	.1 mfd., 200 V. condenser
26	RE 9568	25,000 ohm, 1/4 W. resistor
27	RE 9530	1 meg., 1/4 W. resistor
28	RE 9569	50,000 ohm, 1/4 W. resistor
29	VR 9531	Volume control
30		300 ohm resistor - part of VR 9531
31	RE 9524	50,000 ohm, 1/4 W. resistor
32	CM 9513	.0001 mfd., mica condenser
33		.05 mfd., 200 V. condenser - part of SA 105327
34	CW 4-005	.005 mfd., 400 V. condenser
35	RE 9527	5,000 ohm, 1/4 W. resistor
36	RC 95166	Oscillator coil assembly
37	CW 2-10	.1 mfd., 200 V. condenser
38		Switch (On-Off) - part of VR 9531
39	LP 9515	Dial lamp - 6.3 V.
40	RE 9566	85 ohm, 1/2 W. resistor
41		Speaker field coil - part of SK 9531
42	CE 9533	12 mfd., 150 V. electrolytic condenser
43	CE 9534	16 mfd., 150 V. electrolytic condenser
44	SA 105311	Choke coil assembly

Part #	Description of Parts
	MAIN ASSEMBLIES
CH 95100	Chassis assembly
KA 9545	Cabinet
SK 9531	Speaker
	TUBE SOCKETS
SO 956	Tube socket - 8 prong
SA 105461	Tube socket - 7 prong
SA 104617	Tube socket - 6 prong
	MISCELLANEOUS
DS 9550	Dial scale
KN 9553	Knobs
SI 9545	Dial indicator
FP 102859	Felt feet
SC 952	Screw for dial indicator
CV 95189	Cover - front of speaker
PU 9517	Large pulley on tuning condenser
SH 9539	Dial drive shaft
PU 9516	Small dial drive pulley
BK 95193	Dial lamp bracket
SO 9518	Dial lamp socket
FP 105427	Dial lamp contact spring
SP 9539	Spring on dial drive cord
BK 95182	Electrolytic condenser mounting bracket
BG 9523	Dial drive shaft bearing
PN 97160	Dial drive cord

©John F. Rider, Publisher

MODELS 605,605C
Preliminary
Schematic.Voltage

UNITED AMERICAN BOSCH CORP.

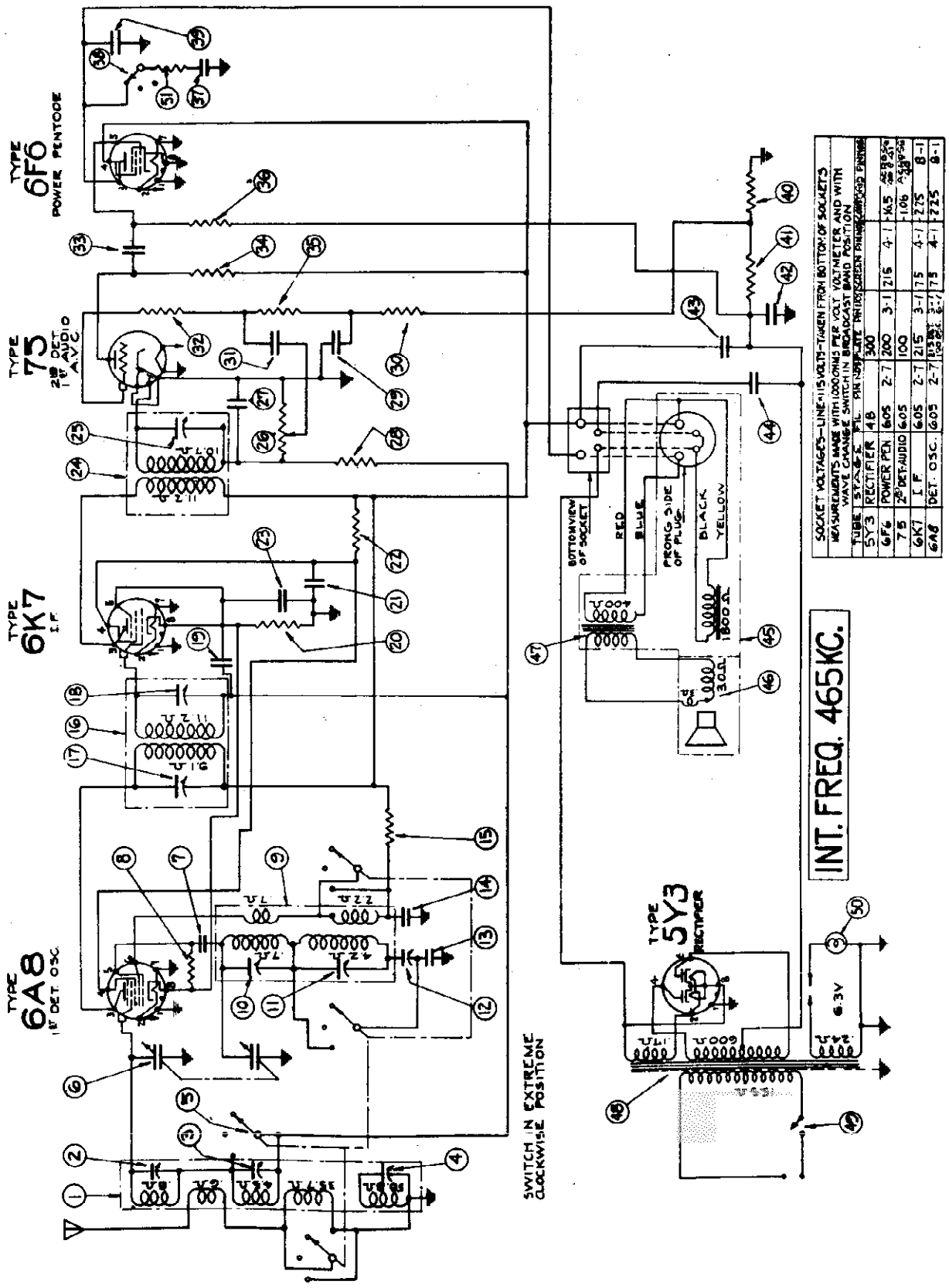

©John F. Rider, Publisher

MODELS 605,605C
Preliminary
Socket,Trimmers
Parts List

UNITED AMERICAN BOSCH CORP.

Dia. #	Part #	Description of Parts
1	RC 95200	Antenna coil
2		4-25 mmf. trimmer condenser - part of RC 95200
3		1.5-10 mmf. trimmer condenser - part of RC 95200
4		30-60 mmf. trimmer condenser - part of RC 95200
5	SW 9546	Switch assembly
6	CG 9548	Variable tuning condenser
7	CM 9513	.0001 mfd. mica condenser
8	RE 9524	50,000 ohm, 1/4 W. resistor
9	RC 95199	Oscillator coil
10		10-45 mmf. trimmer condenser - part of RC 95199
11		4-25 mmf. trimmer condenser - part of RC 95199
12	CS 9545	Oscillator series condenser
13	CL 9523	.003 mfd. mica condenser
14	SW 4-005	.005 mfd., 400 V. condenser
15	RA 105349	5000 ohm, 1/4 W. resistor
16	IC 9569	1st I.F. coil
17		45-135 mmf. trimmer condenser - part of IC 9569
18		45-135 mmf. trimmer condenser - part of IC 9569
19	CW 2-05	.05 mfd., 200 V. condenser
20	RE 9570	180 ohm, 1/4 W. resistor
21	CW 2-05	.05 mfd., 200 V. condenser
22	RE 9524	50,000 ohm, 1/4 W. resistor
23	CW 2-10	.1 mfd., 200 V. condenser
24	IC 9568	2nd I.F. coil
25		30-60 mmf. trimmer condenser - part of IC 9569
26	VR 9552	Volume control (.5 megohm)
27	CM 9519	.0005 mfd. mica condenser
28	RE 9530	1 meg., 1/4 W. resistor
29	CW 2-05	.05 mfd., 200 V. condenser
30	RE 9524	50,000 ohm, 1/4 W. resistor
31	CW 4-02	.02 mfd., 400 V. condenser
32	RE 9534	100,000 ohm, 1/4 W. resistor
33	CW 4-02	.02 mfd., 400 V. condenser
34	RE 9531	1/4 meg., 1/4 W. resistor
35	RE 9530	1 meg., 1/4 W. resistor
36	RE 9531	1/4 meg., 1/4 W. resistor
37	CW 4-05	.05 mfd., 400 V. condenser
38		Tone control switch - part of SW 9546
39	CW 4-01	.01 mfd., 400 V. condenser
40	RE 9556	25 ohm, 1/4 W. resistor
41	RA 102564	350 ohm, 1 W. resistor
42	CE 9515	12 mfd., 25 V. electrolytic condenser
43	CE 9535	15 mfd., 300 V. electrolytic condenser
44	CE 9536	12 mfd., 450 V. electrolytic condenser
45	SK 9535	Speaker assembly
46	DM 9510	Diaphragm and voice coil assembly
47	TR 9559	Output transformer
48	TR 9558	Power transformer
49		On-Off switch - part of VR 9552
50	LP 9510	Dial light
51	RE 9579	9000 ohm, 1/4 W. resistor

Part #	Description of Parts
MAIN ASSEMBLIES	
CH 95101	Chassis assembly
SK 9535	Speaker
KA 9546	Cabinet
BRACKETS	
BK 95182	Filter condenser mounting bracket
TUBE SOCKETS & TUBE SHIELDS	
SE 956	Tube shield base
SV 954	Tube shield
SA 104617	Tube socket - 6 prong
SA 107257	Speaker socket
SO 956	Tube socket - 8 prong

ELECTRICAL SPECIFICATIONS

Type and Number of Tubes ..... 1 #6A8 , 1 #6K7 , 1 #7h, 1 #6F6 , 1 #5X3 - Total 5
Power Supply Characteristics ..... 105 to 125 volts, 50 to 60 cycle A.C.
Power Consumption ..... 46 Watts
Power Output ..... 3.0 Watts
Undistorted Power Output ..... 1.5 Watts
Tuning Range ..... 545 to 1725 KC., and 2100 to 7200 KC.
Line-Up Frequencies ..... 465 KC., 1700 KC., 600 KC., 6000 KC.

GENERAL DESCRIPTION

These models are five-tube, two-band superheterodyne receivers employing a type 6A8 tube as a combination first detector-oscillator, a type 6K7 tube as a first I.F. amplifier, a type 75 tube as a combination second detector - A.V.C. - first audio amplifier, a type 6F6 tube as an output amplifier and a type 5X3 tube as a rectifier.

These models are designed to operate over two bands on frequencies from 545 to 1725 KC. and 2100 to 7200 KC.

The model 605 is a table model while the model 605C is a console model using a larger speaker.

LINE-UP CAPACITOR ADJUSTMENTS

To align the circuits of this receiver it is essential to use a high grade modulated test oscillator, the output of which can be continuously varied with absence from overload when the individual circuits of the receiver are brought into alignment.

A conventional output meter can be connected across the terminals of the speaker voice coil to indicate when the circuits are aligned. The sensitivity of the output meter must be sufficient to give satisfactory reading with a low input signal.

Before attempting to align the receiver, the service man should familiarize himself with the general layout of the chassis, the location of the tubes and various alignment condensers. Top and bottom views of the chassis are shown in Figs. #1 and #2 and should be carefully studied before the actual work is started.

ADJUSTMENT OF I.F. (465 KC.)

1. Connect the output meter to the terminals of the speaker voice coil.
2. Set the volume control to maximum position and tone control to treble.
3. Apply the test signal to the grid of the type 6K7 I.F.tube through a .1 mfd. blocking condenser.
4. Adjust trimmer condenser #25 to maximum output.
5. Apply the test signal to the grid of the type 6A8 first detector-oscillator tube and adjust trimmer condensers #17 and #18 to maximum output.

ADJUSTMENT OF BROADCAST BAND

1. Apply test signal to antenna lead and with a strong input signal adjust wave trap trimmer condenser #4 to minimum output.
2. Apply test signal to the antenna lead through a .0002 mfd. condenser.
3. Set test oscillator and dial indicator to 1700 KC. and adjust oscillator trimmer condenser #11 until the signal is received.
4. Adjust preselector trimmer #3 to maximum output.
5. Set test oscillator and dial indicator to 600 KC. and adjust oscillator series condenser #12 to maximum output.
6. Return both test oscillator and dial indicator to 1700 KC. and check adjustment of oscillator and preselector trimmer condensers.

ADJUSTMENT OF S. W. BAND

1. Turn the wave change switch to the short-wave position.
2. Set the test oscillator and dial indicator to 6000 KC. and adjust oscillator trimmer condenser #10 until the signal is received.
3. Adjust the preselector trimmer condenser #2 to maximum output.
4. Check the receiver over scale for sensitivity and calibration.

Dia. #	Part #	Description of Parts
MISCELLANEOUS		
KK 9538		Knobs
GA 9510		Dial gasket
DE 9551		Dial scale
PL 9561		Plate to support dial
SO 9519		Dial lamp socket
CD 9512		Line cable
SF 9540		Spring clip on dial
DI 9545		Dial indicator
SH 9539		Dial drive shaft
PU 9516		Dial drive pulley
PU 9518		Dial pulley - on condenser shaft
SP 9539		Spring on dial drive belt
FR 97160		Dial drive belt
BG 9503		Dial drive shaft bearing

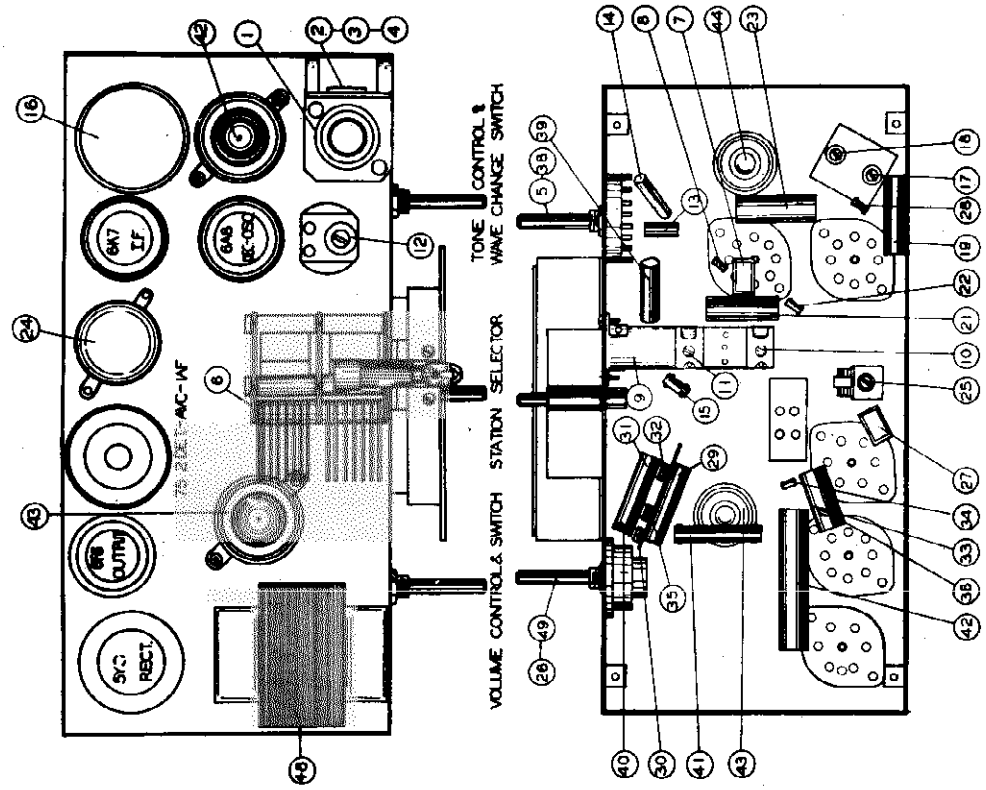

MODEL 605C

All service parts for Model 605 C are the same as for Model 605 except for the following parts:

Dia. #	Part #	Description of Parts
45	SK 9534	Speaker
46	SA 107282	Diaphragm and voice coil assembly
47	TR 9558	Output transformer

Part #	Description of Parts
MAIN ASSEMBLIES	
SK 9534	Speaker
KA 9547	Cabinet

©John F. Rider, Publisher

MODELS 620, 625
Preliminary
Schematic
Voltage

UNITED AMERICAN BOSCH CORP

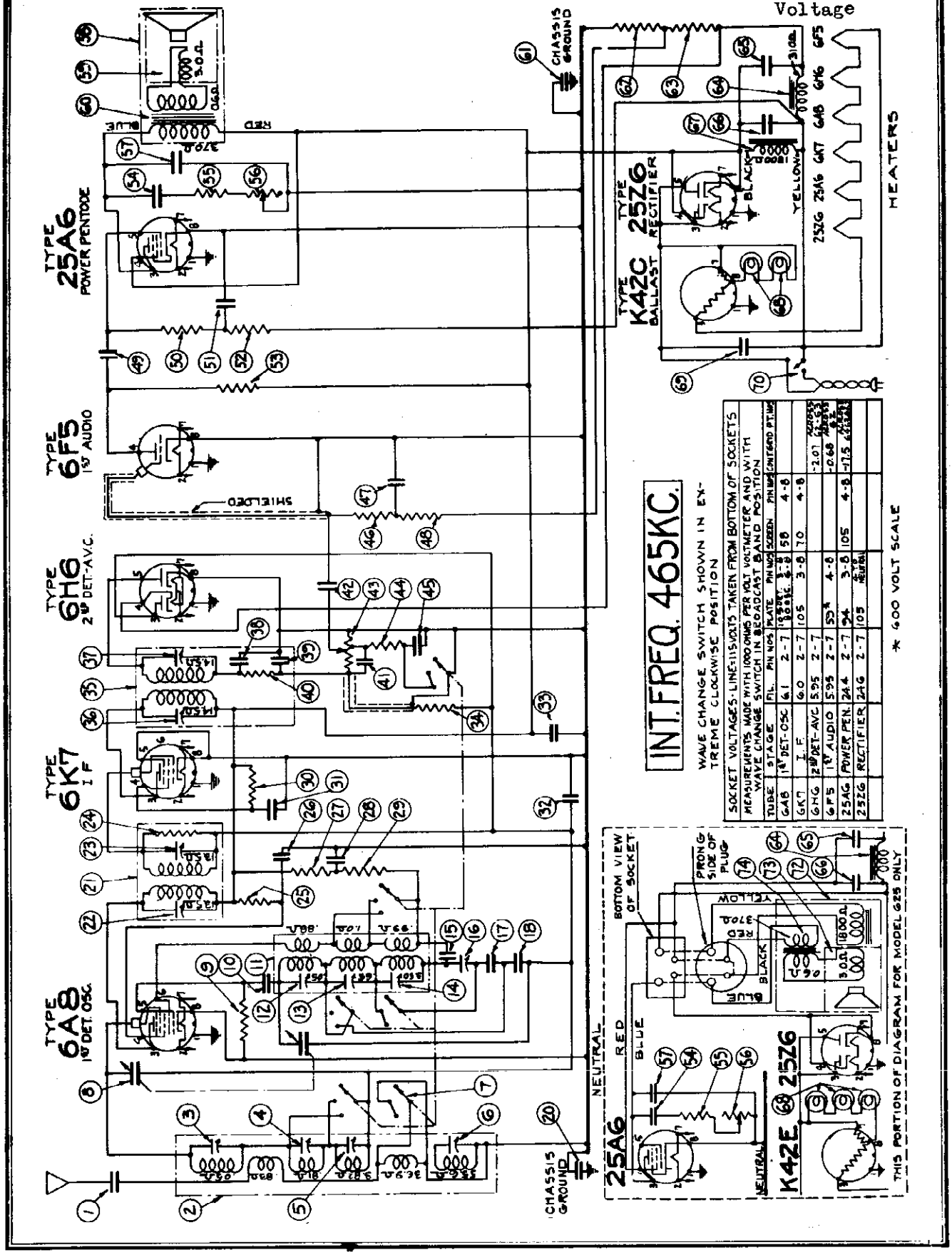

©John F. Rider, Publisher

MODELS 620,625
Preliminary
Socket,Trimmers
Alignment,Parts

UNITED AMERICAN BOSCH CORP.

ADJUSTMENT OF I.F. (465 K.C.)

1. Set the volume control to maximum position and tone control to treble position.
2. Connect the output meter to the terminals of the voice coil.
3. Set the test oscillator to 465 K.C. and apply the test signal to the grid of the 6K7 tube through a .1 mfd. blocking condenser.
4. Adjust trimmer condensers #26 and #27 to maximum output.
5. Apply the test signal to the grid of the 6A8 first detector-oscillator tube and adjust trimmer condensers #22 and #23 to maximum output.
6. Connect the test oscillator to the antenna and ground posts and repeat the input signal adjust wave trap trimmer condenser #6 to minimum output.

BROADCAST BAND ADJUSTMENT

1. Set the test oscillator and dial indicator to 1400 K.C.
2. Apply the test signal to the antenna of the receiver through a .0002 mfd. condenser.
3. Adjust oscillator trimmer condenser #24 and the padding condenser #25 to maximum output.
4. Adjust the antenna trimmer condenser #5 to maximum output.
5. Set test oscillator and dial indicator to 600 K.C. and adjust the padding condenser #21 to maximum output.
6. Return test oscillator and dial indicator to 1400 K.C. and check alignment of the oscillator and preselector trimmer condensers.

ADJUSTMENT OF GREEN BAND

1. Set the wave change switch to the green band position.
2. Set the test oscillator and dial indicator to 6000 K.C. and adjust the preselector trimmer condenser #13 until the signal is received.
3. Adjust the preselector trimmer condenser #14 for maximum sensitivity and calibration over scale.

ADJUSTMENT OF RED BAND

1. Set the wave change switch to the red band position.
2. Set the test oscillator and dial indicator to 15300 K.C. and adjust the preselector trimmer condenser #12 until the signal is received. Two positions may be found at which the signal may be received. Use the position which has the lower capacity trimmer setting, or with the alignment screw turned farther out.
3. Adjust the oscillator trimmer condenser #11 to 15000 K.C.
4. Check the receiver over scale for calibration and sensitivity.

MODEL 625

All service parts for Model 625 are the same as for Model 620 except for the following:

Ref.#	Part #	Description of Parts
43	TR 9539	1/2 meg. volume control
44	TR 9537	5000 ohm, 1/4 W. resistor
45	CM 5-05	.05 mfd., 200 V. condenser
46		On-off switch - part of TR 9535
772	RE 9535	Speaker assembly
773	RE 10C8015	Field coil assembly
74	TR 9536	Output transformer

Part #	Description of Parts
	MAIN ASSEMBLIES
CH 9510Z	Chassis assembly
RE 9541	Cabinet assembly
RE 9535	Speaker assembly

	MISCELLANEOUS
CA 9512	Dial gasket
MA 106339	Chassis mounting washers
MA 9542	Chassis mounting screws
DI 9543	Dial indicator assembly
DI 9544	Dial scale
DR 9540	Knob, wave change switch
PL 9542	Marking plate
DR 9542	Knob, tuning control
SK 9530A	Bracket over-all assembly
SK 9530B	Bracket mounting screws
SA 107278	Speaker plug
SA 107279	Speaker plug cover
SA 101740	Copper ring
SA 107287	Speaker socket

GENERAL DESCRIPTION

These models are seven-tube, three-band, A.C.-D.C. superheterodyne receivers. The circuits employ all metal tubes. A type 6A8 tube is used as a combined first detector-oscillator, a type 6K7 tube as an intermediate frequency amplifier and a type 6B7 tube as a second detector and automatic volume control. A type 6F6 as a first audio frequency amplifier, a type 25A6 as an output amplifier, a type 25Z6 as a rectifier and a type 6X5 as a ballast tube is in the Model 620 or a type 6X8 in the Model 625.

The Model 620 is a personal model with the speaker mounted on the chassis while the Model 625 is a console model using a larger separate speaker.

LINE-UP CAPACITOR ADJUSTMENTS

To align the circuits of this receiver it is essential to use a high grade modulated test oscillator, output meter and a set which can be continuously varied through the entire range of the individual circuits of the receiver are brought into alignment.

A conventional output meter can be connected across the terminals of the speaker voice coil to indicate when the circuits are aligned. The sensitivity of the output meter should be sufficient to give a satisfactory reading with low input signal.

Before attempting to align the receiver, the service man should familiarize himself with the general layout of the chassis, the location of the tubes and various adjustments. Top and bottom views of the chassis are shown in Figs. A and B, and a schematic diagram is provided for the actual work is started.

ELECTRICAL SPECIFICATIONS

Type and Number of Tubes ..... 1 #6A8, 1 #6K7, 1 #6B7, 1 #6F6, 1 #25A6, 1 #25Z6
in Model 625 - Total 7 ..... 1 #6X8 (Ballast) in Model 620, 1 #6X5 (Ballast)

Power Supply Characteristics .... 105-125 volts D.C. or 105-125 volts, 50-60 cycle A.C.
Maximum Power Consumption ..... 175 Watts
Maximum Undistorted Output ..... 1.0 Watts
Maximum Undistorted Output ..... 0.75 Watts

Tuning Ranges ..... (Black Band - 540 to 1550 K.C.
(Green Band - 1500 to 4600 K.C.
(Red Band - 4500 to 15000 K.C.

Line-Up Frequencies ..... I.F. 465 K.C., 1400 K.C., 600 K.C., 4000 K.C., 15000 K.C.

Ref.#	Part #	Description of Parts
1	RA 103775	.001 mfd. mica condenser
2	RC 98028	Preselector coil
3		1-25 mmf. trimmer condenser - part of RC 98028
4		1.5-10 mmf. trimmer condenser - part of RC 98028
5		1.5-10 mmf. trimmer condenser - part of RC 98028
6		30-60 mmf. trimmer condenser - part of RC 98028
7		Wave change switch
8	CM 2545	750 ohm, 1/4 W. resistor
9	CM 9543	50,000 ohm, 1/4 W. resistor
10	RE 9541	Oscillator coil assembly
11	RA 106417	.0001 mfd. mica condenser
12	RC 98029	Oscillator coil assembly
13		1-25 mmf. trimmer condenser - part of RC 98029
14		1.5-10 mmf. trimmer condenser - part of RC 98029
15		1.5-10 mmf. trimmer condenser - part of RC 98029
16	CM 4-005	.005 mfd., 400 V. condenser
17	CM 9545	300-400 mmf. oscillator series condenser
18	CM 9525	.002 mfd. mica condenser
19	CM 9526	.0025 mfd. mica condenser
20	CM 6-10	.1 mfd., 600 V. condenser
21	IC 9575	1st I.F. coil
		30-100 mmf. trimmer condenser - part of IC 9575
		30-100 mmf. trimmer condenser - part of IC 9575
		500,000 ohm, 1/4 W. resistor - part of IC 9575
22	RE 9535	Speaker assembly
23	CM 2-05	.05 mfd., 200 V. condenser
24	CM 9546	4000 ohm, 1/4 W. resistor
25	RA 106849	6000 ohm, 1/4 W. resistor
26	RE 9568	25,000 ohm, 1/4 W. resistor
27	CM 2-05	.05 mfd., 200 V. condenser
28	CM 2-10	.1 mfd., 200 V. condenser
29	CM 2-10	.1 mfd., 200 V. condenser
30	RE 9577	2 meg., 1/2 W. resistor
31	RE 9574	Second I.F. coil
32		30-100 mmf. trimmer condenser - part of IC 9574
33		30-100 mmf. trimmer condenser - part of IC 9574
34		50,000 ohm, 1/4 W. resistor - part of IC 9574
35		.0001 mfd. mica condenser - part of IC 9574
36		.0001 mfd. mica condenser - part of IC 9574
37		60,000 ohm, 1/4 W. resistor - part of IC 9574
38	CM 4-005	.005 mfd., 400 V. condenser
39		.005 mfd., 400 V. condenser
40		.1 meg. volume control
41	CM 4-005	.005 mfd., 400 V. condenser
42		.1 meg. volume control
43	VR 9533	25,000 ohm, 1/4 W. resistor
44	RE 9568	25,000 ohm, 1/4 W. resistor
45	RE 9572	500,000 ohm, 1/4 W. resistor
46	CM 2-10	.1 mfd., 200 V. condenser
47	RE 9570	500,000 ohm, 1/4 W. resistor
48	CM 4-01	.01 mfd., 400 V. condenser
49	TR 9538	500,000 ohm, 1/4 W. resistor
50	CM 6-10	1 mfd., 600 V. condenser
51	VR 9534	Tone control
52	CM 4-01	.01 mfd., 400 V. condenser
53	SK 10C8	Speaker
54	RA 106417	Oscillator coil and trimmer coil
55	TR 9534	Output transformer
56	CM 6-10	.1 mfd., 600 V. condenser

©John F. Rider, Publisher

UNITED AMERICAN BOSCH CORP.

MODELS 636, 637
Schematic, Voltage
Coil Data, Parts

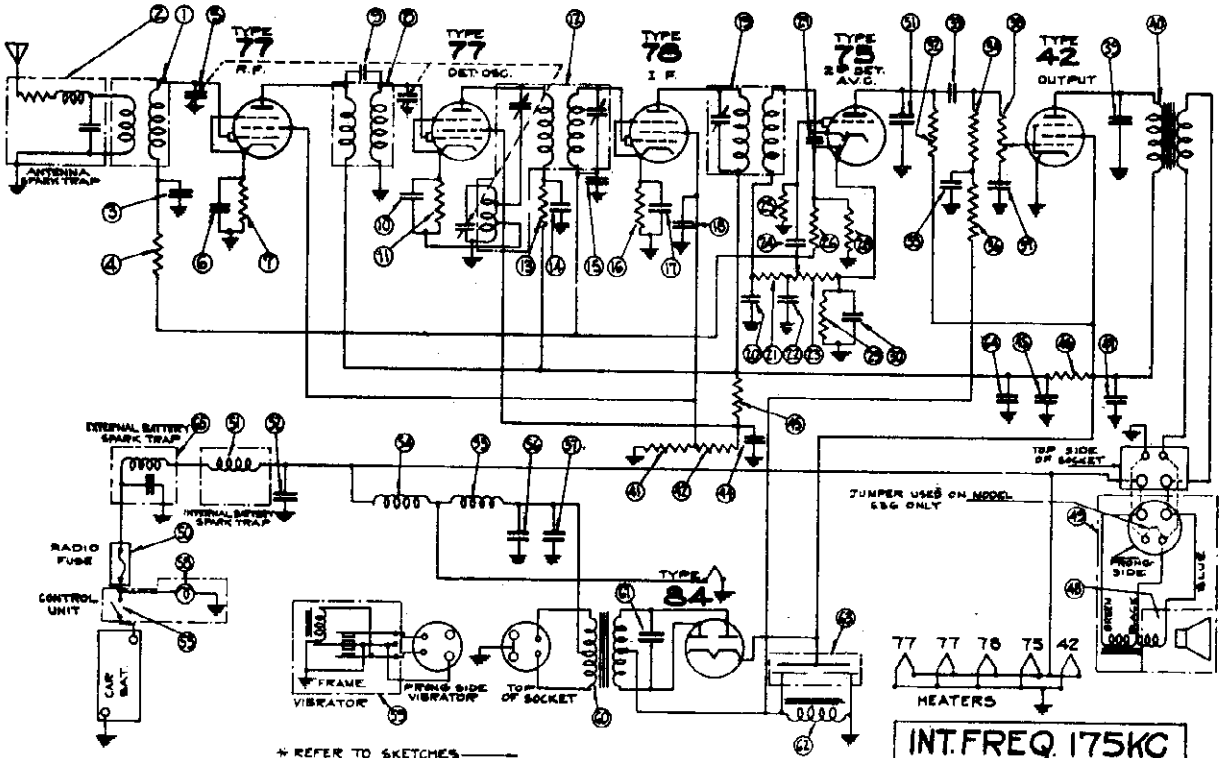

* REFER TO SKETCHES

PART	FUNCTION	WINDING RESISTANCE PRIMARY RESIST.	PRIMARY IDENT ☆	SECONDARY RESIST.	SECONDARY IDENT ☆
(1)	ANT COIL	2 Ω	A To B	2.5 Ω	E To F
(6)	RF COIL	12 Ω	L To G	4 Ω	H To J
(12)	OSCILLATOR	6 Ω	M To P		
(17)	1ST I.F.	70 Ω	R To BLUE	6 Ω	BLACK To GREEN
(9)	2ND I.F.	90 Ω	RED To BLUE	86 Ω	GREEN To BLACK
(40)	OUTPUT	550 Ω	GREEN To BROWN		
(42)	CHOKE	325 Ω	BLACK To GND		
(26)	POWER	3 Ω	BLACK To GREEN	8 Ω	RED To BLUE

SOCKET VOLTAGE

TUBE	STAGE	FIL.	PLATE	CATH.	SCREEN	
77	RF	6.0	186	18	84	
77	DET-OSC	6.0	185	9	135	
78	I.F.	6.0	190	6.5	84	
75	2ND DET	6.0	117	15		
42	OUTPUT	6.0	226	0	242	-15
84	RECTIFIER	6.0				

NOTE: ALL VOLTAGE READINGS WITH A VOLT METER HAVING A RESISTANCE OF 1000 Ω PER VOLT

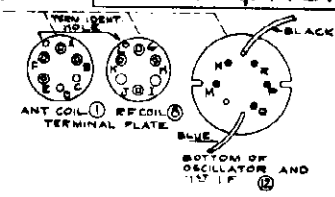

SERVICE PARTS LIST MODEL 636

Dia. #	Part #	Description
1	RC 95128	Antenna coil
2	GC 958	Antenna spark trap
3	SA 106366	.05 mfd. 200 V. cond.
4	SA 105278	100,000 ohm ½ W. res.
5	CG 9542	3 gang condenser
6	SA 106366	.05 mfd. 200 V. cond.
7	SA 105264	600 ohm ½ W. resistor
8	RC 95130	R.F. coil
9		Twisted wire
10	SA 103652	.002 mfd. 600 V. cond.
11	SA 105247	7500 ohm ½ W. resistor
12	RC 95132	Composite coil
13	SA 105265	2000 ohm ½ W. resistor
14	SA 102492	.05 mfd. 400 V. cond.
15	SA 106366	.05 mfd. 200 V. cond.
16	SA 105270	2500 ohm ½ W. resistor
17	SA 102497	.25 mfd. 200 V. cond.
18	CW 951	.1 mfd. 200 V. cond.
19	IC 951	I.F. coil
20	CM 9515	.0001 mfd. mica cond.
21	SA 105276	50,000 ohm ½ W. res.
22	CM 9515	.0001 mfd. mica cond.
23	VR 9524	Volume control
24	SA 103659	.005 mfd. 400 V. cond.
25	SA 105281	1 meg. ½ W. resistor
26	SA 105246	½ meg. ½ W. resistor
27	CM 9513	.0001 mfd. mica cond.
28	SA 105246	½ meg. ½ W. resistor
29	SA 105249	5000 ohm ½ W. res.
30	SA 102497	.25 mfd. 200 V. cond.
31	SA 103652	.002 mfd. 600 V. cond.
32	SA 105278	100,000 ohm ½ W. res.
33	SA 103659	.005 mfd. 400 V. cond.
34	SA 105279	½ meg. ½ W. resistor
35	CW 951	.1 mfd. 200 V. cond.
36	SA 105270	½ meg. ½ W. resistor
37	SA 106403	.001 mfd. 600 V. cond.
38	VR 9525	Tone control
39	CW 952	.005 mfd. 600 V. cond.
40	TR 952	Output transformer
41	SA 105277	75,000 ohm ½ W. res.
42	SA 105274	20,000 ohm ½ W. res.
43	SA 105274	20,000 ohm ½ W. res.
44	SA 102492	.05 mfd. 400 V. cond.
45	SA 102496	.25 mfd. 400 V. cond.
46	SA 107572	5000 ohm 1 W. res.
47	CM 951	.001 mfd. mica cond.
48	DM 951	Speaker diaphragm
49	SK 955	Speaker
50	FU 951	Fuse (20 amperes)
51	RC 9512	Filter choke
52	CM 953	.00005 mfd. mica cond.
53	SW 9539	Switch assembly complete less cables
54	SA 105452	Filter choke
55	SA 105452	Filter choke
56	CW 958	.5 mfd. 200 V. cond.
57	CW 956	.8 mfd. 200 V. cond.
58	LP 956	Pilot light - 6 V.- .20 amperes)
59	VI 951	Vibrator
60	TR 953	Power transformer
61	SA 108804	.008 mfd. 1800 V. cond.
62	TR 951	"B" choke
63	CE 951	6 & 10 mfd. electrolytic condenser
64	CM 951	.001 mfd. mica cond.
65	CC 959	Spark trap

Part #	Description
	MAIN ASSEMBLIES
CH 9582	Chassis assembly
CU 9617	Tuning unit (less shafts)
SK 955	Speaker
	NUTS
FF 106659	Thumb nut for ant. & bat. cable
NT 104935	Nut for mounting studs
	SCREWS AND STUDS
FP 104892	Thumb screws on housing cover
FP 106571	Mounting studs
SC 1828CA	Self-tapping screw (#6 x 1" long)
SC 101700	Self-tapping screw (#7 x ¼" long)
	TUBE SOCKETS & TUBE SHIELDS
SA 104617	Tube socket - 6 prong
SA 104616	Tube socket - 5 prong
SO 955	Tube socket - 4 prong
BH 956	Base for tube shield
CV 954	Tube shield - long
CV 9516	Tube shield - short

Part #	Description
	WASHERS, BUSHINGS & SPACERS
WA P-12 CA	Mounting washer
WA 7-10	Mounting lock washer
IS 1002	Rubber bushing for variable condenser
FP 104086	Spacer for speaker plug
SH 955	Spacer for variable condenser rubber bushing
	SPEAKER PARTS (SK 955)
CL 9515	Speaker field coil
DM 951	Diaphragm & voice coil assy.
FA 956	Silk speaker grill cloth
CB 9525	Speaker cable with 4 prong plug
SA 107279	Cover for speaker plug
SA 107278	Speaker plug
	MISCELLANEOUS
SH 9557	Variable condenser shaft with pinion
KT 956	Spark plug suppressor kit
DS 956	Dial indicator disc
DS 9547	Glass dial scale
SP 9557	Spring for dial glass
GA 959	Gasket for dial glass
SW 9541	Switch assembly complete with cables

MODEL 637

All parts for Model 637 same as for Model 636 except for the following parts:

Dia. #	Part #	Description
49	SK 9522	Header speaker
		MAIN ASSEMBLIES
	SK 9522	Header speaker
		MISCELLANEOUS
	CB 9576	Speaker cable
	CB 956	Internal speaker cable

ELECTRICAL SPECIFICATIONS

Type and Number of Tubes ---------- 2 #77, 1 #78, 1 #42, 1 #84 - Total 6
Battery Current (6.3 Volt Battery) ---------- 6.5 Amperes
Tuning Range ---------- 540 to 1720 K.C.
Maximum Undistorted Output ---------- 3.0 Watts
Maximum Output ---------- 5.0 Watts
Line-Up Frequencies ---------- I.F. 175 K.C., 1400 K.C.

©John F. Rider, Publisher

MODELS 636,637
Socket,Trimmers
Chassis,Alignment
Vibrator Adjustment

UNITED AMERICAN BOSCH CORP.

Figure No. 2

LINEUP CAPACITOR ADJUSTMENTS

All the adjustable capacitors, commonly called trimmer condensers, are very accurately adjusted at the factory and will not need any further adjustment unless a coil or I.F. transformer is changed or the adjustments are tampered within the field. Therefore, DO NOT attempt to change the setting of any of the trimmer condensers unless it is definitely known that adjustment is necessary, and a high grade modulated test oscillator is available. In such a case, proceed as follows, referring to Fig. #2.

1. Set test oscillator to 175 K.C.

2. Set condenser gang to approximately 600 K.C. This will be at a point where the condenser plates are nearly all in mesh.

3. Connect output meter across voice coil of speaker. This may be done by connecting one lead of the output meter to the high side of the speaker terminal strip and the other lead to the frame of the chassis. The impedance of the voice coil is 3. ohms.

4. Apply test signal to grid of 78 R.F. tube thru a .5 mfd. blocking condenser and adjust trimmer "i" to maximum output reading output of test oscillator as required.

6. Apply test signal to grid of 77 first detector-oscillator and adjust trimmers "g" and "h" to maximum output.

6. Set test oscillator to 1500 K.C. and rotate condenser gang until the plates are wide open. Insert a piece of paper (approx. .01 thick) between the rotor and stator plates at dcwn to this spacing. This is the exact setting of the condenser gang for the receiver oscillator at 1500 K.C. and should be carefully set as the resultant alignment of the receiver is directly dependent upon it.

7. Adjust trimmer "b" to maximum output and then remove the paper gauge.

8. Set test oscillator and condenser gang to 1400 K.C.

9. Apply test signal to grid of 77 R.F. tube and adjust trimmer "g" to maximum output.

10. Apply test signal to antenna lead thru a .0002 mfd. condenser and adjust trimmer "a" to maximum output.

11. Check sensitivity at several points.

Figure No. 3

INSTRUCTIONS FOR ADJUSTING VIBRATOR

After the vibrator has been in use for some time, it may refuse to start operating. This indicates worn tungsten contact points. Since a reserve supply of tungsten is available, a simple adjustment can be made to prolong the life of the vibrator.

1. Remove the vibrator unit from its housing by removing the tension spring with a pair of round nosed pliers.

2. Remove the rubber sock, being careful not to bend the wires at the soldered connections.

3. Lay the vibrator on a piece of white paper so that when viewed from above it appears exactly as shown in Fig. 1.

Figure No. 1

4. Loosen lock nut "k" and turn screw "g" clockwise until .006" of light can be seen between contacts "c" and "d". If the contact points are somewhat roughened, light cannot be seen across their entire diameter, even though they are correctly replaced, that is within .005" of touching each other.

5. A simple check on the correctness of the spacing adjustment is obtained by pressing lightly against the center of the reed with a small nail in the direction and location shown by arrow "g". When the reed is thus moved so as to close contacts "c" and "d", the weight "g" on the free end of the reed should move 1/64" from its "at rest" position. This check should be made after lock nut "k" has been firmly retightened.

6. Do not readjust the spacing between contacts "c" and "d" unless the tungsten is nearly all worn away. In this case, re-adjustment may be made the same as for contacts "c" and "d".

7. In re-inserting the vibrator into its rubber sock, be very careful to turn the "plate" of the sock hole so that they are parallel to the flat side of the vibrator frame. This provides ample space in the sock for the free movement of the reed. Make certain that the slot in the prong terminal plate engages the small projection on the inside edge of the housing. Then replace the tension spring.

INSTRUCTIONS DO NOT APPLY TO ANY OTHER TYPES OF VIBRATORS.

©John F. Rider, Publisher

MODEL 640
Preliminary
Schematic
Voltage

UNITED AMERICAN BOSCH CORP.

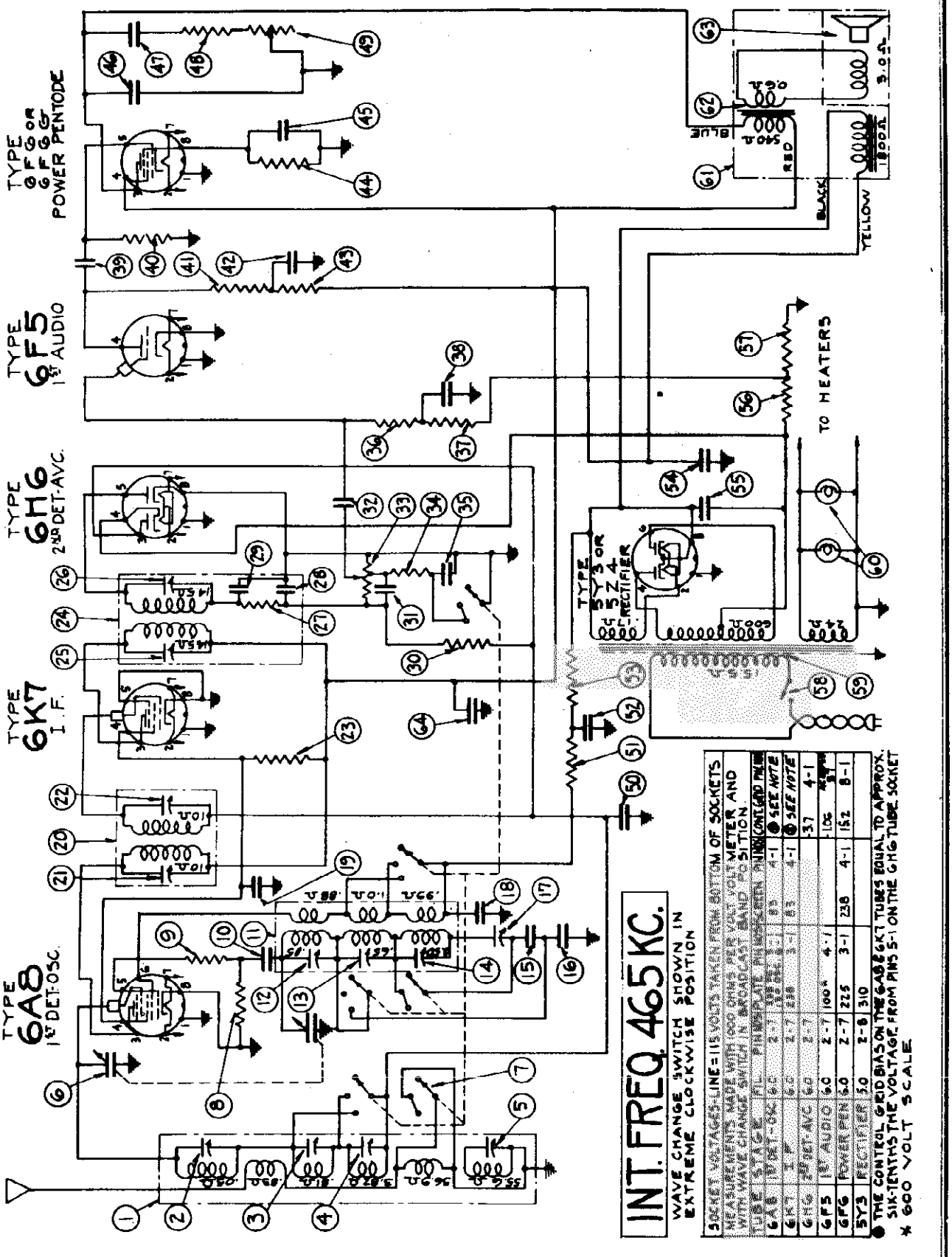

©John F. Rider, Publisher

MODEL 640
Preliminary
Socket, Trimmers
Alignment, Parts

UNITED AMERICAN BOSCH CORP.

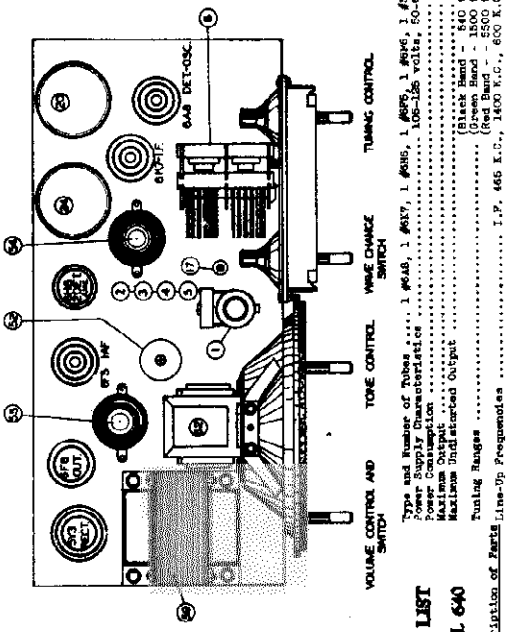

Type and Number of Tubes ..... 1 #6A8, 1 #6K7, 1 #6F5, 1 #6F6, 1 #6X5 - Total 5
Power Supply Characteristics ..... 105-125 volts, 50-60 cycle A.C.
Power Consumption ..... 47 Watts
Maximum Output ..... 5 Watts
Maximum Undistorted Output ..... 2.4 Watts
(Black Band - 540 to 1650 K.C.
(Green Band - 1500 to 4500 K.C.
Tuning Ranges ..... (Red Band - 4500 to 16500 K.C.
Description of Parts Line-Up Frequencies ..... I.F. 465 K.C., 600 K.C., 1400 K.C., 4000 K.C.

PARTS LIST
MODEL 640

Description of Parts

	Dia.#	Part #
Preselector coil assembly	1	RC 96602
Trimmer condenser - 1.5-10 mmf. - part of RC 96602	2	
Trimmer condenser - 1.5-10 mmf. - part of RC 96602	3	
Trimmer condenser - 1.5-10 mmf. - part of RC 96602	4	
Trimmer condenser - 30-60 mmf. - part of RC 96602	5	
Variable tuning condenser	6	CG 9649
Wave change switch	7	RW 9546
50,000 ohm, 1/4 W. resistor	8	RS 9568
200 ohm, 1/4 W. resistor	9	RR 9862
.0001 mfd. mica condenser	10	SA 106417
Oscillator coil assembly	11	RC 96603
Trimmer condenser - 4-25 mmf. - part of RC 96603	12	
Trimmer condenser - 1.5-10 mmf. - part of RC 96603	13	
Trimmer condenser - 1.5-10 mmf. - part of RC 96603	14	
.0027 mfd. mica condenser	15	CM 9826
.0034 mfd. mica condenser	16	CM 9524
300-600 mmf. Lg condenser	17	CS 9545
.005 mfd. 400 V. condenser	18	CM 4-005
.1 mfd., 200 V. condenser	19	CM 4-10
First I.F. coil assembly	20	RC 96672
Trimmer condenser - 45-135 mmf. - part of RC 96672	21	
Trimmer condenser - 45-135 mmf. - part of RC 96672	22	
Trimmer condenser - 45-135 mmf. - part of RC 96672	23	
40,000 ohm, 1/4 W. resistor	24	
Second I.F. coil assembly	25	SA 106251
Trimmer condenser - 30-100 mmf. - part of RC 9674	26	RC 9674
Trimmer condenser - 30-100 mmf. - part of RC 9674	27	
Trimmer condenser - 30-100 mmf. - part of RC 9674	28	
90,000 ohm, 1/4 W. resistor - part of RC 9674	29	
.0001 mfd. mica condenser - part of RC 9674	30	
2.5 meg., 1/2 W. resistor	31	
Antenna coil assembly	32	RW 9677
Volume control, 1 meg.	33	CW 4-05
.02 mfd. 400 V. condenser	34	VR 9533
25,000 ohm, 1/4 W. resistor	35	RS 9568
.01 mfd., 400 V. condenser	36	CW 4-01
.1 meg., 1/4 W. resistor	37	RS 9674
1,000 ohm, 1/4 W. resistor	38	RS 9565
.05 mfd., 200 V. condenser	39	CW 2-05
.02 mfd., 400 V. condenser	40	CW 4-02
.5 meg., 1/4 W. resistor	41	RS 9672
250,000 ohm, 1/4 W. resistor	42	RS 9831
2 mfd., 200 V. condenser	43	CW 2-2
1 meg., 1/4 W. resistor	44	RS 9566
500 ohm, 1 W. resistor	45	SA 107891
10 mfd., 25 V. condenser - part of CE 9657	46	
.006 mfd., 400 V. condenser	47	CW 4-006
2000 ohm, 1/4 W. resistor	48	RS 9560
.05 mfd., 400 V. condenser	49	CW 4-05
25 mfd., 25 V. electrolytic condenser	50	CE 9657
.05 mfd., 400 V. condenser	51	CW 4-05
12,000 ohm, 1/4 W. resistor	52	RS 9556
65 ohm, 1/4 W. resistor	53	RS 9589
25 ohm, 1/4 W. resistor	54	RR 9566
On-off switch - part of VR 9533	55	
Power transformer	56	PT 9545

	Part #
6A8 tube	RC 96601
6K7 tube	RC 96602
6F5 tube	RC 96603
6F6 tube	RC 96135
6X5 tube	CE 96104
Socket	RA 9540
Speaker	RE 9656

	Part #
Dial lamp	CE 9631
Dial lamp assembly	RA 9545
Output transformer	RA 107857
Diaphragm and voice coil assembly	RA 106217
.1 mfd., 400 V. condenser	CW 4-10

Description of Parts

MAIN ASSEMBLIES

	Part #
Chassis assembly	
Cabinet	
Speaker	RE 9656

BRACKETS, CLIPS AND CLAMPS

	Part #
Dial mounting bracket on variable condenser	RE 96801
Bracket over dial scale	RE 96202
Bracket for preselector coil mounting	RE 96202
Small electrolytic condenser mounting bracket	RE 95135

CABLES AND CABLE ASSEMBLY

	Part #
Antenna and ground cables	CB 9541
Line cord assembly	CB 9551
Copper braid	FR 106888
Dial drive belt	FR 97180

SCREWS AND NUTS

	Part #
Felt foot and chassis mounting screw	AC 953
Dial indicator set screw	AC 97061
Set screw for pulley	AC 106441

WASHERS, BUSHINGS AND SPACERS

	Part #
Chassis mounting washers	RA 106539
Spacer for variable condenser mounting	AE 965
Spacer for vernier drive mounting	AE 9819 GA

MISCELLANEOUS

	Part #
Dial gasket	GA 9631
Knob - spring type	KA 9651
Knob - set screw type	KA 9563
Dial lamp socket	AA 9650
Dial scale	AA 9644
Dial indicator	AA 9645
Dial pointer assembly	AA 9643
Pulley - dial drive	PU 9546
Vernier drive assembly	PU 9819
Spring for dial scale	RE 9640
Spring for vernier drive	RE 9640
Rubber bushing - condenser mounting	RB 1038
Tube socket - 8 prong	AA 9648
Copper washer assembly	AA 107975

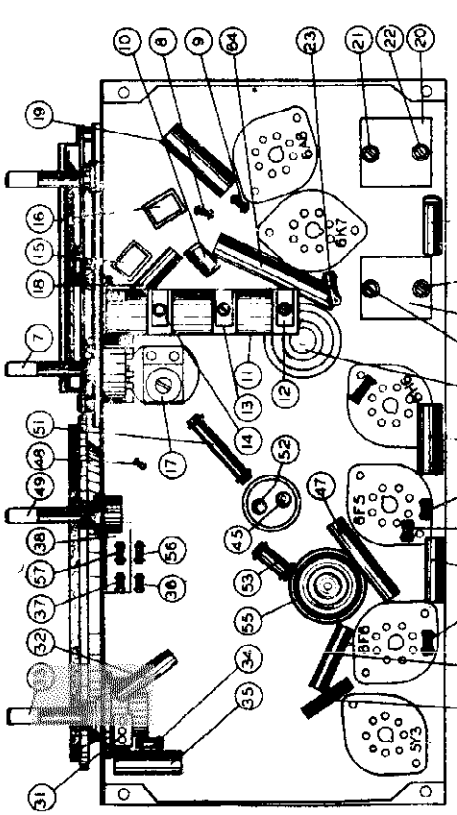

ADJUSTMENTS OF BROADCAST BAND
(540 to 1650 K.C.)

GENERAL DESCRIPTION

This model is a six-tube, three-band, superheterodyne receiver employing a metal tube. The circuit includes a type 6A8 tube as a combined first detector-oscillator, a type 6K7 tube as an intermediate frequency amplifier, a type 6B8 tube as a second detector and automatic volume control, a type 6F5 tube as a first audio amplifier, a type 6F6 tube as an output amplifier, and a type 5Y3 tube as a rectifier.

LINE-UP CAPACITOR ADJUSTMENTS

To align the circuits of this receiver it is essential to use a high grade modulated test oscillator, the output of which can be continuously varied with absence from overload, when the individual circuits of the receiver are brought into alignment. A vacuum tube voltmeter connected across the terminals of the speaker voice coil to indicate when the circuits are aligned. The sensitivity of the output meter must be sufficient to give satisfactory reading with a low input signal.

Before attempting to align the receiver, the service man should familiarize himself with the general layout of the chassis, the location of the tubes and various adjustment condensers. Turn the volume control to maximum position and set the wave change switch to the position which will be used in aligning the receiver.

ADJUSTMENT OF I.F. (465 K.C.)

1. Set volume control to maximum position.
2. Connect output meter across voice coil of speaker.
3. Set test oscillator to 465 K.C., and apply signal to grid of 6K7 I.F. tube through a .1 mfd. blocking condenser.
4. Adjust trimmers #21 and #22 to maximum output, reducing output of test oscillator as required.
5. Apply test signal to grid of 6A8 first detector through .1 mfd. condenser. Adjust trimmers #21 and #22 to maximum output.
6. Apply test signal to antenna of receiver.
7. Adjust trap coil trimmer #6 to minimum output.

ADJUSTMENT OF BROADCAST BAND

1. Set wave change switch to broadcast band position.
2. Set test oscillator and dial indicator to 1400 K.C.
3. Apply the test signal to the antenna of the receiver through a .0002 mfd. blocking condenser and adjust the oscillator trimmer condenser #24 until the signal is received.
4. Adjust the preselector trimmer #4 to maximum output.
5. Set test oscillator and dial indicator to 600 K.C. and adjust the oscillator series condenser #17 until the signal is received. Tune the variable condenser to a slightly lower frequency and readjust trimmers #21, #22 and #24 to maximum. Repeat this trial and error method in the same direction until no further improvement in sensitivity can be made. If the sensitivity decreases, try this adjustment at slightly higher frequencies.

ADJUSTMENT OF GREEN BAND

1. Set the wave change switch to the green band position.
2. Set the test oscillator and dial indicator to 4000 K.C. and adjust the oscillator trimmer condenser #13 until the signal is tuned in.
3. Adjust the preselector trimmer condenser #3 for maximum output.
4. Check the sensitivity and calibration over scale.

ADJUSTMENT OF RED BAND

1. Set the wave change switch to the red position.
2. Set the test oscillator and dial indicator to 15000 K.C. and adjust the oscillator trimmer condenser #14 to tune in the signal is received. Two positions may be found at which the signal may be tuned in. Use the position with the lower capacity trimmer setting or with the alignment screw turned farther out.
3. Adjust the preselector trimmer #5 to maximum output.
4. Adjust trap coil trimmer over note for oscillation and sensitivity.

©John F. Rider, Publisher

MODEL 650
Preliminary
Schematic
Voltage

UNITED AMERICAN BOSCH CORP.

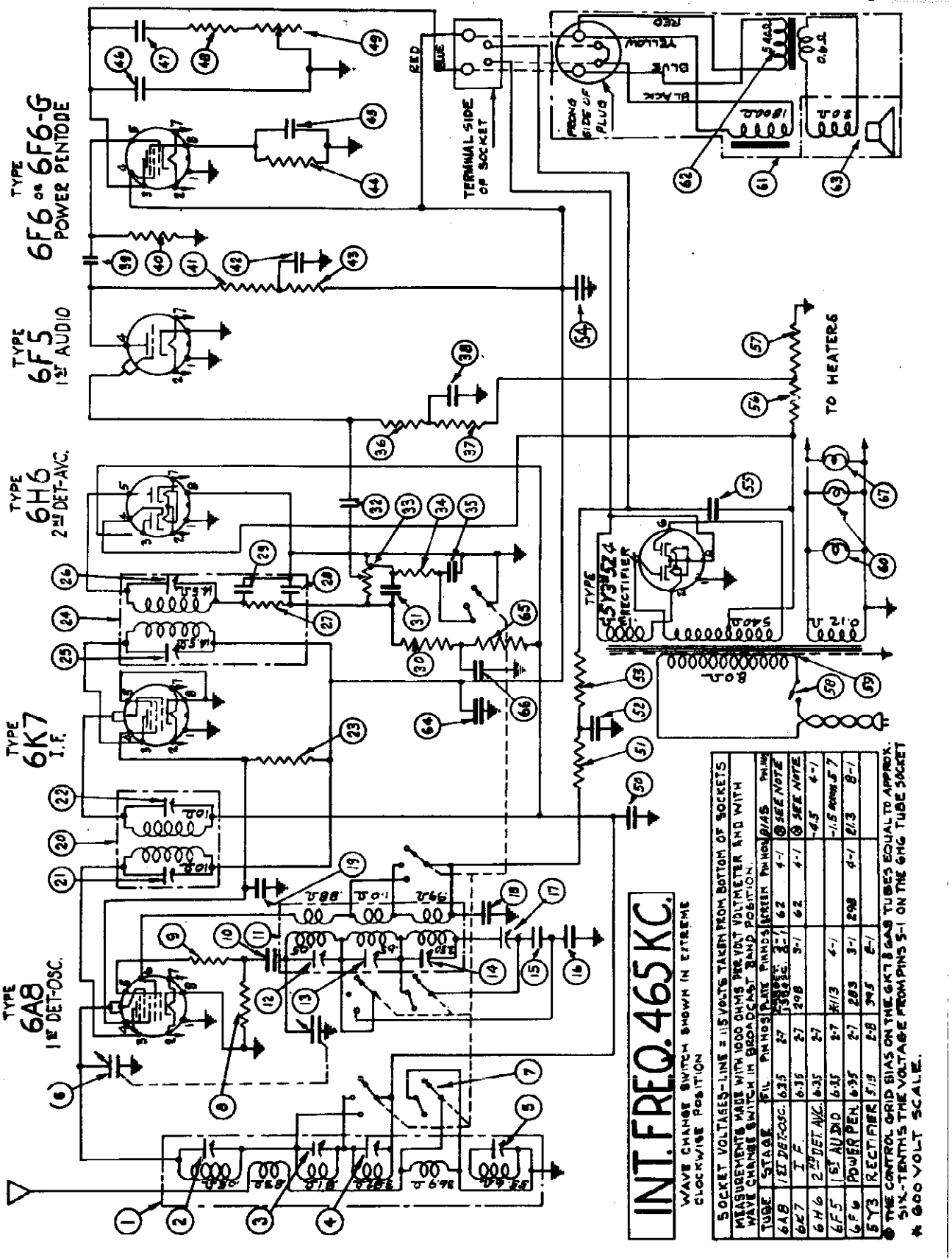

SOCKET VOLTAGES—LINE = 115 VOLTS TAKEN FROM BOTTOM OF SOCKETS
MEASUREMENTS MADE WITH 1000 OHMS PER VOLT VOLTMETER AND WITH WAVE CHANGE SWITCH IN BROADCAST BAND POSITION.

TUBE	STAGE	FIL.	PIN NOS. PLATE	PIN NOS. SCREEN	PIN NOS.	BIAS	PIN NO.
6A8	1ST DET-OSC.	6.3	250	100*	5-1	4-1	● SEE NOTE
6K7	I.F.	6.3	250	100*	5-1	4-1	● SEE NOTE
6H6	2ND DET. AVC.	6.3	2-7			-4.5	4-1
6F5	1ST AUDIO	6.3	2-7	1-1	4-1	-1.5 thru -7	
6F6	POWER PEN.	6.3	2-7	285	3-1	290	4-1
5Y3	RECTIFIER	5.0	2-8	345	6-1	8.3	8-1

● THE CONTROL GRID BIAS ON THE 6K7 & GAS TUBES EQUAL TO APPROX. SIX-TENTHS THE VOLTAGE FROM PINS 5-1 ON THE 6H6 TUBE SOCKET
* 600 VOLT SCALE.

©John F. Rider, Publisher

MODEL 650
Preliminary
Socket,Trimmers
Alignment,Parts

UNITED AMERICAN BOSCH CORP.

AMERICAN-BOSCH RADIO MODEL 650

Six-Tube, Three-Band, Superheterodyne Receiver

SERVICE NOTES

ELECTRICAL SPECIFICATIONS

Type and Number of Tubes ..... 1 6A8, 1 6K7, 1 6K8, 1 6Q7, 1 6V6 - Total 6
Power Supply Characteristics ..... 105-125 volts, 50-60 cycle A.C.
Power Consumption ..... 62 Watts
Maximum Output ..... 3.5 Watts
Maximum Undistorted Output ..... 2.5 Watts
Tuning Ranges ..... (Short Band - 540 to 1540 K.C.
(Green Band - 1500 to 4500 K.C.
(Red Band - 5500 to 16500 K.C.
Line-Up Frequencies ..... I.F. 465 K.C., 1400 K.C., 600 K.C., 4000 K.C.

GENERAL DESCRIPTION

This model is a six-tube, three-band, superheterodyne receiver whose circuits employ six-GA tubes. The tube complement includes as a mixer-first detector-oscillator, a type 6A8 tube as an intermediate frequency amplifier, a type 6K8 tube as a second detector and automatic volume control, a type 6Q7 tube as an audio amplifier, a type 6V6 tube as an output amplifier, and a type 5Y3 tube as a rectifier.

LINE UP CAPACITOR ADJUSTMENTS

To align the circuits of this receiver it is essential to use a high grade modulated test oscillator, the output of which can be controlled and reduced to a low value when the individual circuits of the receiver are brought into alignment. A conventional output meter should be connected across the terminals of the speaker voice coil to indicate the output when aligning the circuits. The output meter must be sufficient to give satisfactory reading with a low input signal.

Before attempting to align the receiver, the service man should familiarize himself with the general layout of the chassis, the location of the tubes and various alignment condensers. Top and bottom views are shown in the illustrations on page #2 and should be carefully studied before the actual work is started.

ADJUSTMENT OF I.F. (456 K.C.)

1. Set volume control to maximum position.
2. Connect output meter across voice coil of speaker.
3. Set test oscillator to 465 K.C., and apply it to 6A8 first detector grid through a 0.2 mfd. blocking condenser.
4. Adjust trimmers #26 and #26 to maximum output, reducing output of test oscillator as required.

1. Set the wave change switch to the red band position.
2. Set the test oscillator and dial indicator to 1500 K.C. and adjust the oscillator trimmer #25 until the output signal is received. Two positions may be found at which the signal may be tuned in with the trimmer set, with the lower capacity trimmer setting being the correct one.
3. Adjust the preselector trimmer #6 to the alignment screw tuned farther out.
4. Repeat the above operations until maximum output is obtained. Cover scale for calibration and sensitivity.

Description of Parts

	Dia.#	Part #
Preselector coil assembly		RC 98508
4-26 mmf., trimmer condenser - part of RC 98508	1	
26-80 mmf., trimmer condenser - part of RC 98508	2	
14-10 mmf., trimmer condenser - part of RC 98508	3	
10-30 mmf., trimmer condenser - part of RC 98508	4	
30-80 mmf., trimmer condenser - part of RC 98508	5	
Oscillator coil assembly		RC 98509
Variable condenser		CG 9545
Wave change switch		RW 9548
50,000 ohm, 1/4 W. resistor		RR 9571
200,000 ohm, 1/4 W. resistor		RR 9578
.0001 mfd. mica condenser		RI 108437
Oscillator coil assembly		RC 98505
4-26 mmf., trimmer condenser - part of RC 98505	11	
26-80 mmf., trimmer condenser - part of RC 98505	12	
14-10 mmf., trimmer condenser - part of RC 98505	13	
10-30 mmf., trimmer condenser - part of RC 98505	14	
.0027 mfd. mica condenser	15	CH 9525
.0004 mfd. mica condenser	16	CH 9564
500-800 mmf. mica condenser	17	CH 9548
.1 mfd., 200 V. condenser	18	CP 2-10
I.F. coil assembly (First)	19	XC 9572
4-26 mmf., trimmer condenser - part of XC 9572	20	
26-80 mmf., trimmer condenser - part of XC 9572	21	
14-10 mmf., trimmer condenser - part of XC 9572	22	
I.F. coil assembly (Second)		XC 9574
80-100 mmf. trimmer condenser - part of XC 9574	23	
50-100 mmf. trimmer condenser - part of XC 9574	24	
80,000 ohm, 1/4 W. resistor - part of XC 9574	25	
.0001 mfd. mica condenser - part of XC 9574	26	
1 meg., 1/4 W. resistor	27	RM 9574
.0005 mfd. mica condenser	28	CM 9519
.02 mfd., 400 V. condenser	29	CP 4-02
1,000 ohm, 1/4 W. resistor	30	RM 9557
.05 mfd., 200 V. condenser	31	CP 2-05
1 meg., 1/4 W. resistor	32	RM 9574
50,000 ohm, 1/4 W. resistor	33	RM 9576
.02 mfd., 400 V. condenser	34	CP 4-02
.02 mfd., 400 V. condenser	35	CP 4-02
.5 meg., 1/4 W. resistor	36	RM 9580
.25 meg., 1/4 W. resistor	37	RM 9577
.1 mfd., 200 V. condenser	38	CP 2-10
800 ohm, 1/4 W. resistor	39	RM 9551
10 mfd. electrolytic condenser - part of CE 9537	40	CE 4-008
.005 mfd., 400 V. condenser	41	CP 4-05
.02 mfd., 400 V. condenser	42	CP 4-02
.05 mfd., 200 V. condenser	43	CP 2-05
80,000 ohm, 1/4 W. resistor	44	RM 9554
50,000 ohm, 1 W. resistor	45	RW 9554
8 mfd. electrolytic condenser - part of CE 9537	46	CE 4-08
10 mfd. electrolytic condenser - part of CE 9537	47	CE 4-10
12 mfd., 450 V. electrolytic condenser - part of CE 9535	48	CE 4-12
56 ohm, 1/4 W. resistor	49	RM 9599
85 ohm, 1/4 W. resistor - part of CE 9535	50	RM 9566
On & Off switch - part of CE 9535	51	

Description of Parts

	Part #
Power transformer	PT 9587
Dial light (6-8V)	LP 981
Speaker assembly	SK 9523
Output transformer	PT 9515
Diaphragm, voice coil assembly	SA 108716
2 mfd., 400 V. condenser	CP 4-20
1 meg., 1/4 W. resistor	RM 9574
.1 mfd., 200 V. condenser	CP 2-10
Dial light (6.3 V.)	LP 9510

Description of Parts

MAIN ASSEMBLIES

	Part #
Chassis assembly	CH 98505
Speaker assembly	SK 9515
Cabinet	CA 9531

BRACKETS, CLIPS AND CLAMPS

	Part #
Bracket over dial scale	BK 98509 GA
Bracket for gang condenser	BK 98507
Dial scale bracket on variable condenser	BK 98501
Bracket for mounting large electrolytic condenser	BK 98538
Bracket for mounting small electrolytic condenser	BK 98198

CABLES AND CABLE ASSEMBLY

	Part #
Antenna and ground cables	CB 9541
Line cable assembly	CB 9513
Copper braid	FR 108888
Dial drive cable	FR 97180

SCREWS AND NUTS

	Part #
Chassis mounting screw	SC 18-16 GA
Set screw for dial indicator	SC 97061
Set screw for pulley	SC 108441

WASHERS, BUSHINGS AND SPACERS

	Part #
Chassis mounting washer	WA 106539
Rubber bushing for variable condenser mounting	WB 1058
Rubber bushing for speaker mounting	WB 9519 GA
Spacer - Vernier drive mounting	WS 101742
Cardboard washer for speaker	WC 9582

MISCELLANEOUS

	Part #
Knob - spring type	KN 9561
Dial gasket	GA 9512
Knob - set screw type	KN 9563
Dial indicator assembly	DI 9540
Dial indicator	DI 9560
Vernier drive shaft	SH 9564
Pulley - dial drive	PU 9539
Spring for dial drive cable	SP 9540
Tube socket - 8 prong	SO 939
Speaker socket	SO 9519
Copper ring for speaker	RI 107787
Dial lamp socket	SO 9580
Dial lamp socket - side	SO 9582
Masking plate	MA 9544
Dial indicator assembly	DI 9548
Pulley - dial driven	PU 9549
Vernier drive shaft	SH 9564
Spring for dial drive cable	SP 9540
Tube socket - 8 prong	SO 939
Speaker socket	SO 9519
Copper ring for speaker	RI 107787
Dial lamp socket	SO 9580
Speaker plug cover	SA 107878

©John F. Rider, Publisher

UNITED AMERICAN BOSCH CORP.

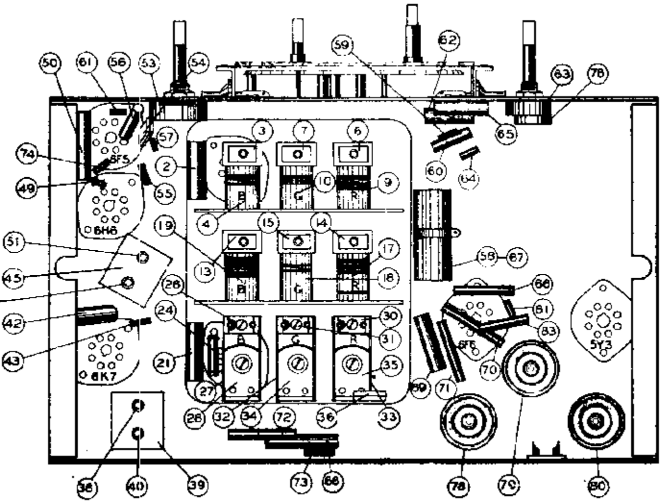

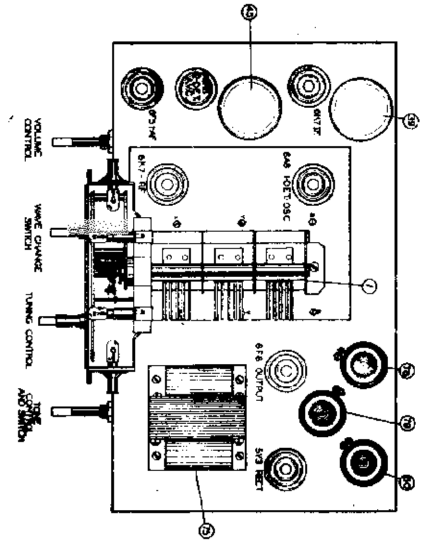

AMERICAN-BOSCH CentrOmatic RADIO MODELS 660T-660C

Seven-Tube, Three-Band, Superheterodyne Receivers.

SERVICE NOTES

ELECTRICAL SPECIFICATIONS

Type and Number of Tubes	2 #6K7, 1 #6A8, 1 #6H6, 1 #6F5, 1 #6F6, 1 #5Y3 - Total 7
Power Supply	105 to 125 volts, 50 to 60 cycles A.C.
Power Consumption	60 Watts
Maximum Undistorted Output	2.5 Watts
Maximum Output	3.5 Watts
Tuning Ranges	(White Band - 525 to 1800 KC. (Green Band - 1758 to 6000 KC. (Red Band - - 5800 to 18500 KC.
Line-Up Frequencies	I.F.465 KC., 1600 KC., 570 KC., 5500 KC., 1900 KC., 17000 KC., 6000 KC.

GENERAL DESCRIPTION

This model is a seven-tube, three-band, superheterodyne receiver designed for world-wide reception and employs the new all-metal tubes.

The circuit employs a high frequency amplifier using the new type 6K7 tube. This is followed by a combined first detector-oscillator circuit employing a 6A8 tube. These tubes with their associated circuits, (coils, variable condensers, trim condensers for R.F. and detector stages, and trim and lag condensers for the oscillators) comprise a complete assembly in compact form separately cushioned from the main chassis. This assembly is known as the "CentrOmatic" unit. From the high frequency assembly the energy passes thru an I.F. selective transformer and to an I.F. amplifier tube (type 6K7). From here further selection takes place and the energy is sent to the diode (type 6H6) where second detection takes place and voltages are provided for automatic volume control. A first audio amplifier tube (type 6F5) follows the diode and this is further followed by a pentode power amplifier tube (type 6F6). A type 5Y3 rectifier supplies the direct current for energizing the tubes.

REMOVING INDIVIDUAL COIL AND SWITCH SECTIONS OF CENTROMATIC UNIT

If a component part located underneath the switch and coil assemblies of the "CentrOmatic" unit has to be replaced or a section of the unit has to be removed for inspection, each section can easily be removed separately. To do this proceed with care as follows:

1. Remove the two screws which fasten the mounting plate of the wave change switch shaft to the chassis. Pull switch shaft out straight.
2. Unsolder the stator and rotor leads from the gang condenser.
3. The fastening screws for the switch sections are located on top of the "CentrOmatic" unit and are indicated by X, Y and Z in Figure #1. Remove the corresponding screws.
4. Each individual section can then be pulled out straight.

NOTE: On the R.F. section the plate lead from the 6K7 socket will have to be unsoldered from the socket before the section can be removed. On the oscillator section the blue lead from the 6A8 detector-oscillator socket and the yellow plate supply lead to the switch will have to be unsoldered from the switch.

5. After repairs have been made, resolder the leads mentioned above and replace the section, being careful to observe that the slotted holes in the switch bracket line up with the round guide pins on the base plate of the "CentrOmatic" unit. This is IMPORTANT as the switch shaft cannot be inserted if the switch brackets do not line up.
6. Replace the section fastening screws.
7. Resolder the stator and rotor leads on the gang condenser.
8. Replace the switch shaft and the mounting plate fastening screws. When inserting the switch shaft, be careful that all the switch discs are in the same position. Otherwise the switch shaft will not slide in. NEVER force the shaft into the switch discs. If shaft does not slide in freely, examine the position of the slots in each switch disc.

LINE-UP CAPACITOR ADJUSTMENTS

To align the circuits of this receiver it is essential to use a high grade modulated test oscillator, the output of which can be continuously varied with absence from overload when the individual circuits of the receiver are brought into alignment. A conventional output meter can be connected across the terminals of the speaker voice coil to indicate when the circuits are aligned. The sensitivity of the output meter must be sufficient to give satisfactory reading with a low input signal. Before attempting to align the receiver, the service man should familiarize himself with the general layout of the chassis, the location of the tubes and various alignment condensers. Top and bottom views of the chassis are shown in Figures #1 and #2 and should be carefully studied before the actual work is started.

ADJUSTMENT OF I.F. (465 KC.)

1. Set volume control on full and turn tone control to the base position.
2. Connect output meter across voice coil of speaker.
3. Set test oscillator to 465 KC. and adjust its output to produce a measureable reading on output meter when test signal is applied to the grid of the 6K7 I.F. tube through a .5 mfd. blocking condenser.
4. Adjust trimmers #44 and #51 to maximum output, reducing output of test oscillator as required.
5. Apply test signal to grid of 6A8 detector-oscillator and adjust #38 and #40 to maximum output.

ADJUSTMENT OF BROADCAST BAND

1. Set wave change switch to the White or Broadcast Band position.
2. Set test oscillator and dial indicator to 1600 KC.
3. Apply test signal to antenna terminal of chassis through a .0002 mfd. series condenser and adjust #26, #13 and #3 to maximum output.
4. Set test oscillator and dial indicator to 570 KC. and adjust #28 to maximum output, at the same time rocking the variable tuning condenser.
5. Return to 1600 KC. setting with both test oscillator and dial indicator and readjust #26, #13 and #3 for accuracy.

ADJUSTMENT OF GREEN BAND

NOTE: In adjusting the two short-wave bands (Green and Red) a .0002 mfd. condenser and a 400 ohm resistor connected in series should be inserted in the high side of the test oscillator leads. This condenser-resistor combination is the approximate equivalent of a short-wave antenna.

1. Set wave change switch to the Green Band position.
2. Set test oscillator and dial indicator to 5500 KC. and adjust #31, #15 and #7 to maximum output.
3. Set test oscillator and dial indicator to 1900 KC. and adjust #34 to maximum output, at the same time rocking the variable tuning condenser.
4. Return to 5500 KC. setting and make readjustment of #31, #15 and #7.

ADJUSTMENT OF RED BAND

1. Set wave change switch to the Red Band position.
2. Set test oscillator and dial indicator to 17000 KC. and adjust #30, #14 and #6 to maximum output.
3. Set test oscillator and dial indicator to 6000 KC. and adjust #35 to maximum output, at the same time rocking the variable tuning condenser.
4. Return to 17000 KC. setting and make readjustment of #30, #14 and #6.

IMPORTANT: While testing or making repairs on this receiver, the chassis should not be turned upside down or on its side for any long period of time while the set is turned on as the chemicals in the electrolytic filter condenser will come out through the air vents making the condenser appear to be defective. If left in this position too long the condenser may be injured.

MODEL 660C

All service parts for Model 660C are the same as for Model 660T except for the following parts:

Dia. #	Part #	Description of Parts
84	SK 9513	Speaker assembly
85	SA 108914	Diaphragm and voice coil assembly

Part #	Description of Parts
	MAIN ASSEMBLIES
SK 9513	Speaker assembly
KA 9548	Cabinet
SC 101788	Chassis mounting screw

SERVICE PARTS LIST MODEL 660T

These prices supersede all previous prices and are subject to change without notice. U.S.A. Sales Tax included in prices of taxable parts.

Consult Price Section Page ... for Supplements and Changes.

Dia. #	Part #	Description of Parts
1	CG 9550	Variable condenser
2	CW 2-10	.1 mfd., 200 V. condenser
3	CS 9554	4-30 mmf., trimmer condenser
4	RC 95209	Antenna coil (broadcast)
5	SW 9563	Switch and bracket assembly - Antenna & R.F. Sections.
6	CS 9554	4-30 mmf. trimmer condenser
7	CS 9554	4-30 mmf. trimmer condenser
8		Twisted wire - part of RC 95206
9	RC 95206	Antenna coil - red band
10	RC 95212	Antenna coil - green band
11	CW 9513	.05 mfd., 200 V. condenser
12	RE 9563	50,000 ohm, 1/4 W. resistor
13	CS 9554	4-30 mmf., trimmer condenser
14	CS 9554	4-30 mmf., trimmer condenser
15	CS 9553	1.5-10 mmf., trimmer condenser
16	CM 9512	6 mmf., mica condenser
17	RC 95207	R.F. coil assembly - red
18	RC 95214	R.F. coil assembly - green
19	RC 95210	R.F. coil assembly (broadcast)
20	CM 9511	.000065 mfd., mica condenser
21	CW 2-05	.05 mfd., 200 V. condenser
22	RE 9529	300 ohm, 1/4 W. resistor
23	RE 9537	50 ohm, 1/4 W. resistor
24	RE 9525	5,000 ohm, 1 W. resistor
25	CW 9513	.05 mfd., 200 V. condenser
26		5-25 mmf., trimmer condenser - part of CS 9540
27	RC 95211	Oscillator coil (broadcast)
28		370-600 mmf., oscillator series cond. - part of CS 9540
30		3-15 mmf., trimmer condenser - part of CS 9520
31		3-15 mmf., trimmer condenser - part of CS 9520
32	RC 95213	Oscillator coil - green
33	RC 95208	Oscillator coil - red
34		800-1600 mmf., lag condenser - part of CS 9520
35		800-1600 mmf., lag condenser - part of CS 9520
36	CM 959	.002 mfd., mica condenser
37	SW 9565	Switch & bracket assembly - oscillator section
38		80-200 mmf. trimmer condenser - part of IC 9576
39	IC 9576	First I.F. coil assembly
40		80-200 mmf. trimmer condenser - part of IC 9576
41	RE 9573	.25 meg., 1/4 W. resistor
42	CW 2-05	.05 mfd., 200 V. condenser
43	SA 105277	75,000 ohm, 1/4 W. resistor
44		80-200 mmf., trimmer condenser - part of IC 9577
45	IC 9577	Second I.F. coil assembly
46		100 mmf., mica condenser - part of IC 9577
47		100 mmf., mica condenser - part of IC 9577
48	SA 105281	1 meg., 1/4 W. resistor
49	SA 105281	1 meg., 1/4 W. resistor
50	CW 2-05	.05 mfd., 200 V. condenser
51		80-200 mmf. trimmer condenser - part of IC 9577
52		50,000 ohm, 1/4 W. resistor - part of IC 9577
53	VR 9536	Volume control - .5 meg.
54	CM 9519	.0005 mfd., mica condenser
55	SA 105281	1 meg., 1/4 W. resistor
56	CW 2-02	.02 mfd., 200 V. condenser
57	RE 9504	.1 meg., 1/4 W. resistor
58	CE 9526	12 mfd., 25 V. condenser
59	SA 105249	5,000 ohm, 1/4 W. resistor
60	CW 2-05	.05 mfd., 200 V. condenser
61	RE 9573	.25 meg., 1/4 W. resistor
62	CW 4-02	.02 mfd., 400 V. condenser
63	VR 9512	Tone control - .5 meg.
64	RE 9585	.25 meg., 1/4 W. resistor
65	CW 2-001	.001 mfd., 200 V. condenser
66	SA 107581	600 ohm, 1 W. resistor
67		12 mfd., 25 V. condenser - part of CE 9526
68	CW 4-10	.1 mfd., 400 V. condenser
69	CW 4-10	.1 mfd., 400 V. condenser
70	SA 103836	10,000 ohm, 2 W. resistor
71	SA 107572	5,000 ohm, 2 W. resistor
72	SA 101401	15,000 ohm, 1 W. resistor
73	SA 104966	30,000 ohm, 1/2 W. resistor
74	SA 105260	300 ohm, 1/4 W. resistor
75	TR 9557	Power transformer
76		Switch (On & Off) - part of VR 9512
77	LP 9515	Dial lamp - 3.2 V.
78	CE 9528	8 mfd., 450 V. electrolytic condenser
79	CE 9536	18 mfd., 450 V. electrolytic condenser
80	CE 9535	16 mfd., 300 V. electrolytic condenser
81	RE 9583	75 ohm, 1/4 W. resistor
82	TR 9515	Output transformer
83	CW 4-005	.005 mfd., 400 V. condenser
84	SK 9511	Speaker
85	SA 107282	Diaphragm

Part #	Description of Parts
	MAIN ASSEMBLIES
CH 95107	Chassis assembly
SK 9511	Speaker assembly
KA 9548	Cabinet
	BRACKETS, CLIPS AND CLAMPS
BK 95209	Bracket assembly for idler pulley
BK 95206	Dial mounting bracket
BK 95211	Bracket assembly for top dial lamp socket
	CABLES AND CABLE ASSEMBLY
CB 9512	Line cable assembly
BT 961	Dial drive belt

©John F. Rider, Publisher

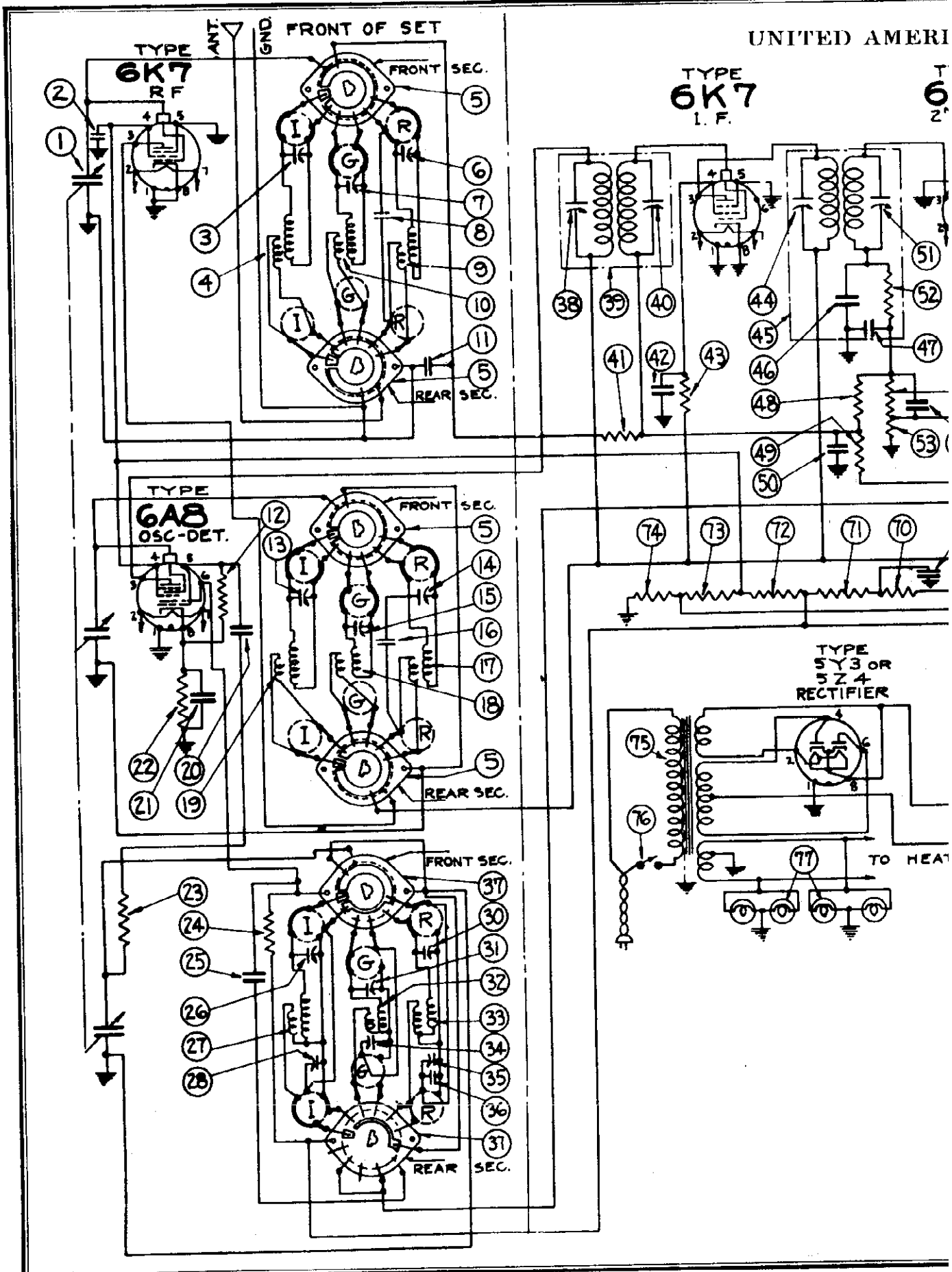

©John F. Rider, Publisher

MODELS 660T, 660C
Preliminary
Schematic, Voltage
Coil Resistances

CAN BOSCH CORP.

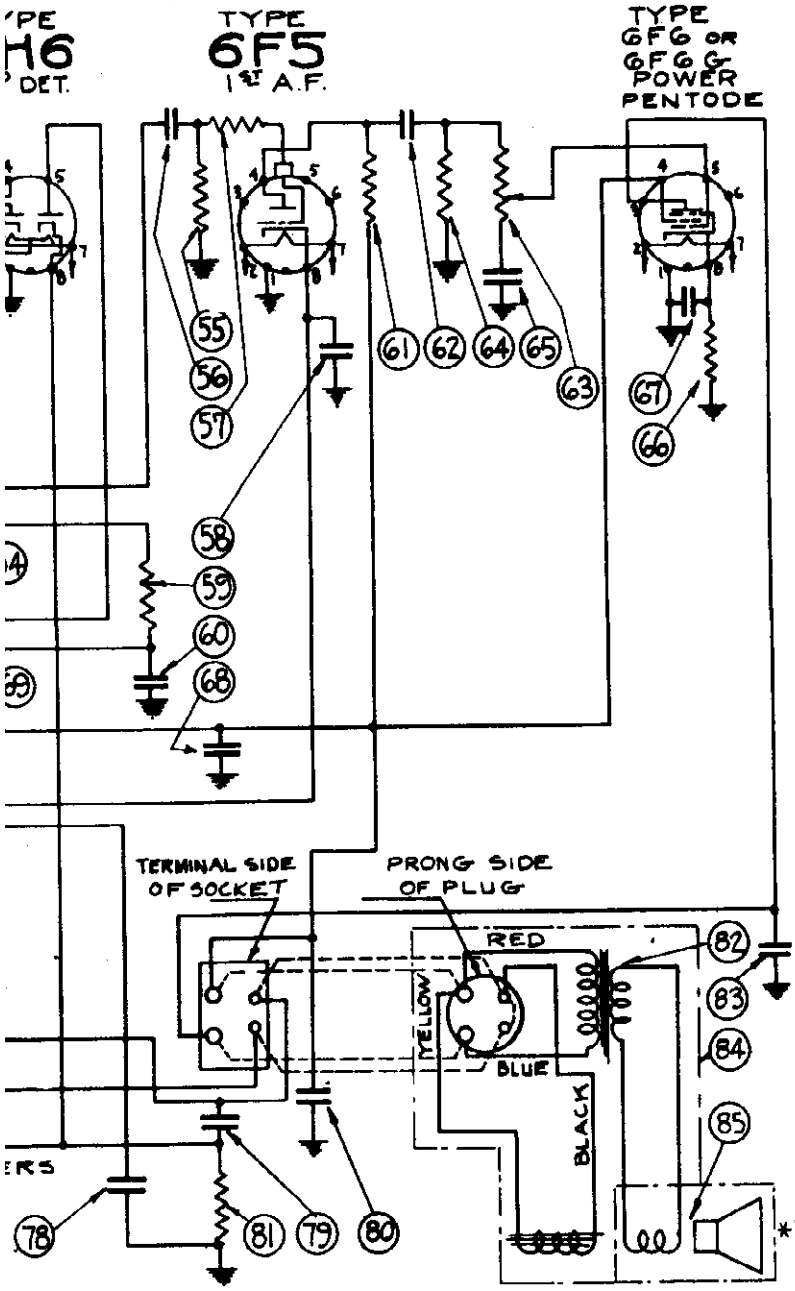

DC RESISTANCE MEASURED WITH WAVE-CHANGE SWITCH IN CORRESPONDING BAND POSITION			
COIL	DIA. NO	PRIM	SEC.
I-ANT	4	18.5Ω	3.8Ω
I-RF	.9	0.8	10.7
I-OSC	3.7	1.4	3.3
G-ANT	10	2.1	1.0
G-RF	18	1.8	1.0
G-OSC	32	0.8	0.8
R-ANT	9	0.7	0.03
R-RF	17	2.0	0.03
R-OSC	33	0.5	0.03
1ST IF	39	8.6	8.6
2ND IF	45	8.6	8.6
OUTPUT TRANS	82	450	0.5
SPKR FIELD		1900	
VOICE COIL	85	3	

*THE CONTROL GRID BIAS ON THE 6K7 TUBES EQUAL TO APPROXIMATE SIX-TENTHS THE VOLTAGE FROM PINS 5-1 ON THE 6H6 TUBE SOCKET.

INT. FREQ. 465 KC.

SOCKET VOLTAGES-LINE = 115 VOLTS TAKEN FROM BOTTOM OF SOCKETS
MEASUREMENTS MADE WITH A 1000 OHMS PER VOLT VOLTMETER W. WITH WAVE CHANGE SWITCH IN BROADCAST BAND POSITION

TUBE	STAGE	FIL	PINNOS	PLATE	PINNOS	SCREEN	PINNOS	BIAS	PINNOS
6K7	R.F.	6.35	2-7	263	3-1	94	4-1	* SEE NOTE	
6A8	DET-OSC	6.35	2-7	263 1A7 GRT	3-1 6-1	94	4-1	3.7	8-1
6K7	I.F.	6.35	2-7	263	3-1	103	4-1	* SEE NOTE	
6H6	2ND DET. AVC	6.35	2-7					-5.5	6-1
6F5	AUDIO	6.35	2-7	111	4-1			1.1	8-1
6F6	OUTPUT	6.35	2-7	247	3-1	263	4-1	17.5	8-1
5Y3	RECTIFIER	5.15	2-8	380	8-1				

MODEL 610
Preliminary
Schematic
Voltage, Parts

UNITED AMERICAN BOSCH CORP.

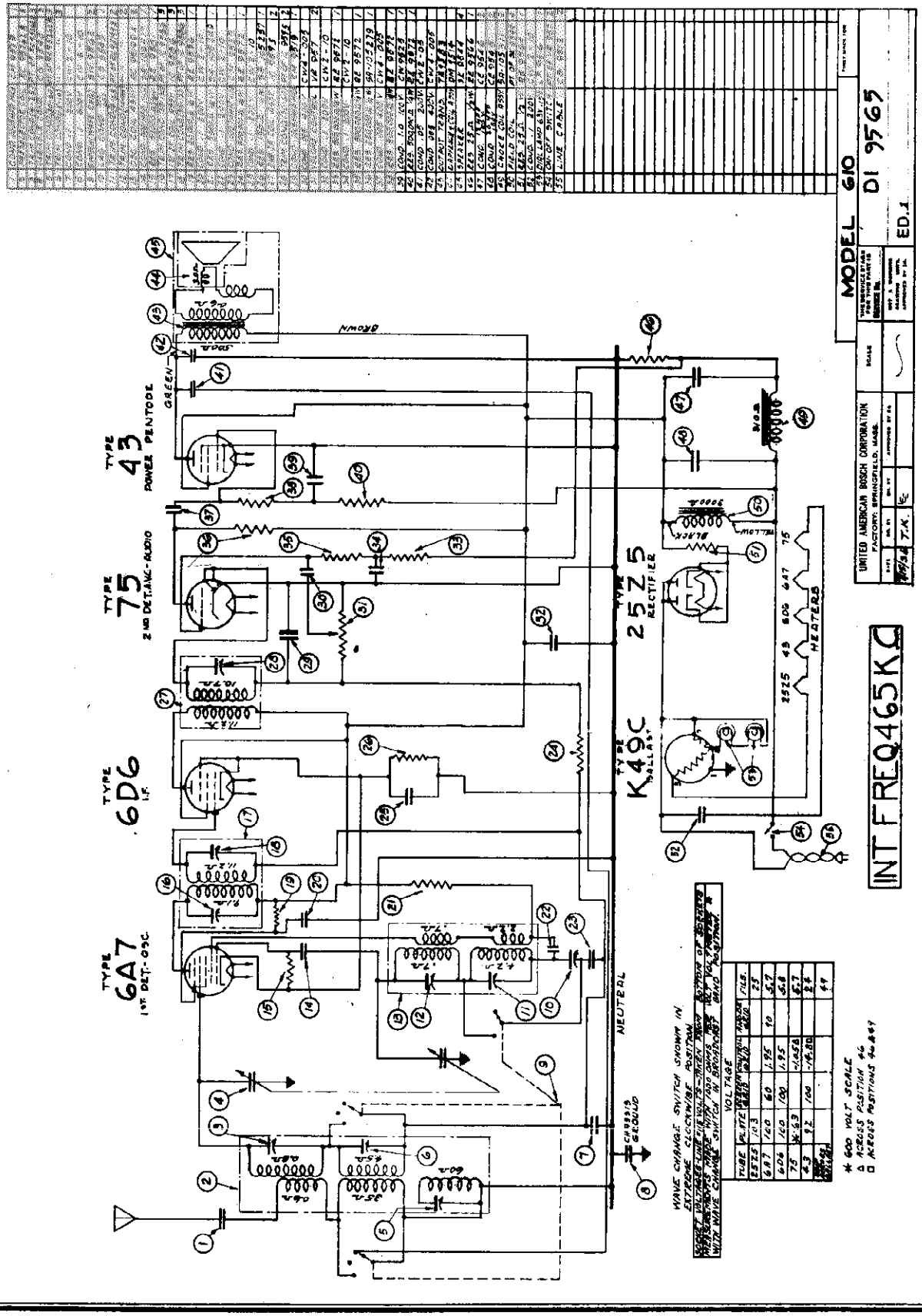

©John F. Rider, Publisher

MODELS 670S, 67C
Parts List

UNITED AMERICAN BOSCH CORP.

SERVICE PARTS LIST MODELS 670S-670C

These prices supersede all previous prices and are subject to change without notice.
U.S.A. Sales Tax included in prices of taxable parts.

Consult Price Sheets Page 813 for Supplements and Changes.

Dia. #	Part #	Description of Parts
1	CG 9551	Variable condenser
2	CW 2-10	.1 mfd., 200 V. condenser
3	SW 9535	Switch and bracket assembly - antenna section
4	RC 95220	Antenna coil (Red)
5	CS 9554	4-30 mmf. trimmer condenser
6		Twisted wire - part of RC 95220
7	RC 95212	Antenna coil (Blue)
8	CS 9554	4-30 mmf. trimmer condenser
9	RC 95216	Antenna coil (White)
10	CS 9554	4-30 mmf. trimmer condenser
11	RC 95219	Antenna coil (Green)
12	CS 9554	4-30 mmf. trimmer condenser
13	CW 9515	.05 mfd., 200 V. condenser
14	SW 9536	Switch and bracket assembly - R.F. section
15	RC 95217	R.F. coil (Red)
16	CS 9554	4-30 mmf. trimmer condenser
17	CM 9512	6 mmf. mica condenser
18	RC 95214	R.F. coil (Blue)
19	CS 9553	1.5-10 mmf. trimmer condenser
20	RC 95215	R.F. coil (White)
21	CS 9554	4-30 mmf. trimmer condenser
22	RC 95218	R.F. coil (Green)
23	CS 9553	1.5-10 mmf. trimmer condenser
24	RE 9529	.1 meg., 1/4 W. resistor - part of RC 95216
25	CW 2-05	500 ohm, 1/4 W. resistor
26	CM 9511	.05 mfd., 200 V. condenser
27	RE 9537	.000065 mfd. mica condenser
28	CS 9553	50 ohm, 1/4 W. resistor
29	RC 95215	50,000 ohm, 1/4 W. resistor
30	CS 9554	.05 mfd., 200 V. condenser
31	RE 9524	5,000 ohm, 1/4 W. resistor
32	CW 9513	Switch and bracket assembly - oscillator section
33	RE 9536	Oscillator coil (Red)
34	SW 9537	5-15 mmf. trimmer condenser - part of CS 9557
35	RC 95223	.002 mfd., mica condenser
36	CM 959	800-1600 mmf., oscillator series cond. - part of CS 9557
37		Oscillator coil (Blue)
38	RC 95213	800-1600 mmf. trimmer condenser - part of CS 9520
39		800-1600 mmf. osc. series condenser - part of CS 9520
40	RC 95221	Oscillator coil (White)
41		500-600 mmf. osc. series condenser - part of CS 9517
42		5-25 mmf. trimmer condenser - part of CS 9517
43	RC 95222	Oscillator coil (Green)
44		80-100 mmf. trimmer condenser - part of CS 9558
45		80-150 mmf. osc. series condenser - part of CS 9558
46	IC 9578	First I.F. coil assembly
47		80-800 mmf. trimmer condenser - part of IC 9576
48		80-800 mmf. trimmer condenser - part of IC 9576
49	RE 9535	.25 meg., 1/4 W. resistor
50	CW 2-05	.05 mfd., 200 V. condenser
51	SA 105277	75,000 ohm, 1/4 W. resistor
52	IC 9577	Second I.F. coil assembly
53		80-800 mmf. trimmer condenser - part of IC 9577
54		100 mmf. mica condenser - part of IC 9577
55		80-800 mmf. trimmer condenser - part of IC 9577
56		80,000 ohm, 1/4 W. resistor - part of IC 9577
57		100 mmf. mica condenser - part of IC 9577
58	SA 105281	1 meg., 1/4 W. resistor
59	CW 2-06	.05 mfd., 200 V. condenser
60	SA 105281	1 meg., 1/4 W. resistor
61	VR 959	Volume control - .5 meg.
62	SA 104968	30,000 ohm, 1/2 W. resistor
63	SA 101404	15,000 ohm, 1 W. resistor
64	SA 103635	10,000 ohm, 2 W. resistor
65	CE 9536	12 mfd., 450 V. electrolytic condenser
66	CE 9535	16 mfd., 300 V. electrolytic condenser
67	CW 4-02	.02 mfd., 400 V. condenser
68	SA 106281	1 meg., 1/4 W. resistor
69	RE 9581	.1 meg., 1/4 W. resistor
70	CW 4-10	.1 mfd., 400 V. condenser
71	CE 9526	12 mfd., 400 V. electrolytic condenser
72	CW 4-02	.02 mfd., 400 V. condenser
73	CW 4-02	.02 mfd., 400 V. condenser
74	CW 4-02	.02 mfd., 400 V. condenser
75	TR 9563	Interstage transformer
76	VR 9536	Tone control - .1 meg., 5,000 ohm min.
77	RE 9585	.25 meg., 1/4 W. resistor
78	RE 9587	12 mfd., electrolytic condenser - part of CE 9526
79	CW 4-005	500 ohm, resistor
80	CW 4-005	.005 mfd., 400 V. condenser
81	CW 4-02	.005 mfd., 400 V. condenser
82	CW 9526	.02 mfd., 400 V. condenser
83	SA 106272	1 mfd., 400 V. condenser
84	TR 9562	10,000 ohm, 1/4 W. resistor
85		Power transformer
86	LP 9515	On & Off switch - part of VR 9539
87	CE 9528	Dial lamp - 3.5 V.
88	RE 9588	8 mfd., 450 V. electrolytic condenser
89	SK 959	70 ohm, 1/4 W. resistor
90		Speaker
91	TR 9513	Output transformer
92	DM 956	Diaphragm & voice coil assembly
93	CW 4-05	.05 mfd. 400 V. condenser
94	SI 9561	Tuning indicator
95	RE 9585	.25 meg., 1/4 W. resistor
96		

Description of Parts

MAIN ASSEMBLIES

Part #	
CH 95109	Chassis assembly
KA 9558	Cabinet - Model 6708
KA 9544	Cabinet - Model 6700
SK 959	Speaker

BRACKETS

Part #	
BK 95217	Bracket assembly - dial support - top
BK 95220	Variable condenser to dial - support bracket
BK 95219	Bracket for dial - top
BK 95182	Electrolytic condenser mounting bracket

CABLE ASSEMBLIES

CB 9512	Line cable assembly
CB 9595	Cable assembly for band indicator - long
CB 9596	Cable assembly for band indicator - short

GEARS

GB 9520	Pinion gear assembly for second hand
GB 9516	Variable condenser drive gear assembly
GB 9514	Gear assembly - between drive and second hand gears

KNOBS

KN 9561	Volume and tone control knobs
KN 9566	Wave change switch knob
KN 9565	Tuning control knob - large
KN 9560	Tuning control knob - small

MISCELLANEOUS

SG 101788	Chassis mounting screw
RS 95183	Rubber bushings for mounting tuning unit
SI 9561	Tuning meter
SH 9542	Wave change switch shaft & plate
SH 9543	Vernier drive assembly
SI 9562	Wave band indicator assembly
FL 9575	Plate - dial glass support
SO 9520	Dial lamp socket assembly
PU 9524	Idler pulley
PU 9525	Pulley - band indicator drive
PU 952	Dial drive belt
WN 953	Glass window over dial scale
DS 9564	Glass dial scale
SI 9559	Dial indicator - second hand
SI 9560	Dial indicator
SO 956	Tube socket - 8 prong
SA 107257	Speaker socket

Description of Parts

SPRINGS

Part #	
FP 103164	Spring for band indicator cable
SP 9540	Spring clip for holding dial scale & cover
SP 9541	Spring for idler pulley

SPEAKER PARTS

DM 956	Diaphragm & voice coil assembly
FP 101740	Copper ring
CH 9537	Speaker field coil
TR 9513	Output transformer
SA 107278	Speaker plug - 4 prong
SA 107279	Speaker plug cover

©John F. Rider, Publisher

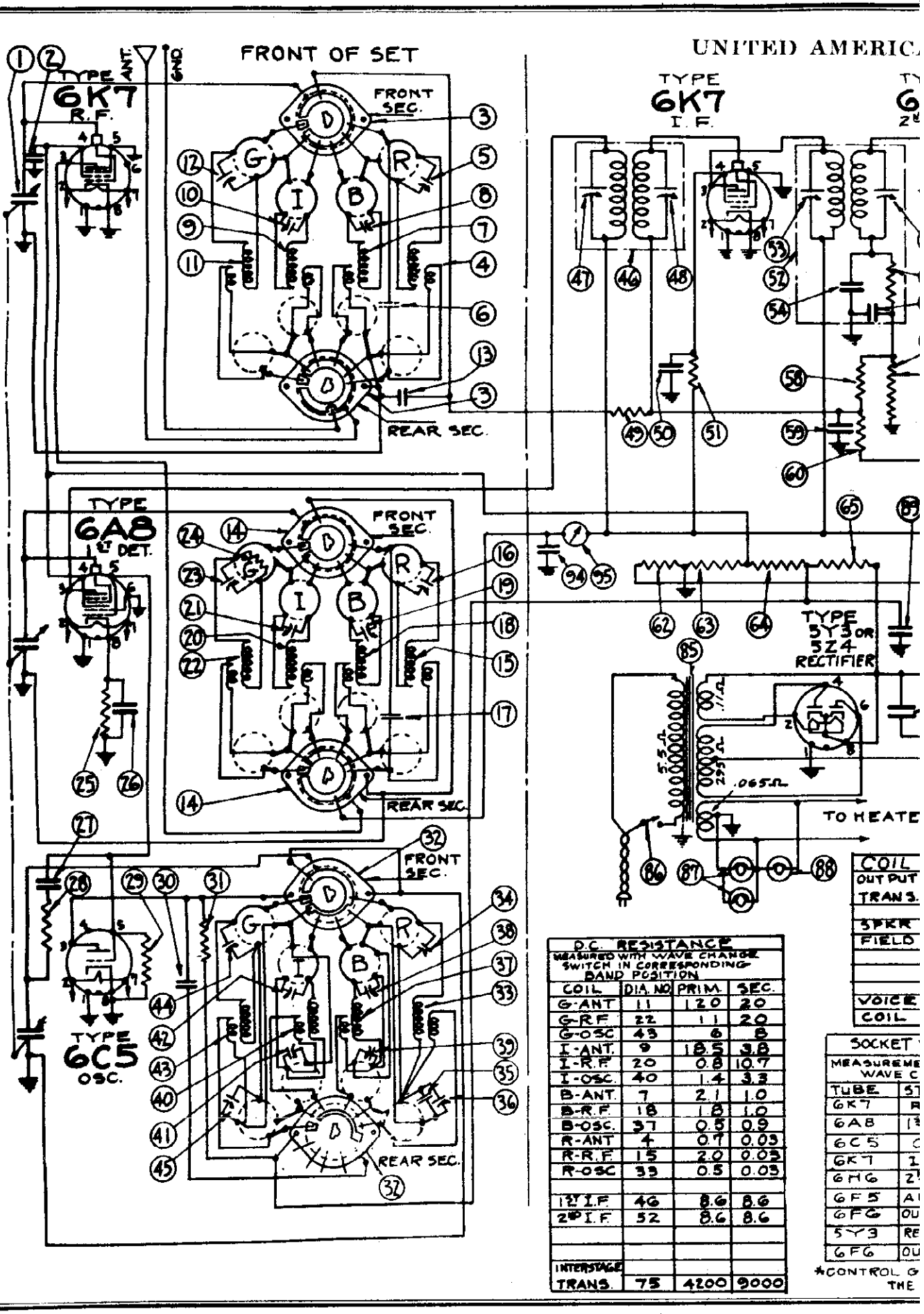

©John F. Rider, Publisher

MODEL 207A, Ed.5
Schematic, Changes
MODELS 670S, 670C
Schematic, Voltage
Coil Resistances

AN BOSCH CORP.

NO.	PRIM.	SEC.
2	372	.09
	1800	
5	3.2	

VOLTAGES - LINE = 115 VOLTS TAKEN FROM BOTTOM OF SOCKETS
MADE WITH A 1000 OHMS PER VOLT VOLTMETER & WITH SWITCH IN BROADCAST BAND POSITION

	FIL.	PIN NOS	PLATE	PIN NOS	SCREEN	PIN NOS	BIAS	PIN NOS
	6.25	2-7	245	3-1	100	4-1	* SEE NOTE	
	6.25	2-7	250	3-1	100	4-1	2.4	8-1
	6.25	2-7	180	3-1				
	6.25	2-7	250	3-1	105	4-1	* SEE NOTE	
	6.25	2-7					5.1	8-1
	6.25	2-7	230	4-1				
	6.25	2-7	235	3-1			1.5	8-1
	5.	2-8	395	8-1	250	4-1	21.5	8-1
	6.25	2-7	235	3-1	250	4-1	21.5	8-1

* VOLTAGE ON 6K7 TUBES IS EQUAL TO APPROX. SIX-TENTHS VOLTAGE FROM PINS 5-1 ON THE 6H6 TUBE SOCKET.

Bosch 207-A Ed. 5. D.C.

The schematic diagram shown in the accompanying illustration is a t-r-f. receiver, operating from the 110-volt, d-c. line. The diagram shown has incorporated in it all the changes that were made in production runs, but in case you should have to repair an early type, we are giving below the changes as they have been made.

Edition 2. C-21 was changed from 8 mf., 200 volts, to 25 mf., 10 volts, Part No. SA-104487.

Edition 3. C-18 was connected to ground and changed to one end of R-11. R-3 was formerly connected to the junction of R-6 and R-8. This was changed to the junction of R-4 and R-6. C-19 was changed from 0.1 mf. to 0.08 mf.

Edition 4. R-12, Part No. 99864, and C-22, Part No. SA-100880, were added. C-7 and C-8 were also added, Part No. SA-102243.

MODELS 670S, 670C
Socket, Trimmers
Alignment, Data

UNITED AMERICAN BOSCH CORP.

AMERICAN-BOSCH CentrOmatic RADIO MODELS 670S-670C

Nine-Tube, Four-Band, Superheterodyne Receivers

GENERAL DESCRIPTION

This model is a nine-tube, four-band, superheterodyne receiver designed for world-wide reception including the U.S. Weather Band and employs the new all-metal tubes. The circuit employs a high frequency amplifier stage, new type mixer, oscillator circuit employing a 6AF tube and a separate oscillator (type 6SF5). These tubes with their associated circuits, together with the new type of coils and tuning system for R.F. and detector stages and lag condensers for the oscillators, comprise a complete assembly in compact form separately cushioned from the main chassis. This assembly is known as the "Centr-Omatic" unit. The first audio amplifier tube (type 6SQ7) is followed by a push-pull output stage employing two 6V6 tubes. A 6X5 rectifier supplies the direct current for energizing the tubes.

REMOVING INDIVIDUAL COIL AND SWITCH SECTIONS OF CENTROMATIC UNIT

If a component part located underneath the "Centr-Omatic" unit has to be replaced or a section of the unit has to be removed for inspection, each section can easily be removed. To do this proceed with care as follows:

1. Remove the two screws which fasten the mounting plate of the wave change switch shaft to the chassis frame. Pull switch shaft straight out.
2. Unsolder the station and rotor leads from the gang condenser.
3. The fastening screws for the switch sections are located on top of the "Centr-Omatic" unit and are indicated by X, Y, and Z in Figure #1. Remove the corresponding screws.
4. Each switch section can then be pulled out straight.

NOTE: On the R.F. section, the plate lead from the 6K7 socket will have to be unsoldered from the switch terminal before the section can be removed.

When repairs have been made, resolder the plate leads mentioned above and replace the section being careful to observe that the slotted holes in the switch bracket line up with the round pilot pins on the back plate of the chassis. Make sure that the spring washer as the switch shaft cannot be inserted if the switch brackets do not line up.

5. Replace the section fastening screws.
6. Replace the station and rotor leads on gang condenser.
7. Replace the switch shaft and the mounting fastening screws. When inserting the switch shaft, be careful that all the switch discs are in the same position as when removed. The shaft will not slide in easily if the discs are not in proper form and the shaft will not slide into the switch discs. If shaft does not slide in freely, examine the position of the slot in each switch disc.
8. Replace the switch shaft and the mounting fastening screws. When inserting the switch shaft, be careful that all the switch discs are in the same position as when removed. The shaft will not slide in easily if the discs are not in proper form and the shaft will not slide into the switch discs. If shaft does not slide in freely, examine the position of the slot in each switch disc.

LINEUP CAPACITOR ADJUSTMENTS

To align the circuits of this receiver it is essential to use a high grade modulated test oscillator. The output of which can be controlled with a dummy type antenna coupled when the individual circuits of the receiver are brought into alignment. A conventional output meter can be connected across the terminals of the speaker voice coil to indicate the output. However, a better stability of the output meter must be sufficient to give satisfactory reading with a low input signal.

Before attempting to align the receiver, with the service man should familiarize himself with the general layout of the chassis, the location of the tubes and various alignment condensers. Top and bottom views of the chassis are shown in Figures #1 and #2 and should be carefully studied before the actual work is started.

ADJUSTMENT OF I.F. (465 KC.)

1. Set volume control on full and turn connected to any position.
2. Connect output meter across voice coil of speaker.
3. Set test oscillator to 465 KC. and adjust its output to produce a measurable reading on output meter. Connect output lead to the grid of 6K7 I.F. tube through a .5 mfd. blocking condenser.
4. Adjust trimmers #25 and #26 for maximum output reducing output of test oscillator as required.
5. Apply test signal to grid of 6A8 first detector and adjust #27 and #28 for maximum output.

ADJUSTMENT OF GREEN BAND

1. Set wave change switch to Green Band position.
2. Set test oscillator and dial indicator to 380 KC.
3. Apply test signal to antenna terminal and ground through a .0022 mfd. series condenser and adjust #44, #23, and #12 for maximum output.
4. Set test oscillator and dial indicator to 150 KC. and adjust #45 for maximum output, rocking the variable tuning condenser.
5. Return to 550 KC. setting with both test oscillator and dial indicator and repeat adjustment of #44, #23 and #12 for accuracy.

ADJUSTMENT OF BROADCAST BAND

1. Set wave change switch to the White or Broadcast position.
2. Set test oscillator and dial indicator to 1600 KC. and adjust #42, #21 and #10 for maximum output.
3. Set test oscillator and dial indicator to 570 KC., and adjust #41 for maximum output, rocking the variable tuning condenser.
4. Return to 1600 KC. setting and make readjustment of #42, #21 and #10.

ADJUSTMENT OF BLUE BAND

NOTE: In adjusting the Blue and Red Bands, a .0002 mfd. condenser and a 400 ohm resistor connected in series should be inserted in the high side of the test oscillator leads. This condenser-resistor combination is the approximate equivalent of a short-wave antenna.

1. Set wave change switch to Blue Band position.
2. Set test oscillator and dial indicator to 5500 KC. and adjust #43, #19 and #8 for maximum output.
3. Set test oscillator and dial indicator to 1900 KC. and adjust #39 for maximum output, at the same time rocking the variable tuning condenser.

ADJUSTMENT OF RED BAND

1. Set wave change switch to Red Band position.
2. Set test oscillator and dial indicator to 8000 KC. and adjust #38, #15 and #6 for maximum output.
3. Set test oscillator and dial indicator to 5800 KC. and adjust #36 for maximum output, at the same time rocking the variable tuning condenser.
4. Return to 18500 KC. setting and make readjustment of #34, #13 and #4.

IMPORTANT: While testing or making repairs on this receiver, the chassis should not be turned upside down or on its side for any length of time, as the action of the oil is toward the bottom of the set. The electrolytic filter condenser will ooze out through the air vents making the condenser appear to be defective. If left in this position too long the condenser may

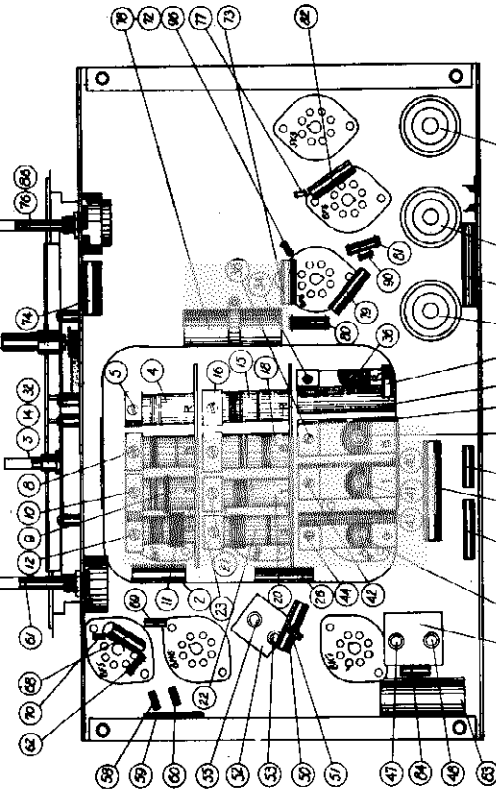

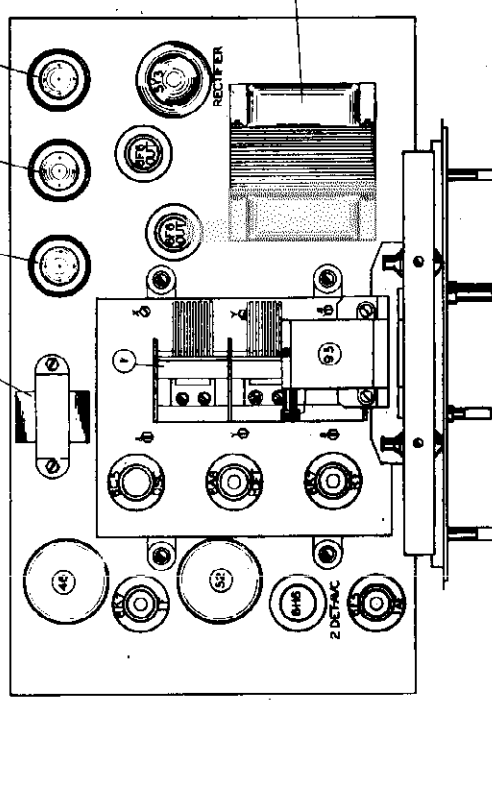

©John F. Rider, Publisher

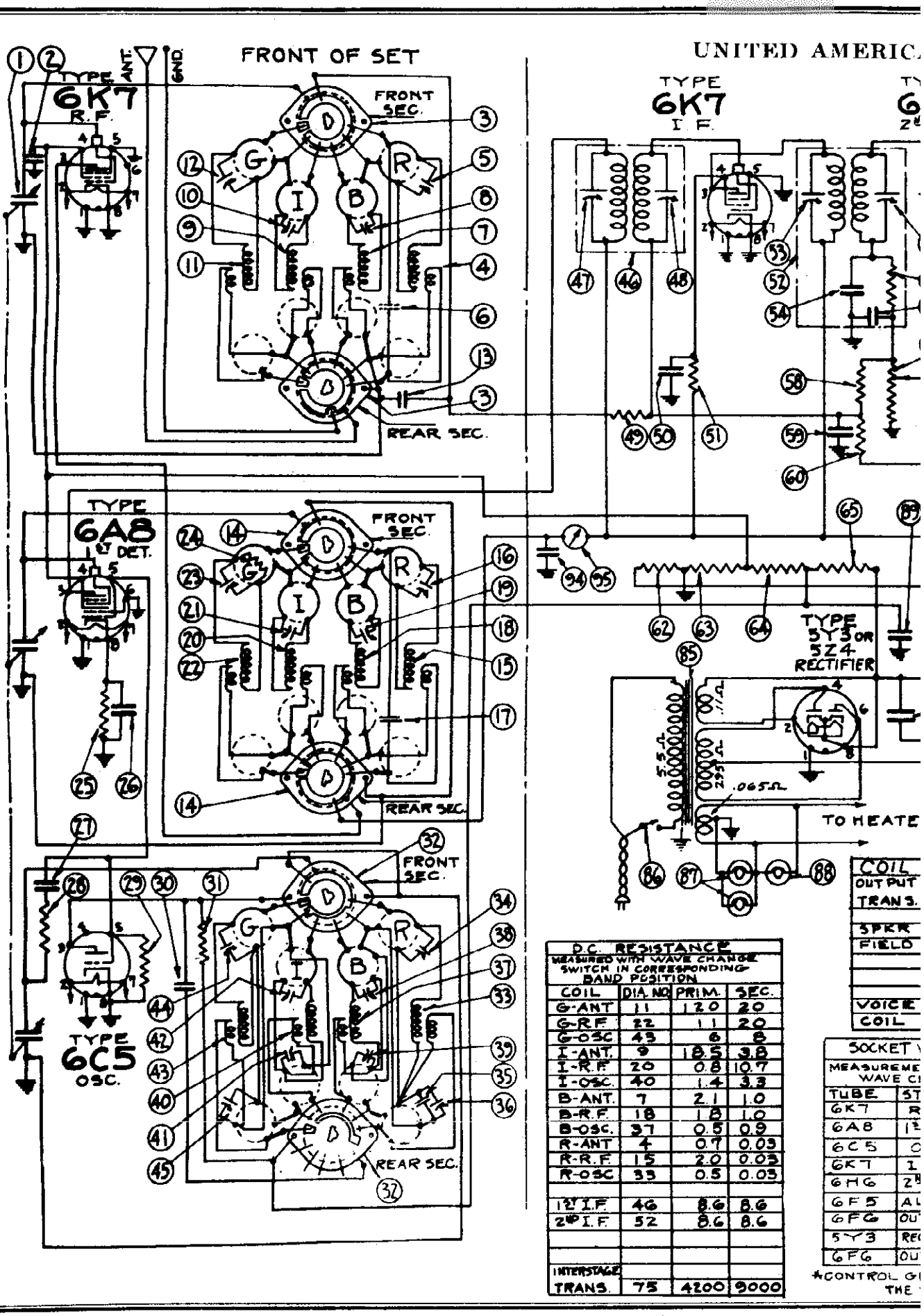

D.C. RESISTANCE
MEASURED WITH WAVE CHANGE SWITCH IN CORRESPONDING BAND POSITION

COIL	DIA. NO.	PRIM.	SEC.
G-ANT	11	120	20
G-R.F.	22	11	20
G-OSC	43	6	8
I-ANT.	9	185	3.8
I-R.F.	20	0.8	10.7
I-OSC.	40	1.4	3.3
B-ANT.	7	2.1	1.0
B-R.F.	18	1.8	1.0
B-OSC.	37	0.5	0.9
R-ANT	4	0.7	0.03
R-R.F.	15	2.0	0.03
R-OSC	33	0.5	0.03
1ST I.F.	46	8.6	8.6
2ND I.F.	52	8.6	8.6
INTERSTAGE TRANS.	75	4200	9000

*CONTROL G
THE

©John F. Rider, Publisher

MODEL 207A, Ed. 5
Schematic, Changes
MODELS 670S, 670C
Schematic, Voltage
Coil Resistances

	PRIM.	SEC.
	SPZ	.03
	1800	
5	5.2	

VOLTAGES-LINE = 115 VOLTS TAKEN FROM BOTTOM OF SOCKETS

MADE WITH A 1000 OHMS PER VOLT VOLTMETER & WITH SE SWITCH IN BROADCAST BAND POSITION

	FIL.	PIN NOS	PLATE	PIN NOS	SCREEN	PIN NOS	BIAS	PIN NOS
	6.25	2-7	245	3-1	100	4-1	* SEE NOTE	
T	6.25	2-7	250	3-1	100	4-1	2.4	8-1
	6.25	2-7	180	3-1				
	6.25	2-7	250	3-1	105	4-1	* SEE NOTE	
T	6.25	2-7					5.1	8-1
J	6.25	2-7	230	4-1			1.5	8-1
T	6.25	2-7	235	3-1	250	4-1	21.5	8-1
ER	5.	2-8	395	8-1				
T	6.25	2-7	235	3-1	250	4-1	21.5	8-1

* BIAS ON 6K7 TUBES IS EQUAL TO APPROX. SIX-TENTHS VOLTAGE FROM PINS 5-1 ON THE 6H6 TUBE SOCKET.

Bosch 207-A Ed. 5. D.C.

The schematic diagram shown in the accompanying illustration is a t-r-f. receiver, operating from the 110-volt, d-c. line. The diagram shown has incorporated in it all the changes that were made in production runs, but in case you should have to repair an early type, we are giving below the changes as they have been made.

Edition 2. C-21 was changed from 8 mf., 200 volts, to 25 mf., 10 volts, Part No. SA-104487.

Edition 3. C-18 was connected to ground and changed to one end of R-11. R-3 was formerly connected to the junction of R-6 and R-8. This was changed to the junction of R-4 and R-6. C-19 was changed from 0.1 mf. to 0.08 mf.

Edition 4. R-12, Part No. 99864, and C-22, Part No. SA-100880, were added. C-7 and C-8 were also added, Part No. SA-102243.

MODELS 670S, 670C
Socket, Trimmers
Alignment, Data

UNITED AMERICAN BOSCH CORP.

AMERICAN-BOSCH CentrOmatic RADIO MODELS 670S-670C

Nine-Tube, Four-Band, Superheterodyne Receivers

GENERAL DESCRIPTION

This model is a nine-tube, four-band, superheterodyne receiver designed for broadcast reception and Short Wave reception including the Police Band and Weather Band and employs the new all-metal tubes. The circuit employs a high frequency amplifier using the new type 6K7 tube. This is followed by the first detector employing a 6A8 tube and a separate oscillator employing a 6C5 tube. The tuned circuits associated with the antenna, r.f. amplifier and first detector (coils, variable condensers, trim condensers for R.F. and detector stages, and trim and lag condensers for the oscillators) comprise a complete assembly removed separately cushioned from the main chassis. This assembly is known as the "CentrOmatic" unit. From the high frequency amplifier the energy passes through the r.f. amplifier tube and to an i.f. amplifier tube (type 6K7). Automatic selection takes place and the energy is sent to the diode (type 6B6) where second detection takes place and voltages are provided for automatic volume control and for the tuning indicator (type 6E5) followed by the first audio stage employing a type 6F6 tube. A further push-pull output stage employing two type 6F6 tubes. A type 5Y3 rectifier supplies the direct current for energizing the tubes.

REMOVING INDIVIDUAL COIL AND SWITCH SECTIONS OF CENTROMATIC UNIT

If a component part located underneath the "CentrOmatic" unit is defective, the entire unit will have to be removed for inspection, each section can easily be removed separately. To do this proceed with care as follows:

1. Remove the two screws which fasten the mounting plate of the wave change switch shaft to the chassis frame. Pull switch shaft straight out.
2. Unsolder the stator and rotor leads from the gang condenser.
3. The fastening screws for the switch sections are located on top of the "CentrOmatic" unit and are indicated by W, Y and Z in Figure #1. Remove the corresponding screws.
4. Each individual section can then be pulled out straight.

NOTE: In the r.f. section, the plate lead from the 6K7 tube is soldered to the stator terminal before the switch terminal is removed.

5. After repairs have been made, resolder the plate lead mentioned above and replace the section being careful to observe that the flat spring on the switch bracket line up with the round guide pins on the base plate of the "CentrOmatic" unit. This is IMPORTANT as the switch shaft cannot be inserted if the switch brackets do not line up.
6. Replace the section fastening screws.
7. Resolder the stator and rotor leads on gang condenser.
8. Replace the switch shaft and the mounting plate screws, carefully that all the switch discs are in the same position. Otherwise the switch shaft will not slide in. NEVER force the shaft into the switch discs. If the shaft does not slide in easily, check the position of the slot in each switch disc.

LINE-UP CAPACITOR ADJUSTMENTS

To align the circuits of this receiver it is essential to use a high grade modulated test oscillator, the output of which can be continuously varied with absence from overload when the individual circuits of the receiver are brought into alignment. A conventional output meter may be used provided the maximum value of the speaker voice coil is indicated when the circuits are aligned. The sensitivity of the output meter must be sufficient to give satisfactory reading with a low input signal.

Before attempting to align the receiver, the service man should familiarize himself with the general layout of the chassis, the location of the tubes and various adjustments. The adjustments are numbered #1 and #2 and should be carefully studied before the actual work is started.

ADJUSTMENT OF I.F. (465 KC.)

1. Set volume control on full and turn tone control to bass position.
2. Connect output meter across voice coil of speaker.
3. Set test oscillator to 465 KC. and adjust its output to produce a measurable reading on output meter when test signal is applied to the grid of 6K7 I.F. tube through a .5 mfd. blocking condenser.
4. Adjust trimmers #5 and #6 for maximum output reducing output of test oscillator as required.
5. Apply test signal to grid of 6A8 First detector and adjust #7 and #8 for maximum output.

ADJUSTMENT OF GREEN BAND

1. Set wave change switch to Green Band position.
2. Set test oscillator and dial indicator to 1500 KC. and adjust #1 for maximum output, at the same time rocking the variable tuning condenser.
3. Apply test signal to antenna terminal of the chassis through a .0002 mfd. series condenser and adjust #4, #3, and #12 for maximum output.
4. Set test oscillator and dial indicator to 150 KC. and adjust #4 for maximum output, at the same time rocking the variable tuning condenser. With both test oscillator and dial indicator set to 150 KC. setting and make readjustment of #4, #3 and #12 for accuracy.

ADJUSTMENT OF BROADCAST BAND

1. Set wave change switch to the White or Broadcast Band position.
2. Set test oscillator and dial indicator to 1500 KC. and adjust #2, #21 and #10 for maximum output.
3. Set test oscillator and dial indicator to 570 KC. and adjust #1 for maximum output, at the same time rocking the variable tuning condenser.
4. Return to 1500 KC. setting and make readjustment of #2, #21 and #10.

ADJUSTMENT OF BLUE BAND

NOTE: In adjusting the Blue and Red Bands, a .0002 mfd. condenser and a 400 ohm resistor connected in series should be inserted in the aerial lead from the set to the dial. This condenser-resistor combination is the approximate equivalent of a short-wave antenna.

1. Set wave change switch to Blue Band position.
2. Set test oscillator and dial indicator to 5500 KC. and adjust #38, #39 and #6 for maximum output.
3. Set test oscillator and dial indicator to 2400 KC. and adjust #36 for maximum output, at the same time rocking the variable tuning condenser.

ADJUSTMENT OF RED BAND

1. Set wave change switch to Red Band position.
2. Set test oscillator and dial indicator to 17000 KC. and adjust #34, #16 and #5 for maximum output.
3. Set test oscillator and dial indicator to 6000 KC. and adjust #36 for maximum output, at the same time rocking the variable tuning condenser.
4. Return to 17000 KC. setting and make readjustment of #34, #16 and #5.

IMPORTANT: While testing or making readjustments on this band, the chassis should not be turned upside down or on its side for any long period of time while the set is turned on as the chemicals in the electrolytic filter condenser will come out through the air vents making the chassis very messy. Turn the set back to this position too long the condenser may

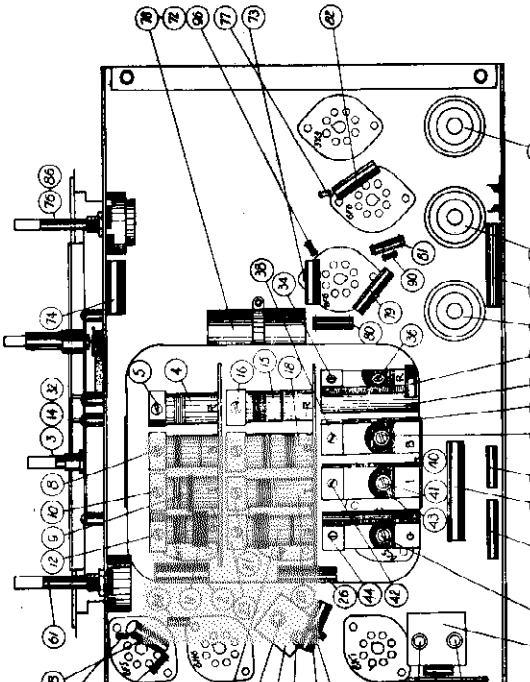

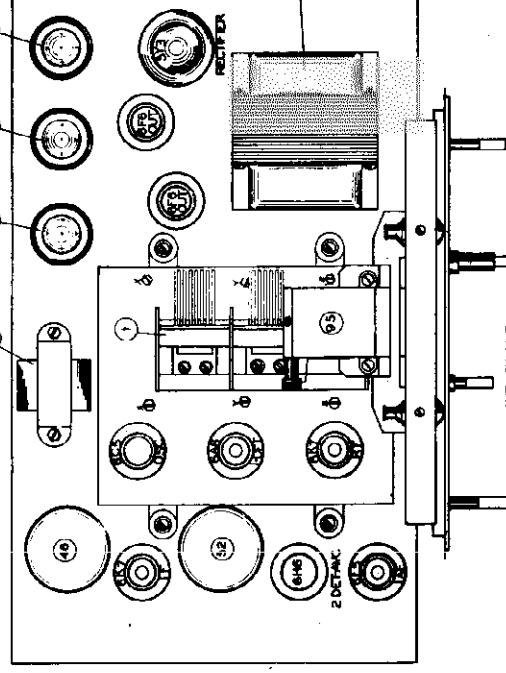

©John F. Rider, Publisher

UNITED AMERICAN BOSCH CORP.

MODEL 812
Schematic
Parts, Voltag
Alignment

R1- 100,000 ohms
R2- 1000 ohms
R3- 2000 ohms
R4- 100,000 ohms
R5- 20,000 ohms
R6- 100,000 ohms
R7- 500,000 ohms
R8- 1 megohm
C1 - Cond. Gang
C2 - Cond. Gang
C3 - Cond. Gang
C4 - Cond. Gang
C5 - Cond. Gang
C6 - Cond. Gang
C7 - .04 mfd. 3 ply
C8 - .05 mfd. 3 ply
C9 - 7 to 70 mmf.
C10- 7 to 70 mmf.
C11- .5 mfd.
C12- .0005 mfd.
C13- 7 to 70 mmf.
C14- .05 mfd. 2 ply

R12- 12,000 ohms
R13- 8000 ohms
R14- 6000 ohms
R15- 30 ohms
R16- 200 ohms
R17- 300 ohms
R18- Center Tap
R19- 20,000 ohms
R9- 500,000 ohms
R10- 500,000 ohms
R11- 500,000 ohms
C15- .0001 mfd mica
C16- .0001 mfd mica
C17- .05 mfd 2 ply
C18- .05 mfd 3 ply
C19- .05 mfd 2 ply
C20- .0001 mfd. mica
C21- 8 mfd.
C22- 8 mfd.
C23- 4 mfd.
C24- .01 mfd 4 ply
C25- .0001 mica
C26- .1 mfd 3 ply

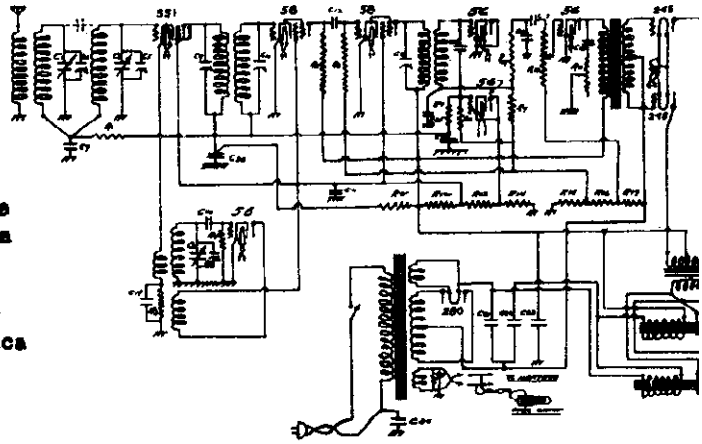

Schematic Wiring Diagram - Model 812 Receiver

Socket Voltage Readings - Model 812 Receiver

	Osc. 56	1st Det. 551	1st I.F. 58	2nd IF 58	AVC 56	2nd Det. 56	AF 56	AF 245	Rect. 280
Filament	2.5	2.2	2.2	2.2	2.3	2.3	2.3	2.3	4.5
Plate	85	228	105	232	36	-	235	225	-
Screen	-	85	85	85	-	-	-	-	-
Bias	7	2.6	2.6	-	-	-	19	45	-

ALIGNMENT INSTRUCTIONS FOR MODEL 812

I. F. ADJUSTMENT

1. Connect the five leads to the loud speaker.
2. Set volume control at maximu, tone control on base, and fround antenna lead.
3. Connect the 175 KC oscillator to the grid of the 2nd I. F. tube.
   a) Align the second I. F. transformer, for max. sensitivity. 20,000 u.v.
4. Connect the 175 KC oscillator to the grid of the 1st I.F. tube.
   a) Align the first and second I.F. coils for max. sens. Limit: 500 u.v.
5. Check the I. F. stability.

OSCILLATOR ADJUSTMENT

1. Adjust scale so that the indicator will be on the second line from the left, when the gang is entirely closed.
2. Connect ant. lead of the R. F. Oscillator to the grid of the 1st Detector.
3. Set the oscillator and set scale at 1400 Kilocycles.
   a) Peak the oscillator condenser on the second signal heard, when turning the condenser out. The osc. condenser is the front align. cond. on the variable condenser gang.
4. Connect ant. lead of the R. F. oscillator to the antennae lead of the set.
   a) Without touching the oscillator condenser, align the R. F. and ant. alignment condensers to the 1400 Kilocycle signal, until maximum sensitivity is obtained.
5. Check sensitivity at 1400 Kilocycles.
   Check sensitivity at 1000 Kilocycles.
   Check sensitivity at 550 Kilocycles.
6. If set lacks sensitivity at 600 or 550, the plates of the condenser gang should be adjusted until the set will reach the sensitivity limits.
7. If set does not track at 600, readjust plates of osc. section of gang condenser.

©Jc

©John F. Rider, Publisher

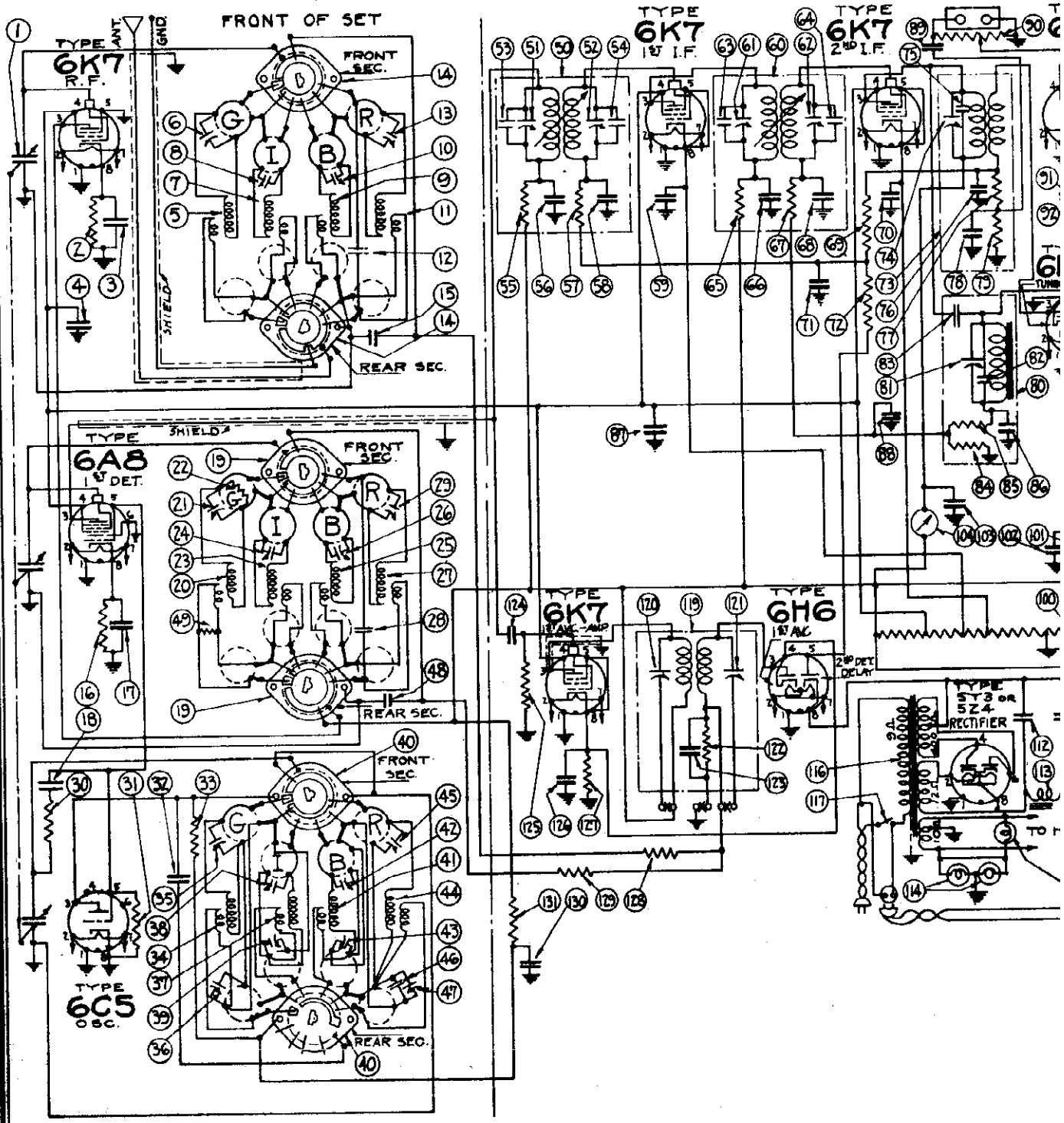

©John F. Rider, Publisher

RICAN BOSCH CORP.

MODEL 680
Preliminary
Schematic, Voltage
Parts List

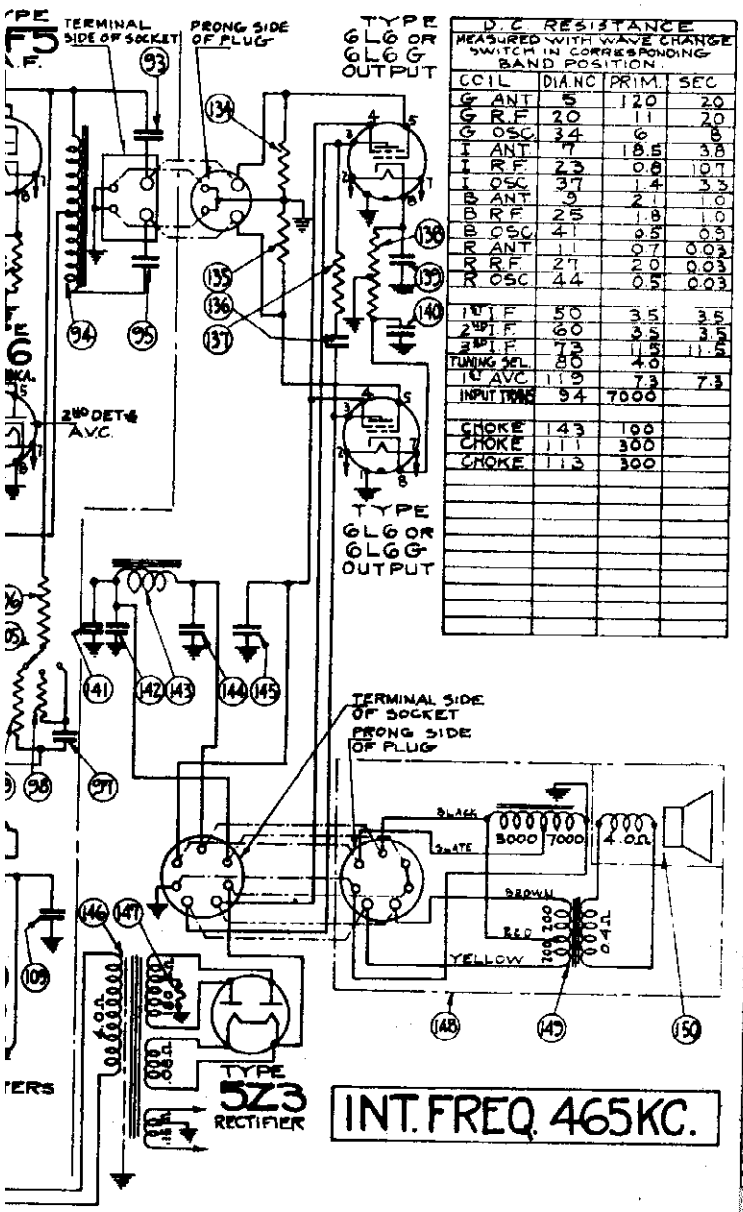

D.C. RESISTANCE
MEASURED WITH WAVE CHANGE SWITCH IN CORRESPONDING BAND POSITION

COIL	DIA. NC	PRIM.	SEC
G ANT	5	120	20
G R.F.	20	11	20
G OSC.	34	6	8
I ANT.	7	18.5	3.8
I R.F.	23	0.8	0.7
I OSC.	37	1.4	3.3
B ANT	5	2.1	1.0
B R.F.	25	1.8	1.0
B OSC.	41	0.5	0.5
R ANT	11	0.7	0.03
R R.F.	27	2.0	0.03
R OSC.	44	0.5	0.03
1ST I.F.	50	3.5	3.5
2ND I.F.	60	3.5	3.5
3RD I.F.	72	11.5	11.5
TUNING SEL.	80	4.0	
TC AVC	115	7.3	7.3
INPUT TRANS	94	7000	
CHOKE	143	100	
CHOKE	111	300	
CHOKE	113	300	

72	RES 1MEG ½W	SA 105281	1	1	VARI. COND (GANG)	CG 9581	1
73	I.F. COIL ASSY (PAIR)	IC 9594 A	3	2	RES 300Ω ¼W	RE 9523	
74	TRIM COND RF ANT	CS 9522	2	3	COND .05MF 200V	CW 2-05	
75	COND .1MF 200V	CW 2-10	1	4	COND .1MF 200V	CW 2-10	
76	COND 6MMF	CM 9513	1	5	ANT. COIL (GREEN)	EC 95219A	2
77	TRIM COND 4-30 MMF	CS 9554	1	6	TRIM COND 4-30 MMF	CS 9554	1
78	ANT COIL (IVORY)	SA 106417	1	7	ANT COIL (IVORY)	EC 95218A	2
79	RES. 250Ω	RE 9531	1	8	TRIM COND 4-30 MMF	CS 9554	1
80	TUNING ASS.	IC 9592A	3	9	ANT COIL (RED)	EC 95217A	2
81	TRIM COND 15-100MMF	CS 9572	2	10	TRIM COND 15-100MMF	CS 9554	1
82	COND .0015 MFD	CM 9518	1	11	OSC COIL (GREEN)	EC 95220A	2
83	COND 12 MMF	CM 9527	1	12	TRIM COND 4-30 MMF	CS 9554	1
84	RES 1MEG ¼W	RE 9530	1	13	OSC COIL (RED)	EC 95221A	2
85	RES 1 MEG ½W	RE 9530	1	14	TRIM COND 4-30 MMF	CS 9554	1
86	COND 500MMF MICA	CM 9519	1	15	SWITCH SECT ASSY	SW 9556	
87	COND .1MF 200V	CW 2-10		16	COND .05MF 200V	CW 9518	1
88	COND .15MF 200V	CW 2-05		17	RES 1000Ω ¼W	RE 9529	1
89	COND .02MF 400V	CW 4-02		18	COND .0015 MICA	CM 9511	1
90	VOL CONT 1MEG	VC 9510	2	19	SWITCH SECT ASSY	SW 9556	
91	COND (ELECT) 4MF 25V	CE 9550	2	20	RF COIL (GREEN)	EC 95216A	2
92	RES 2000Ω ¼W	RE 9550	1	21	TRIM COND 15-100MMF	CS 9553	1
93	COND .02MF 400V	CW 4-02		22	RES 1500Ω ¼W	PT OF EC 95216A	2
94	COND .1MF 200V	CW 2-10		23	RF COIL (IVORY)	EC 95215A	2
95	COND .02MF 400V	CW 4-02		24	TRIM COND 4-31 MMF	CS 9554	1
96	RES 25 MEG ½W	RE 9536	1	25	RF COIL (BLUE)	EC 95214A	2
97	COND .02MF 400V	CW 4-02		26	TRIM COND 4-30 MMF	CS 9554	1
98	RES 2.5 MEG ½W	CE 9536	1	27	RF COIL (RED)	EC 95217A	2
99	COND 6MMF	SA 105277	1	28	COND 6 MMF	CM 9512	1
100	RES 2.5 MEG ½W	RE 9503	1	29	TRIM COND 4-31 MMF	CS 9554	1
101	RES 500Ω ½W	SA 105243	1	30	RES 500Ω ¼W	RE 9537	1
102	COND .02MF 400V	CW 4-02		31	RES 500KΩ ½W (MS)	RE 9563	1
103	COND .05MF 400V	CW 4-26		32	COND .05MF 200V	CW 9518	1
104	VOL CONTROL	SE 9561	2	33	RES 5100Ω 1W	RE 9536	
105		RE 9541	2	34	OSC COIL (GREEN)	EC 95222A	2
106				35	TRIM COND 50-140 MMF	PT OF CS 9558	1
107				36	LAG CONDS 150 MMF	" " "	1
108				37	OSC COIL (IVORY)	EC 95221A	2
				38	TRIM COND 5-25 MMF	PT OF CS 9577	1
				39	LAG COND 390-1400 MMF	PT OF CS 9577	1
				40	SWITCH SECT ASSY	SW 9557	
				41	OSC. COIL (BLUE)	EC 95213A	2
				42	TRIM COND 3-15 MMF	PT OF CS 9580	1
				43	LAG COND 390-1400	PT OF CS 9580	1
				44	OSC. COIL (RED)	EC 95223 A	2
				45	TRIM COND 3-15 MMF	PT OF CS 9557	1
				46	COND .002 MF MICA	CM 9513	1
					LAG COND 390-1400	PT OF CS 9557	1
					COND .05MF 200V	CW 9513	1
					RES 10000Ω ½W	RE 9528	1
					1ST IF COIL ASSY	IC 9588A	2
					TRIM COND 20-80 MMF	PT OF CS 9581	1
					TRIM COND	PT OF CS 9557	1
					COND 100MMF MICA	SA 106417	1
					COND 180 MMF MICA	SA 106417	1
127	RES 2200				RES 5100Ω ½W	RE 9527	1
128	RES 22000				COND .05MF 400V	CW 4-005	1
129	COND				RES 100000Ω ½W	RE 9574	1
130	RES 10.0				COND .05MF 200V	CW 2-05	
131	RES (MAP)			59	COND .05MF 200V	CW 2-05	
132	COND (ELE)		7 2	60	2ND I.F. COIL ASSY	IC 9587A	2
133	COND (ELE)		2	61	TRIM COND 20-80 MMF	PT OF CS 9581	1
134	COND (ELE)		2	62	TRIM COND	" " "	1
135	COND (ELE)		2	63	COND 180 MMF MICA	SA 106417	1
136			7	64	COND 100 MMF MICA	SA 106417	1
137			2	65	RES 5000Ω ½W	RE 9527	1
138			5	66	COND .05MF 400V	CW 4-005	1
139			7	67	RES 100000Ω ½W	RE 9574	1
140		R 9545	4	68	COND .05MF 200V	CW 2-05	
141				69	RES 1MEG Ω ½W	SA 105281	1
142				70	COND .05MF 200V	CW 2-05	
143				71	COND .05MF 200V	CW 2-05	
144							

SOCKET VOLTAGES AND R.F. VOLTS TAKEN FROM SOCKET TERMINALS TO CHASSIS WITH 1000Ω PER VOLT METER
MEASUREMENTS MADE WITH WAVE CHANGE SWITCH IN BROADCAST BAND POSITION

TUBE	STAGE	PIN NO.								SW OF SOCKET TER AND WITH TION		
										PIN NO.	BIAS	PIN NO.
GCA	INPUT	G1		2-7	260	4-1				4-1	2.8	8-1
GCA	INPUT	G1		2-7	260	4-1				4-1	2.3	8-1
GCS	OSC	G1		2-7	260	4-1						
GKT	1ST I.F.	G1		2-7	260	4-1				4-1	0.2	8-1
GKT	2ND I.F.	G1		2-7	260	4-1				4-1	3.2	8-1
GKT	AVC-AMP	G1		2-7	260	4-1				4-1	2.7	8-1
GH6	TUNING 2ND DET	G1	2-7									
GH6	AVC 2ND DET	G1	2-7									
GF5	A.F.	G1	2-7	245	4-1						2.1	8-1
5Y3	RECTIFIER	P0	2-6	500	8-1							
GL6 (2)	OUTPUT	G2	2-7	410	3-1	265	4-1				20	8-1
5Z3	RECTIFIER	A5		440								

MODEL 680

DI 9558

ED 1

UNITED AMERICAN BOSCH CORPORATION
FACTORY SPRINGFIELD MASS

DATE	DR BY	CH. BY	APPROVED BY E.G.
7-24-39			

MODEL 838
Preliminary
Schematic
Voltage,Parts
Coil Resistances

UNITED AMERICAN BOSCH CORP.

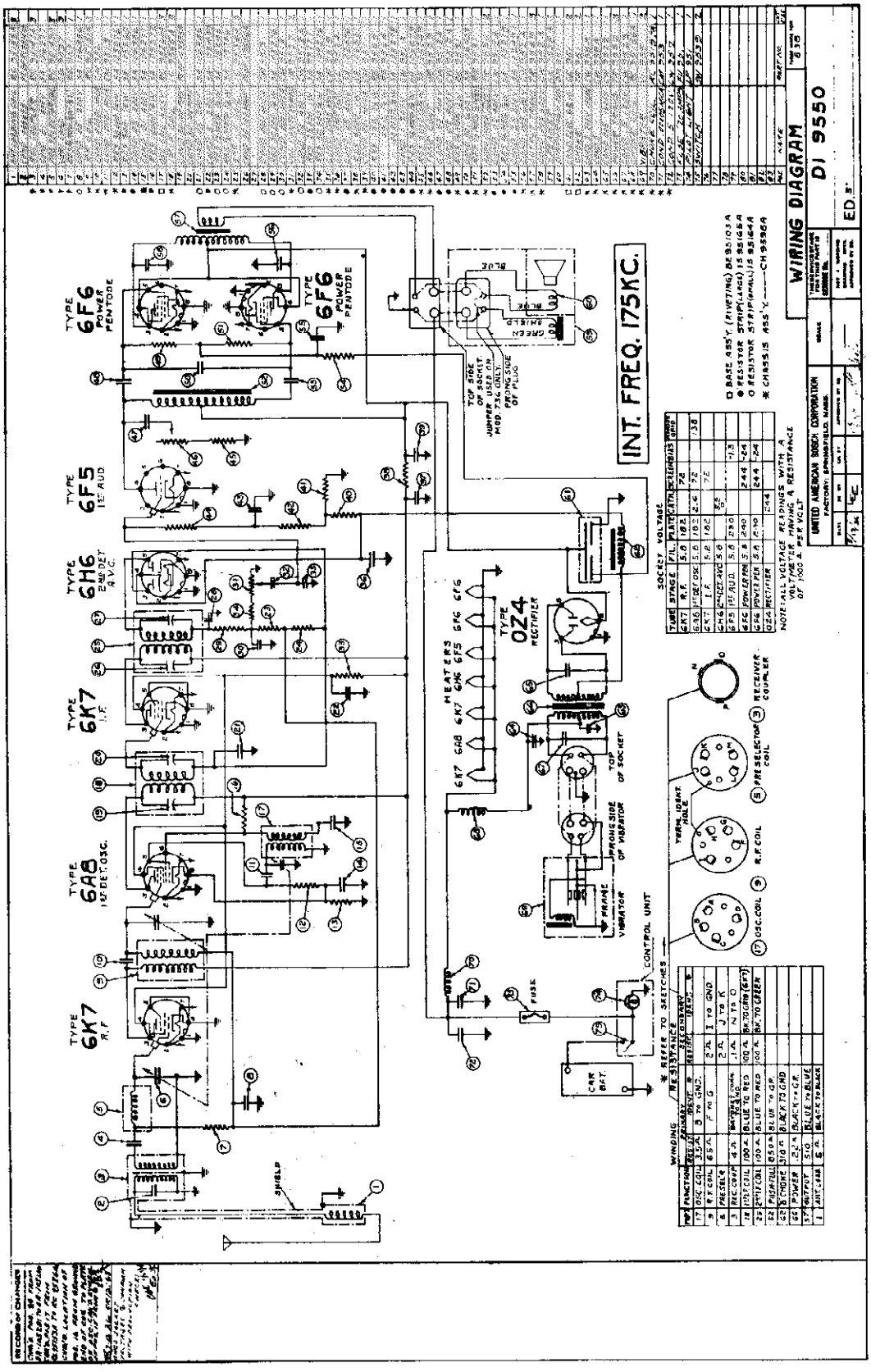

©John F. Rider, Publisher

UNITED AMERICAN BOSCH CORP.

MODELS 736A2, 737A2, 738A2
Schematic, Voltage
Coil Resistances
Parts List

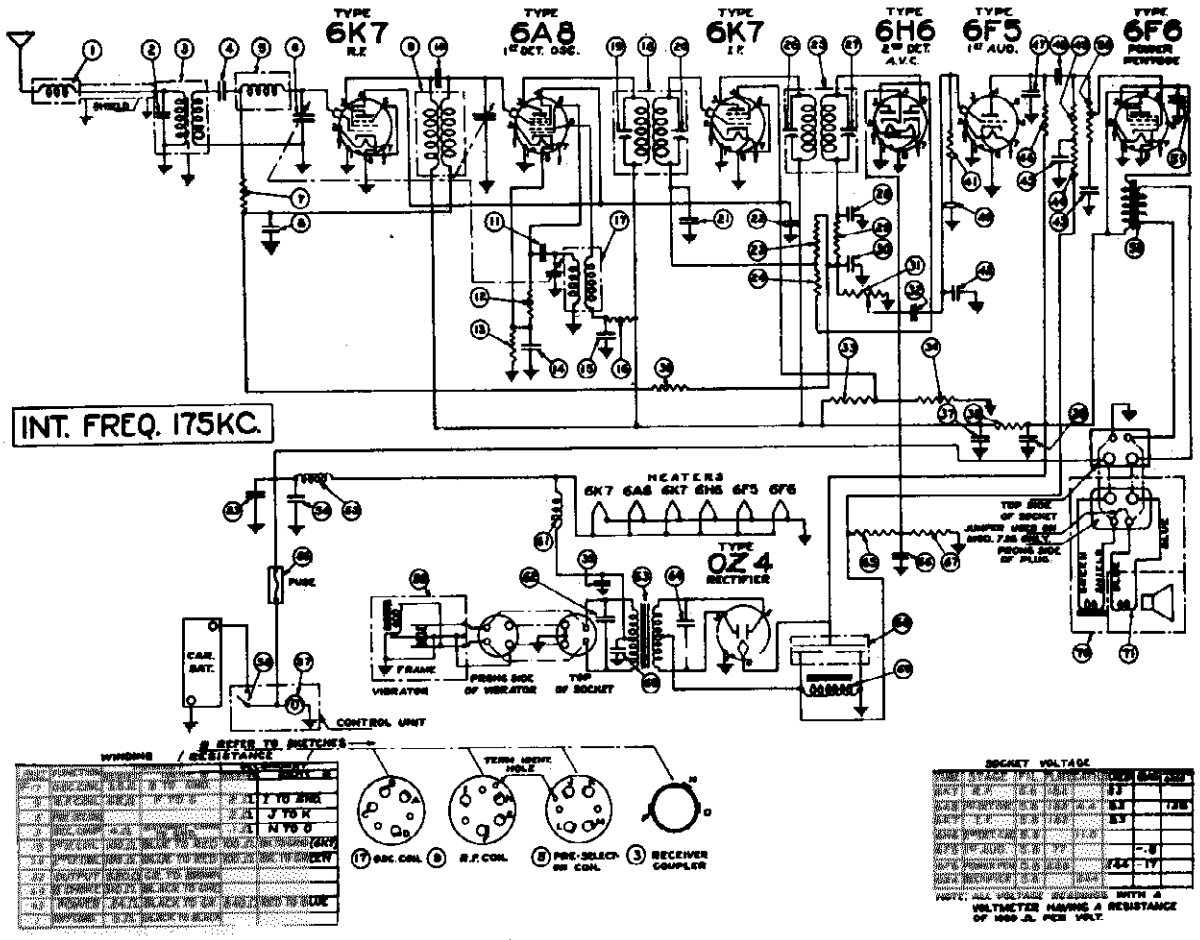

SERVICE PARTS LIST MODEL 736A2

Dia. #	Part #	Description
1		Antenna loading coil - part of RC 96166
		.000076 mfd. condenser - part of RC 96147
2		Resistor coupler
3	RC 96147	.01 mfd. 400 V. cond.
4	RA 106277	Preselector coil
5	RC 96149	Variable cond. assembly
6	CB 9857	100,000 ohm, 1/4 W. res.
7	RE 9854	.05 mfd. 200 V. cond.
8	SA 106386	R.F. coil
9	RC 96161	.0001 mfd. mica cond.
10	CM 961	50,000 ohm, 1/4 W. res.
11	SA 106276	500 ohm, 1/4 W. res.
12	SA 106264	.05 mfd., 200 V. cond.
13	SA 106386	.01 mfd., 400 V. cond.
14	SA 106277	10,000 ohm, 1/4 W. res.
15	SA 106272	Oscillator coil assy.
16	RC 96165	1st I.F. coil
17	ID 9886	50-100 mf. ID condenser - part of ID 9886
18		30-100 mf. condenser - part of ID 9656
19	SA 106388	.05 mfd., 200 V. cond.
20	CM 961	.1 mfd., 200 V. cond.
21	SA 106386	1/8 meg., 1/4 W. res.
22	SA 106282	1 meg., 1/4 W. res.
23	SA 106281	2nd I.F. coil
24	IC 9886	50-100 mf. ID condenser - part of ID 9656
25		30-100 mf. condenser - part of IC 9656
26	CM 9613	.0001 mfd. mica cond.
27	SA 106278	80,000 ohm, 1/4 W. res.
28	CM 9613	.0001 mfd. mica cond.
29	VR 9857	100 meg., 1/4 W. res.
30	SA 106389	.05 mfd., 400 V. cond.
31	SA 100512	50,000 ohm, 1/2 W. res.
32	CM 938	.05 mfd., 200 V. cond.
33	SA 106388	.0001 mfd. mica cond.
34	CM 9613	80,000 ohm, 1/4 W. res.
35	SA 106406	1/8 meg., 1/4 W. res.
36	SA 106401	.25 mfd., 400 V. cond.
37	CM 961	4000 ohm, 1 W. res.
38	SA 106281	.001 mfd. mica cond.
39	CM 961	2 meg., 1/4 W. res.
40	SA 106281	.0001 mfd. mica cond.
41	CM 9619	.001 mfd., 600 V. cond.
42	SA 101403	280,000 ohm, 1/4 W. res.
43	SA 106276	.25 mfd., 200 V. cond.
44	SA 106407	280,000 ohm, 1/4 W. res.
45	SA 106279	.001 mfd., 600 V. cond.
46	SA 106403	800,000 ohm, 1/4 W. res.
47	SA 98346	.05 mfd., 400 V. cond.
48	SA 106276	280,000 ohm, 1/4 W. res.
49	VR 9822	500,000 ohm tone control
50	SA 9822	Output transformer
51	VR 9843	.5 mfd. 120 V. cond.
52	CM 937	.00036 mfd. mica cond.
53	CM 963	Choke coil
54	RC 96187	2½ ampere fuse
55	FU 961	Field coil assembly
56	L2 9830	On-Off switch assembly
57	SW 9830	Vibrator
58	VI 956	

MODEL 737A2

All parts are the same as for Model 736 A2 except for the following parts:

Dia. #	Part #	Description
70	SK 9822	Header speaker assembly

MAIN ASSEMBLIES

CH 9876		Chassis assembly
SK 9822		Header speaker assembly

MISCELLANEOUS

HP 9615	Speaker mounting clamp	
CB 9876	Speaker cable	

Part #	Description
CH 9876	Chassis assembly
SK 9822	Header speaker assembly

MAIN ASSEMBLIES

Part #	Description
FP 78381	Clamp (Battery, antenna & speaker cables)
BK 96176	Bracket for loading coil

CABLES & CABLE ASSEMBLIES

CB 9870	Battery cable assembly
TU 1014	Shielded loom

SOCKETS

SO 956	Speaker socket (4 prong)
SO 955	Tube socket (metal tube)
SO 9811	Tube socket (metal tube)

WASHERS, BUSHINGS & SPACERS

WA 1048	Washers for mounting studs
WA 6-8 CA	Lock washer for mtg. studs
BR 955	Spacer for variable cond.
	Rubber bushing for variable condenser mounting
IS 1002	Rubber bushing for loading-coil mtg.
WA 7-10 CA	Washer for loading-coil mtg.

SCREWS & STUDS

SD 957	Mounting studs
FF 104892	Thumb screw

MISCELLANEOUS

MT 103475	Mtg. nuts for loading coil
SH 9533	Flexible drive shaft (8 used)
SW 9540	Switch (complete)
SA 106764	Suppressor (ignition coil)
SA 105500	Suppressor condenser cable assy.
RC 96146	Shielding coil & cable assy.
KN 9851	Rubber plugs for alignment holes
KN 9851	Tone control knob (rubber)
IS 96159	Mtg. assy. for grid bias coil
PA 957	Grill cloth

MODEL 738A2

All parts are the same as for Model 736 A2 except for the following parts:

Dia. #	Part #	Description
70	SK 9827	Bulkhead speaker

MAIN ASSEMBLIES

CH 9876		Chassis assembly
SK 9827		Bulkhead speaker assy.

MISCELLANEOUS

CB 9876	Speaker cable

ELECTRICAL SPECIFICATIONS

Type and Number of Tubes ---------- 1 6A8, 2 6K7, 1 6H6, 1 6F5, 1 6F6, 1 0Z4-Total 7
Battery Current (6.3-volt Battery) ---------- 8A to 1400 K.C.
Light ---------- 3.0 Watts
Unfiltered Output ---------- 4.0 Watts
Frequencies ---------- I.F. 175 K.C., 1400 K.C., 1500 K.C.

©John F. Rider, Publisher

MODELS 736A2, 737A2, 738A2

UNITED AMERICAN BOSCH CORP.

Socket, Trimmers
Circuit Data, Changes
Alignment, Notes

LOCATING TROUBLE IN CHASSIS

To locate a short, open or defective unit which causes low or no "B" voltage, disconnect the power pack from the receiver section by disconnecting the two red leads at each end of the 4000 ohm resistor #36 in the power pack that pass into the receiver section. Check the voltage which the input to the receiver should be approximately 250 Volts. If the voltage is incorrect, the trouble is definitely in the power pack and all component parts should be checked.

Conversely, if the voltage reading proves to be correct, the trouble is in the receiver section and all its parts should be checked.

In locating a "short" or "open" in the filament circuit, the power pack can be disconnected from the filament circuit by removing the red lead connected with the RF battery choke #35. This will connect only the power pack in the filament circuit; and if the short or open is corrected, it will prove that the trouble is in the receiver section.

WEAK OR INSENSITIVE AFTER REALIGNMENT

Check coils and associated circuits in the different "stages" of the receiver for proper resistance values.

LOW POWER OUTPUT WITH "B" VOLTAGE CORRECT

Check the speaker field coil, voice coil and associated audio circuit for resistance continuity and defective 6P6 plate by-pass condenser.

All riveted component parts can be removed merely by punching out the rivets with a small-diameter straight side punch. Replacement parts can be secured with small machine screws and nuts.

In changing the power transformer, it is necessary only to remove the four machine screws. When replacing the power transformer, be sure to tighten these screws securely.

GENERAL DESCRIPTION

The Models 736, 737 and 738 American-Bosch All-Wave Car Radio Receivers are designed, manufactured and tested to give radio reception in the type of car for which each is intended, under conditions of average signal strength and interference encountered in the locality in which the car is normally operated.

The Models 736, 737 and 738 are seven-tube superheterodyne car-radios, differing only in the type of loud speaker equipment used. In the Model 736, a self-contained speaker is incorporated in the receiver housing. The Model 736 has a separate housing for mounting on the header bar directly above the windshield. A separate bulkhead-mounted speaker is used with the Model 738 receiver.

The Models 736, 737 and 738 are equipped with three spark traps: an internal, tuned spark trap in the battery circuit to assist in the suppression of ignition interference; an external spark trap connected in series with the battery cable; and an antenna spark trap provided in the antenna circuit. The use of these spark traps makes the installation of additional suppression equipment unnecessary in most cars.

LINE-UP CAPACITOR ADJUSTMENTS

All the adjustable capacitors, commonly called trimmer condensers, are very accurately adjusted at the factory, and will not need any further adjustment unless a coil unit, i.f. transformer is changed, the set is taken apart in the field, or the receiver is in need of realignment. DO NOT attempt to change the setting of any of the trimmer condensers unless it is definitely known that adjustment is necessary, and a high grade modulated test oscillator and an output meter are available. Then proceed as follows, referring to Figs. 1 and 2:

NOTE: Before aligning the gang-condenser trimmers, on the bottom of the gang condenser, it will be necessary to remove the three rubber plugs from the bottom of the receiver housing. The screwdriver used should UNDER NO CIRCUMSTANCES BE RESTURNED.

1. Set test oscillator to 175 K.C.
2. Set condenser gang to approximately 600 K.C. This will be at a point where the condenser plates are nearly all in mesh.
3. Connect output meter across voice coil of speaker. This may be done by connecting one lead of the output meter to the blue lead of the speaker terminal strip and the other lead to the frame of the chassis. The impedance of the voice coil is 3.0 ohms.
4. Apply test signal to grid cap of 6K7 I.F. tube through a .1 mfd. blocking condenser and adjust trimmers #26 and #27 for maximum output reading on output meter.
5. Apply test signal to grid cap of 6A8 first detector-oscillator and adjust trimmers #19 and #20 to maximum output.
6. Set test oscillator to 1600 K.C. and rotate condenser gang until the plates are wide open. Place a piece of paper (approximately .015" thick) between the rotor and stator plates at the top of the gang and close the rotor down to this spacing. This is the exact setting of the condenser gang for the receiver oscillator at 1600 K.C. and should be checked carefully as the resulting alignment of the receiver is directly dependant upon it.
7. Adjust trimmer #1 to maximum output and then remove the paper gauge.
8. Set test oscillator and condenser gang to 1400 K.C.
9. Apply test signal to grid cap of 6K7 R.F. tube and adjust trimmer "B" to maximum output.
10. Apply test signal to antenna lead thru a .002 mfd. condenser and adjust trimmer "C" to maximum output.
11. Check sensitivity at several points.

ENGINEERING CHANGES

On early Models 736, 737 and 738 the following changes were made to make these Models 736 A2, 737 A2 and 738 A2:

1. The type 6J7 R.F. tube was changed to a type 6K7.
2. The .005 mfd. 600 volt condenser (DW 922) from the plate of the type 6P6 output tube to ground was changed to a .008 mfd. 600 volt condenser (DW 9564).
3. A .002 mfd. condenser (DW 9565) was added from the grid of the type 6P6 audio tube to ground.
4. The type 6A6 detector-oscillator tube was placed on A.V.C. This change was made by removing the jumper from terminal on R.F. coil to ground and connecting this terminal by a jumper to the terminal on the antenna coil to which the red and yellow lead and the 100,000 ohm resistor are connected.

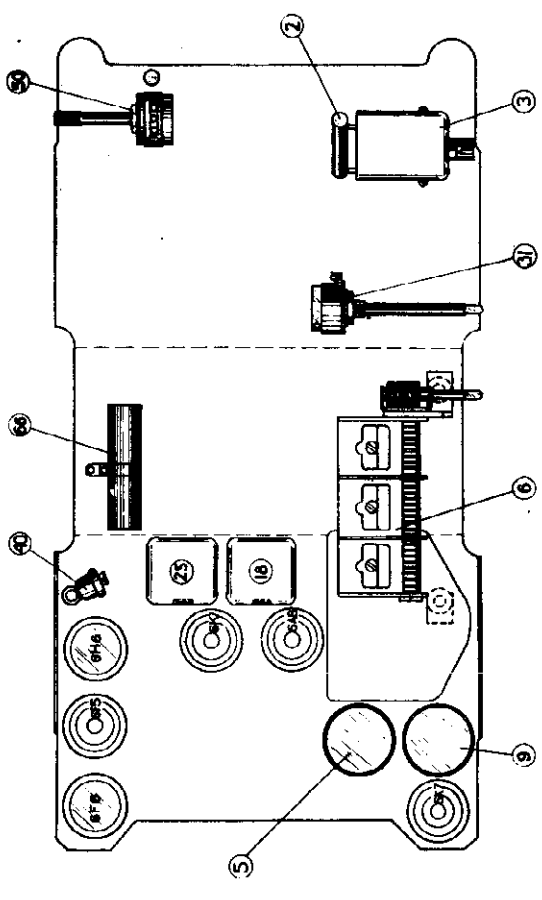

INSIDE VIEW SHOWN WITH DOUBLE-HINGES OF CHASSIS OPENED OUT.

Figure No. 1

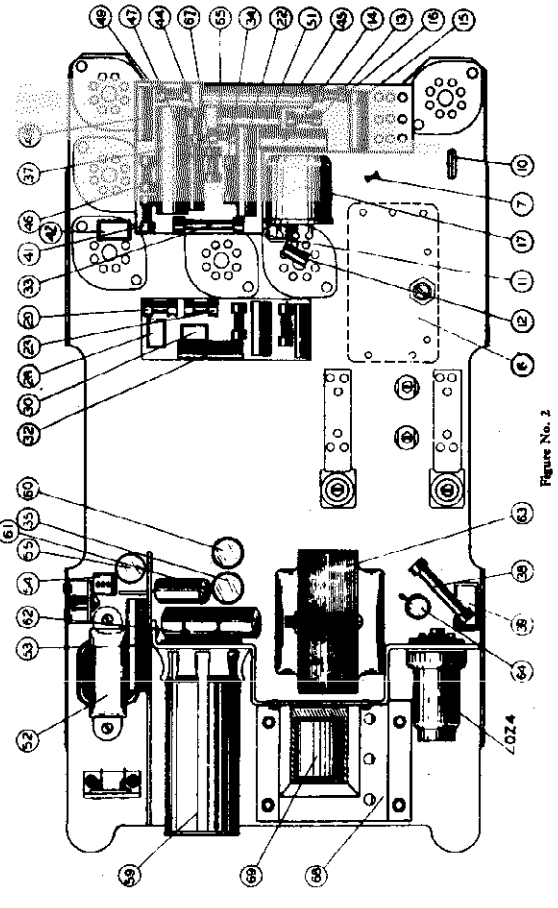

OUTSIDE VIEW SHOWING WITH DOUBLE-HINGES OF CHASSIS OPENED OUT.

Figure No. 2

©John F. Rider, Publisher

UNITED MOTORS SERVICE

MODEL 601662 Chevrolet
Schematic

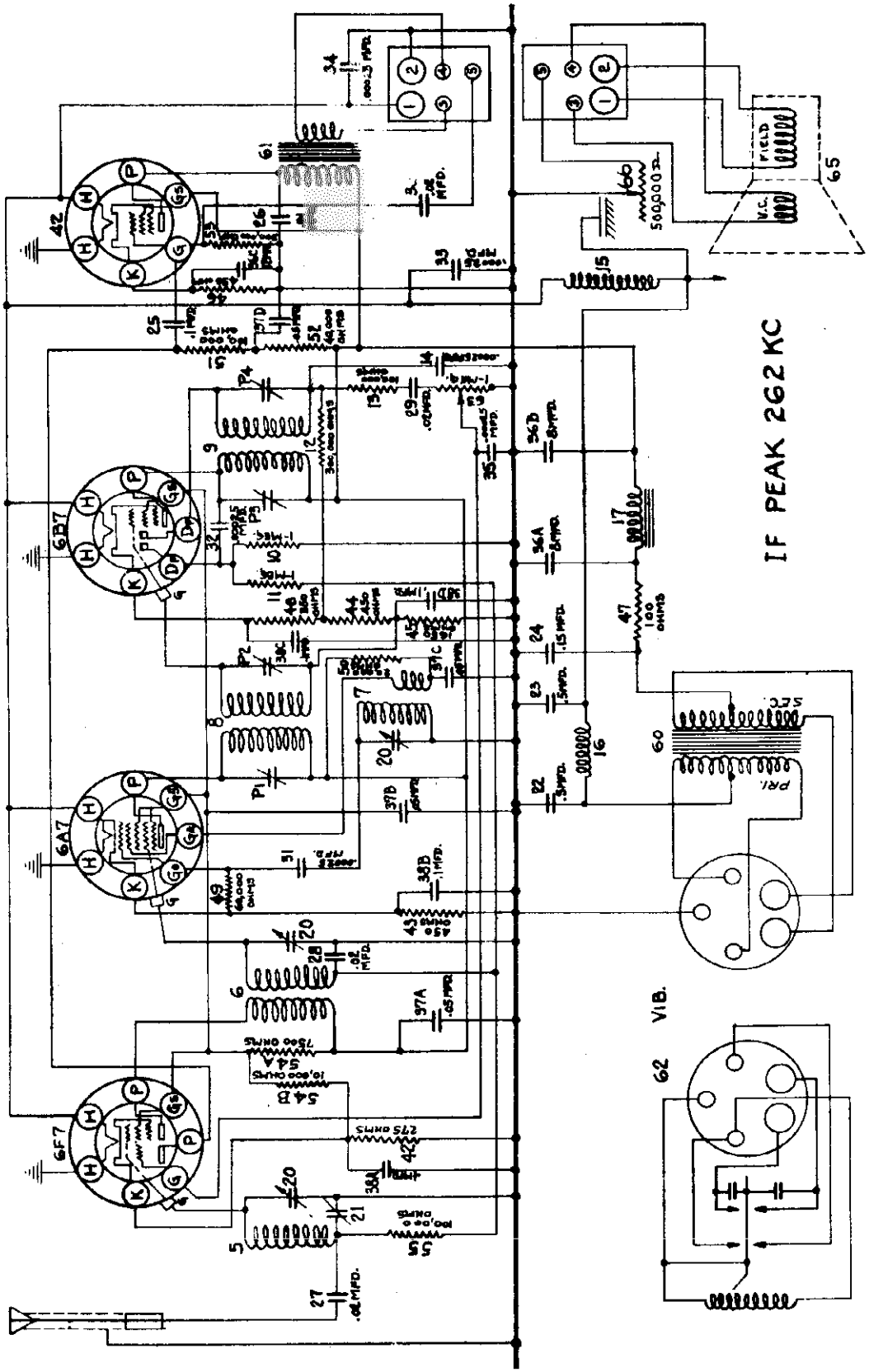

MODEL 601662 Chevrolet
Socket,Trimmers
Chassis

UNITED MOTORS SERVICE

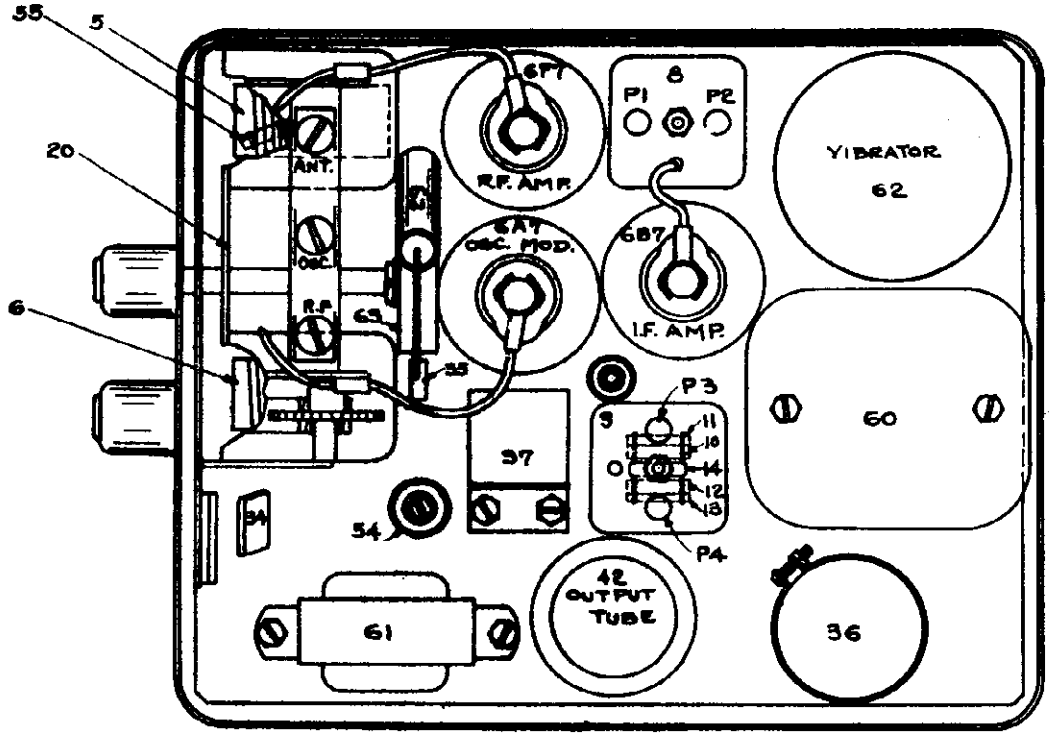

Top View

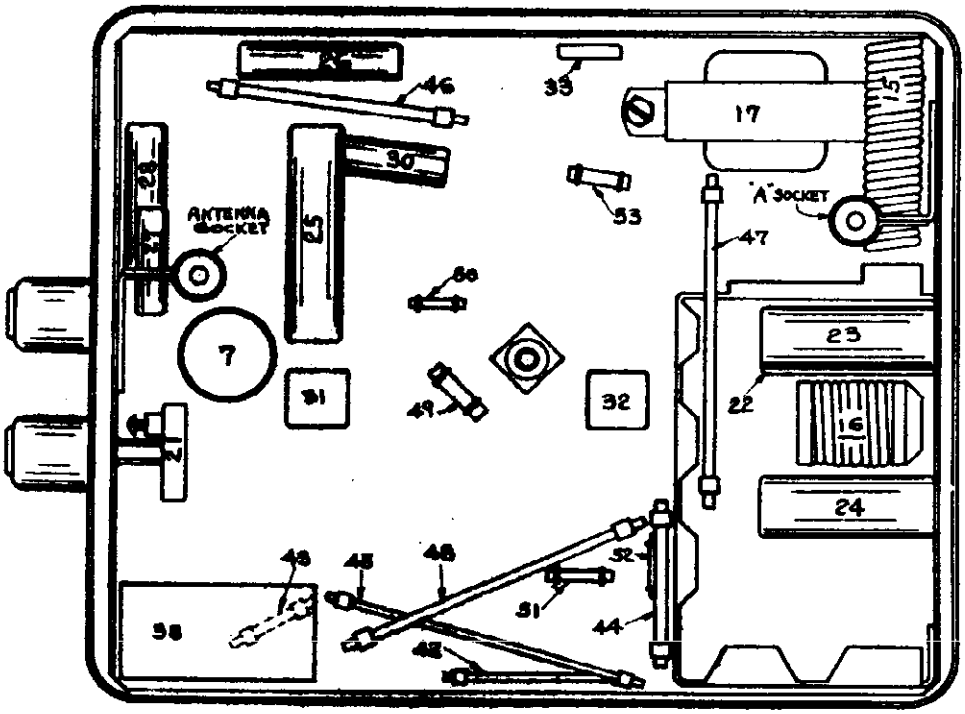

Bottom View

UNITED MOTORS SERVICE

MODEL 601662 Chevrolet
Alignment, Voltage

GENERAL: The Chevrolet Model 601662 is a four tube, superheterodyne auto radio with a header speaker. It is designed specifically for the 1935 Model Chevrolet automobiles and can be installed on either the "Standard" or "Master" Models. Two types of tuning controls are used. One type mounts on the bottom flange of the instrument panel of "Standard" Chevrolets and the other mounts in the instrument panel of "Master" Chevrolets.

TUBE COMPLEMENT

Type	Function
6F7	R.F.--1st Audio Amplifier
6A7	Detector--Oscillator
6B7	I.F. Amplifier--2nd Det.--A.V.C.
42	Power Output

CIRCUIT DESCRIPTION

This receiver requires the use of four tubes, three of which are the dual purpose type. The circuit is the conventional superheterodyne type that does not involve the use of any regeneration which might affect its stability.

The antenna circuit of this receiver is an improved type designed for use with undercar antenna systems. An exceptionally high gain is obtained in this circuit by resonating it with the car antenna. This results in higher sensitivity and a lower station hiss level. A separate adjustment is provided on the receiver to permit accurate alignment of this circuit to the car antenna.

The output transformer is mounted on the receiver chassis because of the space limitation in the Header type speaker.

PEAKING PROCEDURE

The only way the circuits of this receiver can be peaked properly is with the use of a calibrated oscillator and an output meter. The circuits are very carefully adjusted at the factory and do not need any further adjustment unless tampered with in the field or a coil has been replaced. It is, therefore, advisable not to attempt any adjustments unless it is definitely known that an adjustment is necessary.

Connecting Output Meter

Connect the output meter leads to the chassis frame and to the plate prong of the type 42 output tube. The plate prong can be located by looking at the bottom of the tube with the filament prongs toward you. The first prong to the right of the filaments is the plate prong. Make sure that the meter is protected with a series D.C. blocking condenser.

IMPORTANT

Due to the high sensitivity of these receivers, the receiver chassis must be in its case before making any adjustments. This is necessary in order to obtain accurate adjustments and to prevent oscillation due to lack of the shielding effect of the receiver case.

Peaking I.F. Stages at 262 K.C.

(a) Connect the ground lead of the test oscillator to the chassis frame. Connect a .5 mfd. condenser in series with the other lead and connect this lead to the grid cap of the 6A7 tube, leaving the tube's grid clip in place.

(b) Set the test oscillator on 262 kilocycles.

(c) Turn the volume control of the receiver on full.

(d) Peak the I.F. trimmers P-4 and P-3 on the 2nd I.F. coil, Illus. #9 on Fig. 2.

(e) Then peak each of the trimmers P-2 and P-1 on the 1st I.F. coil, Illus. #8 on Fig. 2.

NOTE: In order to insure accurate settings of the I.F. trimmers the above adjustments should be repeated using the lowest oscillator output that will give a reasonable output meter scale deflection. Make all adjustments for maximum output.

Peaking Gang Condenser at 1530 K.C.

(a) Connect the output of the test oscillator to the antenna connection of the receiver and to the chassis ground. (Do not use the .5 mfd. condenser that was required in aligning the I.F. stages.)

(b) Turn the rotor plates of the gang condenser until they are COMPLETELY OUT OF MESH.

(c) Set the test oscillator on 1530 kilocycles.

(d) Adjust the trimmer for the oscillator section of the gang condenser (middle section) CAREFULLY for maximum output. Then adjust the trimmers for the "R.F." and "ANT." sections of the gang condenser also for maximum output.

Peaking Gang Condenser at 1400 K.C. and Compensating Condenser at 600 K.C.

(a) Set the test oscillator at 1400 kilocycles.

(b) Turn the condenser rotor plates until the 1400 K.C. signal from the test oscillator is tuned in with maximum output.

(c) Readjust the parallel trimmers for the "R.F." and "ANT." sections of the gang condenser (shown on Fig. 2) for maximum output. DO NOT DISTURB the setting of the "OSC." section of the gang condenser as this is adjusted at 1530 K.C. only, and any further adjustments at this point will affect both the tuning range of the receiver and the tracking of its circuits.

(d) Set the test oscillator on 600 kilocycles.

(e) Turn the condenser rotor plates until the 600 K.C. signal from the test oscillator is tuned in with maximum output.

(f) Peak the antenna compensating condenser (Illus. #21 on Fig. 3) for maximum output. Re-tune the condenser plates for maximum output. Repeat these operations alternately until no further improvement in output can be noted.

(g) Reset the test oscillator on 1400 kilocycles.

(h) Turn the condenser rotor plates until the 1400 K.C. signal is tuned in with the maximum output.

(i) Readjust the trimmer for the "ANT." section of the gang condenser CAREFULLY for maximum output.

Adjusting the Compensating Condenser to Car Antenna

After the "ANT." trimmer of the gang condenser has been correctly set according to preceding information, it will require no further adjustment. It will be necessary, however, to reset the "antenna compensating condenser" (Illus. #21 on Fig. 3) to the car antenna when installing the receiver in a car in order to compensate for the wide range of antenna capacities being used. This is done in the following manner:

(a) Tune the receiver to a weak broadcast station between 570 to 640 K.C.

(b) Peak the "antenna compensating condenser" for maximum output, rocking the receiver dial and adjusting the compensating condenser alternately until no further improvement in output can be obtained.

CAUTION: Do not touch the adjustment of the parallel trimmer for the "ANT." section of the gang condenser after the receiver is installed on a car.

VOLTAGE CHART

The voltages shown below are average readings taken from the tube socket contacts to the chassis frame, and will vary ± 10% when the set is tested on a 6 volt battery due to differences in characteristics of vibrators and tubes. All readings were taken with a 1000 ohm per volt meter.

TUBE BASE DIAGRAM SYMBOLS*

Type	Function	H	P	Pt	Gs	Ga	Go	Gt	K
6F7	R.F.--1st Aud.	6	220	60	100	-	-	0	3.0
6A7	Det.--Osc.	6	220	-	100	140	0	-	3.0
6B7	I.F. Amp.--Det.	6	220	-	100	-	-	-	12.0
42	Output	6	210	-	220	-	-	-	15.0

NOTE: Ampere drain 6.2 amperes at 6 volts.
Milliampere drain from B supply is 56 M.A.

CODE FOR SYMBOLS

(These symbols also appear on the Circuit Diagram)

H--Heater
P--Plate (Pentode)
Pt--Plate (Triode)
Gs--Screen grid
Ga--Oscillator Plate
Go--Oscillator grid
Gt--Grid (Triode)
K--Cathode

©John F. Rider, Publisher

MODEL 627 Delco
Schematic

UNITED MOTORS SERVICE

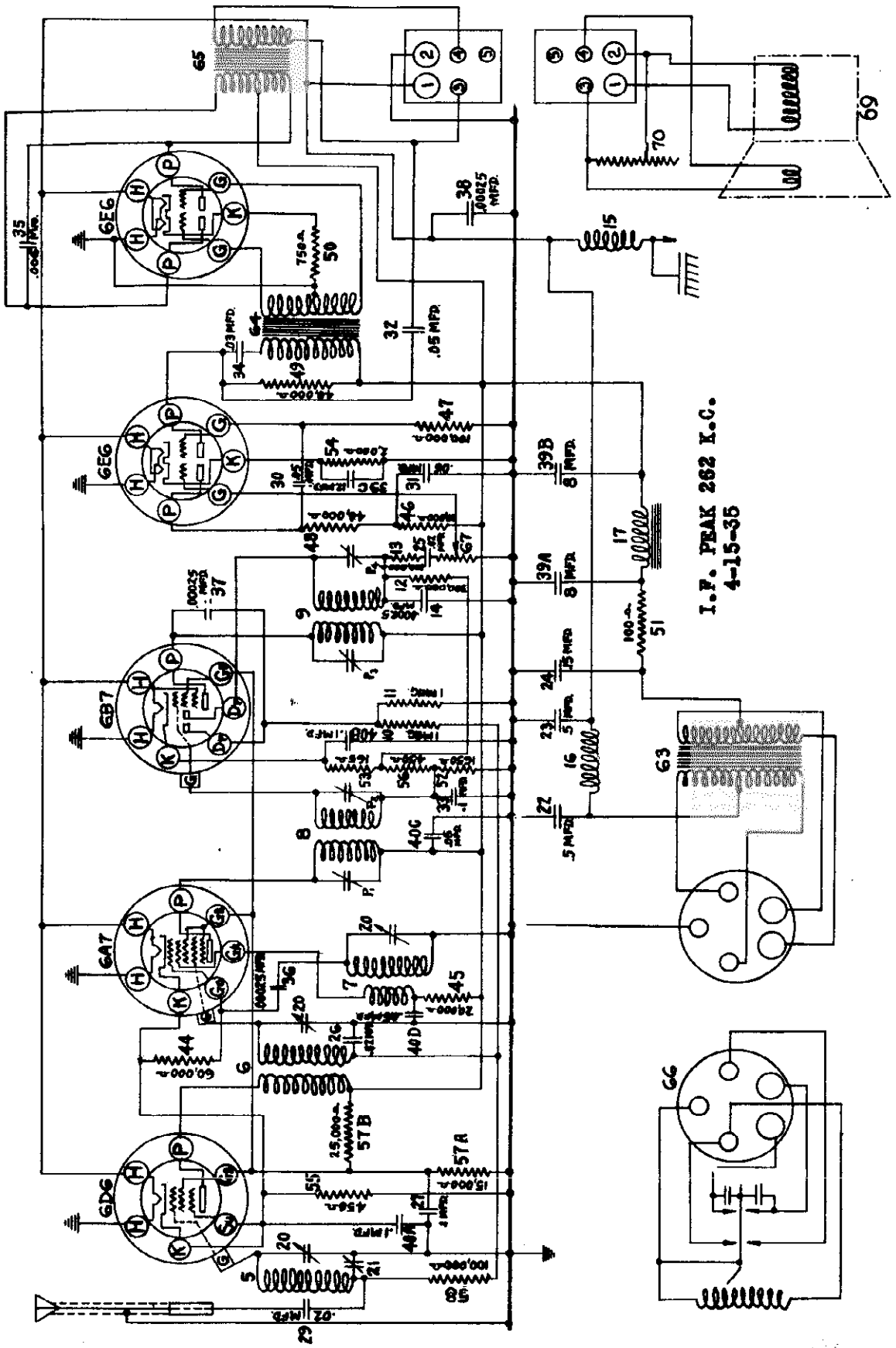

©John F. Rider, Publisher

UNITED MOTORS SERVICE

MODEL 627 Delco
Socket, Trimmers
Chassis

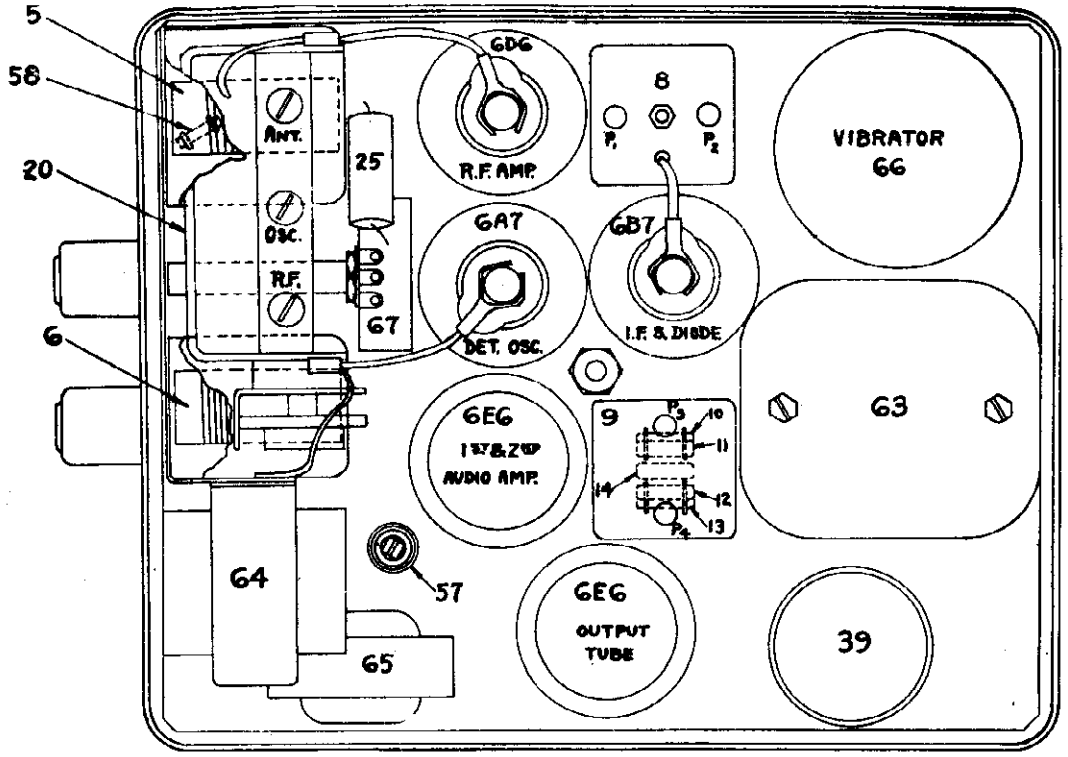

PARTS LAYOUT--Top View

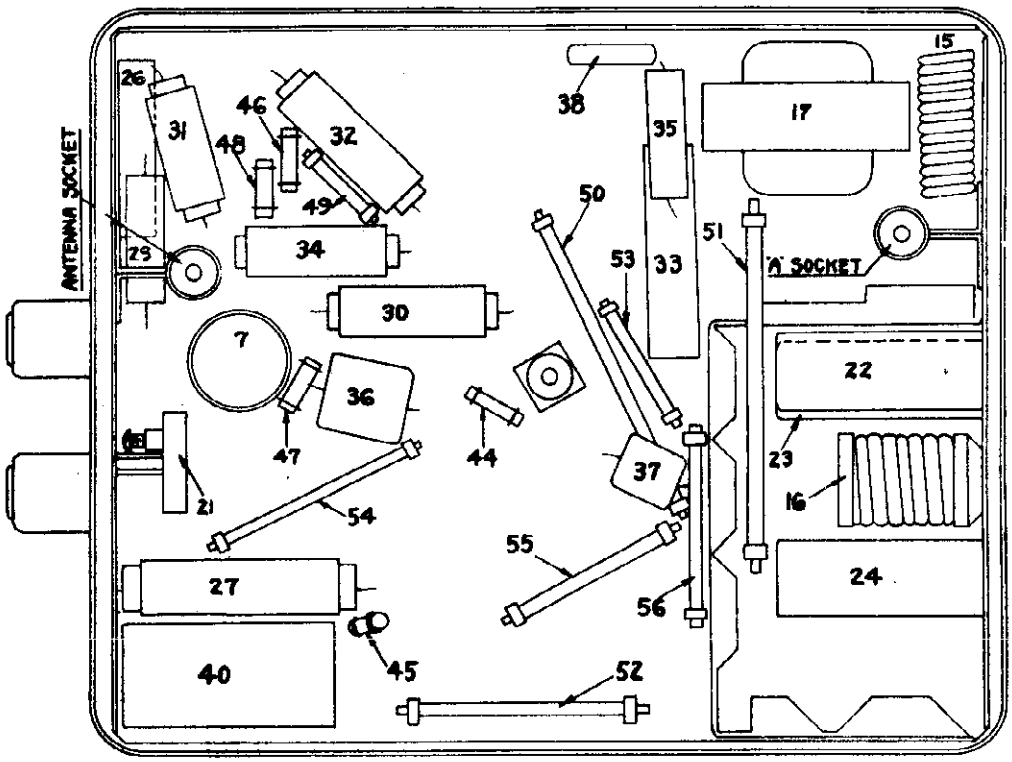

PARTS LAYOUT--Bottom View

©John F. Rider, Publisher

MODEL 627 Delco
Alignment
Voltage

UNITED MOTORS SERVICE

*TUBE BASE DIAGRAM SYMBOLS

Type	Function	H	P	P1	P2	Gs	Ga	GO	G	Su	K
6D6	R.F. Amp.	6	230	-	-	95	-	-	0	5.6	5.6
6A7	Det.-Osc.	6	230	-	-	95	145	-	0	-	5.6
6B7	I.F. Amp.-Det.	6	230	-	-	95	-	-	8	-	11
6E5	1st & 2nd Aud.	6	-	100	110	-	-	-	0	-	15
6E6	Output	6	-	230	230	-	-	-	0	1	21

NOTE: Ampere drain of set at 6 volts is 6 amperes.
Milliampere drain from B supply is 55 M.A.

VOLTAGE CHART

The voltages shown below are average readings taken from the tube socket contacts to the chassis frame, and may vary plus or minus 10% when the set is tested on a 6 volt battery. This is due to variations in characteristics of vibrators and tubes. All readings taken with a 1000 ohm per volt meter.

PEAKING PROCEDURE

Connecting Output Meter

Connect the terminals of the output meter to the two plate prongs of the type 6E6 output tube which can be determined by looking at the bottom of the tube with the filament prongs toward you. The prongs located on each side of the filaments are the plate prongs--make sure that the meter is protected with a series condenser.

IMPORTANT

Due to the high sensitivity of these receivers, the receiver chassis must be in its case before making any adjustments. This is necessary in order to obtain accurate adjustments and to prevent oscillation due to lack of the shielding effect of the receiver case. Also, the following procedure should be followed closely if the "Syncro-Tuning" Circuit is to function properly.

1. Peaking I.F. Stages at 262 K.C.

(a) Connect the ground lead of the test oscillator to the chassis frame. Connect a .5 mfd. condenser in series with the other lead and connect this lead to the grid cap of the 6A7 tube, leaving the tube's grid clip in place. (The .5 mfd. condenser is necessary to prevent the oscillator circuit of the receiver from affecting the I.F. adjustments.)

(b) Set the test oscillator on 262 kilocycles.

(c) Turn the volume control of the receiver on full.

(d) Peak each of the I.F. trimmers P3 and P4 on the 2nd I.F. coil, (Illus. #9 on Fig. 3).

(e) Then peak each of the trimmers P1 and P2 on the 1st I.F. coil, (Illus. #8 on Fig. 3).

(f) In order to insure accurate settings of the I.F. trimmers, the above adjustments should be repeated using the lowest oscillator output that will give a reasonable output meter scale deflection. Make all adjustments for maximum output.

2. Peaking Oscillator Section of Gang Condenser at 1540 K.C.

(a) Connect the output of the test oscillator to the antenna connection of the receiver and to the chassis ground. (Do not use the .5 mfd. condenser that was required in aligning the I.F. stages.)

(b) Turn the rotor plates of the gang condenser until they are COMPLETELY OUT OF MESH.

(c) Set the test oscillator on exactly 1540 kilocycles.

(d) Adjust the parallel trimmer for the "OSC". section (middle section) CAREFULLY for maximum output. Then adjust the trimmers for the other two sections of the gang condenser, also for maximum output.

3. Tracking "Syncro-Tuning" Circuit

(a) Set the test oscillator on 1400 kilocycles. (Leave test oscillator connected to ant. and gnd. of receiver.)

(b) Turn the condenser rotor plates until the 1400 K.C. signal from the test oscillator is tuned in with maximum output.

(c) Readjust the parallel trimmers for the "ANT." and "R.F." sections of the gang condenser (shown on Fig. 2) for maximum output. DO NOT DISTURB the setting of the oscillator trimmer as this is adjusted at 1540 K.C. only and any adjustment at this point will affect both the tuning range of the receiver and the tracking of its circuits.

NOTE: In order to accurately set the "ANT." trimmer of the condenser gang at 1400 K.C. it will be necessary to make a preliminary adjustment of the "antenna compensating condenser" (Illus. #21 on Fig. 3) before installing the receiver on a car.

(d) Set the test oscillator on 600 kilocycles.

(e) Turn the condenser rotor plates until the 600 K.C. signal from the test oscillator is tuned in with maximum output.

(f) Peak the antenna compensating condenser (Illus. #21 on Fig. 3) for maximum output. Re-tune the gang condenser for maximum output. Repeat these operations alternately until no further improvement in output can be obtained.

(g) Reset the test oscillator on 1400 kilocycles.

(h) Turn the condenser rotor plates until the 1400 K.C. signal is tuned in with maximum output.

(i) Readjust the trimmer for the "ANT." section of the gang condenser CAREFULLY for maximum output.

4. Adjusting Compensating Condenser to Car Antenna

After the "ANT." trimmer of the gang condenser has been correctly set according to preceding information, it will require no further adjustment. It will be necessary, however, to reset the "antenna capacity compensating condenser" (Illus. #21 on Fig. 3) to the car antenna when installing the receiver in a car in order to compensate for the wide range of antenna capacities being used. This is done in the following manner:

(a) Tune the receiver to a weak broadcast station between 570 to 640 K.C.

(b) Peak the "antenna capacity compensating condenser" for maximum output, rocking the receiver dial and adjusting the compensating condenser alternately until no further improvement in output can be obtained.

CAUTION: Do not touch the adjustment of the parallel trimmer for the "ANT." section of the gang condenser after the receiver is installed on a car.

©John F. Rider, Publisher

UNITED MOTORS SERVICE

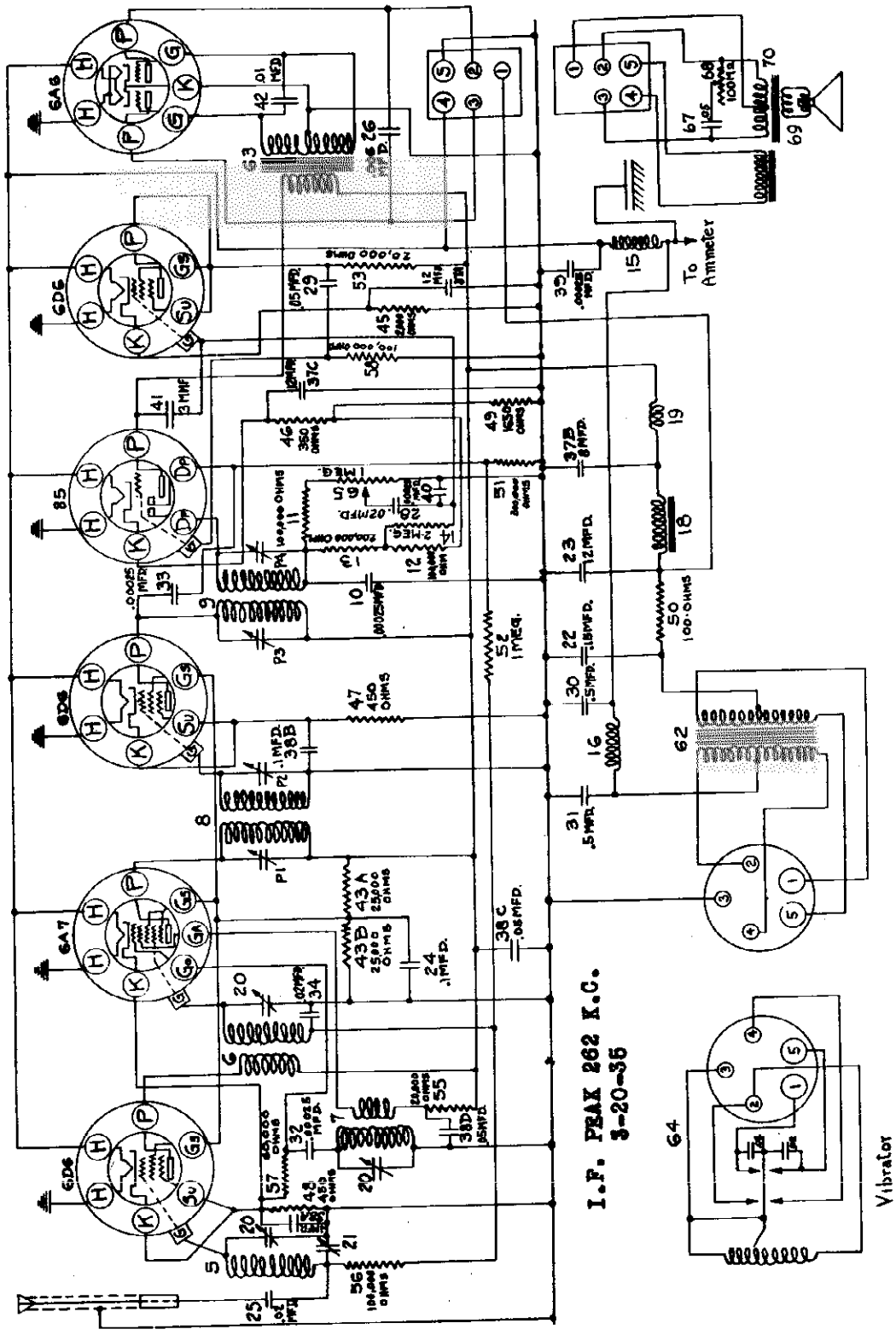

DELCO MODEL 628 CIRCUIT DIAGRAM

©John F. Rider, Publisher

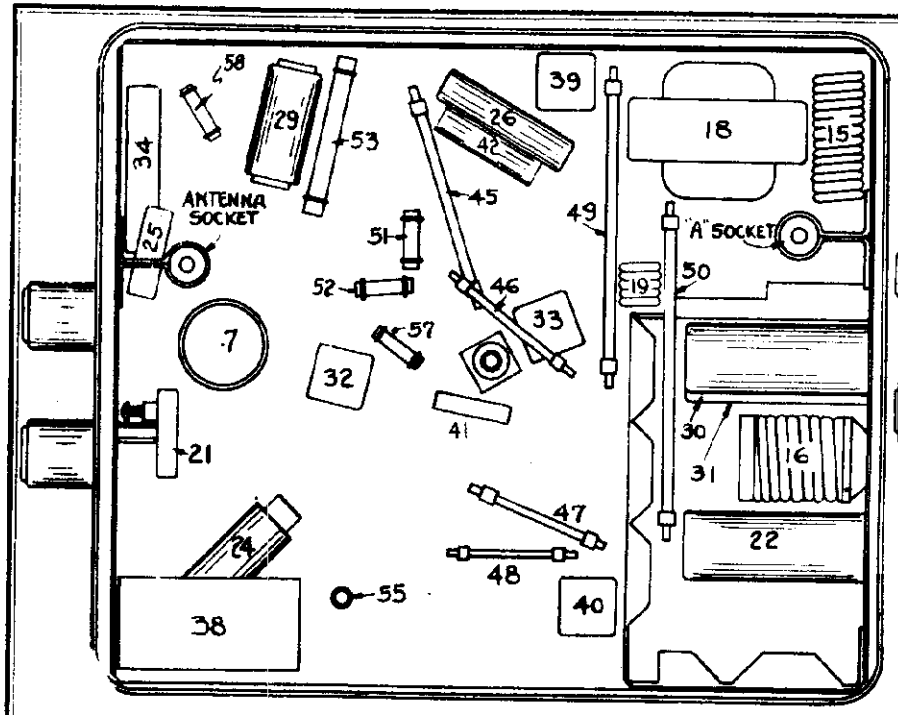

PARTS LAYOUT (Bottom View)

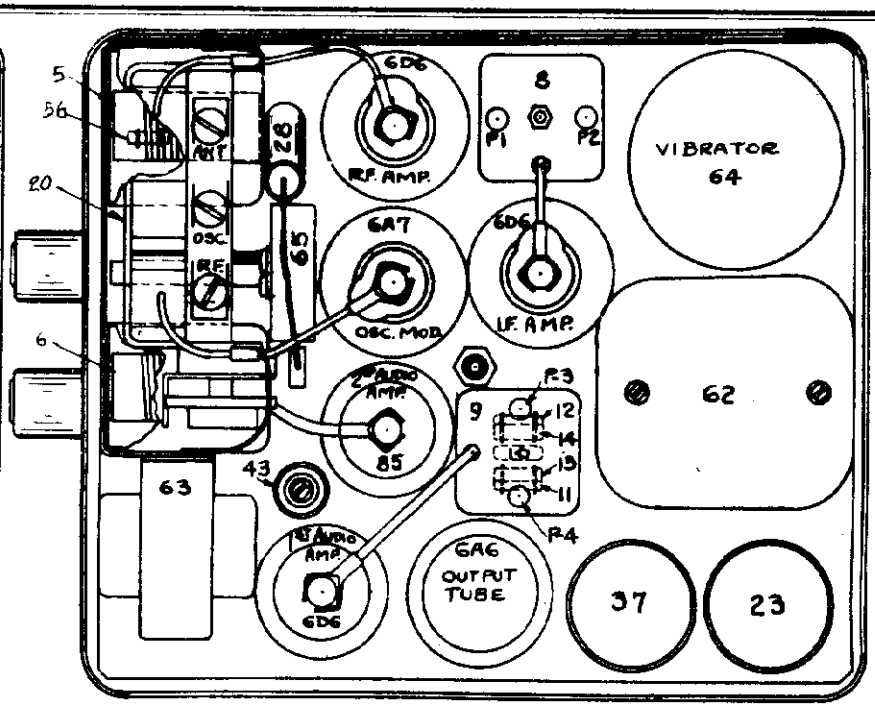

PARTS LAYOUT (Top View)

VOLTAGE CHART

The voltages shown below are average readings taken from the tube socket contacts to the chassis frame, and may vary plus or minus 10% when the set is tested on a 6 volt battery. This is due to variations in characteristics of vibrators and tubes. All readings taken with a 1000 ohm per volt meter.
NOTE: Ampere drain of set at 6 volts is 6.8 amperes. Milliampere drain from B supply is 60 M.A.

*TUBE BASE DIAGRAM SYMBOLS

Type	Function	H	P	Gs	Ga	Go	Su	K
6D6	R.F. Amp.	6	210	70	-	-	4	4
6A7	Det.-Osc.	6	210	70	150	0	-	4
6D6	I.F. Amp.	6	210	70	-	-	4	4
85	Det.-2nd A.F.	6	200	-	-	-	-	13
6D6	1st A.F. Amp.	6	90	90	-	-	90	13
6A6	Output	6	200	-	-	-	-	0

©John F. Rider, Publisher

©John F. Rider, Publisher

PEAKING PROCEDURE

Connecting Output Meter

Connect the terminals of the output meter to the two plate prongs of the type 6A6 output tube which can be determined by looking at the bottom of the tube with the filament prongs toward you. The prongs located on each side of the filaments are the plate prongs--make sure that the meter is protected with a series condenser.

IMPORTANT

Due to the high sensitivity of these receivers, the receiver chassis must be in its case before making any adjustments. This is necessary in order to obtain accurate adjustments and to prevent oscillation due to lack of the shielding effect of the receiver case. Also, the following procedure should be followed closely if the "Snyoro-Tuning" circuit is to function properly.

1. Peaking I.F. Stages at 262 K.C.

   (a) Connect the ground lead of the test oscillator to the chassis frame. Connect a .5 mfd. condenser in series with the other lead and connect this lead to the grid cap of the 6A7 tube, leaving the tube's grid clip in place. (The .5 mfd. condenser is necessary to prevent the oscillator circuit of the receiver from affecting the I.F. adjustments.)

   (b) Set the test oscillator on 262 kilocycles.

   (c) Turn the volume control of the receiver on full.

   (d) Peak each of the I.F. trimmers on the 2nd I.F. coil, Illustration #9 on Fig. 3.

   (e) Then peak each of the trimmers on the 1st I.F. coil, Illustration #8 on Fig. 3.

   (f) In order to insure accurate settings of the I.F. trimmers the above adjustments should be repeated using the lowest oscillator output that will give a reasonable output meter scale deflection. Make all adjustments for maximum output.

2. Peaking Oscillator Section of Gang Condenser at 1540 K.C.

   (a) Connect the output of the test oscillator to the antenna connection of the receiver and to the chassis ground. (Do not use the .5 mfd. condenser that was required in aligning the I.F. stages.)

   (b) Turn the rotor plates of the gang condenser until they are COMPLETELY OUT OF MESH.

   (c) Set the test oscillator on exactly 1540 kilocycles.

   (d) Adjust the parallel trimmer for the "OSC." section (middle section) CAREFULLY for maximum output. Then adjust the trimmers for the other two sections of the gang condenser, also for maximum output.

3. Tracking "Syncro-Tuning" Circuit

   (a) Set the test oscillator on 1400 kilocycles. (Leave test osicllator connected to ant. and gnd. of receiver.)

   (b) Turn the condenser rotor plates until the 1400 K.C. signal from the test oscillator is tuned in with maximum output.

   (c) Readjust the parallel trimmers for the "ANT." and "R.F." sections of the gang condenser (shown on Fig. 2) for maximum output. DO NOT DISTURB the setting of the oscillator trimmer as this is adjusted at 1540 K.C. only and any adjustment at this point will affect both the tuning range of the receiver and the tracking of its circuits.

   NOTE: In order to accurately set the "ANT." trimmer of the condenser gang at 1400 K.C. it will be necessary to make a preliminary adjustment of the "antenna compensating condenser" (Illustration #21 on Fig. 3) before installing the receiver on a car.

   (d) Set the test oscillator on 600 kilocycles.

   (e) Turn the condenser rotor plates until the 600 K.C. signal from the test oscilaltor is tuned in with maximum output.

   (f) Peak the "antenna compensating condenser," (Illustration #21 on Fig. 3) for maximum output, rocking the rotor plates of the condenser gang back and forth and adjusting the "antenna compensating condenser" alternately until no further improvement in output can be obtained. (This trimmer is not critical in its adjustment, however, it should be adjusted carefully using a very low test osc. output.)

   (g) Reset the test oscillator on 1400 kilocycles.

   (h) Turn the condenser rotor plates until the 1400 K.C. signal is tuned in with maximum output.

   (i) Readjust the trimmer for the "ANT." section of the gang condenser CAREFULLY for maximum output.

4. Adjusting Compensating Condenser to Car Antenna

   After the "ANT." trimmer of the gang condenser has been correctly set according to preceding information, it will require no further adjustment. It will be necessary, however, to reset the "antenna capacity compensating condenser" (Illus. #21 on Fig. 3) to the car antenna when installing the receiver in a car in order to compensate for the wide range of antenna capacities being used. This is done in the following manner:

   (a) Tune the receiver to a weak broadcast station between 570 to 640 K.C.

   (b) Peak the "antenna capacity compensating condenser" for maximum output, rocking the receiver dial and adjusting the compensating condenser alternately until no further improvement in output can be obtained.

   CAUTION: Do not touch the adjustment of the parallel trimmer for the "ANT." section of the gang condenser after the receiver is installed on a car.

MODEL 630 Delco
Schematic

UNITED MOTORS SERVICE

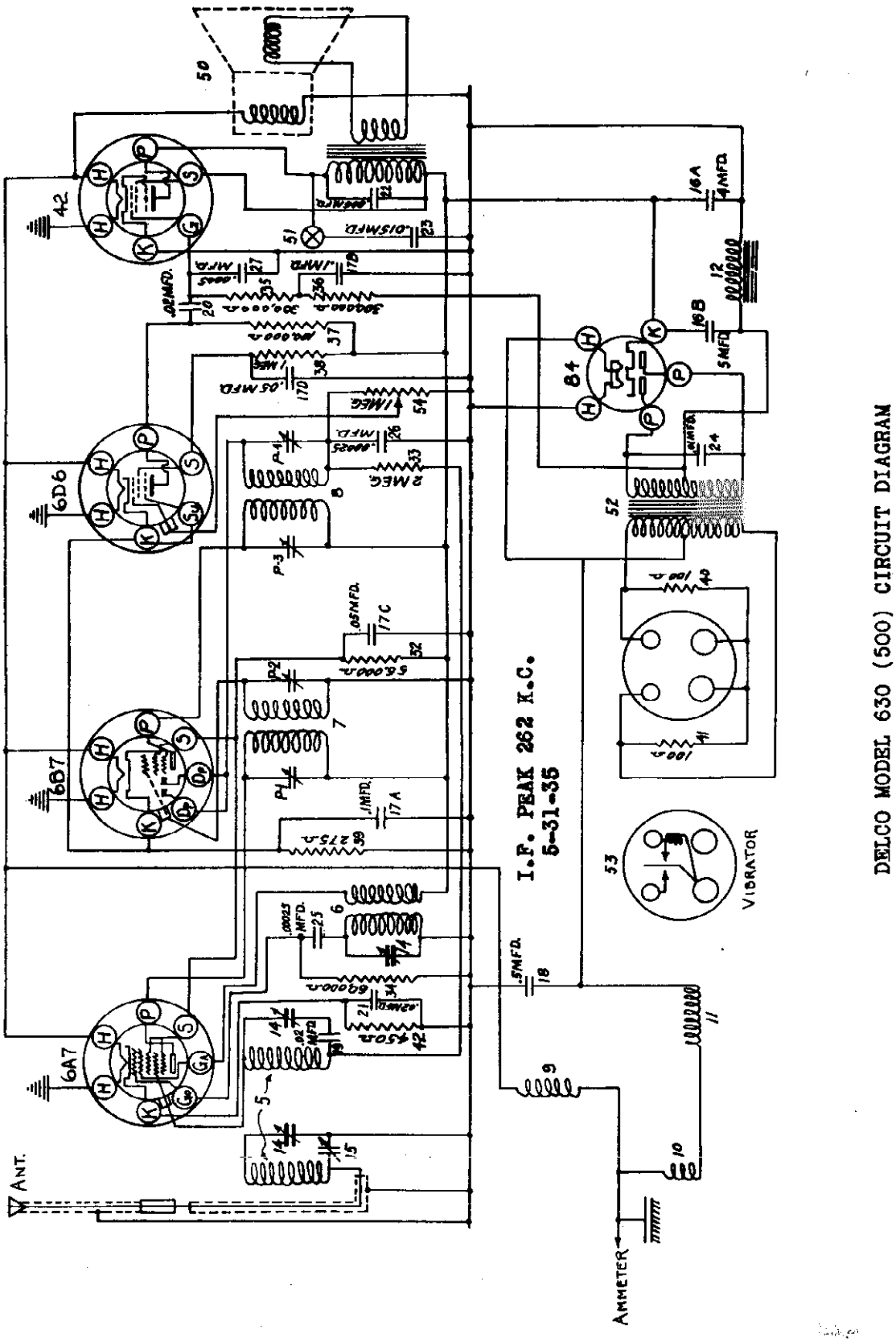

©John F. Rider, Publisher

©John F. Rider, Publisher

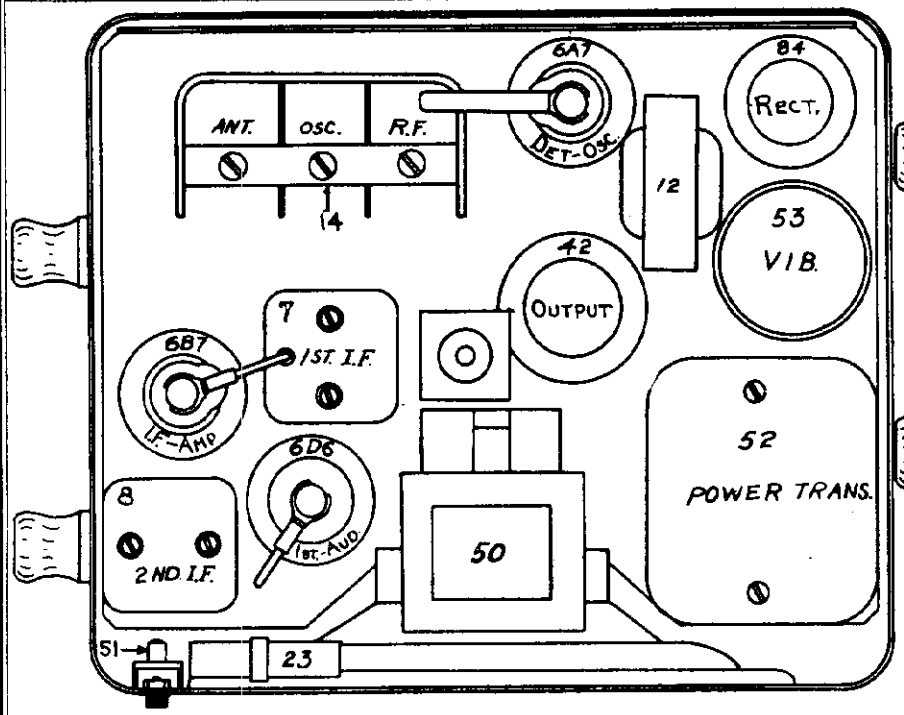

PARTS LAYOUT--Top View

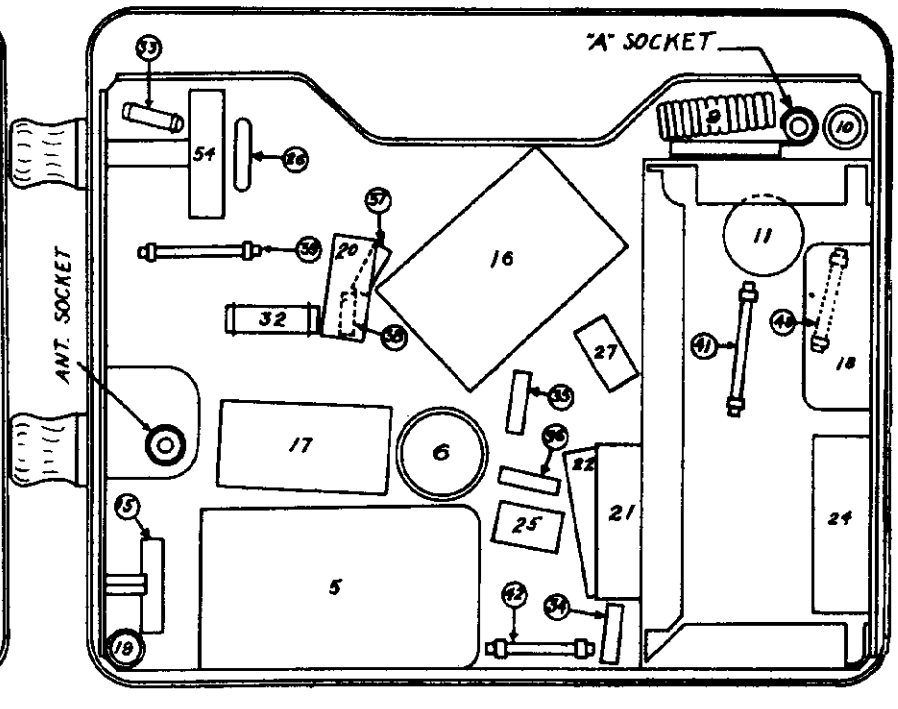

PARTS LAYOUT--Bottom View

VOLTAGE CHART

The voltages shown below are average readings taken from the tube socket contacts to the chassis frame, and may vary plus or minus 10% when the set is tested on a 6 volt battery. This is due to variations in characteristics of vibrators and tubes. All readings taken with a 1000 ohm per volt meter.

*TUBE BASE DIAGRAM SYMBOLS

Type	Function	H	P	Gs	Ga	Go	Su	K
6A7	Det.-Osc.	6	230	100	230	0	-	6.0
6B7	I.F. Amp.	6	230	100	-	-	-	3.0
6D6	1st Audio	6	55	20	-	-	-	3.0
42	Output	6	230	230	-	-	0	0
84	Rectifier	6	230	-	-	-	-	2.45

NOTE: Ampere drain of set at 6 volts is 7 amperes. Milliampere drain from B supply is 45 M.A.

MODEL 630 Delco
Alignment

UNITED MOTORS SERVICE

4. Adjusting Compensating Condenser to Car Antenna---Cont'd.

according to the preceding information, it will require no further adjustment. It will be necessary, however, to reset the 'antenna capacity compensating condenser' (Bottom View of chassis) to the car antenna when installing the receiver in a car in order to compensate for the wide range of antenna capacities being used. This is done in the following manner:

(a) Tune the receiver to a weak broadcast station between 570 to 640 K.C.

(b) Peak the compensating condenser for maximum output, rocking the receiver dial and adjusting the compensating condenser alternately until no further improvement in output can be obtained.

CAUTION: Do not touch the adjustment of the parallel trimmer for the "ANT" section of the gang condenser after the receiver is installed on a car.

PEAKING PROCEDURE

The only way the circuits of this receiver can be peaked properly is with the use of a calibrated test oscillator and an output meter. The circuits are very carefully adjusted at the factory and do not need any further adjustment unless tampered with in the field or a defective coil has been replaced. It is, therefore, advisable not to attempt any adjustments unless it is definitely known that an adjustment is necessary. This is especially important in connection with the "Syncro-Tuning" circuit.

Connecting Output Meter

Connect one of the output meter leads to the plate prong of the type 42 output tube. (The plate prong is the first prong to the left of the filament when looking at the bottom of the tube with the filament prongs toward you.) Connect the other lead to the receiver chassis, making sure that the output meter is protected with a D.C. blocking condenser connected in series to prevent damage to the meter.

IMPORTANT

Due to the high sensitivity of these receivers, the receiver chassis must be in its case before making any adjustments. This is necessary in order to obtain accurate adjustments and to prevent oscillation due to lack of the shielding effect of the receiver case. Also, DO NOT DISTURB the placement of the capacity wire located on top of the gang condenser. This wire should lay flat across the top of the condenser gang, extending from the "OSC." section to the "R.F." section.

1. Peaking I.F. Stages at 262 K.C.

(a) Connect the ground lead of the test oscillator to the chassis frame. Connect a .5 mfd. condenser in series with the other lead and connect this lead to the grid cap of the 6B7 tube, leaving the tube's grid clip in place. (The .5 mfd. condenser is necessary to prevent the oscillator circuit of the receiver from affecting the I.F. adjustments.)

(b) Set the test oscillator on 262 kilocycles.

(c) Turn the volume control of the receiver on full.

(d) Peak each of the I.F. trimmers on the 2nd I.F. coil, Illus. #6 on Fig. 3.

(e) Remove the test oscillator lead from the grid clip of the 6B7 tube and connect it to the grid clip of the 6A7 tube, leaving the tube's grid clip in place.

(f) Then peak each of the trimmers on the 1st I.F. coil, Illus. #7, Fig. 3.

(g) In order to insure accurate settings of the I.F. trimmers the above adjustments should be repeated using the lowest oscillator output that will give a reasonable output meter scale deflection. Make all adjustments for maximum output.

2. Peaking Oscillator Section of Gang Condenser at 1540 K.C.

(a) Connect the output of the test oscillator to the antenna connection of the receiver and to the chassis ground. (Do not use the .5 mfd. condenser that was required in aligning the I.F. stages.)

(b) Turn the rotor plates of the gang condenser until they are COMPLETELY OUT OF MESH.

(c) Set the test oscillator on exactly 1540 kilocycles.

(d) Adjust the parallel trimmer for the "OSC." section (middle section) CAREFULLY for maximum output. Then adjust the trimmers for the other two sections of the gang condenser also for maximum output.

Tracking "Syncro-Tuning" Circuit

(a) Set the test oscillator on 1400 kilocycles. (Leave test oscillator connected to ant. and gnd. of receiver.)

(b) Turn the condenser rotor plates until the 1400 K.C. signal from the test oscillator is tuned in with maximum output.

(c) Readjust the parallel trimmers for the "ANT." and "R.F." sections of the gang condenser (shown on Fig. 2) for maximum output. DO NOT DISTURB the setting of the oscillator trimmer as this is adjusted at the 1540 K.C. only and adjustment at this point will affect both the tuning range of the receiver and the tracking of its circuits.

NOTE: In order to accurately set the "ANT." trimmer of the condenser gang at 1400 K.C. it will be necessary to make a preliminary adjustment of the "antenna compensating condenser" (Illus. #15 on Fig. 3) before installing the receiver on a car.

(d) Then set the test oscillator on 600 kilocycles.

(e) Turn the condenser rotor plates until the 600 K.C. signal from the test oscillator is tuned in with maximum output.

(f) Peak the antenna compensating condenser (Illus. #15 on Fig. 3) for maximum output. Re-tune the gang condenser for maximum output. Repeat this operation alternately until no further improvement in output can be obtained.

(g) Reset the test oscillator on 1400 kilocycles.

(h) Turn the condenser rotor plates until the 1400 K.C. signal is tuned in with maximum output.

(i) Adjust the trimmer for the "ANT." section of the gang condenser CAREFULLY for maximum output.

4. Adjusting Compensating Condenser to Car Antenna

After the "ANT." trimmer of the gang condenser has been correctly set

©John F. Rider, Publisher

UNITED MOTORS SERVICE

MODEL 1105 Delco
Schematic

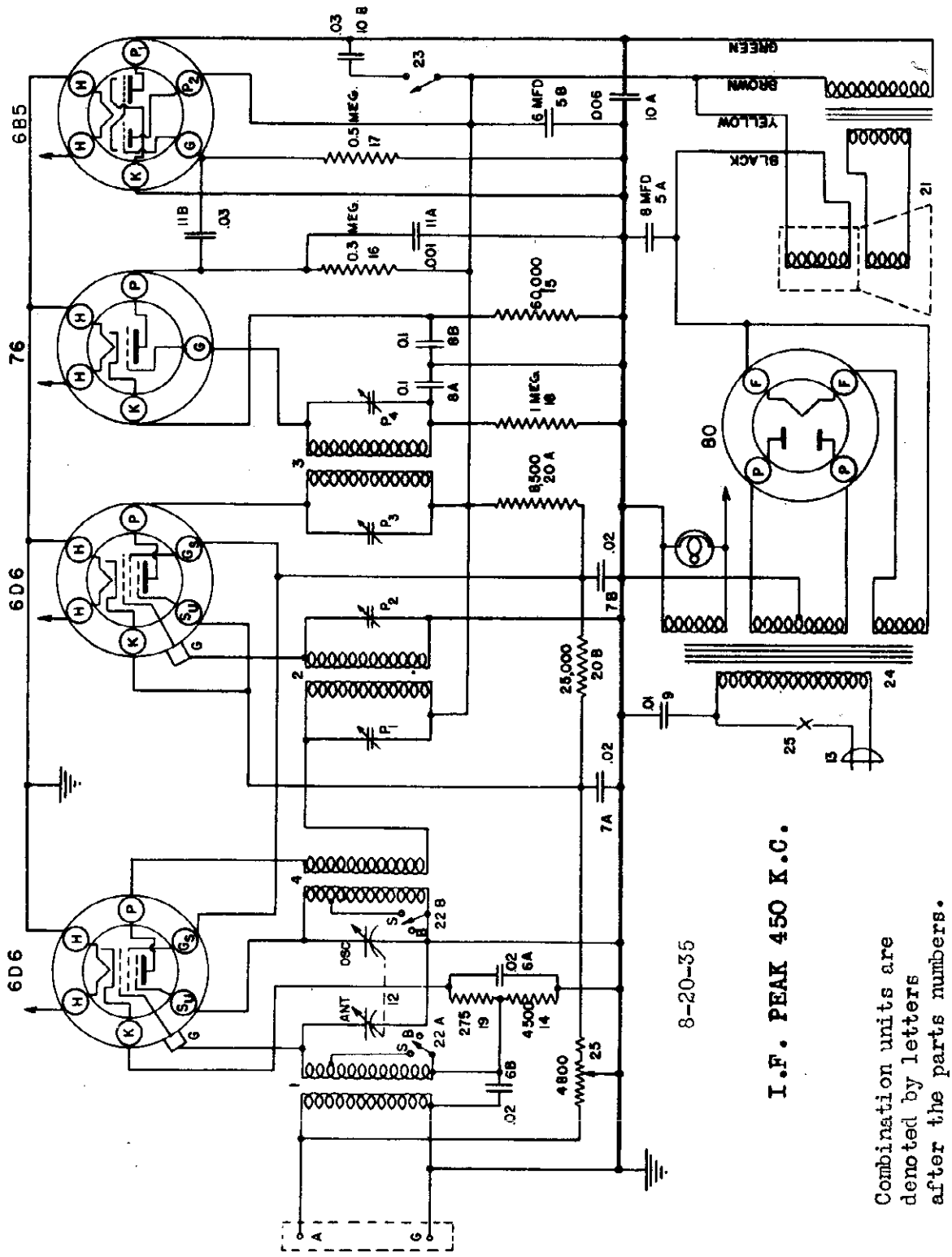

©John F. Rider, Publisher

MODEL 1105 Delco
Socket,Trimmers
Chassis,Voltage

UNITED MOTORS SERVICE

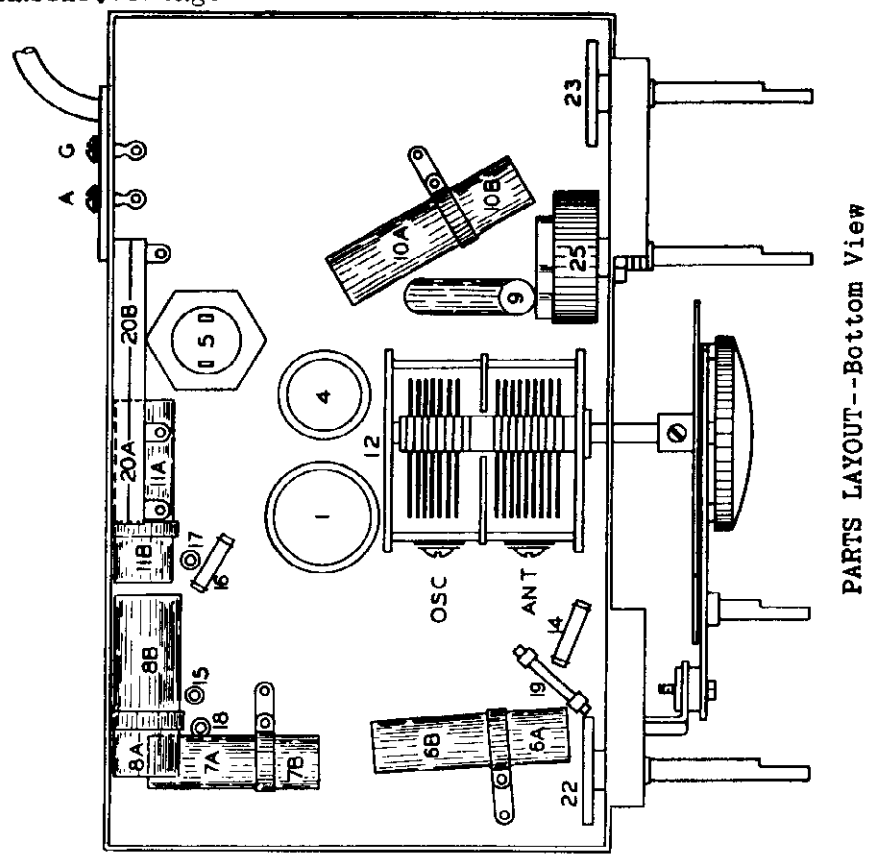

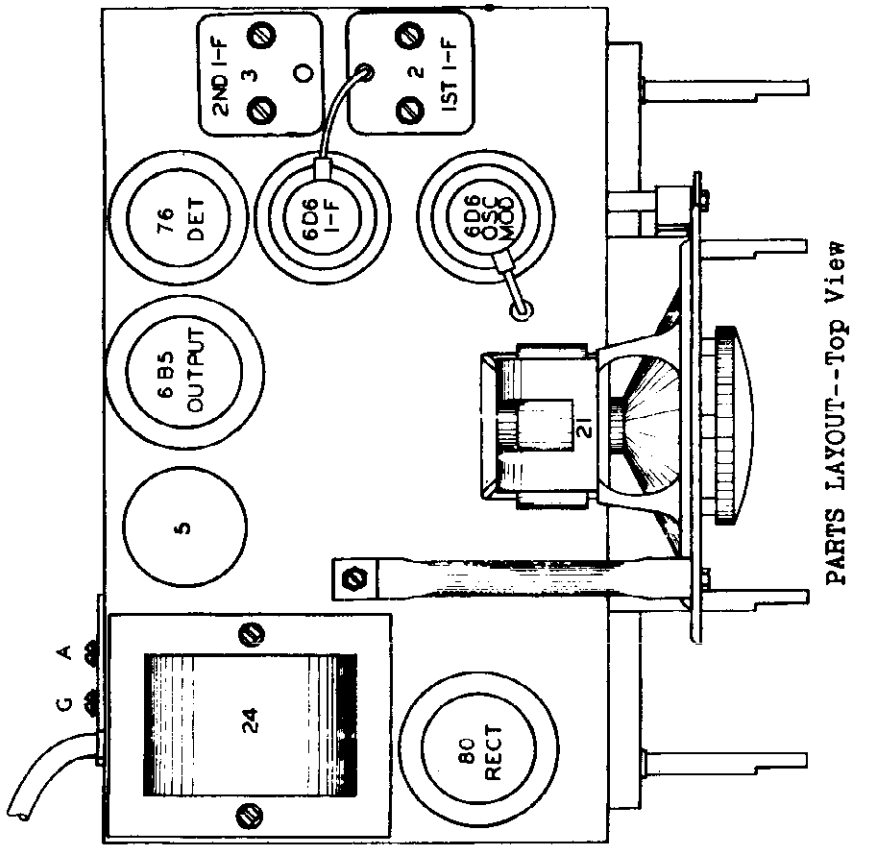

TUBE SOCKET VOLTAGES

Type	Function	H	P	Gs	Su	G	P2	K
6D6	Osc.-Mod.	6.3	210	120	0	28	-	31
6D6	I-F Amp.	6.3	210	120	3	0	-	3
76	Detector	6.3	86	-	-	0	-	8.5
6B5	Output	6.3	200	-	-	0	210	0
80	Rectifier	4.9	280	-	-	-	-	-

All readings (except filaments) taken on 115 volt line with 1000 ohms per volt meter from tube socket contacts to chassis using the 250 volt scale. Filament readings were taken with a low range A-C voltmeter.

©John F. Rider, Publisher

MODEL 1105 Delco
Alignment

UNITED MOTORS SERVICE

GENERAL: The Delco Model 1105 is a five tube, two band, A.C., receiver. The tubes used are: 6D6 Oscillator-Modulator, 6D6 I-F Amplifier, 76 Detector, 6B5 Output and type 80 Rectifier.

The frequency range is from 540 to 1570 kilocycles on the Broadcast Band and from 1570 to 4000 kilocycles on the short wave band (Police and Amateur).

CIRCUIT ALIGNMENT

All of the adjustable condensers are very accurately adjusted at the factory and should need no further adjustment unless tampered with in the field or a defective coil has been replaced. If realignment is found necessary the circuits can be properly adjusted only with the use of a calibrated test oscillator and an output meter.

1. Peaking I-F Stages at 450 Kilocycles

   (a) Connect the output of the test oscillator through a .02 mfd. series condenser to the top cap of the 6D6 Osc.-Mod. tube. DO NOT REMOVE THE GRID CLIP.

   (b) Connect the ground lead of the test oscillator to the chassis frame or ground terminal of the receiver.

   (c) Set the test oscillator to 450 kilocycles.

   (d) Rotate the receiver tuning condenser until the rotor plates are completely out of mesh.

   (e) Turn the band selector switch to the right hand position. (Short Wave Band)

   (f) Turn the volume control of the receiver on full.

   (g) With the test oscillator set to the lowest usable output level adjust the I-F trimmer condensers located on top of the I-F coils, Fig. 2, for maximum output.

   NOTE: Make the adjustments very carefully, going over them several times to insure that the final setting is at resonant frequency. Also, an insulated screw driver should be used to insure accurate adjustments.

2. Aligning R-F Circuits

   (a) Turn the band selector switch to the left hand position. (Broadcast Band)

   (b) Leave the receiver tuning condenser rotor plates completely out of mesh.

   (c) Connect the output lead from the test oscillator through a .00025 mfd., series condenser to the antenna terminal of the receiver.

   (d) Set the test oscillator to exactly 1570 kilocycles.

   (e) Adjust the trimmer on the "Osc." section of the tuning condenser gang for maximum output. (Fig. 3)

   (f) Set the test oscillator to 1400 kilocycles.

   (g) Tune in the 1400 kilocycle signal with the station selector for maximum output.
   Note: Do not disturb the setting of the "Osc." trimmer as this is adjusted at 1570 kilocycles only and any further adjustment at this point would affect both the tuning range of the receiver and the tracking of its circuits.

   (h) Adjust the trimmer on the "Ant" section of the tuning condenser gang for maximum output.

NOTE: There are no adjustments on this receiver for the Police Band.

©John F. Rider, Publisher

MODEL 1106 Delco
Schematic

UNITED MOTORS SERVICE

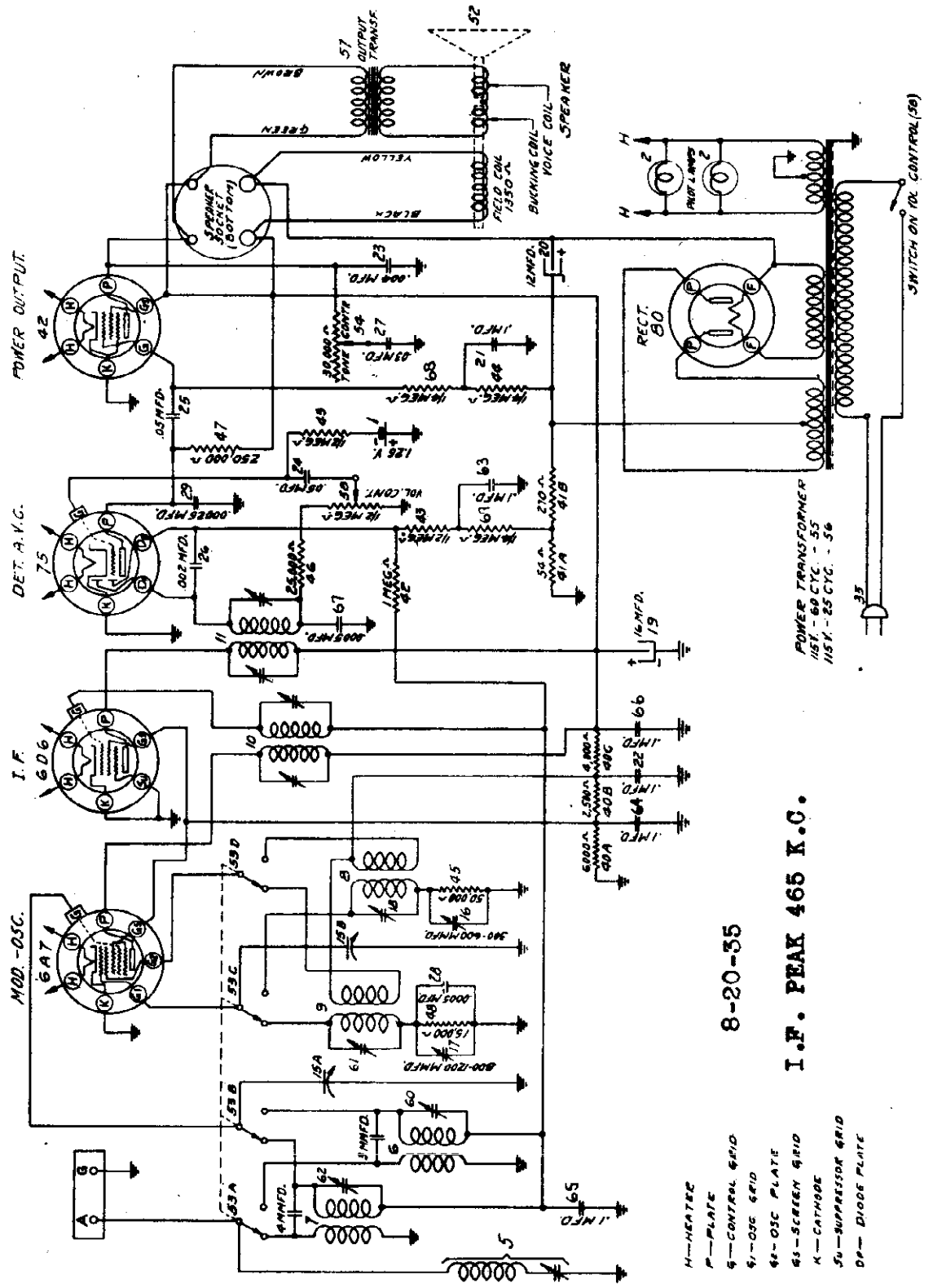

©John F. Rider, Publisher

UNITED MOTORS SERVICE

MODEL 1106 Delco
Socket, Trimmers
Chassis

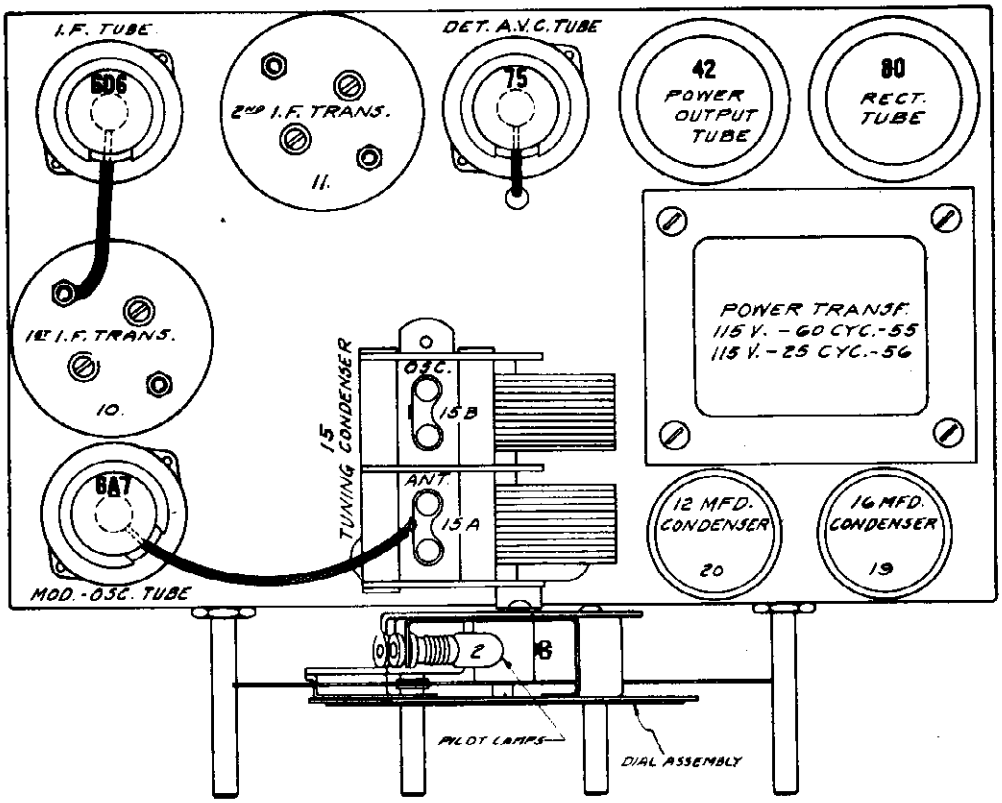

PARTS LAYOUT--Top View

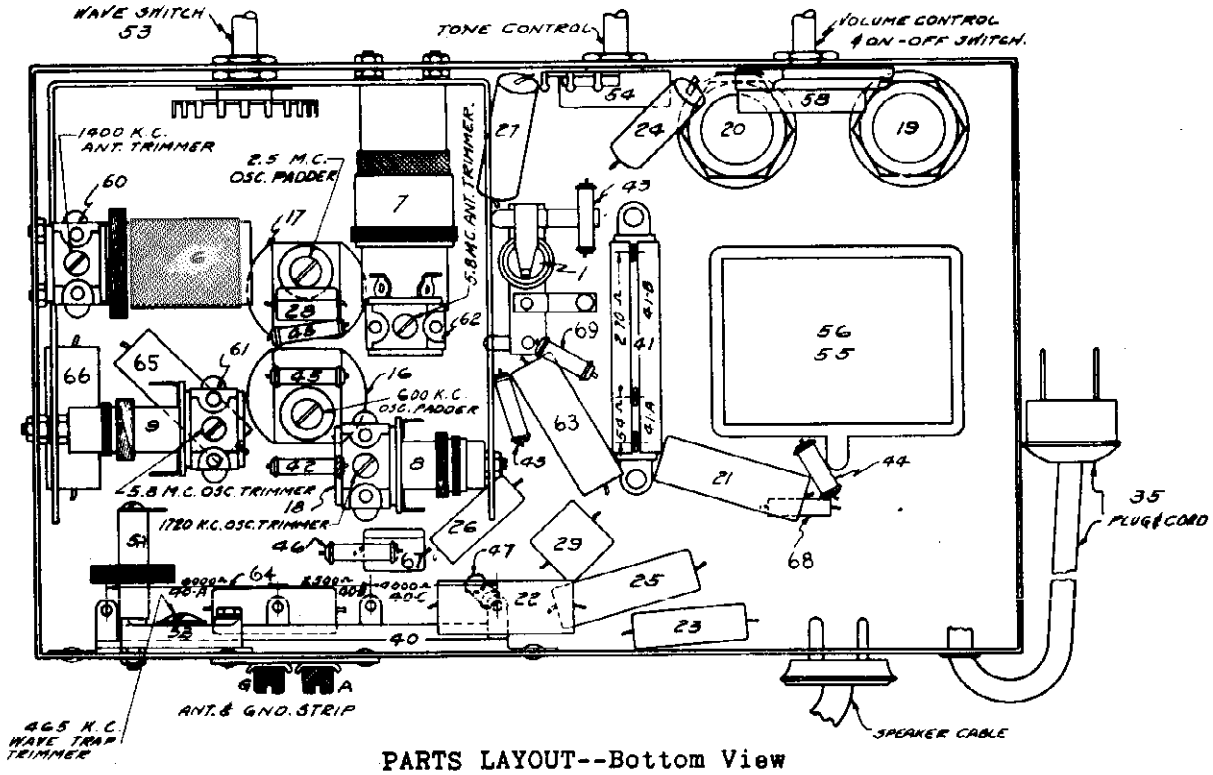

PARTS LAYOUT--Bottom View

©John F. Rider, Publisher

©John F. Rider, Publisher

GENERAL: The Delco Model 1106 is a 5 tube, 110 volt, 60 cycle operated, two band receiver with A.V.C. The type tubes used are: 6A7 Oscillator-Modulator, 6D6 I-F Amplifier, 75 Detector, A.V.C., and 1st Audio Amplifier, 42 Power Output and an 80 Rectifier.

The frequency range is from 540 to 1720 kilocycles on the Broadcast Band and from 2300 to 6200 kilocycles on the Short Wave Band.

CIRCUIT ALIGNMENT

All of the adjustable condensers are very accurately adjusted at the factory and should need no further adjustment unless tampered with in the field or a defective coil has been replaced. If realignment is found necessary, the circuits can be properly adjusted only with the use of a calibrated test oscillator or signal generator and an output meter.

1. Peaking I-F Stages at 465 Kilocycles

   (a) Connect the ground lead of the test oscillator to the chassis frame. Connect the other lead to the grid cap of the 6A7 tube through a .02 mfd. series condenser. DO NOT REMOVE THE GRID CLIP.

   (b) Set the test oscillator to exactly 465 kilocycles.

   (c) Turn the volume control of the receiver on full.

   (d) Peak each of the trimmers on the 2nd I-F coil., Illus. #11 on Fig. 2.

   (e) Peak each of the trimmers on the 1st I-F coil., Illus. #10 on Fig. 2.

   (f) In order to insure accurate settings of the I-F trimmers, the above adjustments should be repeated using the lowest test oscillator output that will give a reasonable output meter scale deflection.

2. Aligning R-F Circuits -- Broadcast Band (540-1720 K.C.)

   (a) Remove the test oscillator lead from the grid of the 6A7 tube and connect it to the receiver antenna terminal through a .00025 mfd. series condenser.

   (b) Check to see the tuning dial has not slipped on the condenser gang shaft by turning the rotor plates of the condenser gang until they are completely out of mesh, at which point the dial pointer should be at the high frequency end of the dial calibration.

   (c) Turn the band selector switch to the right for operation on the Broadcast Band (540-1720 K.C.)

   (d) Set the test oscillator frequency to exactly 1720 K.C.

   (e) Turn the gang condenser until the plates are completely out of mesh.

   (f) Adjust the broadcast padding condenser for the oscillator section of the condenser gang, shown as Illus. #18 on Fig. 3, to bring in the 1720 kilocycle signal from the test oscillator with maximum output.

   (g) Set the test oscillator frequency and the receiver dial to exactly 1400 kilocycles.

   (h) Adjust the broadcast padding condenser, Illus. #60 Fig. 3, for the antenna section of the condenser gang for maximum output.

   (i) Set test oscillator on 600 kilocycles.

2. Aligning R-F Circuits--Broadcast Band (540-1720 K.C.)--Cont'd.

   (j) Set receiver dial at approximately 600 kilocycles, leaving the test oscillator connected to the ANT and GND terminal of the receiver and the band change switch in the Broadcast position.

   (k) Adjust the oscillator tracking condenser Illus. #16 Fig. 3, rocking the tuning condenser gang back and forth until no further increase in output can be obtained.

3. Aligning R-F Circuits--Short Wave Band (2.3 to 6.2 meg.)

   (a) Leave test oscillator connected to ANT and GND of receiver and turn the band selector switch to the left for operation on the Short Wave Band.

   (b) Set test oscillator frequency and receiver dial to exactly 5.8 megacycles.

   (c) Adjust the short wave padding condenser, Illus. #61 Fig. 3, for the oscillator section of the condenser gang until the 5.8 megacycle signal from the test oscillator is tuned in with maximum output.

   (d) Adjust the short wave padding condenser, Illus. #62. Fig. 3 for maximum output.

   (e) Turn the receiver dial and set test oscillator to approximately 2.5 megacycles.

   (f) Adjust the Oscillator tracking condenser, Illus. #17 Fig. 3, rocking the tuning condenser gang back and forth until no further improvement in output can be obtained.

4. Adjustment of 465 K.C. Wave Trap

Some code and aircraft signals are broadcast on a frequency exactly the same or near the I.F. frequency of the receiver. To eliminate interference from these signals, a 465 K.C. antenna filter is incorporated in the set. To adjust:

(a) Leave test oscillator output leads connected to the set ANT and GND.

(b) Set the test oscillator frequency to exactly 465 K.C. and adjust the 465 K.C. wave trap trimmer, Illus. #5, Fig. 3 for MINIMUM 465 K.C. SIGNAL RESPONSE.

*TUBE SOCKET VOLTAGES

Tube	Function	H	P	Gs	Su	G1	G2	K
6A7	Osc.-Mod.	6.3	235	90	-	-	140	0
6D6	I-F Amp.	6.3	235	90	0	-	-	0
75	Det. A-F Amp.	6.3	100	-	-	-	-	0
42	Output	6.3	225	235	-	-	-	0
80	Rectifier	5.0	-	-	-	-	-	-

*Readings taken from tube socket contacts to ground (except heaters) with a meter having a resistance of a 1000 ohms per volt using a line voltage of 115 volts A.C.

CAUTION: Do not under any condition remove the speaker plug with the receiver power on as serious damage will result to the electrolytic condensers.

MODEL 1107 Delco
Schematic

UNITED MOTORS SERVICE

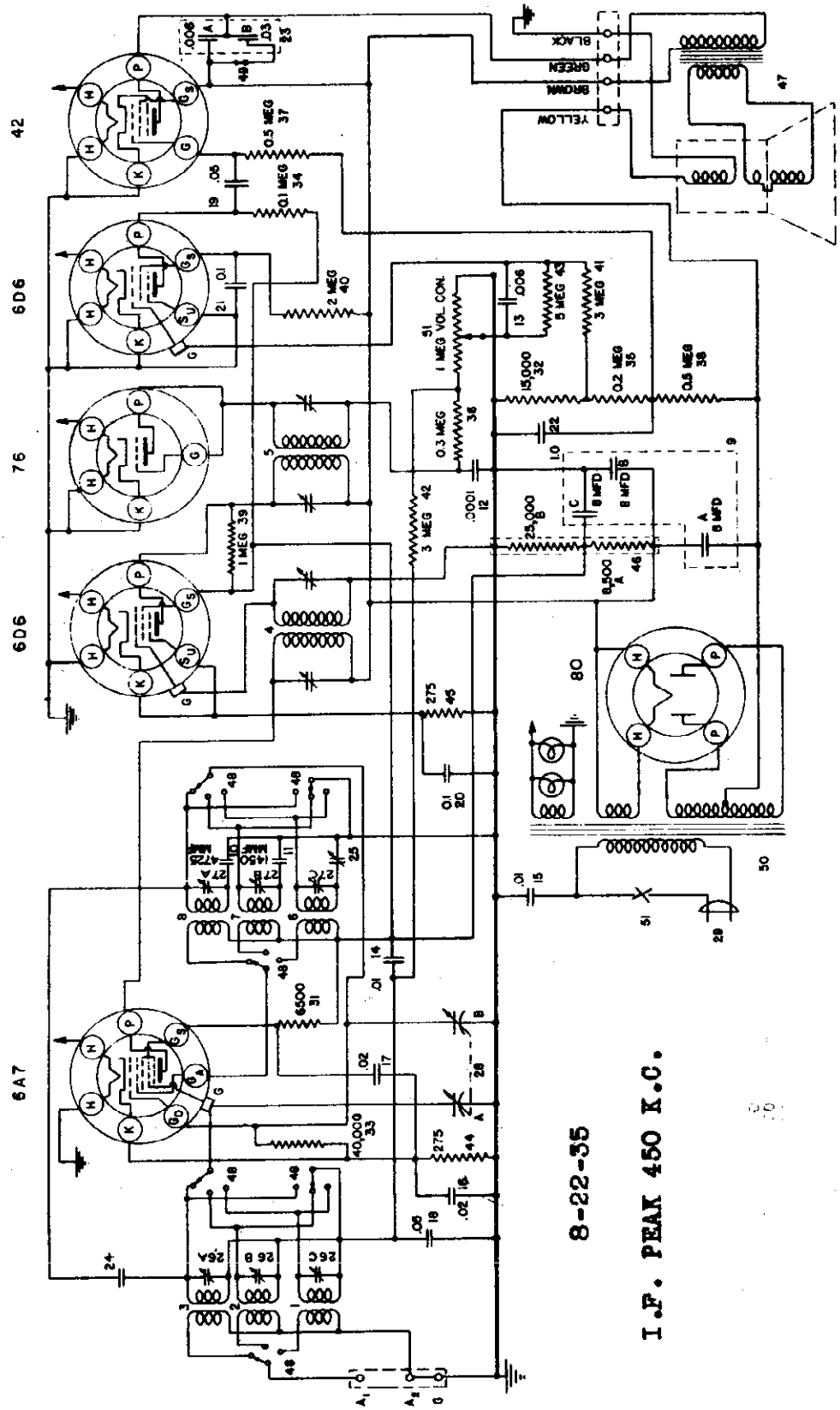

DELCO MODEL 1107 CIRCUIT DIAGRAM

©John F. Rider, Publisher

MODEL 1107 Delco
Voltage, Socket
Trimmers, Chassis

UNITED MOTORS SERVICE

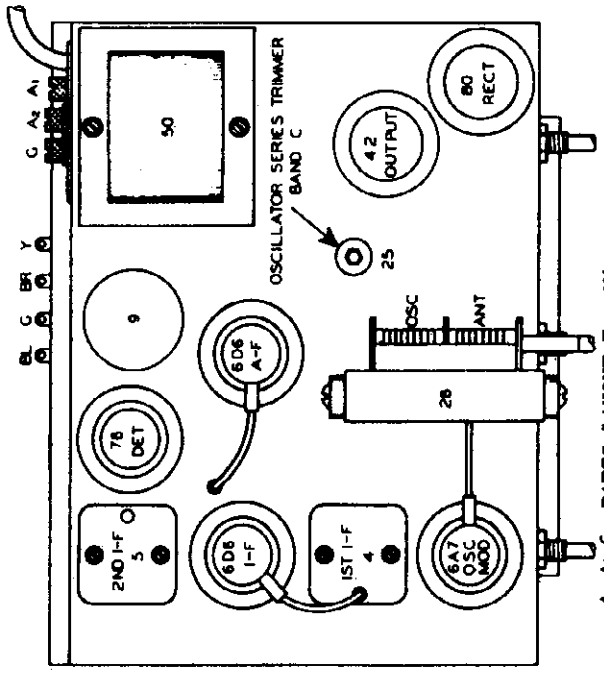

PARTS LAYOUT--Top View

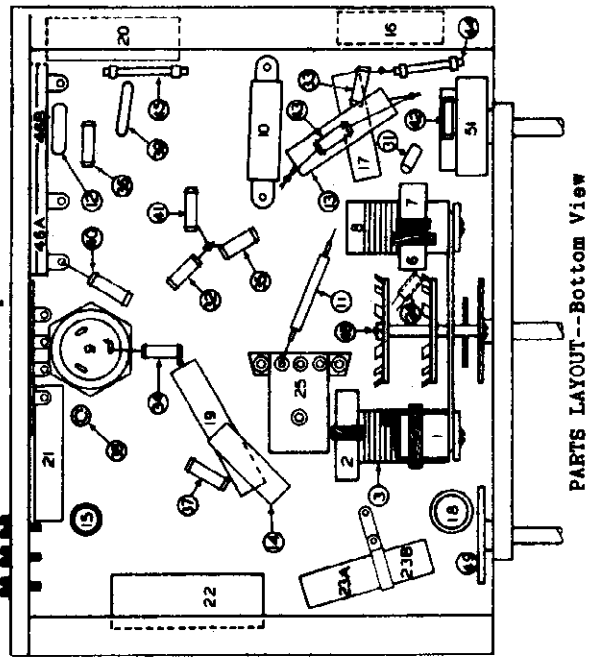

PARTS LAYOUT--Bottom View

*TUBE SOCKET VOLTAGES

Type	Function	H	P	Gs	Su	G	Go	Ga	K
6A7	Osc.-Mod.	6.3	220	80	3.3	0	-4-10	105	2.5
6D6	I-F Amp.	6.3	220	105	3.3	0	-	-	3.3
76	Diode	6.3	-	-	-	-	-	-	0
6D6	A-F Amp.	6.3	20	20	0	1.0	-	-	0
42	Output	6.3	210	220	-	8	-	-	0
80	Rectifier	4.9	220	-	-	-	-	-	-

*Readings taken from the tube socket contacts to ground (except heaters) with a meter having a resistance of 1000 ohms per volt using a 250 volt scale and a line voltage of 115 volts A.C.

NOTE: On the wave band switch Illus. #48 there is a small eyelet soldered to one of the switch connecting lugs. This eyelet, Illus. #24 is used as a small condenser the capacity of which is formed by inserting an insulated wire into the sleeve of the eyelet. In replacing any defective wave band switches, care should be taken to see that the "capacity wire" is inserted in the sleeve of the eyelet. This insulated wire should be passed through the eyelet and a slight hook made in the end to prevent it from pulling out.

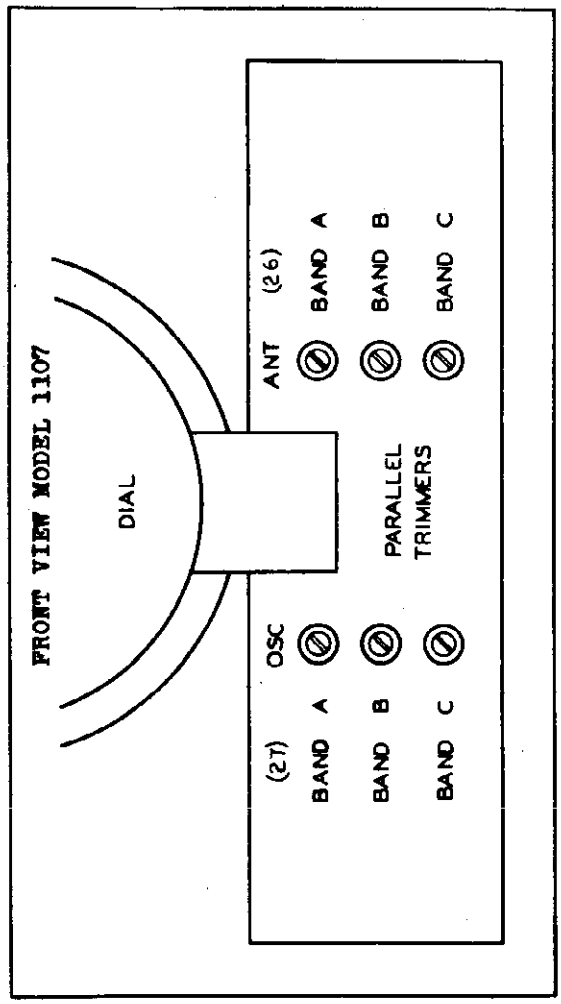

©John F. Rider, Publisher

GENERAL: The Delco Model 1107 is a 6 tube, 110 volt A.C., three band receiver with S. A.V.C. The tubes used are a 6A7 Oscillator-Modulator, 6D6 I-F Amplifier, 75 Detector and A.V.C., 6D6 A-F Amplifier, 42 Output and type 80 Rectifier.

The frequency ranges on bands covered are: American Broadcast Band (C) 540 to 1700 kilocycles, Police and Amateur Band (B) 1700 to 5000 kilocycles and the Foreign Short Wave Band (A) 5.4 to 15 megacycles.

ALIGNMENT PROCEDURE

1. Peaking I-F Stages at 450 Kilocycles

   (a) Connect the output of the test oscillator through a .02 mfd. condenser to the grid cap of the 6A7 tube, leaving the tube's grid clip in place. Connect the ground lead from the test oscillator to the receiver chassis.

   (b) Turn the tuning condenser rotor plates until they are completely meshed. (540 K.C. end)

   (c) Turn the band selector switch to Band A (extreme left hand position).

   (d) Set the test oscillator to 450 kilocycles.

   (e) Adjust both trimmers located on top of the 2nd. I-F coil for maximum output. (Illus. #5, Fig. 3)

   (f) Adjust both trimmers located on top of the 1st. I-F coil for maximum output. (Illus. #4, Fig. 3)

   (g) Using the lowest test oscillator output that will give a reasonable scale deflection on the output meter repeat operations (e) and (f) as many times as necessary to obtain the maximum output.

2. Peaking R-F Circuits--Band "C" (540 to 1700 K.C.)

   (a) Connect the output of the test oscillator through a .00025 mfd. condenser to the "Ant" terminal of the receiver.

   (b) Turn the tuning condenser rotor plates until they are COMPLETELY OUT OF MESH.

   (c) Turn the band selector switch to Band C (extreme right hand position).

   (d) Set the test oscillator to 1720 kilocycles.

   (e) Peak the Band "C" oscillator parallel trimmer shown on Fig. 1.

   (f) Set the test oscillator to 1400 kilocycles.

   (g) Tune-in the 1400 kilocycle signal with the station selector.

   (h) Peak the Band "C" antenna parallel trimmer shown on Fig. 1.

   (i) Using the lowest test oscillator output that will give a reasonable output meter reading, repeat operations (g) and (h) until no further increase in output can be obtained.

   (j) Set the test oscillator to 600 kilocycles.

   (k) Tune-in the 600 kilocycle signal with the station selector in the region of 60 on the dial, for maximum reading on the output meter.

   (l) Adjust the oscillator series trimmer, (Illus. #25, Fig. 4) while rocking the condenser gang plates back and forth slightly, until no further increase in output can be obtained.

   (m) Repeat operations (g) and (h) for more accurate adjustments.

3. Peaking R-F Circuits--Band "B" (1700 to 5000 K.C.)

   (a) Turn the band selector switch to Band "B" (Middle position).

   (b) Set the test oscillator to 5000 kilocycles. (5.0 megacycles)

   (c) Turn the station selector to 5 on Band "B".

   (d) Peak the Band "B" oscillator parallel trimmer shown on Fig. 1.

   (e) Peak the Band "B" antenna parallel trimmer (Fig. 1).

4. Peaking R-F Circuits--Band "A" (5.4 to 15 Meg.)

   (a) Replace the .00025 mfd. condenser which is being used in series with the output lead of the test oscillator with a 400 ohm carbon resistor.

   (b) Turn the band selector switch to Band "A".

   (c) Set the test oscillator to 15 megacycles.

   (d) Close the Band "A" Oscillator parallel trimmer (Fig. 1) and then open three turns.

   (e) Close the Band "A" Antenna parallel trimmer (Fig. 1) and then open 1/2 turn.

   (f) Turn the station selector to 15 on the dial (Band "A").

   (g) Peak the Band "A" oscillator parallel trimmer (Fig. 1) on the FIRST test oscillator signal heard when closing the condenser. In making this adjustment care should be taken not to use too much output from the test oscillator to avoid setting the oscillator circuit on the wrong frequency.

   NOTE: Check on the adjustment of the Band "A" oscillator parallel trimmer as follows:

   1. Increase the test oscillator output not more than ten times.
   2. Try to tune-in the 15 megacycle test oscillator signal with the station selector at approximately 14 on the dial.
   3. If the 15 megacycle signal can be heard at approximately 14 and 15 both on the dial the oscillator parallel trimmer has been aligned on the correct frequency. It should be noted, however, that the signal tuned in at 15 on the dial should be much stronger than the signal heard at 14. If this condition is not found it will be necessary to repeat the operation (g).

   (h) Reduce the output of the test oscillator to the previous output and retune the station selector to 15 megacycles at 15 on the dial.

   (i) Peak the Band "A" antenna parallel trimmer (Fig. 1) for maximum output, then re-tune the station selector for maximum output.

   (j) Repeat the two operations in (i) as many times as necessary to obtain the maximum output.

©John F. Rider, Publisher

MODEL 1108 Delco
Glass Tubes
Schematic, Voltage

UNITED MOTORS SERVICE

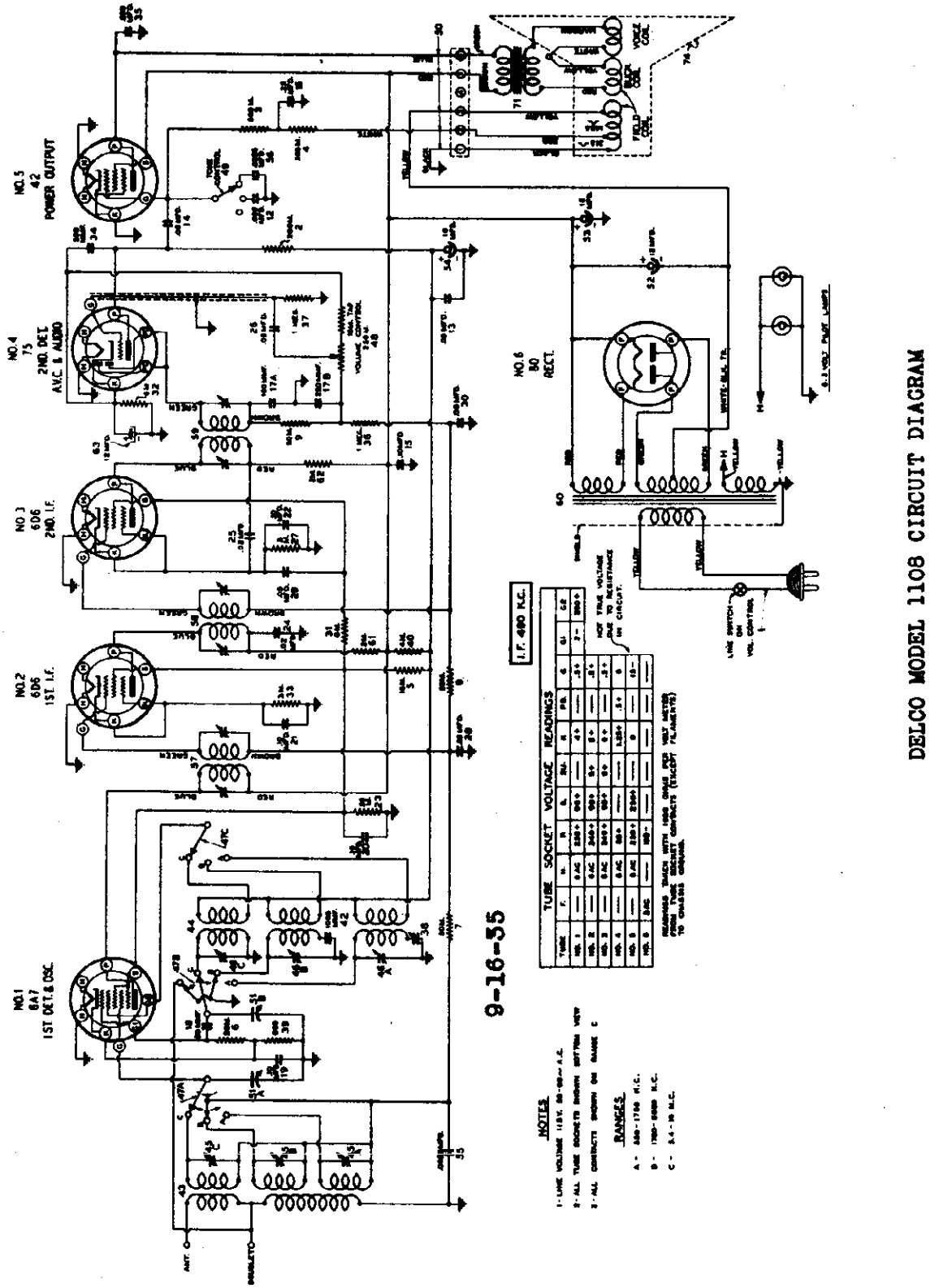

©John F. Rider, Publisher

MODEL 1108 Delco
Glass Tubes
Socket, Trimmers
Chassis

UNITED MOTORS SERVICE

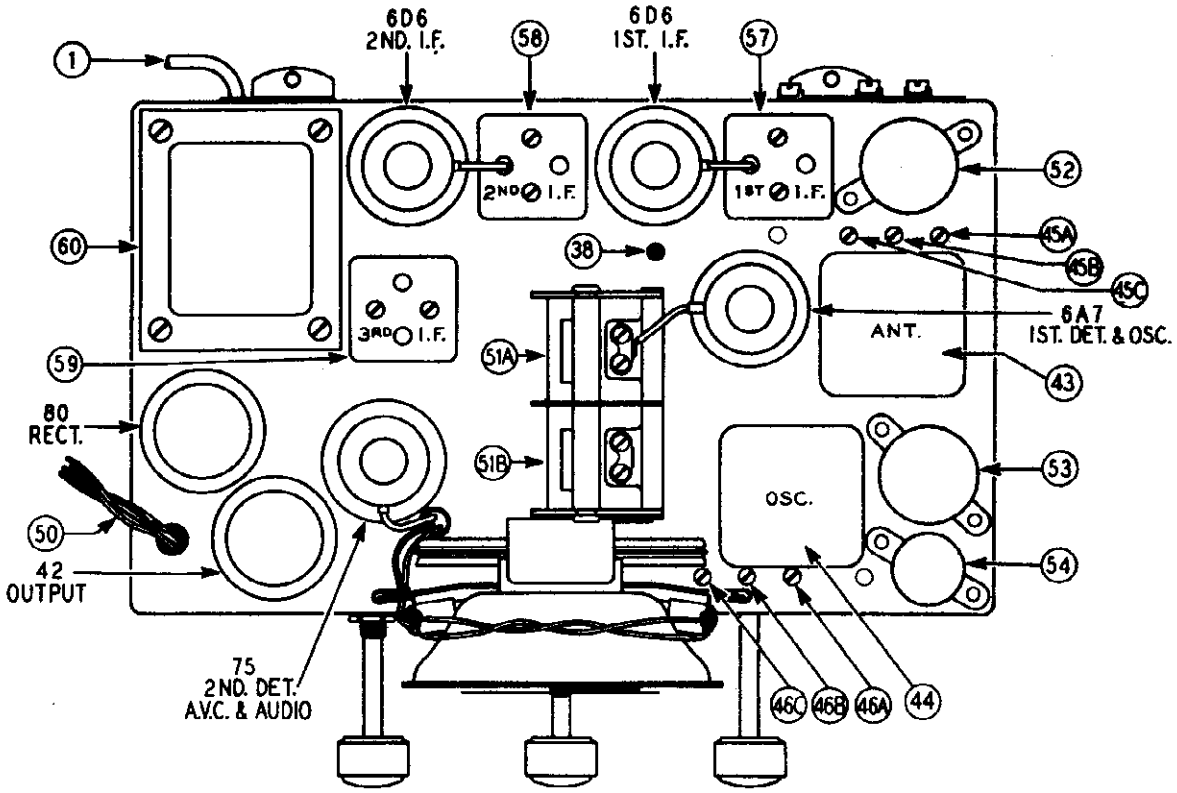

PARTS LAYOUT--Top View

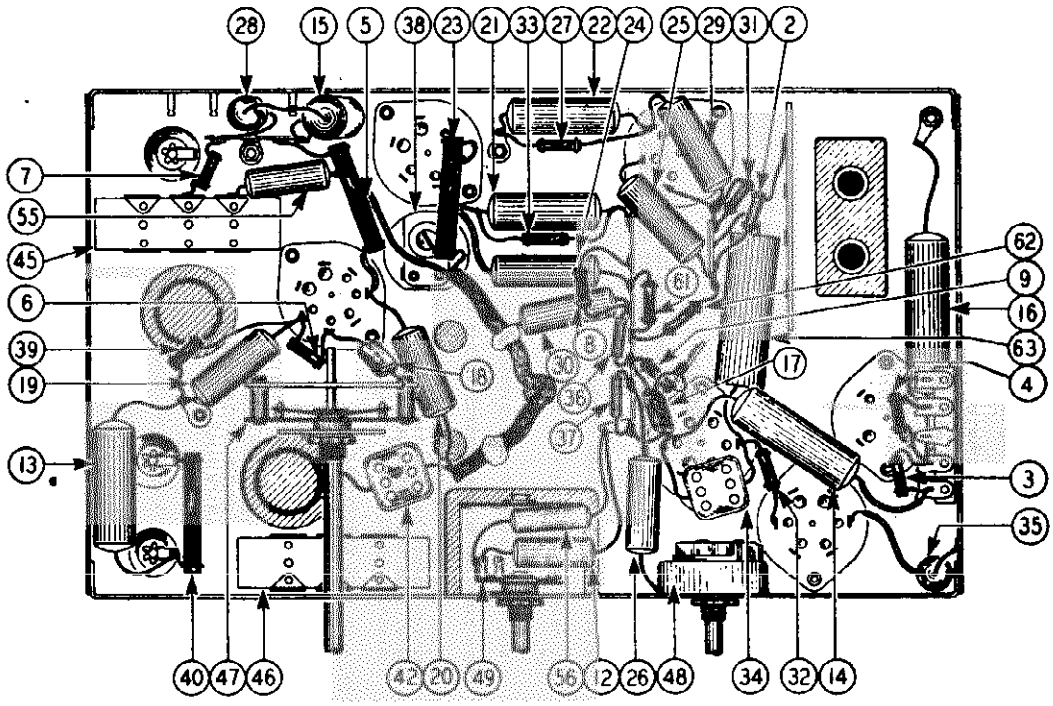

PARTS LAYOUT--Bottom View

©John F. Rider, Publisher

GENERAL: The Delco Models 1108 is a six tube, 115 volt, 50-60 cycles A.C., three band receiver with A.V.C., Tone Control and a "Band Spread" dial. The tubes used are 6A7 Detector-Oscillator, 6D6 1st I-F Amplifier, 6D6 2nd I-F Amplifier, 75 Detector, A.V.C. and 1st Audio amplifier, 42 Power Output and an 80 Rectifier tube.

The frequency ranges on bands covered are: American Broadcast Band (A) 550 to 1750 kilocycles, Police and Amateur Band (B) 1700 to 5580 kilocycles and the Foreign Short Wave Band (C) 5.4 to 18 megacycles.

CIRCUIT ALIGNMENT

All of the adjustable condensers are very accurately adjusted at the factory and should need no further adjustment unless tampered with in the field or a defective coil has been replaced. If realignment is found necessary the circuits can be properly adjusted only with the use of a calibrated test oscillator and an output meter.

The receiver should be aligned in a location free from local interference (interference caused by motors, flashers, automobile ignition, etc.) as high frequency disturbances will cause difficulties when adjusting the short wave circuits.

1. Peaking I-F Stages at 490 Kilocycles

   (a) Connect the signal lead of the test oscillator to the grid cap of the 6A7 tube through a .25 mfd. condenser. DO NOT REMOVE THE GRID CLIP FROM THE TUBE.

   (b) Connect the ground lead of the test oscillator to the receiver chassis.

   (c) Set receiver dial pointer to 1400 K.C. and band change switch on position "A".

   (d) Place test oscillator in operation at 490 K.C.

   (e) Turn receiver volume control to the maximum position.

   (f) Adjust the six I-F trimmers located on top of the I-F coils, (Fig. 2) until maximum output is obtained. During alignment, maintain as low a value of signal from the test oscillator as is consistant with obtaining a readable indication on the output meter.

   Aligning at 1400 Kilocycles

   (a) Connect the signal lead of the test oscillator to the antenna binding post through a .00025 mfd. condenser. (Leave test oscillator ground lead connected to the chassis ground.)

   (b) Turn dial knob until condensers are fully MESHED. The dial pointer (hour hand) should be on the horizontal line of the dial, pointing to 9 and 3 o'clock. The minute hand should be at 12 o'clock or in the vertical position.

   (c) Set test oscillator to 1400 K.C.

   (d) Turn dial pointer 1400 K.C. and leave band change switch on position "A" (extreme left hand position).

   (e) Adjust the Band "A" oscillator parallel trimmer, Illus. 46A (Fig. 2) to maximum output.

   (f) Adjust the Band "A" R-F parallel trimmer, Illus. 45A (Fig. 2) to maximum output.

3. Aligning at 600 K.C.

   (a) Set the test oscillator to 600 Kilocycles.

   (b) Tune in the 600 K.C. signal with the receiver dial in the region of 600 K.C. for maximum output. (This point does not have to be exactly at the 600 K.C. dial setting.)

   (c) Adjust the Band "A" oscillator tracking condenser, Illus. #38 (Fig. 2) while rocking the tuning condenser back and forth through resonance until no further increase in output can be obtained.

   (d) Repeat operations (c), (d), (e) and (f) under "Aligning at 1400 K.C." for accurate adjustments.

4. Aligning at 5 Megacycles (5000 K.C.)

   (a) Turn band change switch to Band "B" (middle position)

   (b) Set the test oscillator to 5 megacycles.

   (c) Turn receiver dial pointer to 5 megacycles.

   (d) Adjust the Band "B" oscillator parallel trimmer Illus. #46B (Fig.2) to maximum output.

   (e) Adjust the Band "B" R-F parallel trimmer, Illus. #45B (Fig. 2) to maximum output.

   (f) Check dial setting at 1800 K.C.

5. Aligning at 18 Megacycles (18,000 K.C.)

   (a) Replace the .00025 mfd. series condenser in the signal lead from the test oscillator with a 400 ohm carbon resistor.

   (b) Turn the band change switch to Band "C" (extreme right hand position).

   (c) Turn receiver dial pointer to 18 megacycles.

   (d) Set the test oscillator to 18 megacycles.

   (e) Adjust the Band "C" oscillator parallel trimmer, Illus. #46C (Fig. 2) to maximum output.

   NOTE: On the 18 Megacycle Alignment of trimmer Illus. #46C, it will be noted that there are two settings at which the signal will be received. Use the signal received with oscillator parallel trimmer setting having the most capacity or the point at which the trimmer screw is farthest in.

   (f) Adjust the Band "D" R-F parallel trimmer, Illus. 45C (Fig. 2) to maximum output.

©John F. Rider, Publisher

GENERAL: The Delco Models 1108 is a six tube, 115 volt, 50-60 cycles A.C., three band receiver with A.V.C., Tone Control and a "Band Spread" dial. The tubes used are 6A7 Detector-Oscillator, 6D6 1st I-F Amplifier, 6D6 2nd I-F Amplifier, 75 Detector, A.V.C. and 1st Audio amplifier, 42 Power Output and an 80 Rectifier tube.

The frequency ranges on bands covered are: American Broadcast Band (A) 550 to 1750 kilocycles, Police and Amateur Band (B) 1700 to 5680 kilocycles and the Foreign Short Wave Band (C) 5.4 to 18 megacycles.

CIRCUIT ALIGNMENT

All of the adjustable condensers are very accurately adjusted at the factory and should need no further adjustment unless tampered with in the field or a defective coil has been replaced. If realignment is found necessary the circuits can be properly adjusted only with the use of a calibrated test oscillator and an output meter.

The receiver should be aligned in a location free from local interference (interference caused by motors, flashers, automobile ignition, etc.) as high frequency disturbances will cause difficulties when adjusting the short wave circuits.

1. Peaking I-F Stages at 490 Kilocycles

   (a) Connect the signal lead of the test oscillator to the grid cap of the 6A7 tube through a .25 mfd. condenser. DO NOT REMOVE THE GRID CLIP FROM THE TUBE.

   (b) Connect the ground lead of the test oscillator to the receiver chassis.

   (c) Set receiver dial pointer to 1400 K.C. and band change switch on position "A".

   (d) Place test oscillator in operation at 490 K.C.

   (e) Turn receiver volume control to the maximum position.

   (f) Adjust the six I-F trimmers located on top of the I-F coils, (Fig. 2) until maximum output is obtained. During alignment, maintain as low a value of signal from the test oscillator as is consistant with obtaining a readable indication on the output meter.

   Aligning at 1400 Kilocycles

   (a) Connect the signal lead of the test oscillator to the antenna binding post through a .00025 mfd. condenser. (Leave test oscillator ground lead connected to the chassis ground.)

   (b) Turn dial knob until condensers are fully MESHED. The dial pointer (hour hand) should be on the horizontal line of the dial, pointing to 9 and 3 o'clock. The minute hand should be at 12 o'clock or in the vertical position.

   (c) Set test oscillator to 1400 K.C.

   (d) Turn dial pointer 1400 K.C. and leave band change switch on position "A" (extreme left hand position).

   (e) Adjust the Band "A" oscillator parallel trimmer, Illus. 46A (Fig. 2) to maximum output.

   (f) Adjust the Band "A" R-F parallel trimmer, Illus. 45A (Fig. 2) to maximum output.

3. Aligning at 600 K.C.

   (a) Set the test oscillator to 600 Kilocycles.

   (b) Tune in the 600 K.C. signal with the receiver dial in the region of 600 K.C. for maximum output. (This point does not have to be exactly at the 600 K.C. dial setting.)

   (c) Adjust the Band "A" oscillator tracking condenser, Illus. #38 (Fig. 2) while rocking the tuning condenser back and forth through resonance until no further increase in output can be obtained.

   (d) Repeat operations (c), (d), (e) and (f) under "Aligning at 1400 K.C." for accurate adjustments.

4. Aligning at 5 Megacycles (5000 K.C.)

   (a) Turn band change switch to Band "B" (middle position)

   (b) Set the test oscillator to 5 megacycles.

   (c) Turn receiver dial pointer to 5 megacycles.

   (d) Adjust the Band "B" oscillator parallel trimmer Illus. #46B (Fig.2) to maximum output.

   (e) Adjust the Band "B" R-F parallel trimmer, Illus. #45B (Fig. 2) to maximum output.

   (f) Check dial setting at 1800 K.C.

5. Aligning at 18 Megacycles (18,000 K.C.)

   (a) Replace the .00025 mfd. series condenser in the signal lead from the test oscillator with a 400 ohm carbon resistor.

   (b) Turn the band change switch to Band "C" (extreme right hand position).

   (c) Turn receiver dial pointer to 18 megacycles.

   (d) Set the test oscillator to 18 megacycles.

   (e) Adjust the Band "C" oscillator parallel trimmer, Illus. #46C (Fig. 2) to maximum output.

NOTE: On the 18 Megacycle Alignment of trimmer Illus. #46C, it will be noted that there are two settings at which the signal will be received. Use the signal received with oscillator parallel trimmer setting having the most capacity or the point at which the trimmer screw is farthest in.

   (f) Adjust the Band "D" R-F parallel trimmer, Illus. 45C (Fig. 2) to maximum output.

©John F. Rider, Publisher

UNITED MOTORS SERVICE

MODEL 1109 Delco
Schematic
Voltage

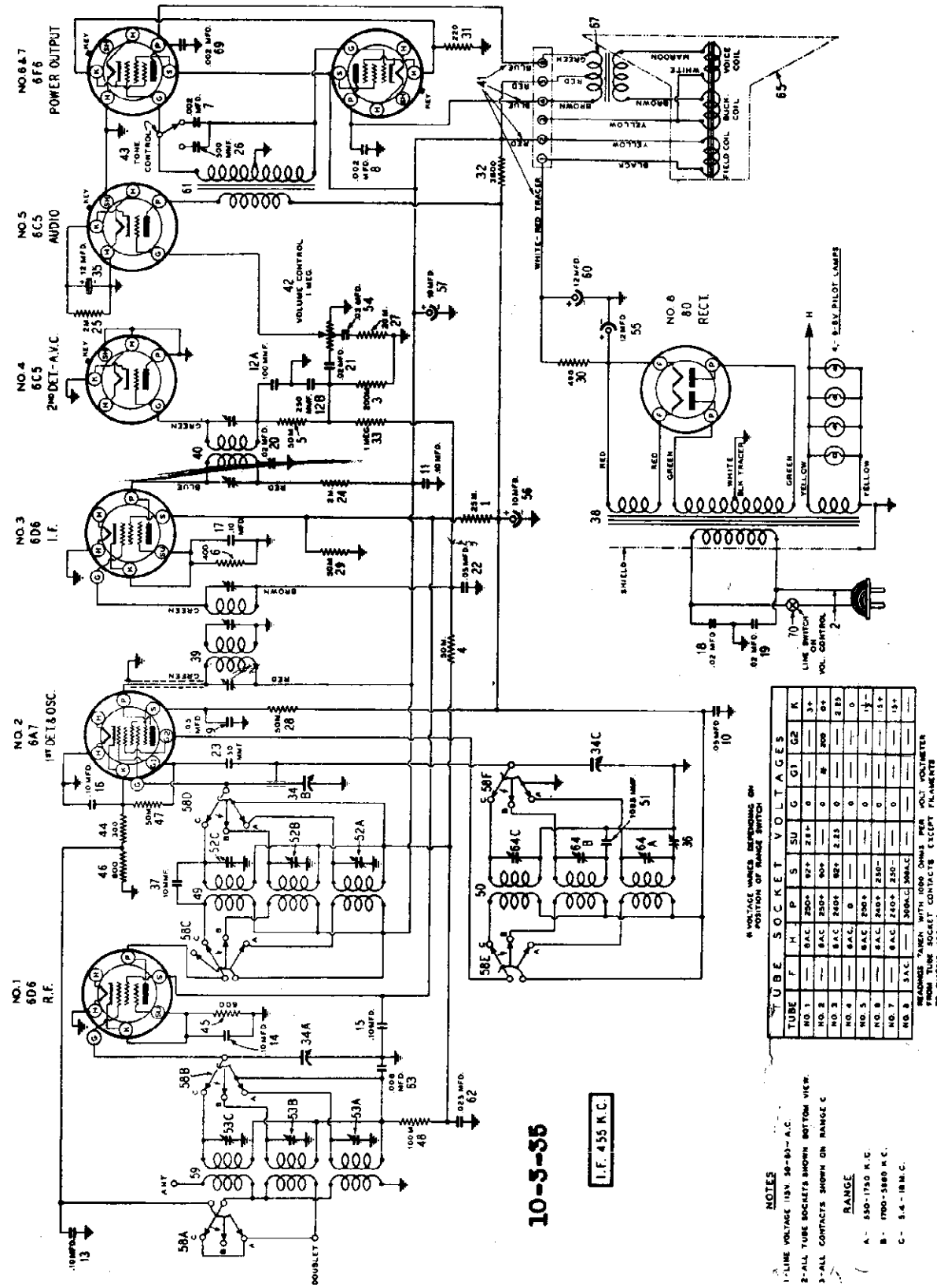

DELCO MODEL 1109 CIRCUIT DIAGRAM

TUBE SOCKET VOLTAGES

TUBE	F	H	P	S	SU	G	G1	G2	K
NO. 1	—	6.3 A.C.	250+	92+	28+	0	—	—	3+
NO. 2	—	6.3 A.C.	250+	90+	—	0	8-	200	6+
NO. 3	—	6.3 A.C.	240+	82+	2.25	0	—	—	2.25
NO. 4	—	6.3 A.C.	0	—	—	0	—	—	0
NO. 5	—	6.3 A.C.	250+	—	—	0	—	—	1.5+
NO. 6	—	6.3 A.C.	240+	230-	—	0	—	—	15+
NO. 7	—	6.3 A.C.	240+	230-	—	0	—	—	15+
NO. 8	3 A.C.	—	300A.C.	300A.C.	—	—	—	—	—

READINGS TAKEN WITH 1000 OHMS PER VOLT VOLTMETER FROM TUBE SOCKET CONTACTS TO CHASSIS GROUND.

* VOLTAGE VARIES DEPENDING ON POSITION OF RANGE SWITCH

NOTES

1 - LINE VOLTAGE 115 V. 50-60~ A.C.

2 - ALL TUBE SOCKETS SHOWN BOTTOM VIEW.

3 - ALL CONTACTS SHOWN ON RANGE C

RANGE

A - 550-1750 K.C.
B - 1700-5800 K.C.
C - 5.4-18 M.C.

©John F. Rider, Publisher

MODEL 1109 Delco
Socket,Trimmers
Chassis,Dial Parts

UNITED MOTORS SERVICE

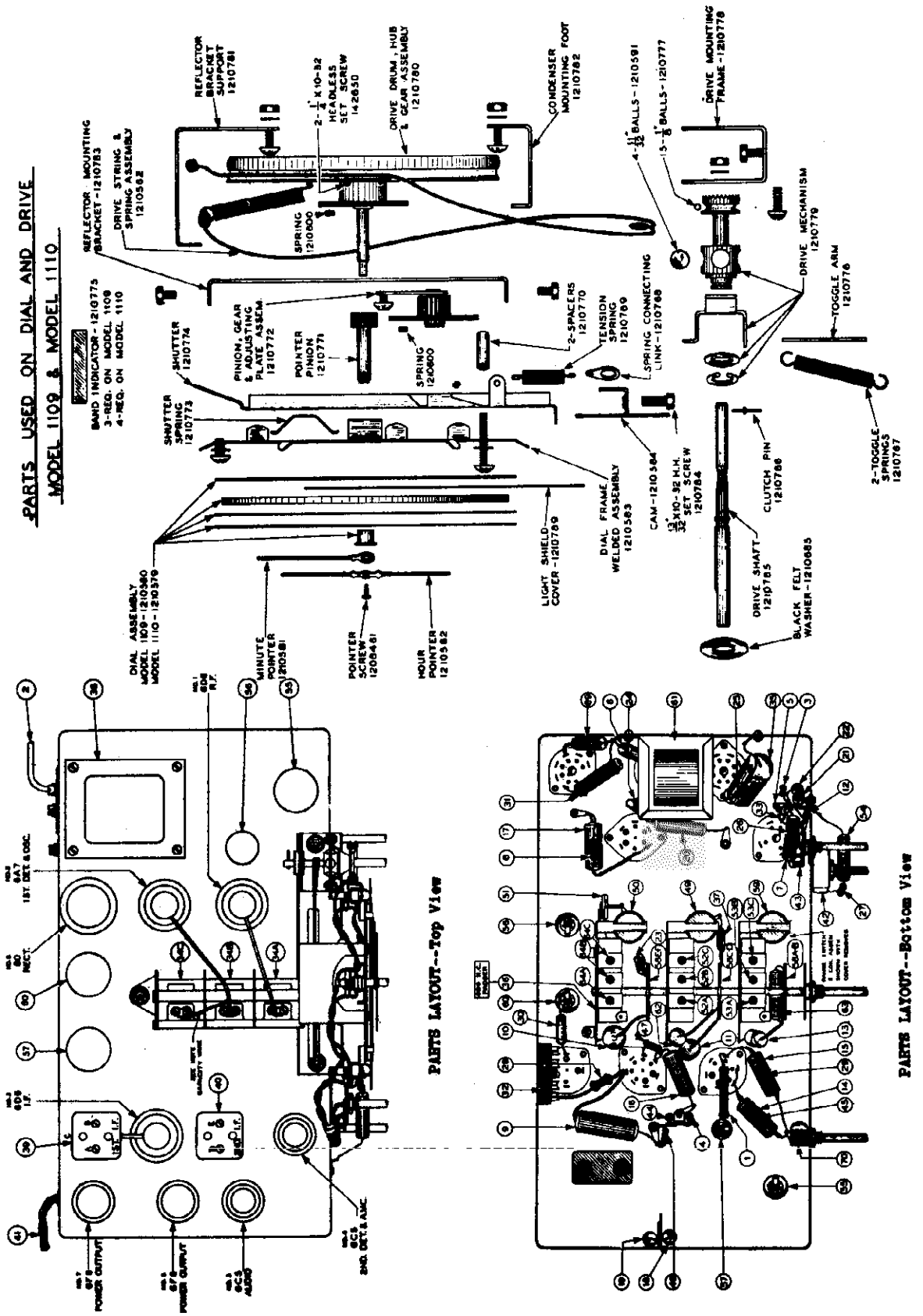

©John F. Rider, Publisher

GENERAL: The Delco Model 1109 is an eight tube, 110 volt A.C., 50-60 cycle, three band receiver with A.V.C., Tone Control, "Band Spread" dial, and a full 10" dynamic speaker. This receiver has incorporated in its chassis, four of the new metal type tubes. The complete tube complement is as follows: 6D6 R-F Amplifier, 6A7 Detector-Oscillator, 6D6 I-F Amplifier, 6C5 (Metal) 2nd Detector - A.V.C., 6C5 (Metal) 1st A-F Amplifier, two type 6F6 (Metal) tubes in the output stage, connected for push-pull operation and an 80 type Rectifier.

The frequency ranges on the three bands covered are: American Broadcast Band (A) 540 to 1800 K.C., Police and Amateur Band (B) 1800 to 5600 K.C.,and the Foreign Short Wave Band (C) 5.6 to 18 Megacycles.

CIRCUIT ALIGNMENT

All of the adjustable trimmer condensers are very accurately adjusted at the factory and should need no further adjustment unless tampered with in the field or a defective coil has been replaced. If realignment is found necessary the circuits can be properly adjusted only with the use of a calibrated test oscillator and an output meter.

The receiver should be aligned in a location free from local interference (interference caused by motors, flashers, automobile ignition, etc.) as high frequency disturbances will cause difficulties when adjusting the short wave circuits.

1. Peaking I-F Stages at 455 Kilocycles

   (a) Connect the signal lead of the test oscillator to the grid cap of the 6A7 tube through a .25 mfd. condenser. DO NOT REMOVE THE GRID CLIP FROM THE TUBE.

   (b) Connect the ground lead of the test oscillator to the receiver chassis.

   (c) Set receiver dial pointer to 1400 K.C. and band change switch on position "A".

   (d) Place test oscillator in operation at 455 K.C.

   (e) Turn receiver volume control to the maximum position.

   (f) Adjust the five I-F trimmers on the two I-F coils (Illus. 39 & 40) carefully for maximum output in the following sequence -- A-B-C-D-E. During alignment, maintain as low a signal output from the test oscillator as is consistant with obtaining a readable indication on the output meter.

2. Aligning at 1400 Kilocycles

   (a) Connect the signal lead of the test oscillator to the antenna binding post through a .0002 mfd. condenser. (Leave test oscillator ground lead connected to the chassis ground).

   (b) Turn dial knob until condensers are fully MESHED. The dial pointer (hour hand) should be on the horizontal line of the dial, pointing to 9 and 3 o'clock. The minute hand should be at 12 o'clock or in the vertical position.

   (c) Set test oscillator to 1400 K.C.

   (d) Turn dial pointer 1400 K.C. and leave band change switch on position "A" (extreme left hand position).

   (e) Adjust the Band "A" oscillator parallel trimmer, Illus. 64A (Fig. 3) to maximum output.

   (f) Adjust the Band "A" R-F parallel trimmer, Illus. 52A (Fig. 3) to maximum output.

   (g) Adjust the Band "A" Antenna parallel trimmer, Illus. 53A to maximum output.

3. Aligning at 600 K.C.

   (a) Set the test oscillator to 600 Kilocycles.

   (b) Tune in the 600 K.C. signal with the receiver dial in the region of 600 K.C. for maximum output. (This point does not have to be exactly at the 600 K.C. dial setting.)

   (c) Adjust the Band "A" oscillator padding condenser, Illus. #36 (Fig. 3) while rocking the tuning condenser back and forth through resonance until no further increase in output can be obtained.

   (d) Repeat operations (c), (d), (e), (f), and (g) under "Aligning at 1400 K.C." for accurate adjustments.

4. Aligning at 5 Megacycles (5000 K.C.)

   (a) Turn band change switch to Band "B" (middle position).

   (b) Set the test oscillator to 5 megacycles.

   (c) Turn receiver dial pointer to 5 megacycles.

   (d) Adjust the Band "B" oscillator parallel trimmer, Illus. #64B (Fig. 3) to maximum output.

   (e) Adjust the Band "B" R-F parallel trimmer, Illus. #52B (Fig. 3) to maximum output.

   (f) Adjust the Band "B" Antenna parallel trimmer, Illus. 53B (Fig. 3) to maximum output.

   (g) Check dial setting at 1800 K.C.

5. Aligning at 18 Megacycles (18,000 K.C.)

   (a) Replace the .0002 mfd. series condenser in the signal lead from the test oscillator with a 400 ohm carbon resistor.

   (b) Turn the band change switch to Band "C" (extreme right hand position).

   (c) Turn receiver dial pointer to 18 megacycles.

   (d) Set the test oscillator to 18 megacycles.

   (e) Adjust the Band "C" oscillator parallel trimmer, Illus. #64C (Fig. 3) to maximum output.

   NOTE: On the 18 Megacycle Alignment of trimmer Illus. #64C, it will be noted that there are two settings at which the signal will be received. Use the signal received with oscillator parallel trimmer setting having the most capacity or the point at which the trimmer screw is farthest in.

   (f) Adjust the Band "C" R-F parallel trimmer, Illus. 52C (Fig. 3) to maximum output.

   (g) Adjust the Band "C" Antenna parallel trimmer, Illus. 53C (Fig. 3) to maximum output.

©John F. Rider, Publisher

MODEL 1110 Delco
Schematic

UNITED MOTORS SERVICE

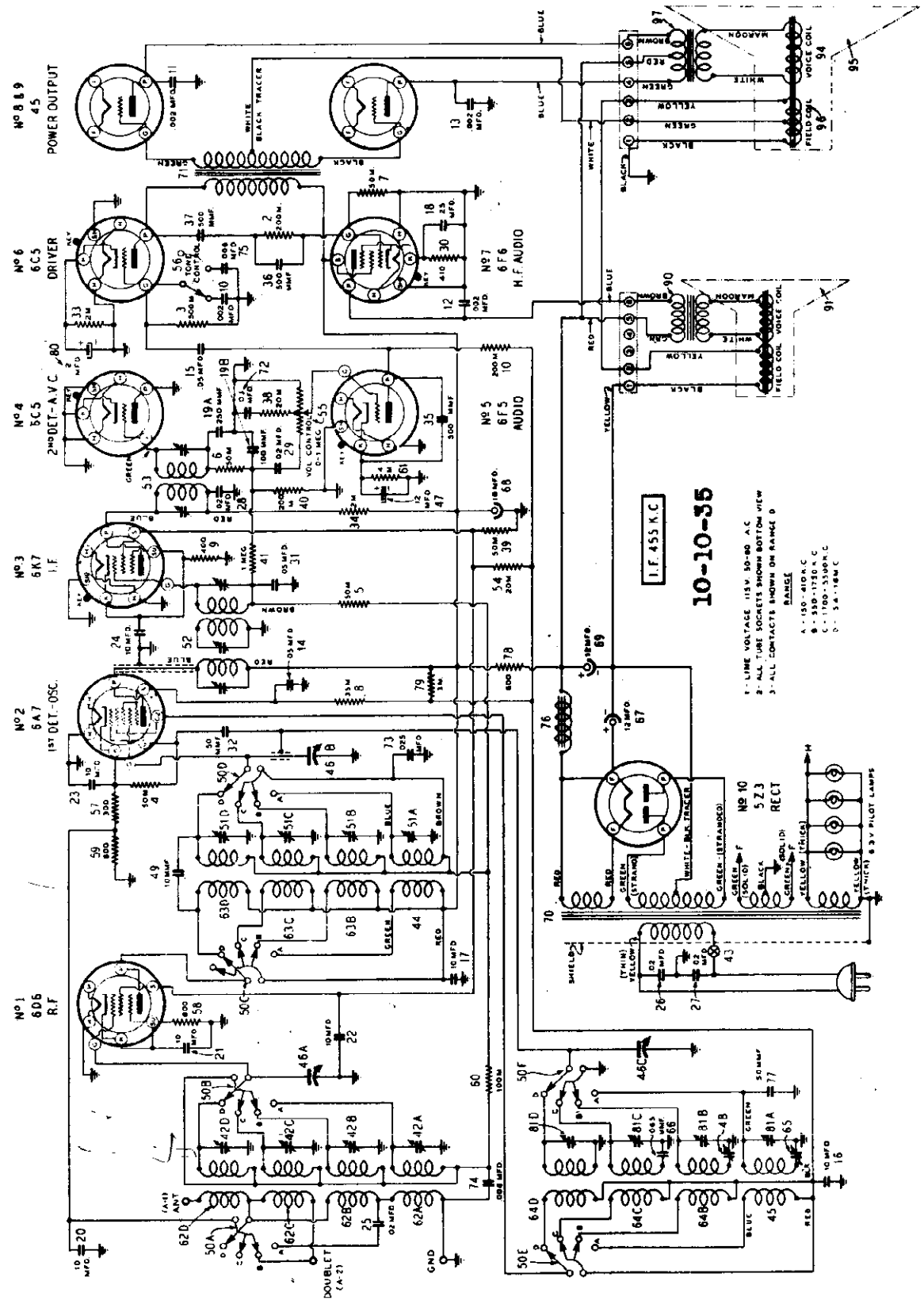

©John F. Rider, Publisher

UNITED MOTORS SERVICE

MODEL 1110 Delco .
Socket,Trimmers
Chassis,Dial Parts

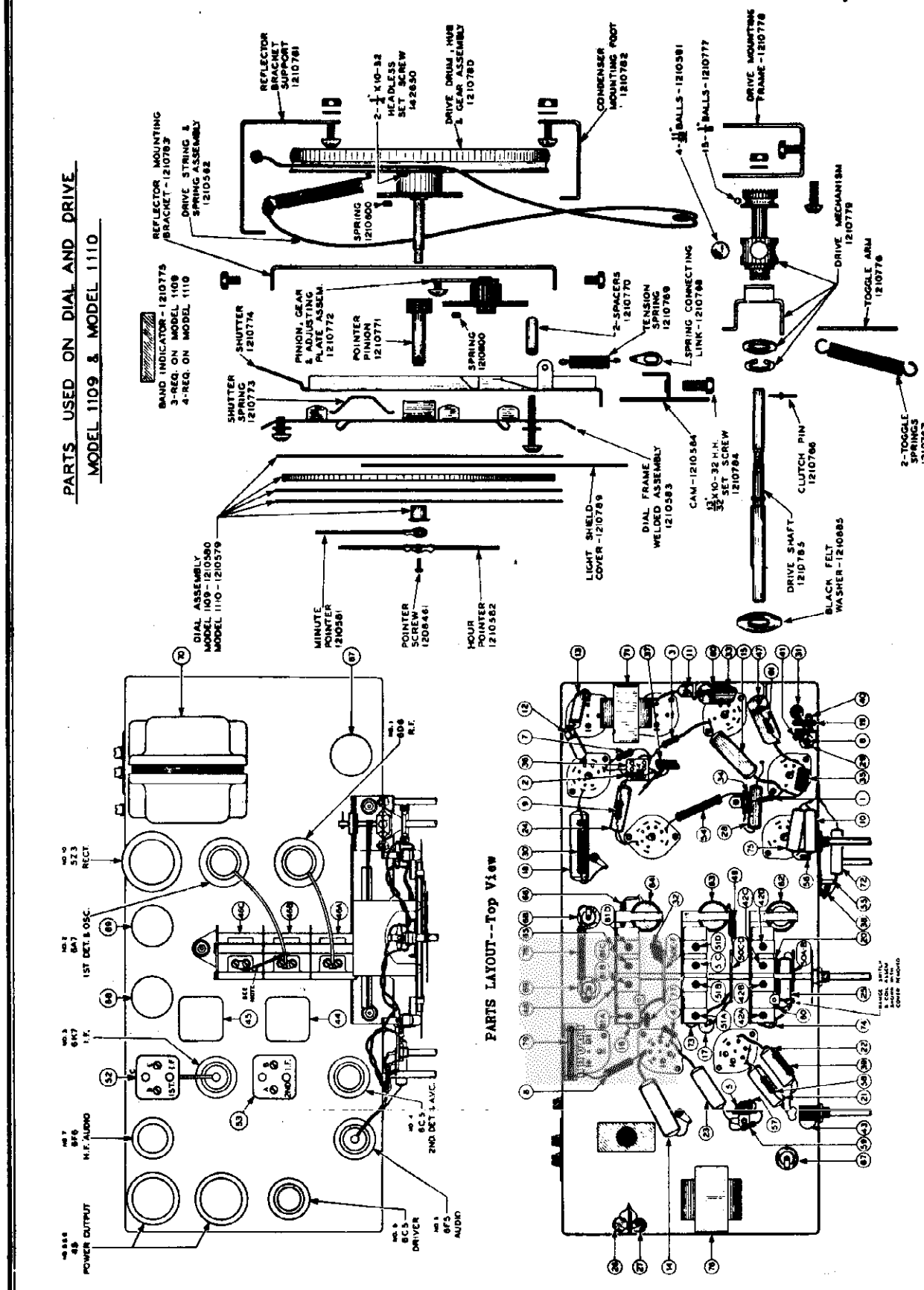

©John F. Rider, Publisher

MODEL 1110 Delco
Alignment

UNITED MOTORS SERVICE

GENERAL: The Delco Model 1110 is a ten tube, 110 volt AC, 50-60 cycle, four band receiver with A.V.C., Tone Control, "Band Spread" dial and equipped with two dynamic speakers. This receiver has incorporated in its chassis five of the new metal type tubes. The complete tube complement is as follows: 6D8 R-F Amplifier, 6A7 Detector-Oscillator, 6A7 (Metal) I-F Amplifier, 6C6 (Metal) 2nd Detector-A.V.C., 6F5 (Metal) Driver, 6F6 High Frequency A-F Amplifier, two type 45 tubes in the Output Stage, and a type 5Z3 Rectifier.

The frequency ranges on the four bands covered are: Weather Band (A) 150 to 410 K.C. American Broadcast Band (B) 550 to 1760 K.C., Police and Amateur Band (C) 1700 to 5500 K.C., and the Foreign Short Wave Band (D) 5.4 to 18 Megacycles.

AUDIO SYSTEM

A two channel audio system is used in the Delco Model 1110 receiver--one channel, comprising a 6F6 tube coupled into a small speaker reproduces the high notes of the musical range and the other channel comprising two type 45 tubes connected in push-pull reproduces the low and middle register of the musical range. From a service viewpoint this audio system should be considered as dual audio amplifier. Care should be taken when changing any part of the speaker system, to see that the polarity of all transformers and voice coils remain as originally connected in order that the speakers will be in "phase." If this is not done, one speaker will have a tendency to cancel out certain frequency responses of the other. Particular attention should be given to the wire colors shown on the Circuit Diagram in replacing any parts. To determine whether the speakers are in phase--short out the voice coil on the large speaker to see that the small speaker is reproducing the "highs" and then reverse the voice coil leads on the large speaker, leaving them in the position of the strongest and best reception.

CIRCUIT ALIGNMENT

All of the adjustable condensers are very accurately adjusted at the factory and should need no further adjustment unless tampered with in the field or a defective coil has been replaced. If realignment is found necessary the circuits can be properly adjusted only with the use of a calibrated test oscillator and an output meter.

The receiver should be aligned in a location free from local interference (interference caused by motors, flashers, automobile ignition, etc.) as high frequency disturbances will cause difficulties when adjusting the short wave circuits.

DIAL SETTING CHECK: Turn dial knob until rotor plates of condenser gang are fully meshed. The "hour" hand should be on the horizontal line of the dial pointer to 9 and 3 o'clock. The "minute" hand should be in a vertical position or at 12 o'clock. This check should be made before attempting any adjustments.

CAUTION: Do not attempt to make any adjustments of the trimmer condensers with the band change switch cover removed.

1. Peaking I-F Stages at 455 Kilocycles

(a) Connect the signal lead of the test oscillator to the grid cap of the 6A7 tube through a .25 mfd. condenser. DO NOT REMOVE THE GRID CLIP FROM THE TUBE.

(b) Connect the ground lead of the test oscillator to the receiver chassis.

(c) Set receiver dial pointer to 1400 K.C. and band change switch on position "B".

(d) Place test oscillator in operation at 455 K.C.

(e) Turn receiver volume control to the maximum position.

(f) Adjust the five I-F trimmers on the two I-F coils Illus. 32 & 35 (Fig. 8) carefully for maximum output in the following sequence--A-B-C-D-E. During alignment maintain as low a signal output from the test oscillator as is consistant with obtaining a readable indication on the output meter.

2. Aligning at 175 Kilocycles (Band "A")

(a) Connect the signal lead of the test oscillator to the antenna binding post on the chassis through at .0002 mfd. condenser. Leave test oscillator ground lead connected to the receiver chassis.

(b) Place test oscillator in operation at 175 K.C.

(c) Turn band change switch to Band "A" (extreme left).

(d) Tune in the 175 K.C. signal from the test oscillator with the receiver dial for maximum output. (This point does not have to be exactly at the 175 K.C. dial setting).

(e) Adjust the Band "A" oscillator tracking condenser, Illus. 45 (Fig. 8) while rocking the tuning condenser plates back and forth through resonance until no further increase in output can be obtained.

3. Aligning at 350 Kilocycles (Band "A")

(a) Place test oscillator in operation at 350 K.C., leaving the leads connected the same as before.

(b) Turn dial pointer to 350 K.C.

(c) Adjust the Band "A" oscillator parallel condenser, Illus. 51A (Fig. 8) to maximum output.

(d) Adjust the Band "A" R-F parallel trimmer, Illus. 51A (Fig. 8) to maximum output.

(e) Adjust the Band "A" Antenna parallel trimmer, Illus. 48A (Fig. 8) to maximum output.

(f) Repeat operations under paragraph #3 "aligning at 175 Kilocycles" for accurate adjustments.

4. Aligning at 1400 Kilocycles (Band "B")

(a) Place test oscillator in operation at 1400 K.C.

(b) Turn dial pointer to 1400 K.C. setting and band change switch to Band "B".

(c) Adjust the Band "B" oscillator parallel condenser, Illus. 51B (Fig. 8) to maximum output.

(d) Adjust the Band "B" R-F parallel trimmer, Illus. 51B (Fig. 8) to maximum output.

(e) Adjust the Band "B" Antenna parallel trimmer Illus. 48B (Fig. 8) to maximum output.

5. Aligning at 600 Kilocycles (Band "B")

(a) Place test oscillator in operation at 600 K.C.

(b) Tune in the 600 K.C. test oscillator signal with the receiver dial for maximum output. (This point does not have to be exactly at the 600 K.C. dial setting).

(c) Adjust the Band "B" oscillator tracking condenser, Illus. 46 while rocking the tuning condenser plates back and forth through resonance until no further increase in output can be obtained.

(d) Repeat operations under paragraph #4 "aligning at 1400 Kilocycles" for accurate adjustments.

6. Aligning at 5 Megacycles (5000 K.C. Band "C")

(a) Place test oscillator in operation at 5 megacycles.

(b) Turn dial pointer to 5 megacycles and band change switch to Band "C".

(c) Adjust the Band "C" oscillator parallel trimmer, Illus. #51C to maximum output.

(d) Adjust the Band "C" R-F Parallel trimmer Illus. #51C to maximum output.

(e) Adjust the Band "C" Antenna parallel trimmer Illus. #48C (Fig. 8) to maximum output.

7. Aligning at 18 Megacycles (18,000 K.C. Band "D")

(a) Replace the .0002 mfd. condenser in the signal lead from the test oscillator with a 400 ohm carbon resistor, leaving the test oscillator leads connected the same as before.

(b) Turn the band change switch to Band "D" (extreme right hand position).

(c) Turn the receiver dial pointer to 18 Megacycles.

(d) Place test oscillator in operation at 18 Megacycles.

(e) Adjust the Band "D" oscillator parallel trimmer, Illus. 51D (Fig. 8) to maximum output.

NOTE: On the 18 Megacycle Alignment of trimmer Illus. 51D, it will be noted that there are two settings at which the signal will be received. Use the signal received with the trimmer setting having the most capacity or the point at which the trimmer screw is the farthest in.

(f) Adjust the Band "D" R-F parallel trimmer Illus. 51D to maximum output.

(g) Adjust the Band "D" Antenna parallel trimmer, Illus. 48D to maximum output.

TUBE SOCKET VOLTAGES

Tube	No.	*H	P	S	S2	G1	G2	K
6D8	1	6.0	240	90	3.25			3.25
6A7		6.0	240	85		1.0	200	7.75
6A7		6.0	225	90	3.0			0
6C6		6.0						0
6F5		6.0	75	0				0
6C8		6.0	225					7.5
6F6		6.0	240	250				18.5
45		2.5	250					
45		2.5	250					
5Z3	10	5.0	*400				55	

*A.C. voltage readings.

Above readings taken from tube socket contacts to ground (except filaments) using a line voltage of 115 volts A.C. and a meter having a resistance of 1000 ohms per volt.

NOTE

A neutralizing capacity is used in this receiver, in the form of a small wire soldered to the stator of the oscillator section of the condenser gang, (see Fig. 8) and capacity coupled to the 6A7 tube grid lead.

©John F. Rider, Publisher

UNITED MOTORS SERVICE

MODEL 3205 Delco
Schematic
Voltage

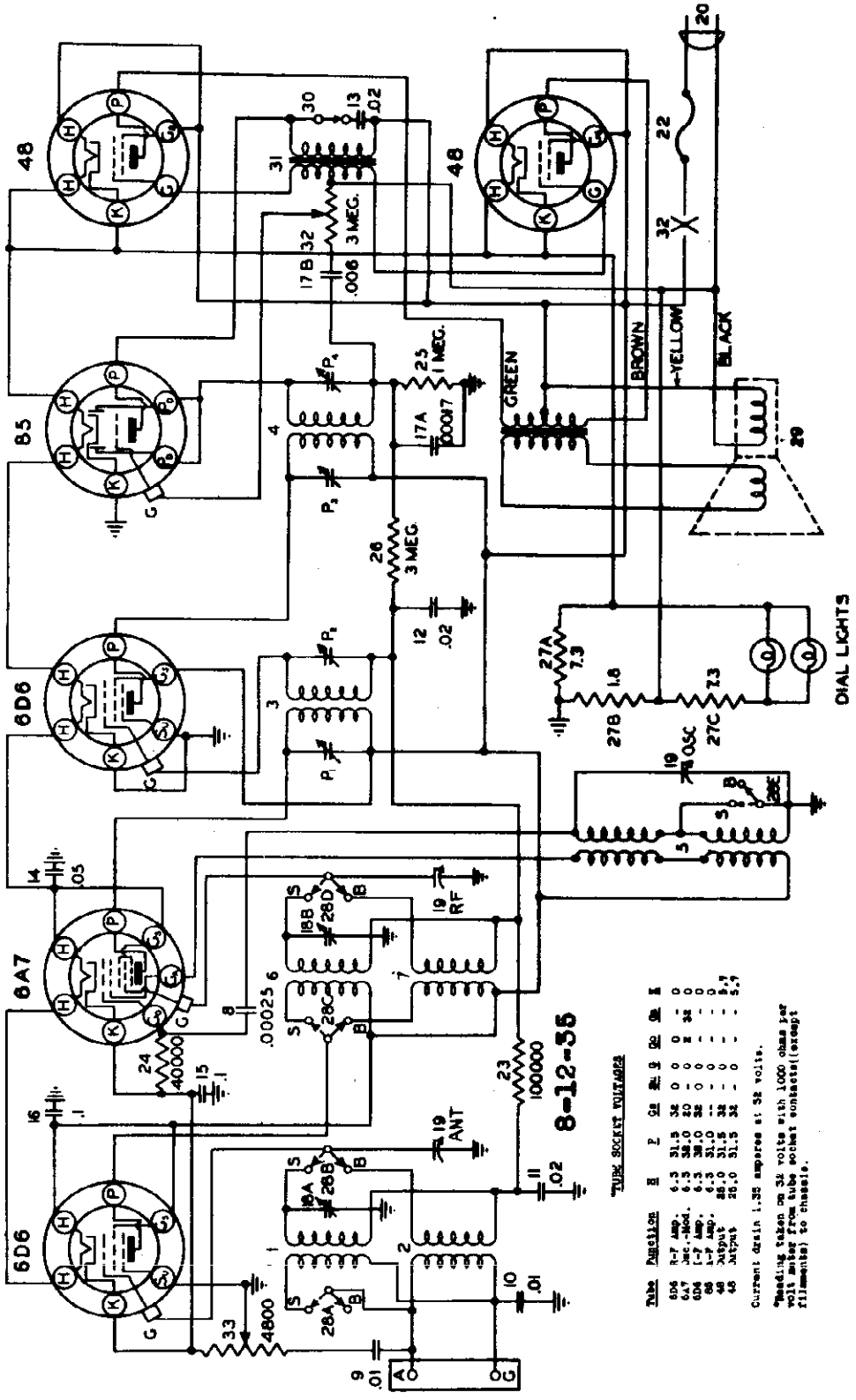

INTERMEDIATE FREQUENCY 450 K.C.

DELCO MODEL 3205 CIRCUIT DIAGRAM

©John F. Rider, Publisher

MODEL 3205 Delco
Socket, Trimmers
Chassis

UNITED MOTORS SERVICE

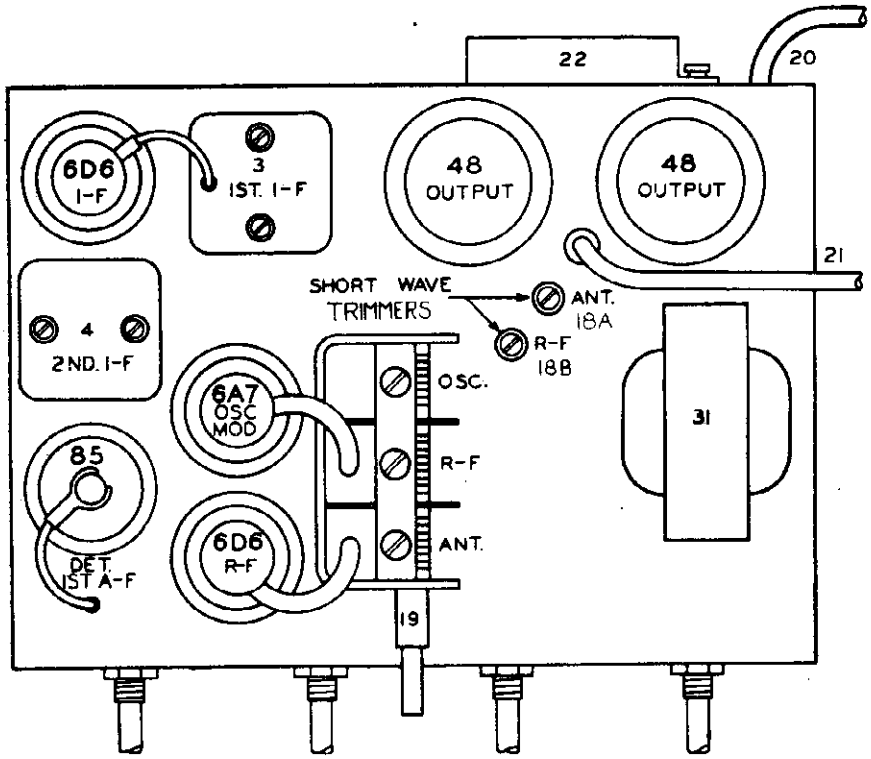

PARTS LAYOUT--Top View

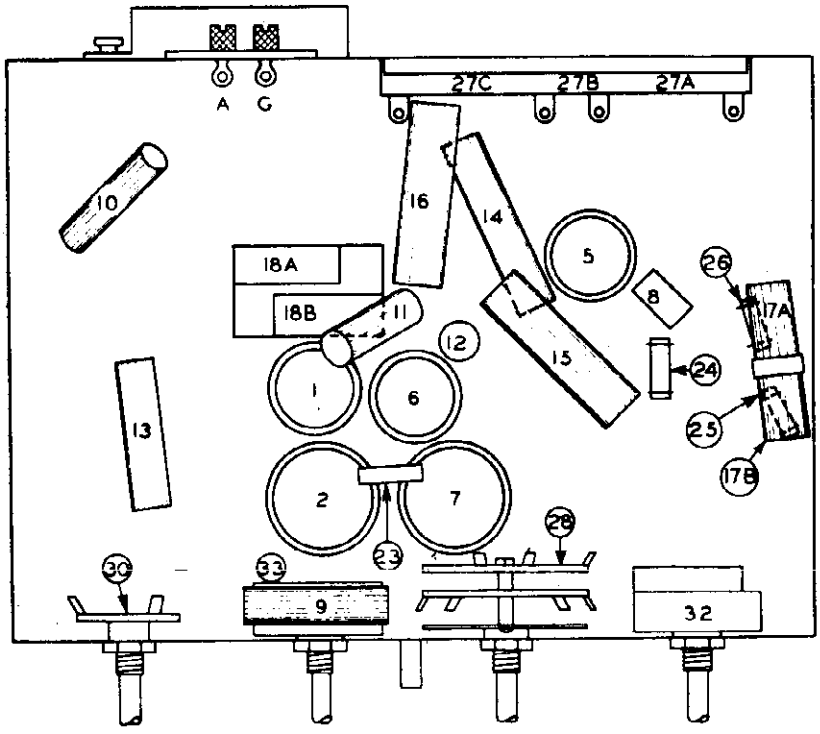

PARTS LAYOUT--Bottom View

©John F. Rider, Publisher

GENERAL: The Delco Model 3205 is a six tube, 32 volt, two band receiver with A.V.C. and sensitivity control. The tubes used are: 6D6 R-F Amplifier, 6A7 Oscillator-Modulator, 6D6 I-F Amplifier, 85 Detector and 1st Audio Amplifier and two type 48 Output Tubes.

The frequency range is from 540 to 1570 kilocycles on the Broadcast Band and from 1570 to 4000 kilocycles on the Short Wave Band.

SENSITIVITY CONTROL

The sensitivity control is a low resistance potentiometer, (Illus. #33) One end is connected to the antenna lead and the other end is connected to the cathodes of the R-F and Osc.-Mod. tubes. The moving arm is connected to the chassis. When the knob is turned toward the left (counter-clockwise) it simultaneously decreases the resistance across the primary of the antenna coil and increases the grid bias on the R-F and Osc.-Mod. tubes. This has the effect of decreasing the sensitivity of the receiver and increasing the selectivity. Since the sensitivity of the R-F and I-F amplifiers is simultaneously decreased, it serves as a control of overall oscillations which sometimes develop with abnormally high line voltage.

GROUND CIRCUIT

DO NOT ground the chassis except through the use of the "GND" terminal on the terminal strip located on the rear of the chassis. This terminal connects to the chassis frame through a series condenser in order to prevent a short circuit when operating the receiver on a 32 volt system with the positive side grounded.

CIRCUIT ALIGNMENT

All of the adjustable condensers are very accurately adjusted at the factory and should need no further adjustment unless tampered with in the field or a defective coil has been replaced. If realignment is found necessary, the circuits can be properly adjusted only with the use of a test oscillator and an output meter.

1. Peaking I-F Stages at 450 Kilocycles

   (a) Connect the antenna of the signal generator to the control grid connection on top of the 6A7 tube through a .02 mfd. series condenser. DO NOT REMOVE THE GRID CLIP.

   (b) Connect the ground terminal of the signal generator to the ground terminal of the receiver.

   (c) Set the signal generator to exactly 450 kilocycles.

   (d) Rotate the receiver tuning condenser until the rotor plates are completely meshed.

   (e) Turn the band selector switch to the left. (Short Wave)

   (f) Adjust the line voltage to 32 volts.

   (g) Turn the volume control and the sensitivity control all the way to the right.

   (h) With the signal generator set to the lowest usable output level adjust the I-F trimmer condensers for maximum signal output.

   NOTE: The I-F trimmers are located on top of the I-F coils, Fig. 2 and may be adjusted with an insulated screw driver. Always make the adjustments very carefully, going over them several times to insure that the final setting is at resonant frequency.

2. Aligning R-F Circuits--Broadcast Band (540-1570 K.C.)

   (a) Turn the band selector switch to the right hand position. (Broadcast Band)

   (b) Rotate the tuning condenser until the rotor plates are completely out of mesh.

   (c) Connect the antenna terminal of the signal generator to the receiver antenna terminal through a .00025 mfd., mica, series condenser.

   (d) Connect the ground terminal of the signal generator to the ground terminal of the receiver.

   (e) Set the signal generator to exactly 1575 kilocycles.

   (f) Adjust the "Osc." section (rear section) of the tuning condenser gang for maximum signal output.

   (g) Set the signal generator to 1400 kilocycles.

   NOTE: If electrical interference causes an excessive reading on the output meter, making alignment difficult, it can be reduced by connecting a 5 to 10 mfd., paper, condenser between the ground terminal of the receiver and the chassis frame.

   (h) Tune in the 1400 kilocycle signal with tuning condenser for maximum output.

   NOTE: Do not disturb the setting of the oscillator trimmer (rear section) as this is adjusted at 1575 kilocycles only and any further adjustment at this point would affect both the tuning range of the receiver and the tracking of its circuits.

   (i) Adjust the "R-F" parallel trimmer of the condenser gang for maximum output.

   (j) Adjust the "Ant." parallel trimmer of the condenser gang for maximum output.

   (k) Repeat operations (h), (i) and (j) until no further improvement in output can be made.

3. Aligning R-F Circuits--Short Wave (1570-4000 K.C.)

   (a) Set the signal generator to 2500 kilocycles.

   (b) Turn the band selector switch to the left. (Short Wave)

   (c) Tune in the 2500 kilocycle signal with the tuning condenser for maximum output.

   (d) Adjust the R-F short wave padding condenser, Illus. #18B for maximum output.

   (e) Adjust the Ant. short wave padding condenser, Illus. #18A for maximum output.

©John F. Rider, Publisher

MODELS 3206,3207 Delco
Schematic

UNITED MOTORS SERVICE

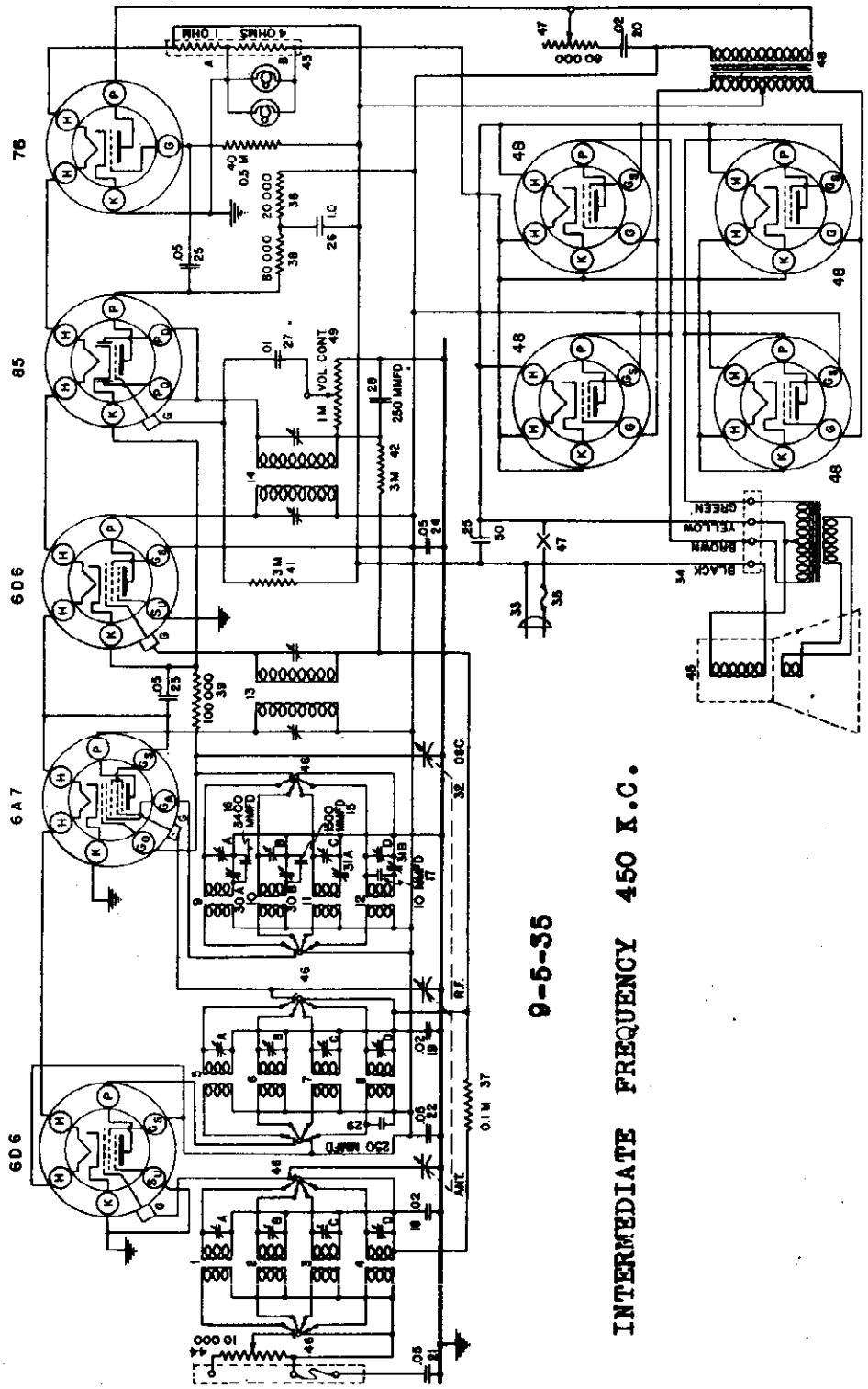

9-5-35

INTERMEDIATE FREQUENCY 450 K.C.

DELCO MODEL 3206 and 3207 CIRCUIT DIAGRAM

©John F. Rider, Publisher

UNITED MOTORS SERVICE

MODELS 3206,3207 Delco
Socket,Trimmers
Chassis

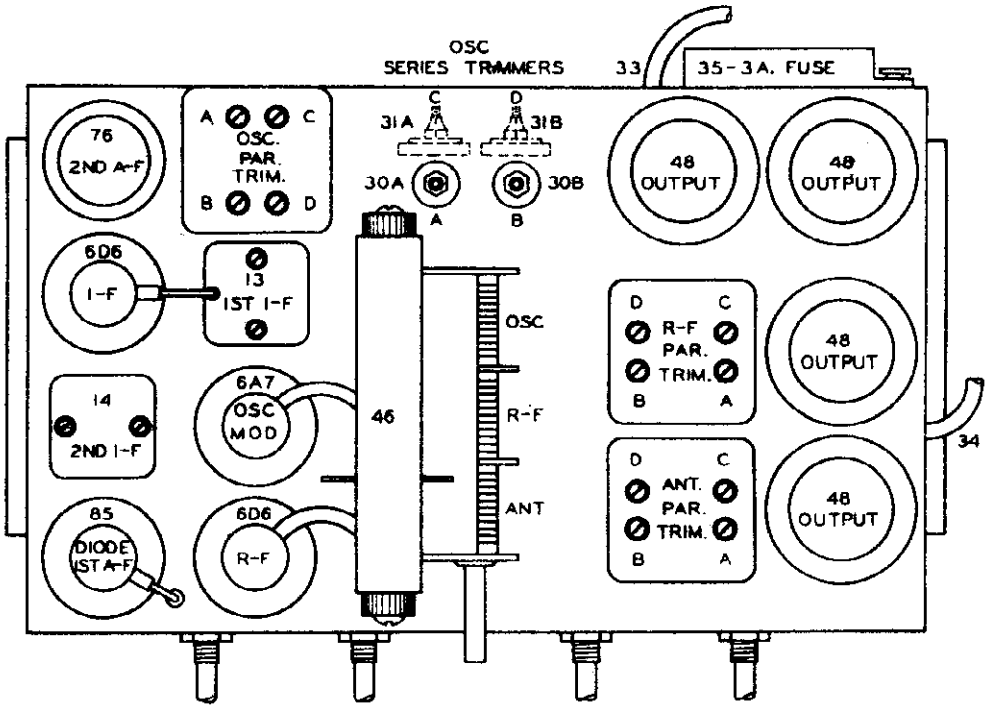

PARTS LAYOUT--Top View

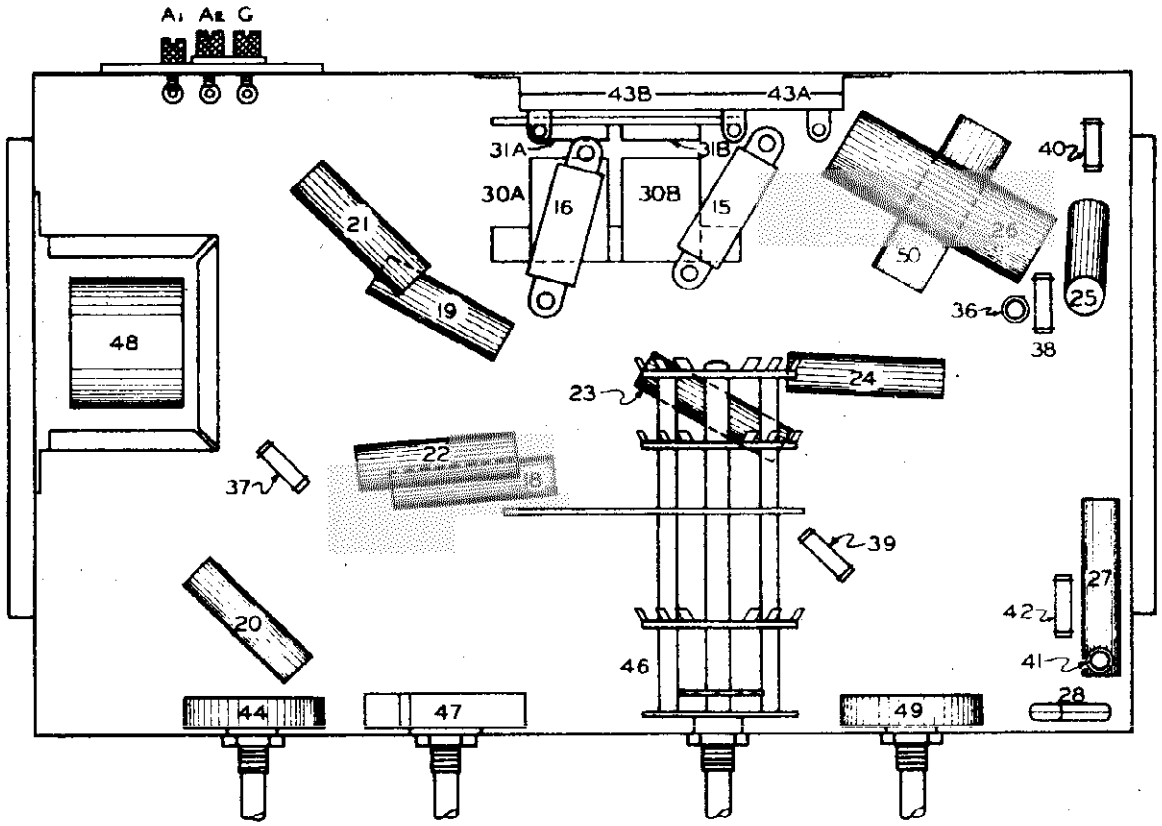

PARTS LAYOUT--Bottom View

©John F. Rider, Publisher

MODELS 3206,3207 Delco
Alignment,Voltage

UNITED MOTORS SERVICE

(h) Repeat operations (e), (f) and (g).

(i) Set the signal generator to 6 megacycles. (6000 K.C.)

(j) Tune-in the 6 megacycle signal with the station selector in the region of 6.0 on the dial (Band A) for maximum reading on the output meter.

(k) Adjust the Band A oscillator series trimmer (Illus. #30A, Fig. 2) while rocking the condenser gang plates back and forth slightly, until no further increase in output can be obtained.

(l) Repeat operations (e), (f) and (g) for more accurate adjustments.

"TUBE SOCKET VOLTAGES

Tube	Function	H	P	Gs	Su	G	Gc	Ga	K
6D6	R-F Amplifier	6.4	30.5	30.5					
6A7	Osc-Mod	6.4	30.5	17.8				30.5	
6D6	I-F Amplifier	6.4	30.5	30.5					
35	Det. & 1st A-F	6.4	2.0						
76	A-F Amplifier	6.4	30.0						
46	(4) Output	25.2	30.0	30.5		1.6			6.2

Current drain 2.0 amperes at 32 volts.

**Oscillator grid (Go) voltage varies from - 1 at the low frequency end of the dial to - 3 at the high frequency end of the dial.

* Readings taken on 32 volt power supply with 1000 ohms per volt voltmeter from tube socket contacts (except filaments) to chassis.

GENERAL: The Delco Models 3206 (table model) and 3207 (console model) employ the same chassis which is a nine tube, four band receiver. The tubes used are 6D6 R-F amplifier, 6A7 Oscillator-Modulator, 6D6 I-F Amplifier, 35 Detector and A-F Amplifier and four type 46 output tubes in push-pull parallel.

The frequency ranges on the four bands covered are: Foreign Short Wave Band (A) 5.8 to 15.3 megacycles, Police and Amateur Band (B) 1550 to 4500 kilocycles, American Broadcast Band (C) 540 to 1600 kilocycles and the Weather Band (D) 148 to 400 kilocycles.

SENSITIVITY CONTROL

The sensitivity control is a potentiometer connected across the A1 and A2 terminals on the antenna and ground terminal strip on the rear of the chassis. The movable arm is connected to the antenna coil. It is used to vary the strength of the signal in order to prevent overloading the R-F amplifier because of the low plate voltage used.

GROUND CIRCUIT

DO NOT ground the chassis except through the use of the "GND" terminal on the terminal strip located on the rear of the chassis. This terminal connects to the chassis frame through a series condenser in order to prevent a short circuit when operating the receiver on a 32 volt system with the positive side grounded.

CIRCUIT ALIGNMENT

All of the condensers are very accurately adjusted at the factory and should need no further adjustment unless tampered with in the field or a defective coil has been replaced. If realignment is found necessary, the circuits can be properly adjusted only with the use of a signal generator and an output meter.

1. Peaking I-F Stages at 450 Kilocycles

(a) Connect the antenna of the signal generator to the control grid connection on top of the 6A7 tube through a .02 mfd. series condenser. DO NOT REMOVE THE GRID CLIP.

(b) Connect the ground terminal of the signal generator to the ground terminal of the receiver.

(c) Set the signal generator to exactly 450 kilocycles.

(d) Rotate the receiver tuning condenser until the rotor plates are completely out of mesh.

(e) Turn the band selector switch to Band A. (First position on left)

(f) Adjust the line voltage to 32 volts.

(g) Turn the volume control and sensitivity control knobs all the way to the right.

(h) With the signal generator set to the lowest usable output level, adjust the I-F trimmer condensers for maximum signal output.

NOTE: The I-F trimmers are located on top of the I-F coils, Fig. 2, and may be adjusted with an insulated screw driver. Always make the adjustments very carefully, going over them several times to insure that the final setting is at resonant frequency.

2. Aligning R-F circuits Band "D" (148-400 K.C.)

(a) Turn the band selector switch to the first position on the right. (Band D)

(b) Rotate the receiver tuning condenser until the rotor plates are completely IN MESH and adjust the dial pointer, if necessary, so that it is exactly horizontal.

(c) Connect the antenna terminal of the signal generator to terminal "A1" on the rear of the receiver through a .00025 mfd. mica series condenser.

(d) Set the signal generator to 400 kilocycles.

(e) Rotate the station selector until the rotor plates are completely OUT OF MESH.

(f) Adjust the Band D "Osc." parallel trimmer (Fig. 2), for maximum output.

NOTE: If electrical interference causes an excessive reading on the output meter, making alignment difficult, it can be reduced by connecting a 5 to 10 mfd. paper condenser between the ground terminal of the receiver and the chassis frame.

(g) Adjust the Band D "R-F" parallel trimmer, (Fig. 2), for maximum output.

(h) Adjust the Band D "Ant" parallel trimmer, (Fig. 2), for maximum output.

(i) Repeat operations (f), (g) and (h) until no further improvement in output can be obtained.

(j) Set the signal generator to 150 kilocycles.

(k) Tune-in the 150 kilocycle signal with the station selector in the region of 15 on the dial (Band D), for maximum reading on the output meter.

(l) Adjust the Band D oscillator series trimmer (Illus. #31B, Fig. 2) while rocking the condenser gang plates back and forth slightly, until no further increase in output can be obtained.

(m) Repeat operations (f), (g) and (h) for more accurate adjustments.

3. Aligning R-F Circuits - Band C (540-1600 K.C.)

(a) Turn the band selector switch to the second position from the right. (Band C)

(b) Set the signal generator to 1400 kilocycles.

(c) Rotate the station selector until the pointer points to 140. (Band C)

(d) Adjust the Band C "Osc." parallel trimmer (Fig. 2), for maximum signal output.

(e) Adjust the Band C "R-F" parallel trimmer, (Fig. 2), for maximum signal output.

(f) Adjust the Band C "Ant" parallel trimmer (Fig. 2), for maximum signal output.

(g) Repeat operations (d), (e) and (f).

(h) Set the signal generator to 800 kilocycles.

(i) Tune-in the 600 kilocycle signal with the station selector in the region of 80 on the dial (Band C), for maximum reading on the output meter.

(j) Adjust the Band C oscillator series trimmer (Illus. #31A, Fig. 2) while rocking the condenser gang plates back and forth slightly, until no further increase in output can be obtained.

(k) Repeat operations (d), (e) and (f) for more accurate adjustments.

4. Aligning R-F Circuits - Band B (1550-4500 K.C.)

(a) Turn the band selector switch to the second position from the left. (Band B)

(b) Set the signal generator to 4000 kilocycles.

(c) Rotate the station selector until the pointer points to 4.0. (Band B)

(d) Adjust the Band B "Osc." parallel trimmer, (Fig. 2), for maximum signal output.

(e) Adjust the Band B "R-F" parallel trimmer, (Fig. 2), for maximum signal output.

(f) Adjust the Band B "Ant." parallel trimmer,(Fig. 2),for maximum signal output.

(g) Repeat operations (d), (e) and (f).

(h) Set the signal generator to 1700 kilocycles.

(i) Tune-in the 1700 kilocycle signal with the station selector in the region of 1.7 on the dial (Band B), for maximum reading on the output meter.

(j) Adjust the Band B oscillator series trimmer (Illus. #30B, Fig. 2) while rocking the condenser gang plates back and forth slightly, until no further increase in output can be obtained.

(k) Repeat operations (d), (e) and (f) for more accurate adjustments.

5. Aligning R-F Circuits - Band A (5.800-15.300 K.C.)

(a) Replace the .00025 series condenser in the output lead from the signal generator with a 400 ohm, carbon resistor.

(b) Turn the band selector switch to the first position on the left. (Band A)

(c) Set the signal generator to 15 megacycles. (15,000 K.C.)

(d) Rotate the station selector until the pointer points to 15. (Band A)

(e) Adjust the Band A "Osc." parallel trimmer, (Fig. 2), for maximum signal output.

(f) Adjust the Band A "R-F" parallel trimmer, (Fig. 2), for maximum signal output.

(g) Adjust the Band A "Ant." parallel trimmer, (Fig. 2), for maximum signal output.

©John F. Rider, Publisher

UNITED MOTORS SERVICE

MODEL 4051,32 volts
Schematic
Voltage,Alignment

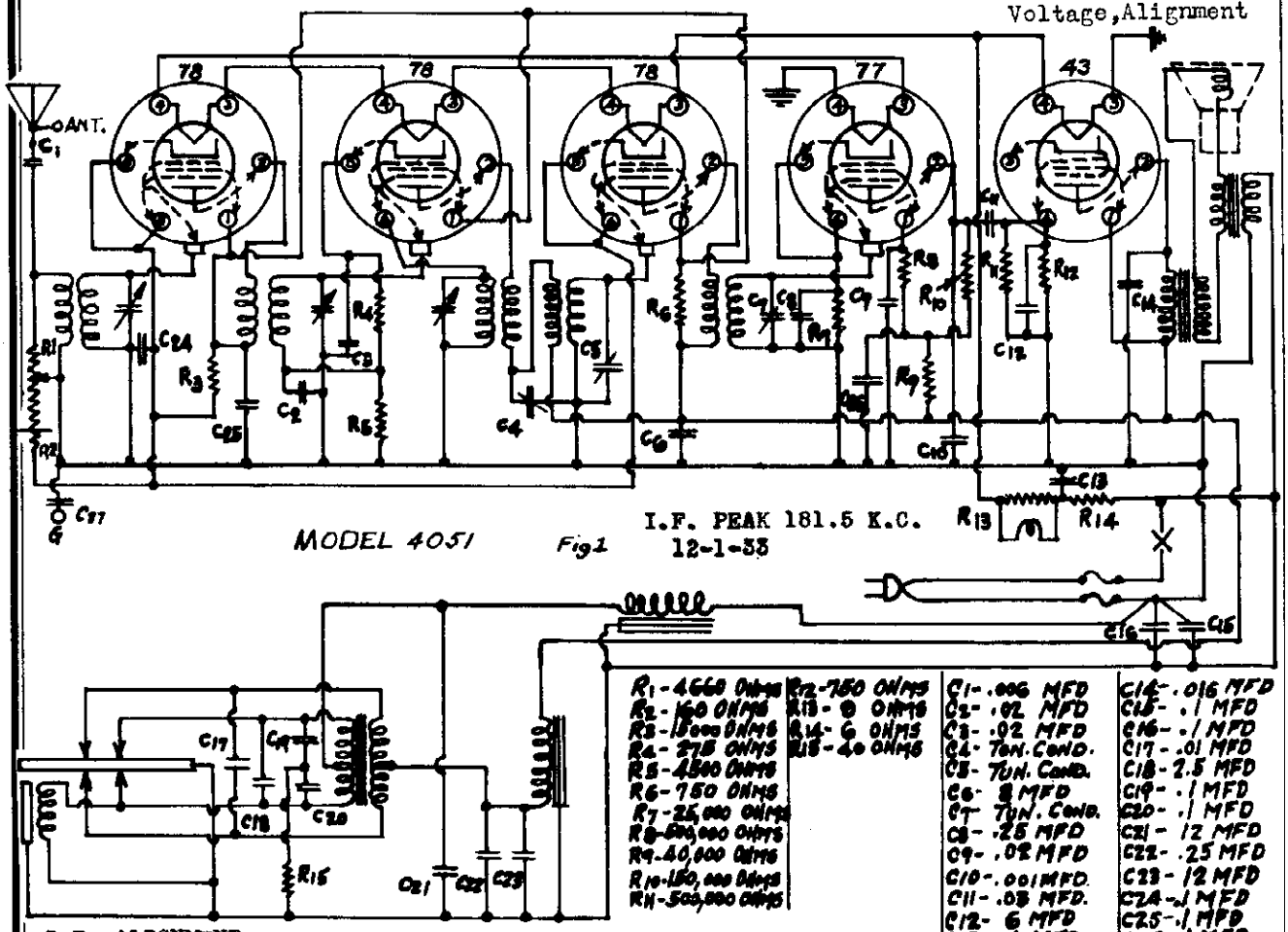

I.F. ALIGNMENT.

1. Connect the Oscillator to the grid cap of the 1st. Detector (78 Tube)
2. Set the Oscillator for 181.5 K.C.
3. Peak the I.F. trimmer condensers, peaking the secondary of the second I.F.Transformer first and working forward to the primary of the first I.F. Transformer.

R.F. ALIGNMENT.

1. Connect the Oscillator to the antenna and ground posts of the receiver.
2. Tune the receiver to 1400 K.C.;operate the Oscillator at 1400 K.C.
3. Peak the parallel trimmers on the tuning condenser; peak the oscillator section (small plates) first.

CAUTION.

Do NOT connect the chassis of the receiver to the chassis of the vibrator as they are 32 Volts apart electrically. Connecting the two chassis together will cause the fuses to blow.

VOLTAGE CHART

TUBE	Tube prong numbers. #1	#2	#3 & #4 Filament	#5	#6
78	135	135	6.4	5.0	5.0
78	135	154	6.4	35.0	.0
78	135	154	6.4	5.0	5.0
77	50	77	6.4	5.5	5.5
43	154	148	25.0	22.5	

NOTE:

All readings are taken from indicated tube socket prong to frame except filament voltages. Volume Control on full. Supply Voltage at 32 Volts. Any increase or decrease in the power supply will vary these readings proportionately.

MODEL 4052 AC-DC
Schematic

UNITED MOTORS SERVICE

Voltage, Alignment

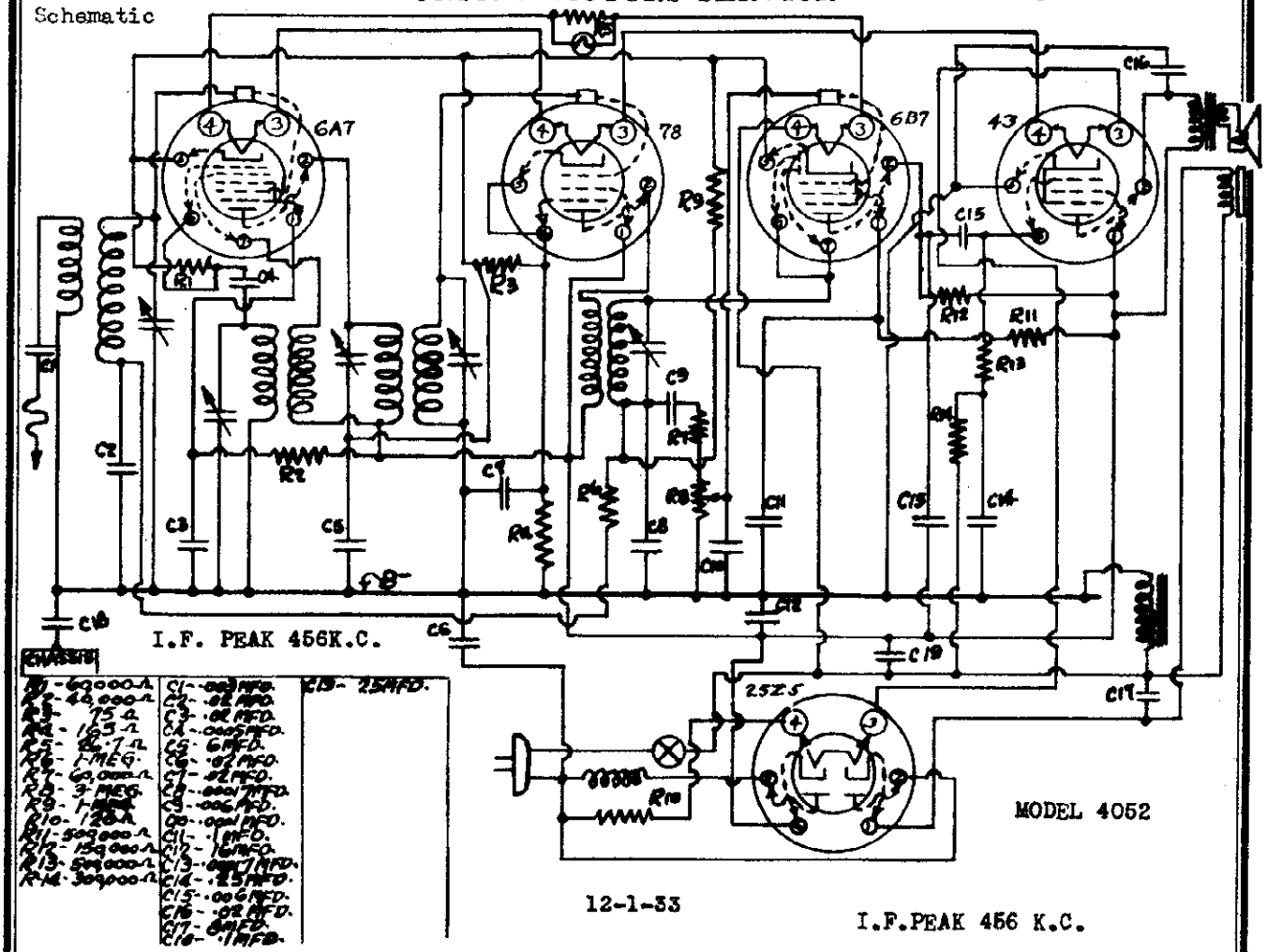

I.F. ALIGNMENT.
Peak the I.F. circuits of this receiver at 456 K.C. Use a fibre wrench for aligning the I.F. circuits, DO NOT attempt to use a metal wrench for this purpose.

R.F. & OSCILLATOR ALIGNMENT.
Peak the trimmer condensers on the tuning condenser at exactly 1400 K.C. Variation of this frequency will prevent tuning in both 550 and 1712 K.C. satisfactoily.

*NOTE:
The I.F. frequency of this receiver falls in the Government Coast Guard communications band. In certain locations code may be heard between stations over the entire dial as a nearby Coast Guard station may ride through on the I.F. circuits are repeaked at a slightly lower , or a slightly higher, frequency the code signal will be rejected by the I.F. circuits.

VOLTAGE CHART

"B" MINUS for this receiver will be found on the tuning condenser frame. All D.C. Voltages are measured between the indicated tube prong and the frame of the tuning condenser. The A.C. Voltages of the tube filaments are measured directly across the tube filament prongs with an A.C. meter.

TUBE	TUBE PRONG NUMBERS					
	#1	#2	#3 & #4(Fil)	#5	#6	#7
6A7	46	100	6.3	2.5	-.8	100
78	100	100	6.3	2.2	2.2	
6B7	12.5	13.5	6.3	1.0	.0	.0
43	100	92.5	25.0		-5.	
25Z5	-20	25.	-20.	100.		

©John F. Rider Publisher

MODEL 6010 Delco
Schematic

UNITED MOTORS SERVICE

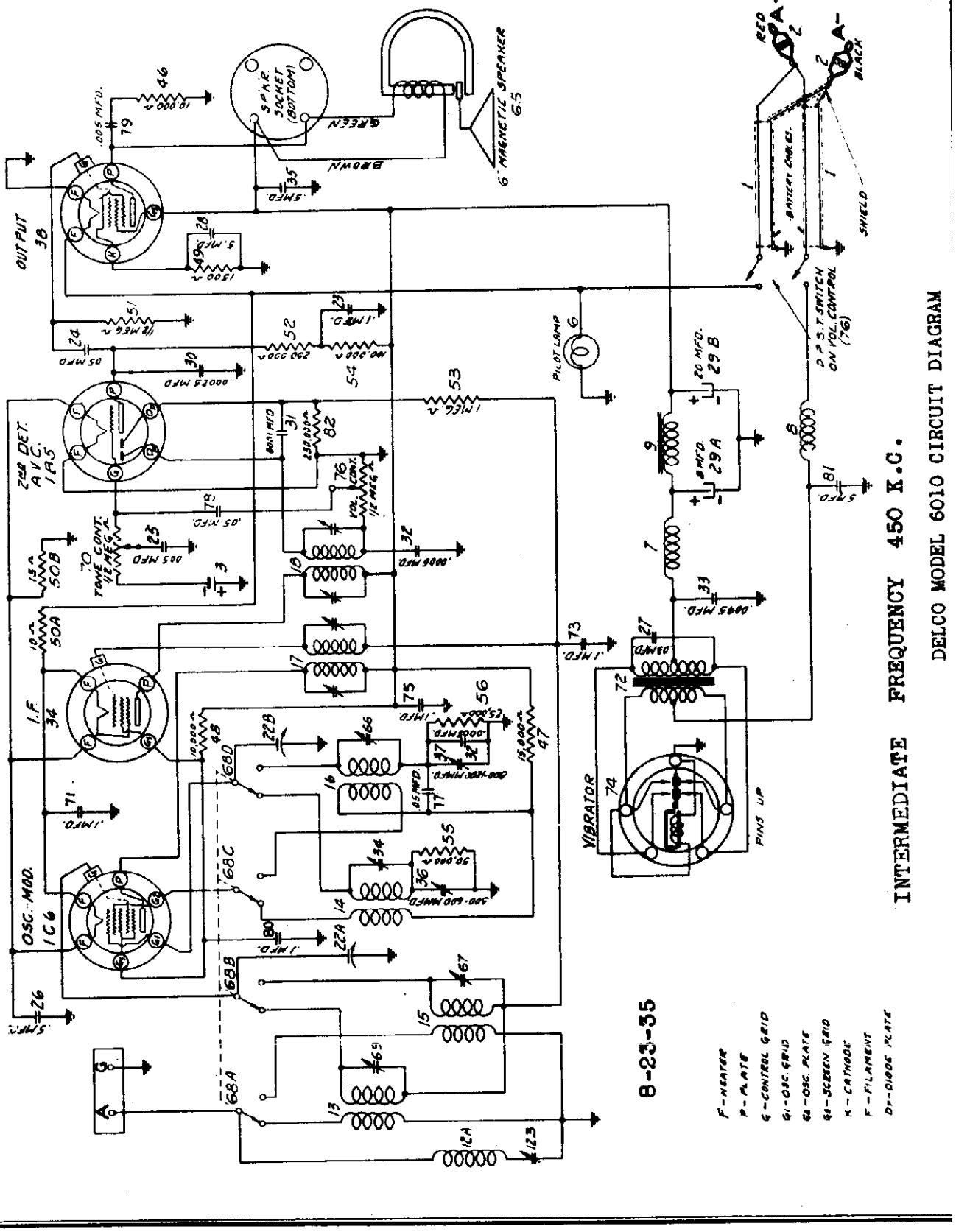

INTERMEDIATE FREQUENCY 450 K.C.

DELCO MODEL 6010 CIRCUIT DIAGRAM

8-23-35

©John F. Rider, Publisher

MODEL 6010 Delco
Socket, Trimmers
Chassis

UNITED MOTORS SERVICE

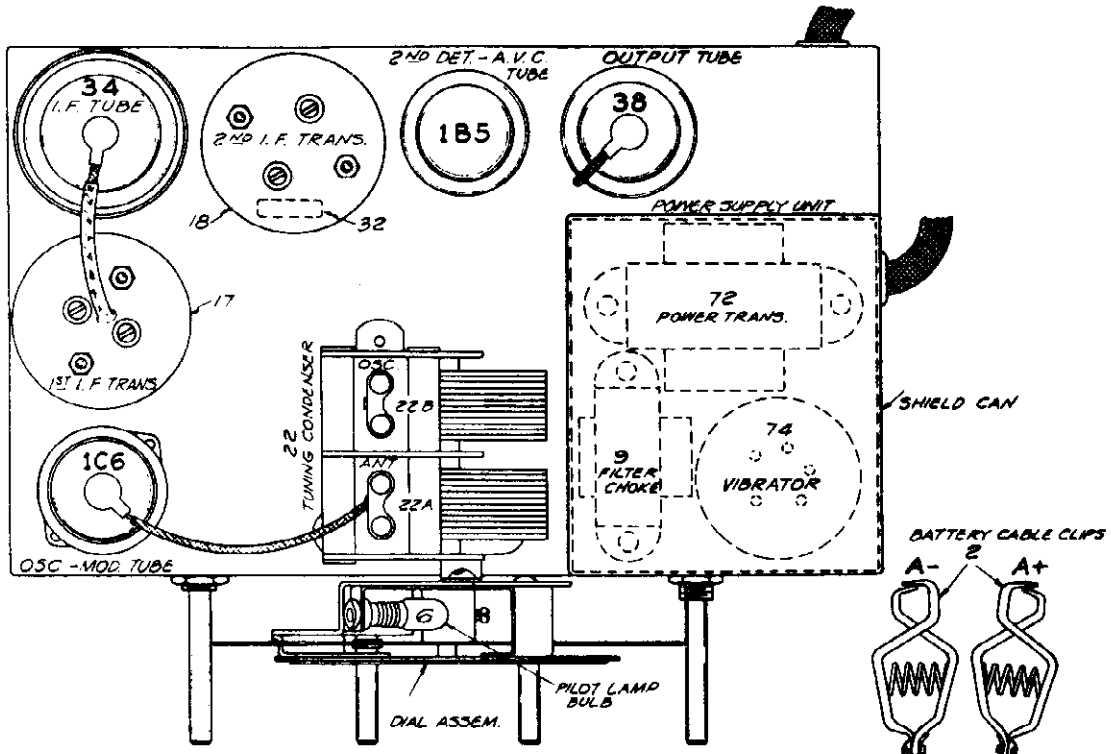

PARTS LAYOUT-Top View

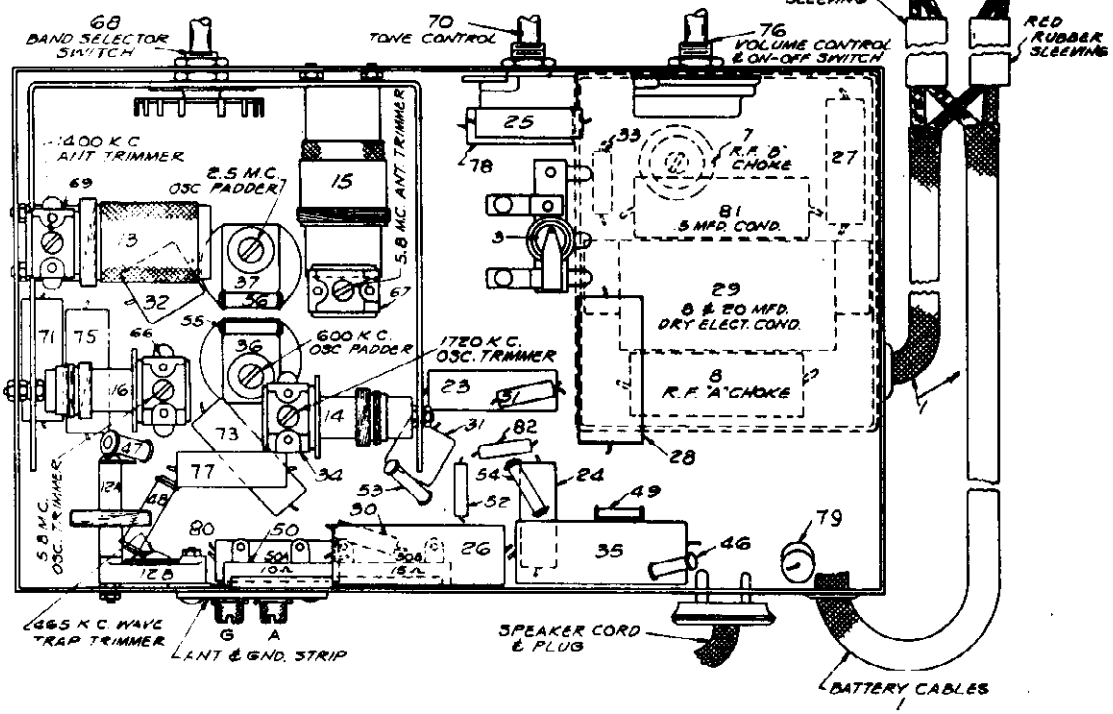

PARTS LAYOUT--Bottom View

©John F. Rider, Publisher

©John F. Rider, Publisher

GENERAL: The Delco Model 6010 is a 5 tube, 6 volt battery operated receiver with A.V.C. The type tubes used are: 1C6 Oscillator-Modulator, 34 I-F Amplifier, 1B5 Detector, A.V.C., and 1st A-F Amplifier and a type 38 Output tube.

The frequency range is from 540 to 1720 kilocycles on the Broadcast Band and from 2300 to 6200 kilocycles on the Short Wave Band.

CIRCUIT ALIGNMENT

All of the adjustable condensers are very accurately adjusted at the factory and should need no further adjustment unless tampered with in the field or a defective coil has been replaced. If realignment is found necessary, the circuits can be properly adjusted only with the use of a calibrated test oscillator or signal generator and an output meter.

1. Peaking I-F Stages at 465 Kilocycles

   (a) Connect the ground lead of the test oscillator to the chassis frame. Connect the other lead to the grid cap of the 1C6 tube through a .02 mfd. series condenser. DO NOT REMOVE THE GRID CLIP.

   (b) Set the test oscillator to exactly 465 kilocycles.

   (c) Turn the volume control of the receiver on full.

   (d) Peak each of the trimmers on the 2nd I-F coil., Illus. #18 on Fig. 2.

   (e) Peak each of the trimmers on the 1st I-F coil., Illus. #17 on Fig. 2.

   (f) In order to insure accurate settings of the I-F trimmers, the above adjustments should be repeated using the lowest test oscillator output that will give a reasonable output meter scale deflection.

2. Aligning R-F Circuits -- Broadcast Band (540-1720 K.C.)

   (a) Remove the test oscillator lead from the grid of the 1C6 tube and connect it to the receiver antenna terminal through a .00025 mfd. series condenser.

   (b) Check to see the tuning dial has not slipped on the condenser gang shaft by turning the rotor plates of the condenser gang until they are completely out of mesh, at which point the dial pointer should be at the high frequency end of the dial calibration.

   (c) Turn the band selector switch to the right for operation on the Broadcast Band (540-1720 K.C.)

   (d) Set the test oscillator frequency to exactly 1720 K.C.

   (e) Turn the gang condenser until the plates are completely out of mesh.

   (f) Adjust the broadcast padding condenser for the oscillator section of the condenser gang, shown as Illus. #34 on Fig. 3, to bring in the 1720 kilocycle signal from the test oscillator with maximum output.

   (g) Set the test oscillator frequency and the receiver dial to exactly 1400 kilocycles.

   (h) Adjust the broadcast padding condenser, Illus. #59 Fig. 3, for the antenna section of the condenser gang for maximum output.

   (i) Set test oscillator on 600 kilocycles.

2. Aligning R-F Circuits--Broadcast Band (540-1720 K.C.)--Cont'd.

   (j) Set receiver dial at approximately 600 kilocycles, leaving the test oscillator connected to the ANT and GND terminal of the receiver and the band change switch in the Broadcast position.

   (k) Adjust the oscillator tracking condenser Illus. #36 Fig. 3, rocking the tuning condenser gang back and forth until no further increase in output can be obtained.

3. Aligning R-F Circuits--Short Wave Band (2.3 to 6.2 meg.)

   (a) Leave test oscillator connected to ANT and GND of receiver and turn the band selector switch to the left for operation on the Short Wave Band.

   (b) Set test oscillator frequency and receiver dial to exactly 5.8 megacycles.

   (c) Adjust the short wave padding condenser, Illus. #66 Fig. 3, for the oscillator section of the condenser gang until the 5.8 megacycle signal from the test oscillator is tuned in with maximum output.

   (d) Adjust the short wave padding condenser, Illus. #67 Fig. 3 for maximum output.

   (e) Turn the receiver dial and set test oscillator to approximately 2.5 megacycles.

   (f) Adjust the Oscillator tracking condenser, Illus. #37 Fig. 3, rocking the tuning condenser gang back and forth until no further improvement in output can be obtained.

4. Adjustment of 465 K.C. Wave Trap

Some code and aircraft signals are broadcast on a frequency exactly the same or near the I.F. frequency of the receiver. To eliminate interference from these signals, a 465 K.C. antenna filter is incorporated in the set. To adjust:

(a) Leave test oscillator output leads connected to the set ANT and GND.

(b) Set the test oscillator frequency to exactly 465 K.C. and adjust the 465 K.C. wave trap trimmer, Illus. #12B Fig. 3 for MINIMUM 465 K.C. SIGNAL RESPONSE.

*TUBE SOCKET VOLTAGES

Tube	Function	F	P	G2	G2	G1	K
1C6	Osc.-Mod.	2.1	135	85	-2.8	100	-
34	I-F Amp.	2.1	135	85	-	-	-
1B5	Det.,1st A-F	2.1	50	-	-	--	-
38	Output	6.0	130	135	-	-	13

*Readings taken from tube socket contacts to ground (except filaments) with a meter having a resistance of 1000 ohms per volt.

MODEL 405046 Oldsmobile
544268 Pontiac
Schematic

UNITED MOTORS SERVICE

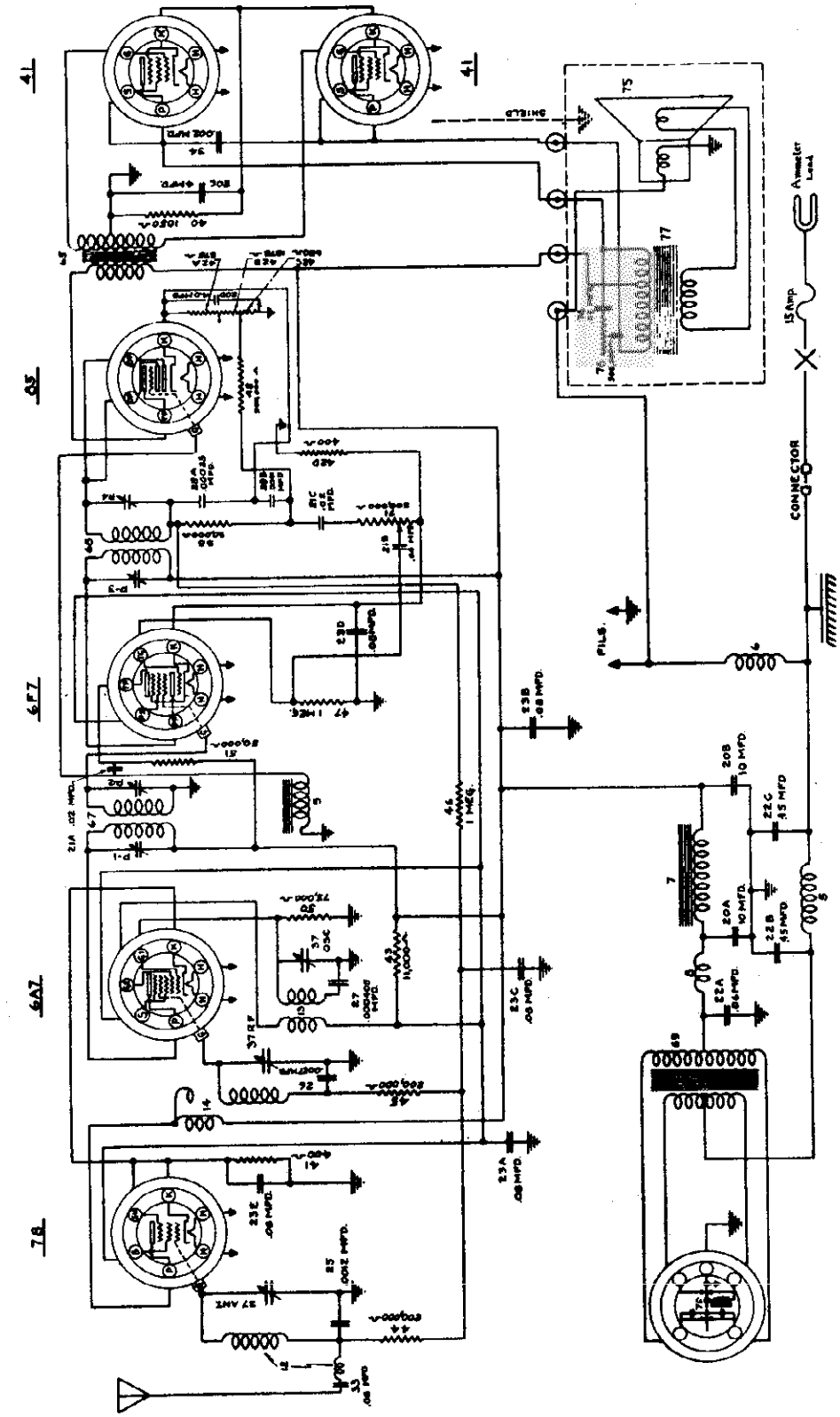

INTERMEDIATE FREQUENCY 262 K.C.
1-31-35

CIRCUIT DIAGRAM--Pontiac Model #544268, Olds Model 405045
Note: These receivers are all above Serial #1791090.

©John F. Rider, Publisher

MODEL 405046 Oldsmobile
544268 Pontiac

UNITED MOTORS SERVICE

Socket, Trimmers, Chassis

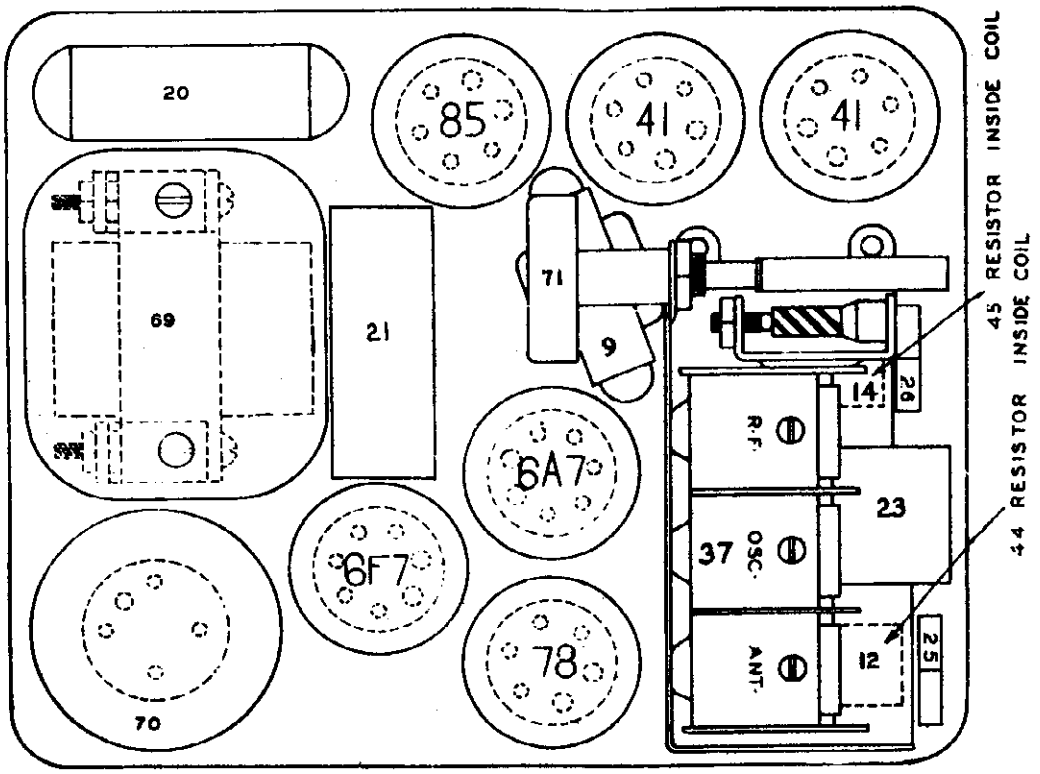

PARTS LAYOUT--Top View

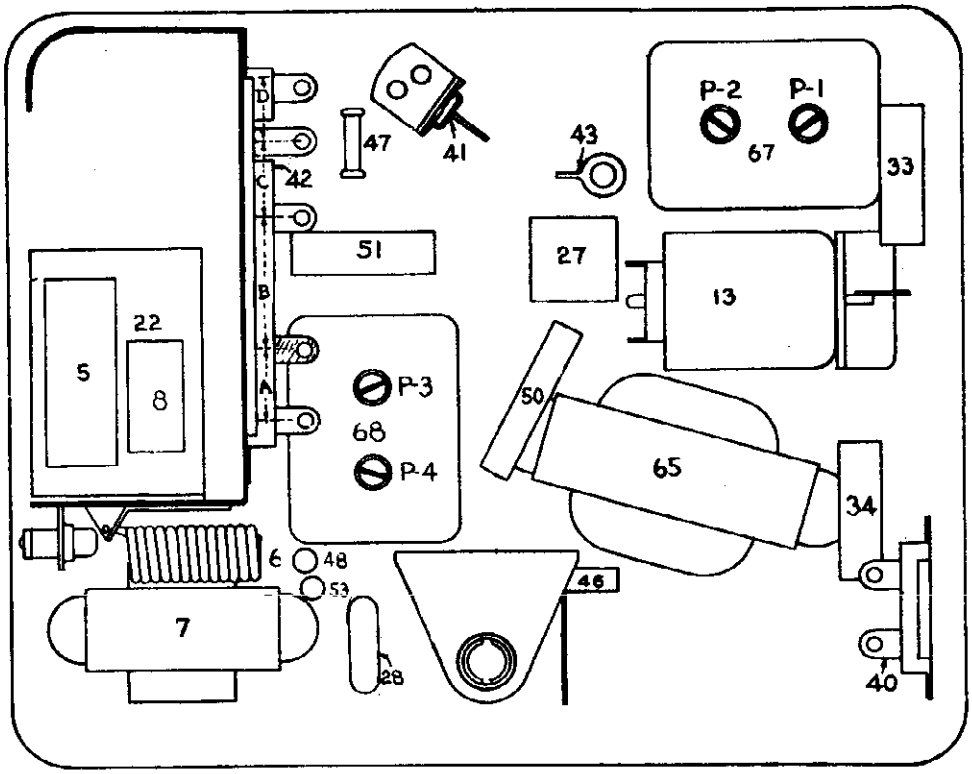

PARTS LAYOUT--Bottom view

©John F. Rider, Publisher

PEAKING PROCEDURE

Peaking I.F. Stages at 262 K.C.

(a) Connect the ground lead of the test oscillator to the chassis frame. Connect a .5 mfd. condenser in series with the other lead and connect this lead to the grid cap of the 6A7 tube, leaving the grid clip in place. The .5 mfd. condenser is necessary to prevent the oscillator circuit of the receiver from affecting the I.F. adjustments.

(b) Set the test oscillator on 262 kilocycles.

(c) Turn the volume control of the receiver on full.

(d) Peak the I.F. trimmer P-4 and P-3 located on the 2nd I.F. coil shown on Figure 3.

(e) Then peak trimmers P-2 and P-1 located on the first I.F. coil also shown on Figure 3.

(f) In order to insure accurate settings of the I.F. trimmers the above adjustments should be repeated using the lowest oscillator output that will give a reasonable deflection of the output meter pointer. Make all adjustments for maximum output.

Peaking Gang Condenser at 1530 and 1400 K.C.

(a) Connect the output of the test oscillator to the antenna connection of the receiver and to the chassis ground. Do not use the .5 mfd. condenser that was required in aligning the I.F. stages.

(b) Turn the rotor plates of the gang condenser until they are COMPLETELY OUT OF MESH.

(c) Set the test oscillator on 1530 kilocycles.

(d) Adjust the trimmer condenser for the oscillator section (middle section) of the gang condenser CAREFULLY for maximum output. Then adjust the trimmers for the "R.F." and "ANT" sections of the gang condenser. (See Fig. 2)

(e) Set the test oscillator on 1400 kilocycles.

(f) Turn the condenser rotor plates until the 1400 K.C. signal from the test oscillator is tuned in with maximum output. (No calibration blocks should be used as the oscillator circuit is adjusted at 1530 K.C. on this set.)

Peaking Gang Condenser at 1530 and 1400 K.C.--Cont'd.

(g) Readjust the parallel trimmers for the "R.F." and "ANT" sections of the gang condenser for maximum output. DO NOT disturb the oscillator trimmer (middle section) as this is adjusted at 1530 K.C. only, and any further adjustments at this point will affect both the tuning range of the receiver and the tracking of its circuits.

(h) The capacity of the output circuit of the test oscillator may be slightly different than that of the under car antenna the receiver is to be used on. Therefore, it is advisable to readjust the "ANT" trimmer to the car antenna when reinstalling the receiver. This may be done by tuning the receiver to a broadcast station around 1400 K.C. and adjusting for maximum volume.

CIRCUIT CHANGES

A number of .05 mfd. tubular condensers were used at the factory in place of the .06 mfd. condenser part #1209213 condenser shown on figure 2 as illustration #33. For Service Replacement purposes of any defective .05 mfd. condensers--use part #1209213 condenser.

VOLTAGE CHART

The voltages shown below are average readings taken from the tube socket contacts to the chassis frame, and will vary ±10% when the set is tested on a 6 volt battery due to differences in characteristics of vibrators and tubes.

TUBE BASE DIAGRAM SYMBOLS*

Type	Function	H	Pp	S	Tp	Gt	G	G1	G2	K
78	R.F.	6	240	130	-	-	0	-	-	8.0
6A7	Det-Osc.	6	240	130	-	-	0	0	130	8.0
6F7	I.F.-A.F.	6	240	130	115	0	0	-	-	4.5
85	Det-2nd AF	6	-	-	235	0	0	-	-	16.5
41	Output	6	240	235	-	-	-	-	-	23.0
41	Output	6	240	235	-	-	-	-	-	23.0

NOTE: Ampere drain of set at 6 volts is 6.7 amperes
Milliampere drain from "B" supply is approximately 57 M.A

©John F. Rider, Publisher

UNITED MOTORS SERVICE

MODEL 600153 Chevrolet
Schematic

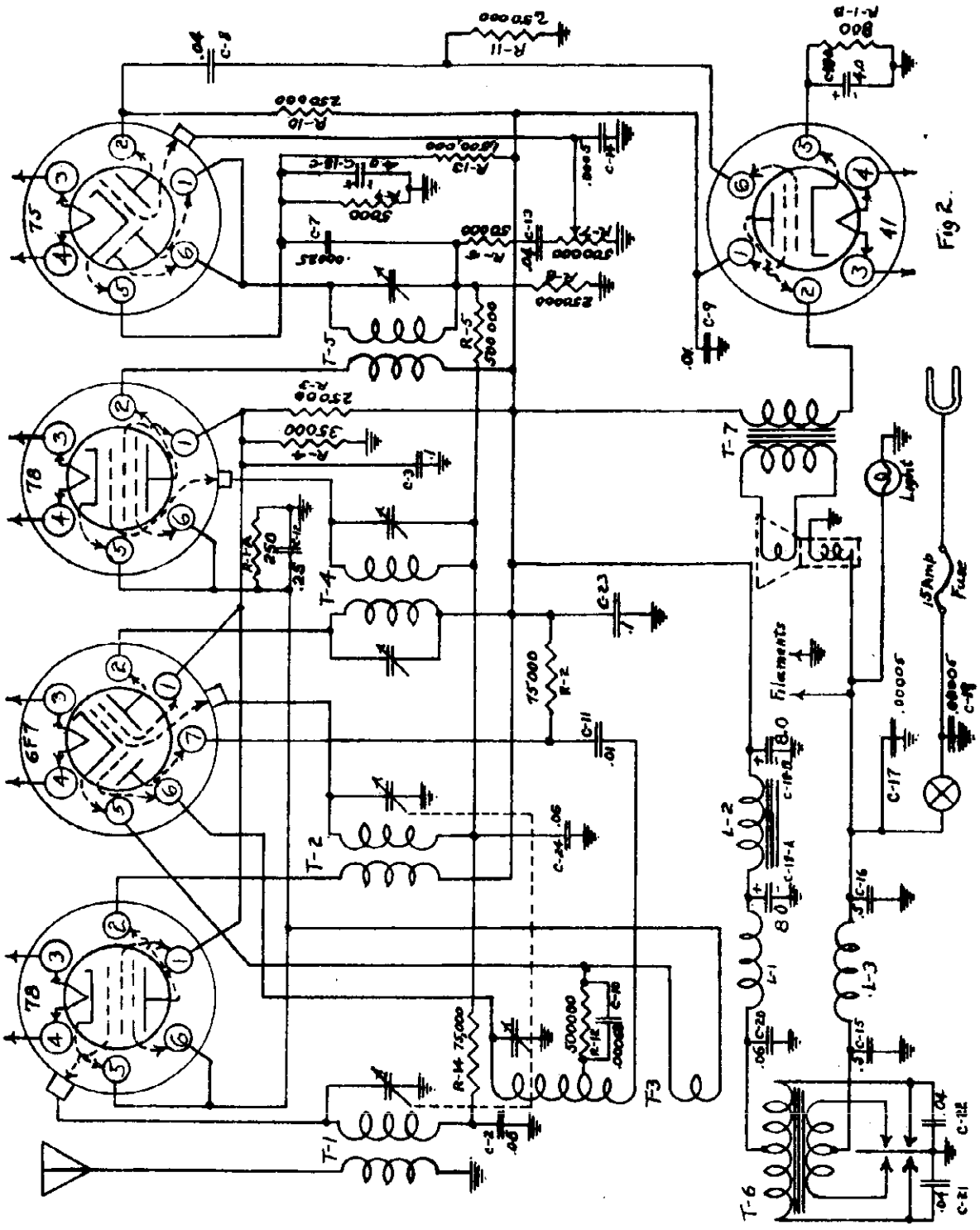

Fig. 2.

Fig. 2 CHEV. 600153 CIRCUIT DIAGRAM

©John F. Rider, Publisher

VOLTAGE CHART

Note: All readings taken from indicated tube prong to chassis frame. Volume control on full.

Tube	#1 Screen	#2 Plate	#3 Fil	#4 Fil	#5 Cathode	#6 Grid	#7 Triode Plate
78 R.F.	88	215	6	0	3.4	3.4	
6F7 (Det							
(Osc.	88	215	0	6	3.4	-.8	88
78 I.F.	88	215	6	0	3.4	3.4	
75 (2nd Det.							
(AVC	0	90	0	6	1.5	0	
41 A.F.	215	210	6	0	16.3	0	

PEAKING

All of the adjustable condensers, commonly called "trimmer" condensers, are very accurately adjusted at the factory and will not need any further adjustment unless a coil or I.F. transformer is changed or the adjustments are tampered with in the field.
DO NOT attempt to change the setting of any of the trimmer condensers unless it is definitely known that the adjustment is necessary. If re-alignment is found necessary a test oscillator, fibre screw driver and output meter will be necessary to accurately align the circuits.

PEAKING I.F. STAGES AT 262 K.C.

The only way the I.F. stages can be peaked properly is with the use of an oscillator and output meter. Connect the output meter to the plate prong of the 41 output tube and to the chassis frame. Make sure that the output meter is protected with a series condenser internally, if not, connect a 1/10 mfd. condenser in series with the ground lead to the chassis. The Dayrad #875 Universal Test Meter and Series #51 Volt-Ohmeter have this protective condenser included in them.

(a) Connect the output of the oscillator to the grid cap of the 6F7 tube (leave grid cap in place) and to the chassis ground.

(b) Turn the condenser gang until the plates are entirely out of mesh.

(c) Set the oscillator on 262 K.C. and feed this signal through the I.F. stages of the set.

(d) Peak the I.F. trimmer which is in the I.F. coil having only one adjusting screw first. Then peak the two condensers of the 2nd I.F. coil.

(e) Set the oscillator output at the lowest level that will give a reasonable scale deflection on the output meter. This should be less than half the maximum output available.

(f) Make all trimmer adjustments for maximum deflection on the output meter scale.

PEAKING GANG CONDENSER AT 1400 K.C.

(a) Connect the output of the oscillator to the antenna connection of the set and to the chassis ground.

(b) In order that the position of the condenser plates for 1400 K.C. may be accurately determined, a wood calibration block (painted red, part number 1208073) should be used. This block may be used also in peaking all of the U.M.S., B-O-P, and Chevrolet radios that use the "tubeless rectifier".

(c) Insert the RED block under the middle section of the gang condenser, so that the largest flat side rests on the chassis base and the square notch stops solidly against the stationary plate support bracket.

(d) Open the condenser plates until they stop solidly against the beveled edge of the block as shown in Fig. (1).

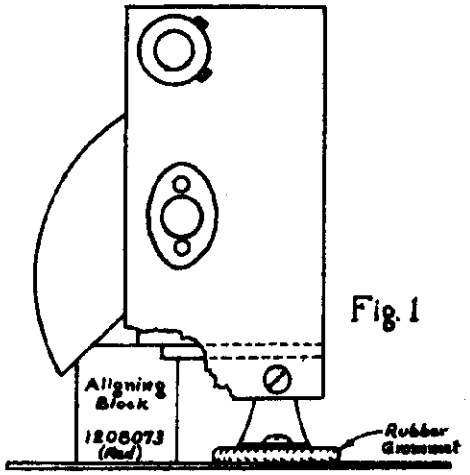

Fig. 1

(e) Peak the parallel trimmers on top of the condenser gang, the oscillator section first at 1400 K.C. for maximum deflection on the output meter.

(f) To insure sharp peaking of all trimmers reduce the oscillator output to the lowest level that will give a reasonable deflection on the output meter scale.

NOTE: Always use the red calibration block when aligning the parallel trimmers on the gang condenser. Do not rely on the logging of the dial to determine the 1400 K.C. setting. When the aligning procedure is completed, the logging of the dial may be slightly off and should be re-set.

©John F. Rider, Publisher

MODEL 802
MODEL 803
MODEL 5010
MODEL 5032
Schematics
Socket

UNIVERSAL BATTERY CO.

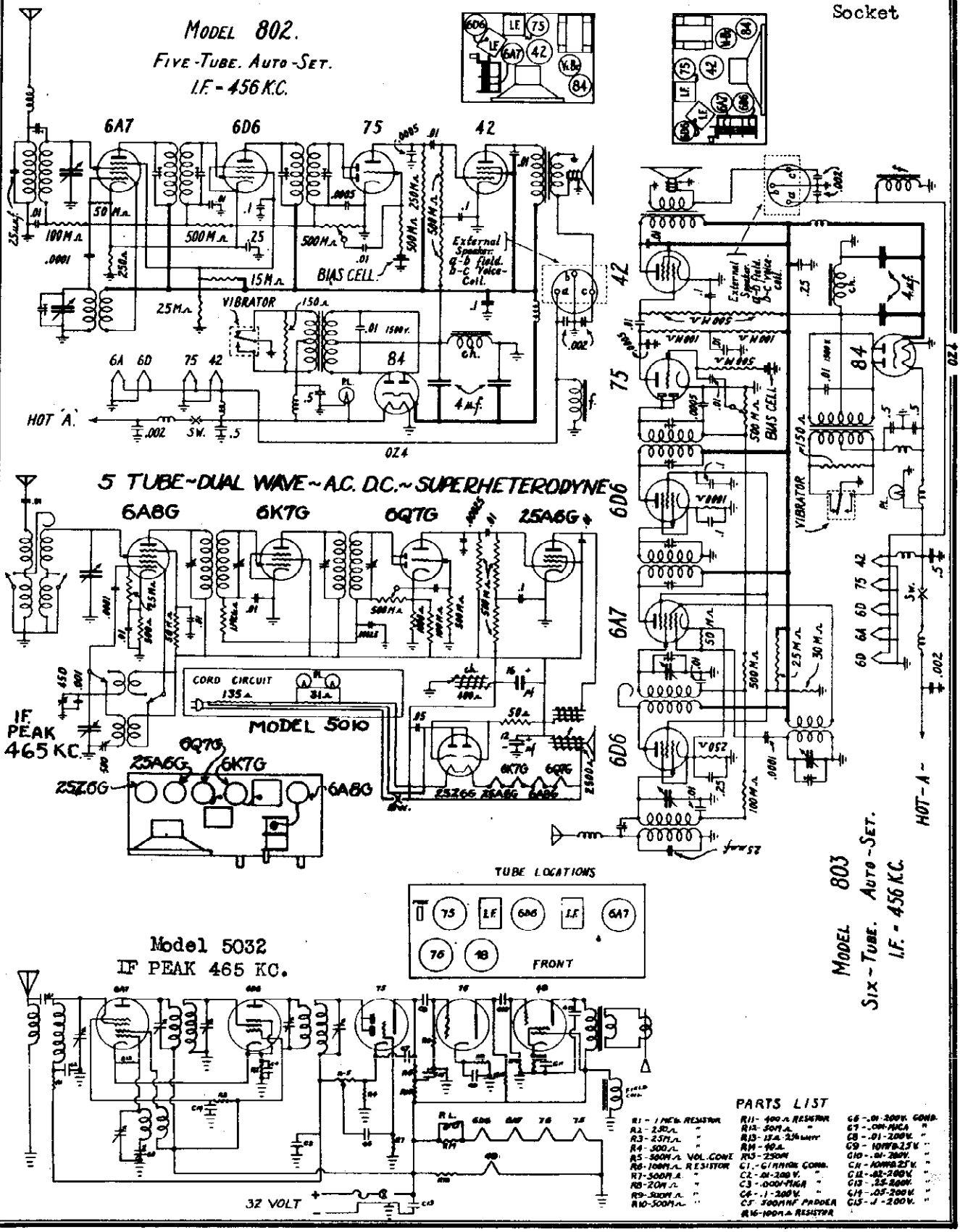

©John F. Rider, Publisher

MODELS 6110,6310
MODEL 7332
MODELS 8210,8410
Schematics,Socket

UNIVERSAL BATTERY CO.

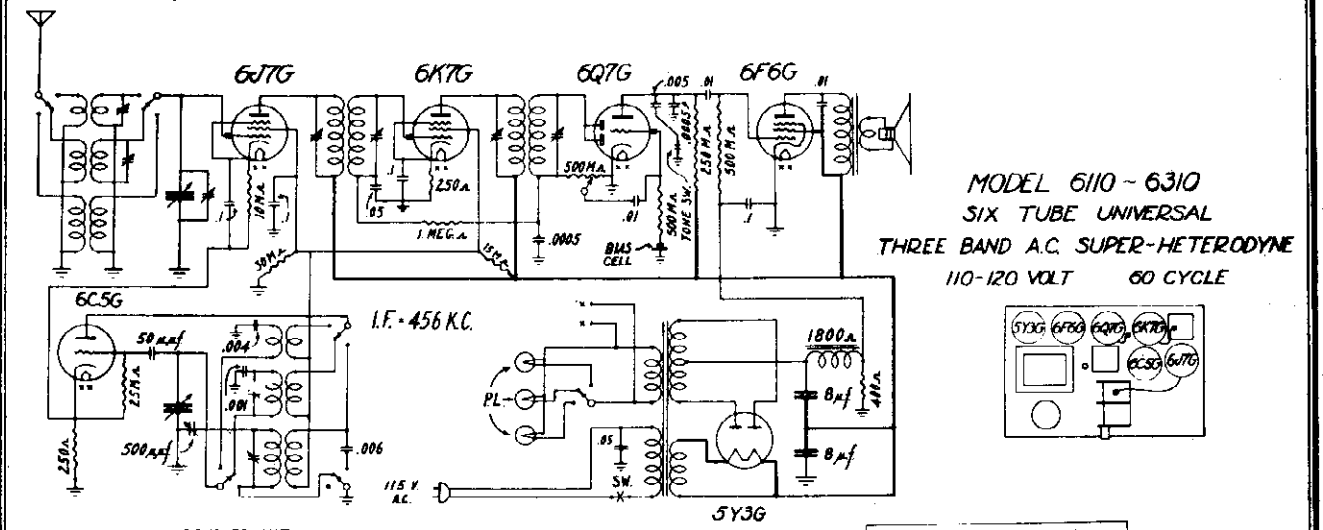

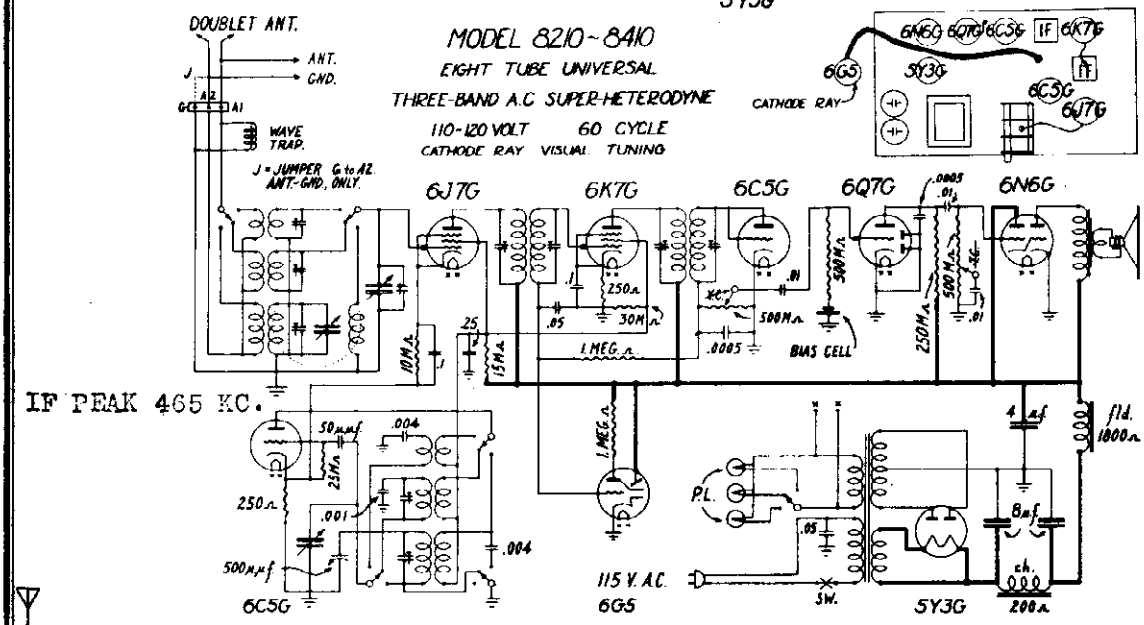

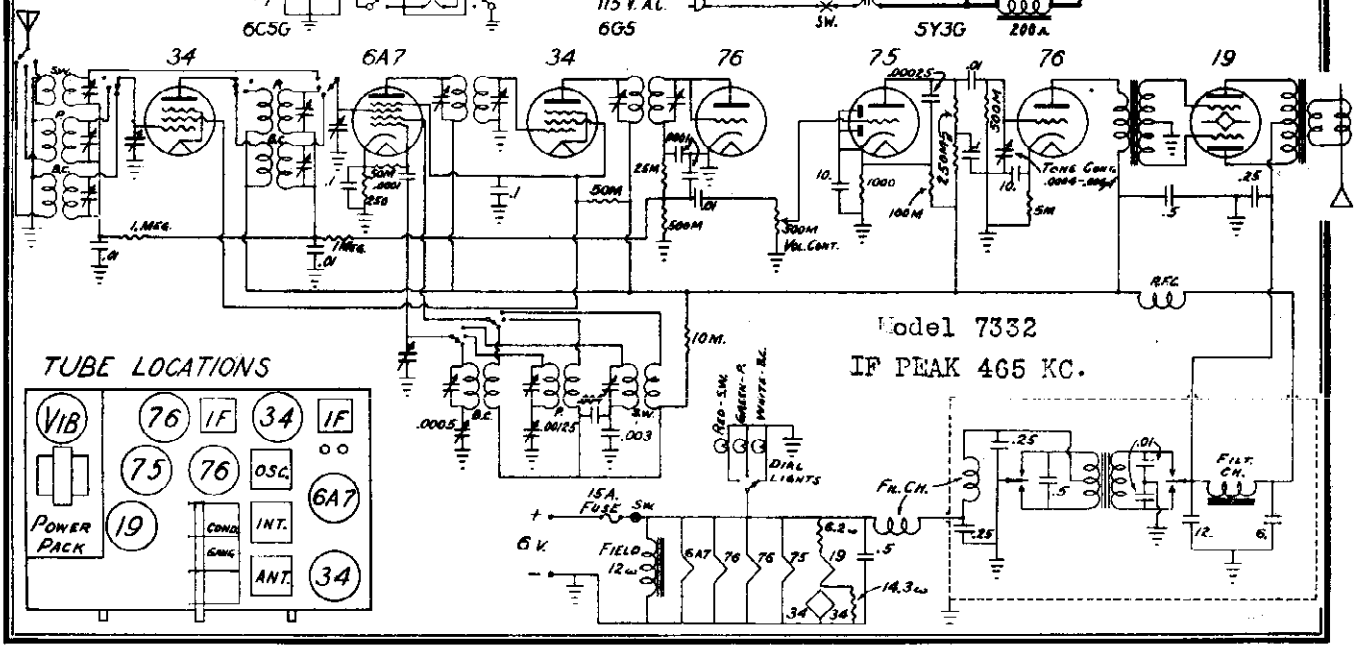

©John F. Rider, Publisher

WARWICK MFG. CO.

MODEL 5-Tube Auto
Schematic, Alignmen

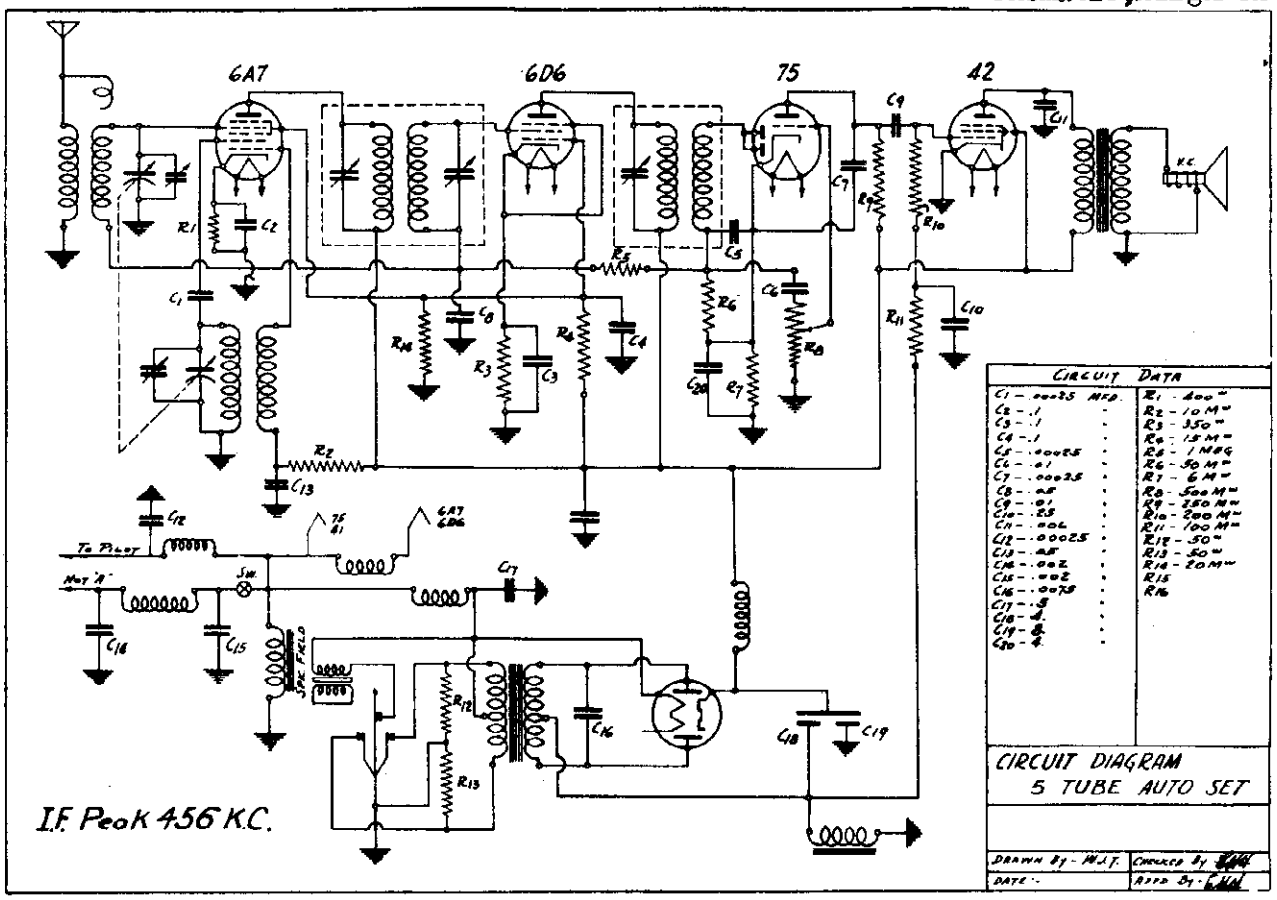

I. F. ALIGNMENT:

With volume control turned on full and variable gang condenser at maximum capacity, attach test oscillator lead in series with a .1 mfd. condenser to grid of 6A7 tube. Set test oscillator 456 KC and adjust I.F. trimmers for maximum output as indicated on an output meter connected across voice coil of speaker or from plate and screen of 41 tube.

R. F. ALIGNMENT:

Set test oscillator at 1500 KC and connect to antenna of receiver through a 150 mmf. condenser. Rotate variable gang condenser to minimum capacity and back off slightly. Adjust trimmer on oscillator section of gang condenser (first section from shaft end) to resonance indicated by maximum output. Re-set test oscillator at 1400 KC and rotate variable condenser until oscillator signal is picked up. Adjust antenna (rear section) to resonance. Check alignment at 1400, 1000, 600 and 550 kilocycles by setting test oscillator to these frequencies and rotate condenser until signal is picked up. Off tracking at 1000 and 600 kilocycles may be compensated for by slightly bending the slotted plates of the antenna section of gang condenser. DO NOT BEND PLATES OF OSCILLATOR SECTION.

DIAL ADJUSTMENT

To correctly adjust dial pointer, tune the set to a station of known frequency or turn selector knob to end of tuning range in either direction and adjust slotted shaft in back of remote head until dial pointer reaches correct frequency setting. The dial is calibrated in kilocycles. Add one cipher to dial reading to determine frequency of station tuned.

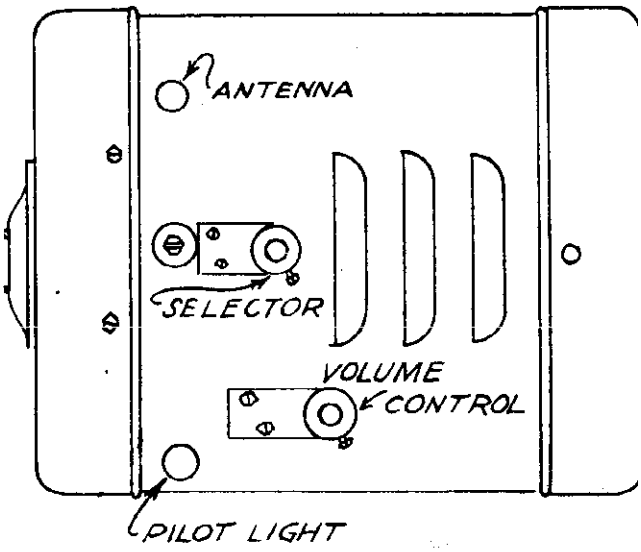

©John F. Rider, Publisher

MODEL 6-Tube Auto
Schematic, Alignment

WARWICK MFG. CO.

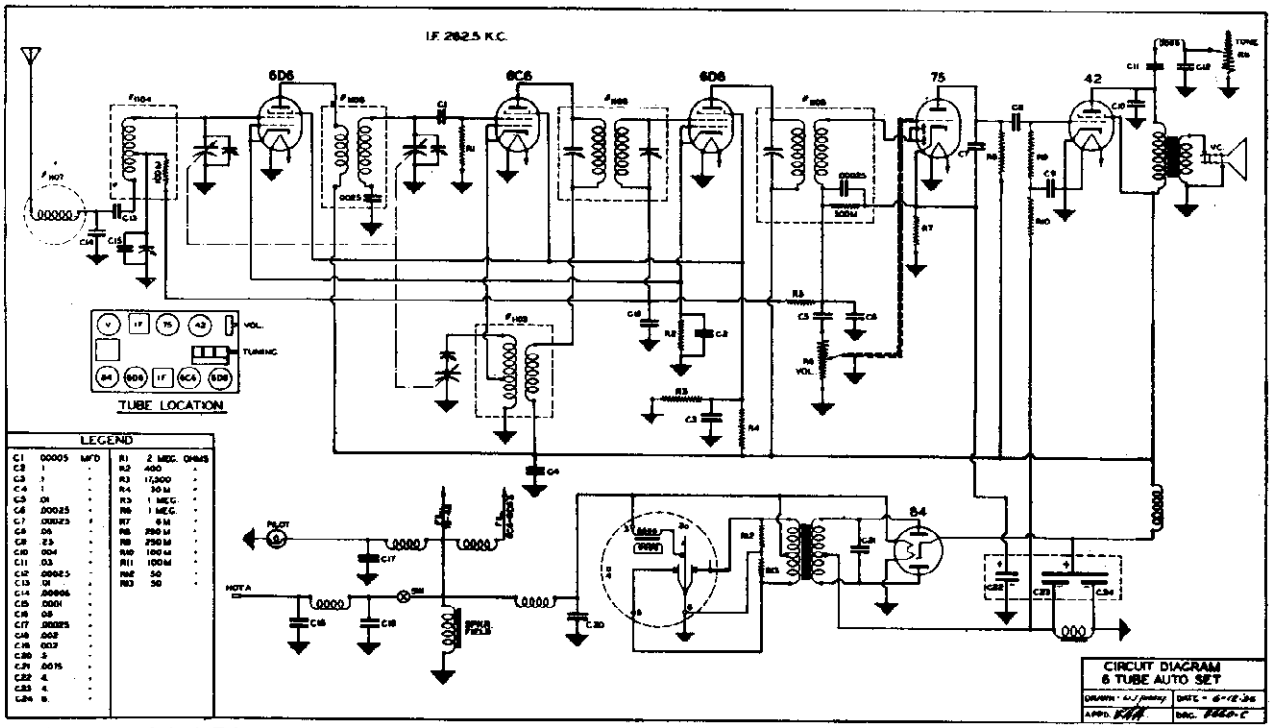

I. F. ALIGNMENT:

With volume control on full and variable gang condenser at maximum capacity, attach test oscillator lead in series with a .1 mfd. condenser to stator of R. F. section of gang condenser (center section). Set test oscillator at 262.5 KC and adjust I.F. trimmers for maximum output as indicated on an output meter connected across voice coil of speakers or from plate and screen of 42 tube.

Set test oscillator to 600 KC and adjust oscillator padding (located on bakelite strip, 2nd from front). Also adjust 600 KC antenna padding condenser (located on bakelite strip, 1st condenser) Reset test oscillator to 1400 KC and readjust antenna and R. F. trimmers.

R. F. ALIGNMENT:

Set test oscillator at 1550 KC and connect through a 150 mmf. condenser to antenna of reciever. Rotate variable gang condenser to minimum capacity and back off slightly. Adjust trimmer on oscillator section of gang condenser (third section from shaft end) to resonance indicated by maximum output. Re-set test oscillator of 1400 KC and rotate variable condenser until oscillator signal is picked up. Adjust antenna trimmer (front section) and R. F. trimmer (center section) to resonance.

DIAL ADJUSTMENT:

To correctly adjust dial pointer, tune set to a station of known frequency or turn selector knob to end of tuning range in either direction and adjust slotted shaft in back of remote head until dial pointer reaches correct frequency setting. The dial is calibrated in kilocycles. Add one cipher to dial reading to determine frequency at station tuned.

ANTENNA ADJUSTMENT:

When set is in operation, tune to a station on or about 1400 KC and adjust antenna trimmer to maximum volume. This trimmer is accessable by removing the plug button on the front cover of the receiver.

Proper adjustment of this trimmer matches the particular antenna used in the auto to the receiver which increases the sensitivity of the receiver.

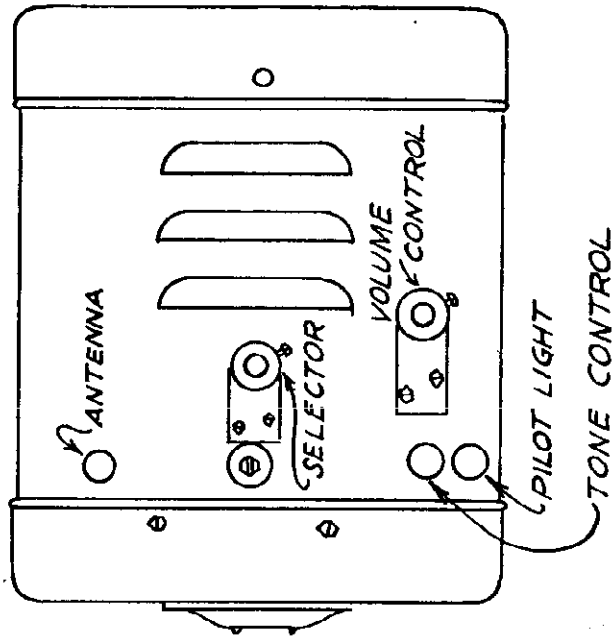

©John F. Rider, Publisher

WARWICK MFG. CO.

MODELS 419,420
MODEL 520
MODEL 7-Tube Batt.
Schematics,Socket

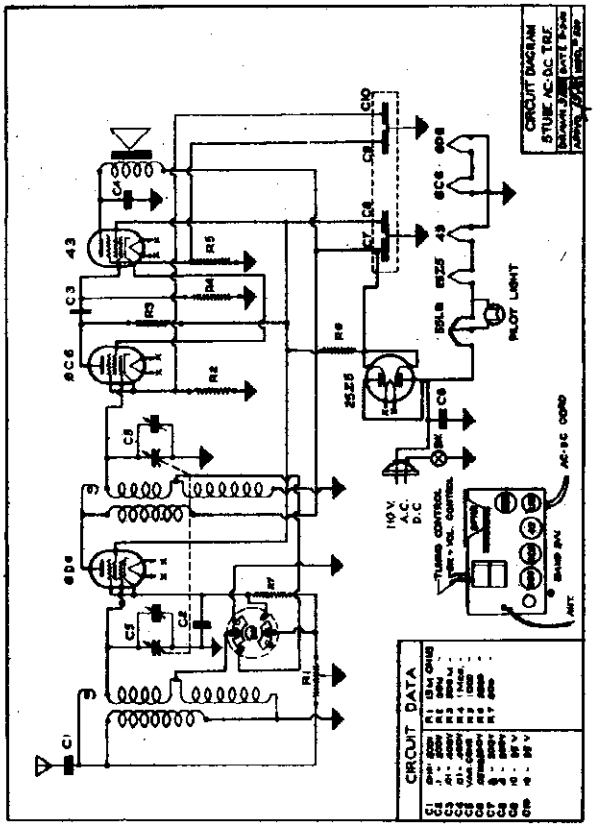

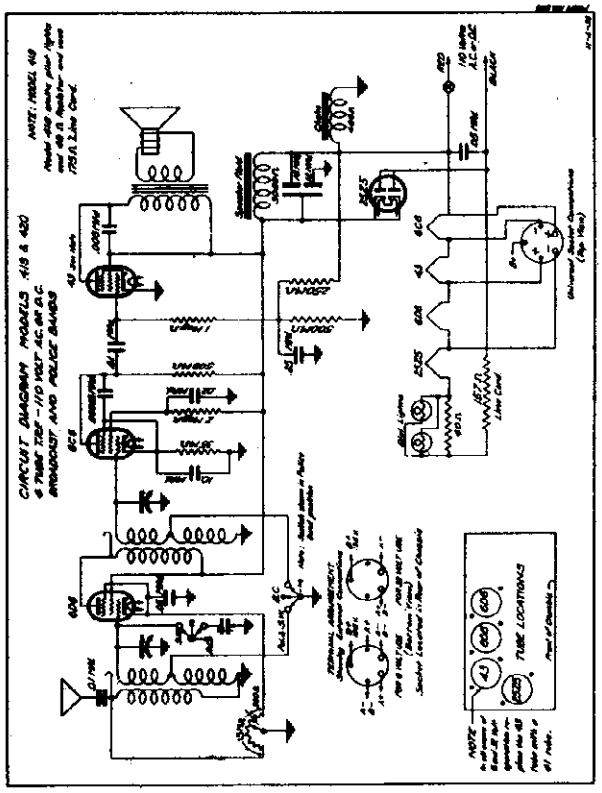

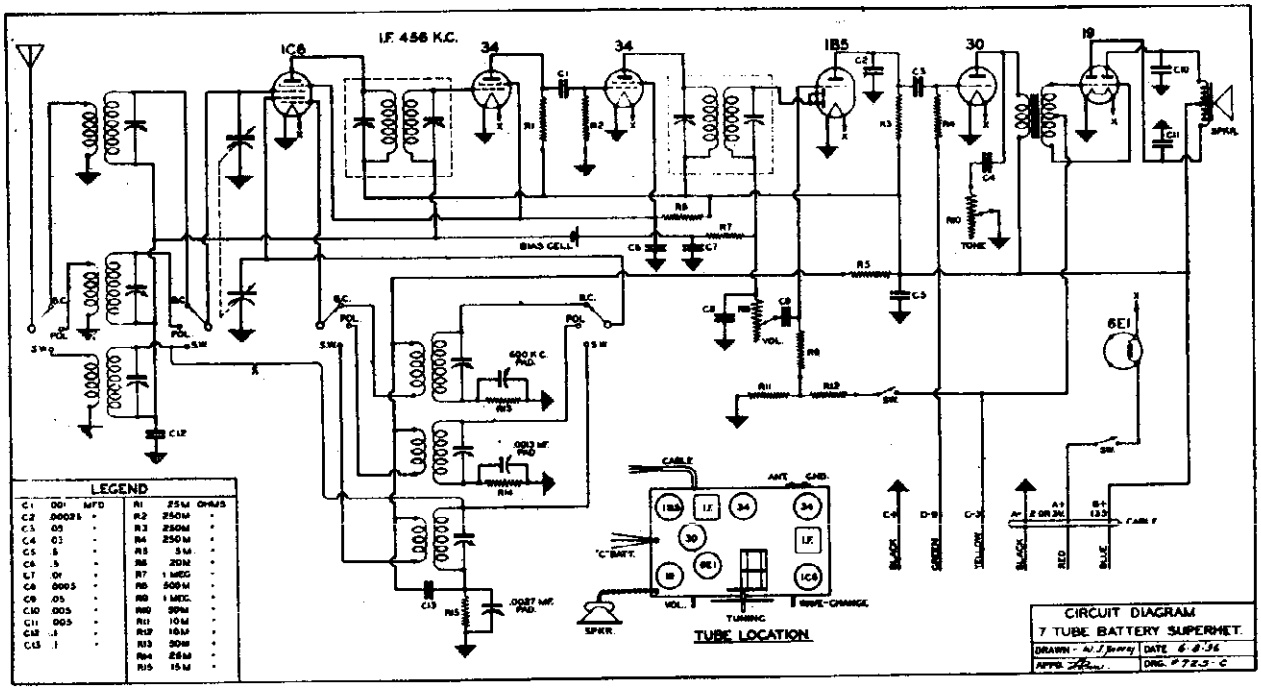

©John F. Rider, Publisher

MODEL 530
MODEL 542
MODEL 4-Tube AC

WARWICK MFG. CO.

Schematics, Socket

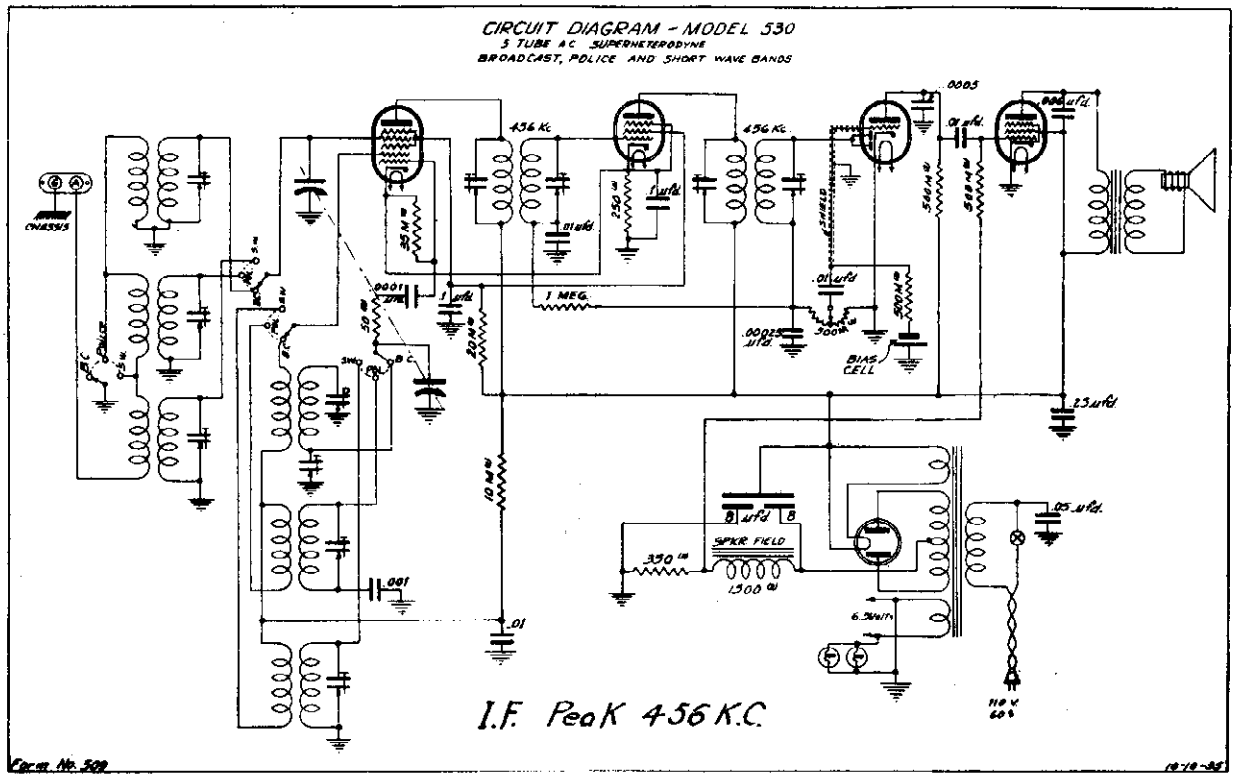

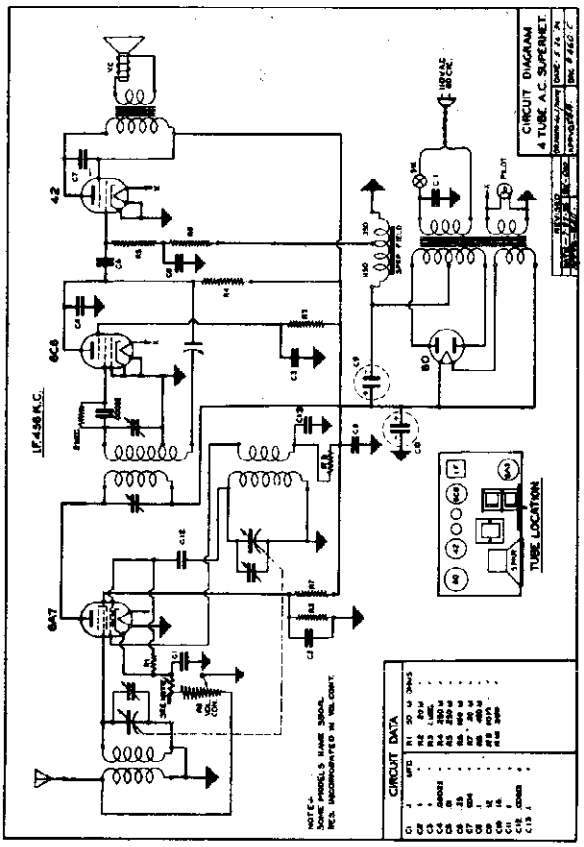

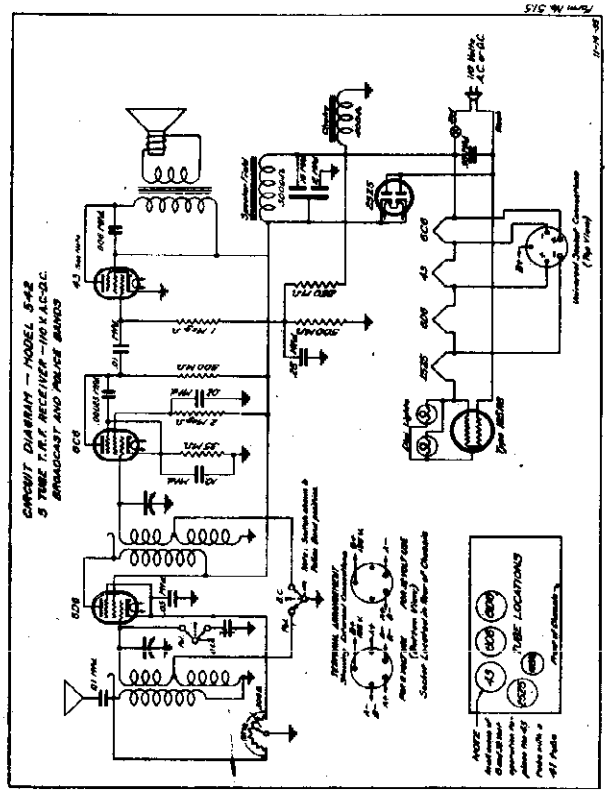

©John F. Rider, Publisher

MODEL ODM Series
Schematic

WELLS-GARDNER & CO.

Power Consumption - 90 Watts (At 115 volts 60 cycles)
Power Output - - - - - - - 5 Watts Undistorted
Selectivity - 22 KC Broad at 1000 times Signal (Sharp)

Tuning Frequency Range
B Range - - - - - - - - - - 535 to 1730 KC.
C Range - - - - - - - - - - 1715 to 5800 KC.
D Range - - - - - - - - - - 5750 to 18300 KC.

Sept., 1935

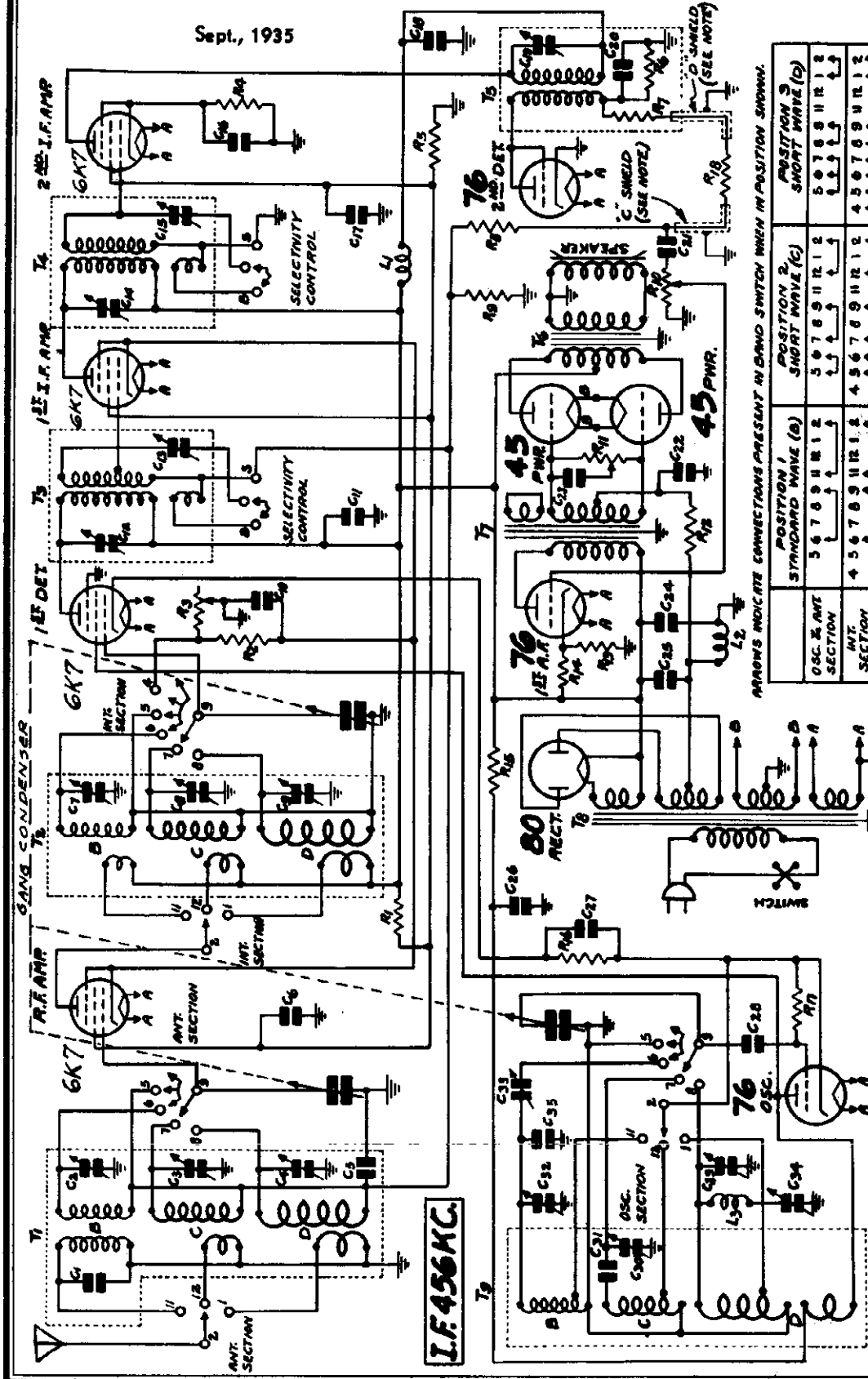

	POSITION 1 STANDARD WAVE (a)	POSITION 2 SHORT WAVE (c)	POSITION 3 SHORT WAVE (d)
OSC. & ANT SECTION	3 6 7 8 9 11 12 1 2	3 6 7 8 9 11 12 1 2	5 6 7 8 9 11 12 1 2
INT. SECTION	4 5 6 7 8 9 11 12 1 2	4 5 6 7 8 9 11 12 1 2	4 5 6 7 8 9 11 12 1 2

CONTACT LOCATIONS 3, 4 AND 10 IN OSC. AND ANT. SECTIONS, AND 3 AND 10 IN INT. SECTION ARE BLANK.

ARROWS INDICATE CONNECTIONS PRESENT IN BAND SWITCH WHEN IN POSITION SHOWN.

GROUPS OF CIRCUIT ELEMENTS ENCLOSED IN DOTTED RECTANGLES ARE COMPACT DISTINCT MECHANICAL ASSEMBLIES.
"B" AND "D" ON SELECTIVITY CONTROL DENOTES "BROAD" AND "SHARP" RESPECTIVELY.
THE CAPACITY OF THE "C" SHIELD IS 55 ~~f. THE CAPACITY OF THE "D" SHIELD IS 20 ~~f

C1 250 mmf.
C2 2.25 mmf.
C3 2.25 mmf.
C4 2.25 mmf.
C5 .05 mf. 180 V.
C6 .25 mf. 240 V.
C7 2.25 mmf.
C8 2.25 mmf.
C9 2.25 mmf.
C10 .25 mf. 180 V.
C11 .25 mf. 360 V.
C12 150-250 mmf. } ONE
C13 150-250 mmf. } UNIT
C14 150-250 mmf. } ONE
C15 150-250 mmf. } UNIT
C16 .05 mf. 180 V.
C17 4.0 mf. 150 V.
C18 .10 mf. 360 V.
C19 70-150 mmf.
C20 .50 mmf.
C21 .01 mf. 350 V.
C22 .50 mf. 180 V.
C23 .004 mf. 600 V.
C24 18.0 mf. 250 V.
C25 14.0 mf. 400 V.
C26 .05 mf. 360 V.
C27 .15 mmf.
C28 2.25 mmf.
C29 2.25 mmf.
C30 2.25 mmf.
C31 1400 mmf.
C32 2.25 mmf.
C33 300-600 mmf. } ONE
C34 40-100 mmf. } UNIT
R 1 16,000 ohm 2.0 W.
R 2 150 ohm .2 W.
R 3 2,500 ohm } Dual Volume
R10 2.0 megohm } Control
R 4 400 ohm .2 W.
R 5 30,000 ohm 1.0 W.
R 6 300,000 ohm .2 W.
R 7 100,000 ohm .2 W.
R 8 2.0 megohm .2 W.
R 9 1.0 megohm .2 W.
R11 1.0 megohm Tone Cont.
R12 100,000 ohm .2 W.
R13 1,000 ohm .5 W.
R14 25,000 ohm 3.0 W.
R15 25,000 ohm 1.0 W.
R16 2,500 ohm .2 W.
R17 80,000 ohm .2 W.
T 1 Ant. R.F. Trans.
T 2 Interstage R.F. Trans.
T 3 1st I.F. Trans.
T 4 2nd I.F. Trans.
T 5 Diode Input Trans.
T 6 Audio Output Trans.
T 7 Audio Input Trans.
T 8 Power Trans.
T 9 Osc. Inductors
L 1 Isolating Reactor
L 2 Speaker Field (370 Ohm)
L 3 Osc. Tracking Coil

MODEL ODM Series
Voltage, Socket

WELLS-GARDNER & CO.

Trimmers, Coil Data

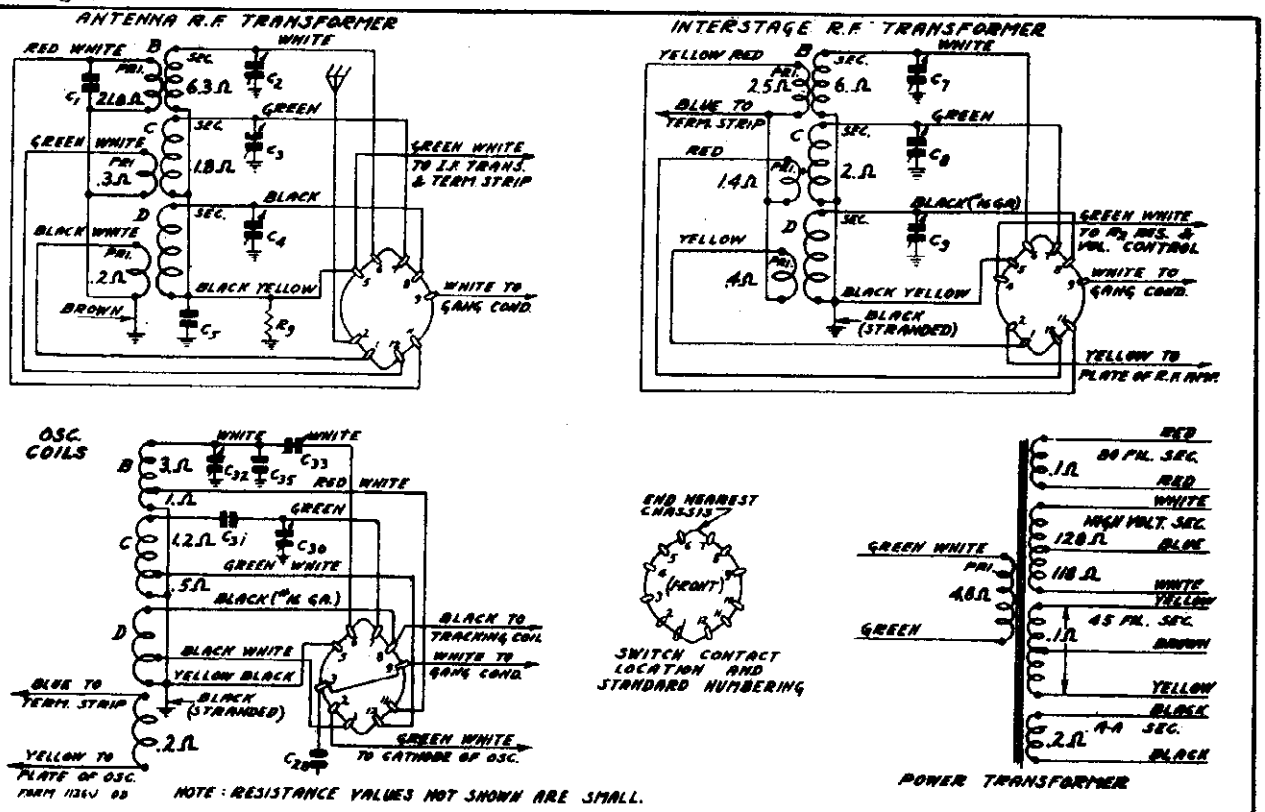

Fig. 4—Color Coding of Coil Wires and D. C. Resistance of Windings (Also see complete D. C. Resistance List in this Manual)

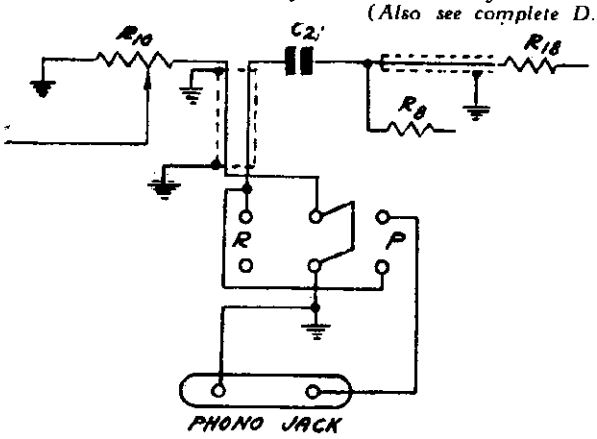

Fig. 7—Phonograph Connections

VOLTAGES AT SOCKETS

Line Voltage, 115 - Volume Control at Maximum
Antenna Shorted to Ground

Type of Tube	Function	Heater or Filam't	Plate to Ground	Screen to Ground	Cathode to Ground	Cathode M. A.
6K7 (6D6)	R. F.	6.1	265	120	3.7	9.0
6K7 (6D6)	1st Det.	6.1	265	110	9.5	3.8
76	Osc.	6.1	110			5.8
6K7 (6D6)	1st. I. F.	6.1	265	120	3.7	9.0
6K7 (6D6)	2nd I. F.	6.1	265	120	3.7	9.0
76	2nd Det.	6.1				
76	1st A. F.	6.1	265		14.	5.0
45	Power	2.5	265		50.(1)	22.
80	Rectifier	4.9				90. (total)

(1) As read with 500 Volt Scale. Grid to Ground.

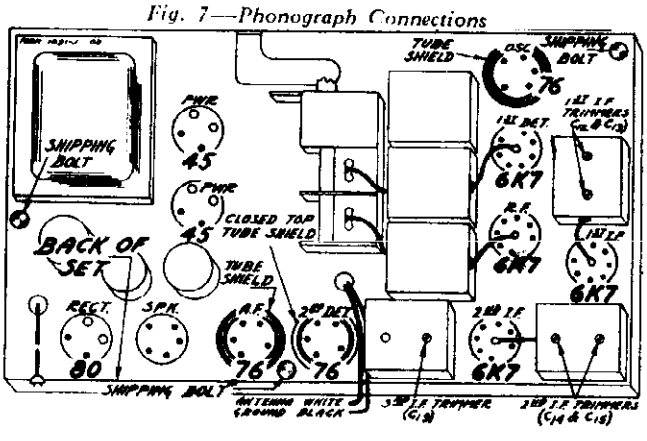

Fig. 5—Location of Tubes

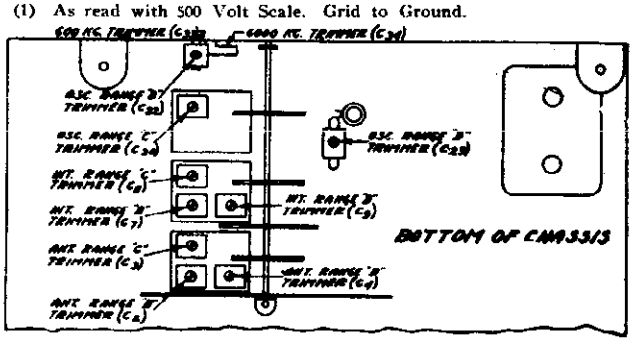

Fig. 3—Location of Trimmers

©John F. Rider, Publisher

©John F. Rider, Publisher

Alignment and Calibration

Correct alignment is extremely important in connection with all wave receivers. The receivers are all properly aligned at the factory with precision instruments and realignment should not be attempted unless all other possible causes of the faulty operation have first been investigated and unless the service technician has the proper equipment.

A signal generator that will provide an accurately calibrated signal at 456, 1730, 1500, 600, 5800, 5000, 18,300, 15,000 and 6000 KC and an output indicating meter are required. It will be practically impossible to align the receiver if unsatisfactory apparatus is used. If a station is tuned in with the selectivity control in the broad position and this control is then turned to the sharp position, the station may disappear. This is not an indication that the receiver is out of alignment.

Use a non-metallic screwdriver for the adjustments. The complete procedure is as follows:

I. F. Adjustment

Set the signal generator for a signal of 456 KC.

Connect the output of the signal generator through a 0.1 mf. condenser to the grid of the 1st detector.

Connect the ground lead of the receiver to the ground post of the signal generator.

Turn the band selector to the Range B position (standard wave band—purple dial color).

Turn the selectivity control to the sharp position and keep it in this position for all adjustments.

Turn the volume control to the maximum position.

Attenuate the signal from the signal generator to prevent the levelling-off action of the A.V.C.

Then adjust the five I.F trimmers until maximum output is obtained. The adjusting screws for these condensers are reached from the top of the chassis, and the location is shown in Fig. 5.

Range B Alignment

1730 KC Adjustment

Set the signal generator for 1730 KC.

Turn the rotor of the tuning condenser to the full open position.

Keep the band selector in the standard wave position.

Connect the antenna lead of the receiver through a 200 mmf. condenser to the output of the signal generator.

For this and all subsequent adjustments keep the volume control at the maximum position and attenuate the signal from the signal generator to prevent A.V.C. action.

Adjust the oscillator Range B trimmer (C32) until maximum output is obtained. The location of this trimmer is shown in Fig. 3.

1500 KC Adjustment

Set the signal generator for 1500 KC.

Turn the rotor of the tuning condenser carefully until maximum output

Loosen the pointer set screw and set the large pointer at the 1500 KC mark on the standard wave band scale. Retighten the set screw.

Adjust the interstage Range B trimmer (C7) and antenna Range B trimmer (C2) to maximum.

Do not change the setting of the oscillator Range B trimmer.

600 KC Adjustment

Set the signal generator for 600 KC.

Turn the tuning condenser rotor until maximum output is obtained.

Turn the rotor slowly back and forth at the same time adjusting the 600 KC trimmer until the peak of greatest intensity is obtained. See Fig. 3 for location of this trimmer.

Range C Alignment

5800 KC Adjustment

Set the signal generator for 5800 KC.

Connect the antenna lead of the receiver through a 400 ohm resistor to the output of the signal generator.

Turn the rotor of the tuning condenser to the full open position.

Turn the band selector to the Range C position (1st short wave band—green dial color).

Adjust the oscillator Range C trimmer (C30) until maximum output is obtained. See Fig. 3 for location of this trimmer.

5000 KC Adjustment

Set the signal generator for 5000 KC.

Turn the rotor of the tuning condenser carefully until maximum output is obtained.

Adjust the interstage Range C trimmer (C8) and antenna Range C trimmer (C3) to maximum.

Do not change the setting of the oscillator Range C trimmer.

Range D Alignment

18,300 KC Adjustment

Set the signal generator for 18,300 KC.

Keep the antenna lead of the receiver connected through the 400 ohm resistor to the output of the signal generator.

Turn the rotor of the tuning condenser to the full open position.

Turn the band selector to the Range D position (2nd short wave band—red dial color).

Adjust the oscillator Range D trimmer (C29) until maximum output is obtained. See Fig. 3 for location of this trimmer.

15,000 KC Adjustment

Set the signal generator for 15,000 KC.

Turn the rotor of the tuning condenser carefully until maximum output is obtained.

Adjust the interstage Range D trimmer (C9) and antenna Range D trimmer (C4) to maximum.

When adjusting the interstage Range D trimmer, it will be necessary at the same time to turn the tuning condenser rotor slowly back and forth until the peak of greatest intensity is obtained.

Then go back and repeat the procedure as given for the 18,300 KC adjustment. If it is found necessary to make any appreciable change in the setting of the oscillator Range D trimmer, the 15,000 KC adjustment must be repeated.

Do not make any further change in the setting of the oscillator Range D trimmer.

6000 KC Adjustment

Set the signal generator for 6000 KC.

Turn the tuning condenser rotor until maximum output is obtained.

Turn the rotor slowly back and forth at the same time adjusting the 6000 KC trimmer until the peak of greatest intensity is obtained. See Fig. 3 for location of this trimmer.

D. C. Resistance of Windings

Refer to Fig. 4.

Following are the D. C. resistances of the various windings in the chassis. The values given below will vary slightly in different sets.

Part No.	Winding	Coils	D.C. Resistance in Ohms
P-9A425	Antenna R. F. Transformer	T1	
	Range B Primary Winding		21.8
	Range C Primary Winding		0.3
	Range D Primary Winding		0.2
	Range B Secondary Winding		6.3
	Range C Secondary Winding		1.8
	Range D Secondary Winding		Small
P-9A425	Interstage R. F. Transformer	T2	
	Range B Primary Winding		2.5
	Range C Primary Winding		1.4
	Range D Primary Winding		0.4
	Range B Secondary Winding		5.0
	Range C Secondary Winding		2.0
	Range D Secondary Winding		Small
P-9A426	Oscillator Coils	T9	
	Range B Grid Coil		
	Red White Tap to White		3.0
	Red White Tap to Ground		1.0
	Range C Grid Coil		
	Green White Tap to Green		1.2
	Green White Tap to Ground		0.5
	Range D Grid Coil		
	Black White Tap to Black		Small
	Black White Tap to Ground		Small
	Oscillator Plate Coil		0.2
P-9A397	1st I. F. Transformer	T3	
	Primary Winding		4.6
	Secondary Winding		
	Long Portion		3.4
	Short Portion		1.7
	Coupling Winding		0.2
P-9A398	2nd I. F. Transformer	T4	
	Primary Winding		9.4
	Secondary Winding		9.0
	Coupling Winding		0.5
P-9A399	3rd I. F. Transformer	T5	
	Primary Winding		10.2
	Secondary Winding		28.4
P-50X16	Audio Input Transformer	T7	
	Primary Winding		2350.
	Secondary Winding		
	Center Tap to Inside		2000.
	Center Tap to Outside		2690.
P-51X32	Audio Output Transformer	T6	
	Primary Winding		
	Center Tap to Inside		196.
	Center Tap to Outside		222.
	Secondary Winding		0.4
P-12A208	Dynamic Speaker (10")		
	Speaker Voice Coil		1.6
	Speaker Field	L2	970.
P-53X94	115 Volt 60 Cycle Power Trans.	T8	
	Primary Winding		4.8
	Tube Filament Secondary (A-A)		.0.2
	Tube Filament Secondary (B-B) (45)		0.1
	Rectifier Filament Secondary		0.1
	High Voltage Secondary Winding		
	Center Tap to Inside		118.
	Center Tap to Outside		129.
P-9A429	2nd I. F. Plate Isolating Resistor	L1	36.
P-9A391	High Frequency Oscillator Tracking Coil	L3	1.2

Twenty-five Cycle Receivers

The twenty-five cycle receiver differs from the sixty cycle receiver only in the fact that a different power transformer is used. The correct power transformer is shown in the parts list.

The twenty-five cycle receiver can be operated satisfactorily from a sixty cycle power supply. However, the reverse is not true, the sixty cycle receiver cannot be operated from a twenty-five cycle power supply.

A 115-230 Volt, 40 to 60 cycle as well as other power transformers with special power ratings are also available for this model.

Changes in Early Models

In the early models of this receiver the tone control resistor (R11) was connected as a series variable resistor connecting in series through the condenser C23 between the grids of the 45 tubes in the audio output stage. In the later models it is employed as a potentiometer in the manner shown in Fig. 2.

The 100,000 ohm resistor (R18) was not used in the early models. Condenser C21 was connected directly to resistor R7.

The type 6K7 metal tubes replace the type 6D6 glass tubes which were used in the early models.

Condenser C35 was added to the oscillator coil standard wave section in later models. It is not, however, used in all cases but only when this capacity is required in this circuit.

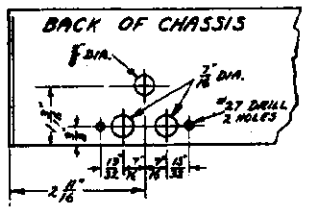

Fig. 8—Details of Panel Drilling for Phono Assembly

Phonograph Connections

Phonograph connections can be made as shown in Fig. 7. The parts required to make this installation are shown in the parts list.

To mount the phono switch and phono jack, drill holes of a size and in the position shown in Fig. 8 at the left hand side (from back) of the rear panel of the chassis.

MODEL 2CM Series
Schematic

WELLS-GARDNER & CO., INC.

Power Consumption - 140 Watts (At 115 volts 60 cycles)

Power Output - - - - - - 15 Watts Undistorted

Tuning Frequency Range

B Range - - - - - - - - - 535 to 1730 KC.
C Range - - - - - - - - - 1715 to 5800 KC.
D Range - - - - - - - - - 5750 to 18300 KC.

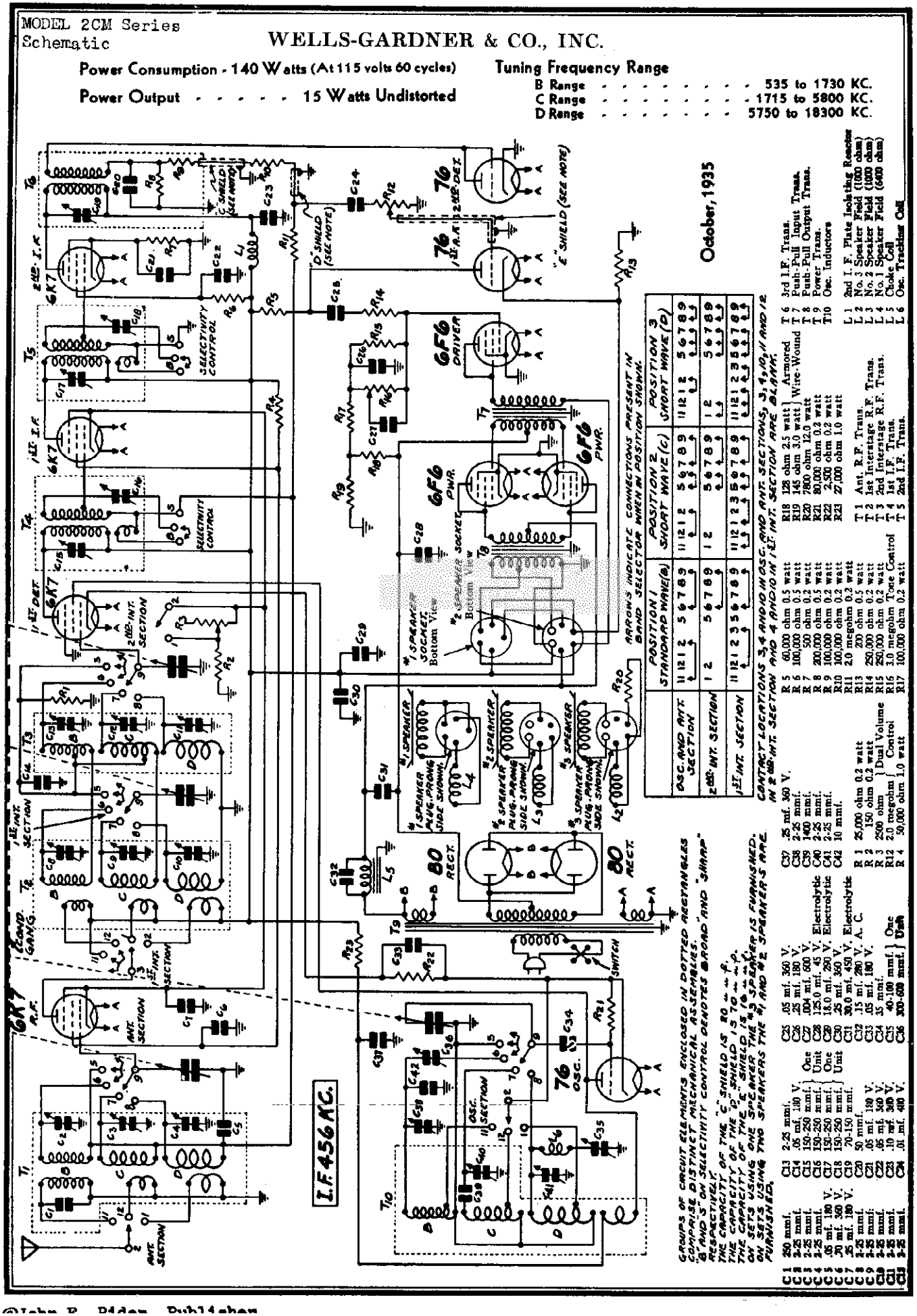

	OSC. AND ANT. SECTION	2nd INT. SECTION	1st INT. SECTION
POSITION 1 STANDARD WAVE (a)	1 1 2 1 2 5 6 7 8 9	1 2 5 6 7 8 9	1 1 2 1 2 3 5 6 7 8 9
POSITION 2 SHORT WAVE (c)	1 1 2 1 2 5 6 7 8 9	1 2 5 6 7 8 9	1 1 2 1 2 3 5 6 7 8 9
POSITION 3 SHORT WAVE (d)	1 1 2 1 2 5 6 7 8 9	1 2 5 6 7 8 9	1 1 2 1 2 3 5 6 7 8 9

C1	250 mmf.	C13	2-25 mmf.	C25	.05 mf. 360 V.	C37	.25 mf. 360 V.	R5	60,000 ohm 0.5 watt	R18	128 ohm 2.5 watt } Armored
C2	2-25 mmf.	C14	.05 mf. 180 V.	C26	.25 mf. 180 V.	C38	2-25 mmf.	R6	100,000 ohm 0.5 watt	R19	145 ohm 3.0 watt } Wire-Wound
C3	2-25 mmf.	C15	150-250 mmf. } One	C27	.004 mf. 600 V.	C39	140 mmf.	R7	500 ohm 0.2 watt	R20	7800 ohm 12.0 watt
C4	2-25 mmf.	C16	150-250 mmf. } Unit	C28	125.0 mf. 45 V. Electrolytic	C40	2-25 mmf.	R8	200,000 ohm 0.5 watt	R21	80,000 ohm 0.2 watt
C5	2-25 mmf.	C17	150-250 mmf. } One	C29	18.0 mf. 290 V. Electrolytic	C41	2-25 mmf.	R9	100,000 ohm 0.2 watt	R22	2,500 ohm 0.2 watt
C6	.05 mf. 180 V.	C18	150-250 mmf. } Unit	C30	.25 mf. 360 V.	C42	10 mmf.	R10	100,000 ohm 0.2 watt	R23	27,000 ohm 1.0 watt
C7	.25 mf. 180 V.	C19	70-150 mmf.	C31	30.0 mf. 450 V. Electrolytic			R11	2.0 megohm 0.2 watt		
C8	25 mmf.	C20	50 mmf.	C32	.15 mf. 280 V. A. C.	R 1	25,000 ohm 0.2 watt	R13	200 ohm 0.5 watt	T 1	Ant. R.F. Trans.
C9	2-25 mmf.	C21	.05 mf. 180 V.	C33	.05 mf. 180 V.	R 2	150 ohm 0.2 watt	R14	250,000 ohm 0.2 watt	T 2	1st Interstage R.F. Trans.
C10	2-25 mmf.	C22	.05 mf. 360 V.	C34	35 mmf.	R 3	2500 ohm } Dual Volume	R15	250,000 ohm 0.2 watt	T 3	2nd Interstage R.F. Trans.
C11	2-25 mmf.	C23	.10 mf. 360 V.	C35	40-100 mmf. } One	R12	2.0 megohm } Control	R16	3.0 megohm Tone Control	T 4	1st I.F. Trans.
C12	2-25 mmf.	C24	.01 mf. 400 V.	C36	300-600 mmf. } Unit	R 4	50,000 ohm 1.0 watt	R17	100,000 ohm 0.2 watt	T 5	2nd I.F. Trans.

T 6	3rd I.F. Trans.
T 7	Push-Pull Input Trans.
T 8	Push-Pull Output Trans.
T 9	Power Trans.
T10	Osc. Inductors
L 1	2nd I. F. Plate Isolating Reactor
L 2	No. 3 Speaker Field (1000 ohm)
L 3	No. 2 Speaker Field (1000 ohm)
L 4	No. 1 Speaker Field (600 ohm)
L 5	Choke Coil
L 6	Osc. Tracking Coil

©John F. Rider Publisher

WELLS-GARDNER & CO., INC.

MODEL 20M Series
Socket, Trimmers
Voltage, Coil Data

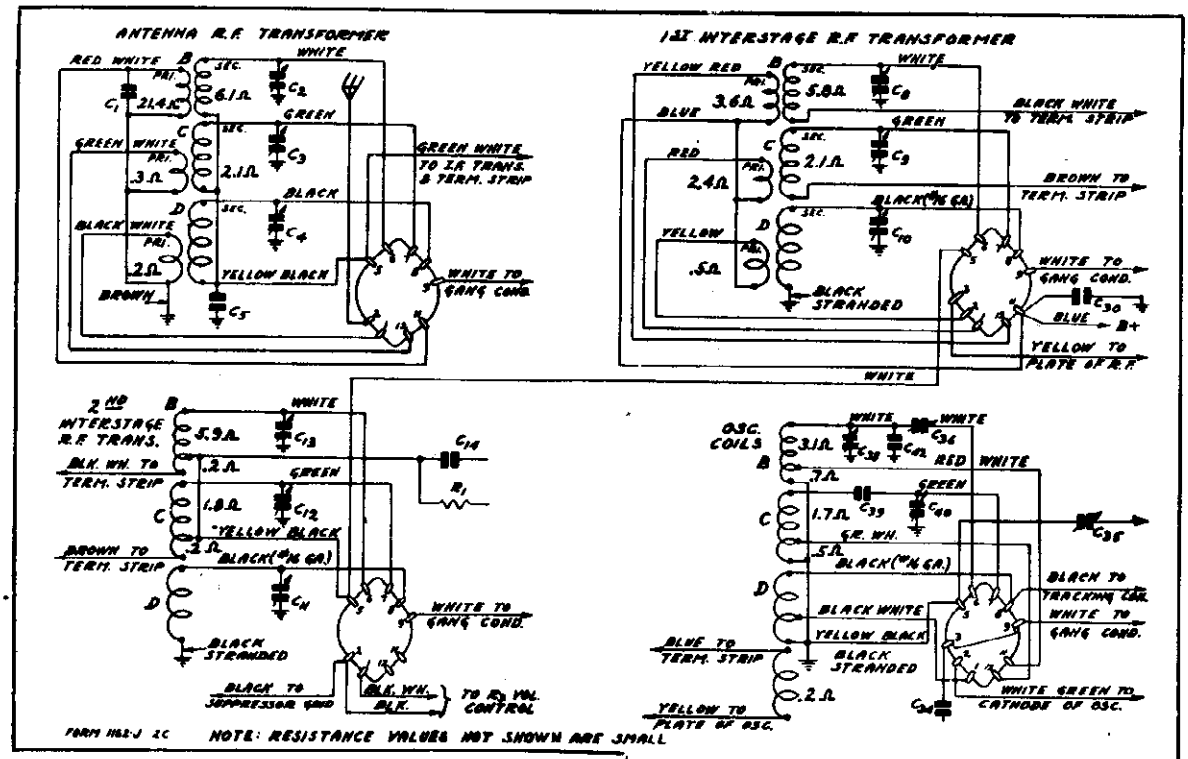

Fig. 4—Color Coding of Coil Wires and D. C. Resistance of Windings. (Also see complete D. C. Resistance List)

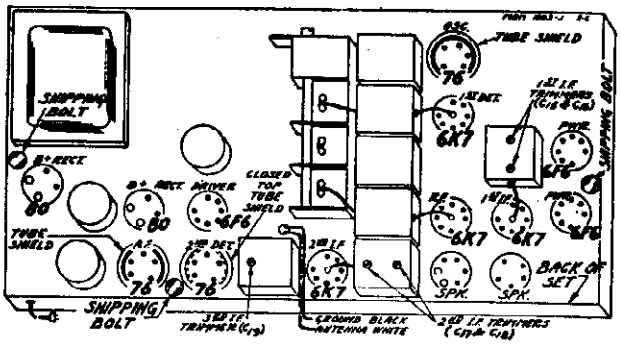

Fig. 5—Location of Tubes

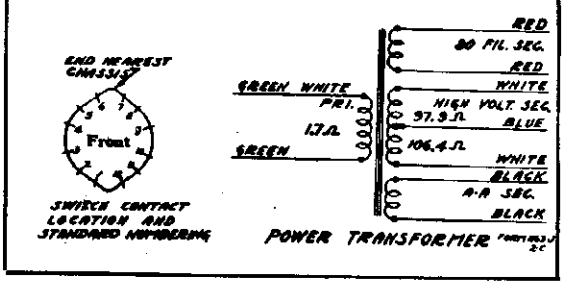

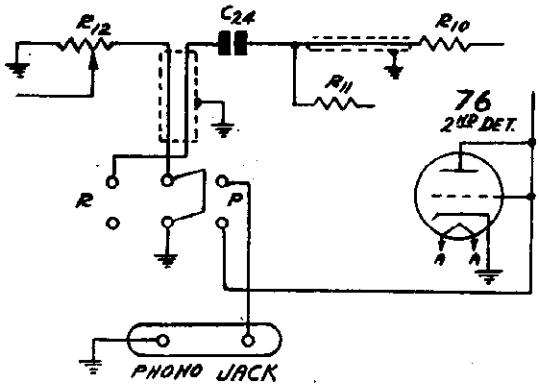

Fig. 7—Phonograph Connections

VOLTAGES AT SOCKETS

Line Voltage 115 - Antenna Shorted to Ground
Volume Control at Maximum

Tube	Function	Across Heater	Plate to Ground	Screen to Ground	Cath. to Ground	Cath. M A
6K7	R. F.	6.2	245	80	2.8	7.6
6K7	1st Det.	6.2	245	90	6.5	2.6
76	Osc.	6.2	90			5.3
6K7	1st I. F.	6.2	245	80	2.8	7.6
6K7	2nd I. F.	6.2	245	74	3.9	7.0
76	2nd Det.	6.2				
76	1st A. F.	6.2	110		5.6	2.1
6F6	Driver	6.2	235	230	20.0(1)	27.0
6F6	Power	6.2	345	345	38.0(2)	22.5
80	Rectifier	5.1	500(3)			140.0(4)

(1) As read across R19
(2) Grid to Ground
(3) Plate to Center Tap
(4) Two tubes in parallel

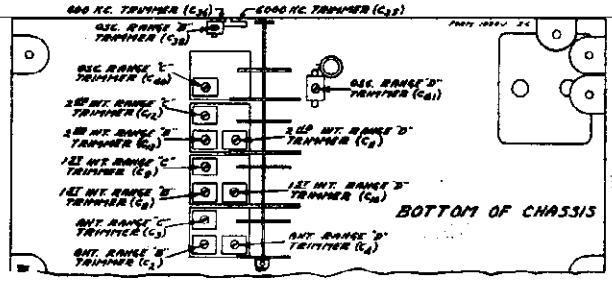

Fig. 3—Location of Trimmers

Alignment and Calibration

Correct alignment is extremely important in connection with all wave receivers. The receivers are all properly aligned at the factory with precision instruments and realignment should not be attempted unless all other possible causes of the faulty operation have first been investigated and unless the service technician has the proper equipment.

A signal generator that will provide an accurately calibrated signal at 456, 1730, 1500, 600, 5800, 5000, 18,300, 15,000 and 6000 KC and an output indicating meter are required. It will be practically impossible to align the receiver if unsatisfactory apparatus is used. If a station is tuned in with the selectivity control in the broad position and this control is then turned to the sharp position, the station may disappear. This is not an indication that the receiver is out of alignment.

Use a non-metallic screwdriver for the adjustments. The complete procedure is as follows:

I. F. Adjustment

Set the signal generator for a signal of 456 KC.

Connect the output of the signal generator to the grid of the 1st detector through a 0.1 MF condenser.

Connect the ground lead of the receiver to the ground post of the signal generator.

Turn the band selector to the Range B position (standard wave band—purple dial color).

Turn the selectivity control to the sharp position and keep it in this position for all adjustments.

Turn the volume control to the maximum position.

Attenuate the signal from the signal generator to prevent the levelling-off action of the A.V.C.

Then adjust the five I.F. trimmers until maximum output is obtained. The adjusting screws for these condensers are reached from the top of the chassis, and the location is shown in Fig. 5.

Range B Alignment

1730 KC Adjustment

Set the signal generator for 1730 KC.

Turn the rotor of the tuning condenser to the full open position.

Keep the band selector in the standard wave position.

Connect the antenna lead of the receiver through a 200 mmf. condenser to the output of the signal generator.

For this and all subsequent adjustments keep the volume control at the maximum position and attenuate the signal from the signal generator to prevent A.V.C. action.

Adjust the oscillator Range B trimmer (C38) until maximum output is obtained. The location of this trimmer is shown in Fig. 3.

1500 KC Adjustment

Set the signal generator for 1500 KC.

Turn the rotor of the tuning condenser carefully until maximum output is obtained.

Loosen the pointer set screw and set the large pointer at the 1500 KC mark on the standard wave band scale. Retighten the set screw.

Adjust the 1st and 2nd interstage Range B trimmers (C8 and C13) and antenna Range B trimmer (C2) to maximum.

Do not change the setting of the oscillator Range B trimmer.

600 KC Adjustment

Set the signal generator for 600 KC.

Turn the tuning condenser rotor until maximum output is obtained.

Turn the rotor slowly back and forth at the same time adjusting the 600 KC trimmer until the peak of greatest intensity is obtained. See Fig. 3 for location of this trimmer.

Be sure to use a non-metallic screwdriver for this adjustment.

Range C Alignment

5800 KC Adjustment

Set the signal generator for 5800 KC.

Connect the antenna lead of the receiver through a 400 ohm resistor to the output of the signal generator.

Turn the rotor of the tuning condenser to the full open position.

Turn the band selector to the Range C position (1st short wave band—green dial color).

As mentioned above, keep the volume control at the maximum position and attenuate the signal from the signal generator to prevent A.V.C. action.

Adjust the oscillator Range C trimmer (C40) until maximum output is obtained. See Fig. 3 for location of this trimmer.

5000 KC Adjustment

Set the signal generator for 5000 KC.

Turn the rotor of the tuning condenser carefully until maximum output is obtained.

Adjust the 1st and 2nd interstage Range C trimmers (C9 and C12) and antenna Range C trimmer (C3) to maximum.

Do not change the setting of the oscillator Range C trimmer.

Range D Alignment

18,300 KC Adjustment

Set the signal generator for 18,300 KC.

Keep the antenna lead of the receiver connected through the 400 ohm resistor to the output of the signal generator.

Turn the rotor of the tuning condenser to the full open position.

Turn the band selector to the Range D position (2nd short wave band—red dial color).

As mentioned above, keep the volume control at the maximum position and attenuate the signal from the signal generator to prevent A.V.C. action.

Adjust the oscillator Range D trimmer (C41) until maximum output is obtained. See Fig. 3 for location of this trimmer.

15,000 KC Adjustment

Set the signal generator for 15,000 KC.

Turn the rotor of the tuning condenser carefully until maximum output is obtained.

Adjust the 1st and 2nd interstage Range D trimmers (C10 and C11) and antenna Range D trimmer (C4) to maximum.

When adjusting the 2nd interstage Range D trimmer, it will be necessary at the same time to turn the tuning condenser rotor slowly back and forth until the peak of greatest intensity is obtained.

Then go back and repeat the procedure as given for the 18,300 KC adjustment. If it is found necessary to make any appreciable change in the setting of the oscillator Range D trimmer, the 15,000 KC adjustment must be repeated.

Do not make any further change in the setting of the oscillator Range D trimmer.

6000 KC Adjustment

Set the signal generator for 6000 KC.

Turn the tuning condenser rotor until maximum output is obtained.

Turn the rotor slowly back and forth at the same time adjusting the 6000 KC trimmer until the peak of greatest intensity is obtained. See Fig. 3 for location of this trimmer.

Use a non-metallic screwdriver for this adjustment

Twenty-five Cycle Receivers

The twenty-five cycle receiver differs from the sixty cycle receiver only in the fact that a different power transformer is used. The correct power transformer is shown in the parts list.

The twenty-five cycle receiver can be operated satisfactorily from a sixty cycle power supply. However, the reverse is not true, the sixty cycle receiver cannot be operated from a twenty-five cycle power supply.

A 115-230 Volt, 40 to 60 cycle as well as other power transformers with special power ratings are also available for this model.

D. C. Resistance of Windings

Part No.	Winding	Code	In Ohms
P-9A418	Antenna R. F. Transformer	T1	
	Range B Primary Winding		21.4
	Range C Primary Winding		0.3
	Range D Primary Winding		0.2
	Range B Secondary Winding		4.1
	Range C Secondary Winding		2.1
	Range D Secondary Winding		Small
P-9A411	1st Interstage R. F. Transformer	T2	
	Range B Primary Winding		3.6
	Range C Primary Winding		2.4
	Range D Primary Winding		0.5
	Range B Secondary Winding		5.8
	Range C Secondary Winding		2.1
	Range D Secondary Winding		Small
P-50X24	Audio Input Transformer	T7	
	Primary Winding		415.0
	Secondary Winding		
	Center Tap to Inside		211.7
	Center Tap to Outside		288.5
P-51X26	Audio Output Transformer	T8	
	Primary Winding		
	Center Tap to Inside		135.5
	Center Tap to Outside		155.3
	Secondary Winding		
	Tap to Upper Side		0.16
	Tap to Ground Side		0.12
P-53X82	Power Transformer (115 Volt-60 Cycle)	T9	
	Primary Winding		1.7
	Tube Filament Secondary (A-A)		Small
	Tube Filament Secondary (B-B) (80)		Small
	High Voltage Secondary Winding		
	Center Tap to Inside		97.9
	Center Tap to Outside		106.4
P-9A427	Oscillator Coils	T10	
	Range B Grid Coil		
	Red White Tap to White		3.1
	Red White Tap to Ground		0.7
	Range C Grid Coil		
	Green White Tap to Green		1.7
	Green White Tap to Ground		0.5
	Range D Grid Coil		
	Black White Tap to Black		Small
	Black White Tap to Ground		Small
	Oscillator Plate Coil		0.2
P-9A400	2nd I. F. Plate Isolating Reactor	L1	34.7
P-12A204	12" Dynamic Speaker (No. 1—See Fig. 2)		
	Speaker Field	L4	6400.
	Voice Coil		Small
P-12A205	12" Dynamic Speaker (No. 2—See Fig. 2)		
	Speaker Field	L3	1000.
	Voice Coil		Small
P-12A226	12" Dynamic Speaker (No. 3—See Fig. 2)		
	Speaker Field	L2	1000.
	Voice Coil		Small
P-52X36	Reactor Assembly	L5	143.6
P-9A391	High Frequency Oscillator Tracking Coil	L6	1.0
P-9A412	2nd Interstage R. F. Coils	T3	
	Range B Section		
	Long Portion		5.9
	Short Portion		0.2
	Range C Section		
	Long Portion		1.8
	Short Portion		0.2
	Range D Section		Small
P-9A413	1st I. F. Transformer	T4	
	Primary Winding		4.4
	Coupling Winding		0.3
	Secondary Winding		
	Tap to Condenser Side		2.3
	Tap to Switch Side		2.3
P-9A414	2nd I. F. Transformer	T5	
	Primary Winding		4.3
	Coupling Winding		0.3
	Secondary Winding		
	Tap to Condenser Side		2.3
	Tap to Switch Side		2.3
P-9A415	3rd I. F. Transformer	T6	
	Primary Winding		9.8
	Secondary Winding		30.0

©John F. Rider, Publisher

Schematic

WELLS-GARDNER & CO., INC.

MODEL 2DL Series

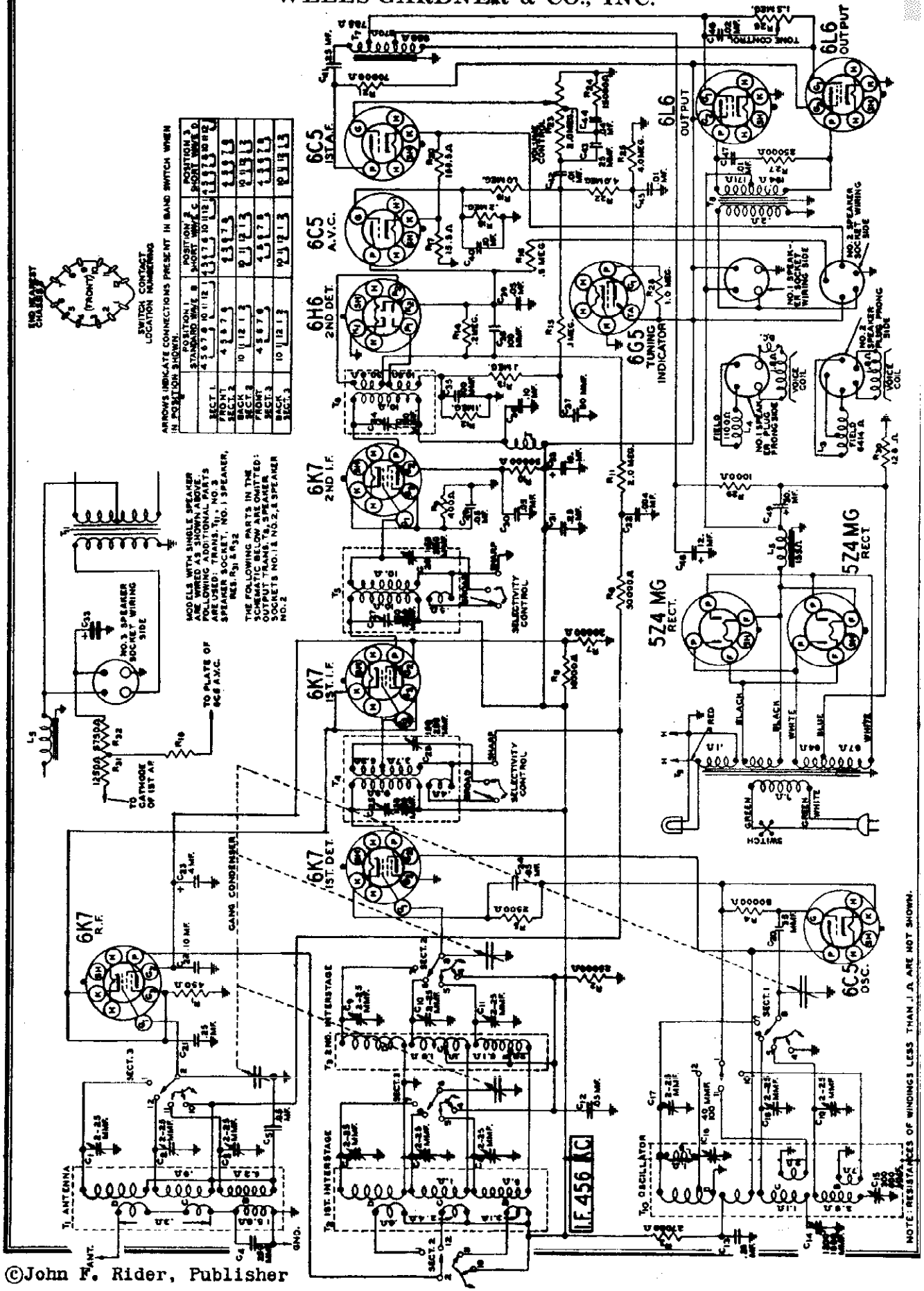

©John F. Rider, Publisher

MODEL 2DL Series
Socket, Trimmers
Coil Data, Phono

WELLS-GARDNER & CO., INC.

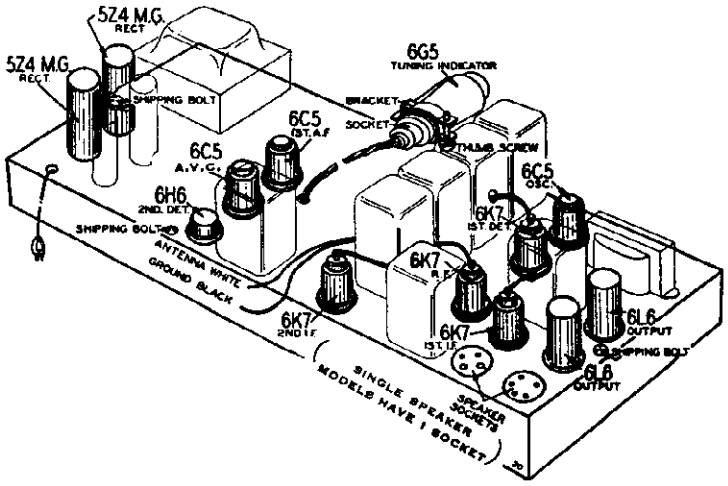

Fig. 5—Location of Tubes

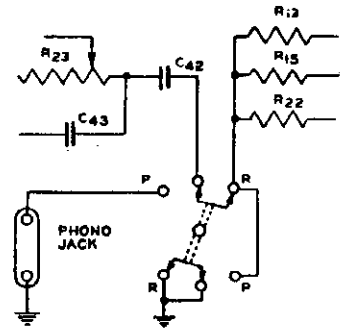

Fig. 7—Phonograph Connections

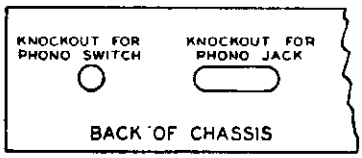

Fig. 8—Location of Phono Knockouts

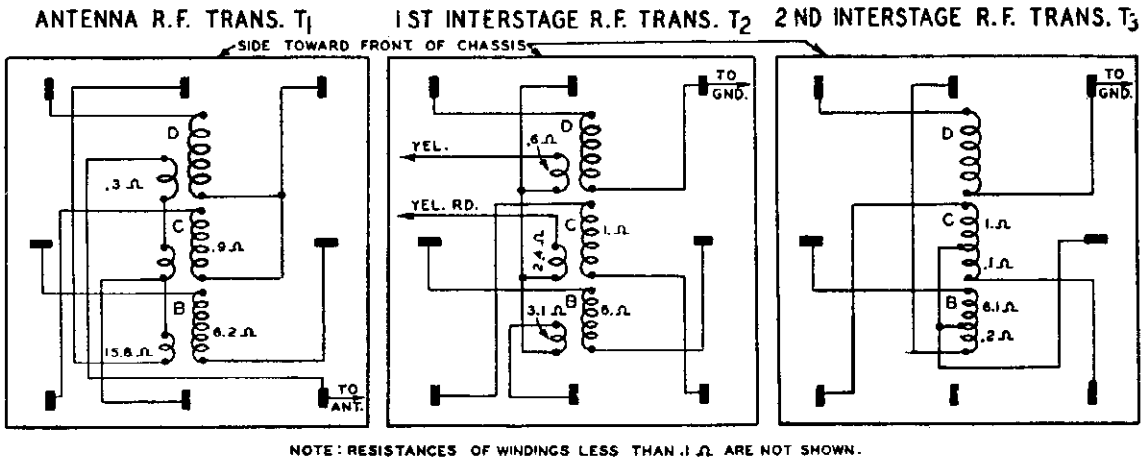

Fig. 6—R.F. and Oscillator Coil Base Terminal Arrangement and D.C. Resistance of Windings

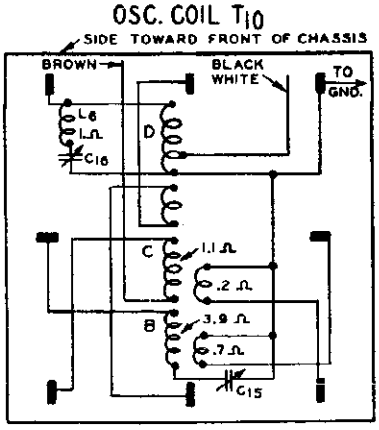

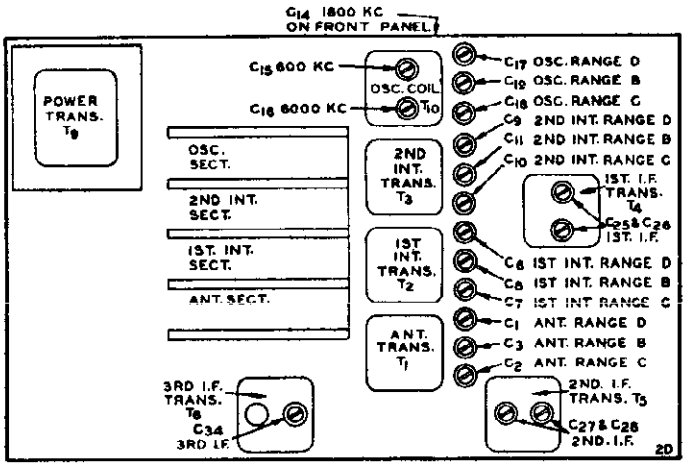

Fig. 3—Location of Trimmers

©John F. Rider, Publisher

I. F. Adjustment

Set the signal generator for a signal of 456 KC.

Connect the output of the signal generator through a .1 mf. condenser to the grid of the 1st detector.

Connect the ground lead of the receiver to the ground post of the signal generator.

Turn the band switch to the Range B position (standard wave band).

Turn the selectivity control to the sharp position and keep it in this position for all adjustments.

Turn the volume control to the maximum position.

Attenuate the signal from the signal generator to prevent the levelling-off action of the AVC.

Then adjust the five I.F. trimmers until maximum output is obtained. The adjusting screws for these condensers are reached from the top of the chassis and the location is shown in Fig. 3.

Range B Alignment

After the procedure for the alignment of each range, as explained below, is completed, it is advisable to repeat the procedure as a final check.

1730 KC Adjustment

Set the signal generator for 1730 KC.

Turn the rotor of the tuning condenser to the full open position.

Keep the band switch in the standard wave position.

Connect the antenna lead of the receiver through a 200 mmf. condenser to the output of the signal generator.

For this and all subsequent adjustments keep the volume control at the maximum position and attenuate the signal from the signal generator to prevent AVC action.

Adjust the oscillator Range B trimmer (C19) until maximum output is obtained. The location of this trimmer is shown in Fig. 3.

1500 KC Adjustment

Set the signal generator for 1500 KC.

Turn the rotor of the tuning condenser carefully until maximum output is obtained.

In sets using pointers, loosen the screw of the large pointer and set the pointer at the 1500 KC mark on the standard wave band scale. Retighten the screw.

In sets using the moving beam of light, there is moving light assembly held to the front of the drive drum by means of a screw. Loosen this screw and move the light assembly until it is at the 1500 KC mark on the dial. Retighten the screw.

Adjust the 1st and 2nd interstage Range B trimmers (C8 and C11) and antenna Range B trimmer (3) to maximum.

Do not change the setting of the oscillator Range B trimmer.

600 KC Adjustment

Set the signal generator for 600 KC

Turn the tuning condenser rotor until maximum output is obtained.

Turn the rotor slowly back and forth at the same time adjusting the 600 KC trimmer until the peak of greatest intensity is obtained. See Fig. 3 for location of this trimmer.

Range C Alignment

CAUTION—When aligning the short wave bands be sure NOT to adjust at the image frequency. This can be checked as follows: Let us say the signal generator is set for 5000 KC. The signal will then be heard at 5000 KC on the dial of the radio. The image signal, which is much weaker, will be heard at 5000 less 912 KC, or 4088 KC. It may be necessary to increase the input signal to hear the image.

5800 KC Adjustment

Set the signal generator for 5800 KC.

Connect the antenna lead of the receiver through a 400 ohm resistor to the output of the signal generator.

Turn the rotor of the tuning condenser to the full open position.

Turn the band switch to the Range C position (first short wave band).

Adjust the oscillator Range C trimmer (C18) until maximum output is obtained. See Fig. 3 for location of this trimmer.

5000 KC Adjustment

Set the signal generator for 5000 KC.

Turn the rotor of the tuning condenser carefully until maximum output is obtained.

Adjust the 1st and 2nd interstage Range C trimmers (C7 and C10) and antenna Range C trimmer (C2) to maximum.

Do not change the setting of the oscillator Range C trimmer.

1800 KC Adjustment

Set the signal generator for 1800 KC.

Turn the tuning condenser rotor until maximum output is obtained.

Turn the rotor slowly back and forth at the same time adjusting the 1800 KC trimmer until the peak of greatest intensity is obtained. See Fig. 3 for location of this trimmer.

Range D Alignment

18,300 KC Adjustment

Set the signal generator for 18,300 KC.

Keep the antenna lead of the receiver connected through the 400 ohm resistor to the output of the signal generator.

Turn the rotor of the tuning condenser to the full open position.

Turn the band switch to the Range D position (second short wave band).

Adjust the oscillator Range D trimmer (C17) until maximum output is obtained. See Fig. 3 for location of this trimmer.

15,000 KC Adjustment

Set the signal generator for 15,000 KC.

Turn the rotor of the tuning condenser carefully until maximum output is obtained.

Adjust the 1st and 2nd interstage Range D trimmers (C6 and C9) and antenna Range D trimmer (C1) to maximum.

When adjusting the 2nd interstage Range D trimmer, it will be necessary at the same time to turn the tuning condenser rotor slowly back and forth until the peak of greatest intensity is obtained.

Do not change the setting of the oscillator Range D trimmer.

6000 KC Adjustment

Set the signal generator for 6000 KC.

Turn the tuning condenser rotor until maximum output is obtained.

Turn the rotor slowly back and forth at the same time adjusting the 6000 KC trimmer until the peak of greatest intensity is obtained. See Fig. 3 for location of this trimmer.

Trimmer Replacement

If one trimmer of the gang trimmer strip should become defective, it is not necessary to replace the entire strip. A single trimmer P-17A36, as shown in the replacement parts list, may be used. Disconnect the lead from the coil side (side not grounded) of the defective trimmer in the strip. This connection is then made to the single trimmer. Connect it to the side of the trimmer not in contact with the adjusting screw. The other side of the single trimmer is then connected to a good ground, using a piece of heavy wire in order to support the trimmer adequately. In replacing a trimmer, be sure to keep both leads as short as possible and keep the ungrounded lead as far from ground as possible.

Planetary Drive Assembly

The planetary assembly is the unit that is integral with the tuning shaft.

If the nut on the back end of this assembly is too tight, the drive will be jerky and will turn hard in high speed. If this condition exists, back off this nut one or two turns and note the effect.

If this nut is too loose, the drive will slip in slow speed. The remedy in this case, of course, is to tighten the nut.

Should the condenser drive cord slip when the planetary pulley is turning, inspect the tuning condenser, drive drum and gears to see if they are turning properly or if they are being obstructed in some way.

If the drive turns unevenly (rough in spots), this may mean that the planetary assembly is defective or damaged internally and a new unit will be required.

Phonograph Connections

Phonograph connections can be made as shown in Fig. 7. The parts required as shown in the parts list. Knockouts are provided in the back of the chassis for mounting the phono jack and phono switch—See Fig. 8.

The phono switch should be mounted with one set of terminals nearest the bottom of the chassis base.

The connections are made by opening the diode return circuit at the volume control. This is done by removing the wire connecting condenser C42 to resistors R15, R19 and R22, at the terminal strip located near the back of the planetary drive. Cut this wire to correct length and solder it to the proper terminal on the phono switch—See Fig. 7, keeping the wire close to the back of the chassis base.

A wire is then connected from the lug on the above mentioned terminal strip to which C42 was connected, to the correct terminal on the phono switch—See Fig. 7. This wire should be brought directly to the back of the chassis at a point close to the phono jack pin tip nearest the channel provided for a chassis mounting bolt, and then routed over to the switch.

Complete the other connections as illustrated in Fig. 7.

It will be necessary to re-route the AC line cord away from the 6C5 1st audio grid lead by running it between the volume control and the filter choke and then straight back to the hole provided for it in the chassis base.

If a hum is heard when the phono pickup is touched, reverse the two pickup leads.

Twenty-five Cycle Models

The twenty-five cycle receiver differs from the sixty cycle receiver only in the fact that a different power transformer is used. The correct power transformer is shown in the parts list.

The twenty-five cycle receiver can be operated satisfactorily from a sixty cycle power supply. However, the reverse is not true, the sixty cycle receiver cannot be operated from a twenty-five cycle power supply.

A 115-230 volt, 40 to 60 cycle as well as other power transformers with special power ratings are also available for this model.

Line Voltage: 115 — **Antenna Shorted to Ground**
Volume Control: Maximum — **Position of Band Switch: Standard Wave**

TUBE	FUNCTION	VOLTAGE BETWEEN SOCKET PRONGS AND GROUND (unless otherwise indicated)							
		Prong No. 1	Prong No. 2	Prong No. 3	Prong No. 4	Prong No. 5	Prong No. 6	Prong No. 7	Prong No. 8
6K7	R.F.	0	6.2(1)	250	110	7.5(2)		6.2(1)	7.5(2)
6K7	1st Det.	0	6.2(1)	250	110			6.2(1)	9.0
6C5	Osc.	0	6.2(1)	110				6.2(1)	
6K7	1st I.F.	0	6.2(1)	250	110	7.5		6.2(1)	7.5(2)
6K7	2nd I.F.	0	6.2(1)	250	145	8(2)		6.2(1)	8.0
6H6	2nd Det.	0	6.2(1)					6.2(1)	
6C5	A.V.C.	0	6.2(1)	5(3)				6.2(1)	8.5
6C5	1st A.F.	0	6.2(1)	130				6.2(1)	6.0
6L6	Power	0	6.2(1)	350	250	20(4)		6.2(1)	
5Z4MG	Rectifier	0	5.0(5)		1024(6)		1024(6)		5.0(5)

6G5	Tuning Indicator	Plate to Ground 25(3)	Target to Ground 250	Cathode to Ground 0	Across Heater 6.2 A.C.

(1) A.C. voltage as read across heater terminals 2 and 7.
(2) Subject to variation.
(3) As read with 500,000 ohm meter.
(4) As read across R-30.
(5) A.C. voltage as read across heater terminals 2 and 8.
(6) A.C. voltage as read across terminals 4 and 6.

©John F. Rider, Publisher

MODEL 6D Series
Schematic, Alignment

WELLS-GARDNER & CO.

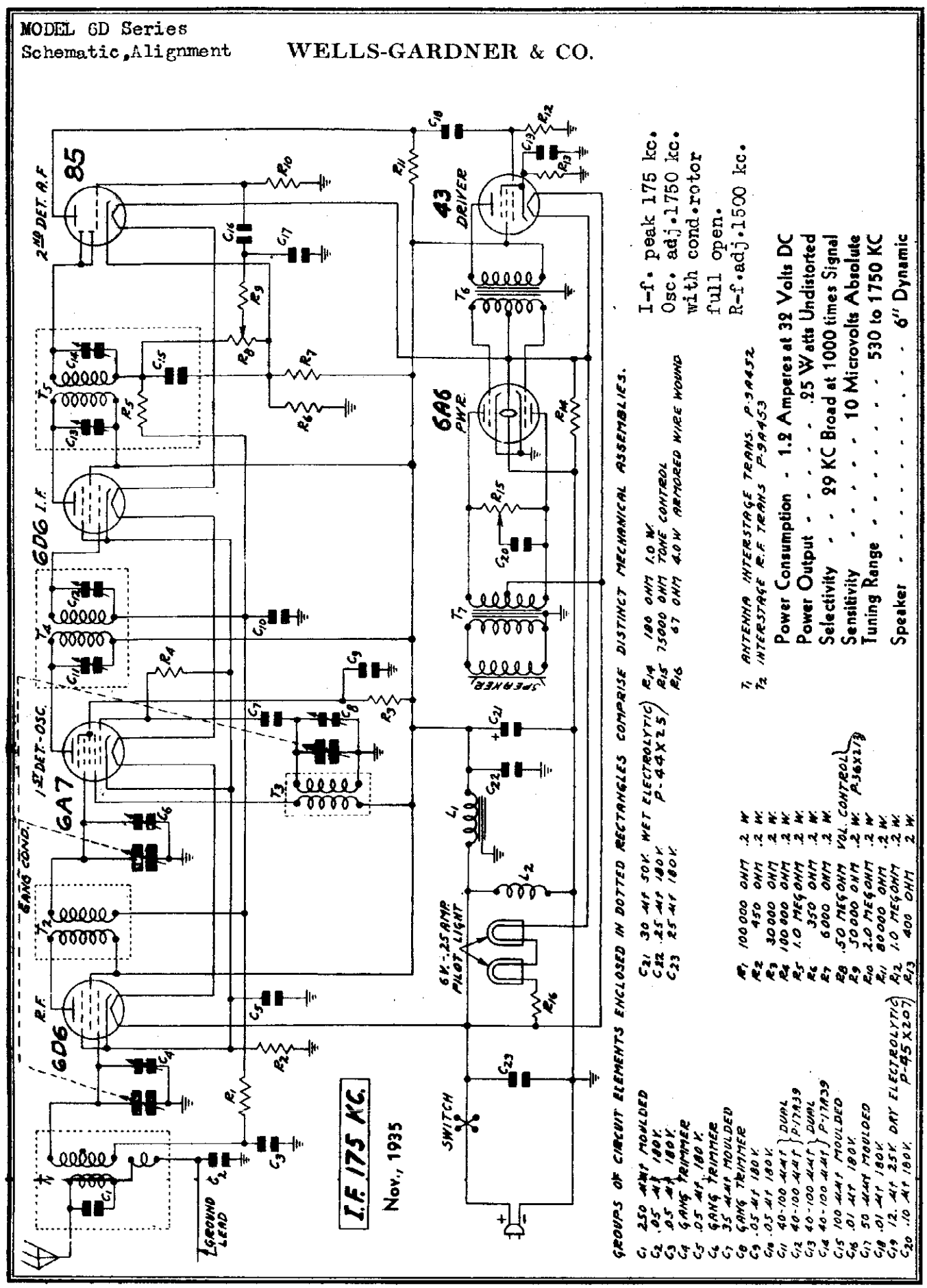

GROUPS OF CIRCUIT ELEMENTS ENCLOSED IN DOTTED RECTANGLES COMPRISE DISTINCT MECHANICAL ASSEMBLIES.

C1 250 MMF MOULDED
C2 .05 MF 180 V.
C3 .05 MF 180 V.
C4 GANG TRIMMER
C5 .05 MF 180 V.
C6 GANG TRIMMER
C7 35 MMF MOULDED
C8 GANG TRIMMER
C9 .05 MF 180 V.
C10 .05 MF 180 V.
C11 40-100 MMF } DUAL
C12 40-100 MMF } P-17439
C13 40-100 MMF } DUAL
C14 40-100 MMF } P-17439
C15 100 MMF MOULDED
C16 .01 MF 180 V.
C17 50 MMF MOULDED
C18 .01 MF 180 V.
C19 12. MF 25 V. DRY ELECTROLYTIC P-45X207
C20 .10 MF 180 V.
C21 30 MF 50 V. WET ELECTROLYTIC } P-44X25
C22 25 MF 180 V.
C23 25 MF 180 V.

R1 100 000 OHM .2 W.
R2 450 OHM .2 W.
R3 30 000 OHM .2 W.
R4 100 000 OHM .2 W.
R5 1.0 MEGOHM .2 W.
R6 350 OHM .2 W.
R7 6000 OHM .2 W.
R8 .50 MEGOHM VOL. CONTROL
R9 50 000 OHM .2 W. P-36X278
R10 2.0 MEGOHM .2 W.
R11 80 000 OHM .2 W.
R12 1.0 MEGOHM .2 W.
R13 400 OHM 2 W.
R14 180 OHM 1.0 W.
R15 75000 OHM TONE CONTROL
R16 67 OHM 4.0 W ARMORED WIRE WOUND

T1 ANTENNA INTERSTAGE TRANS. P-39452
T2 INTERSTAGE R.F TRANS P-39453

Power Consumption - 1.2 Amperes at 32 Volts DC
Power Output - - - - - - - .25 Watts Undistorted
Selectivity - - 9 KC Broad at 1000 times Signal
Sensitivity - - - - - - - 10 Microvolts Absolute
Tuning Range - - - - - - - - 530 to 1750 KC
Speaker - - - - - - - - - - - 6" Dynamic

I-f. peak 175 kc.
Osc. adj. 1750 kc.
with cond. rotor
full open.
R-f. adj. 1500 kc.

©John F. Rider, Publisher

©John F. Rider, Publisher

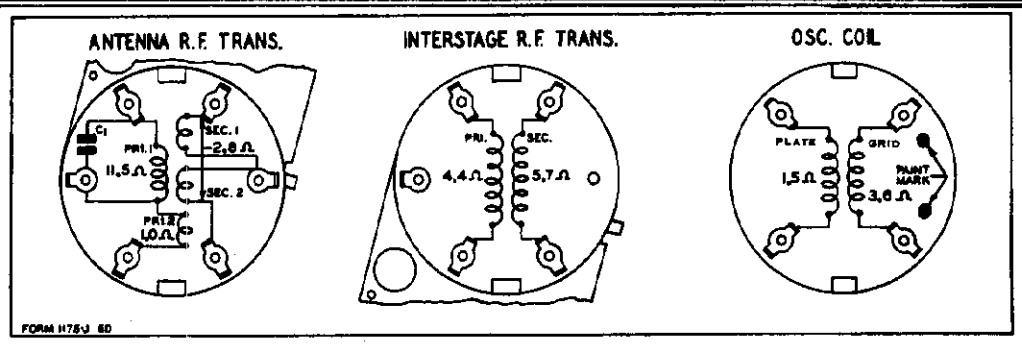

Fig. 3—R.F. and Oscillator Coil Base Terminal Arrangement and D. C. Resistance of Windings

D. C. Resistance of Windings

Refer to Fig. 3

Part No.	Winding	Code	D. C. Resistance in Ohms
P-9A452	Antenna R.F. Transformer	T1	
	Primary No. 1		11.5
	Primary No. 2		1.0
	Secondary Windings in Series		2.8
P-9A453	Interstage R.F. Transformer	T2	
	Primary Winding		4.4
	Secondary Winding		5.7
P-9A454	Oscillator Coil	T3	
	Grid Coil		3.6
	Plate Coil		1.5
P-9A455	1st I.F. Transformer	T4	
	Primary Winding		102.0
	Secondary Winding		99.
P-9A456	2nd I.F. Transformer	T5	
	Primary Winding		101.
	Secondary Winding		102.
P-50X22	Audio Input Transformer	T6	
	Primary Winding		380.
	Secondary Winding		
	Center Tap to Inside		85.
	Center Tap to Outside		95.
P-12A219	Dynamic Speaker		
	Speaker Field	L2	100.
	Speaker Voice Coil		3.1
	Audio Output Transformer (51X23)	T7	
	Primary Winding		
	Center Tap to Inside		152.
	Center Tap to Outside		176.
	Secondary Winding		1.4
P-52X33	Filter Choke	L1	50.

Replacing Drive Cord

Take off the station pointer by removing the screw at the center of the dial.

Remove the pilot lamp assembly by pulling the socket clips upward off the dial assembly.

Loosen the dial assembly by removing the two screws which secure this assembly to the chassis brackets.

Then lay the complete dial assembly face down in front of the chassis. It is not necessary to remove the volume control and tone control collars which hold the indicator cords of these two controls in position.

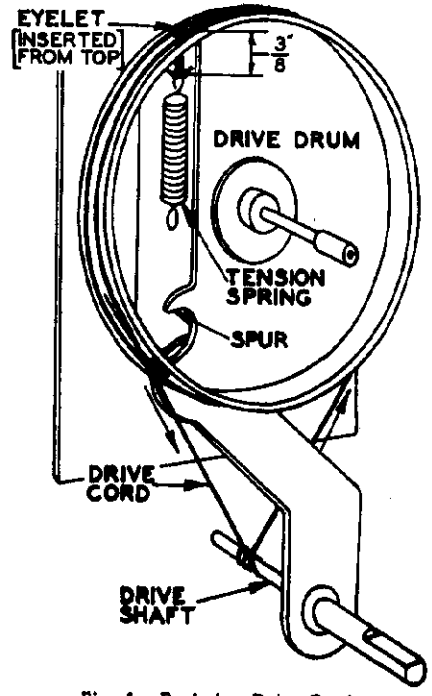

Fig. 6—Replacing Drive Cord

Turn the drive drum until the opening in this drum is approximately vertical and with the hole at the top as shown in Fig. 6.

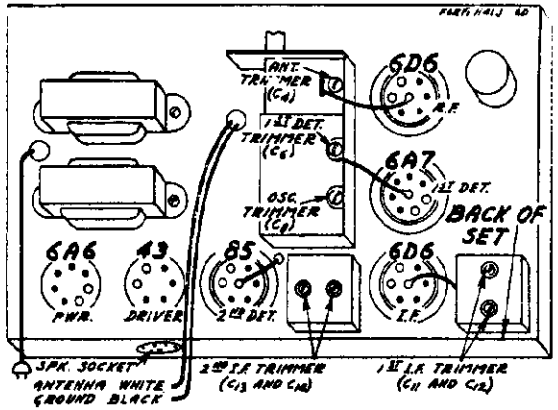

Fig. 4—Tube Arrangement

Remove the tension spring and the old drive cord.

See that the eyelet is in the hole in the drive drum as shown in Fig. 6. Insert one end of the new drive cord from the outside through this eyelet in the drive drum.

Tie the end of the cord which has been inserted through the eyelet to one end of the tension spring.

Wrap the cord in a counter clockwise direction (facing front of chassis) around the drive drum approximately one and one-quarter turns progressing toward the front.

Volume Control at Maximum — Antenna Connected to Ground LEAD

Type of Tube	Function	Across Heater	Plate to Ground	Screen to Ground	Cathode to Ground	Normal Plate MA.
6D6	R.F.	6.4	31	31	2	1.5
6A7	1st Det. & Osc.	6.4	31 31(1)	18	2	.2 .65(1
6D6	I.F.	6.4	31	31	2	1.5
85	2nd Det.	6.4	12.5		18	.20
43	1st Audio	25.6	28	31	3.5	7
6A6	Output	6.4	31		0	11 (per plate)

(1) Anode Grid

MODEL 6F Series
R-F. Chassis
Schematic

WELLS-GARDNER & CO.

Power Consumption - - - - - - - 290 Watts
(At 115 Volts 60 Cycles)

Power Output - - - - - 30 Watts Undistorted

Sensitivity

B Range Average - - -	0.5 Microvolts Absolute
C Range Average - - -	1.0 Microvolts Absolute
D Range Average - - -	2.0 Microvolts Absolute
E Range Average - - -	40.0 Microvolts Absolute

Selectivity - 20 KC Broad at 1000 Times Signal (Sharp)
Intermediate Frequency - - - - - - - - 456 KC

R25	300,000 ohm 0.2 watt	K 9	60 ohm	Armored Wire Wound	T10	"E" Range Osc. Inductor
R26	1.0 megohm Tone Control	R12	10 ohm		T11	Bias and Heater Power Trans.
		R15	2,500 ohm			
R27	2,500 ohm 0.2 watt	R16	4,000 ohm		T12	"B" Power Trans.
R28	30,000 ohm 0.2 watt	R39	130 ohm 2.5 watt armored wire wound		T13	P-P Input Trans.
R29	15,000 ohm 3.0 watt				T14	P-P Output Trans.
R30	50,000 ohm 0.2 watt	T 1	Ant. R.F. Trans.		B 1	Block Cond. and 10 KC Filter
R31	2,000 ohm 0.2 watt	T 2	"E" Range Ant. R.F. Trans.			
R32	2,000 ohm 0.2 watt	T 3	1st Interstage R.F. Trans.		L 1	"E" Range Int. Plate Reactor
R33	200,000 ohm 0.2 watt	T 4	"E" Range Int. R.F. Trans.		L 2	2nd I.F. Plate Isolating Reactor
R34	200,000 ohm 0.2 watt	T 5	2nd Interstage R.F. Trans.		L 3	Osc. Tracking Coil
R35	2,000 ohm 0.2 watt				L 4	Filter Reactor
R36	2,000 ohm 0.2 watt					
R37	150 ohm 0.2 watt					

R 5	100,000 ohm 0.2 watt	C41	.02 mf. 600 V.	C53	30. mf. 400 V. Electrolytic	C21	.05 mf. 180 V.
R 6	100,000 ohm 0.2 watt	C42	.05 mf. 180 V.	C54	30. mf. 400 V. Electrolytic	C22	.25 mf. 480 V.
R 7	100,000 ohm 0.2 watt	C44	.01 mf. 360 V.	C55	500 mmf.	C23	150-250 mmf. Dual
R10	60,000 ohm 1.0 watt	C45	.05 mf. 180 V.	C56	20 mmf.	C24	150-250 mmf. Dual
R11	10,000 ohm 0.5 watt	C46	35 mmf.	C57	.70 mf. 280 V. (Block)	C25	60.0 mf. Electrolytic
R13	60,000 ohm 0.5 watt	C48	.05 mf. 360 V.	C58	.70 mf. 280 V. (Block)	C26	150-250 mmf. Dual
R14	40,000 ohm 0.2 watt	C49	.10 mf. 360 V.			C27	150-250 mmf.
R18	150,000 ohm 0.2 watt	C50	2-25 mmf.			C28	.05 mf. 180 V.
R19	100,000 ohm 0.2 watt	C53	10 mmf.			C29	70-150 mmf.
R20	2.0 ohm 1.0 watt armored wire wound	C54	2-25 mmf.			C30	.10 mf. 480 V.
		C55	1400 mmf.			C31	50.0 mmf.

I.F. 456 KC.

©John F. Rider, Publisher

MODEL 6F Series
A-F. Chassis
Schematic

WELLS-GARDNER & CO.

Tuning Frequency Range

B Range - - - - - - - - - - 535 to 1730 KC
C Range - - - - - - - - - - 1715 to 5800 KC
D Range - - - - - - - - - - 5750 to 18300 KC
E Range - - - - - - - - - - 17500 to 48000 KC

Speaker - - - Two 12 Inch Auditorium Dynamics

ARROWS INDICATE CONNECTIONS PRESENT IN BAND SW. WHEN IN POS. SHOWN.

	POSITION 1 STANDARD WAVE (B)	POSITION 2 SHORT WAVE (C)	POSITION 3 SHORT WAVE (D)	POSITION 4 SHORT WAVE (E)
OSC. SECT. 1 & ANT. SECT.	10 11 12 1 2 3 4 5 6 7 8 9	10 11 12 1 2 3 4 5 6 7 8 9	10 11 12 1 2 3 4 5 6 7 8 9	10 11 12 1 2 3 4 5 6 7 8 9
OSC. SECT. 2	10 11 1 2 3 4 5	10 11 1 2 3 4 5	10 11 1 2 3 4 5	10 11 1 2 3 4 5
INTER. SEC. SECTION	4 5 6 7 8 9	4 5 6 7 8 9	4 5 6 7 8 9	1 5 6 7 8 9
INTER. PRI. SECT. 2	1 2 3 4 5 6	1 2 3 4 5 6	1 2 3 4 5 6	1 2 3 4 5 6
INTER. PRI. SECT. 1	4 5 6 7 9	4 5 6 7 9	4 5 6 7 9	4 5 6 7 9

IN ALL SECT. CONTACT LOCATIONS NOT NUMBERED ARE BLANK EXCEPT CONTACT LOCATION 3 IN OSC. SECT. 1 WHICH IS USED AS A WIRING TERMINAL.

C12	.25 mf. 180 V.	C32	.01 mf. 360 V.	C56	2-25 mmf.	C34	4.0 mf. 250 V. Dry Electro.
C13	.05 mf. 480 V.	C33	.05 mf. 180 V.	C57	2-25 mmf.	C43	16.0 mf. 150 V. Lytic
C14	2-25 mmf.	C35	12.0 mf. 300 V.	C58	60 mf. 150 V.	C47	4.0 mf. 250 V. Block
C15	2-25 mmf.		Electrolytic		Electrolytic		
C16	2-25 mmf.	C36	.10 mf. 360 V.	C59	.63 mf. 180 V.	C52	300-600 mmf. Dual
C17	2-25 mmf.	C37	.02 mf. 360 V.	C60	.35 mf. 280 V.	C51	40-100 mmf.
C18	2-25 mmf.	C38	.005 mf. 360 V.	C61	30. mf. 400 V.		
C19	2-25 mmf.	C39	100 mmf.		Electrolytic	R 1	25,000 ohm 0.2 watt
C20	2-25 mmf.	C40	.50 mf. 180 V.	C62	30. mf. 400 V.	R 3	150 ohm 0.2 watt
					Electrolytic	R 4	500 ohm 0.2 watt

R21	2.0 megohm 0.2 watt	R38	500,000 ohm 0.2 watt	T 6	1st I.F. Trans.	L 5	Filter Reactor
R22	160,000 ohm 0.2 watt	R 2	2,500 ohm Volume	T 7	2nd I.F. Trans.	L 6	Filter Reactor
R23	25,000 ohm 0.2 watt	R 8	2.0 megohm Control	T 8	3rd I.F. Trans.	L 7	Speaker Field 4500 ohm
R24	25,000 ohm 0.2 watt	R17	1.0 megohm	T 9	Osc. Inductors	L 8	Speaker Field 4500 ohm

THE FOLLOWING NOTES APPLY TO THE RADIO FREQUENCY CHASSIS.
GROUPS OF CIRCUIT ELEMENTS ENCLOSED IN DOTTED RECTANGLES COMPRISE DISTINCT MECHANICAL ASSEMBLIES.
"B" AND "S" ON SELECTIVITY CONTROL DENOTES "BROAD" AND "SHARP" RESPECTIVELY.
THE CAPACITY OF "C" SHIELD IS 20 MMF. THE CAPACITY OF "D" & "E" SHIELDS IS 10 MMF. EACH. THE CAPACITY OF "E" SHIELD IS 15 MMF.

MODEL 6F Series
Socket, Trimmers
Coil Data, Phono.
Changes

WELLS-GARDNER & CO., INC.

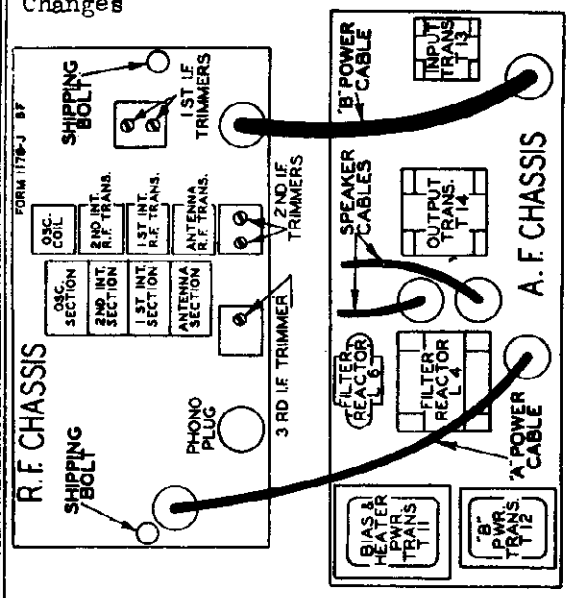

Fig. 1—Top View of Chassis Showing Location of Units

Changes in Early Models

In the early models condenser C65, shown in the R.F. Schematic Fig. 2, was not used. A 20 mmf. condenser, also designated as C65, was connected in parallel with condenser C14.

Condenser C10 from B+ to ground was not used in early models. Another condenser in the early models, also designated as C10 and 250 mmf. in value, was connected from the A.V.C. amplifier plate to ground.

Resistor R38 was not used in early models.

On the A.F. chassis the speaker sockets were wired with ground to the opposite side of voice coil.

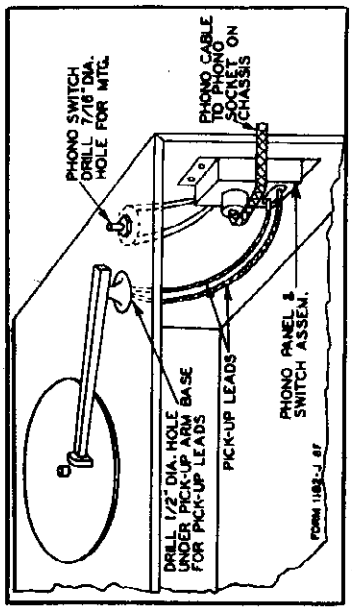

Fig. 14—Phonograph Connections Using Phono Cable and Panel Assembly

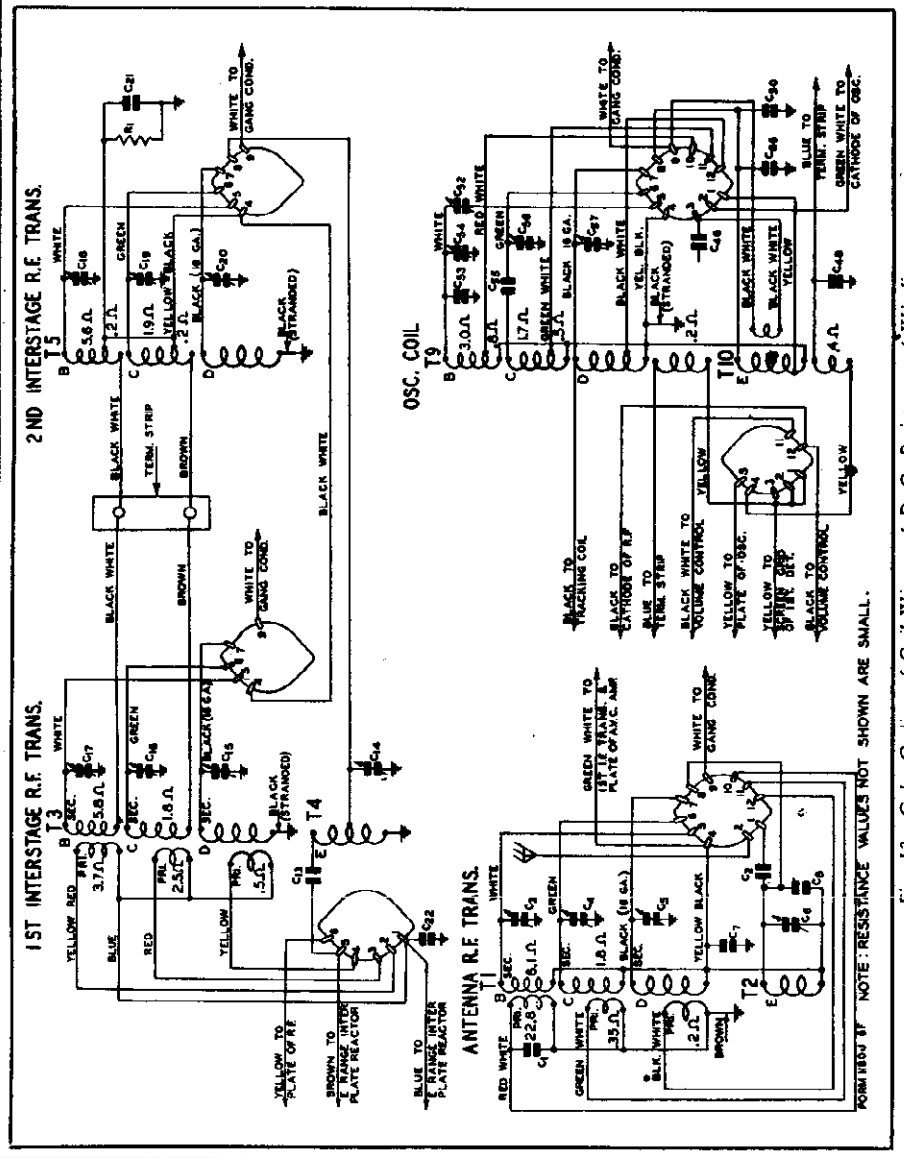

Fig. 12—Color Coding of Coil Wires and D. C. Resistances of Windings

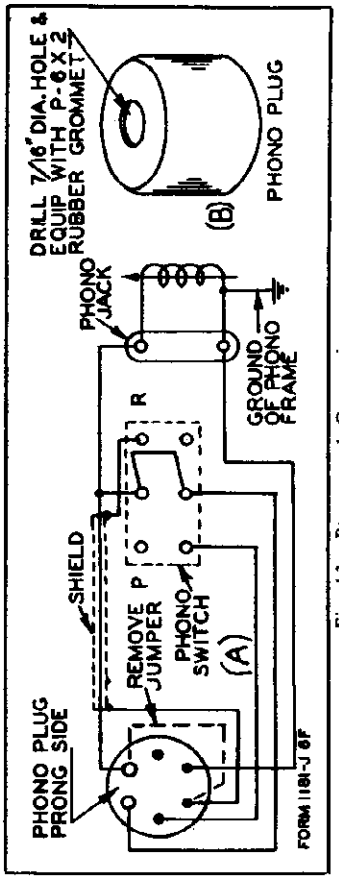

Fig. 13—Phonograph Connections

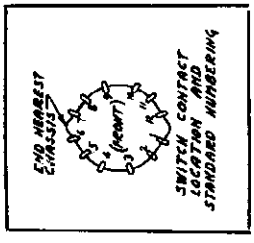

Fig. 9—Numbering of Switch Contacts

©John F. Rider, Publisher

WELLS-GARDNER & CO., INC.

MODEL 6F Series
Voltage, Trimmers
Chassis Views

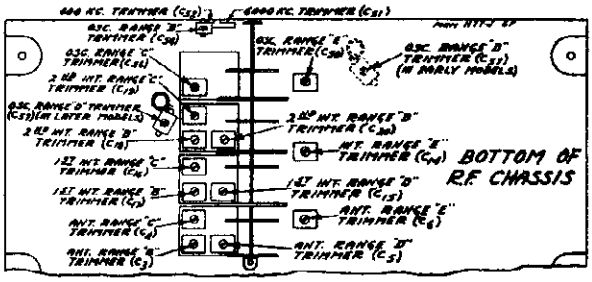

Fig. 6—Trimmer Location

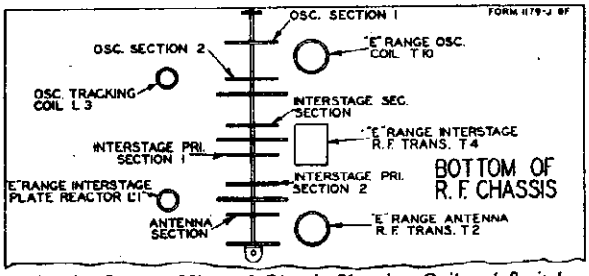

Fig. 5—Bottom View of Chassis Showing Coil and Switch Section Location

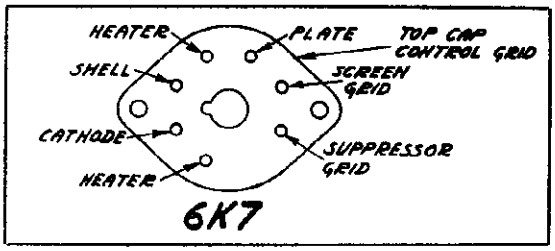

Fig. 7—Bottom View of Metal Tube Socket

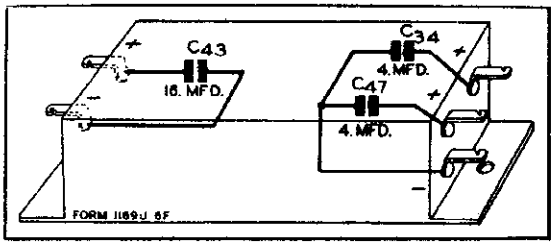

Fig. 8—Condenser Block Internal Wiring

VOLTAGES AT SOCKETS
Antenna Shorted to Ground - Line Voltage 110
Volume Control Maximum

Tube	Function	Across Heater	Plate to Ground	Screen to Ground	Cathode to Ground	Cathode M. A.
6K7	R. F.	5.8	300	110	4.1	10.5
6K7	1st Det.	5.8	300	142	10.0	3.5
76	Osc.	5.8	142			10.0
6K7	1st I. F.	5.8	300	110	4.1	10.5
6K7	2nd I. F.	5.8	300	110	3.7	10.0
6B7	Sig. Diode & Audio Amp.	5.8(1) 5.6(2)	300	115	3.6	4.5
6F7	Bass Amp.	5.8(1) 5.6(2)	275(3) 125(4)	115	7.2	9.0
76	A.V.C. Diode	4.9				
76	A.V.C. Amp.	4.9	0		-62.0	
2A3	Power	2.35	300		-60(5)	60.0(6)
5Z3	'B' Rect.	4.8				375.0(7)
45	Bias Rect.	2.4				

(1) Measured with A. C. Voltmeter—early models with letter "A" under chassis.
(2) Measured with D. C. Voltmeter—later models with letter "B" under chassis.
(3) To Diode Plate
(4) To Plate
(5) Control Grid to ground.
(6) Each Side of push-pull Circuit—120 Ma. total for 4 tubes.
(7) Total for both tubes—Milliameter in series with 1st Choke.

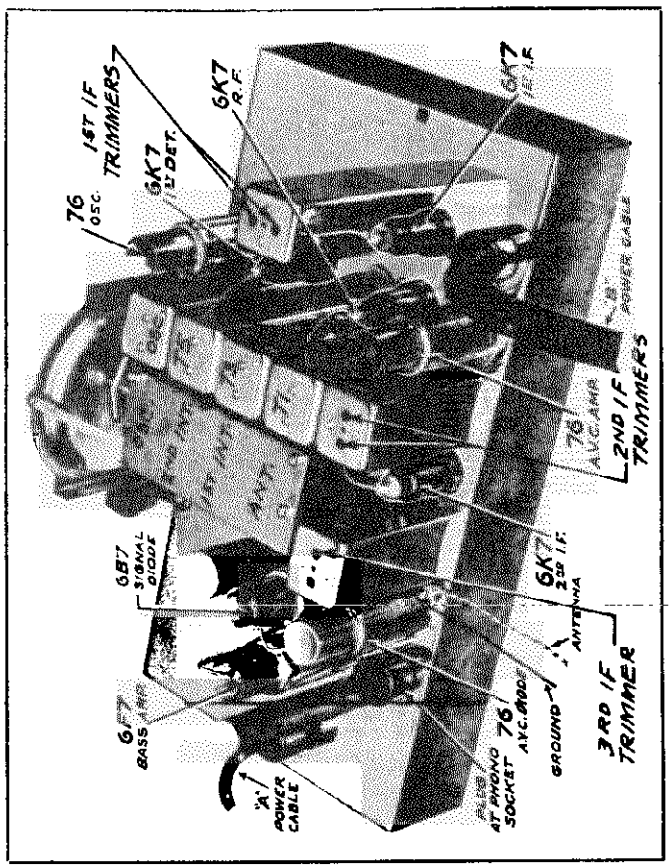

Fig. 10—Tube Arrangement in R.F. Chassis

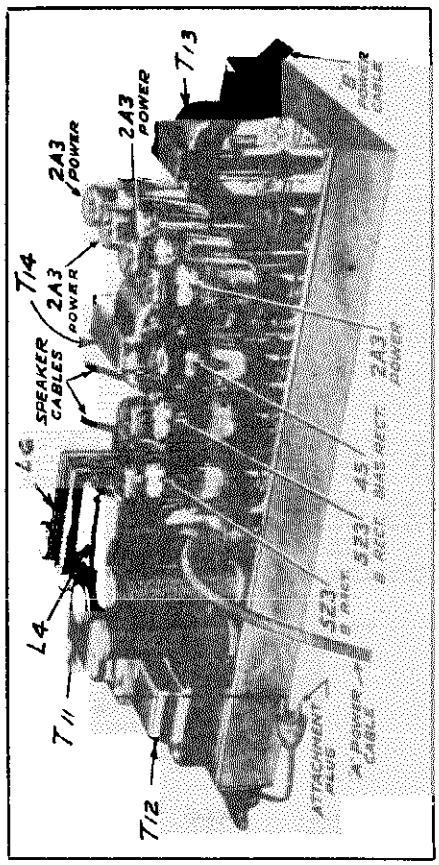

Fig. 11—Tube Arrangement in A.F. Chassis

©John F. Rider, Publisher

MODEL 6F Series
Circuit Data
Alignment

WELLS-GARDNER & CO., INC.

Circuit

This model is a four band receiver with a tuning range in each band as shown in the specifications above. Four band coverage is accomplished by means of four sets of antenna, interstage and oscillator coils and a six section four position switch.

Among the many features incorporated in this receiver are—Improved Automatic Volume Control, Adjustable Selectivity Control, Dual Volume and Sensitivity Control, Bass Compensator and a 30 Watt High Fidelity Audio Amplifier. These are discussed in the following circuit description.

Referring to the R.F. Schematic Fig. 2, the following are the code numbers of the R.F. and Oscillator Assemblies:

T1 —Antenna R.F. Transformer
T2 —B Range Antenna R.F. Transformer
T3 —1st Interstage R.F. Transformer
T4 —B Range Interstage R.F. Transformer
T5 —2nd Interstage R.F. Transformer
T9 —Oscillator Inductors
T10—E Range Oscillator Inductors

The standard wave, 1st, 2nd and 3rd short wave coils in each assembly are indicated by the letters B, C, D and E, respectively. The six sections of the band switch are designated in the R.F. schematic Fig. 2 and in Fig. 5 as the antenna section, interstage primary section 2, interstage primary section 1, interstage secondary section, oscillator section 2 and oscillator section 1.

The band switch completes connections to the coils in use. It also short circuits the antenna R.F. transformer secondaries, the interstage transformer primaries and secondaries and the oscillator coils of lower frequency, not in use.

The antenna transformer with tuned secondary feeds into a type 6K7 R.F. amplifier tube. The output of this tube is fed into a double tuned R.F. stage. The output of the latter actuates the control grid of a 6K7 tube which functions as the 1st detector.

A separate type 76 tube is employed in the oscillator circuit. The oscillating circuit is always resonant at a frequency which is 456 KC above the frequency to which the R.F. amplifier is tuned.

The oscillator potential is fed into the cathode circuit of the 6K7 first detector tube. As a result of the beating of the two frequencies, the intermediate or beat frequency of 456 KC is present in the plate circuit of this tube.

Two stages of I.F. amplification are employed using 6K7 tubes. The primaries and secondaries of the first and second I.F. transformers and the primary of the 3rd I.F. transformer are tuned by small trimmer condensers.

Referring to the 1st and 2nd I.F. transformers T6 and T7 in Fig. 2, it will be noted that there are coupling windings below the primaries.

When the selectivity control is in the sharp position, the coupling winding is open circuited and the loose coupling which exists between the primary and secondary of this transformer results in high selectivity. When the selectivity control is in the broad position, the coupling winding which is wound under the primary is connected in series with the secondary. This provides overcoupling which results in a greatly widened resonance curve. Passage of a wide range of audio frequencies is thus obtained.

A dual manual volume control is employed. In one section the audio voltage applied to the 1st audio tube is varied (R8). In the other section the R.F. and 1st I.F. bias is varied (R2). The purpose of the latter section is to reduce the sensitivity of the receiver at low volume settings in order to cut down noise pick-up between stations. The variable section R2 is shorted out by the band selector switch when it is in the Range D and E positions.

The 3rd I.F. transformer has 2 secondary windings. One of these windings works into the diode section of the 6B7 signal diode. The other winding works into the 76 A.V.C. diode.

The audio voltage developed by the signal diode across volume control resistor R8 is transmitted through the movable arm to the control grid of the pentode section of the 6B7 tube, which acts as a one stage audio amplifier. The pentode plate of this tube is connected through the "B" power cable to one side of the primary of the push-pull input transformer in the power stage.

The audio voltage developed across volume control resistor R8 is also applied through the movable arm to the control grid of the triode section of the 6B7 bass amplifier. A resistance capacity filter composed of condensers C36 and C37 and resistor R14 in the triode plate circuit of this tube bypasses the higher audio frequencies. The lower audio frequencies which pass through this filter develop a voltage across resistors R38, R17 and R18.

R17 is the bass note control and is connected mechanically to the manual volume control. The movable arm is connected to and applies the bass audio voltage to the control grid of the pentode section of the 6F7 bass amplifier. At high volume settings the movable arm is at the low potential end of R17 (near R18). At low volume settings it is at the other end of this resistor in order to increase the bass note response. The reason for the increase in low note response is that the characteristics of the ear are such that the low notes are not heard as well as the middle register notes at lower volume levels.

The plate of the pentode section of the 6F7 tube is connected through the "B" power cable to the other side of the primary of the push-pull input transformer.

The A.V.C. system used in this receiver is one which has a flat characteristic over an extremely wide input range. As mentioned above, it will be seen in Fig. 2 that one of the 3rd I.F. transformer secondary windings works into the 76 A.V.C. diode tube. A signal passing through this transformer will result in a voltage across diode resistor R19. This voltage is applied to the control grid of the 76 A.V.C. amplifier.

Referring now to Figs. 2 and 3, there is a diode circuit consisting of the A.V.C. amplifier voltage winding of power transformer T11 (sixth winding from top) the plate and cathode elements of the 45 bias rectifier tube and resistors R22, R23 and R24. The diode current flowing in this circuit establishes a drop across these resistors. This voltage is below ground and furnishes operating voltages for the 76 A.V.C. amplifier tube which functions as a DC amplifier. Under no signal conditions, the plate of this tube is at ground potential. The grid is at the voltage of the maximum negative voltage end of resistor R23 while the cathode is at the minimum negative voltage end of this resistor. The resulting bias voltage brings this tube below the cut-off point and no plate current flows.

When a signal of a predetermined value or greater flows in the 3rd I.F. transformer, the voltage established across diode resistor R19 reduces the bias voltage of the A.V.C. amplifier to the point at which plate current flows in this tube. The plate current establishes a drop in resistor R25, lowering the plate voltage by the amount of this drop. The plate of the A.V.C. amplifier tube is connected to the control grid circuits of the R.F. and 1st I.F. tubes, resulting in A.V.C. action.

The output stage employs four type 2A3 tubes arranged in push-pull parallel. Fixed bias voltage for these tubes is obtained from a diode circuit in which are the output bias winding of power transformer T11 (fifth winding from top) and the grid and cathode elements of the type 45 bias rectifier tube. 30 watts of undistorted output may be obtained. Two 12" auditorium type dynamic speakers are used. Each speaker is provided with deflecting vanes for the purpose of spreading the directional higher audio notes through the entire room.

Two type 5Z3 tubes connected in parallel are used as "B" power rectifiers in the power unit. There are 2 power transformer assemblies, T11 and T12. In assembly T11 the top 4 windings illustrated in Fig. 3 supply the tube heater and filament voltages and the pilot lamp voltages. As mentioned, the fifth winding supplies the output stage bias voltage and the sixth winding supplies the A.V.C. amplifier tube voltages. Assembly T12 supplies the "B" voltage.

To reduce hum, DC is used in the heater circuits of the 6F7 and 6B7 tubes. The 2 heaters are connected in series in the negative "B" line.

The 45 bias rectifier tube, mention of which has already been made, has two functions. The cathode and grid elements act as a diode supplying bias voltage for the output tubes. The cathode and plate elements act as a diode supplying operating voltages for the A.V.C. amplifier. The two associated transformer windings must be in phase and wired as per the color code in the A.F. Schematic, Fig. 3.

The phono short circuiting plug, which is in the phono socket completes the signal diode circuit connections. Phonograph circuit connections are explained in the article under that name in this manual.

Metal Tubes

One type of the new metal tubes is used in this receiver, namely the 6K7. This replaces the type 6D6 glass tube. This metal tube operates at the same voltages and is nearly identical in characteristics to the corresponding glass tube which it replaces. In Fig. 7 are shown the metal tube pin positions from a bottom socket view.

The shells of metal tubes get quite hot and users should be cautioned against touching them.

Phonograph Connections

A phonograph socket is provided on the R.F. chassis by means of which phonograph connections can be made without electrical changes in the chassis. The receiver is shipped from the factory with a plug in this socket. If no phonograph is used this plug must be inserted as it completes the signal diode circuit for radio reception.

Two sets of accessories are supplied for phonograph connections for this model. One set is used when the phonograph is contained in a separate cabinet, and the other set is used when the phonograph and radio are in a combination cabinet. The electrical connections are the same in both cases and are illustrated in Fig. 13 (A). Parts required in either case are shown in the parts list in this manual.

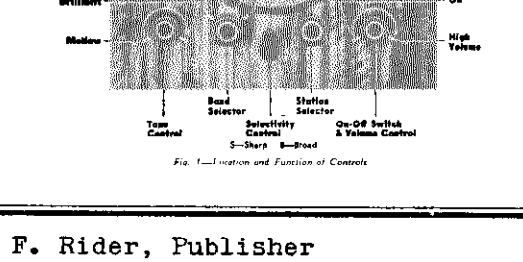

Fig. 1—Location and Function of Controls

Phonograph in Separate Cabinet

For this assembly, a 5 conductor cable and a small metal panel assembly are supplied. This assembly has the radio-phono switch, tip jacks for pick-up leads and terminal plate for phono cable.

The phono panel is mounted at the most convenient place in the cabinet at which connections can be completed. The switch is secured to the motor board as illustrated in Fig. 14.

The socket at the end of the cable is secured to the terminal plate on the panel and the plug at the other end of the cable is inserted into the phono socket on the R.F. chassis.

When the switch is thrown to the radio side, the phono pick-up is excluded from the signal diode circuit. When it is thrown to the phono side, the signal diode circuit is opened and the phonograph connections completed to this circuit. Resistor R23 is short circuited. This brings the grid and cathode of the 76 A.V.C. amplifier to the same potential and causes a plate current in this tube of sufficient intensity to bring the R.F. and 1st I.F. tubes to the point of cut off (See article on circuit for further information regarding operation of A.V.C. system).

Phonograph and Radio in Combination Cabinet

For this assembly, a number of separate items as shown in the parts list are supplied. The phono short circuiting plug supplied with the receiver is used after certain changes have been made.

First take off the shell of this plug by twisting the shell in either direction. The shell is then drilled and equipped with a rubber grommet as shown in Fig. 13 (B). Next unsolder and remove the jumper wire from the plug as shown in Fig. 13 (A). Extend the leads through the hole in the shell and solder the leads to the prongs on the plug as illustrated. Complete the connections to the switch and tip jacks as shown. The switch is mounted on the motor board and the tip jacks at the nearest convenient place.

The description of the connections as given for the separate phonograph cabinet also applies to the combination.

Alignment and Calibration

Correct alignment is extremely important in connection with all-wave receivers. The receivers are all properly aligned at the factory with precision instruments and realignment should not be attempted unless all other possible causes of the faulty operation have first been investigated and unless the service technician has the proper equipment.

A signal generator that will provide an accurately calibrated signal at 456, 1730, 1500, 600, 1800, 5000, 18,300, 15,000, 6000, 48,000 and 40,000 KC and an output indicating meter are required. It will be practically impossible to align the receiver if unsatisfactory apparatus is used. If a station is tuned in with the selectivity control in the broad position and this control is then turned to the sharp position, the station may disappear. This is not an indication that the receiver is out of alignment.

Use a non-metallic screwdriver for the adjustments. The complete procedure is as follows:

I. F. Adjustment

Set the signal generator for a signal of 456 KC.

Connect the output of the signal generator to the grid of the 1st detector through a 0.1 mf. condenser.

Connect the ground lead of the receiver to the ground post of the signal generator.

Turn the band selector to the Range B position (standard wave band—purple dial color).

Turn the selectivity control to the sharp position and keep it in this position for all adjustments.

Turn the volume control to the maximum position.

Attenuate the signal from the signal generator to prevent the levelling-off action of the A.V.C.

Then adjust the five I.F. trimmers until maximum output is obtained. The adjusting screws for these condensers are reached from the top of the chassis, and the location is shown in Fig. 4.

Range B Alignment

1730 KC Adjustment

Set the signal generator for 1730 KC.

Turn the rotor of the tuning condenser to the full open position.

Keep the band selector in the standard wave position.

Connect the antenna lead of the receiver through a 200 mmf. condenser to the output of the signal generator.

For this and all subsequent adjustments keep the volume control at the maximum position and attenuate the signal from the signal generator to prevent A.V.C. action.

Adjust the oscillator Range B trimmer (C54) until maximum output is obtained. The location of this trimmer is shown in Fig. 6.

1500 KC Adjustment

Set the signal generator for 1500 KC.

Turn the rotor of the tuning condenser carefully until maximum output is obtained.

Loosen the pointer set screw and set the large pointer at the 1500 KC mark on the standard wave band scale. Re-tighten the set screw.

Adjust the 1st and 2nd interstage Range B trimmers (C17 and C18) and antenna Range B trimmer (C3) to maximum.

Do not change the setting of the oscillator Range B trimmer.

600 KC Adjustment

Set the signal generator for 600 KC.

Turn the tuning condenser rotor until maximum output is obtained.

Turn the rotor slowly back and forth at the same time adjusting the 600 KC trimmer until the peak of greatest intensity is obtained. See Fig. 6 for location of this trimmer.

Be sure to use a non-metallic screwdriver for this adjustment.

Range C Alignment

5800 KC Adjustment

Set the signal generator for 5800 KC.

Connect the antenna lead of the receiver through a 400 ohm resistor to the output of the signal generator.

Turn the rotor of the tuning condenser to the full open position.

Turn the band selector to the Range C position (1st short wave band—green dial color).

As mentioned above, keep the volume control at the maximum position and attenuate the signal from the signal generator to prevent A.V.C. action.

Adjust the oscillator Range C trimmer (C56) until maximum output is obtained. See Fig. 6 for location of this trimmer.

5000 KC Adjustment

Set the signal generator for 5000 KC.

Turn the rotor of the tuning condenser carefully until maximum output is obtained.

Adjust the 1st and 2nd interstage Range C trimmers (C16 and C19) and antenna Range C trimmer (C4) to maximum.

Do not change the setting of the oscillator Range C trimmer.

Range D Alignment

18,300 KC Adjustment

Set the signal generator for 18,300 KC.

Keep the antenna lead of the receiver connected through the 400 ohm resistor to the output of the signal generator.

Turn the rotor of the tuning condenser to the full open position.

Turn the band selector to the Range D position (2nd short wave band—red dial color).

As mentioned above, keep the volume control at the maximum position and attenuate the signal from the signal generator to prevent A.V.C. action.

Adjust the oscillator Range D trimmer (C57) until maximum output is obtained. See Fig. 6 for location of this trimmer.

15,000 KC Adjustment

Set the signal generator for 15,000 KC. Turn the rotor of the tuning condenser carefully until maximum output is obtained.

Adjust the 1st and 2nd interstage Range D trimmers (C15 and C20) and antenna Range D trimmer (C5) to maximum.

When adjusting the 2nd interstage Range D trimmer, it will be necessary at the same time to turn the tuning condenser rotor slowly back and forth until the peak of greatest intensity is obtained.

Then go back and repeat the procedure as given for the 18,300 KC adjustment. If it is found necessary to make any appreciable change in the setting of the oscillator Range D trimmer, the 15,000 KC adjustment must be re-seated.

Do not make any further change in the setting of the oscillator Range D trimmer.

6000 KC Adjustment

Set the signal generator for 6000 KC.

Turn the tuning condenser rotor until maximum output is obtained.

Turn the rotor slowly back and forth at the same time adjusting the 6000 KC trimmer until the peak of greatest intensity is obtained. See Fig. 6 for location of this trimmer.

Use a non-metallic screwdriver for this adjustment.

Range E Alignment

48,000 KC Adjustment

Set the signal generator for 48,000 KC.

Keep the antenna lead of the receiver connected through the 400 ohm resistor to the output of the signal generator.

Turn the rotor of the tuning condenser to the full open position.

Turn the band selector to the Range E position (3rd short wave band—brown dial color).

Adjust the oscillator Range E trimmer (C58) until maximum output is obtained. See Fig. 6 for location of this trimmer.

40,000 KC Adjustment

Set the signal generator for 40,000 KC.

Turn the rotor of the tuning condenser carefully until maximum output is obtained.

Adjust the interstage Range E trimmer (C14) and antenna Range E trimmer (C6) to maximum.

Do not change the setting of the oscillator Range E trimmer.

Switch Contact Location Numbering

A standard arrangement for switch contact location numbering has been adopted. This numbering is illustrated in Fig. 9. In contact locations not used, the number applying to that particular location is not employed.

Twenty-five Cycle Receivers

The twenty-five cycle receiver differs from the sixty cycle receiver in the fact that special twenty-five cycle filament and "B" power transformers must be used. It also has two additional condensers in the power unit—C67 and C68 as illustrated in Fig. 3. The twenty-five cycle transformers and the condensers are shown in the parts list.

The twenty-five cycle receiver can be operated satisfactorily from a sixty cycle power supply if the two condensers C67 and C68 are removed. However, the reverse is not true, that is, a sixty cycle receiver cannot be operated from a twenty-five cycle power supply.

115-230 Volt, 40 to 60 cycle filament and "B" power transformers are also available for this model.

©John F. Rider, Publisher

MODEL 6F Series
Resistance
Parts

WELLS-GARDNER & CO.

TRANSFORMERS AND COILS

New Part No.	Code	Winding	List Price
P-9A428	T1	Antenna R.F. Transformer and Can Assembly	$4.05
P-9A435	T2	"E" Range Antenna R.F. Coil Assembly	.85
P-9A429	T3	1st Interstage R.F. Transformer and Can Assembly	3.40
P-9A436	T4	"E" Range Interstage R.F. Coil Assembly	.60
P-9A430	T5	2nd Interstage R.F. Coils Assembly	3.50
P-9A432	T6	1st I.F. Transformer and Can Assembly	3.05
P-9A433	T7	2nd I.F. Transformer and Can Assembly	3.05
P-9A434	T8	3rd I.F. Transformer and Can Assembly	3.00
P-9A431	T9	Oscillator Coils and Can Assembly	3.50
P-9A437	T10	"E" Range Oscillator Coil Assembly	1.00
*P-53X88	T11	Filament Transformer (115 Volt - 60 Cycle)	6.85
*P-53X186		Filament Transformer (115 Volt - 25 Cycle)	13.30
*P-53X104		Filament Transformer (115-230 Volt; 40-60 Cycle)	11.50
*P-53X85	T12	"B" Power Transformer (115 Volt - 60 Cycle)	8.65
*P-53X105		"B" Power Transformer (115-230 Volt; 40-60 Cycle)	15.00
*P-53X107		"B" Power Transformer (115 Volt - 25 Cycle)	17.50
*P-50X25	T13	Audio Input Transformer	5.35
*P-51X33	T14	Audio Output Transformer	6.65
P-9A391	L1	"E" Range Interstage Plate Reactor	.25
P-9A450	L2	2nd I.F. Plate Isolating Reactor	.55
P-9A391	L3	High Frequency Oscillator Tracking Coil	.25
*P-52X35	L4	Filter Reactor	8.45
*	L5	10 KC Reactor (Part of P-48X201)	.85
*P-52X36	L6	Filter Reactor	3.55
*P-48X201	B1	Block Condenser (C59 & C60) and 10 KC Reactor—(L5) Assembly	2.35

*These items are part of the A.F. Chassis. All others are on R.F. Chassis.

DIAL AND DRIVE ASSEMBLY

New Part No.	Old Part No.	Description	List Price
		Dial Assembly Complete Less Large Pointers, less Pilot Lamp Sockets and Bulbs	$5.75
P-28X35		Gear Spreader Springs Only	.10
P-28X49		Tension Pulley Spring Only	.10
P-8X36		Drive Belt	.20
P-28X45		Pointer Slide Take-up Spring	.10
P-10X9		4 Inch Indicator Cords doz.	.10
P-29X51		Brass Collars and Set Screws only for securing above Drive Cords to Shaft	.20
		Dial Strip Only (Specify Series No. and Name of Receiver)	.65
P-30X43		Dial Clamp to secure Dial Strip to Frame (with 6-32 x 3/16" Mounting Screw)	.10
		Double End Pointer (Specify Series No. and Name of Receiver)	.10
P-15X26		Micrometer Pointer	.10
P-7A26	2012	Pilot Lamp Bulb (6 - 8V)	.15
P-7A34		Pilot Lamp Sockets and Spring Clip	.15

PHONO ATTACHMENT PARTS

(The following parts are recommended for use when Radio and Phonograph are in separate cabinets)

The first two items only are required

New Part No.	Old Part No.	Description	List Price
P-13X228		Phono Cable (20 feet long)	$5.25
P-13A7		Phono Panel and Switch Assembly Complete	4.15
		The following items are part of the phono panel and switch assembly (P-13A7) listed above and may be purchased separately:	
P-25X263		Phono Attachment Panel Only	2.40
P-2A50		Phono Switch	.60
P-3A12	1193	Phono Jack	.10
P-6A205		6 Prong Phono Cable Pin Plate	.10
P-19X6	20351	Flat Washers	.10
P-10A36	2122	Switch Knob	.20

(The following parts are recommended for use when Radio and Phonograph are in the same cabinet)

The first item only is required

P-13A8		Complete Phono Kit (includes all following parts)	1.20
P-6X2	10153	Rubber Grommet	.10
P-2A50		Phono Switch	.60
P-3A12	1193	Phone Jack	.10
P-10A36	2122	Switch Knob	.20
5 Ft.		Shielded Hook-up Wire	.20

Prices Subject to Change Without Notice.

D. C. Resistance of Windings
Refer to Figs. 12, 2 & 3.

Part No.	Winding	Code	D. C. Resistance in Ohms
P-9A428	Antenna R.F. Transformer	T1	
	Range B Primary Winding		22.8
	Range C Primary Winding		0.35
	Range D Primary Winding		0.2
	Range B Secondary Winding		6.1
	Range C Secondary Winding		1.8
	Range D Secondary Winding		Small
P-9A435	"E" Range Antenna R.F. Coil	T2	Small
P-9A429	1st Interstage R.F. Transformer	T3	
	Range B Primary Winding		3.7
	Range C Primary Winding		2.5
	Range D Primary Winding		0.5
	Range B Secondary Winding		5.8
	Range C Secondary Winding		1.8
	Range D Secondary Winding		Small
P-9A436	"E" Range Interstage R.F. Coil	T4	
	Tap to either side		Small
P-53X85	"B" Power Transformer (115 Volts 60 Cycles)	T12	
	Primary Winding		1.9
	Secondary Winding		
	Center Tap to Inside		48.0
	Center Tap to Outside		53.1
P-50X25	Audio Input Transformer	T13	
	Primary Winding		
	Tap to Plate of 6F7		6600.
	Tap to Tone Control and Plate of 6B7		4650.
	Secondary Winding		
	Center Tap to Inside		2840.
	Center Tap to Outside		3260.
P-51X33	Audio Output Transformer	T14	
	Primary Winding		
	Center Tap to Inside		19.7
	Center Tap to Outside		22.4
	Secondary Winding		0.4
P-12A206	12" Dynamic Speaker		
	Speaker Voice Coil		6.3
	Speaker Field	L7	4500.
P-12A213	12" Dynamic Speaker		
	Speaker Voice Coil		6.3
	Speaker Field	L8	4500.
P-9A391	"E" Range Interstage Plate Reactor	L1	1.0
P-9A450	2nd I.F. Plate Isolating Reactor	L2	35.0
P-9A391	High Frequency Oscillator Tracking Coil	L3	1.0
P-52X35	Filter Reactor	L4	51.6
P-52X36	Filter Reactor	L6	11.2
P-48X201	Block Condenser & 10 KC Reactor Assembly	B1	
	10 KC Reactor	L5	0.6
P-9A430	2nd Interstage R.F. Coils	T5	
	Range B Section		
	Long Portion		5.6
	Short Portion		0.2
	Range C Section		
	Long Portion		1.9
	Short Portion		0.2
	Range D Section		Small
P-9A432	1st I.F. Transformer	T6	
	Primary Winding		4.4
	Coupling Winding		0.3
	Secondary Winding		
	Tap to Condenser Side		3.0
	Tap to Switch Side		1.3
P-9A433	2nd I.F. Transformer	T7	
	Primary Winding		4.4
	Coupling Winding		0.3
	Secondary Winding		
	Tap to Condenser Side		3.0
	Tap to Switch Side		1.3
P-9A434	3rd I.F. Transformer	T8	
	Primary Winding (Yellow to Blue)		9.7
	Signal Diode Secondary		12.4
	A.V.C. Secondary (Brown to Green)		7.0
P-9A431	Oscillator Coils	T9	
	Range B Grid Coil		
	Red-White tap to White		3.0
	Red-White tap to Black-Yellow		0.8
	Range C Grid Coil		
	Green-White tap to Green		1.7
	Green-White tap to Black-Yellow		0.5
	Range D Grid Coil		
	Black-White tap to Black		Small
	Black-White tap to Black-Yellow		Small
	Oscillator Range D Plate Coil		0.2
P-9A437	"E" Range Oscillator Coils	T10	
	Range E Grid Coil		Small
	Range E Plate Coil		.4
	Range E Series Grid Coil		Small
P-53X88	Filament Transformer (115 Volts 60 Cycles)	T11	
	Primary Winding		4.4
	Filament Transformer Secondaries, below		
	Red to Red		Small
	Black to Black		Small
	Yellow to Yellow		Small
	Green to Green		Small
	Black to White		22.8
	Red-White to Red		32.9

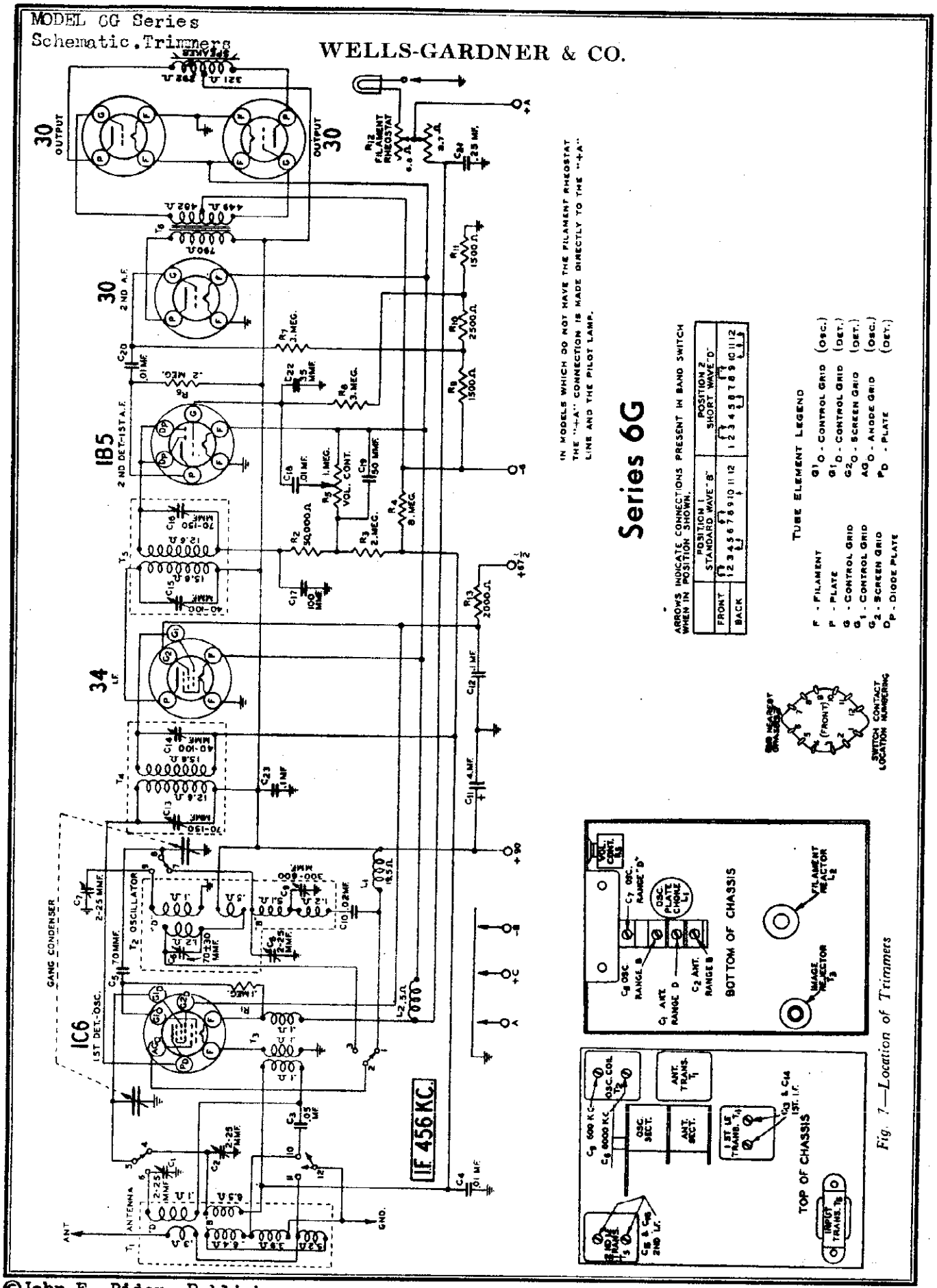

Fig. 7—Location of Trimmers

©John F. Rider, Publisher

MODEL 6G Series
Voltage, Alignment
Socket, Coil Data
Parts List

WELLS-GARDNER & CO., INC.

Standard and Short Wave Battery Radio July 1936

Series 6G

6 Tube - 2 Band

Tubes

The tubes used in this receiver are of the 2 volt series. All of them are of the filament or directly heated types. All of them have a 2 volt filament and should not be connected to a power supply not intended for this type of tube. **Maximum filament voltage range is 1.8 to 2.0 volts. Operation of the tubes at under or over this value will be injurious to the tubes and may affect operation of the receiver.**

VOLTAGES AT SOCKETS

Volume Control at Maximum Antenna Shorted to Ground
Band Switch in Standard Wave Position

Type of Tube	Function	Across Filament	Plate to Ground	Screen to Ground	Grid to Ground
1C6	1st Det.-Osc.	2.0	90 90(1)	60	6(2)
34	I.F.	2.0	90	60	6(2)
1B5	2nd Det.-1st A.F.	2.0	30(3)		1.5(4)
30	2nd A.F.	2.0	90		4.0(5)
30	Power	2.0	90		6

(1) Anode Grid to ground.
(2) As read at "C" Battery
(3) As read with 500,000 ohm meter.
(4) As read from negative end of R11 to ground.
(5) As read from negative end of R10 to ground.

Alignment Procedure

Correct alignment is extremely important in connection with all wave receivers. The receivers are all properly aligned at the factory with precision instruments and re-alignment should not be attempted unless all other possible causes of the faulty operation have first been investigated and unless the service technician has the proper equipment.

A signal generator that will provide an accurately calibrated signal at 456, 1730, 1500, 600, 16,000, 15,000 and 6000 KC and an output indicating meter are required. It will be practically impossible to align the receiver if unsatisfactory apparatus is used.

Use a non-metallic screwdriver for the adjustments. The complete procedure is as follows:

I. F. Adjustment

Set the signal generator for a signal of 456 KC.

Connect the output of the signal generator through a .1 mf. condenser to the grid of the 1st detector.

Connect the ground lead of the radio to the ground post of the signal generator.

Turn the band switch to the Range B position (standard wave band).

Turn the volume control to the maximum position.

Attenuate the signal from the signal generator to prevent the levelling-off action of the AVC.

Then adjust the four I.F. trimmers until maximum output is obtained. The adjusting screws for these condensers are reached from the top of the chassis, and the location is shown in Fig. 7.

Range B Alignment

After the procedure for the alignment of each range, as explained below, is completed, it is advisable to repeat the procedure as a final check.

1730 KC Adjustment

Set the signal generator for 1730 KC.

Turn the rotor of the tuning condenser to the full open position.

Keep the band switch in the standard wave position.

Connect the antenna lead of the radio through a 200 mmf. condenser to the output of the signal generator.

For this and all subsequent adjustments keep the volume control at the maximum position and attenuate the signal from the signal generator to prevent AVC action.

Adjust the oscillator Range B trimmer (C8) until maximum output is obtained. The location of this trimmer is shown in Fig. 7.

1500 KC Adjustment

Set the signal generator for 1500 KC.

Turn the rotor of the tuning condenser carefully until maximum output is obtained.

Loosen the pointer screw and set the pointer at the 1500 KC mark on the standard wave band scale. Retighten the screw.

Adjust the antenna Range B trimmer (C2) to maximum.

Do not change the setting of the oscillator Range B trimmer.

600 KC Adjustment

Set the signal generator for 600 KC.

Turn the tuning condenser rotor until maximum output is obtained.

Turn the rotor slowly back and forth at the same time adjusting the 600 KC trimmer (C9) until the peak of greatest intensity is obtained. See Fig. 7 for location of this trimmer.

Range D Alignment

CAUTION—When aligning the short wave band be sure NOT to adjust at the image frequency. This can be checked as follows: Let us say the signal generator is set for 15,000 KC. The signal will then be heard at 15,000 on the dial of the radio. The image signal, which is much weaker, will be heard at 15,000 less 912 KC, or 14,088 KC. It may be necessary to increase the input signal to hear the image.

16,000 KC Adjustment

Set the signal generator for 16,000 KC.

Connect the antenna lead of the radio through a 400 ohm resistor to the output of the signal generator.

Turn the rotor of the tuning condenser to the full open position.

Turn the band switch to the Range D position (short wave band).

Adjust the oscillator Range D trimmer (C7) until maximum output is obtained. See Fig. 7 for location of this trimmer.

15,000 KC Adjustment

Set the signal generator for 15,000 KC.

Turn the rotor of the tuning condenser carefully until maximum output is obtained.

Adjust the antenna Range D trimmer (C1) to maximum. When adjusting this trimmer, it will be necessary at the same time to turn the tuning condenser rotor slowly back and forth until the peak of greatest intensity is obtained.

Do not change the setting of the oscillator Range D trimmer.

6000 KC Adjustment

Set the signal generator for 6000 KC.

Turn the tuning condenser rotor until maximum output is obtained.

Turn the rotor slowly back and forth at the same time adjusting the 6000 KC (C6) trimmer until the peak of greatest intensity is obtained. See Fig. 7 for location of this trimmer.

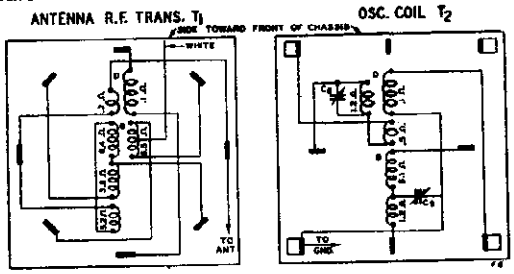

Fig. 8—R.F. and Oscillator Coil Base Terminal Arrangement and D.C. Resistance of Windings

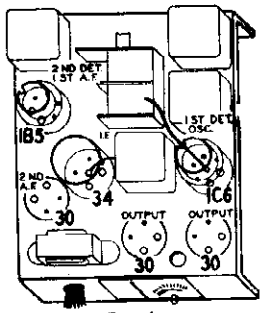

Fig. 9—Tube Arrangement

Replacement Parts

NOTICE—There is a large letter on the chassis which identifies the set as to major part changes. When ordering parts, please be sure to mention the series number and this large letter.

ELECTROLYTIC

P-4BX212	C11	4.0 mf.	180 Dry	.65

MOLDED

P-47X62	C5	70 mmf.	.10
P-47X57	C17	100 mmf.	.10
P-47X56	C19	50 mmf.	.10
P-47X55	C22	35 mmf.	.10

TRIMMER

P-17AS2	C1, C2, C7, C8	2-25 mmf. Range "D" Antenna Trimmer; 2-25 mmf. Range "B" Antenna Trimmer; 2-25 mmf. Range "D" Oscillator Trimmer; 2-25 mmf. Range "B" Oscillator Trimmer	.45
P-17AJ6	C6	40-100 mmf. 6000 KC Trimmer	.45
	C9	300-600 mmf. 600 KC Trimmer	
P-17AS1	C13	70-150 mmf. 1st I. F. Trimmer	.35
	C14	85-180 mmf.	
P-17AS1	C15	70-150 mmf. 2nd I. F. Trimmer	.35
	C16	85-180 mmf.	

MISCELLANEOUS

P-14AS4		2 Gang Condenser less Drive Drum and Dial Assembly		$3.00
P-A9184	R1	100,000 Ohm	0.2	.30
P-A9200	R2	50,000 Ohm	0.2	.30
P-A9208	R3	2.2 Megohm	0.2	.30
P-A9205	R4	0.5 Megohm	0.2	.30
P-A9204	R5	200,000 Ohm	0.2	.30
P-A9209	R7	2.2 Megohm	0.2	.30
P-A9188	R8	2.2 Megohm	0.2	.30
P-A9182	R9	1,500 Ohm	0.5	.30
P-A9253	R10	2,500 Ohm	0.2	.30
P-A9152	R11	1,500 Ohm	0.2	.30
P-A9282	R13	2,000 Ohm	0.2	.30
P-4AX80	C3	.05 mf.	180	.30,35
P-4AX108	C4	.01 mf.	180	.30
P-4AX107	C10	.02 mf.	180	.30
P-4AX90	C12	.1 mf.	180	.30
P-4AX124	C18	.01 mf.	180	.30
P-4AX124	C20	.01 mf.	180	.30
P-4AX117	C21	.25 mf.	180	.35
P-4AX98	C23	.1 mf.	180	.30

Part No.		Description	List Price
P-5A17		Drive Bracket Assembly, less Drive Drum and Pointer Shaft	$0.30
P-24X225		Drive Drum and Pointer Shaft (Mounted on Tuning Condenser Shaft)	.45
		20" Black Tuning Drive Cord	doz. .40
P-28X27		Tuning Drive Cord Tension Spring	.10
		8" On-Off Indicator Drive Cord	doz. .30
P-29X30		Brass Collar with Set Screw for Securing above Cord to Shaft	.10
P-28X44		On-Off Indicator Cord Tension Spring	.10
P-34X218	R5	1.0 Megohm Volume Control and On-Off Switch	1.85
*P-42X86	R12	0.7 Ohm / 2.3 Ohm Filament Rheostat	.50
P-2AS4	30	Tube Socket	$0.10
P-1AS8	34	Tube Socket	.10
P-5AX239	1B5	Tube Socket	.15
P-5AX85	1C6	Tube Socket	.10

SPEAKERS

P-12AX217	6"	Magnetic Speaker	4.35
P-12AX218	8"	Magnetic Speaker	4.60
P-12X212		Speaker Cable and Socket Assembly	.60

KNOBS

Specify Name and Model of Receiver	Volume Control Knob Tuning Control Knob Band Switch Knob	.15 .15 .15

GENERAL

P-40X23		Rubber Chassis Mounting Cushion	.10
P-32X49		Tube Shield—Large	.20
P-32X32		Tube Shield—Small	.15
P-32X18		Tube Shield Base—Large	.10
P-32X30		Tube Shield Base—Small	.10
P-2X38		Felt Washers (Used behind Knobs)	ea. .10
P-17X16		Glass Dial Crystal	.30
P-20X67		Crystal Retaining Ring	.10
P-3AX8		1 Section, 2 Position, Band Change Switch	.30
P-44X97		Single Lug Terminal Strip (Mounting Hole Used)	.10
P-30X14		Grid Clip only	.10
P-13X214		Antenna and Ground Lead Assembly	.30
P-13X266		A, B and C Battery Cable	1.00
P-9AS48	T1	Antenna Trans. and Can Assembly	$2.00
P-9AA91	T2	Oscillator Coil and Can Assembly	2.00
P-9AS48	T3	Image Rejector	.30
P-9AA42	T4	1st I. F. Trans. and Can Assembly	1.40
P-9AA43	T5	2nd. I. F. Trans. and Can Assembly	1.40
P-80X33	T6	Input Transformer	1.30
P-9AS47	L1	Oscillator Plate Choke	.30
P-9AS12	L2	Filament Choke Coil	.30
P-15AX75		Dial Bracket Assembly, less Pilot Lamp, Pilot Light Socket and Spring Clip, Pointer, and On-Off Indicator Assembly	$1.45
P-10X48		Pointer	.10
P-28AX37		On-Off Indicator Disc Assembly	.10
P-7AX8		Pilot Lamp	.20
P-7A8		Pilot Light Socket and Spring Clip	.10
P-38AX94		Pilot Light Spring Contact Assembly (on drive shaft)	.30

*Used only on models with Sharmet rheostat.

©John F. Rider, Publisher

MODEL 6K Series
Schematic, Socket
Coil Data

WELLS-GARDNER & CO.

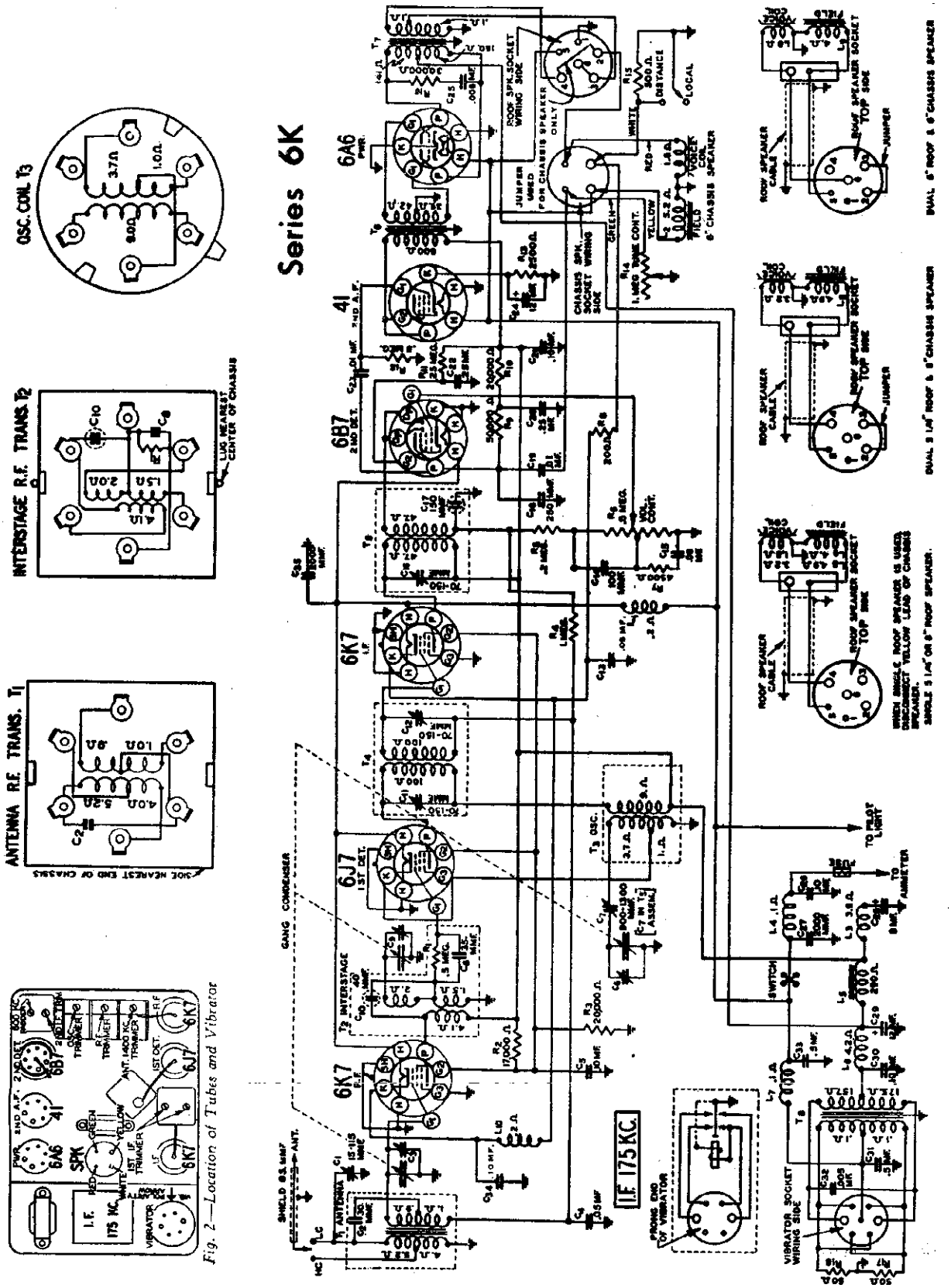

Fig. 2—Location of Tubes and Vibrator

©John F. Rider, Publisher

Series 6K

June 1936

6 Tube Synchronous Vibrator Automobile Radio

VOLTAGES AT SOCKETS

Antenna Plug Withdrawn — L-D Switch in Distant Position — Battery 6.3 Volts under Load

Type of Tube	Function	Across Heater	Plate to Ground	Screen to Ground	Cathode to Ground
6K7	R.F.	5.6	260	110	3
6J7	1st Det.	5.6	260	110	
6K7	I.F.	5.6	260	110	3
6B7	2nd Det.	5.6	55	50	
41	2nd A.F.	5.7	255	55	30
6A6	Pwr.	5.7	275		

I. F. Adjustment

Set the signal generator for a signal of 175 KC.

Connect the output of the signal generator through a .05 mf. condenser to the stator of the R.F. interstage section of the tuning condenser. (See Fig. 2 for location of this section.)

Connect the ground lead of the signal generator to the chassis ground.

Turn the Local-Distance switch to the Distance position and keep it in this position for all adjustments.

Set the volume control at the maximum position.

Attenuate the signal from the signal generator to prevent the levelling-off action of the AVC.

Then adjust the three I.F. trimmers until maximum output is obtained. The location of these trimmers is shown in Fig. 2.

1575 KC Adjustment

Set the signal generator for 1575 KC.

Turn the rotor of the tuning condenser to the full open position.

If a low capacity antenna is used, connect the shielded antenna lead from the chassis through a 150 mmf. condenser to the antenna post of the signal generator. (If high capacity, use 1500 mmf.) The antenna plug must be correctly inserted, dependent on the capacity of the antenna used.

For this and all subsequent adjustments keep the volume control at the maximum position and attenuate the signal from the signal generator to prevent AVC action.

Adjust the trimmer of the oscillator section of the three gang condenser until maximum output is obtained—see Fig. 2 for location of this trimmer.

1400 KC Adjustment

Set the signal generator for 1400 KC.

Turn the rotor of the tuning condenser carefully until maximum output is obtained.

Adjust the R.F. interstage and antenna 1400 KC trimmers for maximum output.

Do not change the setting of the oscillator trimmer.

600 KC Adjustment

Set the signal generator for 600 KC.

Connect the output of the signal generator through a .05 mf. condenser to the control grid of the 6K7 R.F. tube.

Turn the tuning condenser rotor until maximum output is obtained. Then turn the tuning condenser rotor back and forth, at the same time adjusting the 600 KC padder (see Fig. 2) until the peak of greatest intensity is obtained.

Re-connect the output of the signal generator to the shielded antenna lead through a 150 mmf. condenser (1500 mmf. if antenna is high capacity).

Adjust the 600 KC antenna trimmer to maximum. This trimmer is reached from the outside of the case

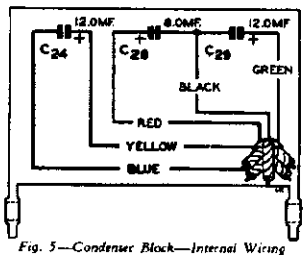

Fig. 5—Condenser Block—Internal Wiring

Adjusting Antenna 600 KC Trimmer

After the receiver is installed and the car antenna is connected, it will be necessary to adjust the antenna trimmer. Tune in a weak signal at approximately 600 KC with the volume control about three-fourths on. Turn the adjusting screw of the antenna 600 KC trimmer up or down until maximum output is obtained. See Fig. 3 for location of this trimmer.

As shown in this illustration, the antenna plug is inserted in one of two ways, depending on whether the car has a high or low capacity antenna. Full instructions are in the installation manual packed with each radio.

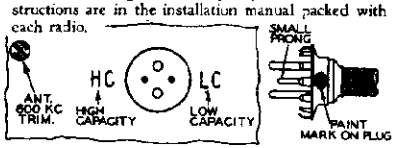

Fig. 3—Antenna Plug Insertion

Calibrating the Radio

To calibrate the radio, tune in a station of known frequency. At the back of the control head is the calibration screw. Remove the pilot lamp assembly. Insert a fine blade screwdriver and turn this screw until the pointer on the dial scale is at the frequency of the station being received. The knob must be held during this adjustment.

If the control head is inaccessible it may be calibrated by setting the pointer from the front. Remove the crystal by inserting a knife blade under the lower edge. Loosen the pointer screw, set the pointer and retighten.

Replacement Parts

There is a large letter on the chassis which identifies the set as to major part changes. When ordering parts please be sure to mention the series number and this large letter.

Part No.		Description	List Price
P-1A222	6J7	Tube Socket	$0.15
P-1A2H	6K7	Tube Socket	.15
P-1A286	6A6	Tube Socket	.15
P-3A116	41	Tube Socket	.10
P-1A130	6B7	Tube Socket	.15
P-3A229	6 Prong	Socket (External Speaker)	.15
P-3A226	Antenna	Socket	.10
P-3A228	Vibrator	Socket	.15
P-2A231	4 Prong	Socket (Internal Speaker)	.10

SPEAKER

P-12A242	6" Dynamic Speaker		$4.35

Part No.	Code	Description	List Price
P-1A588	L4	"A" Line Reactor	.30
P-52X46	L5	"B" Reactor	.80
P-1A585	L6	"S" Reactor	.30
P-1A587	L7	Vibrator Reactor	.50
P-1A474	L10	Filament Choke	.20

RESISTORS

CARBON

Part No.	Code	Resistance	Wattage	List Price
P-A9504	R1	500,000 Ohms	0.2	$0.15
P-C9417	R2	17,000 Ohms	1.0	.15
P-1A203	R3	20,000 Ohms	0.2	.15
P-A9505	R4	1 Megohm	0.2	.10
P-A9504	R5	200,000 Ohms	0.2	.10
P-A9452	R7	4,500 Ohms	0.2	.15
P-A9201	R8	200 Ohms	0.2	.15
P-B9503	R9	50,000 Ohms	0.5	.10
P-A9203	R16	20,000 Ohms	0.2	.10
P-A9254	R11	250,000 Ohms	0.2	.10
P-A9504	R12	500,000 Ohms	0.2	.10
P-B9252	R13	2,500 Ohms	0.5	.15
P-B9501	R15	500 Ohms	0.5	.15
P-C9303	R16	30,000 Ohms	1.0	.10
P-B9500	R17	50 Ohms	0.5	.15
P-B9500	R18	50 Ohms	0.5	.15

VARIABLE

P-36X217	R6	500,000 Ohms	Volume Control & Switch	1.80
P-40X212	R14	1 Megohm	Tone Control	.70

CONDENSERS

TUBULAR

Part No.	Code	Capacitance	Voltage	List Price
P-46X206	C4	.05 mf.	180	$0.15
P-4AX181	C5	.10 mf.	240	.15
P-46X208	C13	.05 mf.	180	.15
P-4AX188	C16	.06 mf.	180	.15
P-4BX161	C19	.01 mf.	600	.15
P-4AX109	C20	.25 mf.	360	.30
P-4AX108	C21	.10 mf.	360	.20
P-4AX143	C22	.25 mf.	360	.30
P-4AX120	C23	.01 mf.	360	.15
P-4AX101	C26	.006 mf.	600	.15
P-4AX190	C27	.06 mf.	180	.20
P-4AX106	C30	.10 mf.	360	.20
P-4AX136	C31	.5 mf.	180	.40
P-4AX183	C32	.0066 mf.	1,400	.20
P-4AX135	C33	.5 mf.	180	.40
P-4AX98	C34	.10 mf.	180	.20

ELECTROLYTIC

P-40X211	C24	12 mf.	25	Electrolytic Block	2.70
	C28	8 mf.	400		
	C29	12 mf.	450		

MOLDED

P-47X66	C2	30 mmf.	.15
P-47X83	C3	35 mmf.	.10
P-47X82	C14	100 mmf.	.10
P-47X65	C18	250 mmf.	.15
P-47X49	C37	2,000 mmf.	.20
P-47X41	C36	2,000 mmf.	.20

TRIMMER

P-17A48	C1	25-115 mmf. Antenna Trimmer	.20
	C3	Antenna Trimmer—Part of Gang Condenser	
	C6	Oscillator Trimmer—Part of Gang Condenser	
P-17A44	C7	980-1,300 mmf. 600 KC Oscillator Padding Cond.	.15
	C14	70-150 mmf. 2nd I. F. Primary Trimmer	
	C9	Interstage Trimmer Part of Gang Condenser	
P-17A33	C11	70-150 mmf.	.00
	C12	70-150 mmf. 1st I. F. Trimmer	

MISCELLANEOUS

C10	40 mmf. Integral Part of Interstage Transformer Assembly	
C17	150 mmf. Integral Part of 2nd I. F. Transformer Assembly	
P-14A51	Three Section Gang Condenser Assembly complete with Drive Gears	$4.50

Part No.		Description	List Price
P-15A36	Vibrator Unit		$4.10
Specify Name and Model of Receiver	Chassis Case Only		2.85
	Chassis Case Cover Only		2.85
	Spring Clamp Button		.10
	Tone Control Knob		.10
	Local-Distance Switch Knob		.10
P-30X14	8-32 x 3/16" Headless Cup Point Set Screw	Doz.	.15
P-30X41	Grid Clip only—Glass Tube		.10
P-30X41	Grid Clip only—Metal Tube		.10
P-32X30	Tube Shield Base		.10
P-32X29	Tube Shield		.10
P-2A54	Local-Distance Switch		.40

TRANSFORMERS AND COILS

Part No.	Code	Description	List Price
P-1A580	T1	Antenna Transformer & Can Assembly	$1.60
P-1A581	T2	Interstage Transformer & Can Assembly	1.35
P-1A582	T3	Oscillator Coil & Can Assembly	.85
P-1A583	T4	1st I. F. Coil & Can Assembly	1.40
P-1A584	T5	2nd I. F. Coil & Can Assembly	1.20
P-58X32	T6	Input Transformer	1.30
P-81X43	T7	Output Transformer	1.40
P-83X134	T8	Power Transformer	2.10
P-1A586	L1	Filament Reactor	.55
	L3	R.F. "B" Reactor } One Assembly	

CABLE AND FLEXIBLE SHAFT ASSEMBLIES

Part No.	Quan. Used	Description	List Price
P-18A40	2	20" Volume Control or Tuning Control Flexible Drive Shaft ea.	$1.10
P-18A42	2	25" Volume Control or Tuning Control Flexible Drive Shaft ea.	1.20
P-18A44	2	36" Volume Control or Tuning Control Flexible Drive Shaft ea.	1.45
P-13X252	1	Pilot Light Cable less Lamp	.65
P-13X253	1	48" Antenna Cable & Plug	.95
P-13X227	1	Battery Cable (long section with fuse receptacle)	.35
P-13X234	1	"A" Cable—Short Section Connected to Chassis (Part of Chassis Assembly)	.35

MOUNTING BOLT ASSEMBLY

P-20X59	1	Double End Hex Bolts for Mounting Chassis to Dash ea.	.10
	3	5/16"—18 Spring Lockset for above Mounting Assembly doz.	.10
P-19X18	6	Flat Washers for above Mounting Assembly doz.	.15
	6	5/16"—18 Hex Nuts for above Mounting Assembly doz.	.15
	1	5/16" Shakeproof Lockwasher to Ground Chassis Case to Metal Dash Surface on Engine Side doz.	.10

MISCELLANEOUS MOUNTING ITEMS

P-7A32	1	Pilot Light Bulb	.20
P-16X14	1	20 Ampere Fuse	.10
P-16X3	1	Fuse Shield	.10
P-21A6	1	Distributor Suppressor	.75
P-48X27	1	Generator Condenser	.75
P-21A5	1	Choke Condenser Unit (Not Shipped with Set)	1.00
P-21A7		Spark Plug Suppressors (Not Shipped with Set) ea.	.35

CONTROL HEAD AND PLATE ASSEMBLY

Part No.	Quan. Used	Description	List Price
*P-20A27	1	No. 4 Control Head only with ¾" Hex Nut	2.00
*P-20A28	1	Volume Control Fitting complete with Retaining Spring, ¾" Hex Nut and Lock Washer	.25
*	1	Dial Scale (Specify Name and Model of Radio)	.10
*P-15X46	1	Pointer	.10
*	1	Pointer Screw 3-48 x 5/16" doz.	.10
†P-17X13	1	Dial Crystal	.25
†	1	Control Knobs—Specify Car, Year and Model ea.	.35

NOTE: Prices of Instrument Panel Plate Kits are shown in Chart on Page 5.

* Shipped with each Set

†Shipped with Panel Kit

ROOF MOUNTING SPEAKER KITS

1936 BUICK, CHEVROLET, PONTIAC, OLDSMOBILE

Part No.		Description	List Price
P-21A27	SPEAKER KIT ASSEMBLY COMPLETE Includes		$5.35
P-12A234	8½" Dynamic Speaker		3.05
P-23A56	Mounting Kit—Includes Trim Ring, Speaker Housing, Self Tapping Screws & Clamp Springs		2.00
P-13X248	Speaker Cable Assembly Complete		1.05
P-21A28	SPEAKER KIT ASSEMBLY COMPLETE Includes		5.65
P-12A233	8" Dynamic Speaker		4.65
P-23A57	Mounting Kit—Includes Trim Ring and Self Tapping Screws		2.00
P-13X248	Speaker Cable Assembly Complete		1.05

1936 FORD—STANDARD AND DELUXE

P-21A29	SPEAKER KIT ASSEMBLY COMPLETE Includes		4.15
P-12A234	8½" Dynamic Speaker		3.05
P-23A58	Mounting Kit—Includes Hex Nuts, Lockwashers and Bolts		.90
P-13X248	Speaker Cable Assembly Complete		1.05

WELLS-GARDNER & CO., INC.

MODEL 6K Series Voltage, Alignment Data, Parts List

WELLS-GARDNER PAGE 7-2

MODEL 6L Series
Schematic, Socket
Coil Data

WELLS-GARDNER & CO.

Series 6L

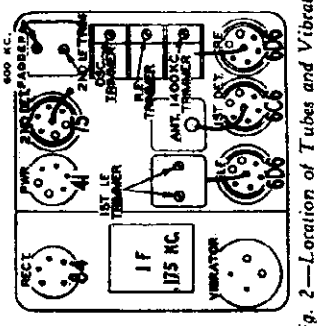

Fig. 2—Location of Tubes and Vibrator

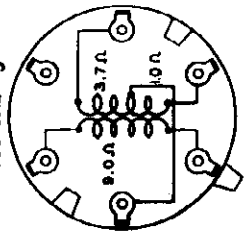

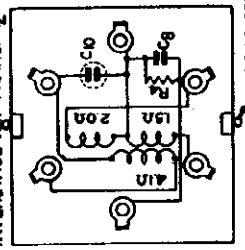

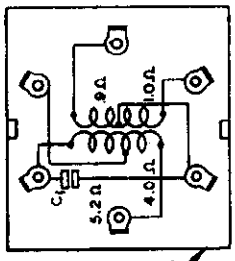

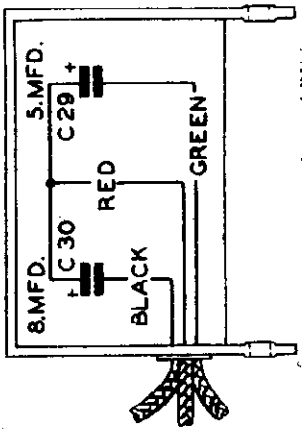

Fig. 3—Condenser Block—Internal Wiring

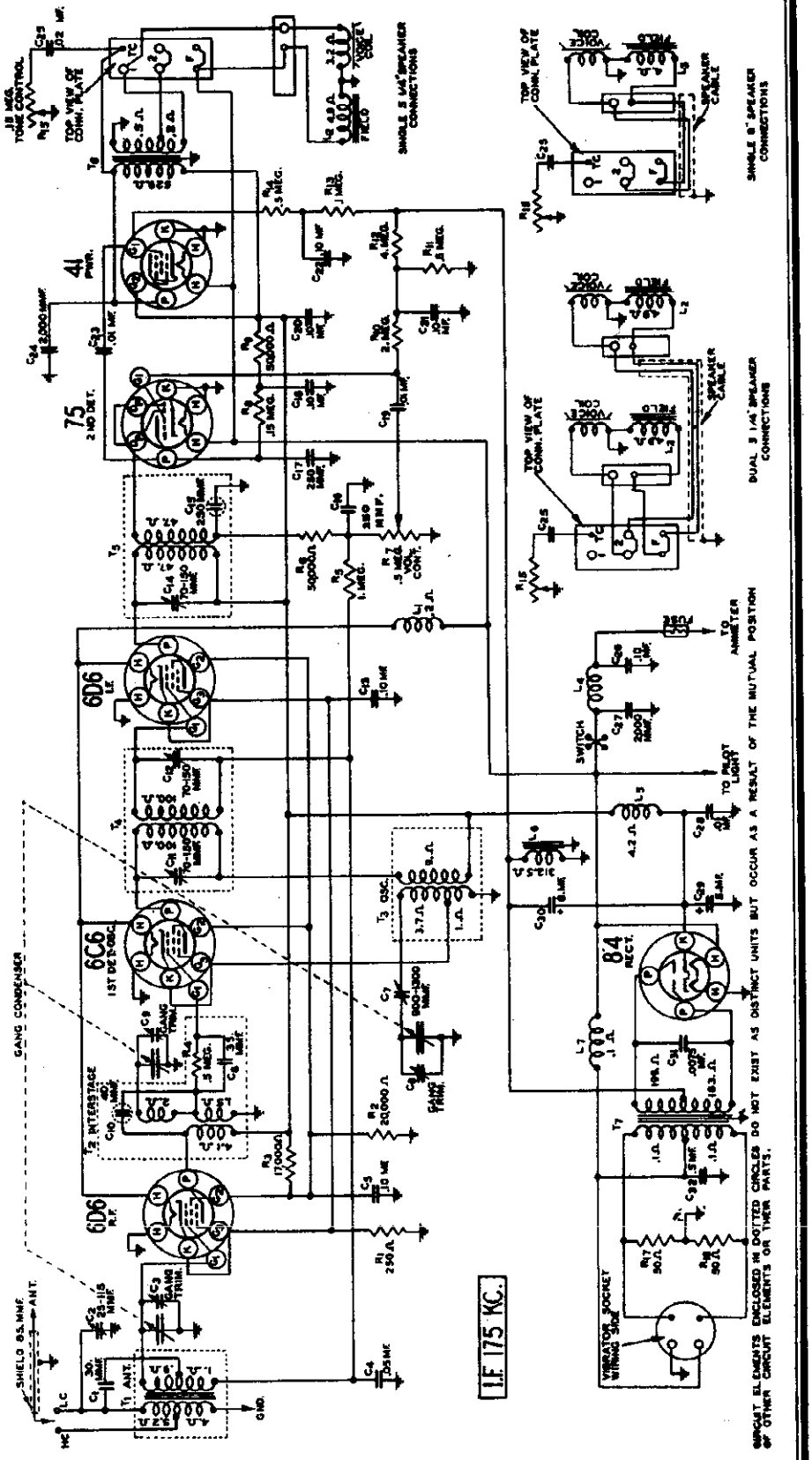

WELLS-GARDNER & CO., INC.

MODEL 6L Series
Alignment, Voltage
Parts List

Series 6L

6 Tube

Automobile Radio

June 1936

I. F. Adjustment

Set the signal generator for a signal of 175 KC.

Connect the output of the signal generator through a .05 mf. condenser to the stator of the R. F. interstage section of the tuning condenser. (See Fig. 2 for location of this section.)

Connect the ground lead of the signal generator to the chassis ground.

Set the volume control at the maximum position.

Attenuate the signal from the signal generator to prevent the levelling-off action of the AVC.

Then adjust the three I.F. trimmers until maximum output is obtained. The location of these trimmers is shown in Fig. 2.

1575 KC Adjustment

Set the signal generator for 1575 KC.

Turn the rotor of the tuning condenser to the full open position.

If a low capacity antenna is used, connect the shielded antenna lead from the chassis through a 150 mmf. condenser to the antenna post of the signal generator. (If high capacity, use 1500 mmf.)

For this and all subsequent adjustments keep the volume control at the maximum position and attenuate the signal from the signal generator to prevent AVC action.

Adjust the trimmer of the oscillator section of the three gang condenser until maximum output is obtained—see Fig. 2 for location of this trimmer.

1400 KC Adjustment

Set the signal generator for 1400 KC.

Turn the rotor of the tuning condenser carefully until maximum output is obtained.

Adjust the R.F. interstage and antenna 1400 KC trimmers for maximum output.

Do not change the setting of the oscillator trimmer.

600 KC Adjustment

Set the signal generator for 600 KC.

Connect the output of the signal generator through a .05 mf. condenser to the control grid of the 6D6 R.F. tube.

Turn the tuning condenser rotor until maximum output is obtained. Then turn the tuning condenser rotor back and forth, at the same time adjusting the 600 KC padder (see Fig. 2) until the peak of greatest intensity is obtained.

Re-connect the output of the signal generator to the shielded antenna lead.

Adjust the 600 KC antenna trimmer to maximum. This trimmer is reached from the outside of the case —see Fig. 3.

Adjusting Antenna 600 KC Trimmer

After the receiver is installed and the car antenna is connected, it will be necessary to adjust the antenna trimmer. Tune in a weak signal at approximately 600 KC with the volume control about three-fourths on. Turn the adjusting screw of the antenna 600 KC trimmer up or down until maximum output is obtained. See Fig. 3 for location of this trimmer.

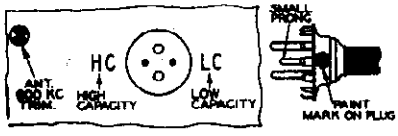

Fig. 3—Antenna Plug Insertion

Antenna Disconnected	Battery 6 Volts Under Load				
Type of Tube	Function	Across Heater	Plate to Ground	Screen to Ground	Cathode to Ground
6D6	R.F.	6	233	103	4.0
6C6	1st Det. & Osc.	6	233	103	
6D6	I.F.	6	233	103	4.0
75	2nd Det.	6	130		
41	Power	6	215	233	16.0(1)
84	Rectifier	6	560(2)		

(1) Grid bias read across filter choke L6
(2) Plate to Plate A.C. voltage

Calibrating the Receiver

To calibrate the receiver, tune in a station of known frequency. At the back of the control head is the calibration screw. Remove the pilot lamp assembly. Insert a fine blade screwdriver and turn this screw until the pointer on the dial scale is at the frequency of the station being received. The knob must be held during this adjustment.

If the control head is inaccessible it may be calibrated by setting the pointer from the front. Remove the crystal by inserting a knife blade under the lower edge. Loosen the pointer screw, set the pointer and retighten.

Replacement Parts

MISCELLANEOUS

SOCKETS

Part No.	Description	List Price
P-3A113	Type [illegible] Tube Socket	$0.10
P-3A114	Type [illegible] Tube Socket	.10
P-3A19	Type [illegible] Tube Socket	.10
P-3A134	Type [illegible] Tube Socket	.10
P-3A132	Type [illegible] Tube Socket	.10
P-3A135	Vibrator Socket	.10
P-3A257	Speaker Socket (In chassis)	.25
P-3A256	Antenna Cable Socket	.10

SPEAKER

P-12A234	5½" Dynamic Speaker	$3.05
P-13X260	Red Chassis Speaker Lead	.10
P-13X260	Green Chassis Speaker Lead	.10
P-13X263	White Tone Control Lead	.10

GENERAL

P-19A25	Vibrator Unit	$3.40
P-34X214	Chassis Case Only	3.00
P-38X49	Spring Clamp Buttons	.10
P-54X215	Chassis Case Cover Only	1.30
	8-32 x 3/16" Set Screws to Secure Flexible Shafts in Chassis Anchor Bushings	Doz. .15
P-18A58	Tone Control Knob	.10
P-38X34	Grid Clip Only	.10
P-38X30	Tube Shield Base	.10
P-32X168	Tube Shield	.15
P-4A58	Type 6A Terminal Strip (Mounting lugs insulated—Center mounting hole not used)	.10
P-4A61	Single Lug Terminal Strip (Mounting foot to Right of Lug)	.10
P-4A58	Single Lug Terminal Strip (Mounting foot to Left of Lug)	.10

TRANSFORMERS AND COILS

Part No.	Code	Description	List Price
P-9A561	T1	Antenna Transformer and Can Assembly	$1.65
P-9A562	T2	Interstage Transformer and Can Assembly	1.55
P-9A563	T3	Oscillator Coil and Can Assembly	.80
P-9A564	T4	1st I.F. Transformer and Can Assembly	1.45
P-9A565	T5	2nd I.F. Transformer and Can Assembly	1.80
P-51X42	T6	Output Transformer	1.10
P-50X123	T7	Power Transformer	4.95
P-9A566	L1	Filament Reactor (One Assembly)	.85
P-9A566	L5	R.F. "B" Plate Reactor (One Assembly)	.85
P-9A566	L4	Motor Noise Reactor	.35
P-52X42	L6	Filter Choke	.80
P-9A567	L7	Vibrator Reactor	.90

TRIMMER

P-17A48	C2	25-115 mmf. Antenna 600 KC Trimmer	$0.20
	C4	Antenna Trimmer—Part of Gang Condenser	
	C6	Oscillator Trimmer—Part of Gang Condenser	
	C9	Interstage Trimmer—Part of Gang Condenser	
P-17A33	C11	70-150 mmf. 1st I.F. Trimmers	.40
	C12	70-150 mmf. 1st I.F. Trimmers	
P-17A46	C14	70-150 mmf. 2nd I.F. Primary Trimmer	.55
	C7	900-1700 mmf. 600 KC Oscil. Pad. Cond.	

MISCELLANEOUS

C10	40 mmf.	Integral Part of Interstage Transformer Assembly
C15	250 mmf.	Integral Part of 2nd I.F. Transformer
P-14A51	Three Section Gang Condenser Assembly Complete with Drive Gears	4.50

INSTALLATION ITEMS

CABLE AND FLEXIBLE SHAFT ASSEMBLIES

Part No.	Quan. Used	Description	List Price
P-18A40	1	20" Volume Control Flexible Drive Shaft	$1.10
P-18A40	1	29" Tuning Control Flexible Drive Shaft	1.20
P-18A42	1	26" Volume Control Flexible Drive Shaft	1.20
P-18A42	1	25" Tuning Control Flexible Drive Shaft	1.20
P-18A44	1	30" Volume Control Flexible Drive Shaft	1.45
P-18A44	1	30" Tuning Control Flexible Drive Shaft	1.45
P-13X253		Pilot Light Cable Assembly less Lamp	.45
P-13X251		"B" Antenna Cable and Plug	.90
P-13X257		Battery Cable (Long Section with Fuse Receptacle)	.35
P-13X254		Control Cable—Short Section with Fuse Receptacle	.35
		Harness (Part of Chassis Assembly)	.35

MOUNTING BOLT ASSEMBLY

P-38X59	3	Double End Hexagon Bolts for "Mounting Chassis to Dash	$0.10
	3	5/16"-18 Spring Lockout for above Mounting Bolts	.10
P-19X18	6	Flat Washers for above Mounting Assembly	.15
	6	5/16"-18 Hexagon Nuts for above Mounting Assembly	Doz. .15
	1	5/16" Shakeproof Lockwasher to Ground Chassis Case to Metal Dash Surface on Engine Side	Doz. .10

MISCELLANEOUS MOUNTING ITEMS

P-7A22	1	Pilot Light Bulb	$0.20
P-14X14	1	20 Ampere Fuse	.10
P-36X3	1	Fuse Shield	.10
P-21A6	1	Distributor Suppressor	.35
P-48X27	1	Generator Condenser	.45
P-21A5	1	Choke-Condenser Unit (Not Shipped With Set)	1.50
P-21A7		Spark Plug Suppressor (Not Shipped With Set)	.35

RESISTORS

CARBON

Part No.	Code	Resistance Wattage	List Price
P-A94251	R1	250 Ohms 0.2	$0.15
P-B94303	R2	20,000 Ohms 0.5	.15
P-C94473	R3	17,000 Ohms 1.0	.15
P-A94904	R4	500,000 Ohms 0.2	.15
P-A95105	R5	1 Megohm 0.5	.10
P-A95583	R6	10,000 Ohms 0.2	.10
P-A95154	R8	150,000 Ohms 0.2	.10
P-A95205	R9	50,000 Ohms 0.2	.10
P-A95205	R10	2 Megohms 0.2	.10
P-A94804	R11	300,000 Ohms 0.2	.15
P-A94905	R12	1 Megohm 0.2	.15
P-A94104	R13	100,000 Ohms 0.2	.15
P-A95504	R14	600,000 Ohms 0.2	.10
P-B94500	R16	30 Ohms 0.5	.15
P-B94500	R17	30 Ohms 0.5	.15

VARIABLE

P-36X216	R7	.5 Megohm Vol. Control and Switch	$0.85
P-40X207	R15	.15 Megohm Tone Control	.70

CONDENSERS

TUBULAR

Part No.	Code	Capacitance Voltage	List Price
P-46X80	C4	.05 mf. 180	$0.35
P-46X98	C5	.10 mf. 180	.20
P-46X108	C13	.10 mf. 180	.20
P-46X105	C18	.10 mf. 360	.20
P-46X120	C19	.01 mf. 360	.15
P-46X105	C26	.10 mf. 360	.20
P-49X4	C21	.10 mf. 180	.35
	C22	.10 mf. 180	.35
P-49X120	C23	.01 mf. 360	.15
P-46X190	C25	.02 mf. 600	.15
P-46X98	C35	.10 mf. 180	.20
P-46X120	C36	.01 mf. 360	.15
P-46X177	C31	.0075 mf. 1600	.30
P-46X136	C32	.50 mf. 180	.40

ELECTROLYTIC

P-45X210	C29 5.0 mf. / C30 8.0 mf.	Electrolytic Block	$1.70

MOULDED

P-47X66	C1	30 mmf.	$0.15
P-47X33	C8	35 mmf.	.30
P-47X52	C16	250 mmf.	.15
P-47X52	C17	250 mmf.	.15
P-47X41	C24	2000 mmf.	.30
P-47X41	C27	2000 mmf.	.30

CONTROL HEAD AND PLATE ASSEMBLY

Part No.	Description	List Price
*20A27	No. 4 Control Head Only with 36" Hex. Nut	$3.00
*20A28	Volume Control Fitting complete with Retaining Spring, 36" Hex. Nut and Lock Washer	.25
	Dial Scale (Specify Name and Model Number)	.10
*18X48	Pointer	.10
	Pointer Screw 3-48 x 3/16"	Doz. .30
†17X13	Dial Crystal	.25
†	Control Knobs—Specify Car, Year and Model	.25

Notes: Prices of Instrument Panel Plate Kits are shown in Chart on Page 3.
* Shipped with each set.
† Shipped with Panel Kit.

ROOF SPEAKER MOUNTING KITS

1936 BUICK, CHEVROLET, PONTIAC, OLDSMOBILE

Part No.	Description	List Price
P-21A27	Speaker Kit Assembly Complete Includes	$3.35
P-12A234	5½" Dynamic Speaker	3.05
P-20A56	Mounting Accessories—Includes Trim Ring, Speaker Housing, Self Tapping Screws and Clamp Springs	.30
P-13X248	Speaker Cable Assembly Complete	1.85
P-21A42	Single Roof Speaker Kit less Speaker	2.30
P-9X19	Cardboard Disc—to replace Speaker removed from Chassis Cover	.10
	For Mounting Accessories and Roof Speaker Cable See Kit No. 21A27 above.	
P-21A28	Speaker Kit Assembly Complete Includes	5.05
P-12A234	5½" Dynamic Speaker	3.05
P-21A57	Mounting Accessories—Includes Trim Ring and Self Tapping Screws	.15
P-13X248	Speaker Cable Assembly Complete	1.85

1936 FORD—STANDARD AND DE LUXE

P-21A27	Speaker Kit Assembly Complete Includes	$4.35
P-12A234	5½" Dynamic Speaker	3.05
P-20A58	Mounting Accessories — Includes Hex. Nuts, Lock Washers and Bolts	.40
P-13X248	Speaker Cable Assembly Complete	1.85
P-21A43	Single Roof Speaker Kit less Speaker	1.80
P-9X19	Cardboard Disc—to replace Speaker removed from Chassis Cover	.10
	For Mounting Accessories and Roof Speaker Cable See Kit No. 21A27 above.	

©John F. Rider, Publisher

MODEL 6N Series
Schematic, Socket
Trimmers

WELLS-GARDNER & CO.

Power Consumption - -	7.0 Amperes at 6.0 Volts	Tuning Frequency Range - - -	530 to 1650 KC
Power Output - - - - -	3 Watts Undistorted	Intermediate Frequency - - - - - - -	175 KC
Sensitivity - - - - -	1.0 Microvolt Absolute		
Selectivity - -	45 KC Broad at 1000 Times Signal	Speaker - - - - - - - - - -	6 inch Dynamic

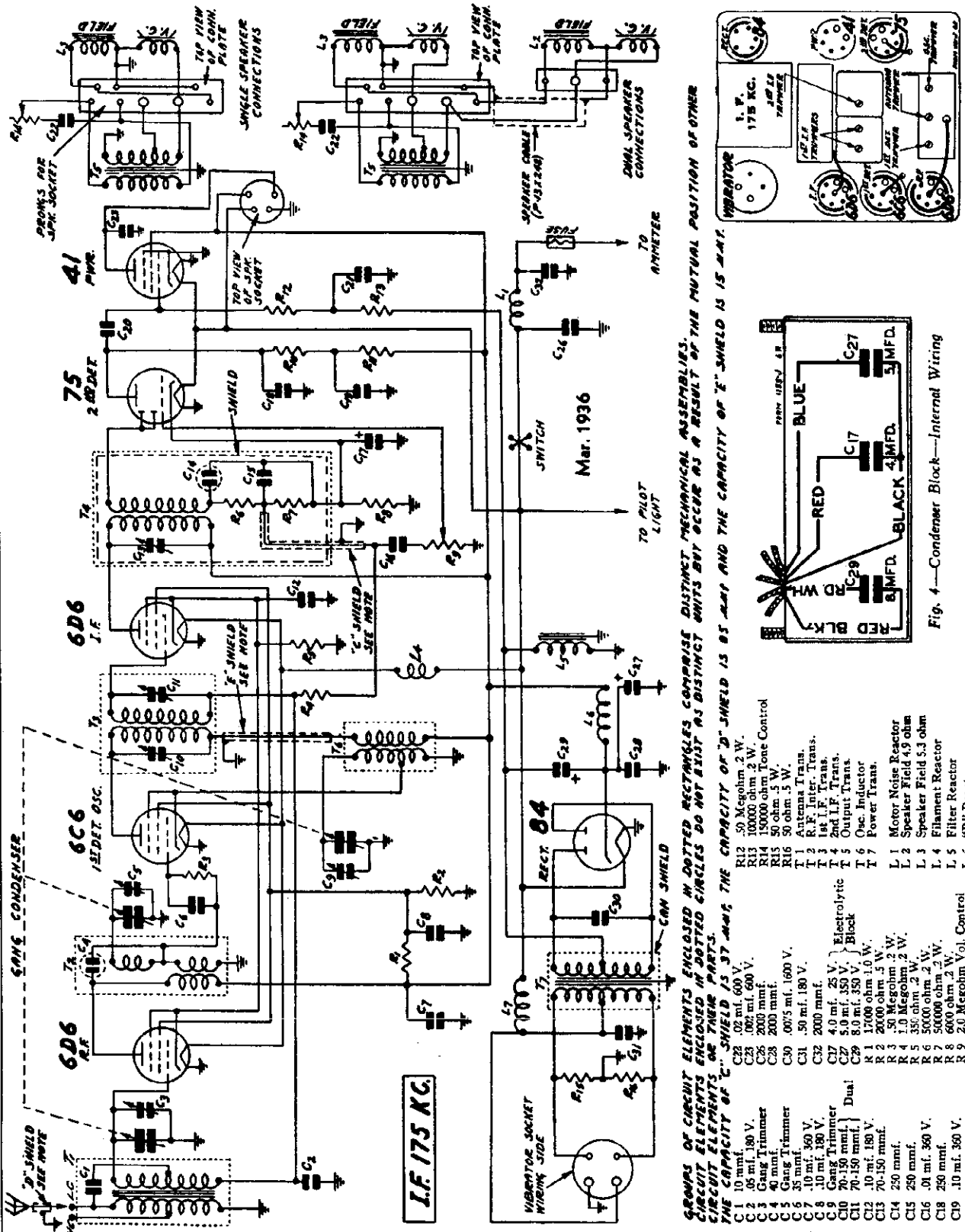

Fig. 2—Location of Tubes and Trimmers

Fig. 4—Condenser Block—Internal Wiring

GROUPS OF CIRCUIT ELEMENTS ENCLOSED IN DOTTED RECTANGLES COMPRISE DISTINCT MECHANICAL ASSEMBLIES.
CIRCUIT ELEMENTS ENCLOSED IN DOTTED CIRCLES DO NOT EXIST AS DISTINCT UNITS BUT OCCUR AS A RESULT OF THE MUTUAL POSITION OF OTHER CIRCUIT ELEMENTS OR THEIR PARTS.
THE CAPACITY OF "2" SHIELD IS .37 MMF, THE CAPACITY OF "3" SHIELD IS .85 MMF AND THE CAPACITY OF "2" SHIELD IS .15 MMF.

C1	10 mmf.	C22	.02 mf. 600 V.	R12	.50 Megohm .2 W.
C2	.05 mf. 180 V.	C23	.002 mf. 600 V.	R13	100000 ohm .2 W.
C3	Gang Trimmer	C26	2000 mmf.	R14	150000 ohm Tone Control
C4	40 mmf.	C28	2000 mmf.	R15	50 ohm .5 W.
C5	Gang Trimmer	C30	.0075 mf. 1600 V.	R16	50 ohm .5 W.
C6	35 mmf.	C31	.50 mf. 180 V.	T 1	Antenna Trans.
C7	.10 mf. 360 V.	C32	2000 mmf.	T 2	R.F. Inter. Trans.
C8	.10 mf. 180 V.	C17	4.0 mf. 25 V. } Electrolytic	T 3	1st I.F. Trans.
C9	Gang Trimmer	C27	5.0 mf. 150 V. } Block	T 4	2nd I.F. Trans.
C10	70-150 mmf. } Dual	C29	8.0 mf. 350 V. }	T 5	Output Trans.
C11	70-150 mmf. }	R 1	17000 ohm 1.0 W.	T 6	Osc. Inductor
C12	.10 mf. 180 V.	R 2	20000 ohm .5 W.	T 7	Power Trans.
C13	70-150 mmf.	R 3	.50 Megohm .2 W.	L 1	Motor Noise Reactor
C14	250 mmf.	R 4	1.0 Megohm .2 W.	L 2	Speaker Field 4.9 ohm
C15	250 mmf.	R 5	350 ohm .2 W.	L 3	Speaker Field 5.3 ohm
C16	.01 mf. 360 V.	R 6	50000 ohm .2 W.	L 4	Filament Reactor
C18	250 mmf.	R 7	500000 ohm .2 W.	L 5	Filter Reactor
C19	.10 mf. 360 V.	R 8	6000 ohm .2 W.	L 6	"B" Reactor
C20	.01 mf. 360 V.	R 9	2.0 Megohm Vol. Control	L 7	Vibrator Reactor
C21	.25 mf. 180 V.	R10	150000 ohm .2 W.		
		R11	50000 ohm .2 W.		

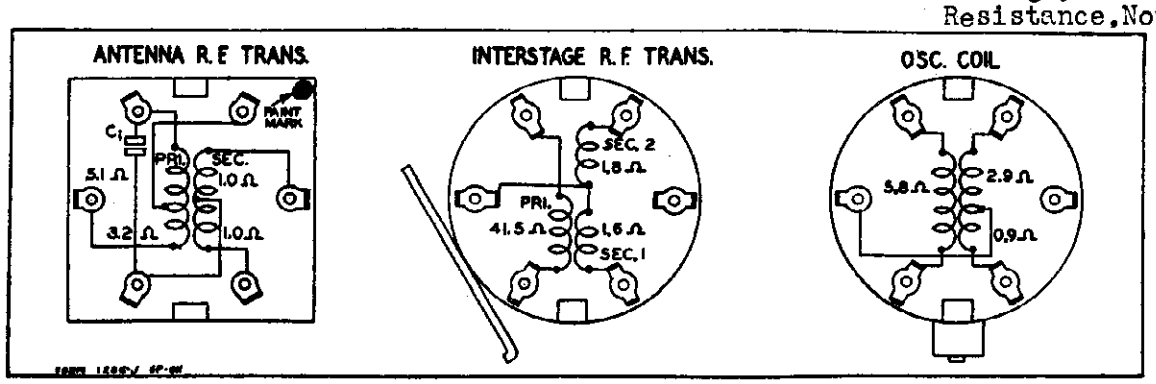

Fig. 3—R. F. and Oscillator Coil Base Terminal Arrangement and D. C. Resistance of Windings

D. C. Resistance of Windings

Following are the D. C. resistances of the various windings in the chassis. The values given below will vary slightly in different sets.

Code	Winding	D. C. Resistance in Ohms
T1	Antenna Transformer	
	Primary Winding	
	Long Portion	5.1
	Short Portion	3.2
	Secondary Winding—Either Portion	1.0
T2	Interstage Transformer	
	Primary Winding	41.5
	Secondary Winding	
	No. 1	1.6
	No. 2	1.8
T3	1st I. F. Transformer	
	Primary Winding	88.0
	Secondary Winding	87.0
T4	2nd I. F. Transformer	
	Primary Winding	43.0
	Secondary Winding	48.2
T5	Dynamic Speaker Output Transformer	
	Primary	416.6
	Secondary	Small
L3	Speaker Field	5.3
	Speaker Voice Coil	Small
T6	Oscillator Coils	
	Grid Coil	
	Long Portion	2.9
	Short Portion	0.9
	Plate Coil	5.8
T7	Power Transformer	
	Primary Winding	
	Center Tap to Inside	Small
	Center Tap to Outside	Small
	Secondary Winding	
	Center Tap to Inside	200.0
	Center Tap to Outside	200.0
L1	Motor Noise Reactor	Small
L4	Filament Reactor	.22
L5	Filter Choke	300.0
L6	R. F. "B" Plate Reactor	4.0
L7	Vibrator Filter Reactor	Small

VOLTAGES AT SOCKETS

Antenna Disconnected Battery 6 Volts Under Load

Type of Tube	Function	Across Heater	Plate to Ground	Screen to Ground	Cathode to Ground	Cathode Current M. A.
6D6	R. F. Amp.	5.6	245	105	5.2	7.5
6C6	1st Det. Osc.	5.6	245	105	0	2.9
6D6	I. F. Amp.	5.6	245	105	5.2	7.5
75	2nd Det.	5.8	120(1)		1.4	0.14
41	Power	5.8	235	245	15.0(2)	30.0
84	Rectifier	5.8				52.0

(1) With 250,000 Ohm Meter
(2) Read Across Filter Choke

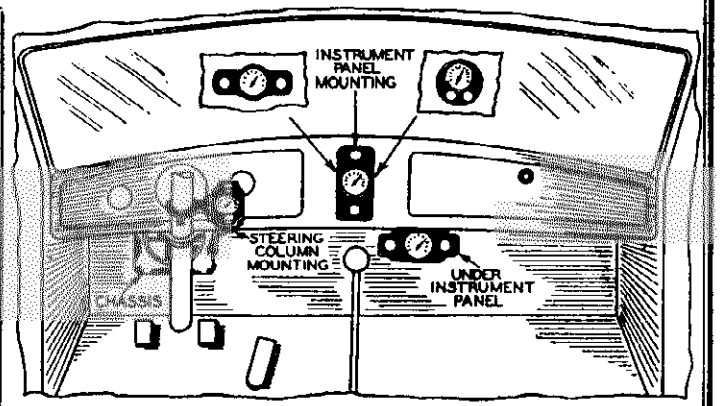

Fig. 1—Various Control Head Mountings

Antenna

IMPORTANT—If the car antenna is of high capacity (600 mmf. or higher) insert the antenna plug with the mark on the HC side—See Fig. 10. If it is a low capacity antenna, insert the plug with the mark on the LC side

The General Motors cars have steel roofs, and a running board or other under car antenna must be used. These are low capacity antennas. The Chrysler motor cars (except Plymouth) have a steel roof separated from the body proper, which is used as an antenna. These are high capacity antennas. Other cars without steel roofs such as Ford and Plymouth have a built-in roof antenna which is of low capacity.

If a running board or under-car antenna is used, it must be one which is covered with a suitable insulation, to prevent short circuiting in wet weather.

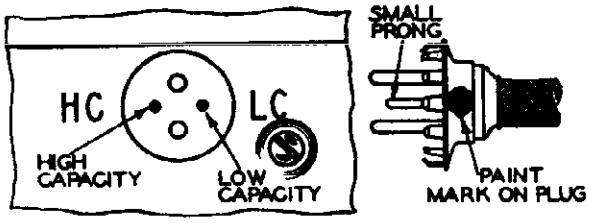

Fig. 10—Antenna Plug Insertion

©John F. Rider, Publisher

Alignment and Calibration

Misalignment or mistracking of condensers generally manifests itself as broad tuning and lack of volume at portions or all of the standard wave band. The receivers are all properly aligned at the factory with precision instruments and realignment should not be attempted unless all other possible causes of the faulty operation have first been investigated and unless the service technician has the proper equipment.

A signal generator that will provide accurately calibrated signals over the standard wave band and at the intermediate frequency, and an output meter are required for indicating the effect of adjustments.

Use a non-metallic screwdriver for the adjustments. The complete procedure is as follows:

I. F. Adjustment

Set the signal generator for a signal of 175 KC.

Connect the antenna lead of the signal generator thru a .05 mf. condenser to the stator of the 1st detector section of the tuning condenser. (See Fig. 2 for location of this section.) This can be done by pushing a wire or conductor between the stator plates or by extending an insulated wire thru the hole in the shield over the stator and pushing the wire thru the hole in the lug which extends up from the insulated stator assembly.

Connect the ground lead of the signal generator to the chassis ground.

Short out the oscillator section of the tuning condenser.

Set the volume control at the maximum position.

Attenuate the signal from the signal generator to prevent the levelling-off action of the AVC.

Then adjust the three I.F. trimmers until maximum output is obtained. The location of these trimmers is shown in Fig. 2.

1650 KC Adjustment

Set the signal generator for 1650 KC.

Turn the rotor of the tuning condenser to the full open position.

If a low capacity antenna is used connect the shielded antenna lead from the chassis through a 150 mmf. condenser to the antenna post of the signal generator. (If high capacity, use 1500 mmf.)

For this and all subsequent adjustments keep the volume control at the maximum position and attenuate the signal from the signal generator to prevent AVC action.

Adjust the trimmer of the oscillator section of the three gang condenser until maximum output is obtained—see Fig. 2 for location of this trimmer.

1400 KC Adjustment

Set the signal generator for 1400 KC.

Turn the rotor of the tuning condenser carefully until maximum output is obtained.

Adjust the 1st detector and antenna trimmers for maximum output.

Do not change the setting of the oscillator trimmer.

Adjusting Antenna Trimmer

After the receiver is installed and the car antenna is connected it will be necessary to adjust the antenna trimmer. Tune in a weak signal between 1200 and 1400 KC with the volume control about three-fourths on. Remove the cover of the chassis case. The antenna trimmer is on the center tuning condenser section—see Fig. 2. Turn the adjusting screw of this condenser up or down until maximum output is obtained. CAUTION—Do not turn any of the other trimmer adjusting screws for this adjustment.

Calibrating the Receiver

To calibrate the receiver, tune in a station of known frequency. At the back of the control head is the calibration screw. Remove the pilot lamp assembly. Insert a fine blade screwdriver and turn this screw until the pointer on the dial scale is at the frequency of the station being received. The knob must be held during this adjustment.

If the control head is inaccessible it may be calibrated by setting the pointer from the front. Remove the crystal by inserting a knife blade under the lower edge. Loosen the pointer screw, set the pointer and retighten.

Suppression of Ignition and Generator Noise

The two units mentioned below must be used in every case:

Distributor Suppressor—Remove the high tension lead to the distributor. Insert a distributor suppressor and connect the wire to the other end of the suppressor (see Fig. 13). If this is not practical, cut the high tension lead *close to the distributor* and use a wood screw end type distributor suppressor in this line.

Generator Condenser—The generator condenser is installed at the cut-out as shown in Fig. 13. The lead from the condenser goes to the terminal on the cut-out.

In some of the new cars the cut-out relay is on the front of the dash or in some other location. It will be most convenient to mount this generator condenser at the relay.

Withdraw Antenna Cable Plug

Turn on the receiver and start the engine.

If motor noise is heard, proceed as follows:

Shielding High Tension Lead—In some cars when the coil is mounted on the dash, the high tension lead from the coil to within about four inches of the distributor must be covered with braided shielding and the shield grounded to the motor block or frame.

Bypass Condenser—Try a .25 or .5 mfd. condenser from the ammeter to ground. Try a condenser from the car fuse to ground, switch to ground, windshield wiper connections and various other 6 volt connections to ground noting what effect these condensers have on the noise pick-up.

Try a .25 or .5 mfd. condenser from the "Hot" side of the coil primary to ground. In some cases this condenser may not help. It can be tried out, however, experimentally.

Spark Plug Suppressors—If motor noise persists, spark plug suppressors must be installed. One suppressor is put on each plug as shown in Fig. 13. These are not regularly supplied with the receiver and must be purchased extra. Seventy percent of all cars will not require spark plug suppressors.

Care should be taken that a good mechanical and electrical connection is made between the spark plugs, suppressors and plug wires.

Then Reinsert Antenna Cable Plug

If motor noise is heard when the antenna cable is reconnected, proceed as follows until the noise is satisfactorily reduced:

Dome Light Lead—To determine the amount of noise due to the dome light lead, disconnect this lead at the ammeter, block, or where it is connected, coil it up, and tuck it as far as possible up in the column at which it comes down. Then, with the engine running, ground the end of this wire. If this is found to reduce the noise noticeably, interference is being radiated by the dome light lead. Reconnect the dome light lead and try a .25 or .5 mfd. condenser from the connecting point of the lead to ground. If this does not cure the noise, disconnect the lead and encase it in braided copper shield from the point where it leaves the column post to the point of connection. Keep the lead as far away as possible from car ignition wires and ground the shield.

If the noise due to the dome light lead still persists, disconnect this lead and remove it from the front corner post, at which point it is generally run down. Run the lead down one of the side posts in back of the door and direct to the storage battery. If done in this manner this lead should be fused.

Bonding Cables—Try grounding to the dash all cables and tubing which pass through it, such as oil lines, gas lines, etc. By means of a file, contact can be established between any of the lines and the dash, in order to determine whether such a ground will reduce the noise. To bond the cables to the dash, clean the point of contact, wrap a length of braided shielding around the cable and solder the connection. Then solder the end of the shielding to the dash or ground it under a screw head if one is convenient.

Sufficient play should be left in the bonding shielding so that movement of the cables or tubing will not loosen this shielding from the dash.

High and Low Tension Leads—In some cases, the high and low tension leads between the coil and distributor are run close together. In some cars they are in the same conduit. If this is the case, remove the low tension lead from this conduit. In any event, keep the high and low tension leads as far apart from each other as possible. Shield and ground the shield of the low tension lead, if separating the two leads is not sufficient.

Steering Column, Etc.—It is possible for the steering column, foot pedals and brake lever to carry interference to the back of the dash at which point it may affect the radio receiver. See if each of these items are well grounded to the frame of the car. By means of a file or a braided shielding jumper, contact can be established between any of these items and the frame in order to determine whether such a ground will reduce the noise. A piece of one inch braided shielding should be used if such a ground is necessary and this shielding may be grounded under a screw head, nut or may be soldered in position.

Grounding Engine and Other Parts—The engine must, in every case, be well grounded to the frame of the car. If it is not, use a very heavy braided lead for this purpose, similar to a storage battery ground lead. In like manner it may be necessary to check the grounding of the metal dash, instrument panel, radiator and hood to the frame of the automobile.

Weak Pick-up—Noise, on occasion, may be due to weak pick-up caused by the automobile being in a shielded location or by a faulty antenna system. The action of the automatic volume control, due to the low pick-up, causes the set to operate at its maximum sensitivity, thereby increasing noisy reception, due both to external pick-up and internal conditions.

Loose Parts in Car—Noisy operation is also caused in some instances by loose parts in the car body or frame. These loose parts rubbing together affect the grounding and cause noises, due to the rubbing or wiping action. Tightening up the frame and body at all points and in some cases, the use of a copper jumper will eliminate noise of this nature.

Making Final Adjustments and Bolting Chassis in Place

Battery Cable

The battery connection is made at the ammeter. The end of the battery cable with the connecting lug is secured to one of the posts at the back of the ammeter in the instrument panel.

The other end of the battery cable has a fuse receptacle with bayonet fitting. Insert the fuse shield and fuse into the receptacle and connect it to the bayonet pin connector in the end of the battery lead coming from the chassis case as shown in Fig. 11.

Fuse

A 20 ampere automobile fuse is used in the battery cable. This fuse is placed in an insulating shield and is in the receptacle provided for it at the chassis end of the battery cable. CAUTION—Be sure the fuse shield is on the fuse before the latter is inserted in the receptacle. *If a fuse blows, do not replace it without first investigating the cause.*

Bolting Chassis in Place

Place the nuts and flat washers on the mounting bolts and put the chassis in place on the dash, extending the mounting bolts through the drilled holes in the dash.

On one of the mounting bolts assemble the extra shakeproof lockwasher as shown in Fig. 9. Then complete the assembly to the dash as illustrated.

After the chassis is in place, secure the flexible shafts and electrical cables into position at the nearest convenient point.

Advancing Generator Charging Rate

The installation of the automobile radio imposes an additional drain on the car storage battery. This can be compensated for by advancing the charging rate of the car generator. Check the state of charge of the storage battery about a week after the installation of the automobile radio is made and have the charging rate adjusted accordingly.

Readjusting Flexible Shafts

When the receiver is in position on the dash, loosen the flexible shaft casing set screws on the chassis. Allow the casing to position itself so that it does not bind. Then retighten the set screws.

©John F. Rider, Publisher

MODEL 6R Series
Schematic, Alignment

WELLS GARDNER & CO.

Power Consumption - - 6.5 Amperes at 6.3 Volts **Tuning Frequency Range - - - - 530-1650 KC**
Power Output - - - - - 3 Watts Undistorted

Sept. 1935

Osc. trimmer adjusted at 1650 kc. with condenser full open.
1st det. and antenna trimmers adjusted at 1400 kc.

GROUPS OF CIRCUIT ELEMENTS ENCLOSED IN DOTTED RECTANGLES COMPRISE DISTINCT MECHANICAL ASSEMBLIES.
CIRCUIT ELEMENTS ENCLOSED IN DOTTED CIRCLES DO NOT EXIST AS DISTINCT UNITS BUT OCCUR AS A RESULT OF THE MUTUAL POSITION OF OTHER CIRCUIT ELEMENTS OR THEIR PARTS.
THE CAPACITY OF "C" SHIELD IS 37 MMF. THE CAPACITY OF "D" SHIELD IS 85 MMF. AND THE CAPACITY OF "E" SHIELD IS 15 MMF.

C1	21 mmf.	C12	.10 mf. 180 V.	C23	.02 mf. 600 V.	R 1	17000 ohm 1.0 W.	R12	.50 Megohm .2 W.
C2	.05 mf. 180 V.	C13	70-150 mmf.	C24	.002 mf. 600 V.	R 2	20000 ohm .5 W.	R13	100000 ohm .2 W.
C3	Gang Trimmer	C14	250 mmf.	C25	.50 mf. 180 V.	R 3	.50 Megohm .2 W.	R14	150000 ohm Tone Control
C4	40 mmf.	C15	250 mmf.	C26	2000 mmf.	R 4	1.0 Megohm .2 W.	R15	50 ohm .5 W.
C5	Gang Trimmer	C16	.01 mf. 360 V.	C27	2000 mmf.	R 5	350 ohm .2 W.	R16	50 ohm .5 W.
C6	35 mmf.	C18	250 mmf.	C28	.01 mf. 360 V.	R 6	50000 ohm .2 W.		
C7	.10 mf. 360 V.			C29	.005 mf. 1600 V.	R 7	500000 ohm .2 W.	T 1	Antenna Trans.
C8	.10 mf. 180 V.	C19	.10 mf. 360 V.	C21	.50 mf. 180 V.	R 8	6000 ohm .2 W.	T 2	R. F. Interstage Trans.
C9	Gang Trimmer	C20	.01 mf. 360 V.	C27	4.0 mf. 25 V. } Electrolytic	R 9	2.0 Megohm Volume Control	T 3	1st I. F. Trans.
C10	70-150 mmf. } One	C21	.25 mf. 180 V.		5.0 mf. 350 V } Block	R10	150000 ohm .2 W.	T 4	2nd I. F. Trans.
C11	70-150 mmf. } Unit			C29	8.0 mf. 350 V }	R11	50000 ohm .2 W.	T 5	Output Trans.

T 6	Osc. Inductor
T 7	Power Trans.
L 1	Motor Noise Reactor
L 2	Pilot Light Reactor
L 3	Speaker Field S.J
L 4	Filament Reactor
L 5	Filter Choke
L 6	"B" Reactor
L 7	Vibrator Reactor

MODEL 6R Series
Voltage, Socket

WELLS - GARDNER & CO.

Trimmers, Coil Data
Resistance

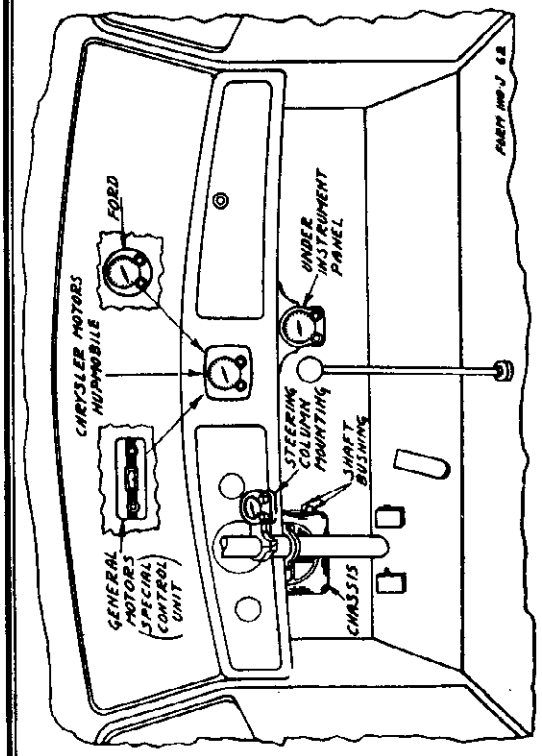

Fig. 5—Various Control Unit Mountings

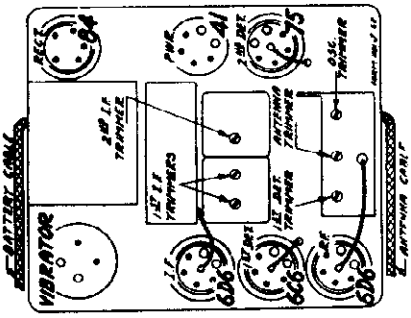

Fig. 2—Location of Tubes and Trimmers

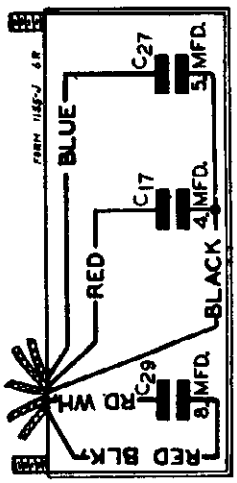

Fig. 4—Condenser Block—Internal Wiring

VOLTAGES AT SOCKETS

Antenna Disconnected **Battery 6 Volts Under Load**

Type of Tube	Function	Across Heater	Plate to Ground	Screen to Ground	Cathode to Ground	Cathode Current M. A.
6D6	R. F. Amp.	5.8	220	90	4.5	6.3
6C6	1st Det. Osc.	5.8	220	90	0	2.4
6D6	I. F. Amp.	5.8	220	90	4.5	6.3
75	2nd Det.	5.8	130(1)		1.2	0.3
41	Power	5.8	210	220	16(2)	25.3
84	Rectifier	5.8				50.0

(1) With 250,000 Ohm Meter
(2) As read across filter choke.

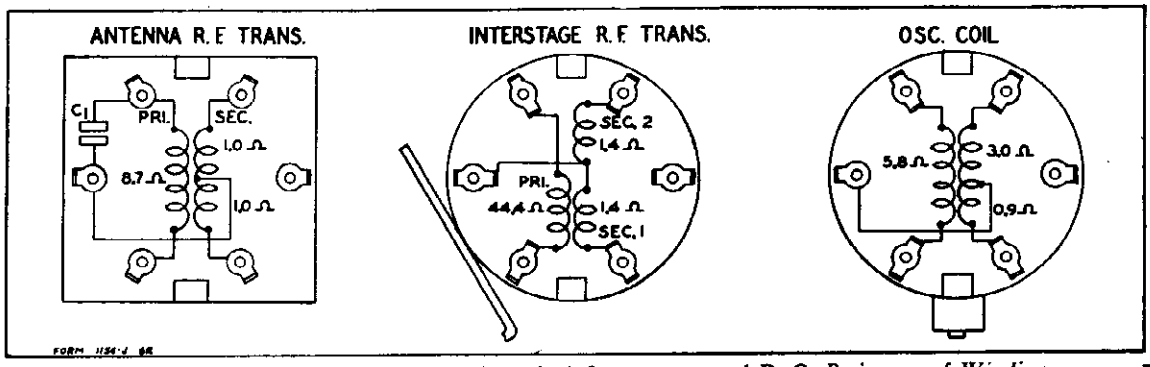

Fig. 3—R. F. and Oscillator Coil Base Terminal Arrangement and D. C. Resistance of Windings

D. C. Resistance of Windings

Following are the D. C. resistances of the various windings in the chassis. The values given below will vary slightly in different sets.

Part No.	Winding	Code	D. C. Resistance in Ohms
P-9A443	Antenna Transformer	T1	
	Primary Winding		8.7
	Secondary Winding--Either Portion		1.0
P-9A439	Interstage Transformer	T2	
	Primary Winding		44.4
	Secondary Winding—Either Portion		1.4
P-9A441	1st I. F. Transformer	T3	
	Primary Winding		93.5
	Secondary Winding		97.6
P-9A442	2nd I. F. Transformer	T4	
	Primary Winding		44.1
	Secondary Winding		49.6
P-12A227	Dynamic Speaker		
	Output Transformer Primary	T5	416.6
	Output Transformer Secondary	T5	Small
	Speaker Field	L3	5.3
	Speaker Voice Coil		Small
P-9A440	Oscillator Coils	T6	
	Grid Coil		
	Long Portion		3.0
	Short Portion		0.9
	Plate Coil		5.8
P-53X108	Power Transformer	T7	
	Primary Winding		
	Center Tap to Inside		Small
	Center Tap to Outside		Small
	Secondary Winding		
	Center Tap to Inside		200.
	Center Tap to Outside		200.
P-9A444	Motor Noise Reactor	L1	Small
P-9A448	Pilot Light Line Reactor	L2	Small
P-9A446	Filament Reactor	L4	Small
P-52X42	Filter Choke	L5	312.5
P-9A447	R. F. "B" Plate Reactor	L6	4.1
P-9A445	Vibrator Filter Reactor	L7	Small

©John F. Rider, Publisher

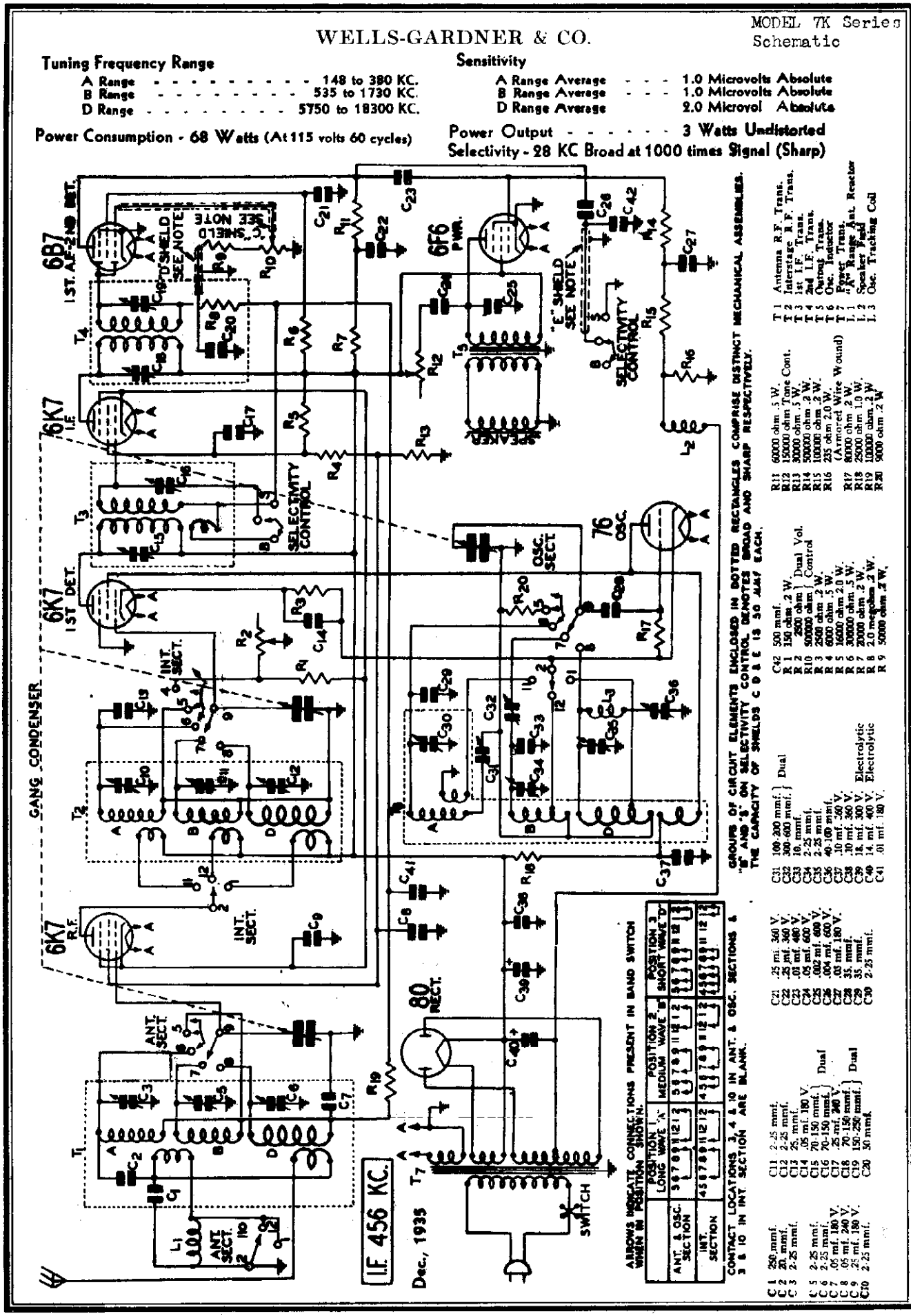

©John F. Rider, Publisher

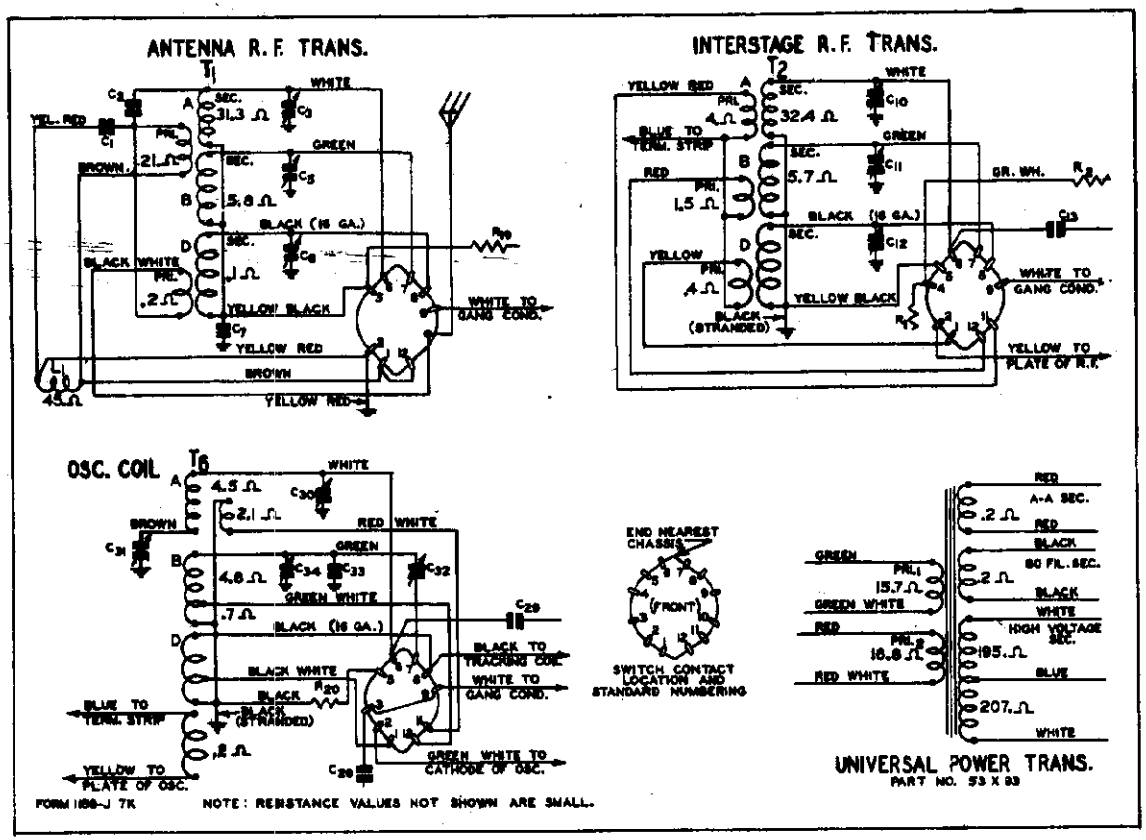

Fig. 4—Color Coding of Coil Wires and D. C. Resistance of Windings (Also see complete D. C. Resistance List in this Manual)

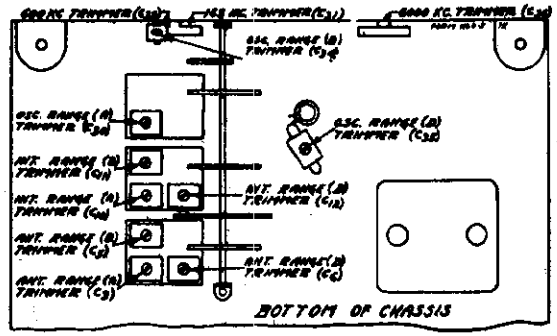

Fig. 3—Location of Trimmers

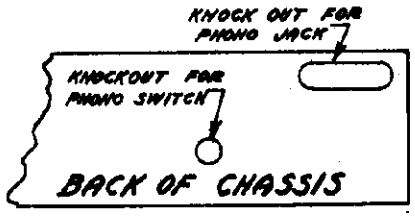

Fig. 8—Location of Phono Knockouts

Intermediate Frequency - - - - - - - 456 KC.

Speaker - - - - - - - - - - 6" and 8" Dynamic

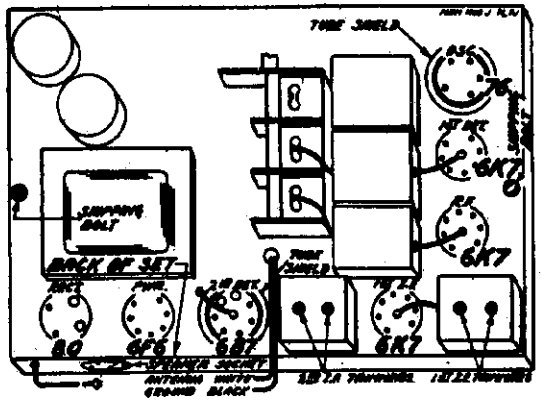

Fig. 5—Location of Tubes

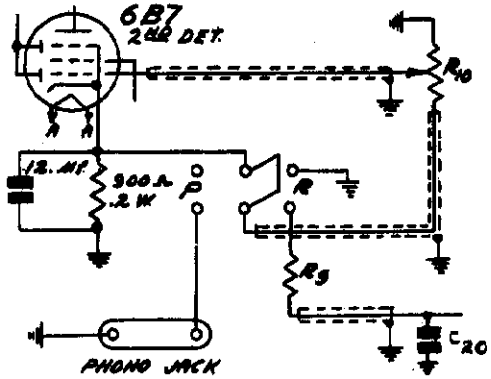

Fig. 7—Phonograph Connections

VOLTAGES AT SOCKETS
Line Voltage, 115 - Volume Control at Maximum
Antenna Shorted to Ground

Type of Tube	Function	Heater or Filam't	Plate to Ground	Screen to Ground	Cathode to Ground	Cathode Current M. A.
6K7	R.F.	6.0	250	110	3.0	9.0
6K7	1st Det.	6.0	250	100	8.3	3.3
76	Osc.	6.0	100			5.0
6K7	I.F.	6.0	250	137	3.0	11.0
6B7	2nd Det. & 1st A.F.	6.0	50(1)	40(1)		3.2
6F6	Power	.6.0	230	250	16.5(2)	36.0
80	Rectifier	4.8				72.0

(1) 500 volt scale (1000 ohms per volt) (2) Measured across R16.

WELLS-GARDNER & CO.

MODEL 7K Series
Alignment, Phono.
Resistance

Alignment and Calibration

Correct alignment is extremely important in connection with all wave receivers. The receivers are all properly aligned at the factory with precision instruments and realignment should not be attempted unless all other possible causes of the faulty operation have first been investigated and unless the service technician has the proper equipment.

A signal generator that will provide an accurately calibrated signal at 456, 380, 350, 165, 1730, 1500, 600, 18,300, 15,000 and 6000 KC and an output indicating meter are required. It will be practically impossible to align the receiver if unsatisfactory apparatus is used. If a station is tuned in with the selectivity control in the broad position and this control is then turned to the sharp position, the station may disappear. This is not an indication that the receiver is out of alignment.

Use a non-metallic screwdriver for the adjustments. The complete procedure is as follows:

I. F. Adjustment

Set the signal generator for a signal of 456 KC.

Connect the output of the signal generator through a .1 mf. condenser to the grid of the 1st detector.

Connect the ground lead of the receiver to the ground post of the signal generator.

Turn the band selector to the Range B position (medium wave band—green dial color).

Turn the selectivity control to the sharp position and keep it in this position for all adjustments.

Turn the volume control to the maximum position.

Attenuate the signal from the signal generator to prevent the levelling-off action of the A. V. C.

Then adjust the four I.F. trimmers until maximum output is obtained. The adjusting screws for these condensers are reached from the top of the chassis, and the location is shown in Fig. 5.

Range A Alignment

380 KC Adjustment

Set the signal generator for 380 KC.

Turn the rotor of the tuning condenser to the full open position.

Turn the band selector to the Range A position (long wave band—purple dial color).

Connect the antenna lead of the receiver through a 200 mmf. condenser to the output of the signal generator.

For this and all subsequent adjustments keep the volume control at the maximum position and attenuate the signal from the signal generator to prevent A.V.C. action.

Adjust the oscillator Range A trimmer (C30) until maximum output is obtained. The location of this trimmer is shown in Fig. 3

350 KC Adjustment

Set the signal generator for 350 KC.

Turn the rotor of the tuning condenser carefully until maximum output is obtained.

Adjust the interstage Range A trimmer (C10) and antenna Range A trimmer (C3) to maximum.

Do not change the setting of the oscillator Range A trimmer.

165 KC Adjustment

Set the signal generator for 165 KC.

Turn the tuning condenser rotor until maximum output is obtained.

Turn the rotor slowly back and forth at the same time adjusting the 165 KC trimmer until the peak of greatest intensity is obtained. See Fig. 3 for location of this trimmer.

Range B Alignment

1730 KC Adjustment

Set the signal generator for 1730 KC.

Turn the rotor of the tuning condenser to the full open position.

Turn the band selector to the Range B position (medium wave band—green dial color).

Keep the antenna lead of the receiver connected through the 200 mmf. condenser to the output of the signal generator.

Adjust the oscillator Range B trimmer (C34) until maximum output is obtained. The location of this trimmer is shown in Fig. 3.

1500 KC Adjustment

Set the signal generator for 1500 KC.

Turn the rotor of the tuning condenser carefully until maximum output is obtained.

Loosen the pointer set screw and set the large pointer at the 1500 KC mark on the medium wave band scale. Retighten the set screw.

Adjust the interstage Range B trimmer (C11) and antenna Range B trimmer (C3) to maximum.

Do not change the setting of the oscillator Range B trimmer.

600 KC Adjustment

Set the signal generator for 600 KC.

Turn the tuning condenser rotor until maximum output is obtained.

Turn the rotor slowly back and forth at the same time adjusting the 600 KC trimmer until the peak of greatest intensity is obtained. See Fig. 3 for location of this trimmer.

Range D Alignment

18,300 KC Adjustment

Set the signal generator for 18,300 KC.

Connect the antenna lead of the receiver through a 400 ohm resistor to the output of the signal generator.

Turn the rotor of the tuning condenser to the full open position.

Turn the band selector to the Range D position (short wave band—red dial color).

Adjust the oscillator Range D trimmer (C35) until maximum output is obtained. See Fig. 3 for location of this trimmer.

15,000 KC Adjustment

Set the signal generator for 15,000 KC.

Turn the rotor of the tuning condenser carefully until maximum output is obtained.

Adjust the interstage Range D trimmer (C12) and antenna Range D trimmer (C6) to maximum.

When adjusting the interstage Range D trimmer, it will be necessary at the same time to turn the tuning condenser rotor slowly back and forth until the peak of greatest intensity is obtained.

Then go back and repeat the procedure as given for the 18,300 KC adjustment. If it is found necessary to make any appreciable change in the setting of the oscillator Range D trimmer, the 15,000 KC adjustment must be repeated.

Do not make any further change in the setting of the oscillator Range D trimmer.

6000 KC Adjustment

Set the signal generator for 6000 KC.

Turn the tuning condenser rotor until maximum output is obtained.

Turn the rotor slowly back and forth at the same time adjusting the 6000 KC trimmer until the peak of greatest intensity is obtained. See Fig. 3 for location of this trimmer.

Servicing R. F. Coil Assemblies

The R. F. transformers and oscillator coil assemblies in this receiver are sold complete with can. This is due to the fact that the trimmers are soldered to the can, and cannot be easily disassembled.

The lead colors and resistances of the various windings in each assembly are shown in Fig. 4.

If it is ever necessary to remove one of coil assemblies from the can, proceed as follows: First remove the nuts from the screws at the top of the can. The outside lug on the trimmer condenser is inserted in a slot in the coil can, and this lug is soldered into position.

Apply a soldering iron to the can at the point of the soldered connection. Then with a screw driver lift up on the outside edge of the trimmer (edge soldered to can) until the trimmer is clear of the can. After the trimmers are all unsoldered, the coil can be taken out.

Twenty-five Cycle Receivers

The twenty-five cycle receiver can be operated satisfactorily from a sixty cycle power supply. However, the reverse is not true, the sixty cycle receiver cannot be operated from a twenty-five cycle power supply.

A 115-230 Volt, 40 to 60 cycle as well as other power transformers with special power ratings are also available for this model.

Phonograph Connections

Phonograph connections can be made as shown in Fig. 7. The parts required are shown in the parts list. Knockouts are provided in the back panel of the chassis for mounting the phono jack and phono switch—See Fig. 8.

For mounting the 12 mfd. 25 volt dry electrolytic condenser, two No. 27 drill holes should be drilled in the side of the chassis directly below the wet electrolytic condensers. These holes are 1¼" from the bottom, ¾" and 3¾" from the front of chassis. The ground lug which extends out from the side of the chassis should be bent back into the chassis wall.

Mount the single lug insulated terminal strip (P-4A49) on the mounting bolt of the double lug insulated terminal strip (located on the rear panel, directly in back of the band selector switch).

The connections are made by opening the diode return circuit at the volume control. Unsolder the 50,000 ohm resistor R9 from the lug at the volume control and the terminal strip. Also unsolder from this terminal strip the shielded lead which runs to the 2nd I.F. transformer. Cut this shielded lead to length and connect it to the lug on the new terminal strip (P-4A49). Connect one side of the 50,000 ohm resistor R-9 to the same lug and the other side to the phono switch — see Fig. 7.

The extra shielded lead which is provided should be connected from the volume control to the phono switch as shown in Fig. 7. Be sure to remove the shielding from the portion of this lead that passes over the volume control.

Remove the ground from the cathode terminal of the 6B7 2nd detector tube socket by bending the chassis ground lug away from this terminal. Be sure to solder back to this lug any leads that were connected to it (not including the cathode connection).

Connect one side of the 12 mfd. 25 volt electrolytic condenser to ground and the other side of this condenser to the cathode of the 6B7 2nd detector tube socket and to the phono switch as shown in Fig. 7. To this same terminal on the phono switch connect the 900 ohm resistor. The other side of the resistor is connected to ground. Complete the other connections as illustrated in Fig. 7.

A high impedance pickup should be used. If a low impedance pickup is used a step-up transformer will be required for sufficient volume. The volume control and tone control of the set will regulate the phono volume and tone.

D. C. Resistance of Windings

Refer to Fig. 4.

Part No.	Item	Coils	D.C. Resistance in Ohms
P-9A467	Antenna R.F. Transformer	T1	
	Range "A" and "B" Primary Winding		21.0
	Range "D" Primary Winding		0.2
	Range "A" Secondary Winding		21.5
	Range "B" Secondary Winding		3.8
	Range "D" Secondary Winding		4.1
P-9A468	Interstage R.F. Transformer	T2	
	Range "A" Primary Winding		4.0
	Range "B" Primary Winding		1.5
	Range "D" Primary Winding		0.4
	Range "A" Secondary Winding		22.5
	Range "B" Secondary Winding		3.7
	Range "D" Secondary Winding		Small
P-9A469	Oscillator Coils	T6	
	Range "A" Grid Coil		
	White to Brown		4.5
	Range "A" Cathode Coil		
	Red White to Ground		2.1
	Range "B" Grid Coil		
	Green White tap to Green		4.6
	Green White tap to Ground		0.7
	Range "D" Grid Coil		
	Black White tap to Black		Small
	Black White tap to Ground		Small
	Oscillator Plate Coil		8.5
P-9A470	1st I.F. Transformer	T3	
	Primary Winding		11.5
	Secondary Winding		11.0
	Coupling Winding		0.5
P-9A461	2nd I.F. Transformer	T4	
	Primary Winding		11.5
	Secondary Winding		4.3
P-12A211	Dynamic Speaker (8")		
	Speaker Field	L2	1050.0
	Speaker Voice Coil		4.1
	Output Transformer	T5	
	Primary Winding		518.0
	Secondary Winding		1.0
P-5X593	115-230 Volt; 40-60 Cycle Power Transformer	T7	
	Primary Windings (Separately)		
	Red White to Red		16.5
	Green White to Green		15.7
	Primary Windings in Parallel (115 Volt Operation)		
	Green White and Red White to Green and Red		8.1
	Primary Windings in Series (230 Volt Operation)		
	Red White to Green		32.5
	Secondary Windings		
	Tube Filament Winding (5 V)		0.2
	6v Pilot Light Winding		0.3
	Black Tracer Winding		
	Center Tap to Tracer		355.0
	Center Tap to Outside		207.5
P-9A463	"A" Range Antenna Resistor	L1	45.0
P-9A391	High Frequency Oscillator Tracking Coil	L3	1.1

Switch Contact Location Numbering

A standard arrangement for switch contact location numbering has been adopted. This numbering is illustrated in Fig. 4. In contact locations not used, the number applying to that particular location is not employed.

©John F. Rider, Publisher

MODEL 90 Series
Schematic

WELLS - GARDNER & CO.

Input Voltages

"A" Battery - - - - - - 2 Volts (0.74 Amperes)
"B" Batteries - - - - - - - - - - 135 Volts
"C" Batteries - - - - - - 4½, 9 and 16½ Volts

Power Output - - - - - - - 1.5 Watts Undistorted
Selectivity - 20 KC Broad at 1000 times Signal (Sharp)
Intermediate Frequency - - - - - - - - 456 KC.
Speaker - - - - 8" Permanent Magnet Dynamic

Tuning Frequency Range

B Range - - - - - - - - - - 535 to 1730 KC.
C Range - - - - - - - - - - 1680 to 4800 KC.
D Range - - - - - - - - - - 5650 to 16000 KC.

Sensitivity

B Range Average - - - - 1.0 Microvolts Absolute
C Range Average - - - - 4.0 Microvolts Absolute
D Range Average - - - - 7.0 Microvolts Absolute

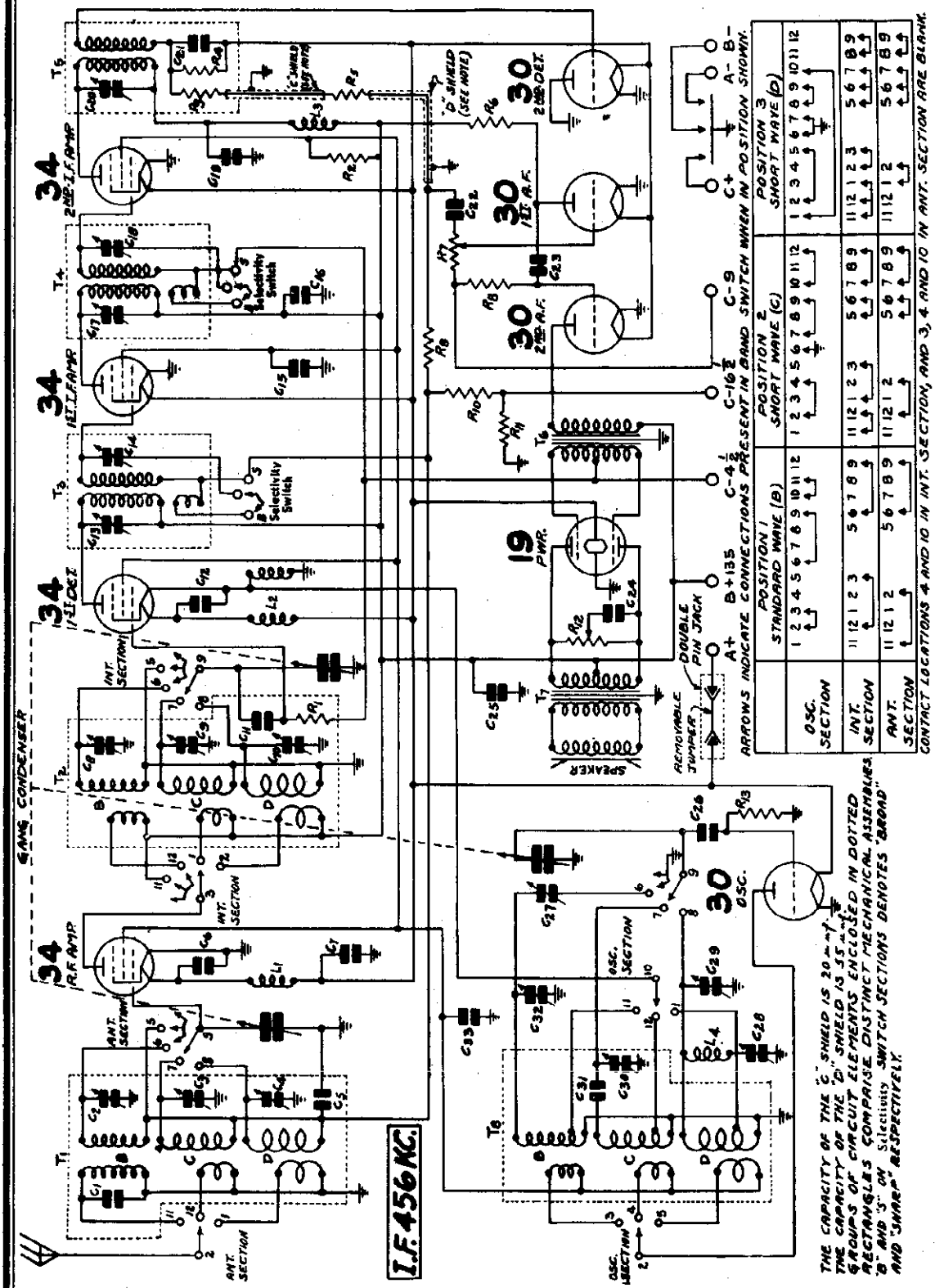

	POSITION 1 STANDARD WAVE (B)	POSITION 2 SHORT WAVE (C)	POSITION 3 SHORT WAVE (D)
OSC. SECTION	1 2 3 4 5 6 7 8 9 10 11 12	1 2 3 4 5 6 7 8 9 10 11 12	1 2 3 4 5 6 7 8 9 10 11 12
INT. SECTION	11 12 1 2 3 5 6 7 8 9	11 12 1 2 3 5 6 7 8 9	11 12 1 2 3 5 6 7 8 9
ANT. SECTION	11 12 1 2 5 6 7 8 9	11 12 1 2 5 6 7 8 9	11 12 1 2 5 6 7 8 9

C1 250 mmf.
C2 2-25 mmf.
C3 2-25 mmf.
C4 2-25 mmf.
C5 .05 mf. 180 V.
C6 .05 mf. 180 V.
C7 .25 mf. 180 V.
C8 2-25 mmf.
C9 2-25 mmf.
C10 2-25 mmf.
C11 35 mmf.
C12 .05 mf. 180 V.
C13 150-250 mmf. } ONE
C14 150-250 mmf. } UNIT
C15 4.0 mf. 150 V. } ELECTRO-
C16 8.0 mf. 150 V. } LYTIC
C17 150-250 mmf. } ONE
C18 150-250 mmf. } UNIT
C19 .05 mf. 180 V.
C20 70-150 mmf.
C21 70 mmf.
C22 .01 mf. 360 V.
C23 .006 mf. 600 V.
C24 .05 mf. 240 V.
C25 .25 mf. 180 V.
C26 35 mmf.
C27 300-600 mmf. } ONE
C28 40-100 mmf. } UNIT
C29 2-25 mmf.
C30 2-25 mmf.
C31 1400 mmf.
C32 2-25 mmf.
C33 .25 mf. 180 V.

R 1 1.0 Megohm .2 W.
R 2 9,000 Ohm .5 W.
R 3 100,000 Ohm .2 W.
R 4 300,000 Ohm .2 W.
R 5 100,000 Ohm .2 W.
R 6 100,000 Ohm ½ W.
R 7 2.0 Megohm Vol. Cont.
R 8 1.0 Megohm .2 W.
R 9 2.0 Megohm .2 W.
R10 5.0 Megohm .2 W.
R11 15,000 Ohm .2 W.
R12 150,000 Ohm Tone Cont.
R13 100,000 Ohm .2 W.

T 1 Ant. R.F. Trans.
T 2 Int. R.F. Trans.
T 3 1st. I.F. Trans.
T 4 2nd. I.F. Trans.
T 5 3rd. I.F. Trans.
T 6 Push-Pull Input Trans.
T 7 Audio Output Trans.
T 8 Osc. Inductors
L 1 Single Filament Reactor
L 2 Double Filament Reactor
L 3 2nd. I.F. Plate Reactor
L 4 Osc. Tracking Coil

Coil Data, Trimmers

WELLS-GARDNER & CO.

MODEL 9C Series
Voltage, Socket

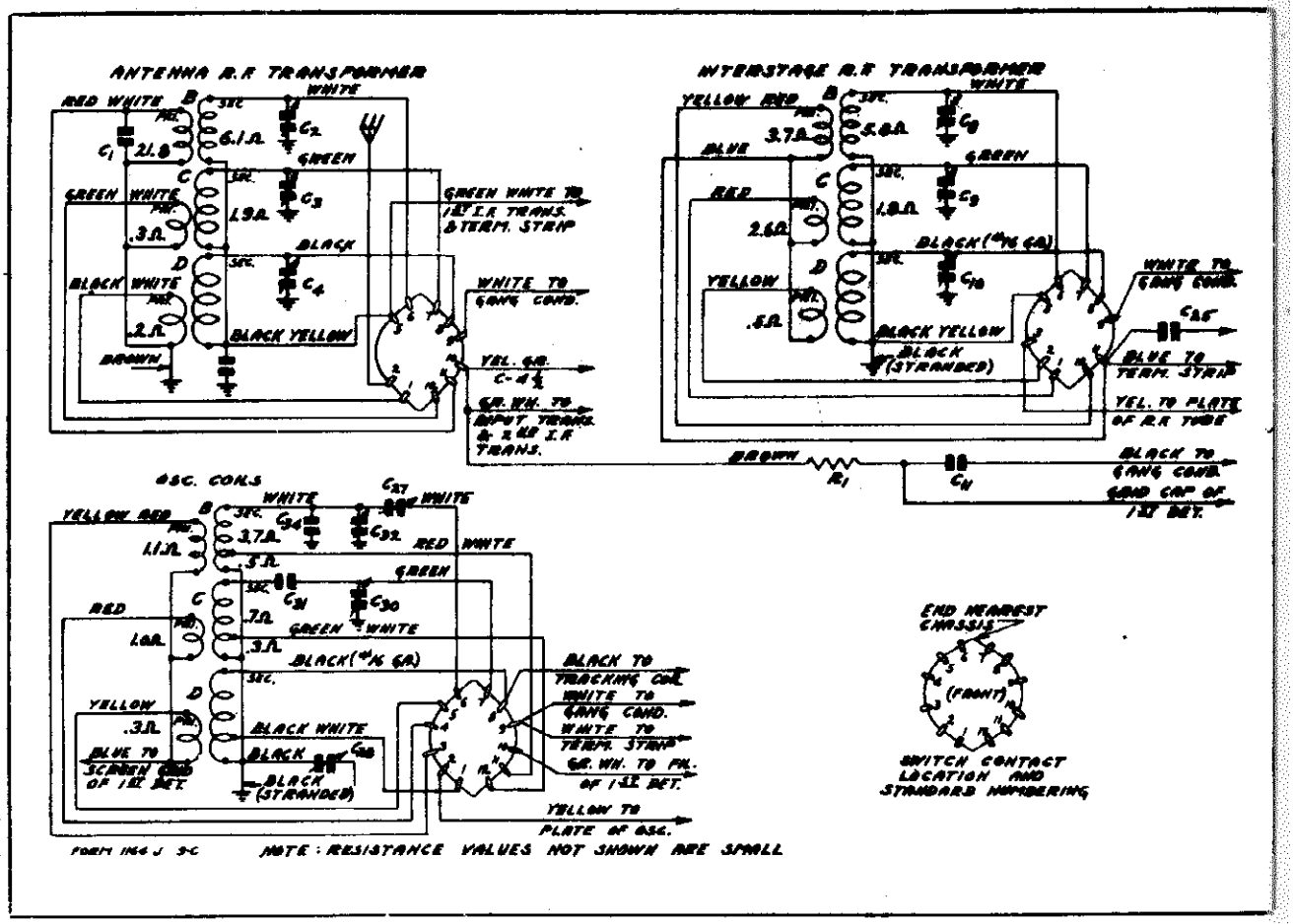

Fig. 10—Color Coding of Coil Wires and D. C. Resistance of Windings. (Also See Complete D. C. Resistance List Below)

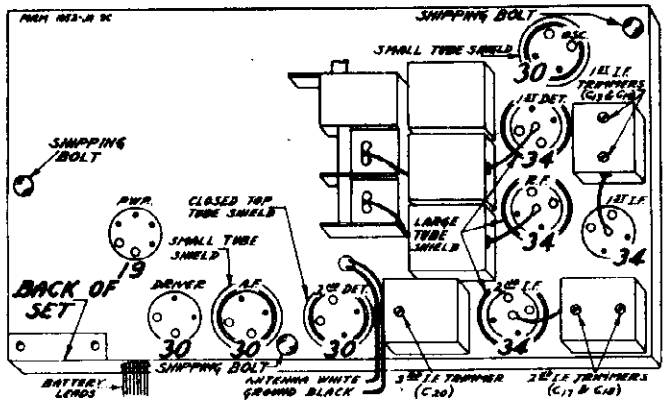

Fig. 11—Location of Tubes

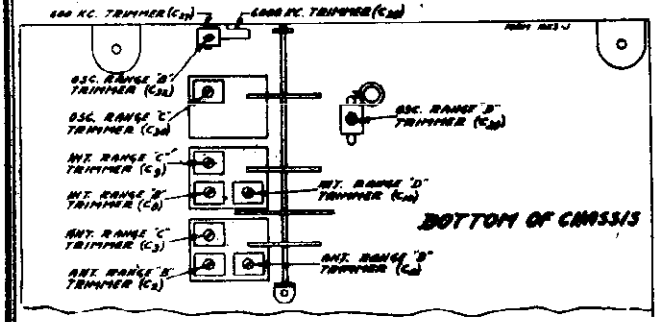

Fig. 9—Location of Trimmers

VOLTAGES AT SOCKETS
Antenna Shorted to Ground

Type of Tube	Function	Across Filament	Plate to Ground	Screen to Ground	Control Grid to Ground	Normal Plate M. A.
34	R. F.	2.0	135	80	4.7(1)	2.4
34	1st. Det.	2.0	135	80	4.5(2)	2.2
30	Oscillator	2.0	80			3.4
34	1st I. F.	2.0	135	80	4.7(1)	2.4
34	2nd I. F.	2.0	135	80	4.5	2.2
30	2nd Det.	2.0				
30	1st Audio	2.0	90		9.0(3)	0.17
30	2nd Audio	2.0	132		9.0(4)	2.5
19	Power	2.0	135		4.5	1.5 (per plate)

(1) Computed figure—cannot be read with ordinary voltmeter.

(2) As read at 4½ volt tap on "C" battery.

(3) Volume Control at minimum.

(4) As read at 9 volt tap on "C" battery.

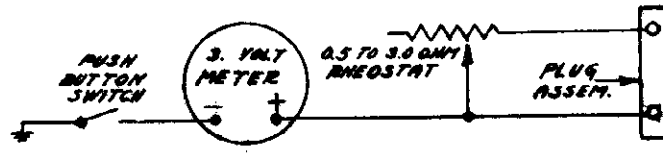

Fig. 6—Schematic Diagram of Voltage Regulator

©John F. Rider, Publisher

Alignment and Calibration

A signal generator that will provide an accurately calibrated signal at 456, 1730, 1500, 600, 4800, 4200, 16,000, 15,000 and 6000 KC and an output indicating meter are required. It will be practically impossible to align the receiver if unsatisfactory apparatus is used. If a station is tuned in with the selectivity control in the broad position and this control is then turned to the sharp position, the station may disappear. This is not an indication that the receiver is out of alignment.

Use a non-metallic screwdriver for the adjustments. The complete procedure is as follows:

I. F. Adjustment

Set the signal generator for a signal of 456 KC.

Connect the output of the signal generator through a 0.1 mf. condenser to the switch end of condenser C11—see Fig. 2. There is a lead which goes to the lug on top of the center stator section of the tuning condenser—see Fig. 11. The connection can be made at this lug.

Connect the ground lead of the receiver to the ground post of the signal generator.

Turn the band selector to the Range B position (standard wave band—purple dial color).

Turn the selectivity control to the sharp position and keep it in this position for all adjustments.

Turn the volume control to the maximum position.

Attenuate the signal from the signal generator to prevent the levelling-off action of the A.V.C.

Then adjust the five I.F. trimmers until maximum output is obtained. The adjusting screws for these condensers are reached from the top of the chassis, and the location is shown in Fig. 11.

Range B Alignment

1730 KC Adjustment

Set the signal generator for 1730 KC.

Turn the rotor of the tuning condenser to the full open position.

Keep the band selector in the standard wave position.

Connect the antenna lead of the receiver through a 200 mmf. condenser to the output of the signal generator.

For this and all subsequent adjustments keep the volume control at the maximum position and attenuate the signal from the signal generator to prevent A.V.C. action.

Adjust the oscillator Range B trimmer (C32) until maximum output is obtained. The location of this trimmer is shown in Fig. 9.

1500 KC Adjustment

Set the signal generator for 1500 KC.

Turn the rotor of the tuning condenser carefully until maximum output is obtained.

Loosen the pointer set screw and set the large pointer at the 1500 KC mark on the standard wave band scale. Retighten the set screw.

Adjust the interstage Range B trimmer (C8) and antenna Range B trimmer (C2) to maximum.

Do not change the setting of the oscillator Range B trimmer.

600 KC Adjustment

Set the signal generator for 600 KC.

Turn the tuning condenser rotor until maximum output is obtained.

Turn the rotor slowly back and forth at the same time adjusting the 600 KC trimmer until the peak of greatest intensity is obtained. See Fig. 9 for location of this trimmer.

Be sure to use a non-metallic screwdriver for this adjustment.

Range C Alignment

4800 KC Adjustment

Set the signal generator for 4800 KC.

Connect the antenna lead of the receiver through a 400 ohm resistor to the output of the signal generator.

Turn the rotor of the tuning condenser to the full open position.

Turn the band selector in the Range C position (1st short wave band—green dial color).

As mentioned above, keep the volume control at the maximum position and attenuate the signal from the signal generator to prevent A.V.C. action.

Adjust the oscillator Range C trimmer (C30) until maximum output is obtained. See Fig. 9 for location of this trimmer.

4200 KC Adjustment

Set the signal generator for 4200 KC.

Turn the rotor of the tuning condenser carefully until maximum output is obtained.

Adjust the interstage Range C trimmer (C9) and antenna Range C trimmer (C3) to maximum.

Do not change the setting of the oscillator Range C trimmer.

Range D Alignment

16,000 KC Adjustment

Set the signal generator for 16,000 KC.

Keep the antenna lead of the receiver connected through the 400 ohm resistor to the output of the signal generator.

Turn the rotor of the tuning condenser to the full open position.

Turn the band selector to the Range D position (2nd short wave band—red dial color).

As mentioned above, keep the volume control at the maximum position and attenuate the signal from the signal generator to prevent A.V.C. action.

Adjust the oscillator Range D trimmer (C29) until maximum output is obtained. See Fig. 9 for location of this trimmer.

15,000 KC Adjustment

Set the signal generator for 15,000 KC.

Turn the rotor of the tuning condenser carefully until maximum output is obtained.

Adjust the interstage Range D trimmer (C10) and antenna Range D trimmer (C4) to maximum.

When adjusting the interstage Range D trimmer, it will be necessary at the same time to turn the tuning condenser rotor slowly back and forth until the peak of greatest intensity is obtained.

Then go back and repeat the procedure as given for the 16,000 KC adjustment. If it is found necessary to make any appreciable change in the setting of the oscillator Range D trimmer, the 15,000 KC adjustment must be repeated.

Do not make any further change in the setting of the oscillator Range D trimmer.

6000 KC Adjustment

Set the signal generator for 6000 KC.

Turn the tuning condenser rotor until maximum output is obtained.

Turn the rotor slowly back and forth at the same time adjusting the 6000 KC trimmer until the peak of greatest intensity is obtained. See Fig. 9 for location of this trimmer.

Use a non-metallic screwdriver for this adjustment.

Testing Batteries

If the receiver does not operate satisfactorily test the batteries under load. A high resistance meter is required for the "B" and "C" voltages. If any of the batteries are considerably below their rated voltage, new ones should be used. When the "B" batteries are replaced the "C" batteries should also be replaced. The reason for this is that the "C" drain is such that the "C" batteries are run down in about the same time as the "B" batteries.

"A" Battery and Regulator

This receiver is designed to operate with a 2 volt storage cell, but may be operated with a 3 volt dry "A" battery if used with a voltage regulator. The receiver may also be used with an air cell "A" battery provided a series resistor is used to reduce the voltage to the proper level of 2 volts for the tube filaments. Although the voltage regulator mentioned above can be used, the series resistor is cheaper and is satisfactory as the voltage of one of these batteries drops very little during the useful life of the battery.

D. C. Resistance of Windings

Refer to Figs. 10 & 2

Following are the D. C. resistances of the various coil windings in the chassis. The values given below will vary slightly in different sets.

Part No.	Item	Code	D. C. Resistance in Ohms
P-9A417	Antenna R. F. Transformer	T1	
	Range B Primary Winding		21.8
	Range C Primary Winding		0.3
	Range D Primary Winding		0.2
	Range B Secondary Winding		6.1
	Range C Secondary Winding		1.9
	Range D Secondary Winding		Small
P-9A419	Interstage R. F. Transformer	T2	
	Range B Primary Winding		3.7
	Range C Primary Winding		2.6
	Range D Primary Winding		0.5
	Range B Secondary Winding		5.8
	Range C Secondary Winding		1.8
	Range D Secondary Winding		Small
P-9A406	Oscillator Inductors	T3	
	Range B Plate Coil		1.1
	Range C Plate Coil		1.8
	Range D Plate Coil		0.3
	Range B Grid Coil		
	Red White Tap to White		3.7
	Red White Tap to Ground		0.5
	Range C Grid Coil		
	Green White Tap to Green		0.7
	Green White Tap to Ground		0.1
P-9A406	Oscillator Inductors cont'd	T3	
	Range D Grid Coil		
	Black White Tap to Black		Small
	Black White Tap to Ground		Small
P-9A407	1st I. F. Transformer	T4	
	Primary Winding		8.9
	Secondary Winding		8.9
	Coupling Winding		0.1
P-9A408	2nd I. F. Transformer	T4	
	Primary Winding		8.9
	Secondary Winding		8.9
	Coupling Winding		0.1
P-9A409	3rd I. F. Transformer	T5	
	Primary Winding		9.9
	Secondary Winding		27.3
P-9BX11	Audio Input Transformer	T6	
	Primary Winding		1025.0
	Secondary Winding		
	Center Tap to Inside		280.0
	Center Tap to Outside		430.0
P-9BA324	Permanent Magnet Dynamic Speaker		
	Speaker Voice Coil		1.6
	Audio Output Transformer	T7	
	Primary Winding		
	Center Tap to Inside		199.2
	Center Tap to Outside		204.8
	Secondary Winding		Small
P-9A391	Single Filament Reactor	L1	Small
P-9A410	Double Filament Reactor—Either Section	L2	Small
P-9A420	2nd I. F. Plate Isolating Reactor	L3	25.9
P-9A391	High Frequency Oscillator Tracking Coil	L4	1.9

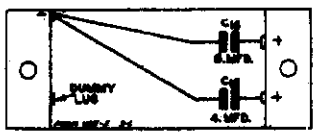

Fig. 12—Condenser Block—Internal Wiring

©John F. Rider, Publisher

MODEL S-691
Schematic

WESTERN AUTO SUPPLY CO.

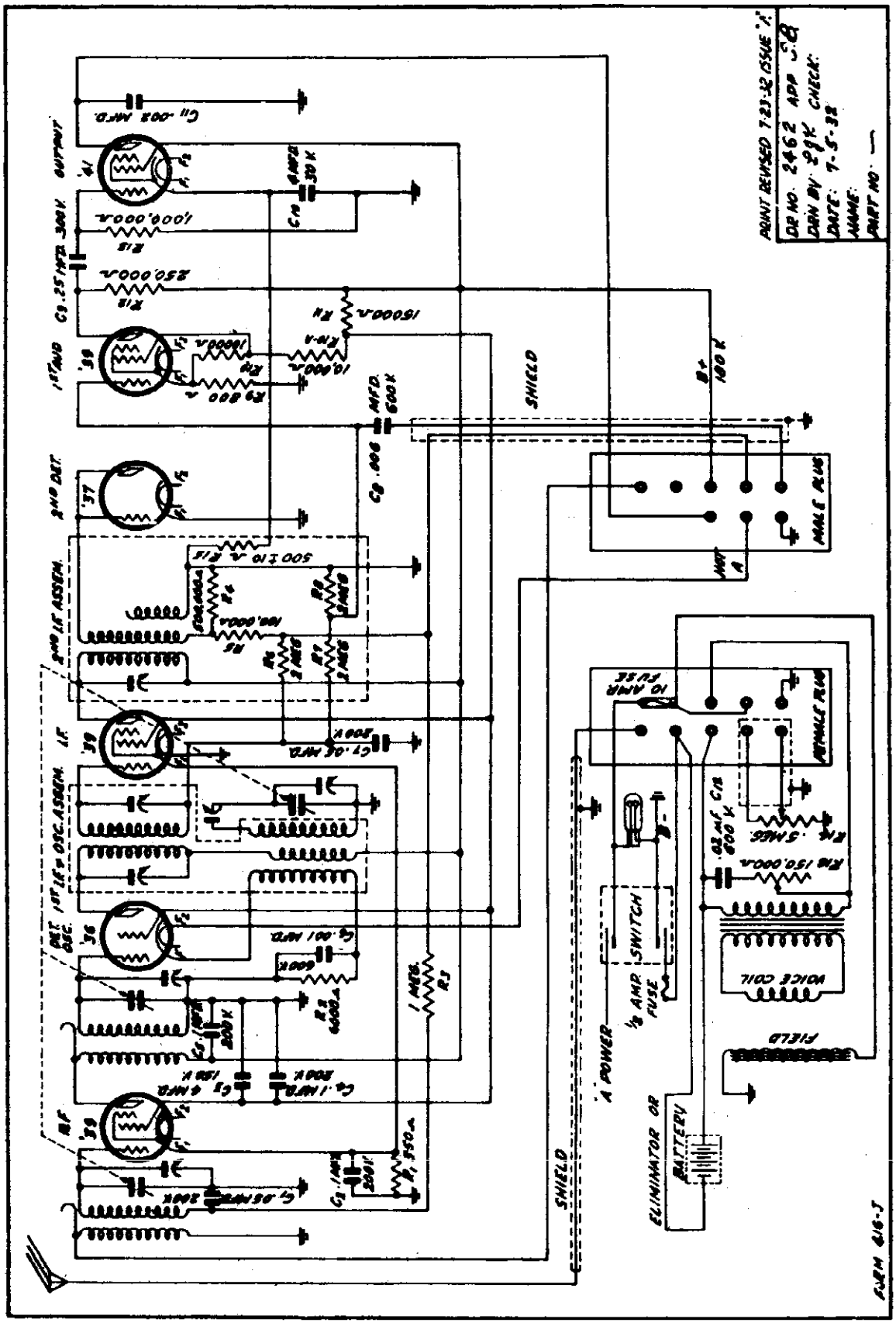
SHIELD
SHIELD
A POWER
1/2 AMP. FUSE
SWITCH
VOICE COIL
FIELD
ELIMINATOR OR BATTERY
MALE PLUG
FEMALE PLUG
10 AMP. FUSE
1ST DET.
2ND DET.
2ND I.F. ASSEM.
I.F.
1ST R.F. OSC. ASSEM.
R.F.
1ST AND 2ND AUDIO
OUTPUT
250,000 A.
150000 A.
10,000 A.
180 V.
300 V.
AVC.
600 V.
500 IN A.
100,000 A.
150,000 A.
.5 MEG.
.02 mf 400 V.
.1 MEG.
.05 MFD.
.006 MFD.
.01 MFD.
.1 MFD.
.25 MFD.
.03 MFD.
.05 MFD.
.1 MFD.
.25 MFD.
.5

MODEL S-716
MODEL S-717
Schematics

WESTERN AUTO SUPPLY CO.

Model S-716 60 ~ & 25 ~

IF PEAK 175 KC.

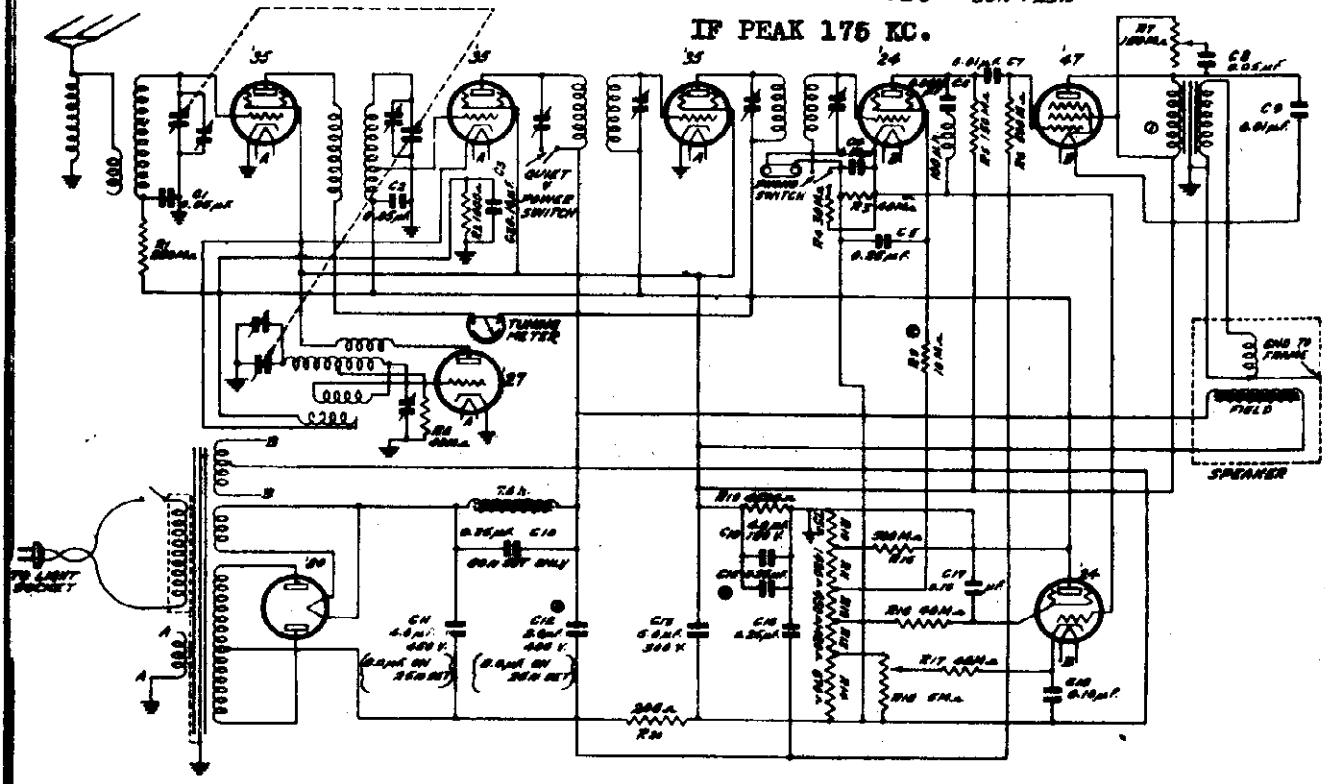

Model S-717 60 & 25 CYCLE

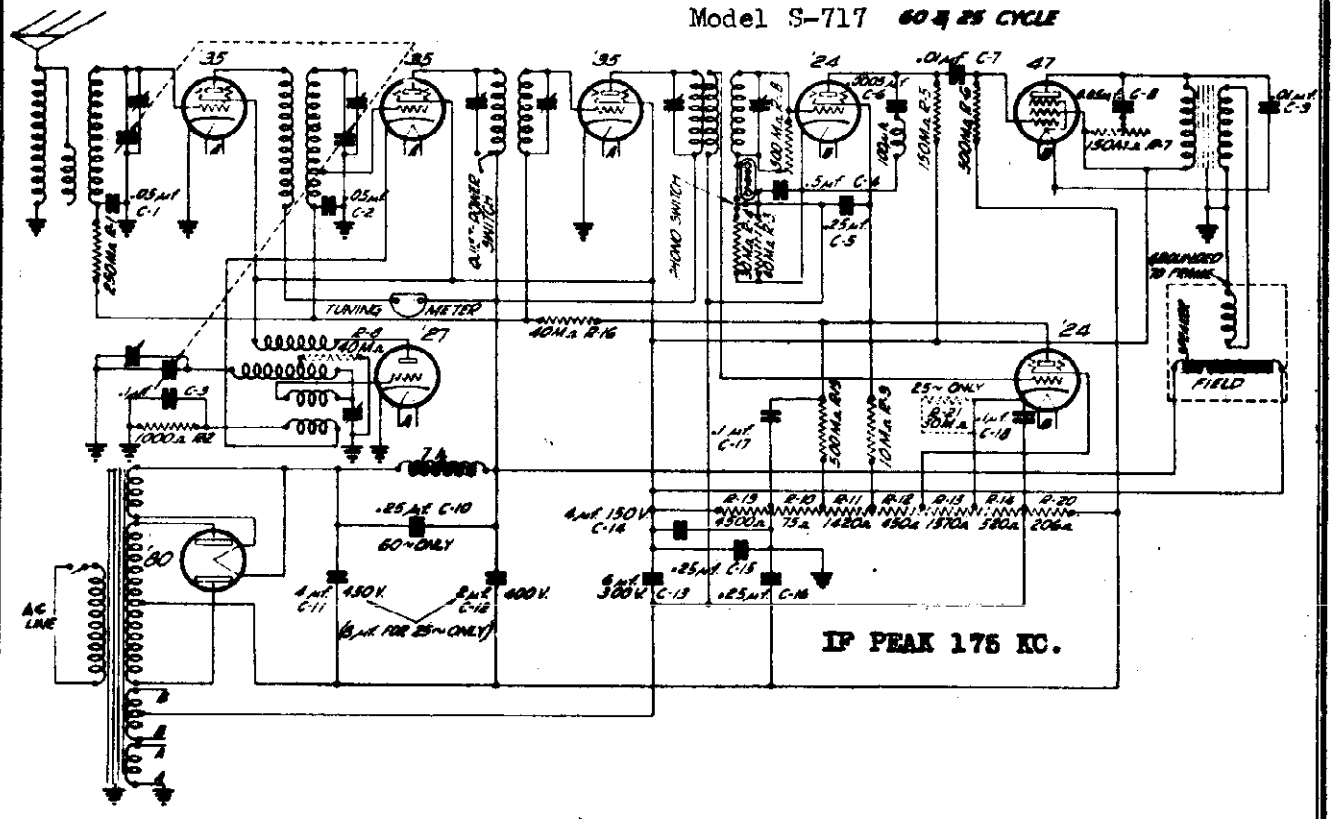

IF PEAK 175 KC.

©John F. Rider, Publisher

WESTERN AUTO SUPPLY CO.

MODEL S-716
MODEL S-717
Voltage, Socket
Alignment

A modulated test oscillator and an output meter MUST be used when aligning this receiver to insure accurate alignment. It is important that the oscillator deliver a signal at exactly 175 K.C. in addition to frequencies in the broadcast band.

The adjustable condensers which tune the primaries and secondaries of the I.F. transformers are adjusted by inserting a screw driver through the holes in the chassis base directly below the I.F. transformer assemblies.

A trimmer condenser is mounted over each section in the gang and is adjusted by turning the screw located under the hole in the top of the gang shield.

The oscillator 600 K.C. tracking condenser is on the back of the chassis near the "QUIET-POWER" switch.

Make each adjustment in the order given below or the receiver may be thrown further out of alignment and it will then be a difficult task to align it properly.

The receiver and test oscillator must be well grounded and the output kept within the range of the output meter at all times.

All shields must be in place when making the adjustments.

INTERMEDIATE CIRCUITS.—Tune the test oscillator to exactly 175 K.C., and connect its output to the grid of the first detector tube after removing the clip on the tip of the tube. Connect the output meter across the secondary of the speaker coupling transformer and then adjust all four condensers which tune the intermediate transformers, for the greatest deflection on the output meter. Check the settings of all four condensers to make certain the maximum output has been obtained.

When the above instructions have been followed remove the test oscillator coupling and replace the grid clip on the tip of the first detector tube.

GANG CONDENSERS.—Turn the gang condenser plates all the way in and see that the dial pointer is on the first dial division point below 550 K.C.

Tune the test oscillator to 1,400 K.C., turn the dial to read 1,400 K.C., and then adjust each gang condenser trimmer for maximum output.

OSCILLATOR.—Tune the test oscillator to 600 K.C., and tune the receiver to the signal. Disconnect the output meter and then rotate the adjusting screw on the oscillator 600 K.C. tracking condenser. Rock the gang condenser back and forth across the signal at the same time, and listen closely until the maximum volume is obtained. The tracking condenser is then properly adjusted and remains fixed thereafter.

The gang condenser trimmers only must then be adjusted again at 1,400 K.C. for maximum output.

The receiver should be accurately aligned if the above instructions have been followed and no further adjustments need be made.

The blue lead on the filter block is common for condensers C4, C5, and C18, and the black lead is common for condensers C3, C15, C16, and C17. The second detector plate filter choke is also contained in the block and is connected by two yellow leads, C8, (white-red leads) and C10 (red leads) are connected as shown in Fig. 1 schematic wiring diagram.

Voltages at Sockets

The voltages shown in the chart were taken with a 1,000 ohm per volt voltmeter; voltage measurements taken with a voltmeter having a different resistance will, of course, differ from those shown.

Turn the volume control all the way on, connect the antenna and ground leads together and turn the gang condenser plates all the way out. Check the line voltage.

Tube	Circuit	LINE VOLTAGE				
		90 V.	100 V.	110 V.	120 V.	130 V.
R. F. '35	Screen-Grid	70	78	85	92	100
	Plate	143	159	175	191	207
1st Det. '35	Screen-Grid	70	78	85	92	100
	Plate	143	159	175	191	207
I. F. '35	Screen-Grid	70	78	85	92	100
	Plate	143	159	175	191	207
Oscillator '27	Plate	70	78	85	92	100
2nd Det. '24	Screen-Grid	66	73	80	87	94
	Plate	127	134	141	148	155
A. V. C. '24	Grid	14	15.5	17	18.5	20
	Screen-Grid	24	26	28	30	32
Audio '47	Accelerating-Grid	199	221	244	267	289
	Plate	171	190	210	230	250
Rectifier '80	Current (both plates)	67 MA	75 MA	82 MA	89 MA	96 MA
	Plate to Plate Volt.	512	569	625	682	739

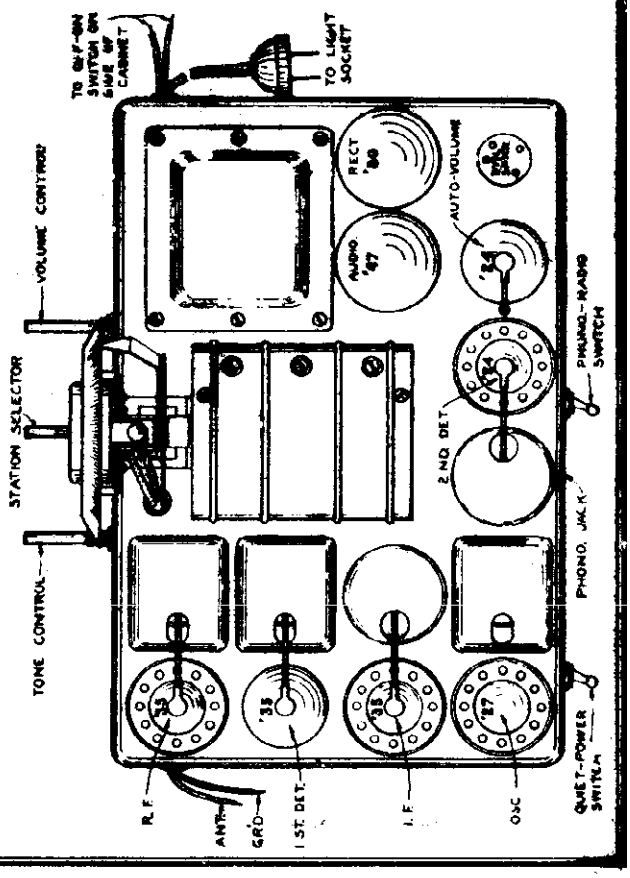

©John F. Rider, Publisher

MODEL S-719
Schematic, Socket Trimmers, Voltage

WESTERN AUTO SUPPLY CO.

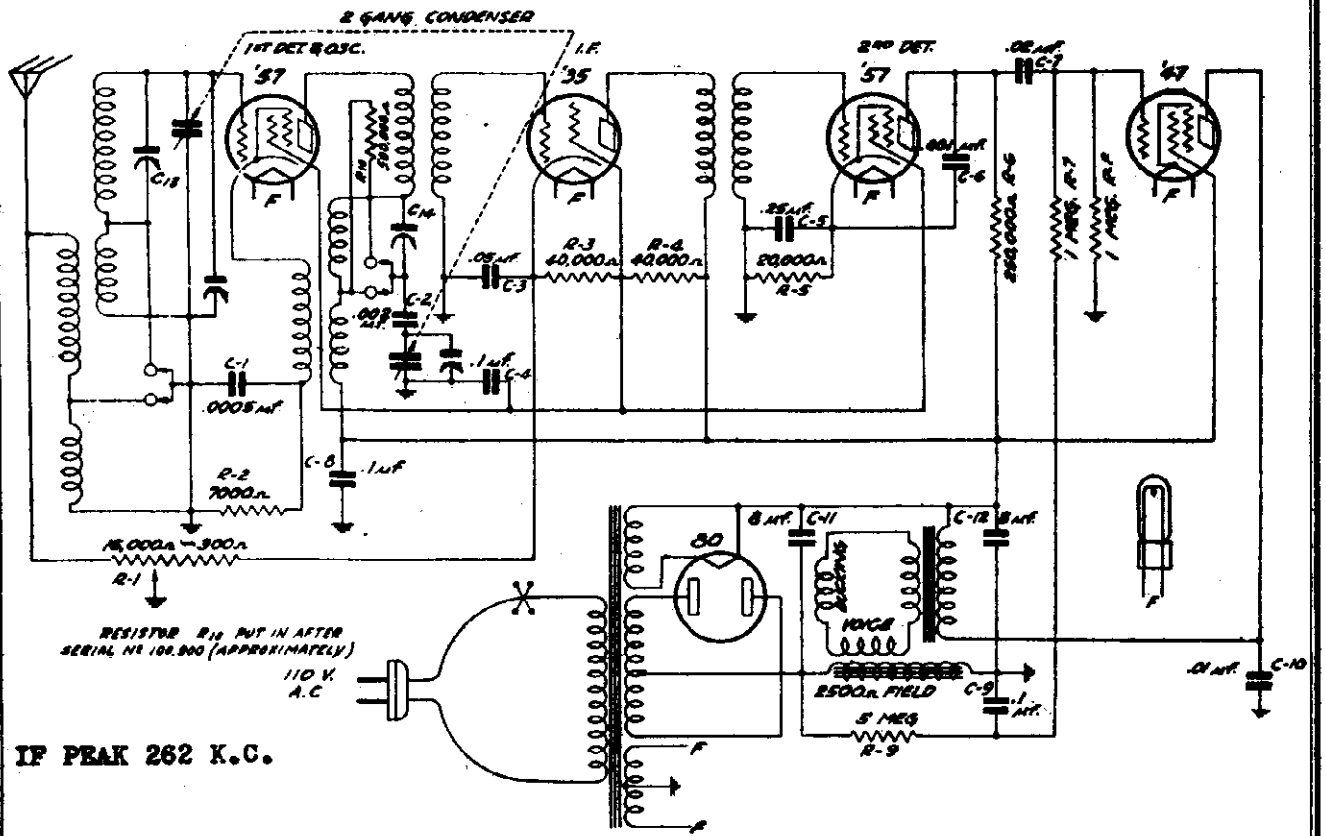

IF PEAK 262 K.C.

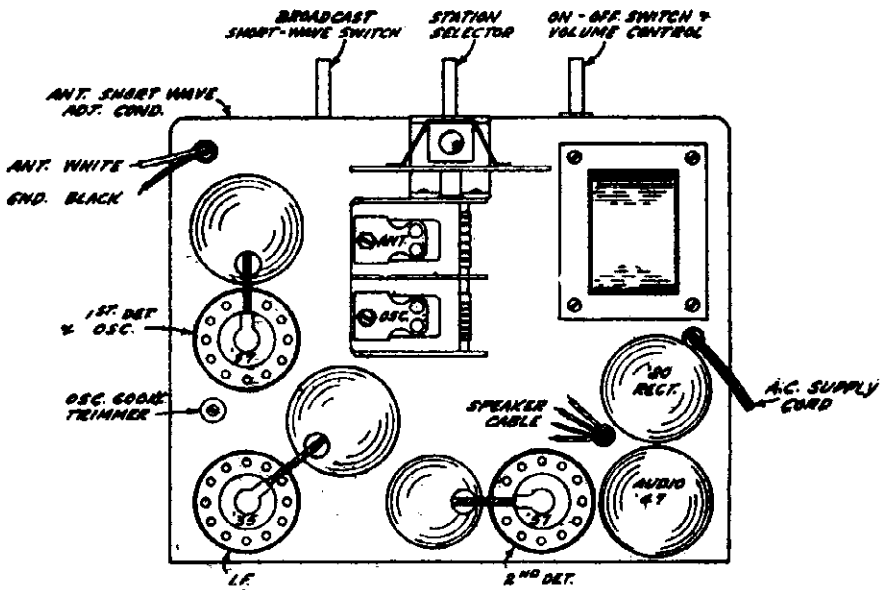

Tube	Fil.	Plate to Cathode	Screen to Cathode	Grid to Cathode	Plate Cnnt.
1st Det	2.15	225	90	4.	.5
IF Amp	2.15	230	90	3.2*	6.2
2nd Det	2.15	170	90	4.3	.2
Audio	2.15	225	240	14.**	23.
Rect.	4.75	620 volts AC from plate to plate			

* When read with cord and plug, ground the control grid.
** High resistance interferes with correct reading.

©John F. Rider, Publisher

WESTERN AUTO SUPPLY CO.

MODELS S-725, S-726
Schematic, Socket
Trimmers, Alignment

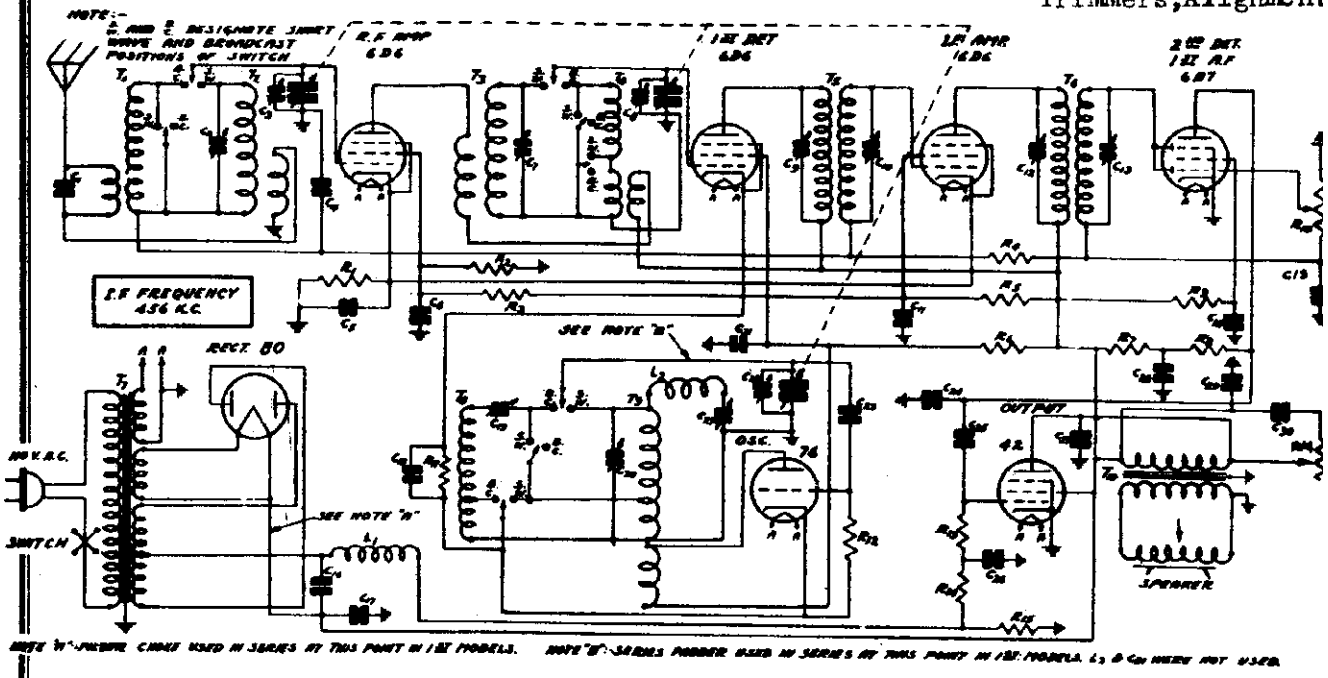

Fig. 1—Schematic Circuit Diagram

Condenser Alignment

Correct alignment is extremely important in connection with all wave receivers. The receivers are all properly aligned at the factory with precision instruments and re-alignment should not be attempted unless all other possible causes of the faulty operation have first been investigated and unless the service technician has the proper equipment. A signal generator that will provide an accurately calibrated signal of 456 K. C. and accurately calibrated signals over the broadcast and short wave bands, 530-1740 K. C. and 5.8-18.3 M. C., is required. An output indicating meter is also necessary. It will be practically impossible to align the receiver if unsatisfactory apparatus is used.

Use a non-metallic screw driver for the adjustments. The complete procedure is as follows:

Intermediate Frequency Adjustment

Set the signal generator for 456 K. C. Connect the antenna lead of the signal generator to the grid of the 1st detector through a .05 mfd. condenser. Turn the tuning condenser rotor until the plates are completely out. The ground lead from the signal generator goes to the ground lead of the receiver. The volume control should be at the maximum position. Attenuate the signal so that A. V. C. action is not obtained.

Then adjust the four I. F. trimmer condensers until maximum output is obtained. The adjusting screws for these condensers are reached from the top of the chassis and are in the round I. F. cans—See Fig. 2. The openings to the trimmer condensers are covered over by a small cover plate which is held in position by a screw. Loosen these screws until the cover plates can be swung around.

Broadcast Band Adjustment

The broadcast short wave switch should be in the broadcast position. Set the signal generator for 1740 K. C. Turn the rotor to the full open position. The antenna lead from the signal generator is in this instance connected to the antenna lead of the receiver. Attenuate the signal so that A. V. C. action is not obtained. Adjust the oscillator broadcast trimmer until maximum output is obtained. This trimmer is on the tuning condenser and its location is shown in Fig. 2.

Then set the signal generator for 1500 K. C. Turn the rotor until maximum output is obtained. Loosen the pointer screw and set the pointer at the 1500 K. C. mark on broadcast band scale. Retighten pointer screw. Then adjust the antenna and 1st detector broadcast trimmers until maximum output is obtained.

Next set the signal generator for 600 K. C. and adjust the 600 K. C. trimmer. The adjusting screw is reached through a hole in the front panel of the chassis as shown in Fig. 2. Turn the tuning condenser rotor until maximum output is obtained. Then turn the rotor slowly back and forth over

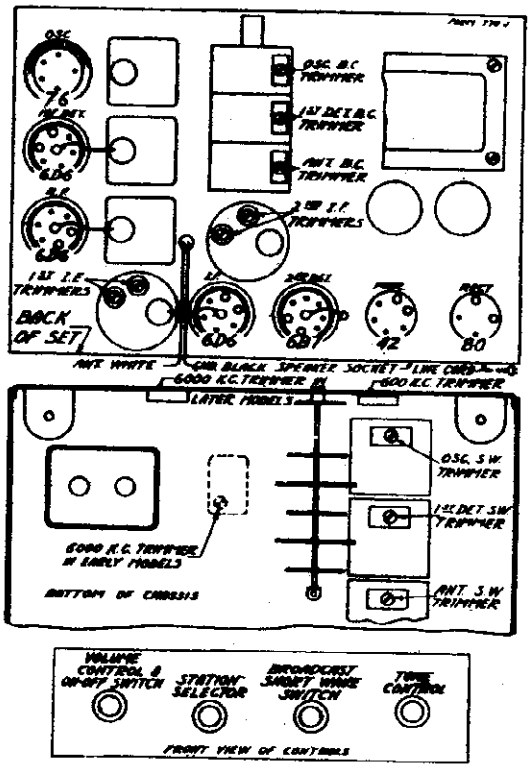

Fig. 2—Tube Arrangement and Location of Trimmers

©John F. Rider, Publisher

this setting at the same time adjusting the 600 K. C. trimmer screw until the highest output is obtained.

Short Wave Band Adjustment

CAUTION—After the broadcast band alignment as described above has been made, do not change the adjustment of any of the broadcast band trimmers.

Turn the broadcast short wave switch to the short wave position. Turn the rotor to the full open position. As explained above, the volume control should be at the maximum position and the signal should be attenuated to prevent A. V. C action. Set the signal generator for 18,300 K. C. Then adjust the oscillator short wave trimmer for maximum output. This trimmer is reached from under the chassis and its position is shown in Fig. 2.

Next set the signal generator for 15,000 K. C. Turn the rotor until the dial pointer is at the 15,000 K. C. mark on the short wave portion of the dial scale. Then adjust the antenna and 1st detector short wave trimmers until maximum output is obtained.

In aligning the short wave band of the receiver, it will be noted that the signal will be heard with the signal generator set at two points 912 K. C. apart. That is, if the receiver is tuned to 15,000 K. C. a signal will be heard when the signal generator is set at 15,000 K. C. and again at approximately 15,912 K. C. This is due to image reception or the fact that a 456 K. C. beat is obtained when the signal is 456 K. C. lower than the receiver oscillator and also when the signal is 456 K. C. higher than the receiver oscillator. Care should be taken to see that the receiver is tracked with the signal generator adjusted to the lower of the two frequencies at which a signal is heard, in order that the oscillator in the receiver will be 456 K.C. higher in frequency than the signal.

Next set the signal generator for 6000 K. C. and adjust the 6000 K. C. trimmer. In the first models of this receiver, this condenser was located at the point shown in Fig. 2 in dashed lines. In the later models it is reached through a hole in the front panel of the chassis as shown in the same illustration. Turn the tuning condenser rotor until maximum output is obtained. Then turn the rotor slowly back and forth over this setting, at the same time adjusting the 6000 K. C. trimmer screw until the highest output is obtained. In the early models this adjustment is broad while in the later models it is more critical.

Caution

The can of electrolytic condenser C16 is not at ground potential. Therefore in any work on the chassis, care should be taken not to touch this can and any other grounded point such as the other electrolytic condenser can.

Replacing Drive Cord

Remove chassis from cabinet.

Take off the pilot light assembly by lifting off the two sockets and spring clips.

Detach the large pointer by removing the screw at the center of the dial.

Loosen the dial assembly by taking out the two screws which secure the bottom of this assembly to the chassis.

Then lay the complete dial assembly face downward in front of the chassis. It is not necessary to remove the volume control and tone control collars which hold the indicator cords of these two controls in position.

Turn the drive drum until the opening in this drum is approximately vertical and with this hole at the top as shown in Fig. 3.

Remove the tension spring and the old drive cord.

See that the eyelet is in the hole in the drive drum as shown in Fig. 3. Insert one end of the drive cord from the outside through the hole in the eyelet in the drive drum.

Voltages at Sockets

LINE VOLTAGE — 115
ANTENNA SHORTED TO GROUND

Type of Tube	Function	Across Fils. or Heater	Plate to Cath.	Screen to Cath.	Control Grid to Cath.	Normal Plate M. A.
6D6	R. F.	6.3	246	100	3.6(1)	5.3
6D6	1st Det.	6.3	237	97	8.0(2)	3.4
76	Osc.	6.3	115		0	4.8
6D6	I. F.	6.3	246	130	3.6(1)	8.3
6B7	2nd Det.	6.3	50(3)	40(3)	0	2.7
42	Power	6.3	230	245	17.0(4)	33.0
80	Rectifier	5.0				37.0 per plate

(1) Cathode to ground
(2) Subject to variation
(3) Read with 1,000,000 ohm meter
(4) As read across R15

Tie the end of the cord which has been inserted in the hole to one end of the tension spring.

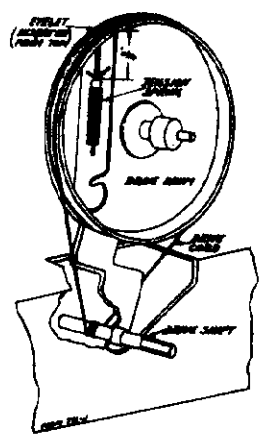

Fig. 3—Drive Cord Replacement

Wrap the cord in a clockwise direction (facing front of chassis) around the drive drum approximately one-half turn.

Then tilt the chassis up on its back panel and bring the cord mentioned in the previous paragraph down to the drive shaft. Wrap it two and one-half times around the drive shaft as shown in Fig. 3.

Then bring this cord up from the drive shaft and wrap it around the drive drum approximately one and one fifth turns in a clockwise direction until it is up to the hole in this drum as illustrated.

Insert the free end of the cord through the hole in the eyelet and tie it to the end of the tension spring. The end of the spring, when hanging free, should be approximately ¾" from the flange of the drum as shown in Fig. 3. Cut off the surplus length of cord after it is knotted.

Then secure the other end of the tension spring over the spur on the drive drum.

Replace the dial assembly and pointer.

Replace the pilot light assembly after which the chassis may be reinstalled in the cabinet.

Changes in Early Models

There are two points at which the early models of this receiver differ from the present models. These points are indicated in Fig. 1 and described below.

Power Unit

In the early models a separate filter choke was used in series at the point indicated in note A in Fig. 1. The values of the two filter condensers C16 and C17 were less than as used at present. The values of the old and new condensers are shown in the parts list. A different power transformer was also used with the early filter system and this is likewise shown in the parts list.

The two power transformers are not interchangeable and care must be taken in ordering for replacement purposes to order the correct one. The original chassis can be identified by the separate filter choke.

Short Wave Oscillator

Referring to Fig. 1 it will be noted that there is a tracking coil L2 and a trimmer condenser C21 connected in series between the short wave oscillator coil and ground. In the first models of this receiver these two units, which are required for tracking the short wave oscillator, are not used. Instead a series padding condenser was used at the point in the circuit indicated by note B in Fig. 1.

At the time this change was made a change was also made in the oscillator assembly and care must be taken in ordering for replacement purposes to order the correct one. Early models with the original oscillator assembly have no spot of paint or a green spot of paint on the 80 socket rivet. Later models with the new oscillator assembly and new tracking system have a red spot of paint on the 80 socket rivet.

Twenty-five Cycle Receivers

The twenty-five cycle receiver differs from the sixty-cycle, receiver, only in the fact that a different power transformer is used. The correct power transformer is shown in the parts list.

The twenty-five cycle chassis can be operated satisfactorily from a sixty-cycle power supply. However, the reverse is not true, the sixty-cycle receiver cannot be operated from a twenty-five cycle power supply.

A 110-220 Volt, 40-60 cycle Power Transformer is also available for this model.

REPAIR PARTS LIST FOR 7 TUBE BROADCAST AND SHORT WAVE RECEIVER

When ordering parts be sure and give the part number. Also give the series number which will be found in the License Notice label. If there is a spot of paint on the chassis, give this color.

Part No.	Item	List Price
P-1441	Double Mounting Strip	.20
P-1442	Single Mounting Strip	.20
P-2068	Knob Small	.20
P-2063	Knob Large	.20
P-2067	Small Tone & Volume Control Disc	.10
P-2062	Pointer, Large	.20
P-2061	Pilot Light Bulb 6-8 volt	.10
P-2072	Rubber Mounting Foot	.10
P-2070	Glass Crystal	.15
P-2075	Crystal Retainer Ring	.10
P-2080	6" Speaker Mounted Less Li. - 1250 ohm	5.50
P-2084	6" Speaker Complete Less Li. - 1250 ohm	6.25
	8' Black Drive Cord (V. C. or T. C. Ind.)	.10
	20" Black Drive Cord (Cond. Drive)	.10
P-2130	Pilot Lamp Socket & Clip Assembly	.10
P-2131	Broadcast-Short Wave Switch	1.20

Part No.	Item	List Price
P-1001	No. 6D6 Socket	$ .15
P-1002	No. 76 Socket	.15
P-1004	No. 6B7 Socket	.15
P-1005	No. 42 Socket	.15
P-1025	No. 80 Socket	.15
P-1451	Speaker Socket	.15
P-40445	Tube Shield for 6D6 & 6B7 Tubes	.15
P-40444	Tube Shield for 76 Tube	.15
P-40443	Tube Shield Bases	.15
*P-2064	Power Transformer 115 Volts, 60 Cycles	1.50
*P-2065	Power Transformer 115 Volts 25 Cycles	1.50
*P-2026	Power Transformer 115-230 Volts, 40-60 Cycles	1.75
†P-2066	Power Transformer 115 Volts, 60 Cycles	1.50
†P-2067	Power Transformer 115 Volts, 25 Cycles	1.50
†P-2068	Power Transformer 115-230 Volts, 40-60 Cycles	1.75
*P-2027	Filter Reactor	.75
P-2029 A	Output Transformer T 10	1.15
P-2174	Antenna R.F. Trans. less can T1 & T2	1.50
P-2175	Inter-Stage R. F. Trans. less can T3 & T4	1.75
*P-2178	Oscillator Coil Assembly Less can T5 & T6	1.50
†P-2180	Oscillator Coil Assembly Less can T5 & T6	1.50
P-40450	Cans for the above Assemblies	.15
†P-2189	High Frequency Oscillator Tracking Coil L2	.35
P-2179	1st I. F. Assembly Complete with Can T3	2.15
P-2180	2nd I. F. Assembly Complete with Can T4	1.75
P-2024S-A	Grid Cap Only	.10
P-2078S	AC Cord & Plug	.35
P-1304	3 Terminal Mounting Strip	.10

Part No.	Code	Resistance	Watts	Type	List Price
P-40006	R1	800 ohms	.2	Flat Wire Wound	$ .15
*P-1000-8	R2	30,000 ohms	.5	Carbon	.20
P-1004-8	R3	6,000 ohms	.5	Carbon	.15
P-A40005	R4	2.0 megohms	.2	Carbon	.15
P-2020	{R5	16,000 ohms	1.5}	Armored	.45
	{R6	25,000 ohms	1.0}	wire wound	
P-A40003	R7	20,000 ohms	.2	Carbon	.15
P-1004-8	R8	60,000 ohms	.5	Carbon	.15
P-1004-8	R9	300,000 ohms	.5	Carbon	.20
P-40004	R10	500,000 ohms		Vol. Control & Switch	1.05
P-A40002	R11	2,000 ohms	.2	Carbon	.15
P-A40004	R12	100,000 ohms	.2	Carbon	.15
P-A40004	R13	100,000 ohms	.2	Carbon	.20
P-A40004	R14	100,000 ohms	.2	Carbon	.15
P-40005	R15	285 ohms	2.0	Flat Wire Wound	.15
P-97011	R16	150,000 ohms		Tone Control	.75

Part No.	Code	Capacity	Volts	Type	List Price
P-1009	C1	.00005 mfd.		Moulded	$ .20
P-2102	C2	3-40 mmfd.		Ant. S.W. Trimmer	.15
	C3	(See 3 Gang Cond.)		Gang Trimmer	
P-40002	C4	.05 mfd.	200V.	Tubular	.15
P-40008	C5	.25 mfd.	200V.	Tubular	.25
P-40010	C6	.05 mfd.	400V.	Tubular	.20
P-2102	C7	3-40 mmfd.		1st Det.S.W. Trim	.15
	C8	(See 3 Gang Cond.)		Gang Trimmer	
P-1386-B	{C9	90-230 mmfd.		Dual Trimmer	
	{C10	90-230 mmfd.		Part of I. F. Assem.	
P-40004	C11	.25 mfd.	200V.	Tubular	.20
P-1386-B	{C12	90-230 mmfd.		Dual Trimmer	
	{C13	90-230 mmfd.		Part of I. F. Assem.	
P-40009	C14	.25 mfd.	400V.	Tubular	.25
P-40007	C15	.0001 mfd.		Moulded	.20
†P-81043	C16	10.0 mfd.	200V.	Electrolytic Wet	1.20
*P-80916	C16	8.0 mfd.	450V.	Electrolytic Wet	1.35
*P-81032	C17	8.0 mfd.	200V.	Electrolytic Wet	1.20
†P-81042	C17	14.0 mfd.	450V.	Electrolytic Wet	1.45
P-40002	C18	.05 mfd.	200V.	Tubular	.15
P-2112	C19	200-300 mmfd.		600 K.C. Trimmer	.45
P-2102	C20	3-40 mmfd.		Osc. S.W. Trimmer	.15
†P-1405	C21	70-130 mmfd.		6000 K.C. Trimmer	.35
	C22	(See 3 Gang Cond.)		Gang Trimmer	
P-40005	C23	.000025 mfd.		Moulded	.15
P-40004	C24	.002 mfd.	400V.	Tubular	.20
P-40001	C25	.01 mfd.	400V.	Tubular	.20
P-40004	C26	.05 mfd.	400V.	Tubular	.15
P-40004	C27	.002 mfd.	400V.	Tubular	.20
P-40003	C28	.25 mfd.	400V.	Tubular	.25
P-40007	C29	.1 mfd.	400V.	Tubular	.20
P-40009	C30	.05 mfd.	400V.	Tubular	.20
P-40007	C31	.1 mfd.	400V.	Tubular	.20
P-2105F-B	3 Gang Condenser				1.35
*P-2113	600-1200 mmfd.			6000 K.C. Trimmer	.60

* Used in early Models. See Article on changes in this Manual
† Used in Later Models. See Article on changes in this Manual

©John F. Rider, Publisher

©John F. Rider, Publisher

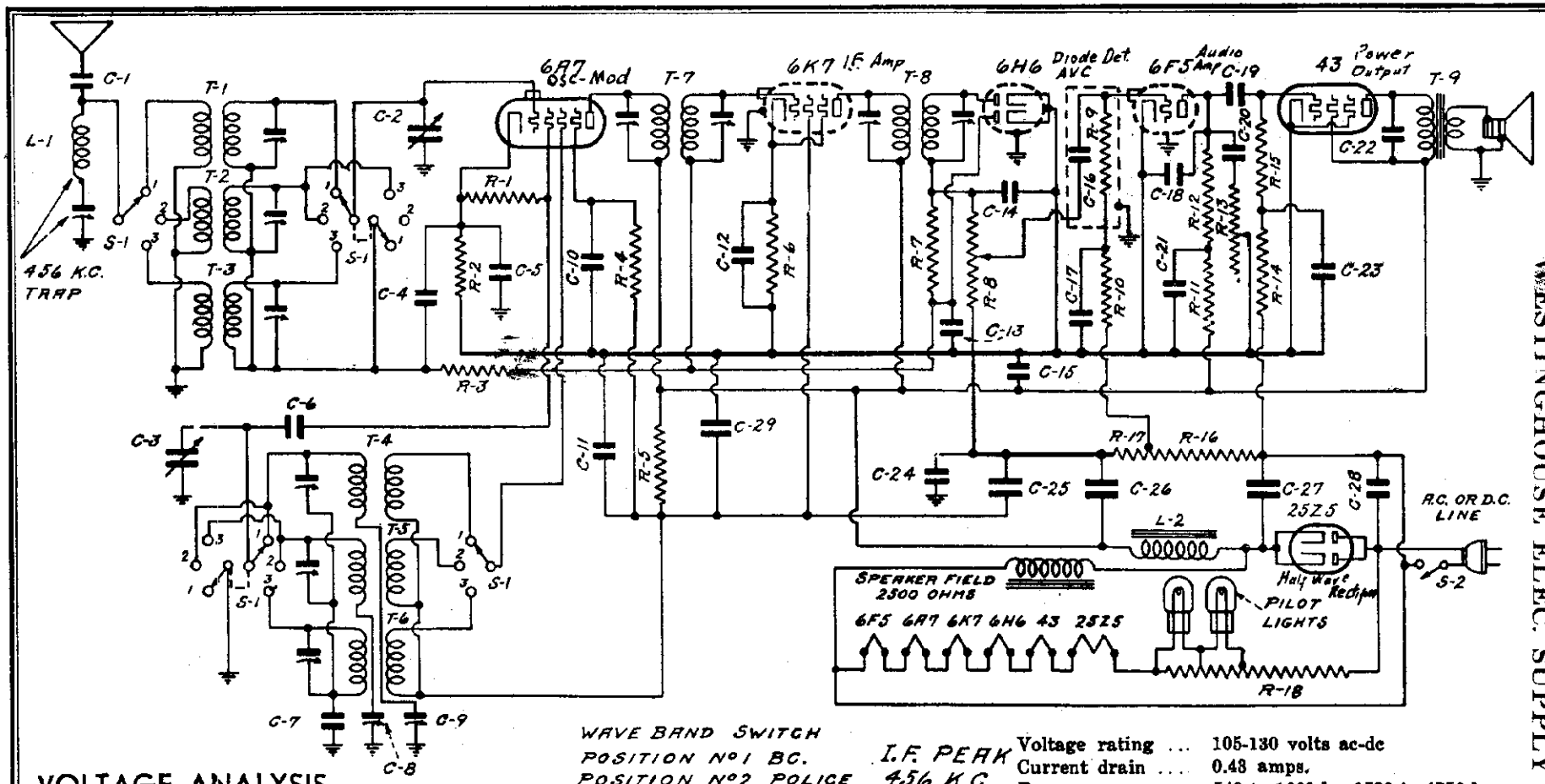

WAVE BAND SWITCH
POSITION N°1 BC.
POSITION N°2 POLICE
POSITION N°3 S.W.

I.F. PEAK 456 K.C.

Voltage rating ... 105-130 volts ac-dc
Current drain ... 0.48 amps.
Frequency ranges 540 to 1660 kc, 1580 to 4750 kc, 5.5 to 16 mc.

VOLTAGE ANALYSIS

Readings should be taken with a 1000 ohms-per-volt meter. Voltages listed below are from point indicated to the cathode of the 43 tube (B minus). Line voltage for these readings was 117.5 volts, 60 cycles, a.c.

Tube	*Plate*	*Screen*	*Cathode*	*Osc. Plate*	*Fil.*
6A7	99	43	1.1	80	6.3
6K7	99	80	1.8	—	6.3
6H6	—	—	0	—	6.3
6F5	50	—	0	—	6.3
43	87	99	0	—	24

Voltage across speaker field (black and yellow leads)—120
Voltage across filter choke—9.5

The 250 ohm bias resistor, R16 and R17 on schematic diagram, is located underneath the chassis deck near the volume control.

Voltage across the two outside terminals of this resistor—11.5
Voltage from cathode of 43 tube to central terminal of resistor—1.0

Fil. drop.res. 2LR-212 is a cyl. plug-in type and is located at chassis top bet. 6H6 & 25Z5 tubes. O.P. Transf. 2LT-221 (T9 on schematic) and filter choke 2CT-207A (L2 on schematic) are located in square can on chassis top to left of speaker.

MODEL WR-101
Chassis U6F
Alignment,Parts

WESTINGHOUSE ELEC. SUPPLY CO.

ADJUSTMENTS

An oscillator with frequencies of 456, 600, 1600, 1700, 4500 and 15,000 kc should be used. In addition, an output meter should be used across the voice coil or output transformer for observing maximum response.

I-f and Wave-trap Alignment

The i-f transformers are located on the top of the chassis. The four trimmers, two for each i-f transformer, are located at the tops of the cans. Set the wave-band switch to broadcast (extreme clockwise position) and rotate variable condenser to minimum capacity. Feed 456 kc to grid of the 6A8 tube and adjust the four i-f trimmers for maximum response. Then feed 456 kc through the antenna and adjust the wave-trap trimmer for *minimum response*. The trimmer is on the wave-trap, which is located on top of the chassis behind the speaker. This reduces telegraphic code interference.

Location of Coils

The antenna coils for the three bands are wound on one form and mounted on the top of the chassis to the right of the speaker. The three trimmers for these coils are mounted on the bakelite strip fastened to the coil form. The upper trimmer is for the short-wave coil, the central trimmer for the police coil and the lower trimmer for the broadcast coil.

The oscillator coils for the three bands are wound on one form and mounted underneath the chassis deck on the right-hand wall with the trimmers facing out. The trimmer screws are available through three holes in the chassis wall. The trimmer closest to front is for the broadcast oscillator coil, the central trimmer is for the police oscillator coil and the trimmer furthest from front is for the short-wave oscillator coil.

The adjusting screws for the dual padder are also available at the right-hand chassis wall. The screw closer to the front is for the broadcast band and the other is for the police band. The short-wave band has no adjustable padder.

Broadcast Alignment

Set the wave-band switch to broadcast position (extreme clockwise) and dial pointer to 600. Feed 600 kc through antenna lead and adjust broadcast padder (lower row on right wall, closest to front) for maximum response. Set pointer to 1600, feed 1600 kc and adjust the broadcast oscillator trimmer (top row on right wall, closest to front) for maximum response, and then the broadcast antenna trimmer (on antenna coil, lower trimmer). Return pointer to 600 and rock the variable condenser (rotate condenser back and forth through small arc) while adjusting the broadcast padder for maximum response. If a readjustment is necessary return to 1600 and realign the antenna and oscillator trimmers.

Police Alignment

Set the wave-band switch to police (central position), pointer to 1700 and feed 1700 kc through antenna lead. Adjust police band padder (furthest from front on right wall, lower row) for maximum response. Set pointer to 4500 and feed 4500 kc. Adjust police band oscillator trimmer (central trimmer on right wall, upper row) for maximum response. If two peaks are heard, select the one of minimum capacity (see General Instructions below). Then adjust police band antenna trimmer (central one on top) for maximum response, selecting the peak of maximum capacity. Again feed 1700 kc, with pointer at 1700, rock variable condenser and adjust police band padder for maximum response. Realign at 4500 if necessary.

Short-wave Alignment

Set wave-band switch to short-wave (counter-clockwise) position and pointer at 15 megacycles. Feed 15,000 kc through antenna. Adjust short-wave oscillator trimmer (furthest from front on right wall, top row) for maximum response. If two peaks are obtained, select the one of minimum capacity. Adjust the short-wave antenna trimmer (upper trimmer on antenna coil) for maximum response while rocking the variable condenser.

Check all three bands for dead spots or incorrect image responses.

General Instructions

The set's oscillator is higher in frequency than the signal on all three bands. Images, therefore, should be observed on the low-frequency side of the signals.

Always choose the minimum capacity peak on oscillator trimmers and maximum capacity peak on the antenna trimmers. The last motion in adjusting trimmers should always be a tightening one.

Never leave a trimmer with the outside plate so loose that there is no tension on the screw. Either bend the plate up or remove the screw entirely. Loose screws are a source of noise, frequency drift and microphonism.

In aligning antenna trimmers on the high-frequency signals there is usually a tendency for the oscillator to drift, due to interlocking. To compensate for this, always keep re-tuning the variable condenser.

REPLACEMENT PARTS LIST

Item	Part No.	DESCRIPTION	Price
L1	MMT-149	456 kc adjustable wave trap	$ .35
L2	2CT-207A	Filter choke—200 ohms	.60
T1, T2, T3	2LT-219	Three-band antenna coil	1.80
T4, T5, T6	2LT-220	Three-band oscillator coil	1.80
T7	2LT-224	456 kc first i-f transformer	1.15
T8	2LT-225	456 kc second i-f transformer	1.15
T9	2LT-221	Speaker output transformer	1.00
R1	KR-53	50,000 ohm ¼ watt carbon resistor	.16
R2, R6	CCR-140	350 ohm ½ watt wire-wound resistor	.16
R3	KR-55	250,000 ohm ¼ watt carbon resistor	.16
R4	ZZR-196	30,000 ohm ¼ watt carbon resistor	.16
R5	LR-64	5,000 ohm ¼ watt carbon resistor	.16
R7	KR-57	1 megohm ¼ watt carbon resistor	.16
R8, S2	ZZR-180A	Volume control with line switch—0.5 megohm	.75
R9, R10, R15	KR-56	0.5 megohm ¼ watt carbon resistor	.16
R11	KR-54	100,000 ohm ¼ watt carbon resistor	.16
R12	LR-61	200,000 ohm ¼ watt carbon resistor	.16
R13	ZZR-191A	Tone control—250,000 ohms	.35
R14	OR-73	25,000 ohm ¼ watt carbon resistor	.16
R16, R17	2CR-211	250 ohm, one watt, wire-wound tapped resistor R16—220 ohms R17—30 ohms	.25
R18	2LR-212	Plug-in type ballast resistor	.85
C1, C22	AAC-114	0.001 mf mica condenser	.16
C2, C3	ZZG-134	Two-gang variable condenser	1.80
C4, C5	2LC-225	0.05 mf, 200 volt tubular high-frequency condenser	.16
C6	EC-24A	0.0001 mf mica condenser	.16
C7	ZZC-206	0.005 mf mica condenser	.16
C8, C9	JJC-144C	Dual adjustable padding condenser C8—800 to 1400 mmf C9—250 to 550 mmf	.60
C10, C11, C12	2LC-223	Six-section condenser block C10—0.1 mf, 200 v. C11—0.1 mf, 200 v. C12—0.1 mf, 200 v. C18—0.05 mf, 200 v. C15—0.1 mf, 200 v. C24—0.2 mf, 200 v.	1.10
C13, C15, C24			
C14, C18	AC-7A	0.00025 mf mica condenser	.16
C16, C19	CCC-127A	0.01 mf, 200 volt tubular condenser	.16
C17, C21, C23	AC-6	0.1 mf, 200 volt tubular condenser	.16
C20	HC-34	0.006 mf, 600 volt tubular condenser	.16
C25, C26, C27	2LC-224	Multiple 4, 8 and 16 mf electrolytic condenser C25—4 mf, 150 volts C26—8 mf, 150 volts C27—16 mf, 150 volts	2.10
C28	LC-64	0.05 mf, 400 volt tubular condenser	.16
C29	YC-98A	Tubular 4 mf, 150 volt electrolytic condenser	.70
	2LS-142	Dynamic speaker (without output transformer)	8.75
S1	ZZS-129A	Wave-band switch	1.05
	XL-9	Pilot light, 6.8 volts, .26 amp. Mazda No. 46	.15
	ZZD-23A	Airplane dial	1.85
	ZZZ-209	Escutcheon	.20

PRICES ARE SUBJECT TO CHANGE WITHOUT NOTICE

©John F. Rider, Publisher

WESTINGHOUSE ELEC. SUPPLY CO.

MODEL WR-208
Schematic
Voltage, Color Coding

The color coding of the i-f transformers is as follows:

Grid—green
B plus—red
Grid return—black
Plate—blue

The color coding of the power transformer is as follows:

Primary—two black leads
High-voltage secondary—two red leads
High-voltage secondary center tap—red and yellow lead
6.3 volt secondary—two green leads
5 volt secondary—two yellow leads.

With a few exceptions, the color coding of the general wiring is as follows:

Plate—blue
B plus—red
Screen—brown
Cathode—white or yellow
Grid—green
Fil. and ground—black.

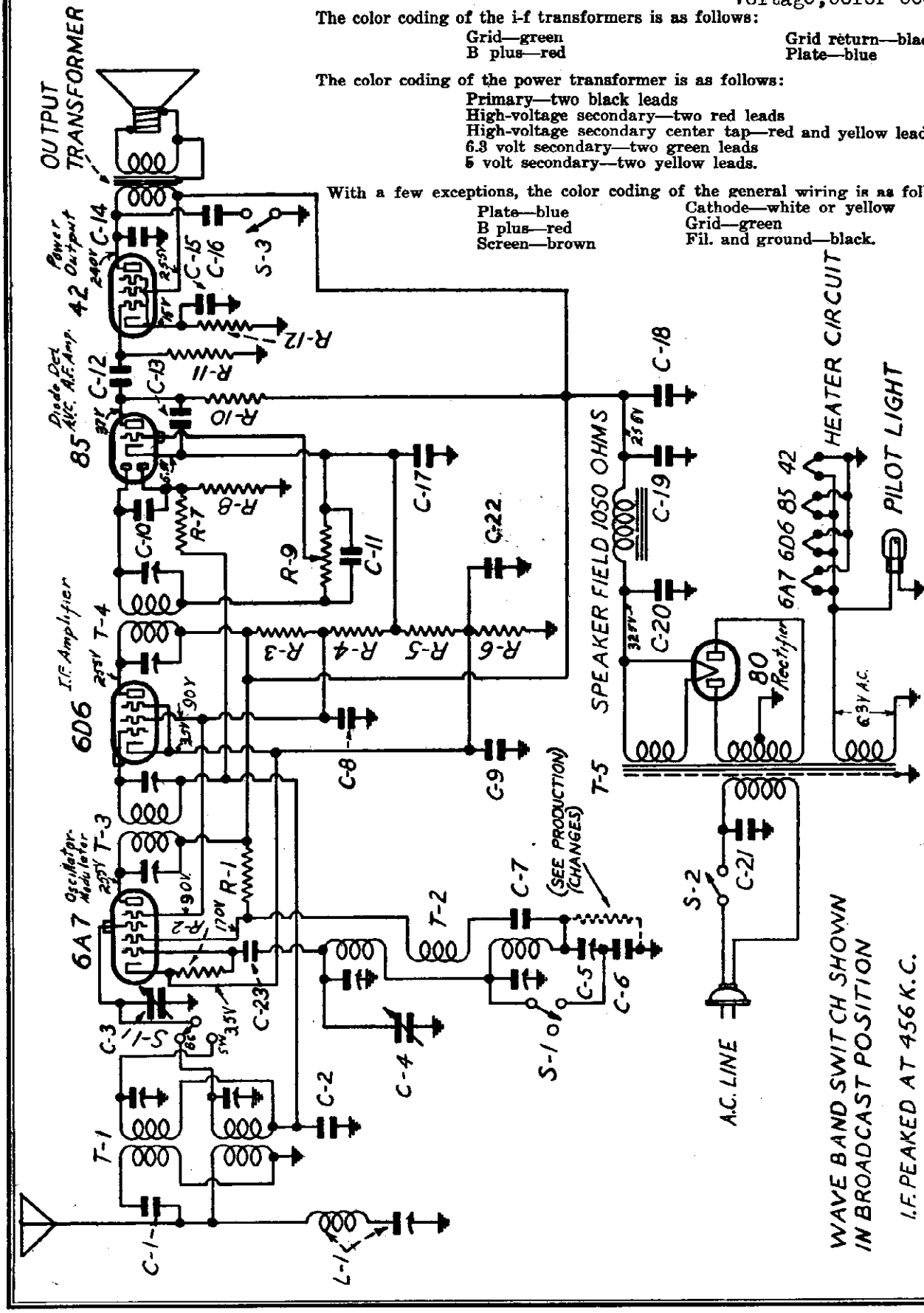

The receiver should never be turned on with either the speaker plug or the 42 tube out of its respective socket, since the rapid rise in rectifier voltage will damage the electrolytic condenser.

©John F. Rider, Publisher

MODEL WR-208
Alignment, Changes
Parts

WESTINGHOUSE ELEC. SUPPLY CO.

REPLACEMENT PARTS

*Item	Part No.	DESCRIPTION	List Price Effective as of Sept. 1st, 1935 PRICE
L1	MMT-149	456 kc adjustable wave trap	$ .85
T1	2NT-226	Two-band antenna coil	1.10
T2	2NT-227	Two-band oscillator coil	.90
T3	2NT-230	456 kc first i-f transformer	.90
T4	2NT-231	456 kc second i-f transformer	.90
T5	2NT-233	Power transformer	2.70
R1	LR-60	20,000 ohm ¼ watt carbon resistor	.16
R2	KR-53	50,000 ohm ¼ watt carbon resistor	.16
R3	BR-12	25,000 ohm 1 watt carbon resistor	.16
R4	2NR-217	40,000 ohm 1 watt carbon resistor	.16
R5	FFR-126	500 ohm ½ watt wire-wound resistor	.16
R6	IIR-180	150 ohm ½ watt wire-wound resistor	.16
R7, R8	KR-57	1 megohm ¼ watt carbon resistor	.16
R9, S2	2NR-214	Volume control with line switch—250,000 ohms	.80
R10	KR-54	100,000 ohm ¼ watt carbon resistor	.16
R11	KR-56	500,000 ohm ¼ watt carbon resistor	.16
R12	CCR-118	450 ohm 1 watt wire-wound resistor	.16
C1, C23	AAC-106A	0.00005 mf mica condenser	.15
C2, C3	BC-12	0.05 mf, 200 volt tubular condenser	.15
C3, C4	2NC-228	Two gang variable condenser	2.00
C5	2NC-231	Single adjustable padding condenser Range—300 to 600 mmf	.85
C6	2NC-230	0.00135 mf mica condenser	.20
C7	KC-53	0.01 mf, 400 volt tubular condenser	.16
C9	BC-13	0.25 mf, 200 volt tubular condenser	.16
C10, C11, C22	AC-7A	0.00025 mf mica condenser	.16
C12	LC-65	0.02 mf, 400 volt tubular condenser	.16
C13	IC-47	0.0005 mf mica condenser	.16
C14	ZC-115	0.006 mf, 1000 volt tubular condenser	.16
C15	IC-48A	Tubular 5 mf, 25 volt dry electrolytic condenser	.80
C16	2TC-189	0.015 mf, 1000 volt tubular condenser	.16
C17	AC-6	0.1 mf, 200 volt tubular condenser	.16
C18	EEC-132	0.1 mf, 400 volt tubular condenser	.16
C19	2NC-247	16 mf, 405 volt wet electrolytic condenser (regulating type)	.80
C20	2NC-246	16 mf, 450 volt wet electrolytic condenser	.80
C21	2NC-250	0.01 mf, 250 volt a-c condenser in tubular metal container	.20
	2NS-122	6½" dynamic speaker	2.75
S1	TTS-111E	Wave-band switch	.40
S3	2TS-145B	Tone control switch	.25
	XL-9	Pilot light, 6.3 volt, .25 amp. Mazda No. 46	.15
	2ND-34B	Airplane dial	1.30
	2NZ-806	Escutcheon with crystal	.50
	2TM-211	Escutcheon reflector ring	.10

PRICES ARE SUBJECT TO CHANGE WITHOUT NOTICE

PRODUCTION CHANGES

In early production:

a. Airplane dial was part number 2ND-34 and had a grey dial face. Later dial, part number 2ND-34B, has a black dial face.

b. C19 and C20 were each 12 mf, 450 volt electrolytics.

c. R2 was originally in position indicated by dotted lines. It was later placed across the oscillator grid and cathode of the 6A7 tube (as now shown in the schematic) and at the same time C22 was added and C23 omitted.

ADJUSTMENTS

An oscillator with frequencies of 456, 600, 1600 and 6000 kc should be used.
An output meter should be used across the voice coil or output transformer for observing maximum response.
If the circuit is at all disturbed, both the broadcast and short-wave bands must be realigned.

Location of Coils and Trimmer Adjustments

The two i-f transformers are located on top of the chassis deck. The second i-f is the one directly behind the variable condenser. The four trimmers, two for each transformer, are accessible through holes in the tops of the cans.

The 456 kc wave trap is located on top of the chassis deck between the 6A7 tube and the first i-f transformer.

The adjustable padding condenser for the broadcast band is mounted underneath the chassis (in the corner near the 6A7 tube) with the screw adjustment accessible through a hole in the top of the chassis.

The antenna coils for the broadcast and short-wave bands are wound on one form and mounted underneath the chassis deck directly behind the adjustable padding condenser. The trimmers for these coils are also accessible through holes in the top of the chassis. The trimmer nearest the front of the chassis is the short-wave antenna trimmer. The trimmer farthest from the front of the chassis is the broadcast antenna trimmer.

The oscillator coils for the broadcast and short-wave bands are wound on one form and mounted underneath the chassis deck near the variable condenser. The trimmers for these coils are accessible through holes in the top of the chassis. The trimmer nearest the front of the chassis is for the short-wave oscillator coil and the trimmer farthest from the front is for the broadcast oscillator coil.

I-f and Wave-trap Alignment

Rotate the wave-band switch to the broadcast position, clockwise. Set the variable condenser at the minimum capacity position and feed 456 kc to the grid cap of the 6A7 tube. Adjust the four i-f trimmers for maximum response. Feed 456 kc to the antenna lead and adjust the wave-trap trimmer (mounted on wave-trap) for *minimum response*.

Short-wave Alignment (Alignment of the short-wave band should precede broadcast alignment)

Use a 400 ohm dummy antenna (a 400 ohm resistor in series with the test oscillator antenna lead) in aligning the short-wave coils. Rotate the wave-band switch to the short-wave position (counter-clockwise) and set the dial pointer exactly at 6 megacycles. Feed 6000 kc and adjust the short-wave oscillator trimmer (closest to front beside the variable condenser) for maximum response and then adjust the antenna trimmer (left side of top of chassis, closest to front). Be very careful to choose the minimum capacity peak on the oscillator trimmer. (See General Instructions below.)

Broadcast Alignment

Use a standard dummy antenna in aligning the broadcast coils. (A .0002 condenser may be used as a substitute.) Rotate the wave-band switch to the broadcast position, clockwise. Set the dial pointer at 600 and feed 600 kc. Adjust the broadcast series padder (in corner near 6A7 tube) for maximum response. Move the dial pointer to 1600 and feed 1600 kc. Adjust the broadcast oscillator trimmer (farthest from front beside the variable condenser) for maximum response and then adjust the broadcast antenna trimmer (farthest from front at left side of chassis). Return pointer to 600, feed 600 kc and readjust the broadcast series padder, rocking the variable condenser (rotate the variable condenser shaft back and forth through a small arc) for maximum response.

GENERAL INSTRUCTIONS

The set's oscillator is higher in frequency than the signal, so images should be observed on the low frequency side of the signals.

Always choose the minimum capacity peak on oscillator trimmers and maximum capacity peaks on antenna trimmers. The last motion in adjusting trimmers should always be a tightening one, not a loosening one.

Never leave a trimmer with the outside plate so loose that there is no tension on the screw. Either bend the plate up or remove the screw entirely.

Always use as weak a test signal as possible during alignment.

The adjustable padding condenser for the broadcast band is mounted underneath the chassis (in the corner near the wave-band switch) with the screw adjustment accessible through a hole in the top of the chassis. The short-wave band has a fixed padder which is a 1360 mmf molded mica condenser. (Note that this condenser is coded 1360 mmf.) When replacing this fixed padder be careful to use a condenser which has a capacity within 2% of 1360 mmf, otherwise the short-wave coils may not track.

©John F. Rider, Publisher

WESTINGHOUSE ELEC. INTERNAT. CO.

MODEL WR-102
Preliminary
Schematic, Voltage

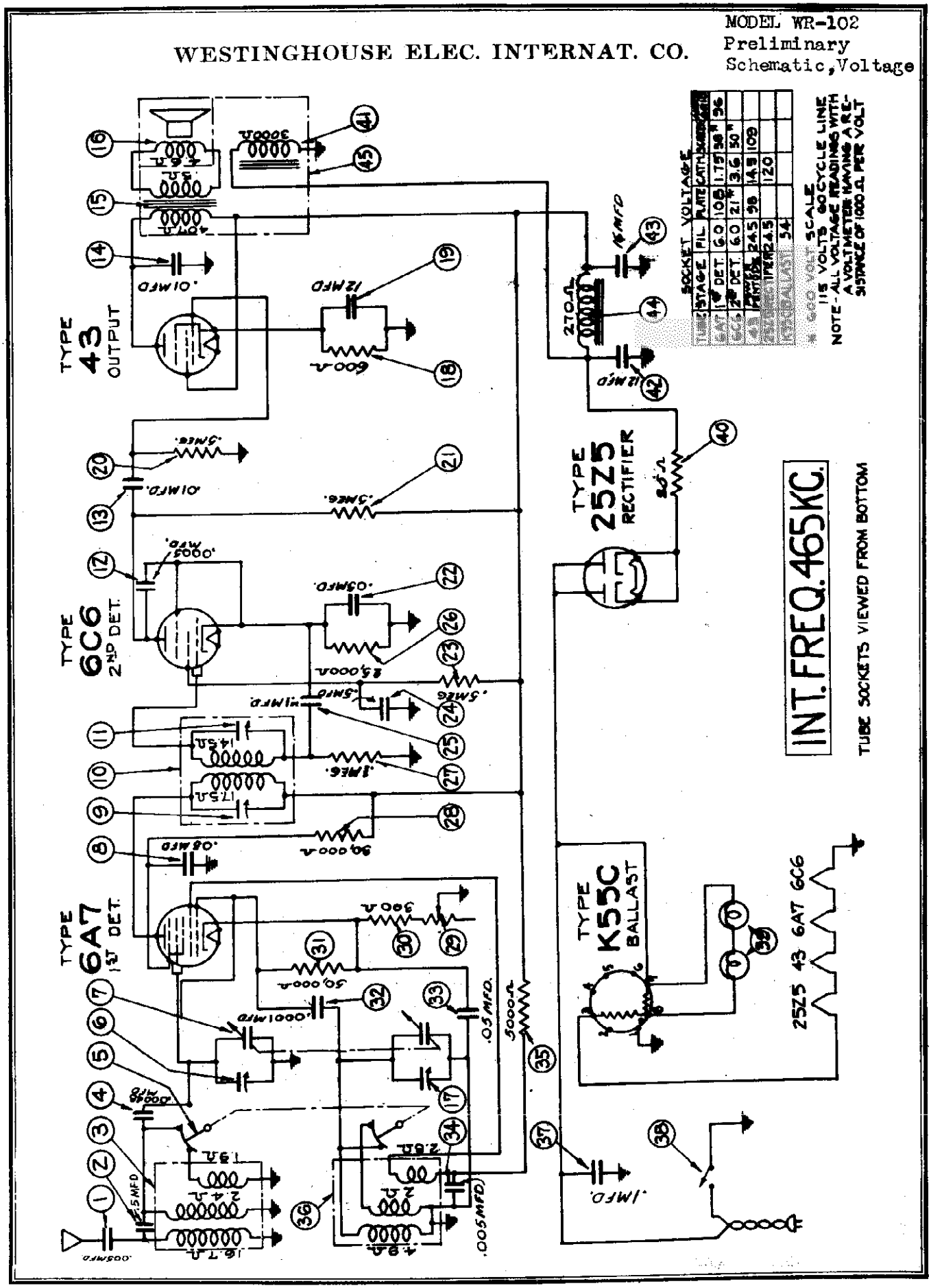

©John F. Rider, Publisher

MODEL WR-209
Preliminary
Schematic, Voltage

WESTINGHOUSE ELEC. INTERNAT. CO.

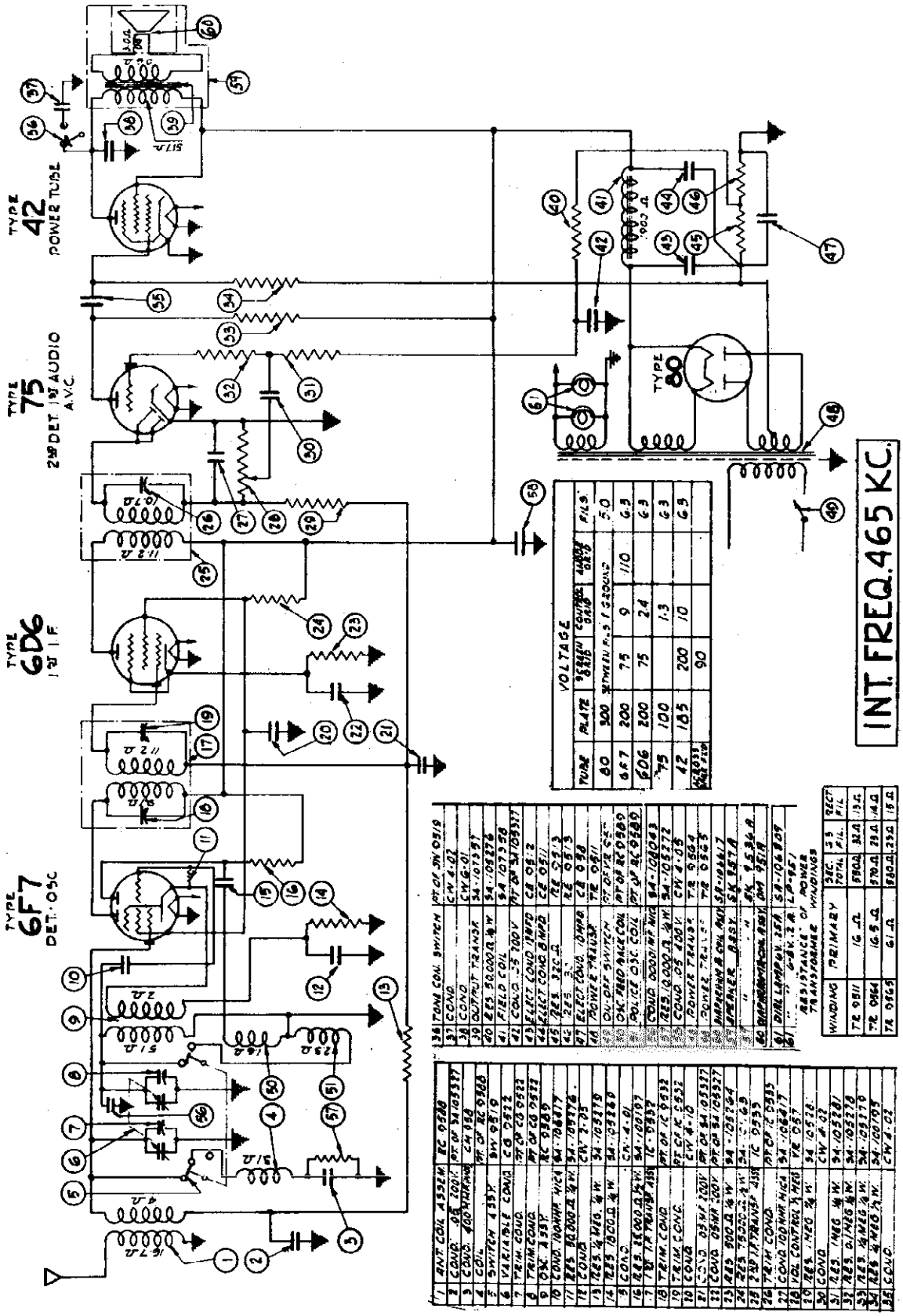

TUBE	PLATE	SCREEN	CONTROL GRID	CATHODE	VOLTS
80	300				5.0
6F7	200	75	9	110	6.3
6D6	200	75	2.4		6.3
75	100		1.3		6.3
42	185	200	10		6.3
		90			

1	ANT COIL ASSEM.	RC 0528			
2	COND. .02 MFD.	MF or RC 0503			
3	COND. .0001 MFD.	CW 1.02			
4	COIL	MF or RC 0508			
5	SWITCH ASSEM.	SW 9810			
6	VARIABLE COND.	CD 0512			
7	TRIM COND.	MF or CD 0511			
8	TRIM COND.	MF or CD 0511			
9	1ST R.F. COIL	RC 0506			
10	COND. .0001 MFD.	CW 1.02			
11	COND. .05 MFD.	CW 1.05			
12	RES. 1/4 W.	54-105175			
13	RES. 1/4 W.	54-105175			
14	COND.	CW 1.02			
15	RES. 1/4 W.	54-105175			
16	RES. 35,000 Ω 1/4 W.	54-105193			
17	TRIM COND.	MF or CD 0511			
18	COND.	CW 1.05			
19	TRIM COND.	MF or CD 0511			
20	COND. .0001 MFD.	MF or CD 0507			
21	RES. 800 Ω 1/4 W.	54-105164			
22	RES. 50,000 Ω 1/4 W.	54-105193			
23	RES. 1/4 W.	54-105175			
24	2ND R.F. COIL	RC 0505			
25	TRIM COND.	MF or CD 0511			
26	COND. .0001 MFD.	MF or CD 0507			
27	VOL. CONTROL ½ MEG.	VR 0511			
28	RES. ½ MEG. ½ W.	54-105181			
29	COND.	CW 1.02			
30	RES. 2 MEG. ½ W.	54-105181			
31	RES. 2 MEG. ½ W.	54-105181			
32	RES. ½ MEG. ½ W.	54-105178			
33	RES. ½ MEG. ½ W.	54-105178			
34	RES. ½ MEG. ½ W.	54-105178			
35	COND.	CW 1.02			

36	ANT. COIL SWITCH	PT OF SW 0513			
37	COND.	CW 1.02			
38	COND.	CW 1.01			
39	OUTPUT TRANSF.	54-105157			
40	RES. 30,000 Ω ½ W.	54-105178			
41	FIELD COIL	54-105158			
42	COND. .5-2000 MFD.	MF or 54-105157			
43	ELECT. COND. UNIT	CA 0512			
44	ELECT. COND. UNIT	CA 0511			
45	RES. 350 Ω	RE 0513			
46	RES. 2,000 Ω	RE 0515			
47	ELECT. COND. UNIT	CA 0510			
48	POINT E TRANSF.	RE 0511			
49	ON-OFF SWITCH	PT OF SW 0509			
50	ON-OFF SWITCH	PT OF SW 0509			
51	POLICE OSC. COIL	PT OF RC 0509			
52	COND. 0001 MFD.	MF or 54-105183			
53	RES. 12,000 Ω ½ W.	54-105172			
54	COND. .05 MFD.	CW 1.05			
55	POWER TRANSF.	TR 0564			
56	POWER TRANSF.	TR 0565			
57	SPEAKER ASSY.	SK 1634			
58	SPEAKER FIELD	SW 1634			
59	SPEAKER ASSY.	SK 1634			
60	DIAL LAMP ASS.	SA-106809			
61	" "	SA-106807			

ASSISTANCE OF POWER TRANSFORMER WINDINGS

WINDING	PRIMARY	SEC. TOTAL	SEC. FIL.	RECT. FIL.
TR 0511	105 V.	880Ω	2.5 A.	2.5 A.
TR 0564	105 V.	370 Ω	2.5 A.	1.4 A.
TR 0565	105 V.	880Ω	2.5 A.	1.5 A.

©John F. Rider, Publisher

MODELS WR-210, WR-310

WESTINGHOUSE ELEC. INTERNAT. CO.

Schematic, Voltage

WESTINGHOUSE RADIO MODELS WR-210 AND WR-310

PRELIMINARY

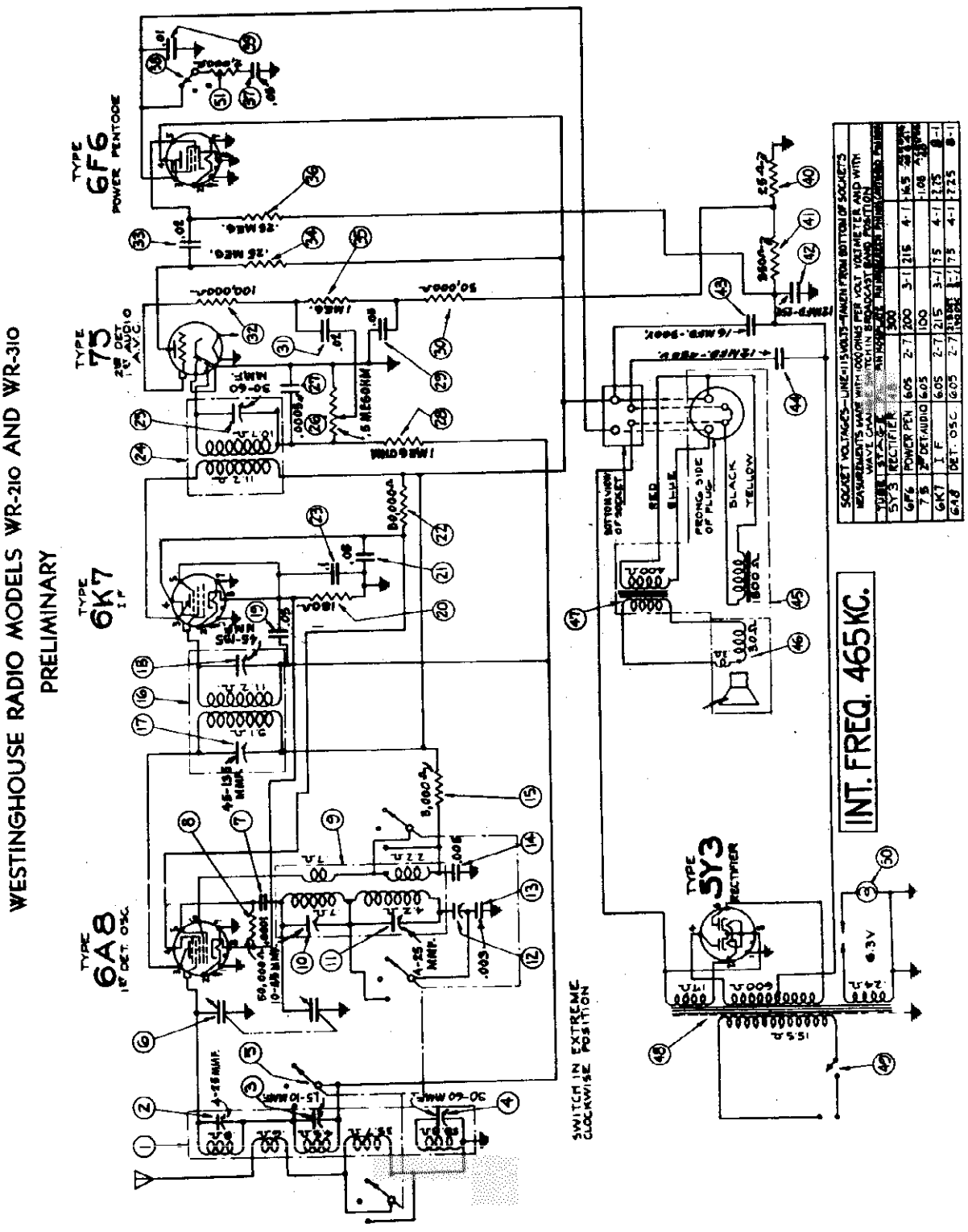

©John F. Rider, Publisher

MODEL WR-311
Schematic, Voltage

WESTINGHOUSE ELEC. INTERNAT. CO.

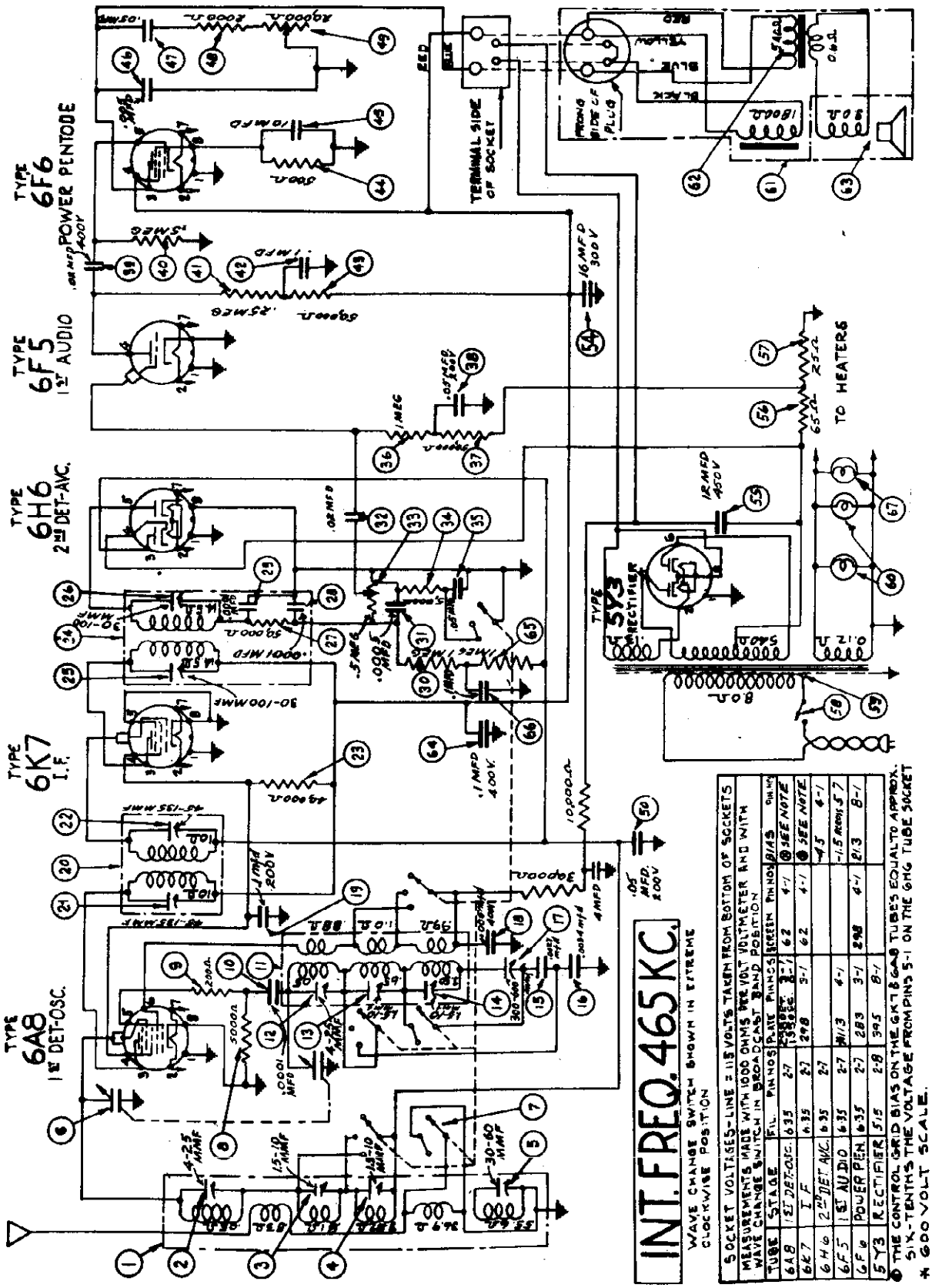

SOCKET VOLTAGES-LINE = 115 VOLTS TAKEN FROM BOTTOM OF SOCKETS
MEASUREMENTS MADE WITH 1000 OHMS PER VOLT VOLTMETER AND WITH WAVE CHANGE SWITCH IN BROADCAST BAND POSITION

TUBE	STAGE	FIL.	PLATE	SCREEN	BIAS	PIN NO.
6A8	1ST DET-OSC.	6.3	270	100	① SEE NOTE	
6K7	I.F.	6.3	270	100	① SEE NOTE	
6H6	2ND DET AVC.	6.3	2.7		-.45	4-1
6F5	1ST AUDIO	6.3	2.7	90/3	-1.5	4 & 5-7
6F6	POWER PEN.	6.3	2.7	283	248	4-1
5Y3	RECTIFIER	5.0	2.8	395	8-1	

① THE CONTROL GRID BIAS ON THE 6K7 & 6A8 TUBES EQUALS APPROX. SIX-TENTHS THE VOLTAGE FROM PINS 5-1 ON THE 6H6 TUBE SOCKET
* 600 VOLT SCALE.

©John F. Rider, Publisher

©John F. Rider, Publisher

WESTINGHOUSE

RADIO

MODEL WR-306

LINE-UP CAPACITOR ADJUSTMENTS

CAUTION: DO NOT INTERFERE WITH THE I.F. ALIGNMENT OF THIS RECEIVER EXCEPT WHEN IT HAS BEEN ABSOLUTELY DETERMINED THAT THIS IS THE CAUSE OF THE TROUBLE AND ONLY WHEN HIGH GRADE TESTING EQUIPMENT IS TO BE USED.

To align the circuits of this receiver it is essential to use a high grade modulated test oscillator, the output of which can be continuously varied with absence from overload when the individual circuits of the receiver are brought into alignment. A conventional output meter can be connected across the terminals of the speaker voice coil to indicate when the circuits are aligned. The sensitivity of the output meter must be sufficient to give satisfactory reading with a low input signal.

Before attempting to align the receiver, the service man should familiarize himself with the general layout of the chassis, the location of the tubes and various alignment condensers. Top and bottom views of the chassis are shown in figures #2,#3, and #4 and should be carefully studied before the actual work is started.

ADJUSTMENT OF I.F. (455 K.C.)

NOTE: BECAUSE OF THE VARIABLE SELECTIVITY INCORPORATED IN THIS RECEIVER, IT IS IMPORTANT THAT THE PROCEDURE OUTLINED BELOW BE FOLLOWED IN ORDER TO OBTAIN ACCURATE ALIGNMENT.

THE I.F. TRIMMERS ARE ADJUSTED ONLY WHEN THE VARIABLE SELECTOR COILS ARE PLACED IN A PARTICULAR MECHANICAL POSITION.

TO PROPERLY SET THE I.F. TRANSFORMERS, TURN THE FIDELITY CONTROL TO THE EXTREME RIGHT OR CLOCKWISE POSITION. ADJUST THE PULLEY ARRANGEMENT ON ONE OF THE TWO VARIABLE I.F. COILS IN COUNTER-CLOCKWISE DIRECTION UNTIL THEY ARE AGAINST THE STOPS. THIS IS DONE BY MANIPULATING UP THE CORDS WHICH OPERATE THE PULLEYS.

THE CIRCUITS ARE SO DESIGNED THAT THE SELECTIVITY OF THE RECEIVER CHANGES VERY LITTLE FROM MAXIMUM SELECTIVITY TO MAXIMUM SENSITIVITY, SO IT IS NOT NECESSARY TO ALIGN THE CIRCUITS PROPERLY, AS IS NECESSARY TO HAVE LESS SELECTIVITY IN THE CONVENTIONAL I.F. TRANSFORMER THAN THAT PROVIDED BY THE MAXIMUM SELECTIVITY SETTING.

TO OBTAIN THIS LESSER COUPLING MERELY TURN THE KNOB INDICATED BY "F" IN FIGURE #3, WHICH MOVES AS A STOP TO SELECT SELECTIVITY, OUT ABOUT 1/4 INCH FROM ITS ORIGINAL SETTING. THIS ALLOWS A MOVEMENT OF THE VARIABLE COILS WHICH PUTS THE RECEIVER IN A VERY SELECTIVE BUT LESS SENSITIVE CONDITION. WITH THE CONTROL IN THIS POSITION ALIGN THE I.F. STAGES AS FOLLOWS:

1. Set volume control on full and connect output meter across voice coil of speaker.
2. Set test oscillator to 455 K.C. and adjust its output to produce a measurable reading on output meter when test signal is applied to the grid of the 2nd I.F. tube (6K7) thru a .5 mfd. blocking condenser.
3. Adjust trimmer #76 to maximum output, reducing output of test oscillator as required.
4. Apply test signal to grid of 1st I.F. tube (6K7) and adjust #63 and #64 to maximum output.
5. Apply test signal to grid of 1st detector (6A8) and adjust #84 and #86 to maximum output.
6. After the above I.F. adjustments have been made, replace the stop-screw to original position.

ADJUSTMENT OF PURPLE BAND

Note: During all of the subsequent adjustments, the selectivity control should be turned to the left or counter-clockwise direction.

1. Set wave-change switch to the purple band position.
2. Set test oscillator and dial indicator to 360 K.C. and apply test signal to antenna terminal of the chassis thru a .0005 mfd. series condenser and adjust #56, #26 and #8 to maximum output.
3. Set test oscillator and dial indicator to 190 K.C. and adjust #45 to maximum output.
4. Return to 350 K.C. setting with both test oscillator and dial indicator and repeat adjustment of #3d, #38 and #6 for accuracy.

ADJUSTMENT OF BROADCAST BAND

1. Set wave-change switch to White or Broadcast Band position.
2. Set test oscillator and dial indicator to 1500 K.C. and adjust #57, #21 and #7 to maximum output.
3. Set test oscillator and dial indicator to 570 K.C. and adjust #44 to maximum output.
4. Return to 1500 K.C. setting and make readjustment of #37, #21 and #7.

ADJUSTMENT OF GREEN BAND

Note: In adjusting the Green and Red Bands, a .0002 mfd. condenser and a 600 ohms resistor connected in series should be inserted in the high side of the test oscillator leads. This condenser-resistor combination is the approximate equivalent of a short wave antenna.

1. Set wave-change switch to the Green Band position.
2. Set test oscillator and dial indicator to 5800 K.C. and adjust #55, #19 and #5 to maximum output.
3. Set test oscillator and dial indicator to 1900 K.C. and adjust #45 to maximum output.
4. Return to 5600 K.C. setting and make readjustment of #55, #19 and #6.

ADJUSTMENT OF RED BAND

1. Set wave-change switch to Red Band position.
2. Set test oscillator and dial indicator to 17000 K.C. and adjust #54, #18 and #4 to maximum output.
3. Set test oscillator and dial indicator to 6000 K.C. and adjust #42 to maximum output.
4. Return to 17000 K.C. setting and make readjustment of #54, #18 and #4.

Note: The adjustment of the two short-wave oscillator lag condensers (#42 and #43) is best made by the max-min. method. This is done as follows:

Tune the receiver with the left hand by means of the tuning knob and adjust the lag condenser in either direction and then without changing it, tune the receiver thru a maximum, noting reading of the output meter. Change the lag condenser further in the same direction, return receiver and note reading. If output drops with second adjustment, reverse direction of the adjustment of lag condenser. Continue this type of trial and error adjustment until no further improvement can be made on either the tuning control or the lag condenser are changed. While this procedure may appear difficult, facility can be easily acquired by prantice and the operation requires only a few minutes.

IMPORTANT: WHILE TESTING OR MAKING REPAIRS ON THIS RECEIVER, THE CHASSIS SHOULD NOT BE TURNED UPSIDE DOWN OR ON ITS SIDE FOR ANY LONG PERIOD OF TIME WHILE THE SET IS TURNED ON AS THE CHEMICALS IN THE ELECTROLYTIC FILTER CONDENSER WILL COME OUT THRU THE AIR VENTS MAKING THE CONDENSER APPEAR TO BE DEFECTIVE. IF LEFT IN THIS POSITION TOO LONG THE CONDENSER MAY BE INJURED.

SERVICE PARTS LIST

Dia. #	Part #	Description of Parts	List Price
1	CG 9589	Variable condenser assembly	$ 4.85
2	RE 9589	300 ohms ½ W. resistor	.10
3	SA 105896	.08 mfd. 400 V. condenser	.25
4	SW 9584	Antenna section "Precision Tuner" assembly complete with switch, coils and trimmers	5.75
5	CS 9511	4 to 25 mmf. antenna trim condenser (Red Band)	.20
6	CS 9511	4 to 25 mmf. antenna trim condenser (Green Band)	.20
7	CS 9511	4 to 25 mmf. antenna trim condenser (White Band)	.20
8	CS 9511	4 to 25 mmf. antenna trim condenser (Purple Band)	.20
9		Twisted pair of wires-part of RC 9571	
10	RC 9571	Antenna coil assembly (Red Band)	.70
11	RC 9574	Antenna coil assembly (Green Band)	.65
12	RC 9577	Antenna coil assembly (White Band)	1.10
13	RC 95803	Antenna coil assembly (Purple Band)	1.25
14	CW 9513	.05 mfd. 200 V. condenser	.25
15	CW 9513	.05 mfd. 200 V. condenser	.25
16	RE 9587	5000 ohms ½ W. resistor	.10
17	SW 9525	R.F. section "Precision Tuner" assembly complete with switch, coils and trimmers	5.00
18	CS 9511	4. to 25 mmf. R.F. trim condenser (Red Band)	.20
19	CS 9512	1.5 to 10 mmf. R.F. trim condenser (Green Band)	.20
20	CM 9518	6. mmf. mica condenser	.15
21	CS 9512	1.5 to 10 mmf. R.F. trim condenser (White Band)	.20
22	RC 9672	R.F. coil assembly (Red Band)	.70
23	RC 9575	R.F. coil assembly (Green Band)	.95
24	RC 9581	R.F. coil assembly (Purple Band)	1.10
25	RC 9578	R.F. coil assembly (White Band)	1.15
26	SA 106388	.05 mfd. 200 V. condenser	.25
27	RE 9529	500 ohms 1/4 W. resistor	.10
28	CS 9516	1.5 to 10 mmf. R.F. trim condenser (Purple Band)	.20
29	RE 9590	100,000 ohms ½ W. resistor	.10
30	SA [illegible]	mfd. 200 V. condenser	.25
31	SM [illegible]	.0065 mfd. mica condenser	.20
32	SW [illegible]	illator section "Precision Tuner" assembly complete with switch, coils and trimmers	9.75
33		to 10 mmf. trim condenser (Red Band) part of 9519	
34		to 15. mmf. trim condenser-part of CS 9520 (Green Band)	
35		to 25 mmf. trim condenser-part of CS 9518 (Purple Band)	
36		to 25 mmf. trim condenser-part of CS 9517 (White Band)	
37	RC [illegible]	illator coil assembly (Purple Band)	1.40
38	RC [illegible]	illator coil assembly (White Band)	1.50
39	RC [illegible]	illator coil assembly (Green Band)	1.50
40	RC [illegible]	illator coil assembly (Red Band)	1.35
41		to 1800 mmf. lag condenser-part of CS 9519 (Red Band)	
42		to 1800 mmf. lag condenser-part of CS 9520 (Green Band)	
43		to 600 mmf. lag condenser-part of CS 9517 (White Band)	
44		to 150 mmf. lag condenser-part of CS 9518 (Purple Band)	
45	RE [illegible]	ohms 1 W. resistor	.35
46	CW [illegible]	mfd. 200 V. condenser	.25
47	RE [illegible]	000 ohms ½ W. resistor	.10
48	SM [illegible]	.008 mfd. mica condenser	.25
49	RE 9537	50 ohms ½ W. resistor	.10
50	RE 9534	100,000 ohms ½ W. resistor	.10
51	IC 9529	1st I.F. transformer assembly	3.55
52		250 to 350 mmf. I.F. trim condenser-part of IC 9529	
53	SA 106417	.0001 mfd. mica condenser	.25
54		250 to 350 mmf. I.F. trim condenser-part of IC 9530	
55	SA 106417	.0001 mfd. mica condenser	.25
56	RE 9537	5000 ohms ½ W. resistor	.10
57	SA 106389	.006 mfd. 400 V. condenser	.30
58	FH 9584	100,000 ohms ½ W. resistor	.10
59	SA 105859	.0025 mfd. 400 V. condenser	.30
60	IC 9530	2nd I.F. transformer assembly	3.45
61		250 to 350 mmf. I.F. trim condenser-part of IC 9530	
62	SA 106417	.0001 mfd. mica condenser	.25
63		250 to 350 mmf. I.F. trim condenser-part of IC 9530	
64	SA 106417	.0001 mfd. mica condenser	.25
65	SA 106359	.005 mfd. 400 V. condenser	.30
66	RE 9587	5000 ohms ½ W. resistor	.10
67	SA 106396	.05 mfd. 200 V. condenser	.25
68	SA 106386	.08 mfd. 200 V. condenser	.25
69	VR 9511	Tone control switch	1.25
70	SA 106387	1000 ohms ½ W. resistor	.30
71	VR 9538	1000 ohms ½ W. resistor	.10
72	FH 9539	4000 ohms ½ W. resistor	.10
73	IC 9535	3rd I.F. transformer	1.90
74		25 to 100 mmf. I.F. trim condenser-part of IC 9535	
75		.00025 mfd. mica condenser-part of IC 9535	
76		100,000 ohms ½ W. resistor-part of IC 9535	
77		.0001 mfd. mica condenser-part of IC 9536	
78		250,000 ohms ½ W. resistor-part of IC 9536	
79		.01 mfd. 600 V. condenser	.20
80	SA 102504	Volume control 1 meg.	1.00
81	VR 9510	5000 ohms ½ W. resistor	.30
82	SA 105849	Input transformer	3.25
83	TH 9516	.02 mfd. 400 V. condenser	.20
84	CW 9512	½ meg. ½ W. resistor	.20
85	SA 102546	10 mfd. 25 V. elect. condenser-part of SA 107913	
86	SA 103852	.002 mfd. 500 V. condenser	.25
87	SA 103852	.002 mfd. 500 V. condenser	.25
88	CW 9512	.02 mfd. 400 V. condenser	.20
89		10 mfd. 25 V. elect. condenser-part of SA 107913	
90	CW 9512	.02 mfd. 400 V. condenser	.20
91	SA 102546	½ meg. ½ W. resistor	.20
92	SA 106821	1 meg. ½ W. resistor	.20
93	SA 109422	.08 mfd. 400 V. condenser	.25
94	SA 106396	.08 mfd. 200 V. condenser	.25
95	SA 106274	20,000 ohms ½ W. resistor	.20
96	SA 106278	250,000 ohms ½ W. resistor	.20
97	SA 106277	75,000 ohms ½ W. resistor	.20
98			
99			
100	RE 9586	20,000 ohms ½ W. resistor	.10
101	CW 9518	.08 mfd. 400 V. condenser	.20
102	CE 9517	18. mfd. 300 V. electrolytic condenser	1.10
103	RE 9521	Voltage divider resistor 15,800 ohm tapped	1.00
104	SI 9588	Tuning meter assembly	2.80
105	TR 9517	Power transformer	6.25
106		Line switch-part of VR 9511	
107	LP 958	Tuning meter light (6.3 volts)	.15
108	LP 959	Dial lights (4 used) (6.3 volts)	.15
109	CE 9516	8. mfd. 450 V. electrolytic condenser	1.10
110	SA 101896	Choke coil assembly	2.25
111	CE 9516	8. mfd. 450 V. electrolytic condenser	1.10
112	TR 9513	Speaker output transformer	2.00
113	SK 959	Speaker	10.75
114	DM 956	Diaphragm and voice coil assembly	1.25

MAIN ASSEMBLIES

Part #	Description of Parts	List Price
	CH 9540 Chassis assembly	
	CH 9537 Chassis assembly - "Precision Tuner" unit	

MAIN ASSEMBLIES [cont'd]

Part #	Description of Parts	List Price
KA 9529	Cabinet	
SK 959	Speaker	10.75

BRACKETS AND CLIPS

RP 956	Tension clip for expander cable	.05
RK 95122	Bracket and switch assembly (tone control)	.35
RK 95120	Bracket assembly dial scale	.30

CABLE AND CABLE ASSEMBLIES

CB 9513	Line cable with plug	.30
PA 97186	Expander and dial drive cord - 31" long	.05

DUAL OSCILLATOR TRIM CONDENSERS

CS 9517	Dual trim condenser (Black Band)	.55
CS 9518	Dual trim condenser (Purple Band)	.55
CS 9519	Dual trim condenser (Red Band)	.75
CS 9520	Dual trim condenser (Green Band)	.75

TUBE SOCKETS

SO 954	Tube socket - 8 prong	.20
SA 104618	Tube socket - 4 prong	.15
SA 107257	Speaker socket	.10

SCREWS AND WASHERS

SC 101788	Screws - chassis mounting	.05
SC 103709	Self tapping screws #10 x 3/8"	.05
SC 105648	Self tapping screws # 7 x 1/4"	.05
SC 104714	Self tapping screws # 4 x 1/4"	.05
WA 99740	Plain washer for chassis mounting screw	.05
WA 105919	Lock washer for chassis mounting screw	.05

SPEAKER PARTS

DM 956	Diaphragm and coil assembly	1.25
FS 101740	Copper ring	.30
FS 102870	Steel plate	.40
FS 101742	Paper washer	.05
CL 9557	Speaker field coil	1.85
AA 101738	Core and frame assembly	.85
SC 102138	Retaining screw - core and frame	.05
FS 78881	Cable clamp	.05
FS 101865	Diaphragm fastening screw	.05
TR 9513	Speaker output transformer	2.00
SC 101894	Fastening screw - output transformer	.05
AA 107878	Speaker plug - 4 prong	.10
AA 107879	Speaker plug cover	.10
BO 956	Baffle ring (metal)	1.85
RG 956	Steel ring	.55

MISCELLANEOUS

KS 9582	Knob - tuning large	.30
KS 9581	Knob - tuning small	.20
KS 9581	Knob - volume control and wave change switch	.30
GA 956	Rubber gasket for dial	.50
LI 9587	Celluloid for tuning meter	.05
LI 95785	Terminal strip - antenna and ground	.20
RE 9584	Vernier drive shaft assembly	.70
AR 9590	Wave change switch shaft assembly	.85

MISCELLANEOUS [cont'd]

SI 9612	Dial indicator	.85
LP 956	Dial light	.15
FF 103184	Spring for dial cable	.05
CV 98100	Cover for dial scale	.70
DE 9633	Dial scale	.50
SI 9606	Band indicator assembly	.10
SO 954	Dial lamp socket	.05
SP 9590	Spring clip on I.F. coil assembly	.05
SP 9587	Hook - expander cable (2 used)	.05
FS 9510	Large pulley for I.F. expander	.25
SP 9618	Spring hook for expander cable (1 used)	.10
RP 956	Clip for expander cable (2 used)	.05
GE 956	Celluloid gear and pinion assembly (second band)	.55
DI 9635	Dial Indicator (second band)	.05
GE 955	Small pinion gear (second band)	.05
IS 95103	Shield for dial lamp	.05
FF 98776	Spring ring used with GE 956	.05
FU 9588	Celluloid "Bull's eye" on cabinet	.05

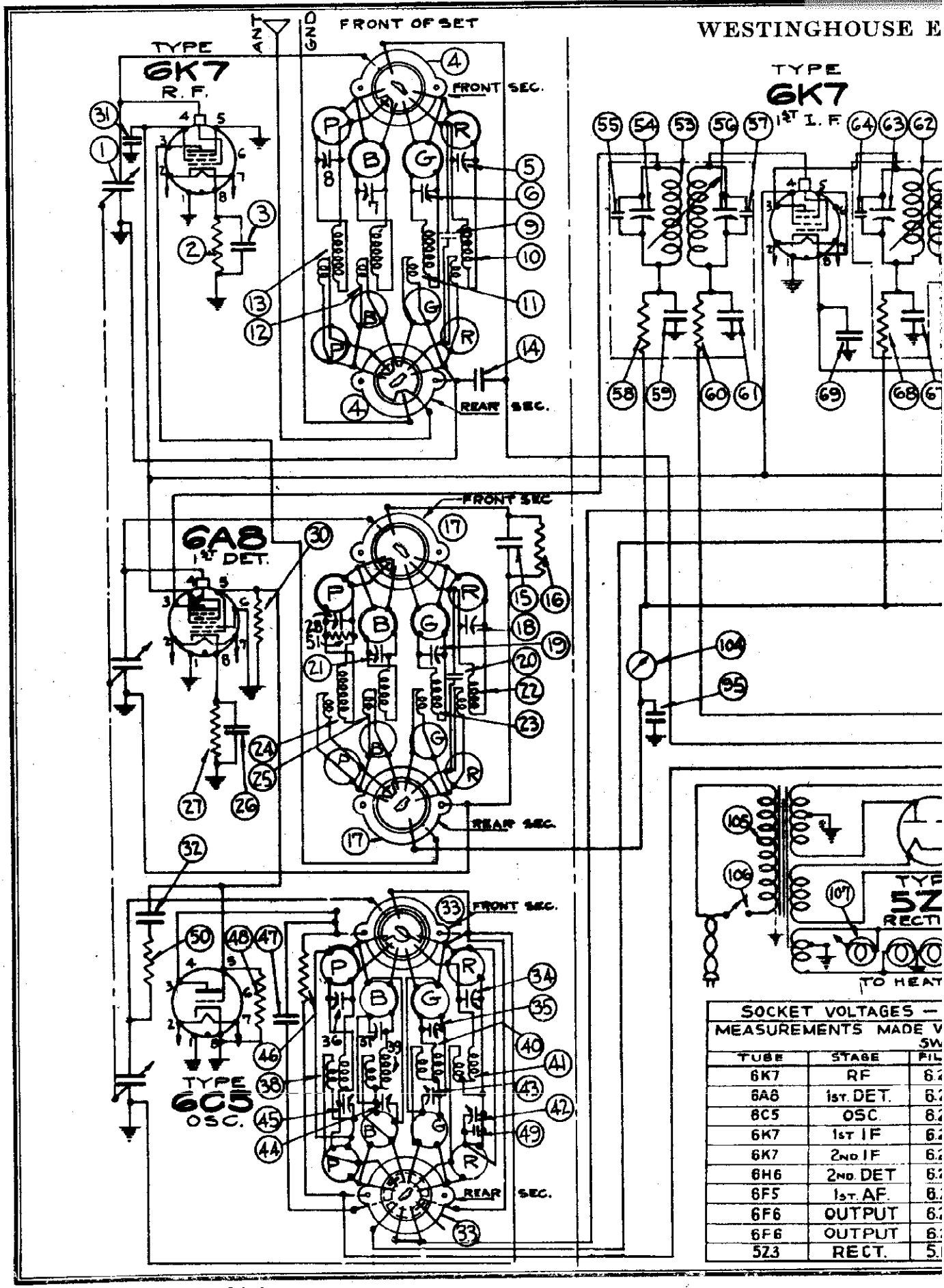

SOCKET VOLTAGES — MEASUREMENTS MADE V SW		
TUBE	STAGE	FIL
6K7	RF	6.2
6A8	1ST. DET.	6.2
6C5	OSC.	6.2
6K7	1ST IF	6.2
6K7	2ND IF	6.2
6H6	2ND. DET	6.2
6F5	1ST. AF.	6.2
6F6	OUTPUT	6.2
6F6	OUTPUT	6.2
5Z3	RECT.	5.

©John F. Rider, Publisher

LEC. SUPPLY CO.

MODEL WR-306
Schematic, Voltage
Resistance

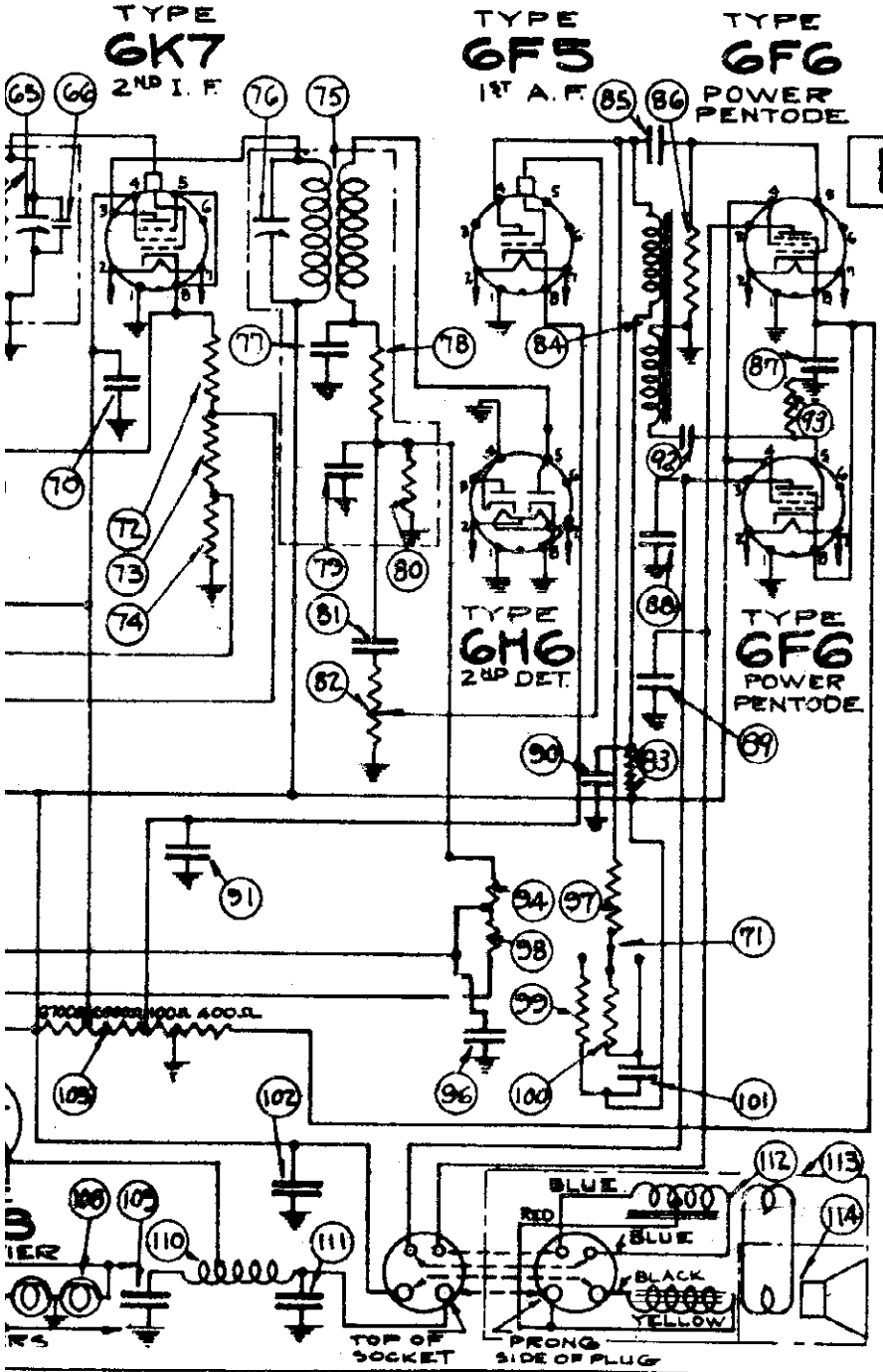

D.C. RESISTANCE MEASURED WITH WAVE-CHANGE SWITCH IN CORRESPONDING BAND POSITION			
COIL	DIA. Nº	PRIM.	SEC.
P-ANT.	13	130 Ω	25 Ω
P-RF.	24	38 "	25 "
P-OSC.	38	8.0 "	13.5 "
B-ANT.	12	22 "	4 "
B-RF.	25	.5 "	4.5 "
B-OSC.	39	1.5 "	3 "
G-ANT.	11	3.2 "	1 "
G-RF.	23	1.5 "	1 "
G-OSC.	40	.5 "	1 "
R-ANT.	10	1 "	.4 "
R-RF.	22	2 "	.4 "
R-OSC.	41	.5 "	.4 "
1ST. IF.	53	3.5 "	3.5 "
2ND. IF.	62	3.5 "	3.5 "
3RD. IF.	75	11.5 "	11.5 "
CHOKE	110	350 "	
1ST. AF.			
TRANS.	84	3200 "	3800 "
OUTPUT		265 "	
TRANS.	112	312 "	.03 "
SPKR.			
FIELD		1900 "	
VOICE			
COIL	114	2.6 "	

INE = 115 VOLTS TAKEN FROM BOTTOM OF SOCKETS
TH A 1000 OHMS PER VOLT VOLTMETER AND WITH WAVE-CHANGE
CH IN BROADCAST BAND POSITION

PIN NOS.	PLATE	PIN NOS.	SCREEN	PIN NOS.	CATHODE	PIN NOS.
2 - 7	245	3 - 1	100	4 - 1	2.5	1 - 8
2 - 7	240	3 - 1	100	4 - 1	2.2	1 - 8
2 - 7	200	3 - 1				
2 - 7	240	3 - 1	100	4 - 1	8.0	1 - 8
2 - 7	255	3 - 1	100	4 - 1	8.0	1 - 8
2 - 7						
2 - 7	250	4 - 1			1.75	1 - 8
2 - 7	350	3 - 1	255	4 - 1	19.5	1 - 8
2 - 7	350	3 - 1	255	4 - 1	19.5	1 - 8
	720					

MODEL WR-306
Circuit Data
Socket, Trimmers
Chassis

WESTINGHOUSE ELEC. SUPPLY CO.

GENERAL DESCRIPTION

This model is a ten tube, four band superheterodyne receiver designed for world wide reception including the U.S. Weather Band and employs the new all-metal tubes.

The circuit employs a high frequency amplifier using the new type 6K7 tube. This is followed by the first detector circuit employing a 6A8 tube and a separate oscillator (type 6C5). These tubes with their associated circuits (coils, variable condensers, trim condensers for R.F. and detector stages, and trim and lag condensers for the oscillators) comprise a complete assembly in compact form separately cushioned from the main chassis. This assembly is known as the "Precision Tuner". In addition the set includes a new and novel development of intermediate frequency circuits which allows the adjustment of the band width of the amplifier to be varied over a wide range. At one end of the range is the most selective condition which allows single channel reception even under the influence of powerful nearby stations. At the other end the transmission characteristic of the amplifier is so changed as to allow transmission without attenuation of frequencies up to 7000 cycles on either side of the carrier. As a matter of fact, the amplifier is overcoupled to such a degree that frequencies in the neighborhood of five thousand cycles on either side of the carrier are transmitted at greater efficiency than frequencies close to the carrier. This design is necessary since radio frequency circuits give rise to some side band attenuation, which must be compensated for in the I.F. amplifier. The net result is a smooth transmission curve over the entire band.

From the oscillator the energy passes thru a variable selector I.F. transformer and to a 6K7 amplifier tube. Then thru another variable selector I.F. transformer and to an additional 6K7 amplifier tube. From here further selection takes place in the 3rd I.F. transformer where the energy is passed on to the 2nd detector and A.V.C. diode (type 6H6). After detection there follows a first audio amplifier (type 6F5) and by means of an audio transformer the energy is sent to the power output stage comprising two 6F6 pentode in push-pull. A 523 rectifier supplies the necessary direct current for the tubes.

REMOVING INDIVIDUAL COIL AND SWITCH SECTIONS OF "PRECISION TUNER"

If a component part located underneath the switch and coil assemblies of the "Precision Tuner" has to be replaced or a section of the unit has to be removed for inspection, each section can easily be removed separately. To do this proceed with care as follows:

1. Remove the three coil shields.
2. Remove the two self-tapping screws which fasten the mounting plate of the wave-change switch shaft to the chassis frame. Pull switch shaft straight out.
3. Unsolder the stator and rotor leads from the gang condenser.
4. The fastening screws for the switch sections are located on top of the "Precision Tuner" and are indicated by X,Y, and Z in Figure #3. Remove the corresponding screw.
5. Each individual section can then be pulled out straight.

Note: On the R.F. section, the plate lead from the 6K7 socket will have to be unsoldered from the switch terminal before the section can be removed.

On the oscillator section, the plate lead will have to be unsoldered from the 6C5 socket.

6. After repairs have been made resolder the plate leads mentioned above and replace the section being careful to observe that the slotted holes in the switch bracket line up with the round guide pins on the base plate of the "Precision Tuner". This is IMPORTANT as the switch shaft cannot be inserted if the switch brackets do not line up.
7. Replace the section fastening screw.
8. Resolder the stator and rotor leads on gang condenser.
9. Replace the switch shaft and the mounting fastening screws. When inserting the switch shaft, be careful that all the switch discs are in the same position. Otherwise the switch shaft will not slide in. NEVER force the shaft into the switch discs. If shaft does not slide in freely, examine the position of the slot in each switch discs.
10. Before replacing the coil shields, it might be advisable to bend the shields slightly to assure that positive contact is made. To do this hold the shield with your two hands using the thumbs and first two fingers as shown in figure #1. Pull out the ends of the shield slightly and at the same time apply a little pressure on the sides of the shield as indicated by the arrows in the drawing. Then replace the shields and observe that they fit tightly. In addition to assuring positive contacts, this will also prevent the shields from rattling.

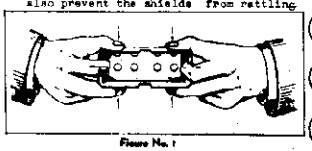

Figure No. 1

ELECTRICAL SPECIFICATIONS

Type and Number of Tubes --- 3#6K7, 1#6A8, 1#6C5, 1#6H6, 1#6F5, 2#6F6, 1#5Z3 - Total 10
Power Supply ---------- 105 to 125 volts, 50 to 60 cycles
Power Consumption ---------- 90 Watts
Maximum Undistorted Output ---------- 8 Watts
Maximum Output ---------- 10 Watts
Tuning Ranges ---------- (Purple Band 120 K.C. to 350 K.C. (White Band 540 K.C. to 1800 K.C. (Green Band 1800 K.C. to 6000 K.C. (Red Band 6000 K.C. to 18500 K.C.
Line-Up Frequencies ------- I.F. 466K.C.,456K.C., 130K.C., 1400K.C., 5700K.C., 5500 K.C. 1900K.C.,17000K.C. and 6000 K.C.

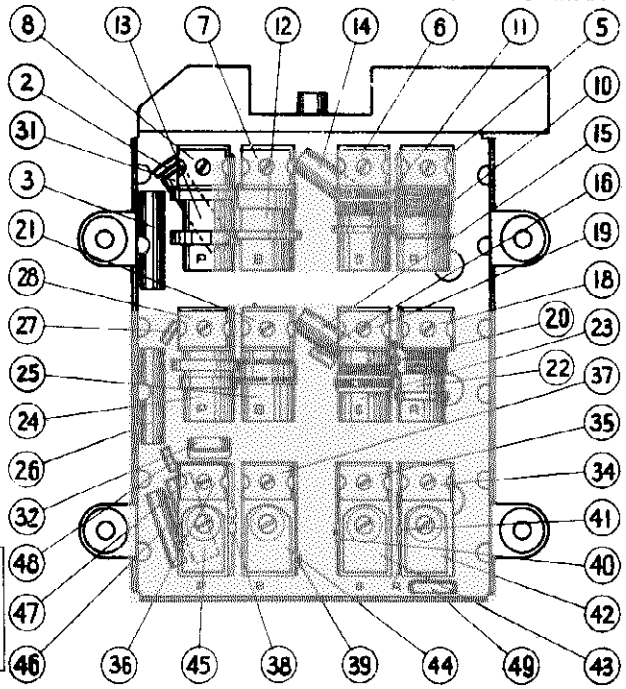

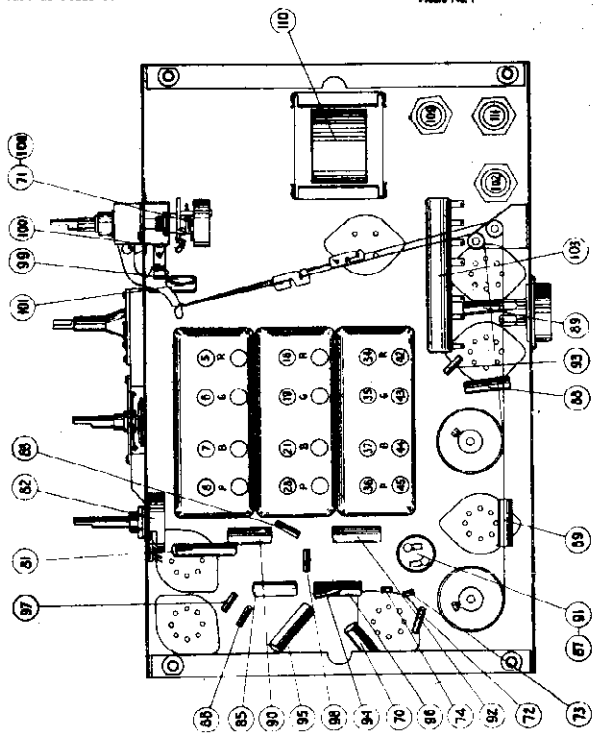

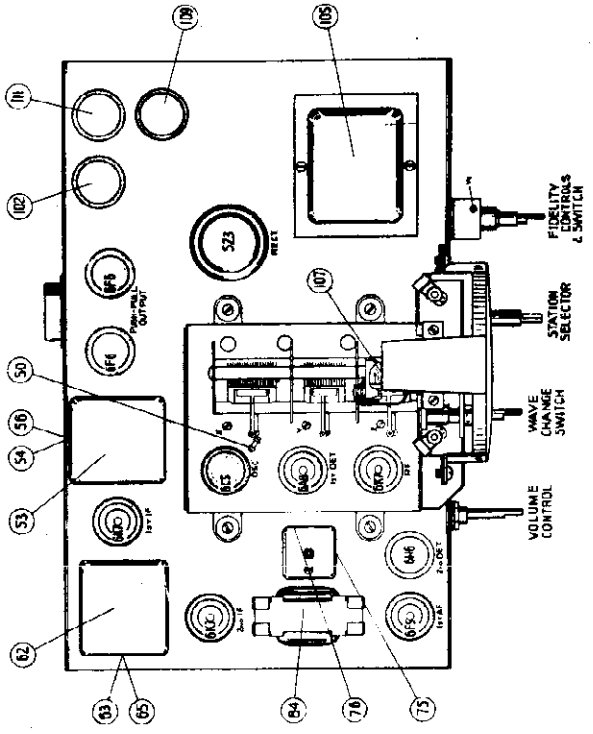

©John F. Rider, Publisher

WILCOX-GAY CORP.

MODEL 3JC5
MODEL 3JE5
Schematics, Socket, Parts

MODEL 3JE5

CODE	PART NO.		RESISTORS
R1	20-1125	130	Ohm Resistor in Power Cord
R2	19-1296	10,000	Ohm Volume Control & Switch
R3	53-922	75,000	Ohm Resistor I.F. Cathode Feed
R4	53-898	50,000	Ohm Resistor Oscillator Grid
R5	53-1062	250	Ohm Resistor 6A7 Cathode
R6	53-1063	500	Ohm Resistor I.F.Cathode
R7	53-941	20,000	Ohm Resistor 77 Cathode
R8	53-921	40,000	Ohm Resistor Screen Feed
R9	53-1308	20	Ohm Resistor Pilot Light Shunt
R10	53-923	100,000	Ohm 77 Plate Hum Resistor
R11	53-924	250,000	Ohm Resistor 77 Plate
R12	53-925	500,000	Ohm Resistor Output Grid
R13	53-1063	500	Ohm Resistor Output Cathode

			CONDENSERS
C1	77-833	536	MMFD. Oscillator Section of 3 Gang
C2	77-833	371	MMFD. Preselector Section of 3 Gang
C3	77-833	371	MMFD. Preselector Section of 3 Gang
C4	78-2010		Foreign Band Preselector Trimmer
C5	78-2008		First I.F. Primary Trimmer
C6	78-2007		First I.F. Secondary Trimmer
C7	78-2009		Second I.F. Trimmer
C8	76-265	.001	Mfd. Mica 77 Plate By-Pass
C9	76-269A	.01	Mfd. 400 Volt Audio Feed Condenser
C10	76-343A	.004	Mfd. Paper Output Plate By-Pass
C11	18-928	25	Mfd. 25 Volt Output Cathode
C12	75-272A	.1	Mfd. 200 Volt 77 Plate Hum Filter
C13	75-267A	5.	Mfd. 200 Volt 77 Cathode By-Pass
C14	75-272A	.1	Mfd. 200 Volt 78 Cathode By-Pass
C15	75-272A	.1	Mfd. 200 Volt 6A7 Cathode By-Pass
C16	76-264	.00005	Mfd. Mica Oscillator Grid Condenser
C17	76-265	.001	Mfd. Mica Antenna Series Cond.
C18	75-272A	.1	Mfd. 200 Volt Screen By-Pass
C19	75-267A	.5	Mfd. 200 Volt B Supply By-Pass
C20	75-272A	.1	Mfd. 200 Volt 110 volt Line By-Pass
C21	18-1065	10	Mfd. 150 Volt Dry Electrolytic Cond.
C22	18-1065	4	Mfd. 150 Volt Dry Electrolytic Cond.
C23	18-1065	4	Mfd. 150 Volt Dry Electrolytic Cond.

L15	64-1260	3000 Ohm Speaker Field
L16	14-940	20 Henry Filter Choke

MODEL 3JC5

R1	20-1125	130	Ohm Resistor in Power Cord
R2	19-1296	10,000	Ohm Volume Control & Switch
R3	53-898	50,000	Ohm Resistor Oscillator Grid
R4	53-1062	250	Ohm Resistor 6A7 Cathode
R5	53-922	75,000	Ohm Resistor I.F.Cathode Feed
R6	53-1308	20	Ohm Resistor Pilot Light Shunt
R7	53-1063	500	Ohm Resistor I.F.Cathode
R8	53-941	20,000	Ohm Resistor Second Detector Cathode
R9	53-921	40,000	Ohm Resistor Screen Feed
R10	53-923	100,000	Ohm 77 Plate Hum Resistor
R11	53-924	250,000	Ohm Resistor 77 Plate
R12	53-925	500,000	Ohm Resistor Output Grid
R13	53-1063	500	Ohm Resistor Output Cathode

C1	77-833	336	MMFD. Oscillator Section 3 Gang
C2	77-833	371	MMFD. Preselector Section 3 Gang
C3	77-833	371	MMFD. Preselector Section 3 Gang
C4	78-2008		First I.F. Primary Trimmer
C5	78-2007		First I.F. Secondary Trimmer
C6	78-766		Second I.F. Trimmer
C7	75-272A	.1	Mfd. 200 Volt 6A7 Cathode
C8	75-272A	.1	Mfd. 200 Volt 78 Cathode
C9	75-267A	5.	Mfd. 200 Volt 77 Cathode
C10	75-272A	.1	Mfd. 200 Volt 77 Plate Hum Filter
C11	76-265	.001	Mfd. Mica 77 Plate By-Pass
C12	75-269A	.01	Mfd. 400 Volt Audio Feed Condenser
C15	75-345A	.004	Mfd. Paper Output Plate By-Pass
C14	18-928	25	Mfd. 25 Volt Output Cathode
C15	75-267A	.5	Mfd. 200 Volt B Supply By-Pass
C16	18-1065	4	Mfd. 150 Volt Dry Electrolytic Condenser
C17	18-1065	4	Mfd. 150 Volt Dry Electrolytic Condenser
C18	18-1065	10	Mfd. 150 Volt Dry Electrolytic Condenser
C19	75-272A	.1	Mfd. 200 Volt 110 Volt Line By-Pass
C20	75-272A	.1	Mfd. 200 Volt Screen By-Pass
C21	76-264	.00005	Mfd. Mica Oscillator Grid Condenser
C22	76-265	.001	Mfd. Mica Antenna Series Condenser

L11	64-1260	3000 Ohm Speaker Field
L12	14-940	20 Henry Choke

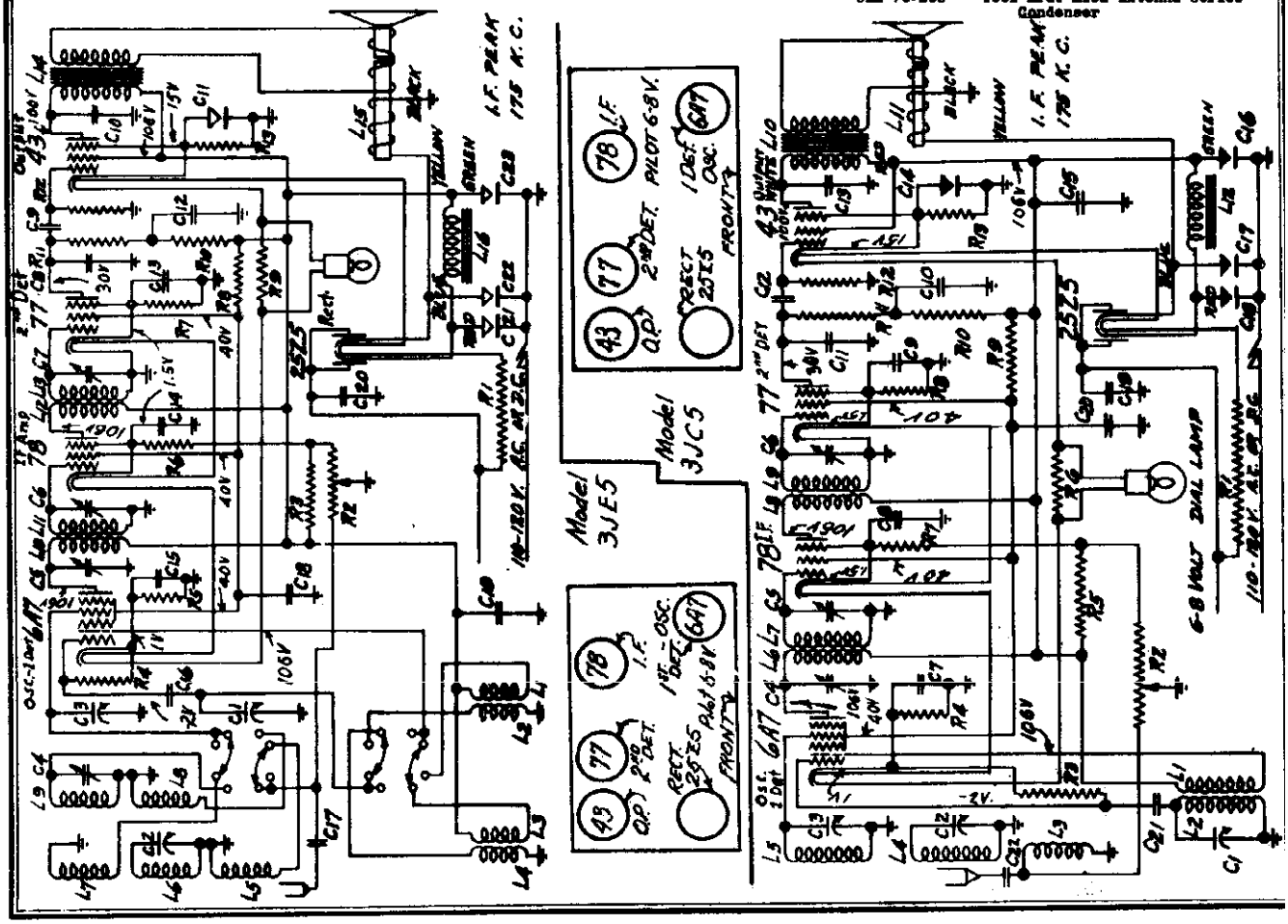

©John F. Rider, Publisher

MODELS 3JM6, 3JQ6
Schematic, Voltage
Socket, Parts

WILCOX-GAY CORP.

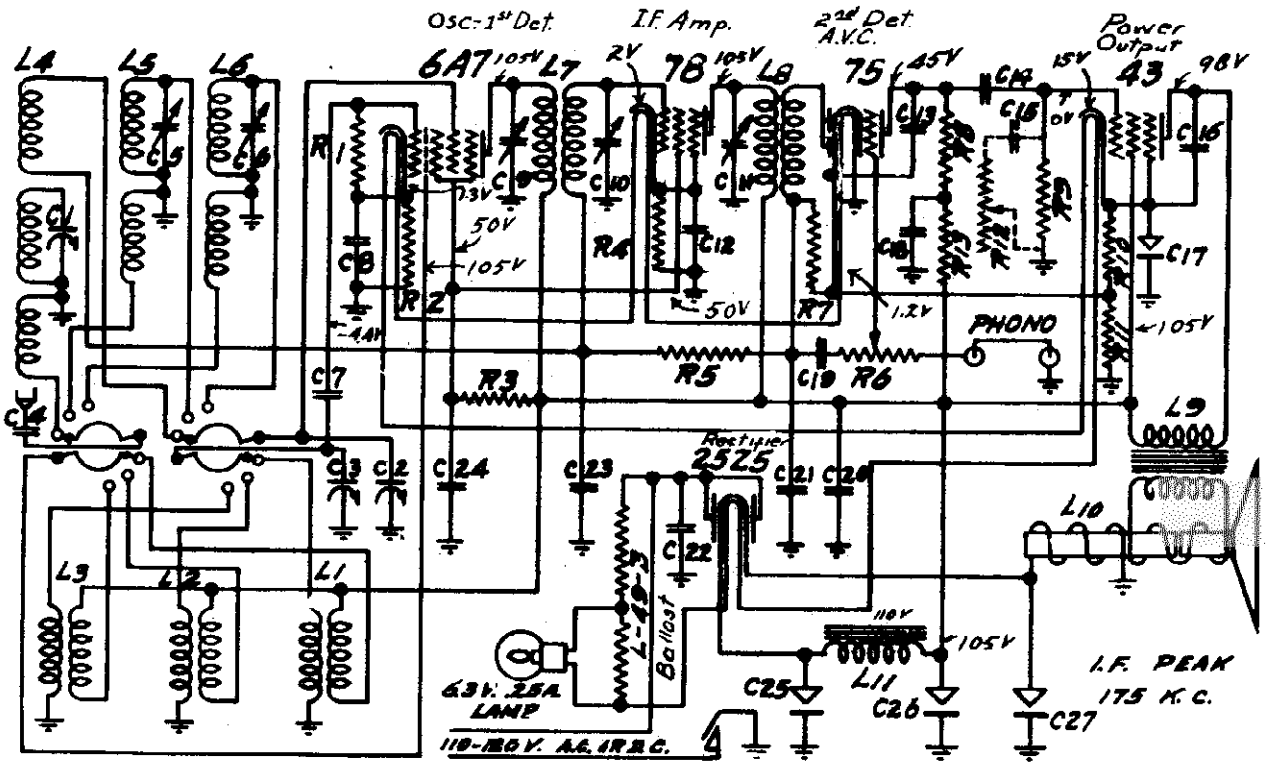

RESISTORS

CODE	PART NO.	
R1	53-898	50,000 Ohm Oscillator Grid Resistor
R2	53-1062	250 Ohm Oscillator Cathode Resistor
R3	53-1042	25,000 Ohm 6A7 & 78 Screen Resistor
R4	53-1063	500 Ohm 78 Cathode Resistor
R5	53-926	1 Meg Ohm A.V.C. Network Resistor
R6	19-1291	500,000 Ohm Volume Control & Switch
R7	53-925	500,000 Ohm Diode Resister
R8	53-924	250,000 Ohm 75 Plate Resistor
R9	53-925	500,000 Ohm 43 Grid Resistor
R10	53-1062	500 Ohm 43 Cathode Resistor
R11	53-1122	40 Ohm 75 Cathode Resistor
R12	19-1317	250,000 Ohm Tone Control on Model A-17
P13	53-898	50,000 Ohm 75 Plate Hum Resistor

INDUCTANCES

L1	17-2106	Broadcast Oscillator Coil Assembly
L2	17-2105	Police Band Oscillator Coil Assembly
L3	17-2095	Foreign Band Oscillator Coil Assembly
L4	17-2100	Broadcast Preselector Coil Assembly
L5	17-2104	Police Band Preselector Coil Assembly
L6	17-2096	Foreign Band Preselector Coil Assembly
L7	68-2012	First I. F. Transformer Assembly
L8	17-2102	Second I. F. Transformer Assembly
L9	64-1260	6½" Speaker 43 Output Trans. on L10
L10	64-1260	6½" Speaker 3000 Ohm Field
L11	14-940	20 Henry Filter Choke

CONDENSERS

C1	77-833	366 MMFD. Preselector Section of 3 Gang
C2	77-833	366 MMFD. Preselector Section of 3 Gang
C3	77-833	328 MMFD. Oscillator Section of 3 Gang
C4	76-2003	.01 Mfd. 400 V. Paper Antenna Series Cond.
C5	78-2010	3-30 MMFD. Police Band Preselector Trimmer
C6	78-2010	3-30 MMFD. Foreign Band Preselector Trimmer
C7	76-2002	.00005 Mfd. Mica Oscillator Grid Condenser
C8	75-2005	.1 Mfd. 200 V. Paper Oscillator Cathode Cond.
C9	78-2008	First I. F. Primary Trimmer
C10	78-2011	First I. F. Secondary Trimmer
C11	78-2009	Second I. F. Primary Trimmer
C12	75-2005	.1 Mfd. 200 V. Paper 78 Cathode By-Pass Cond.
C13	76-265	.001 Mfd. Mica 75 Plate Filter Condenser

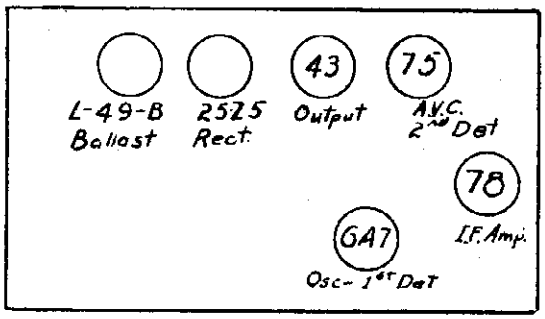

(3JQ6 is 3JM6 with Addition of a Tone Control.)

CONDENSERS

C14	76-2003	.01 Mfd. 400 V. Paper Audio Feed Cond.
C15	75-2005	.01 Mfd. 400 V. Paper Tone Control Cond. on A-17
C16	75-2002	.004 Mfd. 600 V. Paper Output Plate Filter Cond.
C17	18-928	25 Mfd. 25 V. Elect. Output Cathode By-Pass Cond.
C18	75-2006	.1 Mfd. 200 V. Paper 75 Plate Hum Filter Cond.
C19	75-2005	.01 Mfd. 400 V. Paper Audio Feed Condenser
C20	78-2011	.5 Mfd. 200 V. Paper B Supply By-Pass Cond.
C21	76-307	.0005 Mfd. Mica Diode Filter Condenser
C22	75-2006	.1 Mfd. 200 V. Paper Line By-Pass Condenser
C23	75-2006	.1 Mfd. 200 V. Paper A.V.C. Network By-Pass Cond.
C24	75-2006	.1 Mfd. 200 V. Paper Screen By-Pass Condenser
C25	18-2005	11 Mfd. 150 W.V. Dry Electrolytic Filter Cond.
C26	18-2005	4 Mfd. 150 W.V. Dry Electrolytic Filter Cond.
C27	18-2005	4 Mfd. 150 W.V. Dry Electrolytic Filter Cond.

©John F. Rider, Publisher

ALIGNMENT- MODELS 3JM6,A15,A16, 3JQ6,A17

APPARATUS:

Signal Generator having output frequencies of from 20 megacycles to 150 kilocycles.
Output Meter.
Small tools such as screwdriver, 1/4" wrench, etc.

GANGING OF INTERMEDIATE FREQUENCY AMPLIFIER:

The signal generator should be adjusted to 175 kilocycles and its output connected directly (no dummy antenna being used) to the grid of the first detector, which is the tube immediately to the right of the variable condenser when facing chassis. With the volume control in its full-on position, the output of the signal generator should be so adjusted that a medium signal is indicated on the output meter not to exceed 50 volts across the output transformer. The last intermediate frequency transformer should now be adjusted and this adjustment is located on the right rear chassis skirt. After peaking this transformer, care being used to see that the output at no time goes to 50 volts across the primary of the output transformer, the first intermediate frequency transformer, which is that transformer on the right hand front side of chassis, should be trimmed, trimming first the secondary side and then the primary side, which adjustments are the left and right adjustments respectively as facing front of receiver. After ganging the three intermediate frequency adjustments in this manner, they should again be gone over and very carefully peaked.

GANGING OF OSCILLATOR AND PRESELECTOR CIRCUITS:

(Broadcast Band)

The signal generator and scale reading of the receiver should now be set at 1400 kilocycles. The wave change switch, which is the control on the left hand front chassis skirt of the receiver should be turned to its furthest counterclockwise position. The output of the signal generator should be connected to a standard dummy antenna to the frame and antenna lead of the receiver. The oscillator circuit should now be trimmed, which adjustment may be found above the rear gang of the variable condenser until the signal is peaked. The output of the signal generator should be regulated so that this voltage does not exceed 50 volts across the output transformer terminals. The signal generator should now be adjusted to 600 kilocycles and the tuning control of the receiver varied in the vicinity at a scale reading of 600 kilocycles to check the reading of the receiver. In the event this reading is off, the slotted plates of the oscillator condenser gang should be bent in or out until the scale reading is 600 kilocycles. Again adjusting the scale reading and signal generator to 1400 kilocycles, the oscillator adjustment should again be checked to compensate for any change the previous adjustment may have had and the two preselector circuits trimmed to resonance, which adjustments are the center and front adjustments of the variable condenser.

(Foreign Band)

The signal generator should now be adjusted to 15 megacycles and the wave change switch should be turned to its furthest clockwise position. By varying the tuning adjustment of the receiver back and forth in the vicinity of 15 megacycles as indicated on the red scale, the signal should be found in this immediate vicinity. There is no trimming adjustment for this band on the oscillator coil because it was the desire during design to extend the high frequency portion of the tuning range as far as possible. After again peaking in the above manner, the preselector on the foreign band should be adjusted, which adjustment is to be found at the center of the front chassis skirt and is the left adjustment of the two occupying this place. Intermediate points on this band should be checked at 10 and 6 megacycles respectively and any departure from ganging or alignment should be found negligible because after tracking is accomplished on the broadcast band the inductors are held to such a standard that tracking, after alignment at 15 megacycles is achieved, should be very nearly perfect.

(Police Band)

The signal generator should be adjusted to 4 megacycles and the wave change switch adjusted to its middle position. The set should now be tuned in the vicinity of 4 megacycles and the signal centered until peak output obtains. The preselector trimmer which is the right hand adjustment of the two in the center of the front chassis skirt, should be adjusted until a peaked condition of the signal is shown by the output meter.

ALIGNMENT - MODEL 3J4

GANGING OF THE I.F. AMPLIFIER:

The signal generator should be adjusted to 175 kilocycles and its output connected directly (no dummy antenna being used) to the grid of the first detector tube, which is the first tube on the right hand side of the chassis when facing front of chassis. With this connection made and the volume control turned on, the output of the signal generator should be adjusted so that some medium value of output is obtained not to exceed 50 volts across the primary of the output transformer. The last intermediate frequency transformer should now be trimmed to resonance which is accomplished by trimming the adjustment on the left hand rear chassis skirt of the receiver when facing front of chassis. This adjustment should be peaked, being careful to always keep the output of the set so that it is below the above mentioned 50 volts across the primary of the output transformer. After peaking this adjustment, the secondary circuit of the first intermediate frequency transformer should be trimmed, which adjustment is the left hand adjustment on the first intermediate frequency transformer, which is that transformer on the rear right hand side of the chassis when facing front of chassis. After peaking this adjustment, the primary circuit of this transformer should be adjusted, which is the right hand adjustment on the transformer just referred to. After peaking the three intermediate frequency transformer adjustments in this manner, they should be again gone over and very carefully peaked.

GANGING OF OSCILLATOR AND PRESELECTOR CIRCUITS:

The frequency of the signal generator and the scale reading of the receiver should be adjusted to 1400 kilocycles. The output of the signal generator should now be adjusted for some medium value and the oscillator section of the variable condenser peaked, which adjustment is the rear adjustment on the variable condenser. While this peaking operation is progressing, the output reading should at no time exceed 50 volts. The two preselector circuits should now be adjusted, which adjustments are the center and front adjustments occurring on the variable condenser, for maximum amplitude, the same care being exercised in keeping the output voltage to a medium value as mentioned above.

GENERAL:

With this receiver, which is a battery receiver, care should be exercised in keeping all terminal voltages very close to specified values. The voltage to the tubes should now exceed two volts by more than 10%, for the tubes used in this receiver are particularly critical to this type of misuse.

©John F. Rider, Publisher

©John F. Rider, Publisher

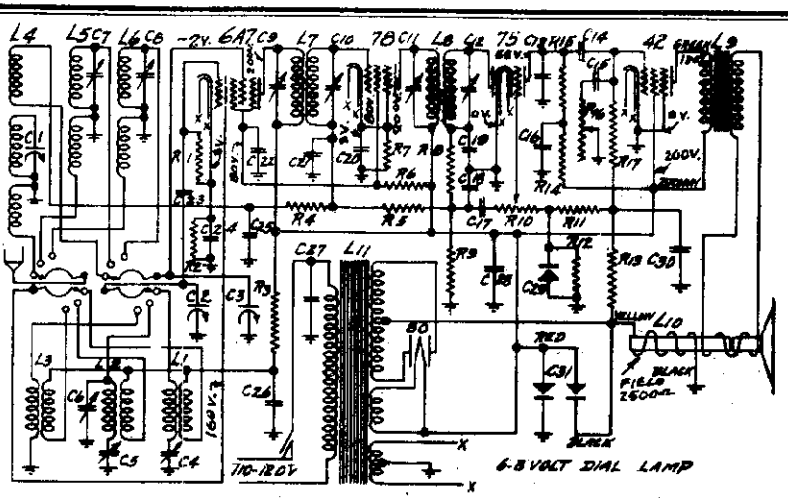

CONDENSERS

C1	77-1581	16-366	MMFD. Third Section of 3 Gang Condenser
C2	77-1581	16-366	MMFD. First Section of 3 Gang Condenser
C3	77-1581	16-366	MMFD. Second Section of 3 Gang Condenser
C4	76-1572	600	MMFD. Broadcast Oscillator Series Trimmer
C5	78-1572	1600	MMFD. Police Band Oscillator Series Trimmer
C6	78-1568	3-30	MMFD. Police Band Oscillator Parallel Trimmer
C7	78-1568	3-30	MMFD. Police Band Preselector Trimmer
C8	78-1568	3-30	MMFD. Foreign Band Preselector Trimmer
C9	78-2005	80	MMFD. First I.F. Primary Trimmer
C10	78-2005	80	MMFD. First I.F. Secondary Trimmer
C11	78-2005	80	MMFD. Second I.F. Primary Trimmer
C12	78-2005	80	MMFD. Second I.F. Secondary Trimmer
C13	75-265	.001	Mfd. Mica 75 Plate R.F. By-pass condenser
C14	75-2003	.01	Mfd. 400 Volt Audio Feed Condenser
C15	75-2005	.01	Mfd. 400 Volt Tone Control Condenser
C16	75-2007	.1	Mfd. 400 Volt 75 Plate Hum Condenser
C17	75-2005	.01	Mfd. 400 Volt Audio Feed Condenser
C18	76-2001	.0001	Mfd. Mica Diode Filter Condenser
C19	76-2001	.0001	Mfd. Mica Diode Filter Condenser
C20	75-2005	.1	Mfd. 200 Volt I.F. Cathode By-pass Condenser
C21	75-2005	.1	Mfd. 200 Volt A.V.C. Network By-pass Condenser
C22	75-2005	.1	Mfd. 200 Volt Screen By-pass Condenser
C23	76-2002	.00005	Mfd. Mica Oscillator Grid Condenser
C24	75-2005	.1	Mfd. 200 Volt 6A7 Cathode By-Pass Condenser
C25	75-2005	.1	Mfd. 200 Volt A.V.C. Network By-Pass Condenser
C26	75-2003	.01	Mfd. 400 Volt Oscillator Plate By-Pass Condenser
C27	75-2005	.01	Mfd. 400 Volt Line By-Pass Condenser
C28	75-2015	1.	Mfd. 400 Volt B Supply By-Pass Condenser
C29	18-926	25	Mfd. 25 Volt C. Bias Network By-Pass Condenser
C30	75-2008	.2	Mfd. 200 Volt C Bias Network By-Pass Condenser
C31	18-2002	4-4	Mfd. 450 Volt Dry Electrolytic Condenser

RESISTORS

R1	53-941	20,000	Ohm Oscillator Grid Resistor
R2	53-1062	250	Ohm Oscillator Cathode Resistor
R3	53-877	10,000	Ohm Oscillator Plate Resistor
R4	53-923	100,000	Ohm A.V.C. Network Resistor
R5	53-926	1 Meg	Ohm A.V.C. Network Resistor
R6	53-1042	20,000	Ohm R.F. & I.F. Screen Resistor
R7	53-1065	500	Ohm I.F. Cathode Resistor
R8	53-898	50,000	Ohm Diode Filter Resistor
R9	53-925	500,000	Ohm Dibde Load Resistor
R10	19-1891	500,000	Ohm Volume Control & Switch
R11	53-923	100,000	Ohm C Bias Network Resistor
R12	53-919	5,000	Ohm C Bias Network Resistor
R13	53-926	1 Meg	Ohm C Bias Network Resistor
R14	53-925	100,000	Ohm 75 Plate Hum Resistor
R15	53-924	250,000	Ohm 75 Plate Resistor
R16	19-1517	250,000	Ohm Tone Control
R17	53-925	500,000	Ohm 42 Grid Resistor

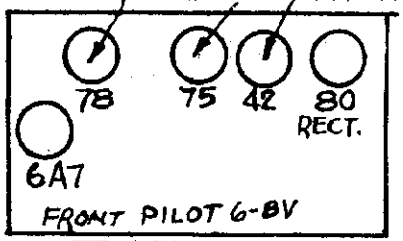

TUBE SOCKET LAYOUT
MODELS 5B5,5BC5

MODELS 5B5,5BC5 INTERMEDIATE FREQUENCY 456 K.C.

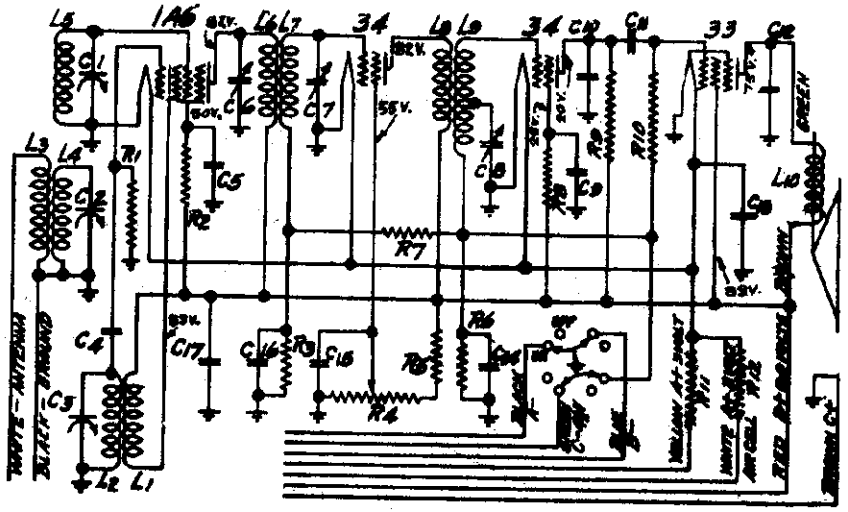

©John F. Rider, Publisher

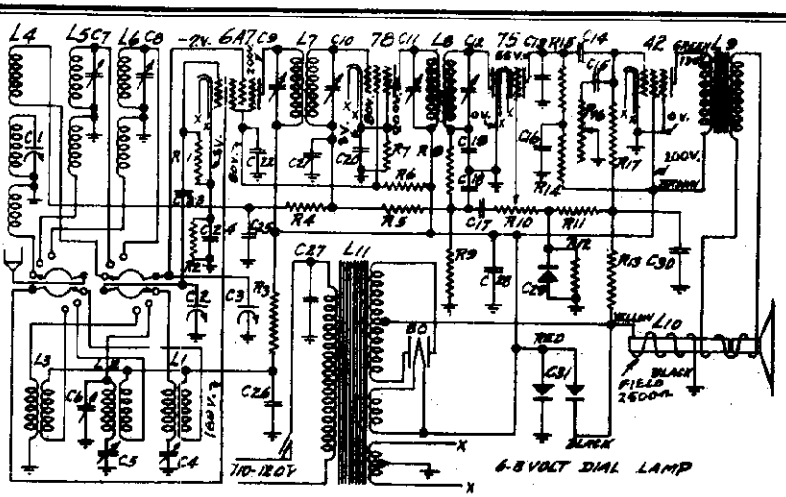

CONDENSERS

C1	77-1581	16-366	MMFD. Third Section of 3 Gang Condenser
C2	77-1581	16-366	MMFD. First Section of 3 Gang Condenser
C3	77-1581	16-366	MMFD. Second Section of 3 Gang Condenser
C4	78-1572	600	MMFD. Broadcast Oscillator Series Trimmer
C5	78-1572	1600	MMFD. Police Band Oscillator Series Trimmer
C6	78-1568	3-30	MMFD. Police Band Oscillator Parallel Trimmer
C7	78-1568	3-30	MMFD. Police Band Preselector Trimmer
C8	78-1568	3-30	MMFD. Foreign Band Preselector Trimmer
C9	78-2005	80	MMFD. First I.F. Primary Trimmer
C10	78-2005	80	MMFD. First I.F. Secondary Trimmer
C11	78-2005	80	MMFD. Second I.F. Primary Trimmer
C12	78-2005	80	MMFD. Second I.F. Secondary Trimmer
C13	75-265	.001	Mfd. Mica 75 Plate R.F. By-pass condenser
C14	75-2003	.01	Mfd. 400 Volt Audio Feed Condenser
C15	75-2003	.01	Mfd. 400 Volt Tone Control Condenser
C15	75-2007	.1	Mfd. 400 Volt 75 Plate Mum Condenser
C17	75-2003	.01	Mfd. 400 Volt Audio Feed Condenser
C18	76-2001	.0001	Mfd. Mica Diode Filter Condenser
C19	76-2001	.0001	Mfd. Mica Diode Filter Condenser
C20	75-2005	.1	Mfd. 200 Volt I.F. Cathode By-pass Condenser
C21	75-2005	.1	Mfd. 200 Volt A.V.C. Network By-pass Condenser
C22	75-2005	.1	Mfd. 200 Volt Screen By-pass Condenser
C23	76-2002	.00005	Mfd. Mica Oscillator Grid Condenser
C24	75-2005	.1	Mfd. 200 Volt 6A7 Cathode By-Pass Condenser
C25	75-2005	.1	Mfd. 200 Volt A.V.C. Network By-Pass Condenser
C26	75-2003	.01	Mfd. 400 Volt Oscillator Plate By-Pass Condenser
C27	75-2003	.01	Mfd. 400 Volt Line By-Pass Condenser
C28	75-2015	1.	Mfd. 400 Volt B Supply By-Pass Condenser
C29	18-926	25	Mfd. 25 Volt C. Bias Network By-Pass Condenser
C30	75-2006	.2	Mfd. 200 Volt C Bias Network By-Pass Condenser
C31	18-2002	4-4	Mfd. 450 Volt Dry Electrolytic Condenser

RESISTORS

R1	53-941	20,000	Ohm Oscillator Grid Resistor
R2	53-1062	250	Ohm Oscillator Cathode Resistor
R3	53-577	10,000	Ohm Oscillator Plate Resistor
R4	53-925	100,000	Ohm A.V.C. Network Resistor
R5	53-926	1	Meg Ohm A.V.C. Network Resistor
R6	53-1042	20,000	Ohm R.F. & I.F. Screen Resistor
R7	53-1065	500	Ohm I.F. Cathode Resistor
R8	53-898	50,000	Ohm Diode Filter Resistor
R9	53-925	500,000	Ohm Diode Load Resistor
R10	19-1291	500,000	Ohm Volume Control & Switch
R11	53-925	100,000	Ohm C Bias Network Resistor
R12	53-919	5,000	Ohm C Bias Network Resistor
R13	53-926	1	Meg Ohm C Bias Network Resistor
R14	53-923	100,000	Ohm 75 Plate Hum Resistor
R15	53-924	250,000	Ohm 75 Plate Resistor
R16	19-1317	850,000	Ohm Tone Control
R17	53-925	500,000	Ohm 42 Grid Resistor

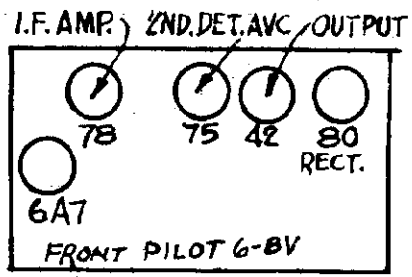

TUBE SOCKET LAYOUT
MODELS 5B5,5BC5

MODELS 5B5,5BC5 INTERMEDIATE FREQUENCY 456 K.C.

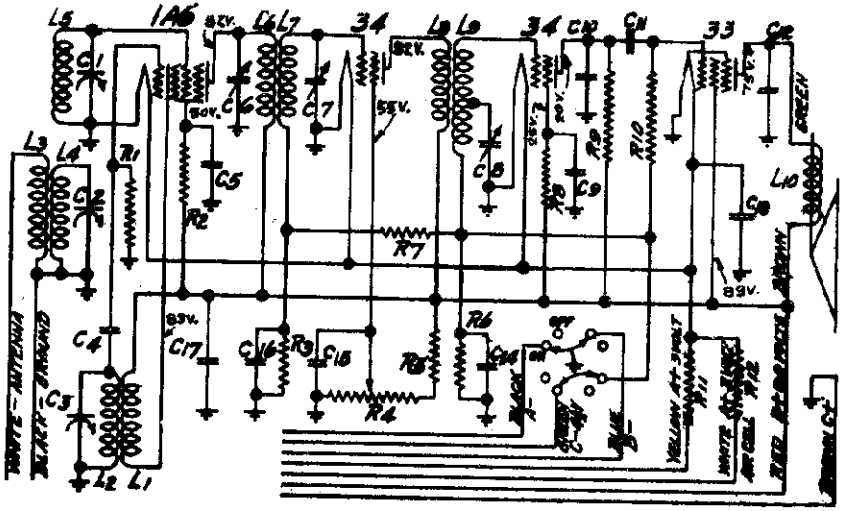

CODE	PART NO.		
			RESISTORS
R1	53-923	100,000	Ohm Resistor Oscillator Grid
R2	53-921	40,000	Ohm Resistor 1A6 Screen
R3	53-898	50,000	Ohm Resistor I.F. Grid Isolation
R4	19-1315	500,000	Ohm Volume Control
R5	53-1042	25,000	Ohm Resistor I.F. Screen
R6	53-1065	1,000	Ohm Resistor C Bias Network
R7	53-898	50,000	Ohm Resistor C Bias Network
R8	53-925	500,000	Ohm Resistor Second Detector Screen
R9	53-924	250,000	Ohm Resistor Second Detector Plate
R10	53-925	500,000	Ohm Resistor Output Grid
R11	53-2005	2.25	Ohm Resistor Filament Series
R12	53-2002	.4	Ohm Resistor Filament Series
			CONDENSERS
C1	77-833	366	MMFD. First Preselector Section of 3 Gang
C2	77-833	366	MMFD. Second Preselector Section of 3 Gang
C3	77-833	328	MMFD. Oscillator Section of 3 Gang
C4	76-2004	.00025	Mfd. Mica Oscillator Grid Condenser
C5	75-2005	.1	Mfd. 200 Volt 1A6 Screen By-Pass
C6	78-2008		First I.F. Primary Trimmer Condenser
C7	78-2011		First I.F. Secondary Trimmer Condenser
C8	78-2009		Second I.F. Trimmer Condenser
C9	75-2005	.1	Mfd. 200 Volt Second Detector Screen By-Pass
C10	76-662	.002	Mfd. Mica Second Detector Plate Filter
C11	75-2003	.01	Mfd. 400 Volt Audio Feed Condenser
C12	75-2002	.004	Mfd. 600 Volt Output Plate Filter
C13	75-2013	1.	Mfd. 400 Volt Filament By-Pass Condenser
C14	75-2005	.1	Mfd. 200 Volt C Bias Network By-Pass
C15	75-2005	.1	Mfd. 200 Volt I.F. Screen By-Pass Condenser
C16	75-2005	.1	Mfd. 200 Volt I.F. Grid Isolation By-Pass
C17	75-2005	.1	Mfd. 200 Volt B By-Pass Condenser

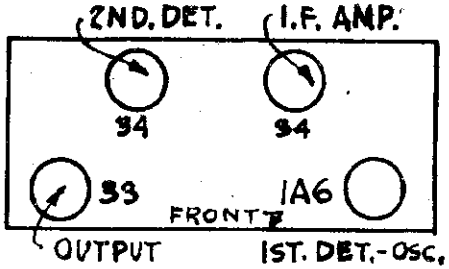

TUBE SOCKET LAYOUT
MODEL 3J4

MODEL 3J4 INTERMEDIATE FREQUENCY 175 K.C.

Schematics, Socket Parts

WILCOX-GAY CORP.

MODEL 5BA5
MODELS 5E8, 5E9

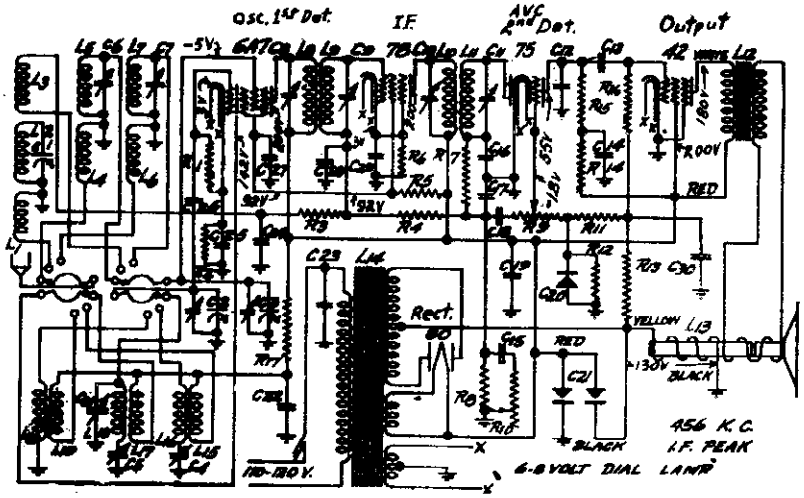

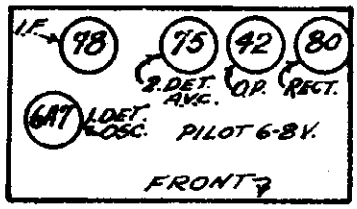

MODEL 5BA5

INDUCTANCES

L1	17-2031	Broadcast Preselector Primary
L2	17-2031	Broadcast Preselector First Second ary
L3	17-2031	Broadcast Preselector Second Secondary
L4	17-2051	Long Wave Band Preselector Primary
L5	17-2031	Long Wave Band Preselector Secondary
L6	17-2017	Foreign Band Preselector Primary
L7	17-2017	Foreign Band Preselector Secondary
L8	17-2016	First I.F. Primary
L9	17-2016	First I.F. Secondary
L10	17-2016	Second I.F. Primary
L11	17-2016	Second I.F. Secondary
L12	54-2008	Single 42 Output Transformer
L13	-2003	3500 Ohm Speaker Field

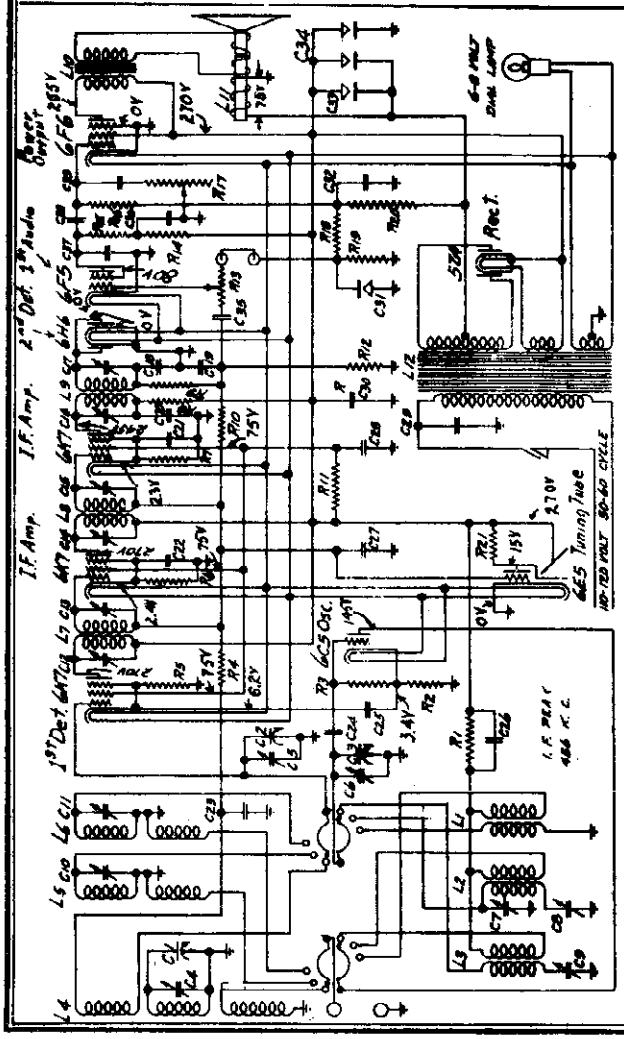

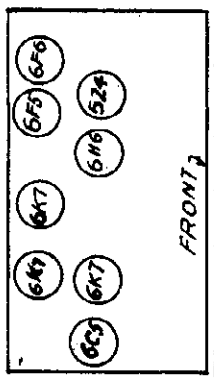

CODE	PART NO.		RESISTORS
R1	53-941	20,000	Ohm Oscillator Grid Resistor
R2	53-1068	250	Ohm Oscillator Cathode Resistor
R3	53-923	100,000	Ohm A.V.C. Network
R4	53-926	1	Megohm A.V.C. Network
R5	53-1048	25,000	Ohm Screen Feed
R6	53-1065	500	Ohm I.F. Cathode
R7	53-898	50,000	Ohm Diode Filter
R8	53-925	500,000	Ohm Diode Load
R9	19-1891	500,000	Ohm Volume Control & Switch
R10	19-1317	250,000	Ohm Tone Control
R11	53-925	100,000	Ohm C Bias Network
R12	53-919	5,000	Ohm C Bias Network
R13	53-926	1	Megohm C Bias Network
R14	53-923	100,000	Ohm 75 Plate Hum Resistor
R15	53-924	250,000	Ohm 75 Plate
R16	53-925	500,000	Ohm 42 Grid
R17	53-877	10,000	Ohm Oscillator Plate Resistor
			CONDENSERS
C1	77-1561	16-366	MMFD. Third Section of 3 Gang Condenser
C2	77-1561	16-366	MMFD. Oscillator Section of 3 Gang Condenser
C3	77-1561	16-366	MMFD. Second Section of 3 Gang Condenser
C4	78-1569	450	MMFD. Broadcast Oscillator Trimmer
C5	78-1569	140	MMFD. Long Wave Band Oscillator Trimmer
C6	78-1566	3-30	MMFD. Long Wave Band Preselector Trimmer
C7	78-1566	3-30	MMFD. Skip Band Preselector Trimmer
C8	78-2005	80	MMFD. First I.F. Primary Trimmer
C9	78-2005	80	MMFD. First I.F. Secondary Trimmer
C10	78-2005	80	MMFD. Second I.F. Primary Trimmer
C11	78-2005	80	MMFD. Second I.F. Secondary Trimmer
C12	76-255	.001	MFD. Mica Second Detector Plate
C13	75-269A	.01	MFD. 400 Volt Audio Feed Condenser
C14	75-1326A	.1	MFD. 400 Volt 75 Plate Hum Filter
C15	75-269A	.01	MFD. 400 Volt Tone Control Condenser
C16	76-559	.0001	MFD. Mica Diode Filter Net work
C17	76-559	.0001	MFD. Mica Diode Filter Net work
C18	75-269A	.01	MFD. 400 Volt Audio Feed Condenser
C19	75-265	1.	MFD. 400 Volt B. Supply By-Pass
C20	18-926	25	MFD. 25 Volt C Bias
C21	18-1274	4-4	MFD. 450 Volt Dry Electrolytic Condenser
C22	75-269A	.01	MFD. 400 Volt Oscillator Plate By-Pass
C23	75-269A	.01	MFD. 400 Volt 110 Volt Line By-Pass
C24	75-272A	.1	MFD. 200 Volt A.V.C. Network By-Pass
C25	75-272A	.1	MFD. 200 Volt 6A7 Cathode By-Pass
C26	76-264	.00005	MFD. Mica Oscillator Grid Condenser
C27	75-272A	.1	MFD. 200 Volt Screen By-Pass
C28	75-272A	.1	MFD. 200 Volt A.V.C. Network By-Pass
C29	75-272A	.1	MFD. 200 Volt 75 Cathode By-Pass
C30	75-165A	.2	MFD. 200 Volt C Bias Network By-Pass
C31	78-1566	3-30	MMFD. Long Wave Band Oscillator Trimmer

MODELS 5E8 & 5E9

(5E9 is 5E8 with Addition of Tuning Tube.)

©John F. Rider, Publisher

MODEL 5BE6
Schematic
Socket, Parts

WILCOX-GAY CORP.

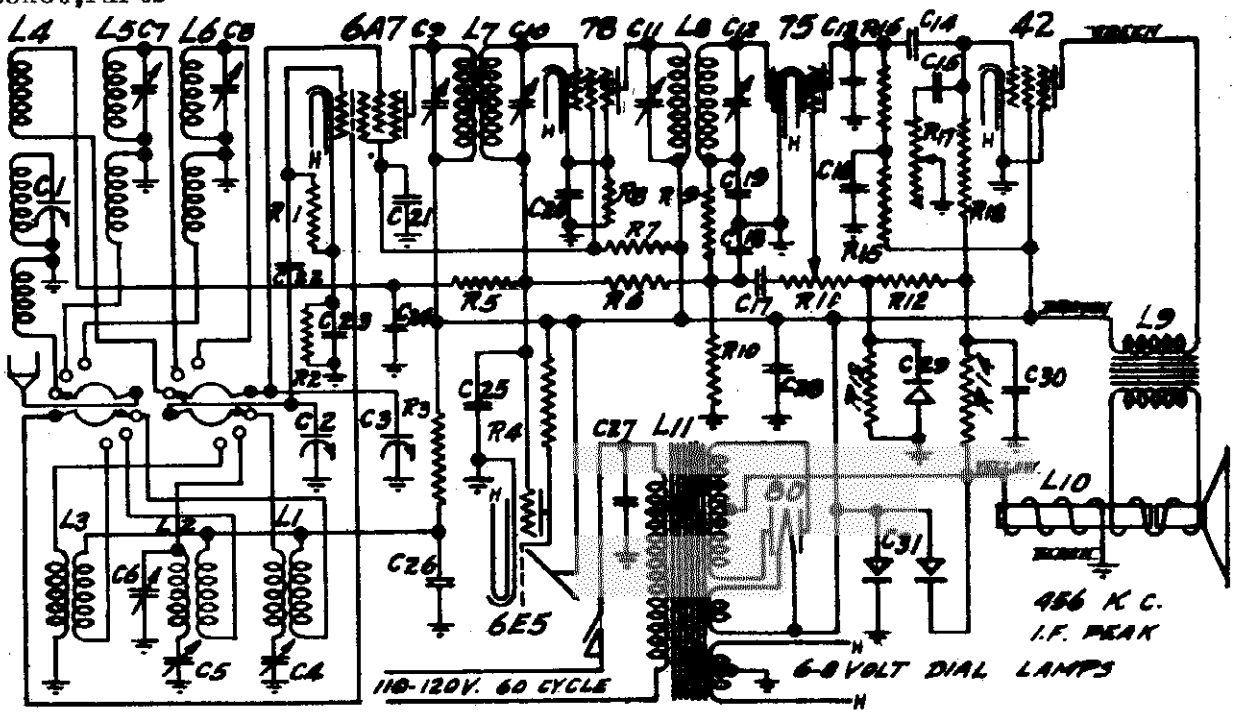

I.F. PEAK 456 K.C.

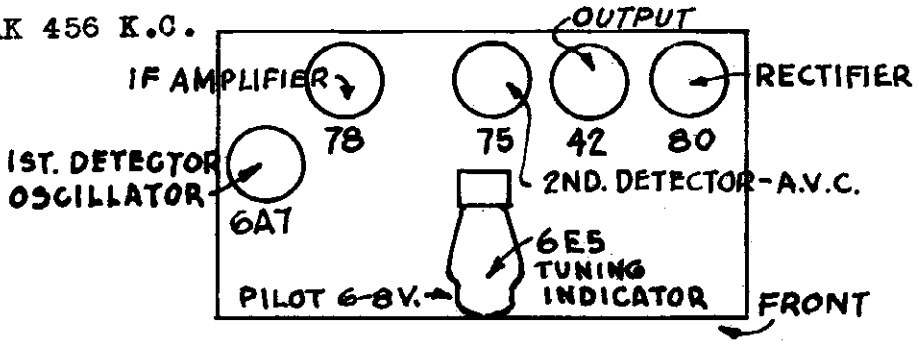

CONDENSERS

C1	77-1581	16-366 MMFD. Third Section of 3 Gang Condenser
C2	77-1581	16-366 MMFD. First Section of 3 Gang Condenser
C3	77-1581	16-366 MMFD. Second Section of 3 Gang Condenser
C4	78-1572	500 MMFD. Broadcast Oscillator Series Trimmer
C5	78-1572	1600 MMFD. Police Band Oscillator Series Trimmer
C6	78-1588	3-30 MMFD. Police Band Oscillator Parallel
C7	78-1588	3-30 MMFD. Police Band Preselector Trimmer
C8	78-1588	3-30 MMFD. Foreign Band Preselector Trimmer
C9	78-2006	80 MMFD. First I.F. Primary Trimmer
C10	78-2006	80 MMFD. First I.F. Secondary Trimmer
C11	78-2006	80 MMFD. Second I.F. Primary Trimmer
C12	78-2006	80 MMFD. Second I.F. Secondary Trimmer
C13	78-265	.001 Mfd. Mica 75 Plate R.F. By-Pass Condenser
C14	78-2006	.01 Mfd. 400 Volt Paper Audio Feed Condenser
C15	78-2006	.01 Mfd. 400 Volt Paper Tone Control Condenser
C16	78-2007	.1 Mfd. 400 Volt Paper 75 Plate Hum Condenser
C17	78-2006	.01 Mfd. 400 Volt Paper Audio Feed Condenser
C18	76-2001	.0001 Mfd. Mica Diode Filter Condenser
C19	76-2001	.0001 Mfd. Mica Diode Filter Condenser
C20	78-2006	.1 Mfd. 200 Volt Paper I.F. Cathode By-Pass Cond.
C21	78-2006	.1 Mfd. 200 Volt Paper Screen By-Pass Condenser
C22	76-2002	.00005 Mfd. Mica Oscillator Grid Condenser
C23	78-2006	.1 Mfd. 200 Volt Paper 6A7 Cathode By-Pass Cond.
C24	78-2006	.1 Mfd. 200 Volt Paper A.V.C. Network By-Pass Cond.
C25	78-2006	.1 Mfd. 200 Volt Paper A.V.C. Network By-Pass Cond.
C26	78-2006	.01 Mfd. 400 Volt Paper Oscillator Plate By-Pass Cond
C27	78-2006	.01 Mfd. 400 Volt Paper Line By-Pass Condenser
C28	78-2013	1. Mfd. 400 Volt Paper B Supply By-Pass Condenser
C29	18-928	25 Mfd. 25 Volt C Bias Network By-Pass Condenser
C30	78-2006	.2 Mfd. 200 Volt C Bias Network By-Pass Condenser
C31	18-2002	4-4 Mfd. 450 Volt Dry Electrolytic Condenser

RESISTORS

R1	55-941	20,000 Ohm Oscillator Grid Resistor
R2	53-1052	250 Ohm Oscillator Cathode Resistor
R3	53-277	10,000 Ohm Oscillator Plate Resistor
R4	53-926	1 Meg Ohm 6B6 Triode Grid Resistor
R5	53-923	100,000 Ohm A.V.C. Network Resistor
R6	53-926	1 Meg Ohm A.V.C. Network Resistor
R7	53-1042	20,000 Ohm R.F. & I.F. Screen Resistor
R8	53-1063	800 Ohm I.F. Cathode Resistor
R9	53-898	50,000 Ohm Diode Filter Resistor
R10	53-925	500,000 Ohm Diode Load Resistor
R11	19-1291	500,000 Ohm Volume Control & Switch
R12	53-923	100,000 Ohm C Bias Network Resistor
R13	53-920	10,000 Ohm C Bias Network Resistor
R14	53-926	1 Meg Ohm C Bias Network Resistor
R15	53-922	100,000 Ohm 75 Plate Hum Resistor
R16	53-924	250,000 Ohm 75 Plate Resistor
R17	19-1517	250,000 Ohm Tone Control
R18	53-925	500,000 Ohm 42 Grid Resistor

INDUCTANCES

L1	17-1646	Broadcast Oscillator Coil Assembly
L2	17-1667	Police Band Oscillator Coil Assem
L3	17-2018	Foreign Band Oscillator Coil Assem
L4	17-2020	Broadcast Preselector Coil Assem
L5	17-1668	Police Band Preselector Coil Assem
L6	17-2017	Foreign Band Preselector Coil Assem
L7	66-2007	First I.F. Trans. Assembly
L8	66-2008	Second I.F. Trans. Assembly
L9	64-2018	10" Speaker 42 Tube Output Transf
L10	64-2018	10" Speaker 2500 Ohm Field
L11	80-1068	Power Transformer (Unless Special)

©John F. Rider, Publisher

ZENITH RADIO CORP.

MODELS 4-B-106, 4-B-131
4-B-132
Chassis 5406
Schematic

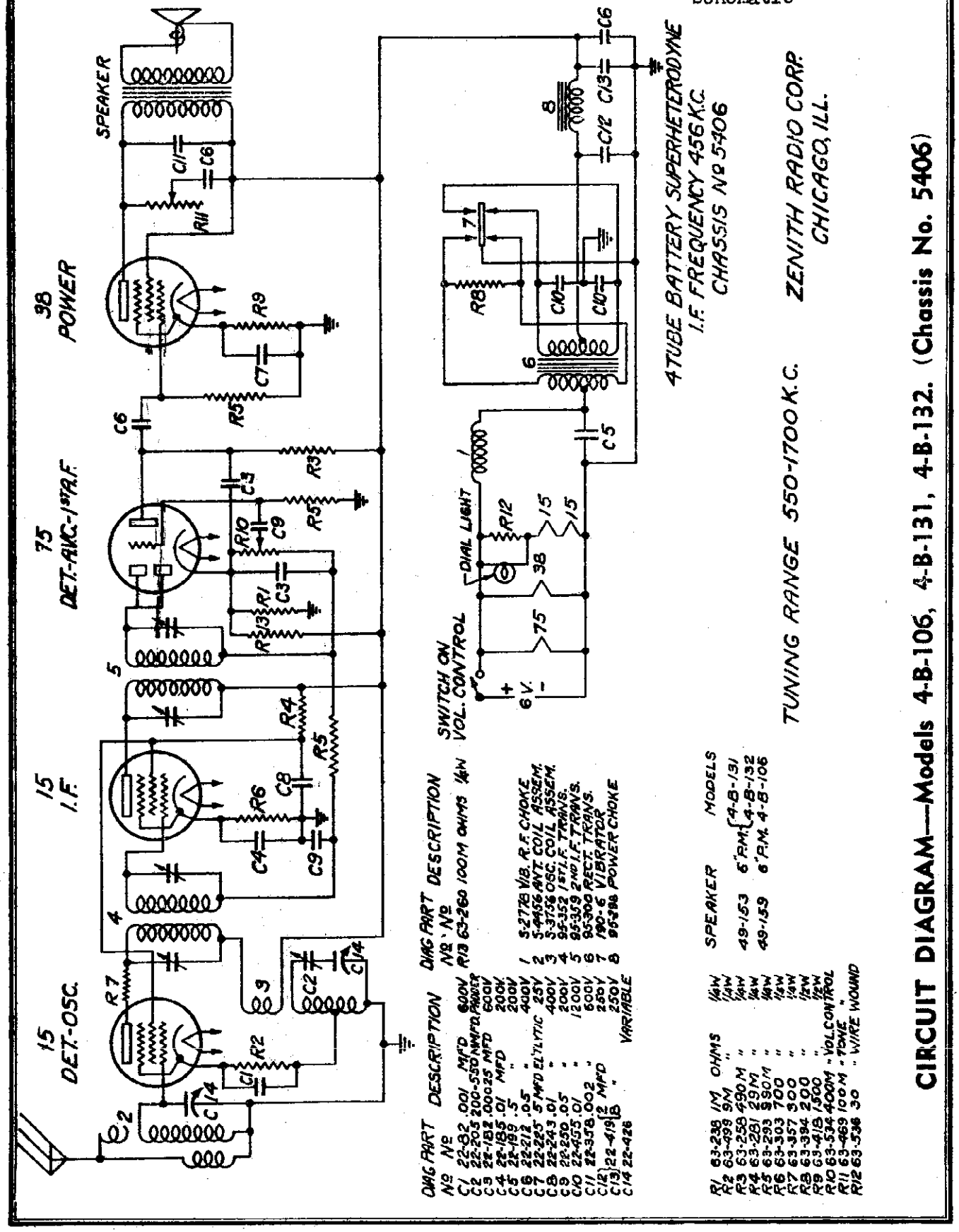

DIAG. No.	PART No.	DESCRIPTION
C1	22-82	.001 MFD 600V
C2	22-203	200-550 MMFD. PADER
C3	22-182	.00025 MFD 600V
C4	22-185	.01 MFD 200V
C5	22-199	.5 " 200V
C6	22-212	.05 " 400V
C7	22-225	.5 MFD ELYTIC 25V
C8	22-243	.01 " 400V
C9	22-250	.05 " 200V
C10	22-455	.01 " 1200V
C11	22-378	.002 " 600V
C12	22-419	2 MFD " 250V
C13		8 "
C14	22-426	VARIABLE

DIAG. No.	PART No.	DESCRIPTION
R1	63-260	100M OHMS 1/4W
1	5-2726	VIB. R.F. CHOKE
2	5-4456	ANT. COIL ASSEM.
3	5-3736	OSC. COIL ASSEM.
4	95-352	1ST I.F. TRANS.
5	95-359	2ND I.F. TRANS.
6	95-300	RECT. TRANS.
7	190-6	VIBRATOR
8	95-396	POWER CHOKE

R1	63-238	1M OHMS	1/4W	
R2	63-499	9M "	1/4W	
R3	63-258	490M "	1/4W	
R4	63-281	29M "	1/4W	
R5	63-293	980M "	1/4W	
R6	63-303	700 "	1/4W	
R7	63-357	300 "	1/2W	
R8	63-394	200 "	1/2W	
R9	63-418	1500 "	1/2W	
R10	63-534	400M "	VOL. CONTROL	
R11	63-469	100M "	TONE	
R12	63-536	30 "	WIRE WOUND	

	SPEAKER	MODELS
	49-153	6" P.M. 4-B-131, 4-B-132
	49-159	6" P.M. 4-B-106

©John F. Rider, Publisher

MODELS 4-B-106, 4-B-131
4-B-132
MODELS 5-S-119, 5-S-126

ZENITH RADIO CORP.

5-S-127, 5-S-150
5-S-151, 5-S-161
Voltage, Socket, Trimmers

MODELS
5-S-119, 5-S-126, 5-S-127, 5-S-150, 5-S-151, 5-S-161

CHASSIS No. 5516

SOCKET VOLTAGES

Tube	Position	1	2	3	4	5	6	7	8	9
6A8	1st Det. Osc.	0	0	240	85	-1	166	6ac	4	0
6K7	I. F.	0	0	240	85	3	—	6ac	3	0
6Q7	2nd Det. A.V.C.	0	0	75	.1	.1	—	6ac	1.5	0
6F6	Power	0	0	230	240	-5	—	6ac	0	—
5Y3 5W4	Rectifier	0	240	—	AC	—	AC	—	240	—

All voltages measured from point indicated to ground, using a 1000 ohm per volt meter with antenna and ground disconnected.

Line Voltage 112V.

Current Consumption 55 watts.

Power Output 3 watts.

For other data see index

TUBE POSITION

MODELS
4-B-106, 4-B-131, 4-B-132

CHASSIS No. 5406

SOCKET VOLTAGES

Tube	Position	Ef	Ek	Eg¹	Eg²	Eg³	Ep
15	1st Det. Osc.	2	8	0	115	—	155
15	I. F.	2	3.5	0	115	—	155
75	2nd Det. A.V.C.	6	1.5	0	—	—	30
38	PWR	6	14	0	155	—	148

f—filament; k—cathode; g¹—control grid; g²—screen grid; g³—suppressor grid; p—plate.

All measurements taken from point indicated to ground using a 1000 ohm per volt D. C. meter with antenna and ground disconnected.

Battery Voltage 6V.

Battery Drain 1.7 amperes.

Power Output 1 watt.

CAUTION: Reversal of the battery polarity will damage the filter condensers. The storage battery must be connected as shown above.

TUBE POSITION

©John F. Rider, Publisher

ZENITH RADIO CORP.

MODEL 5-M-90
Chassis 5510
Schematic,Partr

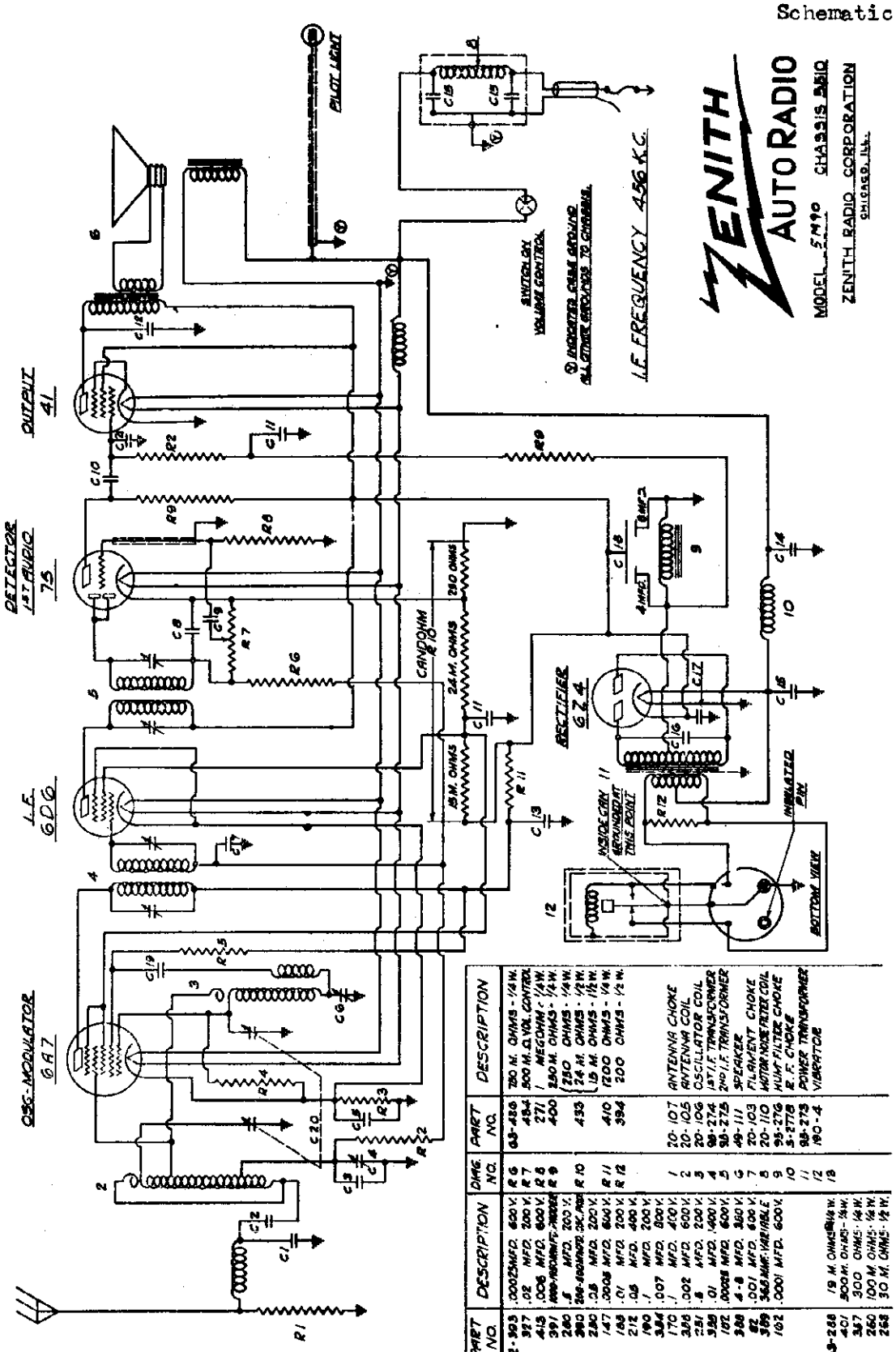

CHAS. NO.	PART NO.	DESCRIPTION
C 1	22-303	.0002 MFD. 600 V.
C 2	327	.02 MFD. 200 V.
C 3	415	.005 MFD. 600 V.
C 4	391	MIN-RICOHMITE RESIST
C 5	280	.1 MFD. 200 V.
C 6	390	250 MMFD. MICA
C 7	230	.05 MFD. 200 V.
C 8	147	.0002 MFD. 600 V.
C 9	188	.01 MFD. 200 V.
C 10	212	.05 MFD. 400 V.
C 11	190	.1 MFD. 200 V.
C 12	384	.007 MFD. 800 V.
C 13	170	.1 MFD. 400 V.
C 14	356	.002 MFD. 600 V.
C 15	251	.1 MFD. 200 V.
C 16	358	.01 MFD. 1400 V.
C 17	102	.0005 MFD. 600 V.
C 18	388	4-8 MFD. 350 V.
C 19	82	.001 MFD. 600 V.
C 20	359	365 MMF. VARIABLE
C 21	102	.0001 MFD. 600 V.
R 1	63-258	18 M. OHMS 1/4 W.
R 2	401	500 M. OHMS - 1/4 W.
R 3	347	300 OHMS 1/4 W.
R 4	260	100 M. OHMS 1/4 W.
R 5	258	30 M. OHMS - 1/2 W.

CHAS. NO.	PART NO.	DESCRIPTION
R 6	63-436	750 M. OHMS - 1/4 W.
R 7	434	500 M. Ω VOL. CONTROL
R 8	271	1 MEGOHM - 1/4 W.
R 9	400	250 M. OHMS - 1/4 W.
R 10	433	250 OHMS - 1/4 W.
		24 M. OHMS - 1/2 W.
		15 M. OHMS - 1/2 W.
R 11	410	1200 OHMS - 1/4 W.
R 12	394	200 OHMS - 1/2 W.
1	20-107	ANTENNA CHOKE
2	20-105	ANTENNA COIL
3	20-106	OSCILLATOR COIL
4	98-274	1ST I.F. TRANSFORMER
5	98-275	2ND I.F. TRANSFORMER
6	49-111	SPEAKER
7	20-103	FILAMENT CHOKE
8	20-110	MOTOR NOISE FILTER COIL
9	95-276	HUM FILTER CHOKE
10	5-2778	R. F. CHOKE
11	98-273	POWER TRANSFORMER
12	190-4	VIBRATOR
13		

©John F. Rider, Publisher

MODEL 5-M-90
Voltage, Socket
Trimmers, Alignment

ZENITH RADIO CORP.

MODELS 6-M-90,
6-M-91, 6-M-92
Alignment

ALIGNMENT

Every Zenith receiver is balanced, and the sensitivity measured on accurate crystal controlled signal generators before leaving the factory, and unless a part is changed, or the receiver otherwise altered, the adjustment should not be tampered with.

When alignment is thus required, an accurately calibrated service oscillator and output meter are essential.

The proper procedure is as follows:

MODEL 5M90

"A" Connect the service oscillator output leads to the control grid of the 6A7 tube, and to the chassis. If the oscillator output is a single shielded lead the shield should connect to the chassis.

Connect the output meter across the primary of the speaker transformer.

Set the service oscillator at 456 K.C., and adjust the trimmers on the I F transformers to the point giving the greatest reading on the output meter. These, as well as the following adjustments should be made using as small an output from the signal generator as possible so that the A.V.C. action will be least effective.

"B" Change the service oscillator connection from the grid of the 6A7 to the antenna wire, leaving the other lead attached to the chassis.

Set the service oscillator at 1500 K.C. and rotate the gang condenser until the plates are entirely out of mesh. Adjust the oscillator section trimmer until the 1400 K.C. signal is tuned in.

Change the service oscillator to 1400 K.C. Rotate the gang condenser until this signal is tuned in, and then adjust the ANTENNA trimmer on the gang condenser to the point given the greatest output reading.

"C" Set the service oscillator to 600 K.C., and rock the gang condenser slowly to and fro past the point where this signal is received, meanwhile adjusting the padder condenser for a setting which gives the greatest output reading.

"D" Repeat operation "B".

"E" Reset the service oscillator to 456 K.C., leaving it connected to antenna, and adjust the wave trap trimmer to the point giving the MINIMUM output reading.

MODELS 6-M-90, 6-M-91, 6-M-92

"A" Connect the service oscillator to the control grid of the 6A8 tube and the chassis.

Connect the output meter across the primary of the speaker transformer.

Set the service oscillator to 262.5 K.C., and adjust the trimmers on the I. F. transformers for the greatest output reading. These adjustments should be repeated several times using as weak an input signal as possible so as to obtain greater accuracy.

"B" Change the service oscillator lead from the grid of the 6A8 to the antenna connection. A male Delco Remy connector may be used in making a connection to the antenna lead.

Set the service oscillator at 1400 K.C.

Rotate the gang condenser one and one fourth turns from the minimum setting. At the proper position eight teeth on the tuning gear will be visible past the gear bracket.

Adjust the oscillator, R.F. and antenna trimmers in that order to the point giving the greatest output.

"C" Set the service oscillator at 600 K.C. and rotate the gang condenser to tune in this signal. Move the gang condenser to and fro past the signal meanwhile adjusting the oscillator padder condenser until the combination of adjustments giving the greatest reading of the output meter is obtained.

"D" Repeat operation "B."

For other data see index

SOCKET VOLTAGES 5-M-90

Tube	Position	Ef	Eb	Eg1	Eg2	Eg3	Ep
6A7	1st Det.	5.0	4	0	97	—	208
	Osc.			0	—	—	178
6D6	I. F.	5.0	4	0	97	4	217
76	2nd Det. A. V. C. 1st Audio	5.0	1.1	0	—	—	180
41	PWR.	5.0	0	−18	225	—	215
6Z4	RECT.	5.0	—	225	—	—	—

Line Voltage —6V.

Ef—heaters; Eb—cathode; Eg1—control grid; Eg2—screen grid; Eg3—suppressor grid; Ep—plate.

All measurements taken from point indicated to ground, using a 1000 ohm per volt. D. C. meter.

Tube Position. 5-M-90

©John F. Rider, Publisher

ZENITH RADIO CORP.

MODELS 5-S-29, 5-S-56
Chassis 5513, 5513A
Schematic, Socket
Trimmers, Parts

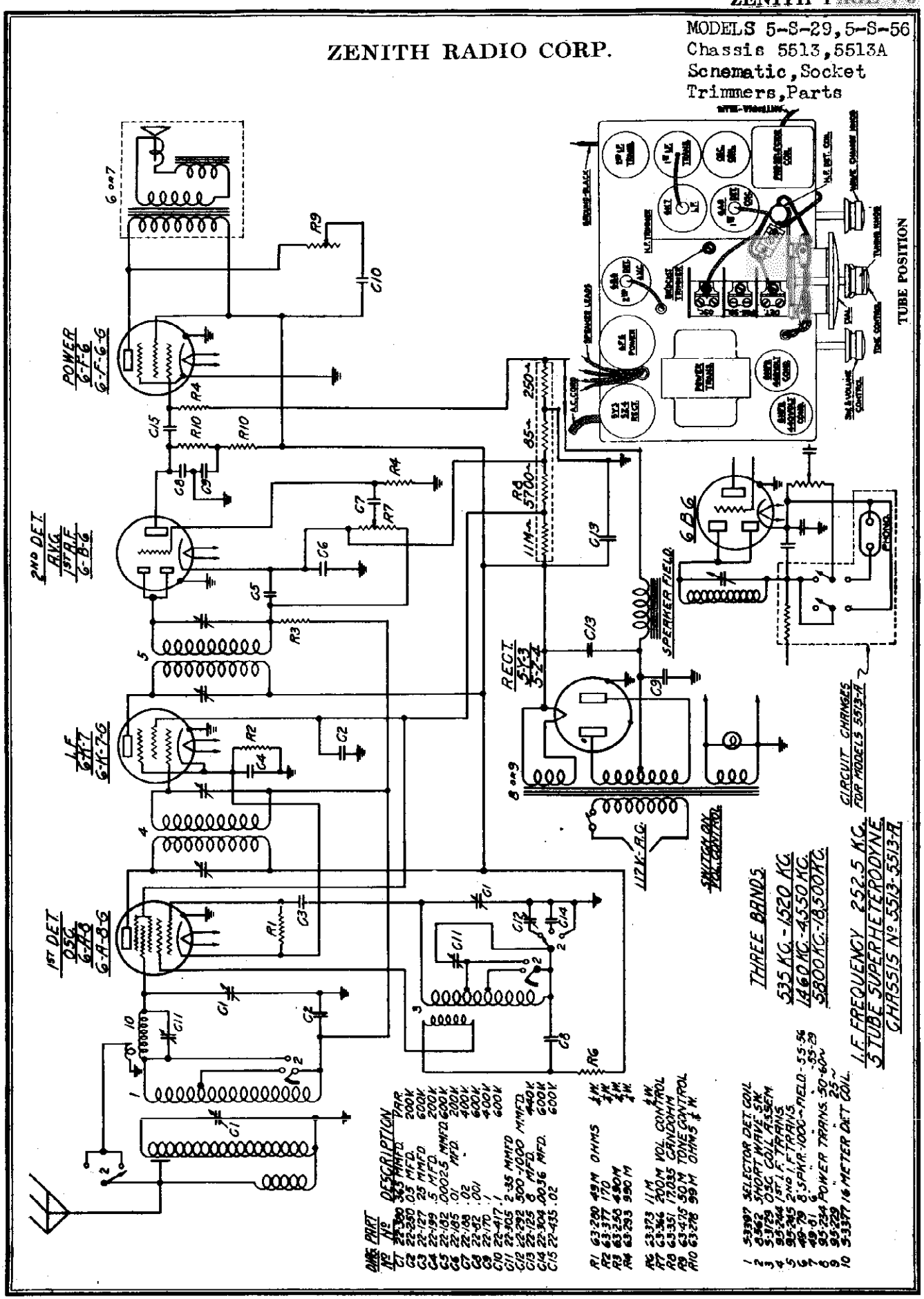

ONE PART No.	PART No.	DESCRIPTION
C1	23-200	365 MMFD. VAR.
C2	22-250	.05 MFD. 200V
C3	22-127	25 MMFD 600V
C4	22-199	.5 MFD 200V
C5	22-182	.00025 MFD 600V
C6	22-185	.01 MFD. 200V
C7	22-188	.02 400V
C8	22-192	.001 400V
C9	22-170	.1 400V
C10	22-417	.1
C11	22-305	2-35 MMFD
C12	22-293	500-1000 MMFD 400V
C13	22-125	.05 MFD. 600V
C14	22-304	.0056 MFD. 600V
C15	22-435	.02
R1	63-200	45M OHMS 1W
R2	63-377	170 1W
R3	63-250	450M 1W
R4	63-253	950M 1W
R5	63-373	1M 1W
R6	63-364	500M VOL. CONTROL
R7	63-351	17,035 OHMS
R8	63-435	50M TONE CONTROL
R9	63-278	99M OHMS 1/2 W.
R10	63-276	
1	53397	SELECTOR DET. COIL
2	3462	SHORT WAVE S.W.
3	53129	OSC. COIL ASSEM.
4	95-345	1ST I.F. TRANS.
5	95-345	2ND I.F. TRANS.
6	46-79	6.5 PWR. 1000~ FIELD - 55-56
7	46-61	5 PWR. 60~ FIELD - 55-29
8	95-234	POWER TRANS. 50-60~
9	95-229	25~
10	53377	16 METER ANT. COIL

©John F. Rider, Publisher

MODELS 5-S-56
MODELS 663, 664
Voltage, Alignment

ZENITH RADIO CORP.

SOCKET VOLTAGES FOR MODELS 663, 664, Chassis #5510

TUBE	POSITION	Ef	Ek	Eg1	Eg2	Eg3	Ep
6A7	1st Det.	5.8	4	0	97	-	205
	Osc.			0	-	-	175
6B6	I. F.	5.8	4	0	97	4	217
75	2nd Det. A. V. C. 1st Audio	5.8	1.1	0	-	-	160
41	PWR.	5.8	0	-15	225	-	215
5Z4	RECT.	5.8		235	-	-	-

Line Voltage 6 Volts. All measurements taken with a 1000 ohm per volt meter.

ALIGNMENT MODELS 663, 664, Chassis #5510

(1) Balance I. F. transformers at 456 K. C. with signal generator connected to grid of 6A7 and ground.
(2) Connect signal generator to antenna and ground. Adjust oscillator trimmer on gang for correct dial reading at 1400 K.C. Adjust detector trimmer for greatest output.
(3) Adjust oscillator padder while rocking pointer forward and backward past 600 K.C. to combination giving greatest output.
(4) Realign 1400 K.C. trimmers on gang.
(5) Set signal generator at 456 K.C. and gang at 600 K.C. Adjust wave trap trimmer for minimum signal. For other data see index

SOCKET VOLTAGES FOR MODELS 5-S-29, 5-S-56, Chassis #5513, #5513-A

TUBE	POSITION	1	2	3	4	5	6	7	8	9
6A8	1st Det. Osc.	0	5.8_{ac}	260	80	-.1	210	0	4	0
6K7	I. F.	0	5.8_{ac}	260	80	0	-	0	5.2	0
6B6	2nd Det. A.V.C.	0	5.8_{ac}	135	0	0	-	0	1.5	0
6F6	PWR	0	5.8_{ac}	240	260	-.7	-	0	0	-
5Y3	Rect.	0	260	-	270_{ac}	-	270_{ac}	-	260	-

Line Voltage 110 Volts. All measurements taken with a 1000 ohm per volt meter.

ALIGNMENT MODELS 5-S-29, 5-S-56, Chassis #5513, #5513-A

Alignment

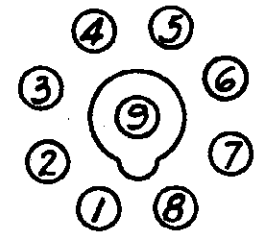

BOTTOM VIEW OF SOCKET

1. Balance I.F. transformers at 252.5 K.C. with test oscillator connected to control grid of 6A8 and ground.
2. Turn band switch to C band. Connect test oscillator to antenna and ground leads. Set test oscillator at 15 Megacycles. Adjust oscillator trimmer on gang condenser for correct dial reading.
3. Adjust detector trimmer (located on top of chassis between front section of gang condenser and coil) for maximum output.
4. Turn band switch to A band. Adjust oscillator trimmer (located on right side underneath chassis) for correct dial reading at 1400 K.C. also adjust preselector and detector trimmers on gang for maximum output.
5. Adjust oscillator padder (next to oscillator section of gang on top of chassis) while rocking pointer back and forth past 600 K.C. to the combination giving greatest output.
6. Recheck 1400 K.C.
7. Repeat entire procedure.

Chassis 5516
Schematic, Parts

MODELS 5-S-119, 5-S-126
5-S-127, 5-S-150
5-S-151, 5-S-161

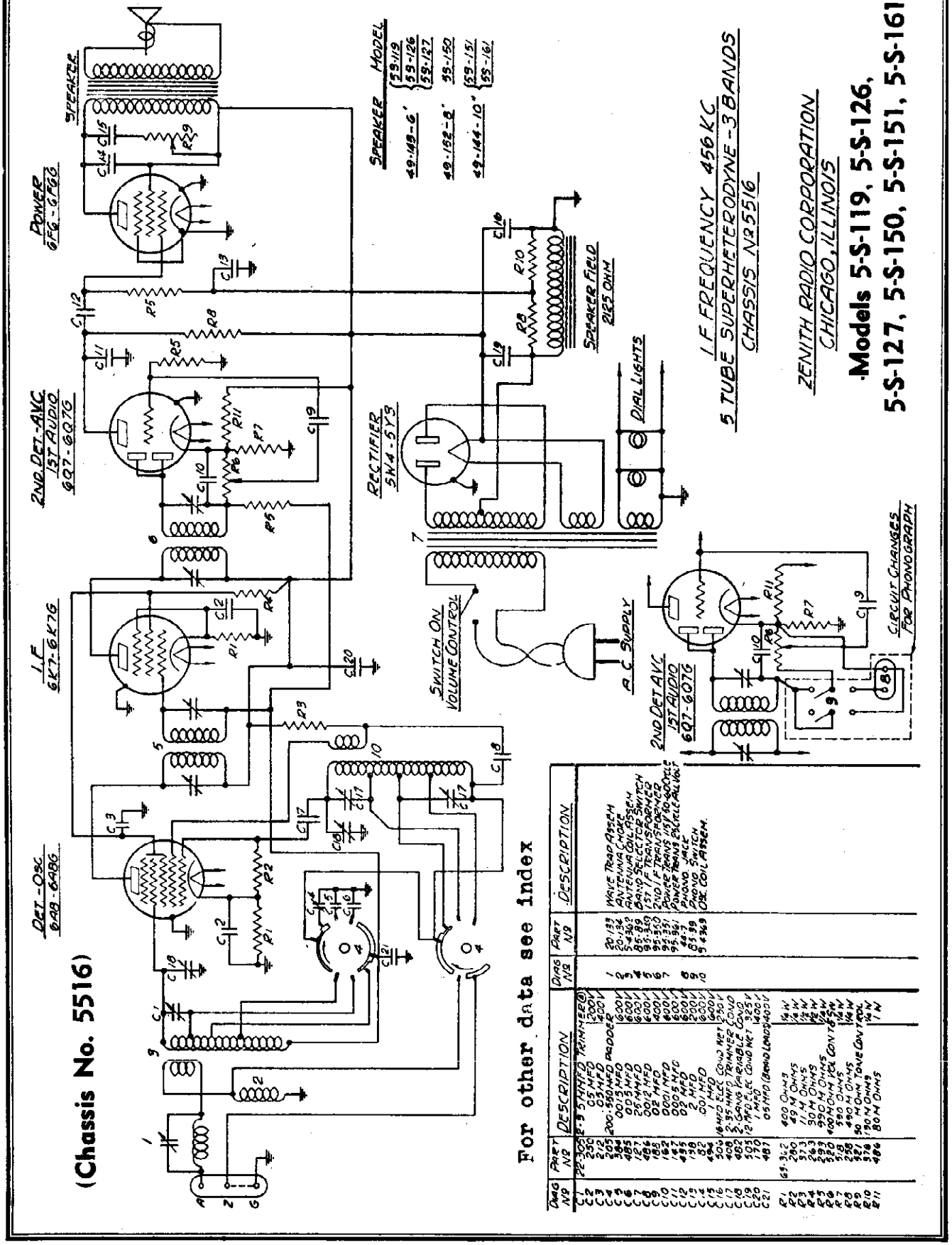

For other data see index

DWG N°	PART N°	DESCRIPTION	DWG N°	PART N°	DESCRIPTION
C1	22-305	2-9 STMFD TRIMMER@ 200V	1	20-133	WAVE TRAP ASSEM.
C2	230	.05 MFD 200V	2	20-134	ANTENNA CHOKE
C3	212	.05 MFD	3	54-382	ANTENNA COIL ASSEM.
C4	205	200-550 MMFD PADDER 400V	4	95-319	BAND SELECTOR SWITCH
C5	484	.0015 MFD 600V	5	95-320	2ND I.F. TRANSFORMER
C6	485	.005 MFD 600V	6	95-321	1ST I.F. TRANSFORMER
C7	486	.01 MFD 600V	7	95-331	POWER TRANS. 117V 50-60 CYCLE
C8	192	.02 MFD 600V		95-332	POWER TRANS. 105-125 VOLT 25 CYCLE
C9	487	.02 MFD 600V	8	44-7	PHONO JACK
C10	455	.0005 MFD 600V	9	53-39	PHONO SWITCH
C11	197	.02 MFD 600V	10	95-329	OSC. COIL ASSEM.
C12	138	.2 MFD 200V			
C13	82	.001 MFD 600V			
C14	494	1 MFD 600V			
C15	506	10 MFD ELEC COND NET 250V			
C16	508	3-35 MMFD TRIMMER COND			
C17	482	2 GANG VARIABLE COND			
C18	505	12 MFD ELEC COND NET 325V			
C19	507	25 MFD ELEC COND NET 450V			
C20	481	.05 MFD (BEING LOADED) 400V			
C21					
R1	61-342	400 OHMS	1/4 W		
R2	280	49 M OHMS	1/2 W		
R3	373	11 M OHMS	1/2 W		
R4	293	30 M OHMS	1/2 W		
R5	520	990 M OHMS	1/2 W		
R6	518	400 M OHM VOL CONTROL	1/4 W		
R7	258	390 OHMS	1/4 W		
R8	521	490 M OHMS	1/4 W		
R9	516	150 M OHM TONE CONTROL	1/4 W		
R10	519	80 M OHMS	1 W		
R11	486	804 OHMS			

©John F. Rider, Publisher

MODELS 6-B-107, 6-B-129
6-B-164
Chassis 5635
Schematic, Parts

ZENITH RADIO CORP.

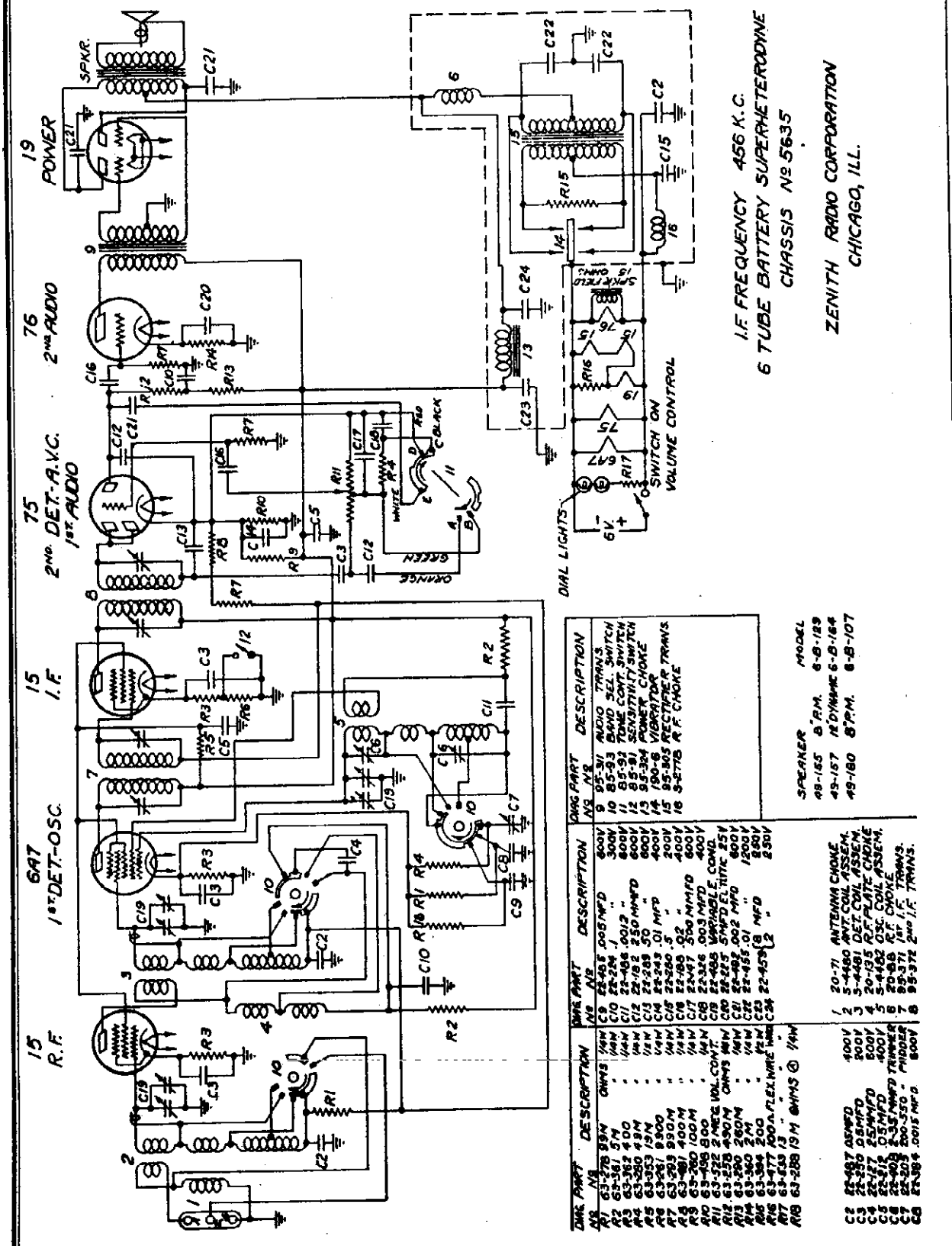

DWG. PART No.	DESCRIPTION	DWG. PART No.	DESCRIPTION
R1 63-278	33M	C9	22-405 .005 MFD 600V
R2 63-381	5M	C10	22-224 .1 " 300V
R3 63-362	400	C11	22-406 .002 " 600V
R4 63-350	49M	C12	22-182 250 MMFD 600V
R5 63-353	19M	C13	22-289 .50 " 600V
R6 63-351	9900	C14	22-243 .01 MFD 400V
R7 63-393	990M	C15	22-280 .5 " 200V
R8 63-383	400M	C16	22-199 .02 " 400V
R9 63-380	100M	C17	22-197 .350 MMFD 600V
R10 63-406	800	C18	22-326 .003 MFD 400V
R11 63-322	2 MEG VOL. CONT.	C19	22-486 VARIABLE COND.
R12 63-258	490M	C20	22-225 .5 MFD ELECTRIC 25V
R13 63-390	260M	C21	22-493 .002 MFD 600V
R14 63-360	2M	C22	22-495 .01 " 1200V
R15 63-394	200	C23	22-453 .8 " 600V
R16 63-477	100 A. FLEX. WIRE WND.	C24	.2 " 250V
R17 63-133	13 " " @ 1/4W
R18 63-288	19M @ 1/4W

DWG. PART No.	DESCRIPTION
1	20-71 ANTENNA CHOKE
2	5-4480 ANT. COIL ASSEM.
3	5-4481 DET. COIL ASSEM.
4	20-135 R.F. PLATE CHOKE
5	5-4482 OSC. COIL ASSEM.
6	20-98 R.F. CHOKE
7	85-371 1ST I.F. TRANS.
8	85-372 2ND I.F. TRANS.

DWG. PART No.	DESCRIPTION
C1	22-487 .05 MFD 400V
C2	22-230 .05 MFD 200V
C3	22-127 .25 MFD 600V
C4	22-512 .05 MFD 400V
C5	22-402 2-35 MMFD TRIMMER
C6	22-203 250-350 " PADDER
C7	22-384 .0015 MFD 600V

DWG. PART No.	DESCRIPTION
9	95-311 AUDIO TRANS.
10	85-93 BAND SEL. SWITCH
11	85-92 TONE CONT. SWITCH
12	85-91 SENSITIVITY SWITCH
13	95-324 POWER CHOKE
14	190-6 VIBRATOR
15	95-305 RECTIFIER TRANS.
16	3-2718 R.F. CHOKE

SPEAKER		MODEL
49-165	8" P.M.	6-B-129
49-157	12" DYNAMIC	6-B-164
49-180	8" P.M.	6-B-107

©John F. Rider, Publisher

©John F. Rider, Publisher

MODELS 6-B-107, 6-B-129
6-B-164
Chassis 5635
MODELS 6-S-128, 6-S-137
Voltage, Socket, Trimmers

6-S-147, 6-S-152
6-S-157
Chassis 5634

MODELS
6-B-107, 6-B-129, 6-B-164
CHASSIS No. 5635

SOCKET VOLTAGES

Tube	Position	Ef	Eg	Eg¹	Eg²	Eg³	Ep
15	R. F.	2	1.5	0	65	—	115
6A7	Det. Osc.	6	2.5	0 -5	75 —	— —	115 135
15	I. F.	2	3.5	0	75	—	130
75	2nd Det. A.V.C.	6	1.2	0	—	—	35
76	1st Audio	-6	6		—	—	125

f—filament; k—cathode; g¹—control grid; g²—screen grid; g³—suppressor grid; p—plate.

All voltages measured from socket contacts to ground with 1000 ohm per volt D. C. meter. Antenna and ground disconnected.
Battery Voltage 6V.
Battery Drain 2.2 amperes.
Power Output 2 watts.

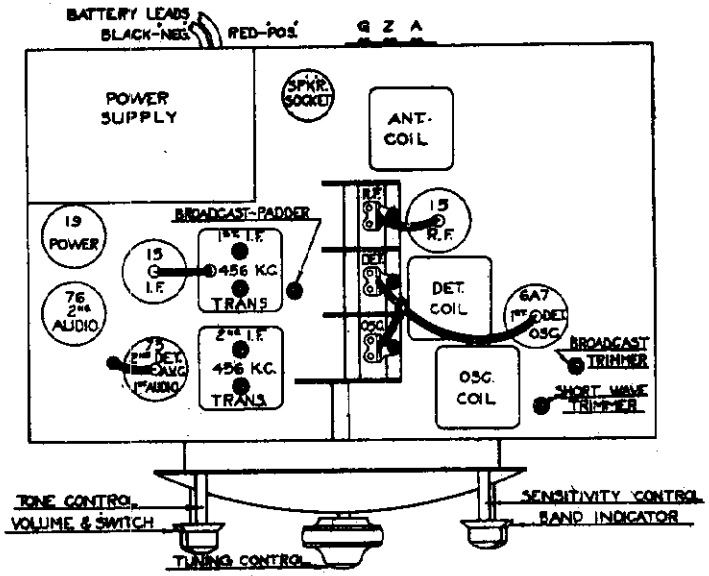

TUBE POSITION

CAUTION: Reversal of the battery polarity will damage the filter condensers. The storage battery must be connected as shown above.
NOTE: See bottom page 18 for details of antenna connector strip.

MODELS
6-S-128, 6-S-137, 6-S-147, 6-S-152, 6-S-157
CHASSIS No. 5634

SOCKET VOLTAGES

Tube	Position	1	2	3	4	5	6	7	8	9
6A8	1st Det Osc.	0	6AC	280	80	-4	175	0	0	0
6K7	I F	0	6AC	280	80	0	—	0	Local 7	0
6H6	2nd Det A.V.C.	0	6AC	—2	—2	-2	—	0	—2	—
6F5	1st Audio	0	6AC	—	75	—	—	0	—2	—2
6F6	Power	0	6AC	260	280	-2	—	0	—2	—
5Y3 5W4	Rectifier	0	320	—	AC	—	AC	—	320	—

All voltages measured from point indicated to ground, using a 1000 ohm per volt meter. Antenna and ground disconnected.
Line Voltage 112V.
Current Consumption 75 watts.
Power Output 4 watts.
For other data see index

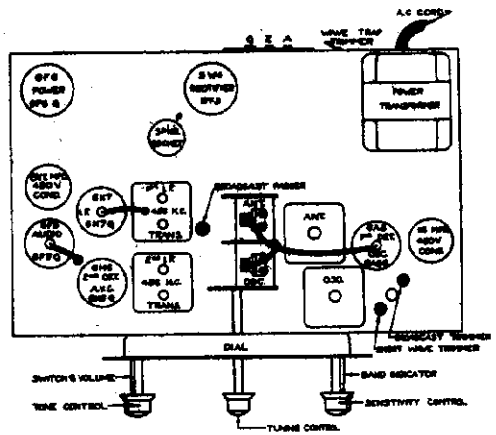

TUBE POSITION

NOTE: See bottom page 18 for details of antenna connector strip.

MODELS 6-D-116, 6-D-117
6-D-118
Chassis 5633
Schematic, Parts

ZENITH RADIO CORP.

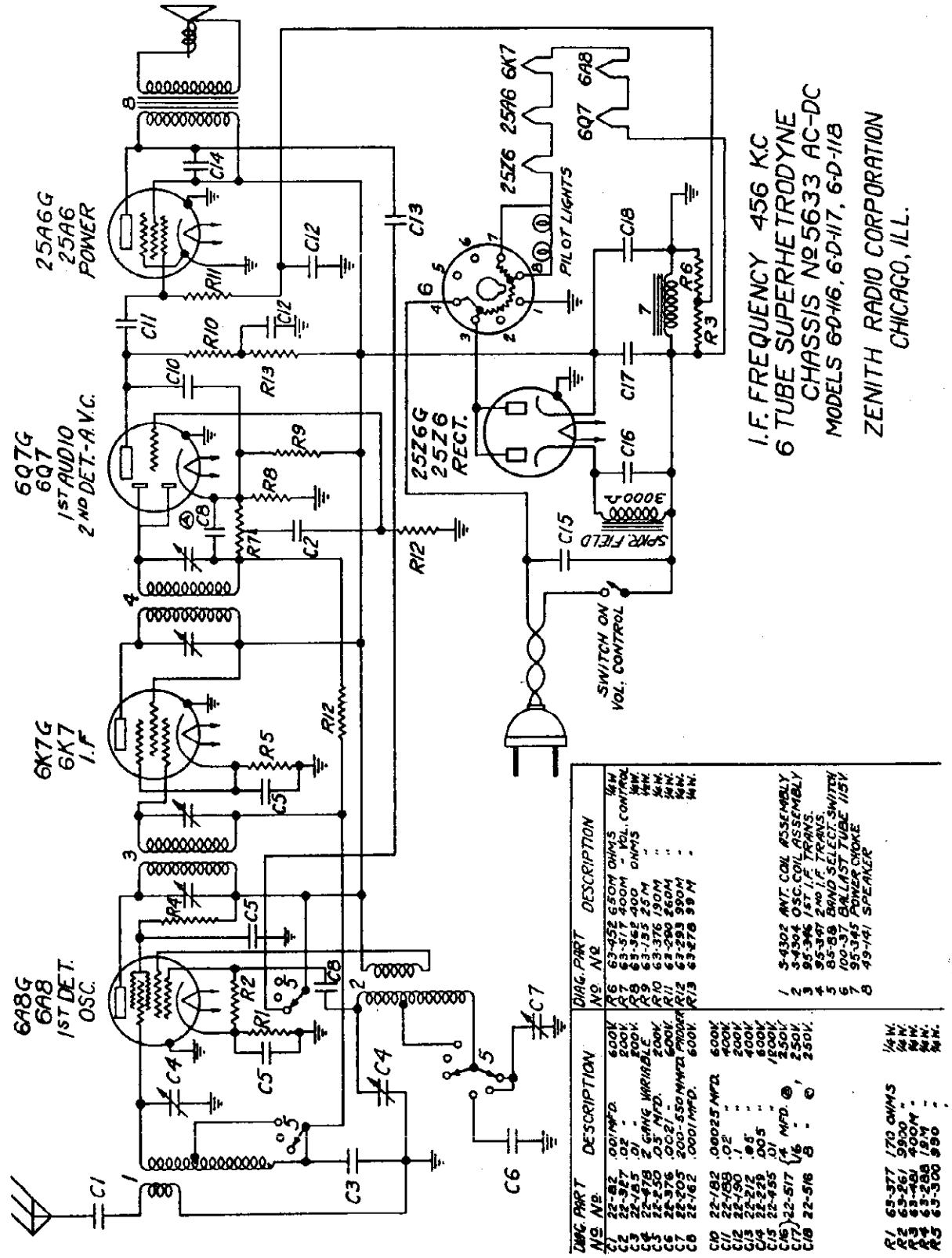

DIAG. No.	PART No.	DESCRIPTION	
C1	22-182	.001 MFD.	600V
C2	22-327	.02 "	200V.
C3	22-185	.01 "	200V.
C4	22-478	2 GANG VARIABLE	200V
C5	22-250	.05 MFD.	200V
C6	22-376	.0027 "	600V
C7	22-205	200-550 MMFD.	PADDER
C8	22-162	.0001 MFD.	600V
C10	22-182	.00025 MFD.	600V
C11	22-188	.02 "	400V
C12	22-190	.1 "	200V
C13	22-212	.05 "	400V
C14	22-226	.005 "	600V
C15	22-455	.01 "	1800V
C16	22-517	(4 MFD. ⑧,	250V
C17		4 " ⑥,	250V.
C18	22-516	8 " ⑥	250V.
R1	63-377	170 OHMS	1/4 W.
R2	63-261	9930 "	1/4 W.
R3	63-481	400M "	1/4 W.
R4	63-288	1.9M "	1/4 W.
R5	63-300	990 "	1/4 W.
R6	63-452	650Ω OHMS	1/4W
R7	63-317	400M - VOL. CONTROL	1/4W.
R8	63-362	400Ω OHMS	1/4W.
R9	63-135	25M "	1/4W.
R10	63-376	190M "	1/4W.
R11	63-290	260M "	1/4W.
R12	63-293	990M "	1/4W.
R13	63-278	99 M "	1/4W.

1	3-4302	ANT. COIL ASSEMBLY
2	3-4304	OSC. COIL ASSEMBLY
3	95-346	1ST I.F. TRANS.
4	95-347	2ND I.F. TRANS.
5	85-88	BAND SELECT. SWITCH
6	100-37	BALLAST TUBE 115V
7	95-345	POWER CHOKE
8	49-141	SPEAKER

©John F. Rider, Publisher

©John F. Rider, Publisher

MODELS
6-D-116, 6-D-117, 6-D-118

CHASSIS No. 5633

SOCKET VOLTAGES

Tube	Position	1	2	3	4	5	6	7	8	9
6A8	1st Det. Osc.	0	AC	100	50	-5	100	AC	1	-1
6K7	I. F.	0	AC	100	100	5	—	AC	5	0
6Q7	2nd Det. A.V.C.	0	AC	50	0	0	—	AC	1	0
25A6	Power	0	AC	90	100	1	—	AC	0	—
25Z6	Rectifier	0	AC	AC	AC	100	—	AC	125	—
100-37	115 Volt Ballast	—	—	—	—	—	—	—	—	—

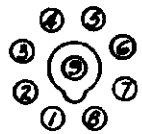

All voltages measured from point indicated to ground, using a 1000 ohm per volt meter. Antenna and ground disconnected.

Line Voltage 112V. (A.C.)

Current Consumption 44 watts.

Power Output 1.5 watts.

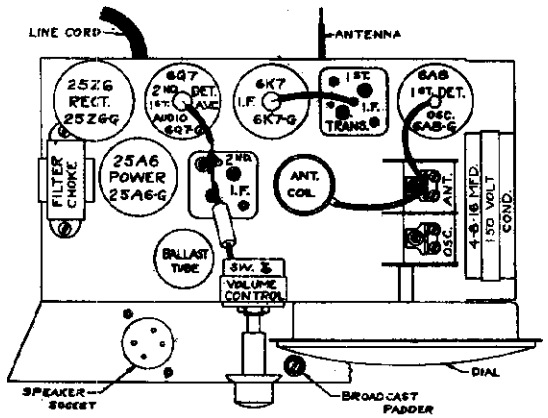

TUBE POSITION

CAUTION: Do not ground chassis while testing or during operation, otherwise filter choke will be short circuited.

MODELS
7-D-119, 7-D-126, 7-D-127, 7-D-138, 7-D-151, 7-D-148, 7-D-162, 7-D-168

CHASSIS No. 5707

SOCKET VOLTAGES

Tube	Position	1	2	3	4	5	6	7	8	9
6A8	1st Det. Osc.	0	AC	125	80	20	100	AC	25	15
6K7	I. F.	0	AC	125	125	25	—	AC	25	10
6H6	2nd Det. A.V.C.	0	AC	10	25	10	—	AC	25	—
6F5	1st Audio	0	AC	—	60	—	—	AC	25	5
25A6	Power	0	AC	110	125	1	—	AC	25	—
25Z6	Rectifier	0	0	AC	AC	105	—	AC	125	—
	Ballast	—	—	—	—	—	—	—	—	—

Measured from point indicated to junction of filter choke and speaker field using a 1000 ohm per volt meter.

Line Voltage 112 (A.C.)

Current Consumption 44 watts.

Power Output 1.5 watts.

For other data see index

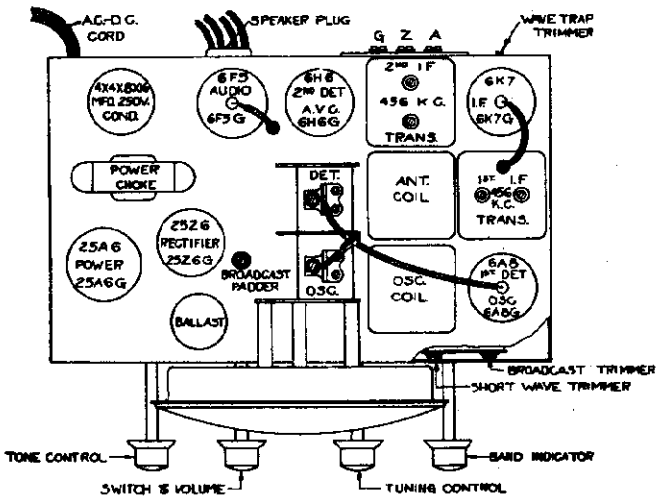

TUBE POSITION

NOTE: See bottom page 18 for details of antenna connector strip.

MODELS 6-M-90S, 6-M-90D
Chassis 5630
Schematic, Parts List

ZENITH RADIO CORP.

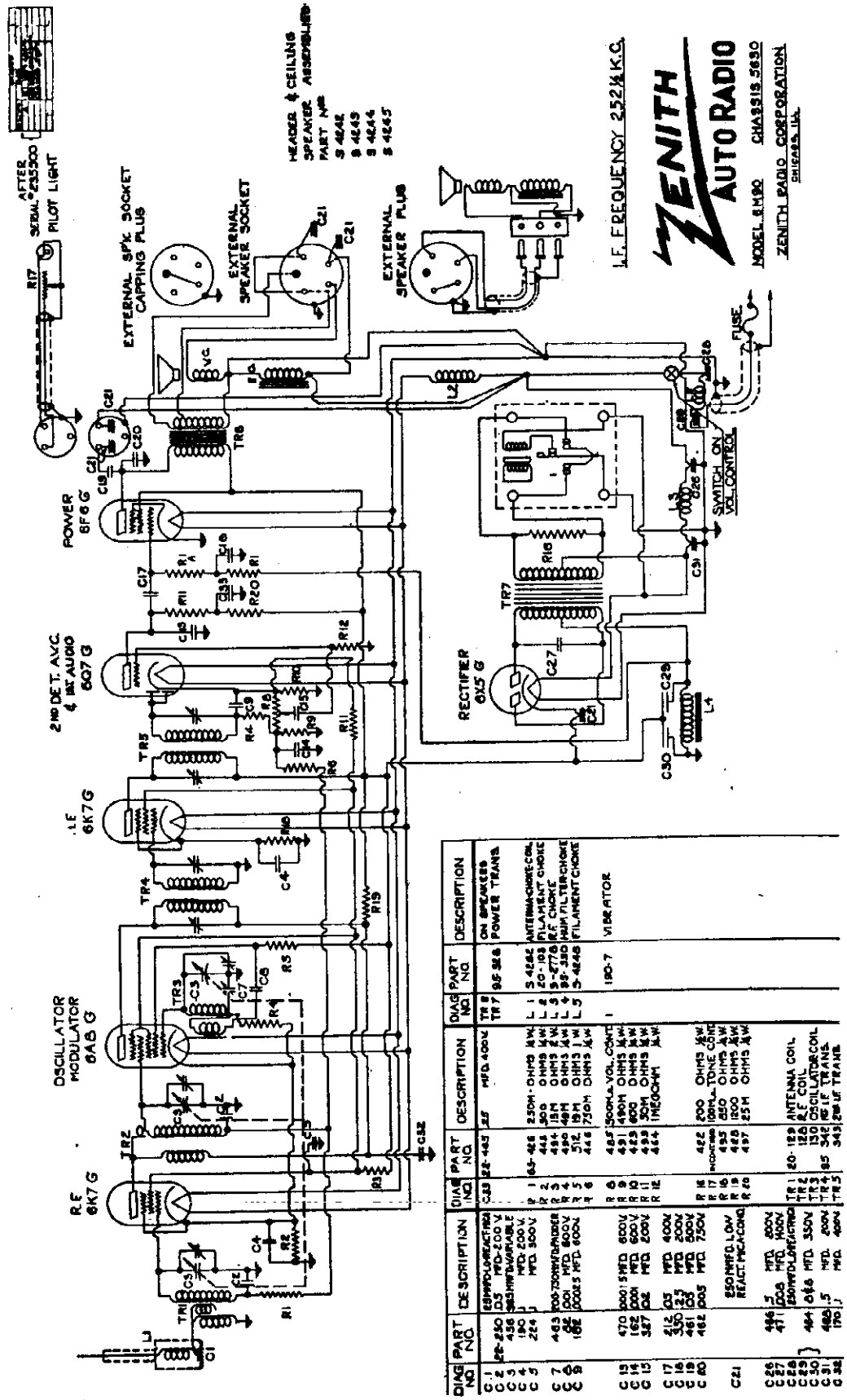

DIAG NO	PART NO	DESCRIPTION	DIAG NO	PART NO	DESCRIPTION
C1	PE-250	.03 MFD. 400 V	R 1	65-426	250M - OHMS ½W
C2	456	.05 MFD-200 V	R 2	444	500 OHMS ½W
C3	383	MFD. VARIABLE	R 3	494	18M OHMS ½W
C4	190	MFD. 200 V	R 4	490	48M OHMS ½W
C5	224	MFD. 500 V	R 5	512	19M OHMS 1 W
C6			R 6	446	750M OHMS ½W
C7	463	100-300 MMFD.	R 7	485	500M LA. VOL. CONT.
C8	461	.001 MFD. 600 V	R 8	491	490M OHMS ½W
C9	462	.0025 MFD. 600 V	R 9	493	600 OHMS ½W
C10	186		R 10	493	30M OHMS ½W
C11			R 11	494	1MEGOHM
C12			R 12		
C13	470	.0001 5 MFD. 600 V	R 13		
C14	160	MFD. 600 V	R 14	422	200 OHMS ½W
C15	387	MFD. 200 V	R 15	495	100M LA. TONE CONT.
C16	412	.05 MFD. 400 V	R 16	493	250 OHMS ½W
C17	330	.25 MFD. 200 V	R 17	INCLUDED	
C18	461	.02 MFD. 500 V	R 18	496	1800 OHMS ½W
C19	462	.005 MFD. 750 V	R 19	497	25M OHMS ½W
C20			R 20		
C21		250 MMFD. LOW REACT MICA COND.	TR 1	20-129	ANTENNA COIL
C22	446	.5 MFD. 600 V	TR 2	128	R.F. COIL
C23	471	.006 MFD. 400 V	TR 3	130	OSCILLATOR COIL
C24		250 MMFD. LOW REACT MICA COND.	TR 4	345	I.F. TRANS.
C25	464	.046 MFD. 350 V	TR 5	343	2ND I.F. TRANS.
C26	483	.5 MFD. 200 V	TR 6	85	POWER TRANS.
C27	170	.1 MFD. 400 V	TR 7	95-326	ON SPEAKER POWER TRANS.
C28			L 1	S-4842	ANTENNA-CHOKE COIL
C29			L 2	20-103	FILAMENT CHOKE
C30			L 3	S-4778	R.F. CHOKE
C31			L 4	95-380	MAIN FILTER CHOKE
C32			L 5	S-4848	FILAMENT CHOKE
			I	180-7	VIBRATOR

For other data see index

©John F. Rider, Publisher

MODELS 215,216,225
Socket,Trimmers,Voltage

ZENITH RADIO CORP.

MODELS 6-M-90S,6-M-90D
6-M-91-D,6-M-91-S
MODEL 6-M-92

Models 215-216-225

Socket Voltages

Tube Type	Position	Fil. Volt.	Plate Volt.	Cath. Volt.	Screen Volt.	Supp. Volt.	Plate Current
2-68	R.F.	2.5	270	8	107	8	5.8
2-68	1st Det.	2.5	270	10	107	10	4.7
2-56	Osc.	2.5	140	0	-	-	4.8
2-68	I.F.	2.5	170	8	107	8	5.5
2-55	2nd Det. AVC	2.5	70	7	-	-	1.4
2-69	Power	2.5	250	0	250	0	26.
2-80	Rect.	5.	350ac	-	-	-	34.ac.

Line 115 Volts — All Controls Maximum

(all readings, with exception of heaters and rectifier plates taken from socket connections to ground. Use 1,000 ohm per volt D.C. meter. Antenna disconnected).

BALANCE I.F. frequency at 175 K.C. Condenser gang at 1500 K.C. and oscillator padder at 600 K.C.

For other data see index

MODELS 215, 216, 225 (Chassis #2044)

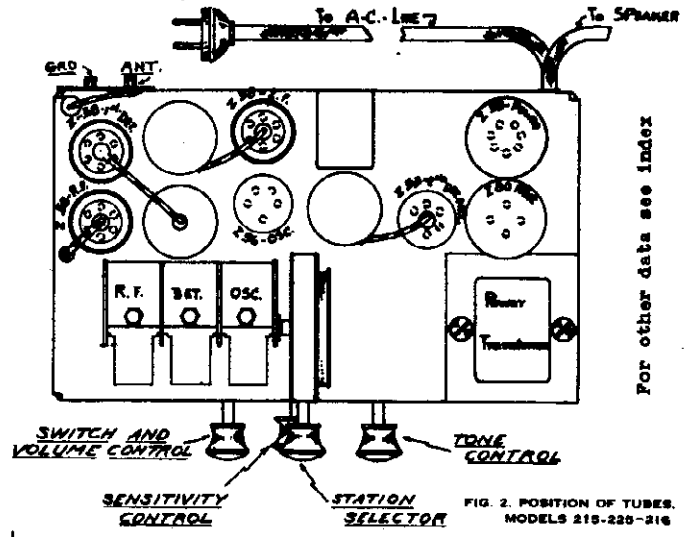

FIG. 2. POSITION OF TUBES. MODELS 215-225-216

For other data see index

SOCKET VOLTAGES 6-M-92

Tube	Position	1	2	3	4	5	6	7	8	9
6K7	R.F. Amp.	0	5.8	175	84	4.6	—	0	4.6	0
6A8	1st Det. Osc.	0	0	175	84	—16	110	5.8	4.6	0
6K7	I. F. Amp.	0	5.8	180	84	3.6	—	0	3.6	0
6Q7	2nd Det. A. V. C. 1st Audio	0	5.8	130	.3	.3	—	0	1.3	0
6F6	Power	0	0	170	180	—3.4	—	5.8	0	—
6X5	RECT.	0	5.8	AC	—	AC	—	0	180	—

Voltage at Battery 6V.
Voltage at Switch 5.8 V.
Antenna disconnected.
All voltages measured with 1000 ohms per volt D. C. meter.
Total current consumption 6 Amperes.
Sensitivity at one watt output 4 Mv.
Maximum undistorted power output 4 Watts.

MODELS 6-M-90S, 6-M-90D, 6-M-91D 6-M-91 S

SOCKET VOLTAGES

Tube	Position	1	2	3	4	5	6	7	8	9
6K7	R.F. Amp.	0	5.8	215	100	5.7	—	0	5.7	0
6A8	1st Det. Osc.	0	0	215	100	—26	150	5.8	5.9	0
6K7	I.F. Amp.	0	5.8	225	100	5.4	—	0	5.4	0
6Q7	2nd Det. A. V. C. 1st Audio	0	5.8	150	—2	—2	—	0	2	0
6F6	Power	0	0	210	220	—3	—	5.8	0	—
6X5	RECT.	0	5.8	AC	—	AC	—	0	220	—

Voltage at Battery 6V.
Voltage at Switch 5.8V.
All voltages measured with 1000 ohms per volt D. C. meter.
Total current consumption 6.5 Amperes.
Sensitivity at one watt output 1.5 Mv.
Maximum undistorted power output 4.5 Watts.

BOTTOM VIEW OF SOCKET

6-M-91 S
MODELS 6-M-90S, 6-M-90D, 6-M-91D, 6-M-92

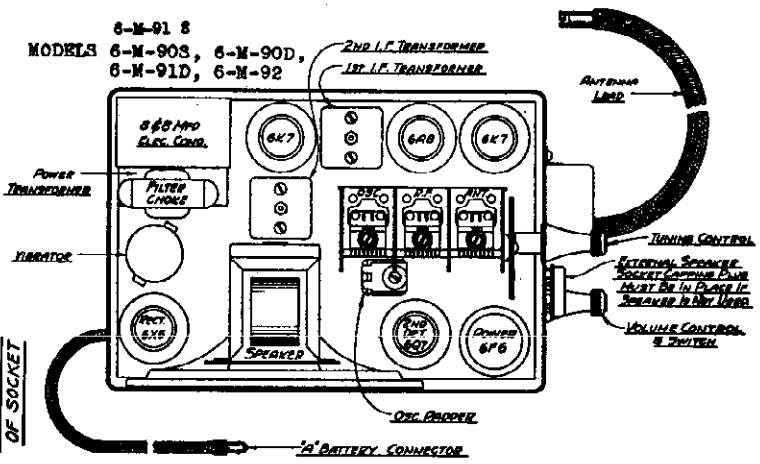

©John F. Rider, Publisher

MODELS 6-M-910,6-M-910

Chassis 5631

Schematic,Parts

ZENITH RADIO CORP.

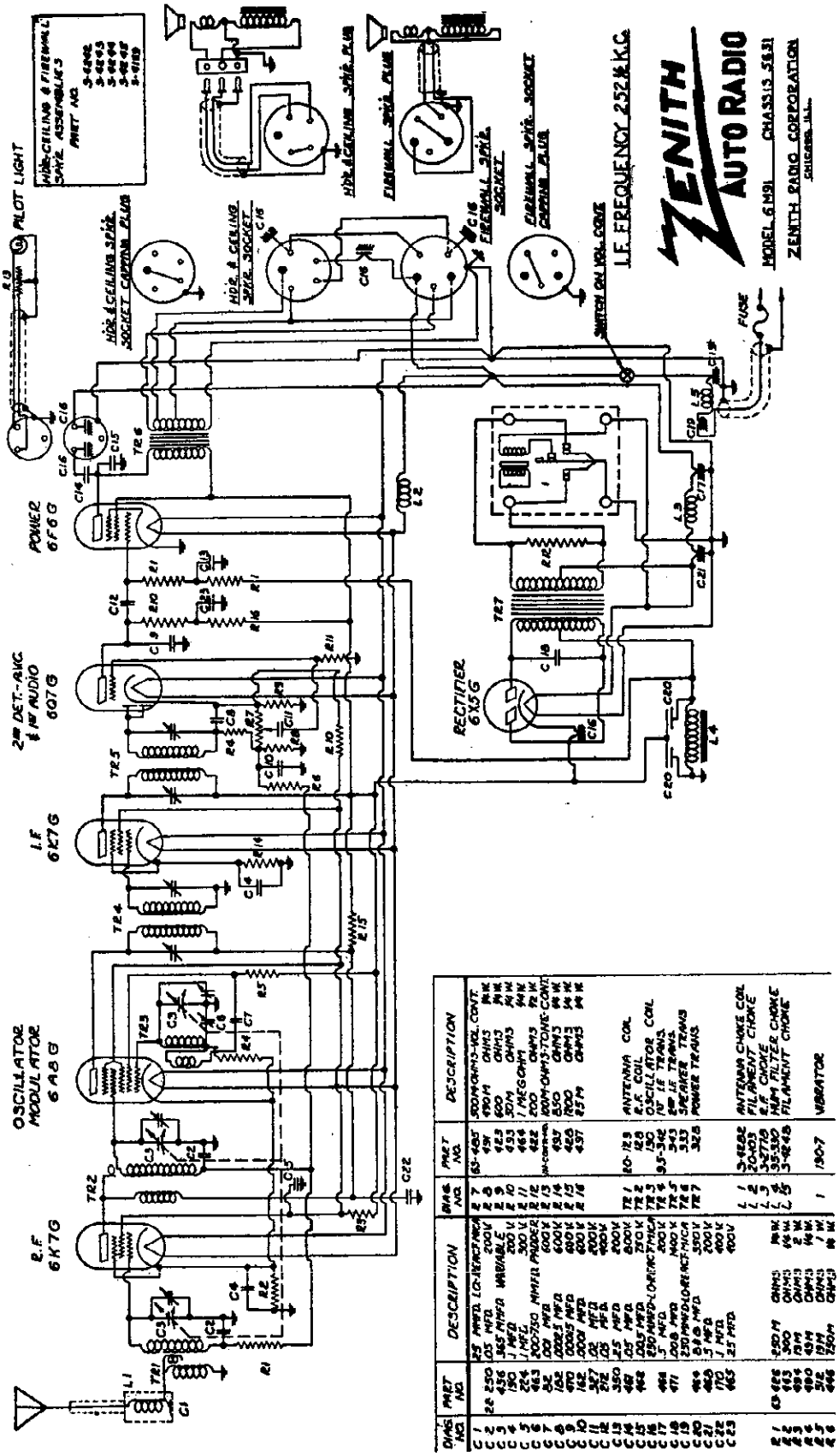

DWG NO.	PART NO.	DESCRIPTION
C 1	26 250	.25 MMFD. LO-RESONANCE
C 2		.05 MFD. 200V
C 3	436	.365 MMFD VARIABLE
C 4	190	.1 MFD. 200 V
C 5	224	.1 MFD. 300 V
C 6	463	200-250 MMFD PADDER
C 7	52	.001 MFD 600 V
C 8	184	.0025 MFD 600 V
C 9	670	.0025 MFD 600 V
C 10	142	.001 MFD 600 V
C 11	327	.02 MFD 400V
C 12	212	.05 MFD 200V
C 13	350	.25 MFD 200V
C 14	469	.05 MFD 600V
C 15	468	.005 MFD 750 V
C 16		250 MMFD-LORESONANCE
C 17	466	.1 MFD 200 V
C 18	471	.006 MFD 1400 V
C 19		250 MMFD-LORESONANCE
C 20	466	.0 4 0 MFD 350 V
C 21	470	.1 MFD 400 V
C 22	470	.1 MFD 400 V
C 23	465	.25 MFD 400 V
R 1	63-485	500 OHMS-VOL CONT.
R 2	191	190 M OHMS
R 3	183	600 OHMS
R 4	153	30 M OHMS
R 5	464	1 MEGOHM
R 6	482	200 OHMS
R 7		100M-OHMS-TONE CONT.
R 8	459	350 OHMS
R 9	426	1200 OHMS
R 10	457	85 M OHMS
R 11		
R 12		
R 13		
R 14		
R 15		
R 16		
T R 1	20-123	ANTENNA COIL
T R 2	128	R.F. COIL
T R 3	130	OSCILLATOR COIL
T R 4	83-342	1ST I.F. TRANS.
T R 5	343	2ND I.F. TRANS.
T R 6	333	DRIVER TRANS.
T R 7	328	POWER TRANS.
L 1	3-4848	ANTENNA CHOKE COIL
L 2	20403	FILAMENT CHOKE
L 3	36719	R.F. CHOKE
L 4	35-330	HUM FILTER CHOKE
L 5	3-4848	FILAMENT CHOKE
	1307	VIBRATOR
R 17	63-426	250 M OHMS 1/4 W.
R 18	163	300 OHMS 1/4 W.
R 19	494	1200 OHMS 2 W.
R 20	490	1M OHMS 1/4 W.
R 21	512	1M OHMS 1 W.
R 22	446	150M OHMS 1/2 W.

©John F. Rider, Publisher

MODEL 6-M-92
Chassis 5632
Schematic, Parts

ZENITH RADIO CORP.

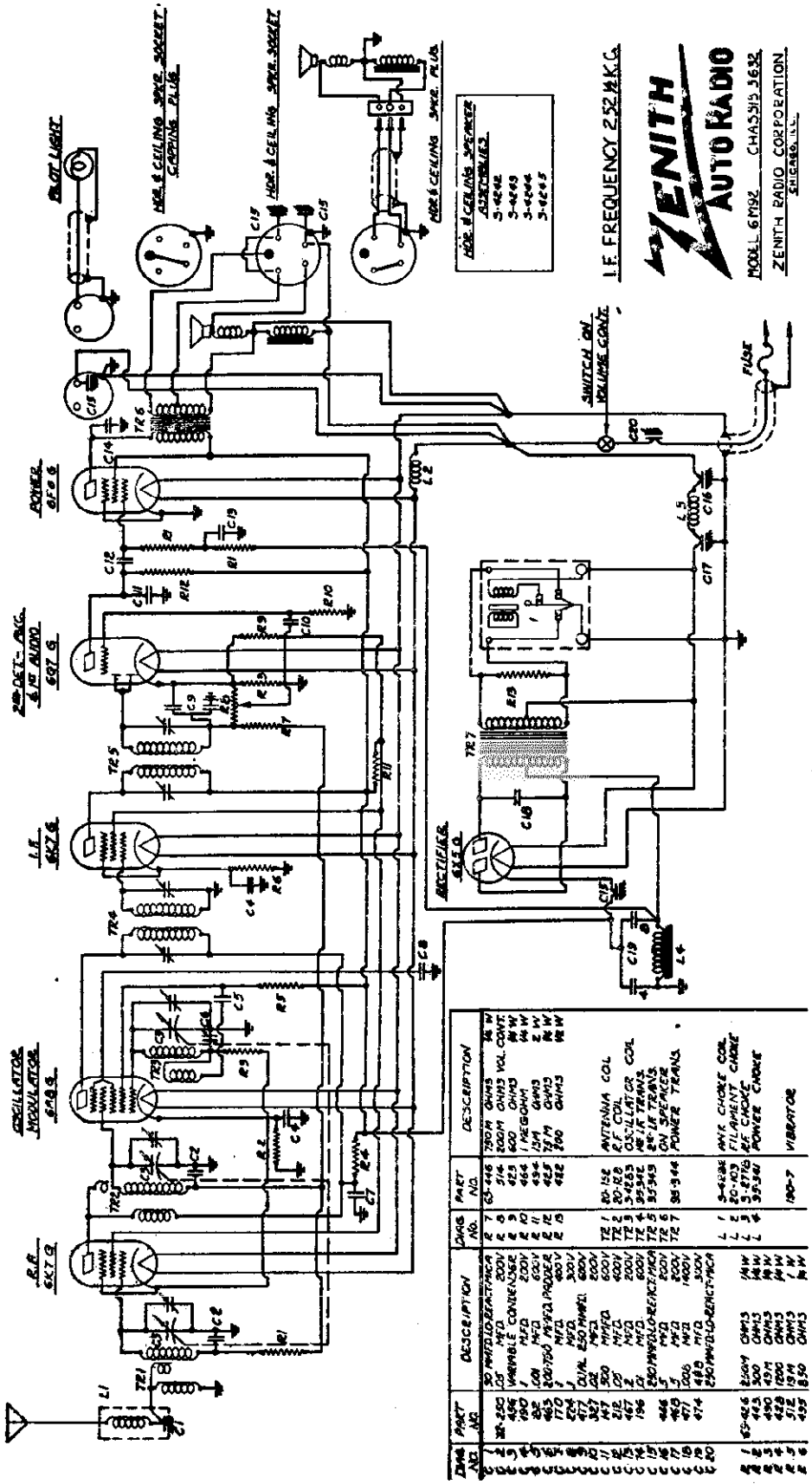

CHAS. NO.	PART NO.	DESCRIPTION
C1	30-250	30 MMFD. CERAMICON
C2	456	.05 MFD.
C3	180	VARIABLE CONDENSER
C4	1	.1 MFD.
C5	82	.001 MFD.
C6	463	250-750 MMFD. PADDER
C7	110	.1 MFD.
C8	224	.1 MFD.
C9	477	DUAL 250 MMFD.
C10	387	.02 MFD.
C11	147	.006 MFD.
C12	212	.02 MFD.
C13	167	.1 MFD.
C14	196	250 MMFD. MICA
C15	466	.5 MFD.
C16	460	.006 MFD.
C17	471	.1 MFD.
C18	474	250 MMFD. CERAMICON
C19		
C20		
R1	3-4246	250M OHMS 1/4 W
R2	514	200M OHMS VOL. CONT.
R3	423	600 OHMS 1/4 W
R4	464	1 MEGOHM 1/4 W
R5	494	15M OHMS 1/2 W
R6	483	25M OHMS 1/2 W
R7	482	300 OHMS 1/2 W
R8		
R9		
R10		
R11		
R12		
R13		
R14		
R15		
TR1	20-158	ANTENNA COIL
TR2	20-828	R.F. COIL
TR3	3-4283	OSCILLATOR COIL
TR4	39-542	1st I.F. TRANS.
TR5	39-545	2nd I.F. TRANS.
TR6	39-543	ON SPEAKER
TR7	38-544	POWER TRANS.
L1	3-4284	ANT. CHOKE COIL
L2	20-103	FILAMENT CHOKE
L3	3-4286	R.F. CHOKE
L4	39-540	POWER CHOKE
L5		
	180-7	VIBRATOR
	3-4246	250M OHMS 1/4 W
	443	500 OHMS 1/4 W
	490	49M OHMS 1/4 W
	488	1200 OHMS 1/4 W
	512	19M OHMS 1/4 W
	455	850 OHMS 1/4 W

©John F. Rider, Publisher

MODELS 6-S-27, 6-S-52
Chassis 5619

ZENITH RADIO CORP.

Schematic, Socket
Trimmers, Parts

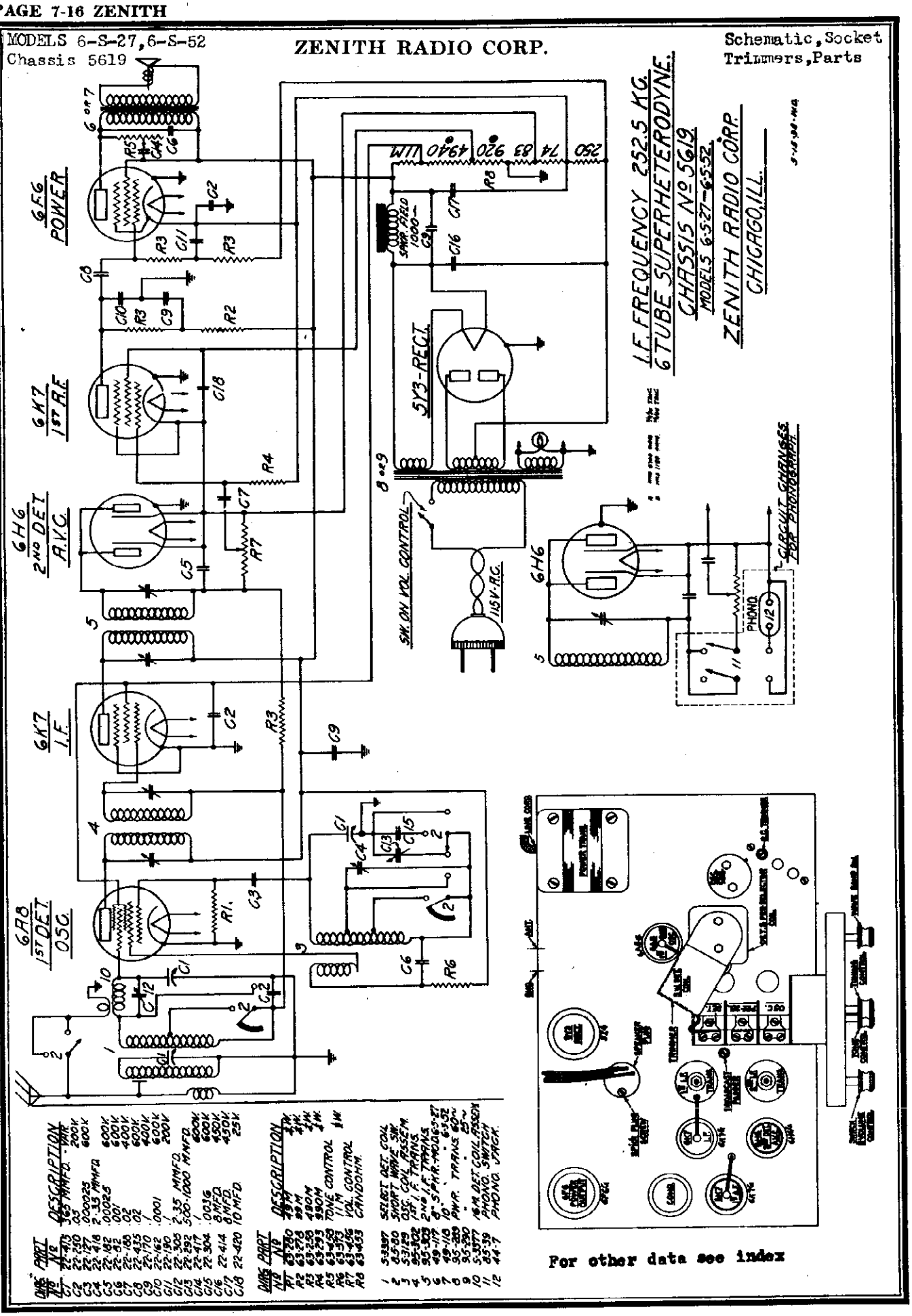

CHART No.	PART No.	DESCRIPTION
C1	22-430	.05 MMFD. MICA 200V
C2	22-127	.00025 " " 600V
C3	22-418	2.33 MMFD " " 600V
C4	22-82	.00025 " " 600V
C5	22-182	.001 " " 600V
C6	22-188	.02 " " 400V
C7	22-435	.02 " " 600V
C8	22-170	.1 " " 200V
C9	22-190	.0001 " " 600V
C10	22-162	2.35 MMFD. 600V
C11	22-305	500-1000 MMFD. 600V
C12	22-292	.1 " 600V
C13	22-417	.0036 " 450V
C14	22-304	8 MFD 450V
C15	22-414	8 MFD 450V
C16	22-413	10 MFD 25V
C17	22-420	
C18	22-420	

CHART No.	PART No.	DESCRIPTION
R1	69-780	1 MEG 1/2W
R2	69-778	88 M 1/2W
R3	69-255	490M 1/2W
R4	69-293	990M 1/2W
R5	69-450	TONE CONTROL 1 M
R6	69-383	VOL. CONTROL 1/2 MEG
R7	69-456	CANOHM 1/2W
R8	69-453	

CHART No.	PART No.	DESCRIPTION
1	53397	SELECT. DET. COIL
2	85780	SHORT WAVE SW.
3	53159	OSC. COIL ASSEM.
4	95-302	1ST I.F. TRANS.
5	95-303	2ND I.F. TRANS.
6	49-118	P. S. PWR. TRANS. 6-S-27
7	49-110	PWR. TRANS. 6-S-52
8	95-330	ANT. COIL ASSEM.
9	53077	R.F. DET. COIL ASSEM.
10	85-39	PHONO. SWITCH
11	44-9	PHONO. JACK
12		

For other data see index

ZENITH RADIO CORP.

MODELS 6-S-128, 6-S-137
6-S-147, 6-S-152
6-S-157
Chassis 5634
Schematic, Parts

For other data see index

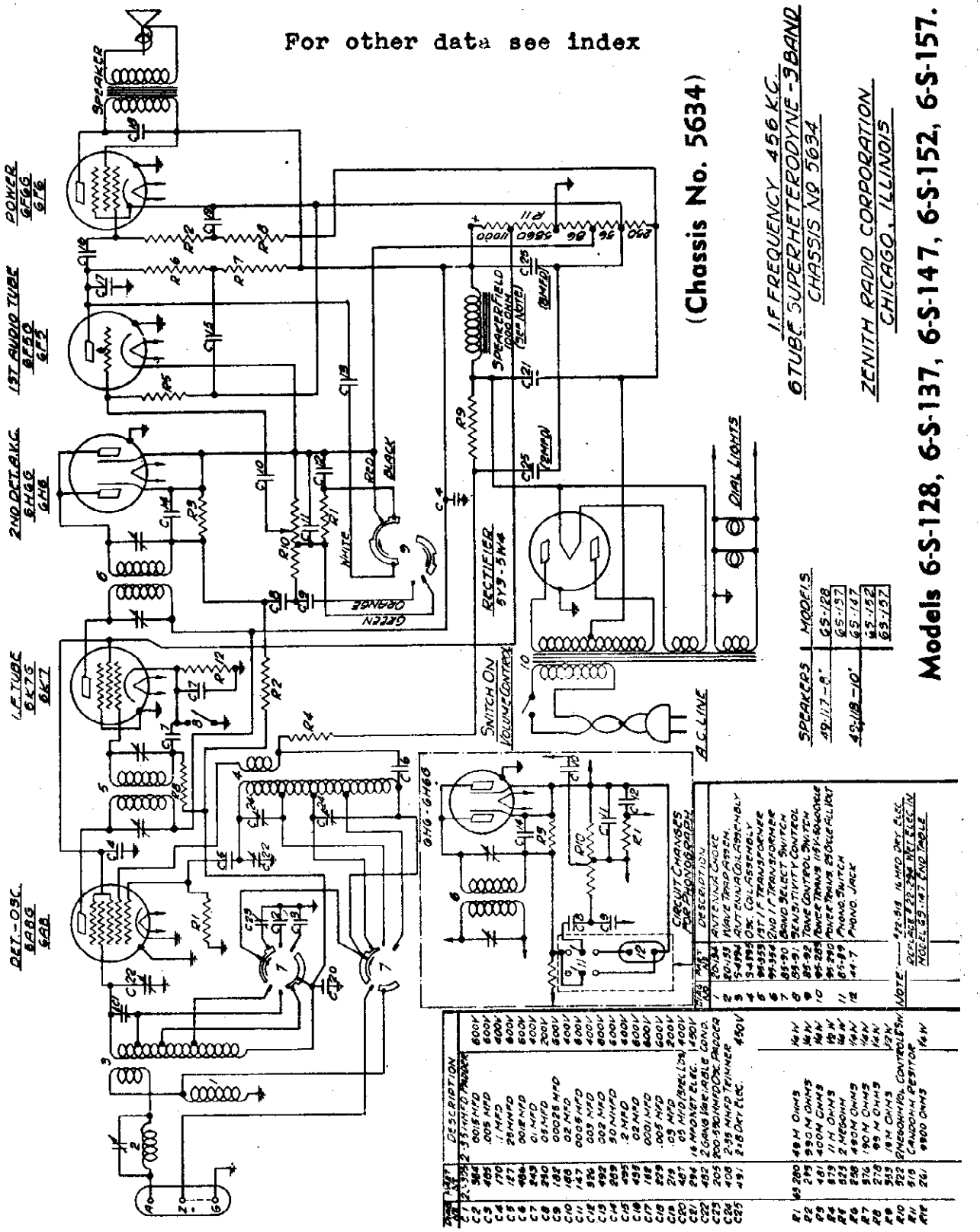

©John F. Rider, Publisher

MODELS 7-D-119, 7-D-126
7-D-127, 7-D-138
7-D-151, 7-D-148

ZENITH RADIO CORP.

7-D-162, 7-D-168
Chassis 5707
Schematic, Parts

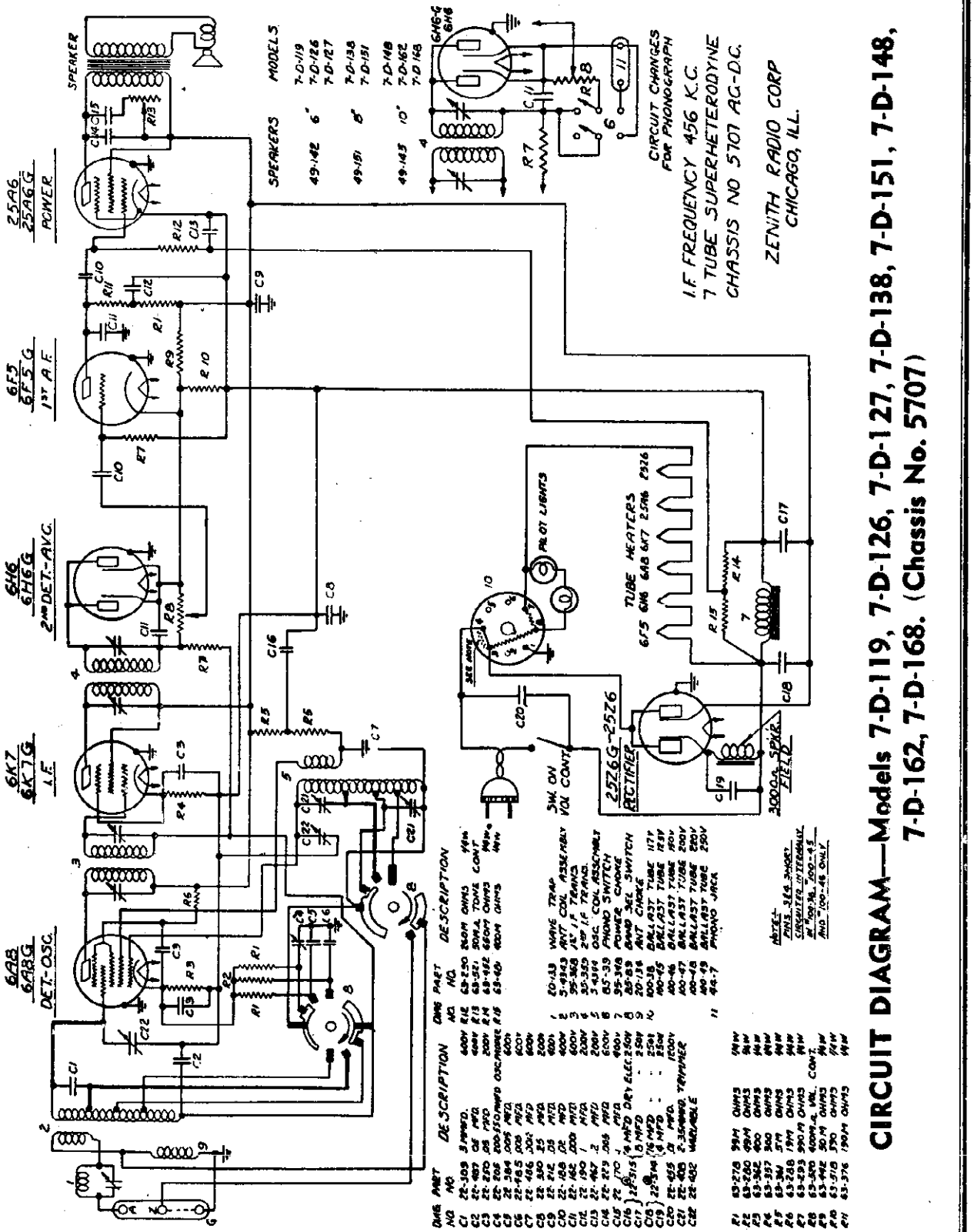

©John F. Rider, Publisher

ZENITH RADIO CORP.

MODELS 7-M-91S, 7-M-91D
Chassis 5706
Schematic, Socket
Trimmers, Parts

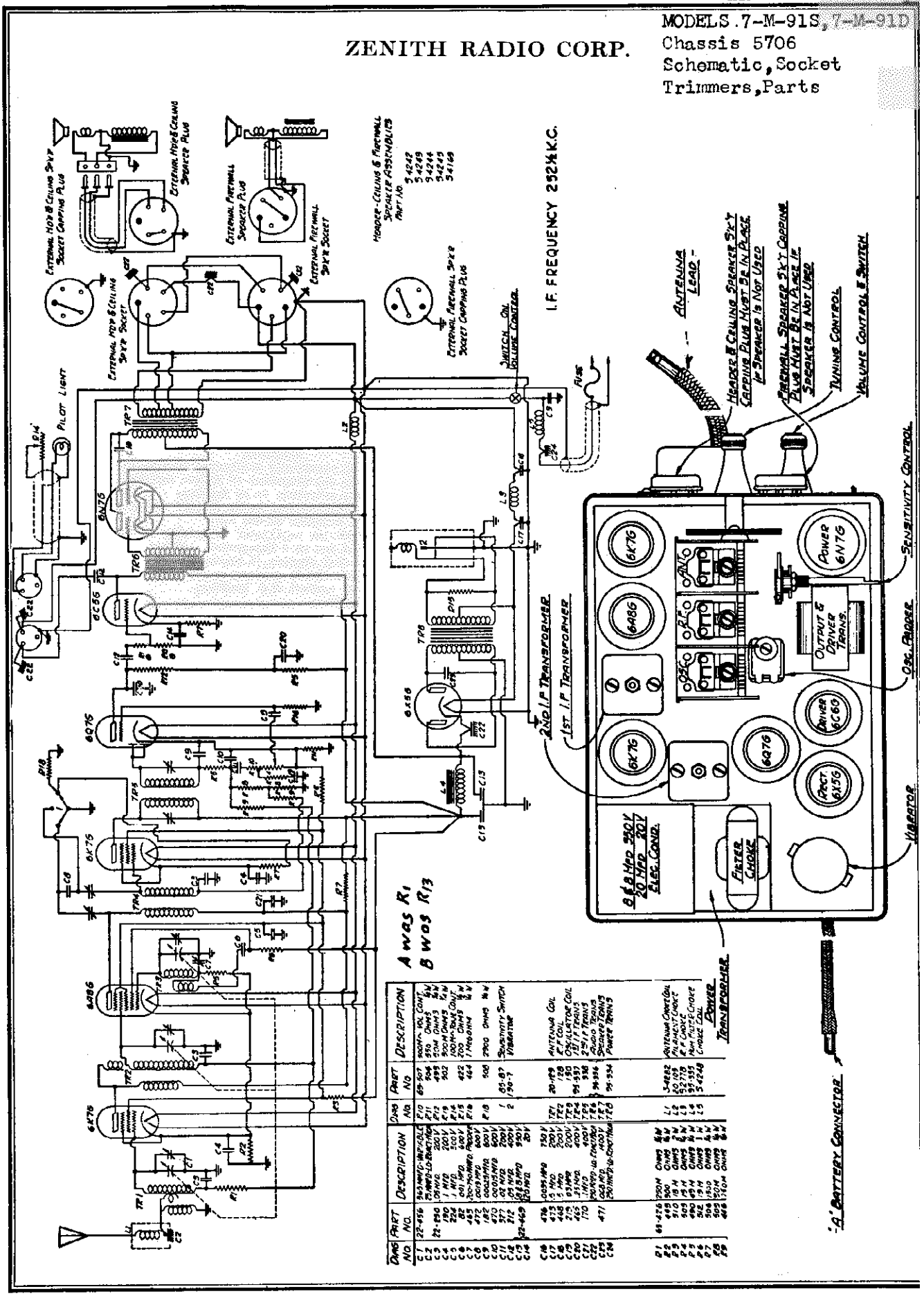

CHAS NO.	PART NO.	DESCRIPTION
C1	22-456	365 MMFD VARIABLE
C2		25 MMFD TRIMMER
C3	22-290	.05 MFD
C4	180	.1 MFD
C5	324	.01 MFD
C6	325	.001 MFD
C7	472	.0015 MFD
C8	182	.0003 MFD
C9	470	.02 MFD
C10	471	.05 MFD
C11	372	.01 MFD
C12	312	.05 MFD
C13	22-469	250 MMFD
C14		
C15		
C16	476	.0035 MFD
C17	473	.1 MFD
C18	448	.1 MFD
C19	465	.25 MFD
C20	323	.01 MFD
C21	170	.1 MFD
C22		200 MMFD TRIMMER
C23	471	.002 MFD
C24		250 MMFD TRIMMER
R1	61-426	200 M
R2	418	500 M
R3	420	1 M
R4	490	0.5 M
R5	502	1.5 M
R6	506	1500
R7	505	250 M
R8	496	1.6 M
R9		
R10	69-507	500 M VOL CONT.
R11	504	250 OHMS
R12	495	250 M OHMS
R13	502	500 M OHMS
R14		200 OHMS
R15	422	1 MEGOHM
R16	464	2 MEGOHM
R17		500
R18	1	25-67 SENSITIVITY SWITCH
R19	2	250-1 VIBRATOR
TP1	20-498	ANTENNA COIL
TP2	178	OSC. COIL
TP3	177	OSC. ADJUSTOR COIL
TP4	94-495	1ST I.F. TRANS
TP5	538	2ND I.F. TRANS
TP6	94-496	AUDIO TRANS
TP7		SPEAKER TRANS
TP8	95-534	POWER TRANS
L1		ANTENNA COUPLING COIL
L2	54482	R.F. CHOKE
L3	52-778	R.F. CHOKE
L4	95-535	HUM NULLIFIER CHOKE
L5	54248	CHOKE COIL

©John F. Rider, Publisher

MODELS 6-S-27, 6-S-52
MODELS 7-M-91S, 7-M-91D
MODELS 7-S-28, 7-S-53
Alignment, Voltage

ZENITH RADIO CORP.

Models 7-M-91S and 7-M-91D. (Chassis No. 5706)

The sensitivity switch should be in the clockwise or sensitive position during adjustment. The output meter may be connected across the voice coil connections at the speaker socket.

"A" Connect the service oscillator to the control grid of the 6A8 tube and the chassis.

Connect the output meter across the primary of the speaker transformer.

Set the service oscillator to 252.5 K.C., and adjust the trimmers on the I. F. transformers for the greatest output reading. These adjustments should be repeated several times using as weak an input signal as possible so as to obtain greater accuracy.

"B" Change the service oscillator lead from the grid of the 6A8 to the antenna connection. A male Deico Remy connector may be used in making a connection to the antenna lead.

Set the service oscillator at 1400 K.C.

Rotate the gang condenser one and one fourth turns from the minimum setting. At the proper position eight teeth on the tuning gear will be visible past the gear bracket.

Adjust the oscillator, R.F. and antenna trimmers in that order to the point giving the greatest output.

"C" Set the service oscillator at 600 K.C. and rotate the gang condenser to tune in this signal. Move the gang condenser to and fro past the signal meanwhile adjusting the oscillator padder condenser until the combination of adjustments giving the greatest reading of the output meter is obtained.

"D" Repeat operation "B."

SOCKET VOLTAGES 7-M-91S, 7-M-91D

Tube	Position	1	2	3	4	5	6	7	8	9
6K7	R.F. Amp.	0	5.8	250	100	5.2	—	0	6.2	0
6A8	1st Det. Osc.	0	0	250	100	—23	165	5.8	5.2	0
6K7	I.F. Amp.	0	5.8	240	100	4.7	—	0	6.7	0
6Q7	2nd Det. A. V. C. 1st Audio	0	0	145	—2	—2	—	5.8	1.6	0
6C5	Driver	0	0	240	0	0	—	5.8	8.2	—
6N7	Class B Power	0	0	250	0	0	250	5.8	0	—
5X5	RECT.	0	0	AC	—	AC	—	5.8	250	—

All voltages measured with 1000 ohms per volt D. C. meter. Voltage at Battery 6V.
Total current consumption 8.2 Amperes. Voltage at Switch 5.8V.
Sensitivity at one watt output 1MV. Antenna disconnected.
Maximum power output 9 watts at 6 volts.

Socket Voltages

MODELS 7-S-28, 7-S-53
CHASSIS #5704

TUBE	POSITION	1	2	3	4	5	6	7	8	9
6K7	R.F.	0	6_{ac}	250	75	0	-	0	0	-.1
6A8	1st.Det. Osc.	0	6_{ac}	250	75	-1	195	0	0	-.1
6K7	I. F.	0	6_{ac}	250	75	0	-	0	0	-.1
6H6	2nd Det. A.V.C.	0	6_{ac}	-2	-2.5	-2	-	0	-2.5	-
6K7	1st Audio	0	6_{ac}	65	14	-1	-	0	- 1	-.1
6F6	PWR.	0	6_{ac}	235	250	-10	-	0	-5	-
5Y3	Rect.	0	310	-	250_{ac}	-	250_{ac}	-	310	-

Line Voltage 115 Antenna and Ground Disconnected

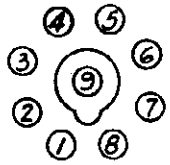

All voltages measured from point indicated to ground, using a 1000 ohm per volt D.C.meter (unless marked otherwise).

Alignment

The use of an accurately calibrated service oscillator is imperative in the alignment of modern superheterodynes.
The alignment procedure is as follows:
(1) Connect service oscillator to grid of 6A8 and ground. Balance I.F. trimmers at 456 K.C.
(2) Connect service oscillator to antenna and ground binding posts and set at 6 megacycles. Adjust trimmer on gang for correct dial reading, (6 megacycles on Band B).
(3) Set service oscillator and pointer to 21 megacycles and adjust S.W. trimmer (through hole in top of chassis) for correct dial reading.
(4) Recheck 6 megacycle adjustment.
(5) Set service oscillator and pointer to 1700 K. C. (Band A) and adjust broadcast trimmer (through hole in top of chassis) for correct dial reading.
(6) Set service oscillator at 600 K.C. Adjust broadcast padder (through hole in top of chassis next to I.F. transformer), meanwhile rocking pointer to and fro past 600 K.C. on dial to combination giving greatest output.
(7) Readjust at 1700 K.C.
Note: These adjustments affect each other slightly and the entire procedure should be repeated to secure maximum results.

For other data see index

Socket Voltages

MODELS 6-S-27, 6-S-52
CHASSIS #5619

TUBE	POSITION	1	2	3	4	5	6	7	8	9
6A8	1st.Det. Osc.	0	5_{ac}	225	70	-.1	190	0	0	0
6K7	I.F.	0	5_{ac}	225	70	0	-	0	0	0
6H6	2nd Det.	0	5_{ac}	-1	-2.5	-1	-	0	-2.5	-
6K7	1st.Aud.	0	5_{ac}	60	14	-2.5	-	0	-2.5	0
6F6	PWR	0	5_{ac}	220	225	-2.5	-	0	-2.5	-
5Y3	Rect.	0	300	-	305_{ac}	-	305_{ac}	-	300	-

Line voltage 110. Antenna and Ground disconnected.

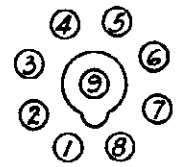

All voltages measured from point indicated to ground, using a 1000 ohm per volt D.C.meter (unless marked otherwise).

Alignment

(1) Balance I.F. transformers at 252½ K.C. with test oscillator connected to control grid of 6A8 and ground.
(2) Turn band switch to "C" Band. Connect test oscillator to antenna and ground leads and set for 15 megacycles. Adjust oscillator trimmer on gang condenser to secure correct dial reading.
(3) Adjust detector trimmer (located on bracket on top of detector coil) for maximum output.
(4) Turn band switch to "A" Band. Adjust oscillator trimmer (through hole in top of chassis next to oscillator) for correct dial reading at 1400 K.C. Also adjust preselector and detector trimmers on gang for maximum output.
(5) Adjust oscillator padder (next to oscillator section of gang through hole in top of chassis) while rocking pointer back and forth past 600 K.C. to the combination giving greatest output.
(6) Recheck at 1400 K.C.
(7) Repeat entire procedure.

©John F. Rider, Publisher

Schematic, Socket Trimmers, Parts

ZENITH RADIO CORP.

MODELS 7-S-28, 7-S-53
Chassis 5704

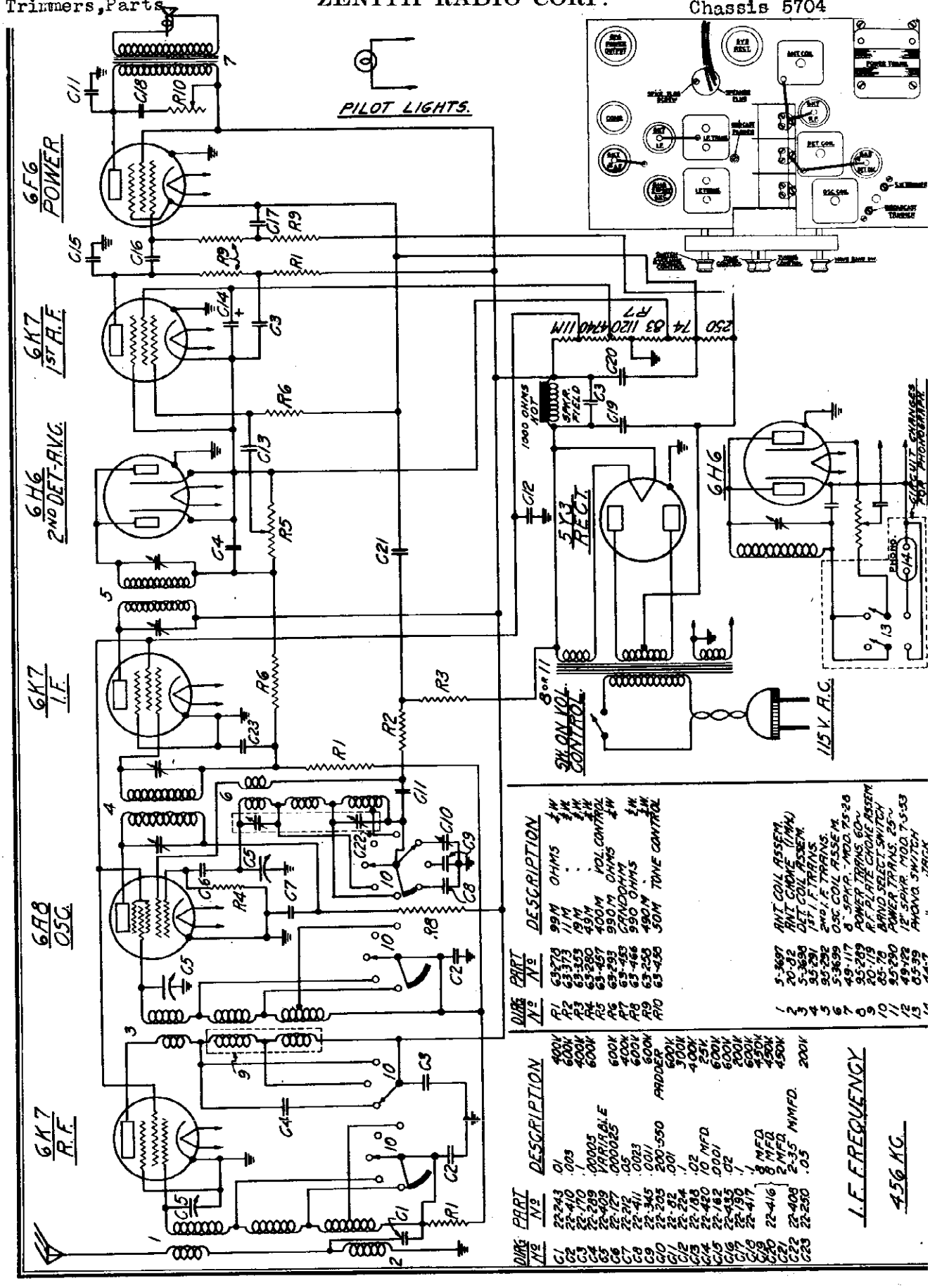

DWG. No.	PART No.	DESCRIPTION	
C1	22-243	.01	400V
C2	22-410	.005	600V
C3	22-170	.1	400V
C4	22-209	.00005 VARIABLE	600V
C5	22-409	.00025	600V
C6	22-127	.05	400V
C7	22-212	.0023	600V
C8	22-411	.011	600V
C9	22-345	200-550 PADDER	
C10	22-205	.001	600V
C11	22-82	.1	400V
C12	22-224	.02	400V
C13	22-188	.10 MFD	25V
C14	22-420	.0001	600V
C15	22-162	.02	600V
C16	22-135	.1	400V
C17	22-130	1 MFD	400V
C18	22-411	8 MFD	450V
C19	22-416	8 MFD	450V
C20		2-35 MMFD.	
C21	22-408	.05	200V
C22	22-250		
C23			

DWG. No.	PART No.	DESCRIPTION	
R1	63-279	99M OHMS	½W
R2	63-373	11M	½W
R3	63-353	1.9M	½W
R4	63-280	49M	½W
R5	63-407	400M OHMS VOL CONTROL	½W
R6	63-293	990M OHMS	½W
R7	63-453	CANDOHM	
R8	63-466	990 OHMS	½W
R9	63-255	490M TONE CONTROL	½W
R10	63-458	50M	½W

DWG. No.	PART No.	DESCRIPTION
1	5-3697	ANT. COIL ASSEM.
2	20-82	ANT. CHOKE (INAL)
3	5-3698	OET COIL ASSEM.
4	95-291	1ST I.F. TRANS.
5	95-292	2ND I.F. TRANS.
6	5-3699	OSC. COIL ASSEM.
7	49-117	8" SPKR. MOD. 7S-26
8	95-289	P.P. PLATE CHOKE ASSEM.
9	20-119	BAND SELECT SWITCH
10	85-76	POWER TRANS. 25~
11	95-290	POWER TRANS. 60~ MOD. 7S-53
12	49-122	12" SPKR.
13	85-99	AVC-VOL SWITCH

©John F. Rider, Publisher

MODELS 090,90,V-8
Chassis 2012-4J
MODEL ZE-12
Chassis 5609,5610
Alignment,Socket

ZENITH RADIO CORP.

MODELS 91,92
Notes
MODELS 811,862,865
866,1162

Zenith 090,90,V-8

Chassis 2012-4J is used in Models 090,90 and V-8. This chassis is more or less similar to Chassis 2012 and 2012-J that was used in Models AH, CH, and RH, which are shown on the following pages in *Rider's Manuals: page* 1-23 *in the revised edition;* *674-*E, in the early edition, and page* 2717 *in the Rider-Combination Manual.* The circuit changes that were made in Chassis 2012 to make the Chassis 2012-4J are shown below and it is suggested that you make a notation in your Index about the similarity that exists between these two chassis.

The antenna circuit has been revised, as may be seen by comparing Fig. 1 with the schematic of Chassis 2012 on one of the pages mentioned above. Instead of a three-gang condenser (Part No. 22-116), a four-gang condenser is used with the fourth section tuning the antenna winding. (The part number of the four-gang condenser is 22-134.) The winding in the antenna circuit, which is tuned by the fourth section of the new condenser, has been added to the antenna coil assembly. Note that the condensers and resistors in this part of the circuit are the same as those shown in the schematic for the early chassis.

The padder condenser assembly (Part Nos. 22-120 and 22-82) has been replaced with a single variable condenser, Part No. 22-129. Also the 8-mf. filter condenser (Part No. 22-121) mounted at the side of the condenser gang has been removed and mounted below the chassis. No mounting base is used, and it carries a new part number, 22-136.

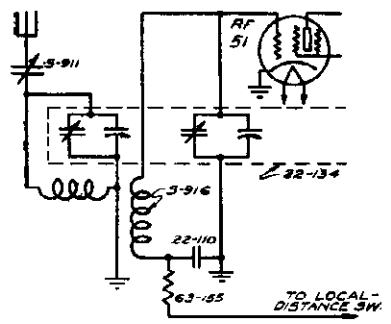

Fig. 1. Antenna circuit of Zenith Chassis 2012-4J shows new connections.

Fig. 2 shows the voltage divider, the a.v.c. tube, and the new local-distance switch. Note that the lead marked "To Local-Distance Switch" in Fig. 1 is connected to that lead in Fig. 2 which carries an arrow in the plate circuit of the 24 tube. Note also that the condensers, Part No. 22-99, in the Chassis 2012 have been eliminated, and that the one in the plate circuit of the 24 tube has been replaced with one having a value of 0.03 mf., Part No. 22-111. The value of the resistor connected between the "Local-Distance Switch" and the lead to the tone control (the one at the right of Fig. 2) has a value of 4.5 megohms, Part No. 63-188. The 0.1-mf. condenser, connected between the movable arm of the volume control and ground, has been eliminated. The part number of this condenser was 22-115.

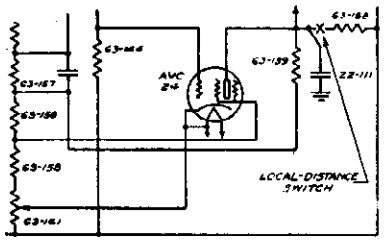

Fig. 2. A "Local-Distance" switch is now included in Zenith Chassis 4012-4J.

In other respects the chassis 2012-4J is the same as chassis 2012.

Zenith ZE-12

This power ack, used with Models 39, 39-A, and 40-A, will be found on the following pages in *Rider's Manuals: 1-12 in the revised edition;* **665 in the early edition, and 2698 in the Rider-Combination.* The values of some of the resistors and condensers were unavailable at the time of publication and are given below; this data was supplied by a serviceman.

The total resistance of the voltage divider is 7,250 ohms. The resistor designated as Part No. 22-42 is now a part of the voltage divider and a change should be made in your diagram, although the resistor is still connected between the center tap of the 7.5-volt winding and ground. Starting at the top of the diagram, the first section of the divider, *i.e.* down as far as the blue lead, is 1000 ohms. The next section, between the blue and red leads, is 3500 ohms. Between the red lead and ground, 1000 ohms. The section formerly designated as 22-42, is 1750 ohms.

The condenser in the yellow lead to the left of the choke is 2 mf. The one to the right of the choke in the green lead is 4 mf., as is also the one in the blue lead. The condenser in the red lead, shunting the 1000-ohm resistor, is 1 mf.

Zenith 811, 862, 865, 866, 1162

The model 811 (Chassis 5609) employs a 6-inch speaker, Part No. 49-93; models 862 and 1162 (Chassis 5610) use a 12-inch dynamic speaker, Part No. 49-94. The schematic shown on *Zenith page 6-5 in Rider's Volume VI* is used in both of these chassis. Below will be found a sketch showing the locations of the trimmers and the tube sockets.

Alignment:

Balance i-f. transformers at 252.5 kc. with signal generator connected to the grid of the 6A7 and the chassis ground.

Adjust wave-trap padder (located beneath the chassis at rear right side) for weakest signal with 252.5 kc. signal generator connected between antenna and ground.

Turn wave-band switch clockwise to the highest frequency band and set signal generator to 15 mc., still connected to the antenna and ground. Balance oscillator trimmer on gang condenser for correct dial reading at this frequency.

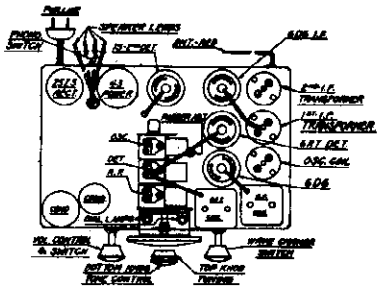

Top view of the Zenith chassis 5609 and 5610, showing tubes and trimmers.

Turn wave-band switch counter-clockwise to standard broadcast position. Adjust broadcast oscillator trimmer (located beneath the chassis at the right center) for correct dial reading at 1400 kc. and adjust r-f. and 1st detector trimmers on gang condenser for loudest signal.

Set signal generator at 600 kc. Adjust oscillator broadcast padder through hole in top of chassis, simultaneously rocking the dial back and forth, for loudest signal.

Zenith 91, 92

The value of the center-tapped resistor, Part No. 63-210, was omitted from the list of parts shown in Rider's Manuals on pages 2-8, 674-N and 2714. The section connected to the junction of the speaker field and the choke is 2,800 ohms and the section connected to Part No. 63-167 is 10,000 ohms. Please make this addition to the schematic diagram of this set in your Volume II Manual.

© John F. Rider Publisher

Voltage, Alignment
Socket, Trimmers

ZENITH RADIO CORP.

MODELS 12-L-57, 12-L-58
Chassis 1202, 1202A

Socket Voltages

TUBE	POSITION	1	2	3	4	5	6	7	8	9
6K7	R.F.	0	2.9ac	225	97	0	-	2.9ac	0	- .1
6A8	1st.Det. Osc.	0	2.9ac	225	97	-5	200	2.9ac	0	- .1
6K7	I.F.	0	2.9ac	225	97	0	-	2.9ac	0	- .1
6H6	2nd Det. A. V. C.	0	2.9ac	-2.1	-2.5	-2.5	-	2.9ac	-2.5	-
6C5	Shadow Meter	0	2.9ac	215	-	0	-	2.9ac	8.5	-
6C5	1st.Audio	0	2.9ac	42	-	0	-	2.9ac	0	-
6C5	Driver	0	2.9ac	215	-	0	-	2.9ac	8.5	-
6F6	Power	0	2.9ac	340	340	-4.5	-	2.9ac	25	-
5Y3 524	RECT.	0	350	-	300 a.c.	-	300 a.c.	-	350	-

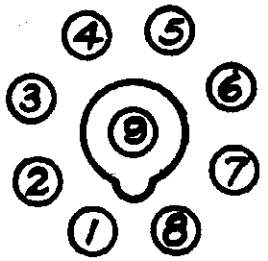

BOTTOM VIEW OF SOCKET

Line Voltage 115 Antenna and Ground Disconnected
Voltages measured from point indicated to ground, using a 1000 ohm per volt meter, except heaters. (2-7)

Alignment

The bands are as follows:

Band	Color	Kilocycles	Megacycles	Meters
A	Green	550-1,740	.55-1.74	545-172
B	"	2,000-7,000	2-7	150-42.8
C	Red	150-570	.15-.37	2,000-800
D	"	7,000-22,500	7-22.5	42.8-13.3

1. Connect service oscillator to grid of 6A8 detector, oscillator tube and peak I.F. trimmers (see diagram Page 3) at 456 K.C.

2. Connect service oscillator to antenna post and set to 1400 K.C. Adjust trimmer A, B and C to resonance with dial indicator to 1400 K.C.

3. Set service oscillator to 600 K.C. and adjust broadcast padder D for maximum gain while rocking dial slowly over 600 K.C.

4. Place band switch on band B (2-7M.C.) and set service oscillator and dial indicator to 6 megacycles.

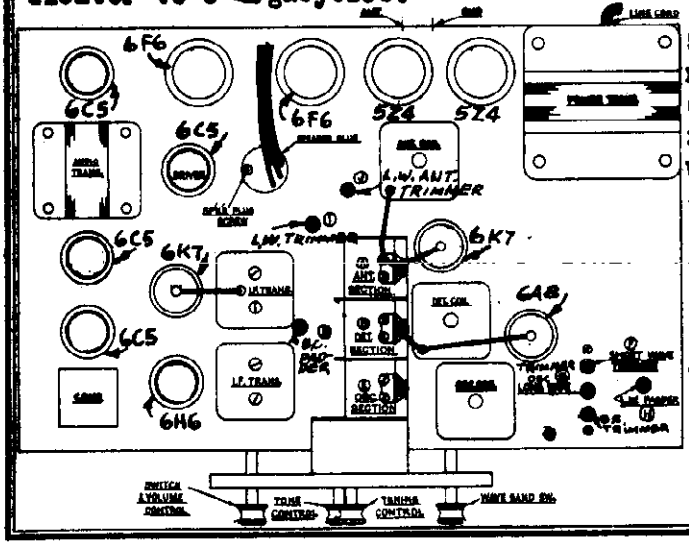

5. Align D band (7-22.5 megacycles) next by setting service oscillator and dial indicator to 18 megacycles and rocking indicator slowly over that poir while adjusting trimmer F to maximum output.

6. Set band switch to C band (long wave and peak at 350 K.C. with trimmers G, I and J. Turn dial indicator and srvice oscillator to 150 K.C. and adjust long wave padder H while slowly rocking dial indicator.

7. Rebalance again at 6 megacycles and 1400 K.C. as in 2 and 4.

©John F. Rider, Publisher

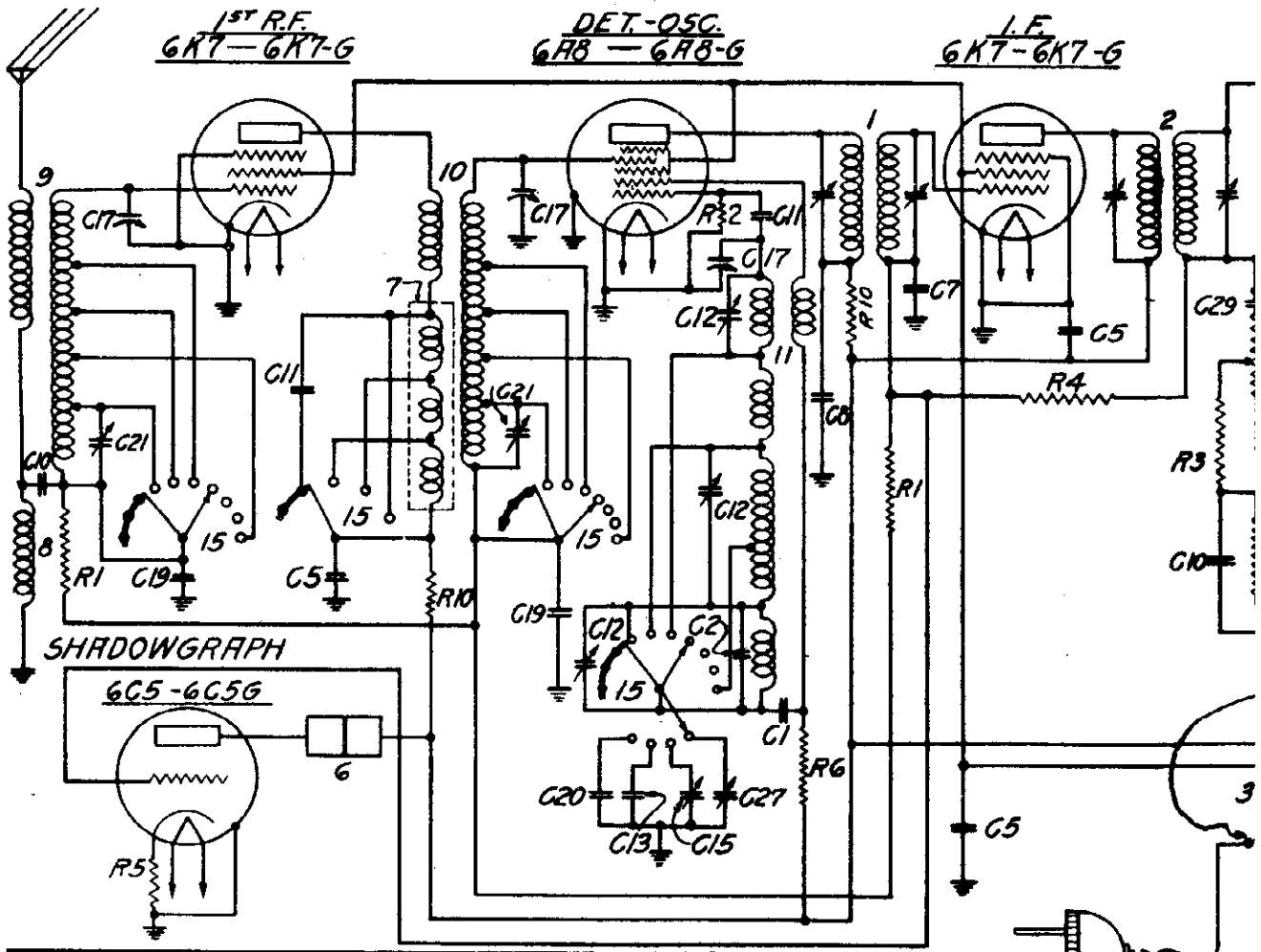

DIAG. No.	PART No.	DESCRIPTION	
R1	63-278	99M OHMS	½W.
R2	63-280	49M "	½W.
R3	63-288	19M "	½W.
R4	63-293	990M "	½W.
R5	63-303	700 "	½W.
R6	63-373	11M "	½W.
R7	63-450	1MEG. VOL. CONTROL	
R8	63-451	1MEG. TONE CONTROL	
R9	63-481	400M. OHMS	½W.
R10	63-466	990 "	½W.
R11	63-471	CANDOHM	
R12	63-242	2500 OHMS	½W.

C1	22-82	.001 MFD.	600V.
C2	22-127	.000025	600V.
C3	22-147	.0005	600V.
C4	22-162	.0001	600V.
C5	22-170	.1	400V.
C6	22-188	.02	400V.
C7	22-190	.1	200V.
C8	22-212	.05	400V.
C9	22-229	.005	600V.
C10	22-243	.01	400V.
C11	22-289	.00005	600V.
C12	22-324	2-35 MMFD. - 3 SECTION.	
C13	22-345	.0011 MFD.	600V.
C14	22-358	.002 "	600V.
C15	22-205	200-550 MMFD. PADDER ®	
C16	22-368	.003 MFD.	600V.
C17	22-409	3 GANG VARIABLE	
C18	22-405	10 MFD.	50V.
C19	22-410	.003 MFD.	600V.
C20	22-411	.0023 "	600V.
C21	22-418	2-35 MMFD.	

DIAG. No.	PART No.	DESCRIPTION	
C22	22-294	16 MFD.	450V.
C23	22445	8 MFD.	"
C24		4 MFD.	"
C25	22-433	.5 MFD.	400V.
C26	22-435	.02 "	600V.
C27	22-424	50-180 MMFD PADDER	
C28	22-420	10 MFD.	25V.
C29	22-250	.05 MFD.	200V.
1	95-291	1ST I.F. TRANS. - 456 KC.	
2	95-292	2ND I.F. " "	
3	95-306	117V. -50-60 CYCLE TRANS.	
4	95-307	AUDIO TRANS.	
5	95-320	POWER CHOKE	
6	122-10	SHADOW METER	
7	20-120	R.F. PLATE CHOKE	
8	20-124	ANT. CHOKE - 2MH.	
9	5-3747	ANT. COIL ASSEM.	
10	5-3746	DET. COIL ASSEM.	
11	5-3745	OSC. COIL ASSEM.	
12	49-121	12" SPKR. - MODEL 12 L 57	
13	49-124	12" "	MODEL
14	49-125	6 " - 5800~FIELD	12L98
15	85-82	BAND SELECTOR SW.	
16	95-310	25~ ALL VOLT. PWR. TRANS.	
17	85-39	PHONO. SWITCH.	
18	44-7	PHONO. JACK.	

CIRCUIT CH
FOR PHONO

©John F. Rider, Publisher

IO CORP.

MODELS 12-L-57, 12-L-58
Chassis 1202, 1202A
Schematic, Parts

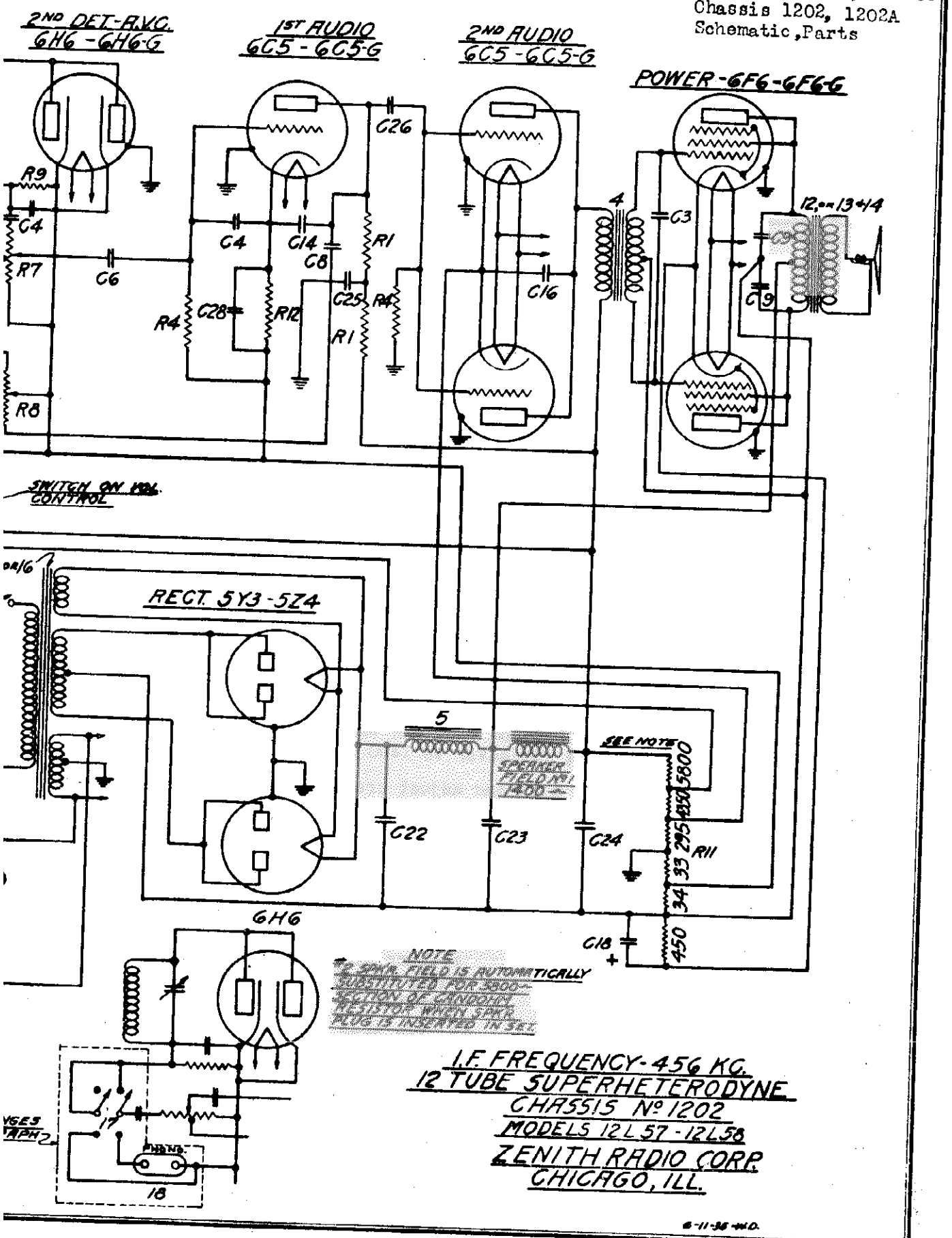

MODELS 15,16
MODELS 15-E,15-EP
16-E,16-EP
Schematics,Socket

ZENITH RADIO CORP.

MODEL 15,16
MODEL 15-E,16-E
Receiver Schematics

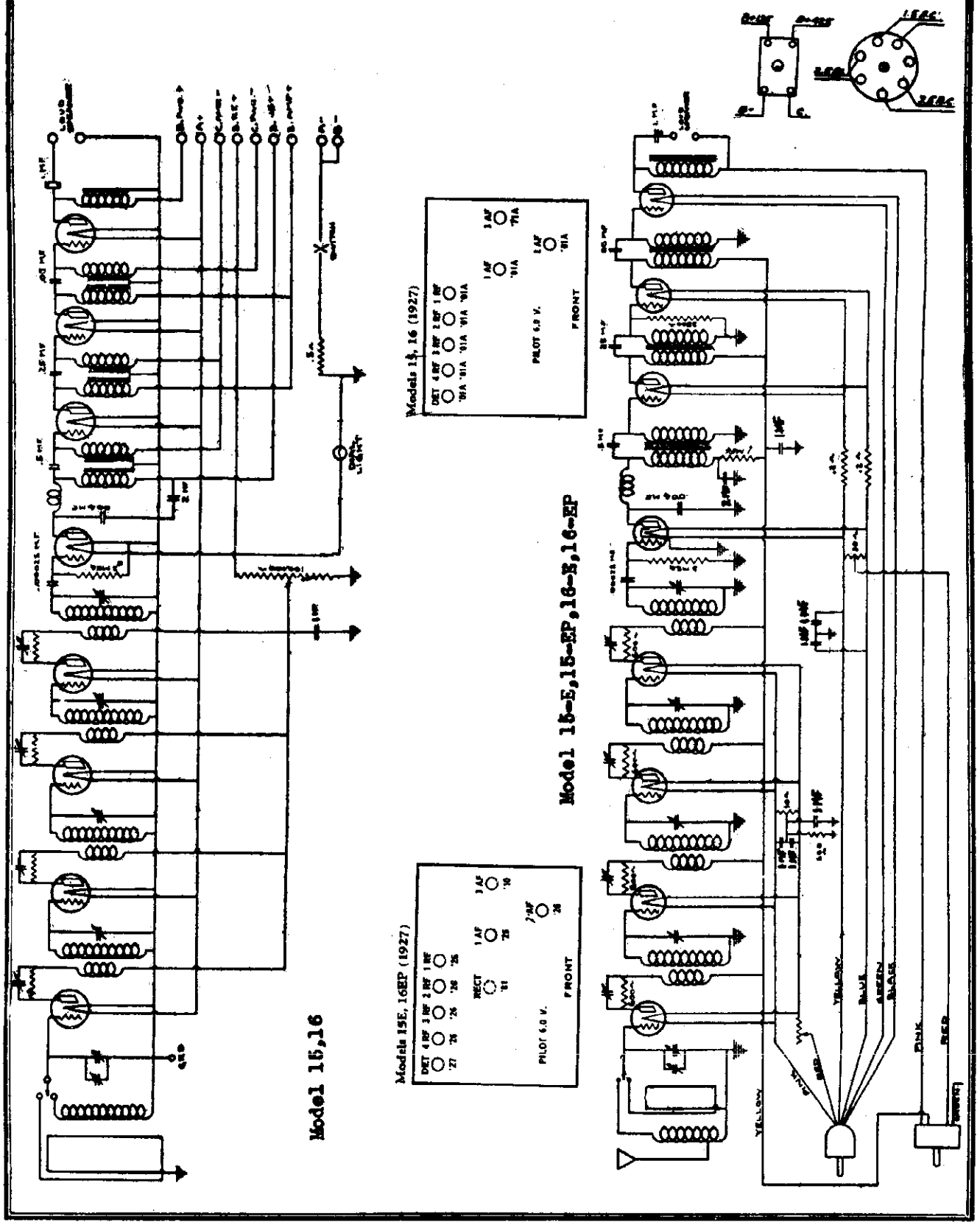

©John F. Rider, Publisher

ZENITH RADIO CORP. MODELS 16-A-61, 16-A-63

Stratosphere

SERVICE DATA

Stratosphere Chassis 1601-C, 1601-F Voltage, Socket, Trimmers Alignment

Socket Voltages

TUBE	POSITION	1	2	3	4	5	6	7	8	9
6K7	R.F.	0	3AC	280	100	3.5	-	3AC	3.5	0
6A8	1st Det.& Osc.	0	3AC	280	100	.4	125	3AC	3.5	0
6K7	1st I.F.	0	3AC	280	100	6.5	-	3AC	6.5	0
6K7	2nd I.F.	0	3AC	280	100	6.5	-	3AC	6.5	0
6H6	2nd Det.	0	3AC	-.2	0	-.2	-	3AC	0	-
6F5	1st Audio	0	3AC	-	3	-	-	3AC	1	0
6F6	2nd Audio Driver	0	3AC	280	280	0	-	3AC	25	-
6C5	Shadowgraph Amp.	0	3AC	280	-	0	-	3AC	11	-
6F6	(4 tubes) Power	0		370	370	0	-		35	-
5Y3	Rectifier Top Chassis	0	390	-	320AC	-	320AC	-	390	-
5Y3	Rectifier Lower Chassis	0	360	-	300AC	-	300AC	-	360	-

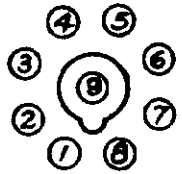

BOTTOM VIEW OF SOCKET

Line Voltage 115 Antenna and Ground Disconnected

Voltages measured from point indicated to ground, using a 1000 ohm per volt meter, except heaters (2 - 7)

Alignment

1. The diagram on page shows position of major components and aligning adjustments. It should be studied carefully before any attempt is made to adjust the various circuits.

2. Set service oscillator to 456 KC, and connect to the grid of the 6A8 tube. The grid cap should not be removed from the tube as this will remove bias. Tune the I.F. transformers for maximum output. Alignment should always be made with the service oscillator set to as low an output as will give a satisfactory indication on the output meter.

3. Connect the service oscillator to the antenna and ground post. With the band switch in the broadcast position, set the dial pointer to 1700 kilocycles, and adjust the oscillator trimmer on the gang condenser for a maximum output. Align the R.F. and detector condenser trimmers, also located on the gang condenser, for a maximum output.

4. Set the dial pointer to 600 kilocycles, and adjust the B.C. padder meanwhile rocking the gang condenser back and forth across 600 kilocycles until the padder setting for maximum output is obtained.. It may be necessary to go back and make a slight correction of the trimmer at 1700 kilocycles after the padder adjustment is completed.

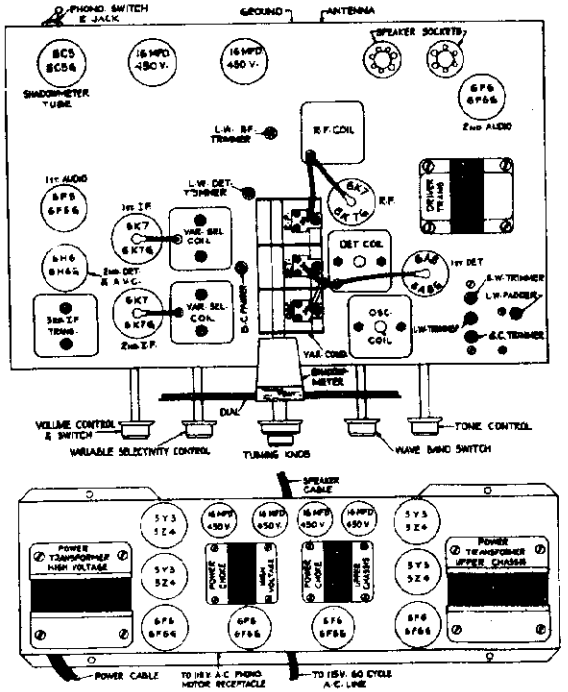

Power Pack Chassis Drawing

5. Turn the band switch for the "B" band. Rock the gang back and forth across the 6 megacycle readings, meanwhile adjusting the oscillator trimmer on the gang condenser until maximum output is obtained. It will always be found that the dial reading for 6 megacycles is very close to this point. The service oscillator, of course, should be set at 6 megacycles.

6. Align "D" band (7-22.5 megacycles) next by setting service oscillator and dial indicator to 18 megacycles, and rocking indicator slowly over that point while adjusting the S.W. Trimmer to maximum output.

7. Set back to 1700 K.C. Readjust oscillator circuit this time using broadcast trimmer on chassis base.

8. Set band switch to "C" band (long wave) and peak at 350 K.C. with L.W.,R.F.-Det. and Oscillator trimmers. Turn dial indicator and service oscillator to 160 K.C., and adjust long wave padder while slowly rocking dial indicator.

9. Repeat operation #2.

©John F. Rider, Publisher

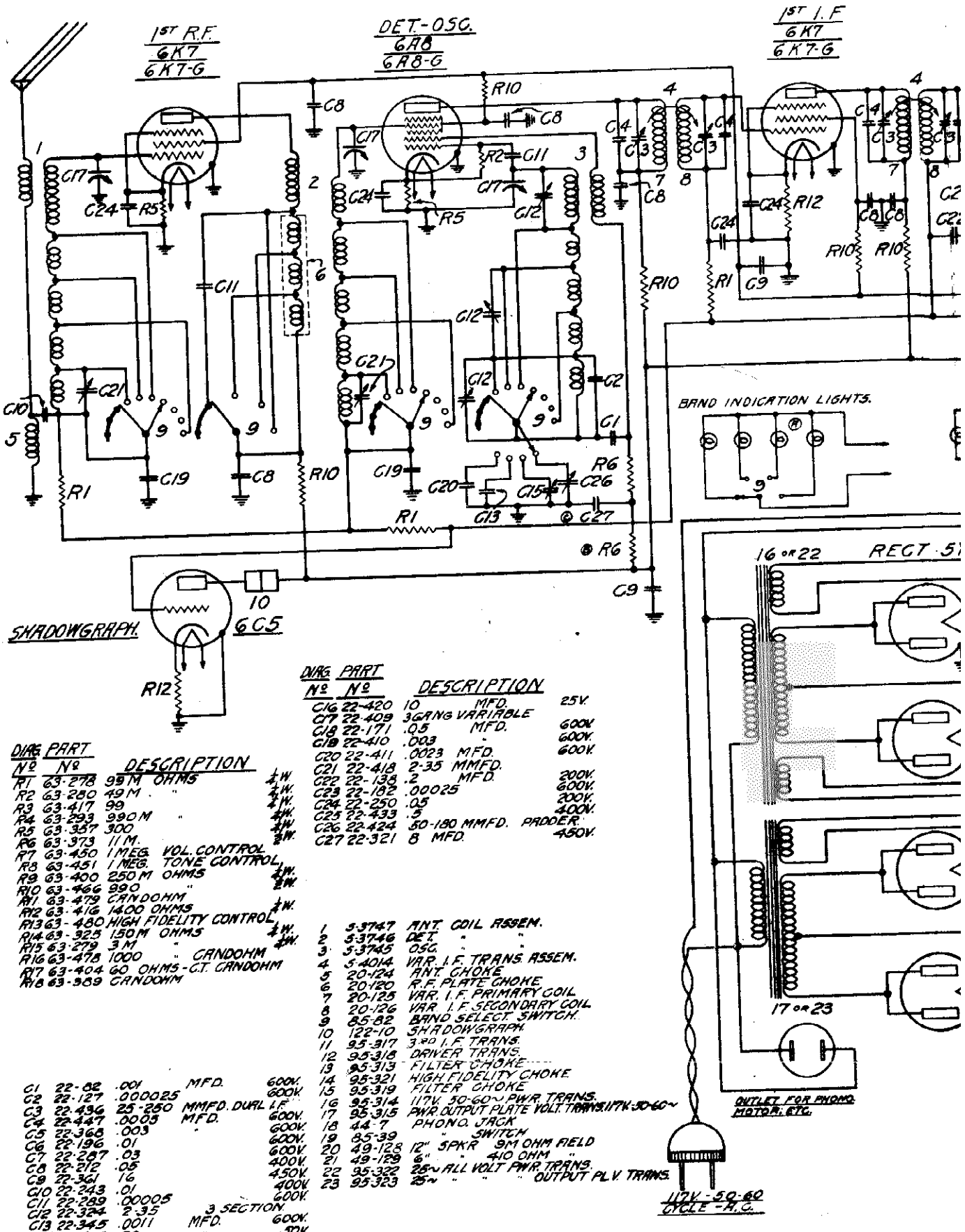

DIAG. Nº	PART Nº	DESCRIPTION	
R1	63-278	99 M OHMS	½ W.
R2	63-280	49 M "	½ W.
R3	63-417	99 "	½ W.
R4	63-293	990 M "	½ W.
R5	63-357	300 "	½ W.
R6	63-373	1 M. "	2 W.
R7	63-450	1 MEG. VOL. CONTROL	
R8	63-451	1 MEG. TONE CONTROL	
R9	63-400	250 M OHMS	½ W.
R10	63-466	990 "	2 W.
R11	63-479	CANDOHM	½ W.
R12	63-416	1400 OHMS	½ W.
R13	63-480	HIGH FIDELITY CONTROL	
R14	63-325	150 M OHMS	½ W.
R15	63-279	3 M "	½ W.
R16	63-478	1000 " CANDOHM	
R17	63-404	60 OHMS - C.T. CANDOHM	
R18	63-389	CANDOHM	

DIAG. Nº	PART Nº	DESCRIPTION	
C1	22-82	.001 MFD.	600V.
C2	22-127	.000025 "	600V.
C3	22-436	25-250 MMFD. DUAL I.F.	
C4	22-447	.0003 MFD.	600V.
C5	22-368	.003 "	600V.
C6	22-196	.01 "	600V.
C7	22-287	.03 "	600V.
C8	22-212	.05 "	400V.
C9	22-361	16 "	450V.
C10	22-243	.01 "	400V.
C11	22-289	.00005 "	600V.
C12	22-324	2-35 " 3 SECTION	
C13	22-345	.0011 MFD.	600V.
C14	22-436	20 "	50V.
C15	22-205	200-550 MMFD. PADDER.	

DIAG. Nº	PART Nº	DESCRIPTION	
C16	22-420	10 MFD.	25V.
C17	22-409	3 GANG VARIABLE	
C18	22-171	.05 MFD.	600V.
C19	22-410	.003 "	600V.
C20	22-411	.0023 MFD.	600V.
C21	22-418	2-35 MMFD.	
C22	22-138	.2 MFD.	200V.
C23	22-182	.00025 "	600V.
C24	22-250	.05 "	200V.
C25	22-433	.5 "	400V.
C26	22-424	50-180 MMFD. PADDER	
C27	22-321	8 MFD.	450V.

1	5-3747	ANT. COIL ASSEM.
2	5-3746	DET. " "
3	5-3745	OSC. " "
4	5-4014	VAR. I.F. TRANS. ASSEM.
5	20-124	ANT. CHOKE
6	20-120	R.F. PLATE CHOKE
7	20-125	VAR. I.F. PRIMARY COIL
8	20-126	VAR. I.F. SECONDARY COIL
9	85-82	BAND SELECT SWITCH.
10	122-10	SHADOWGRAPH.
11	95-317	3RD I.F. TRANS.
12	95-318	DRIVER TRANS.
13	95-313	FILTER CHOKE
14	95-321	HIGH FIDELITY CHOKE
15	95-319	FILTER CHOKE
16	95-314	117V. 50-60~ PWR. TRANS.
17	95-315	PWR. OUTPUT PLATE VOLT. TRANS. 117V. 50-60~
18	44-7	PHONO. JACK
19	85-39	" SWITCH
20	49-128	12" SPKR 9M OHM FIELD
21	49-129	6" " 410 OHM "
22	95-322	25~ ALL VOLT PWR. TRANS.
23	95-323	25~ " " " OUTPUT PL.V. TRANS.

DIO CORP.

MODELS 16-A-61, 16-A-63
Stratosphere
Chassis 1601-C, 1601-P
Schematic, Parts

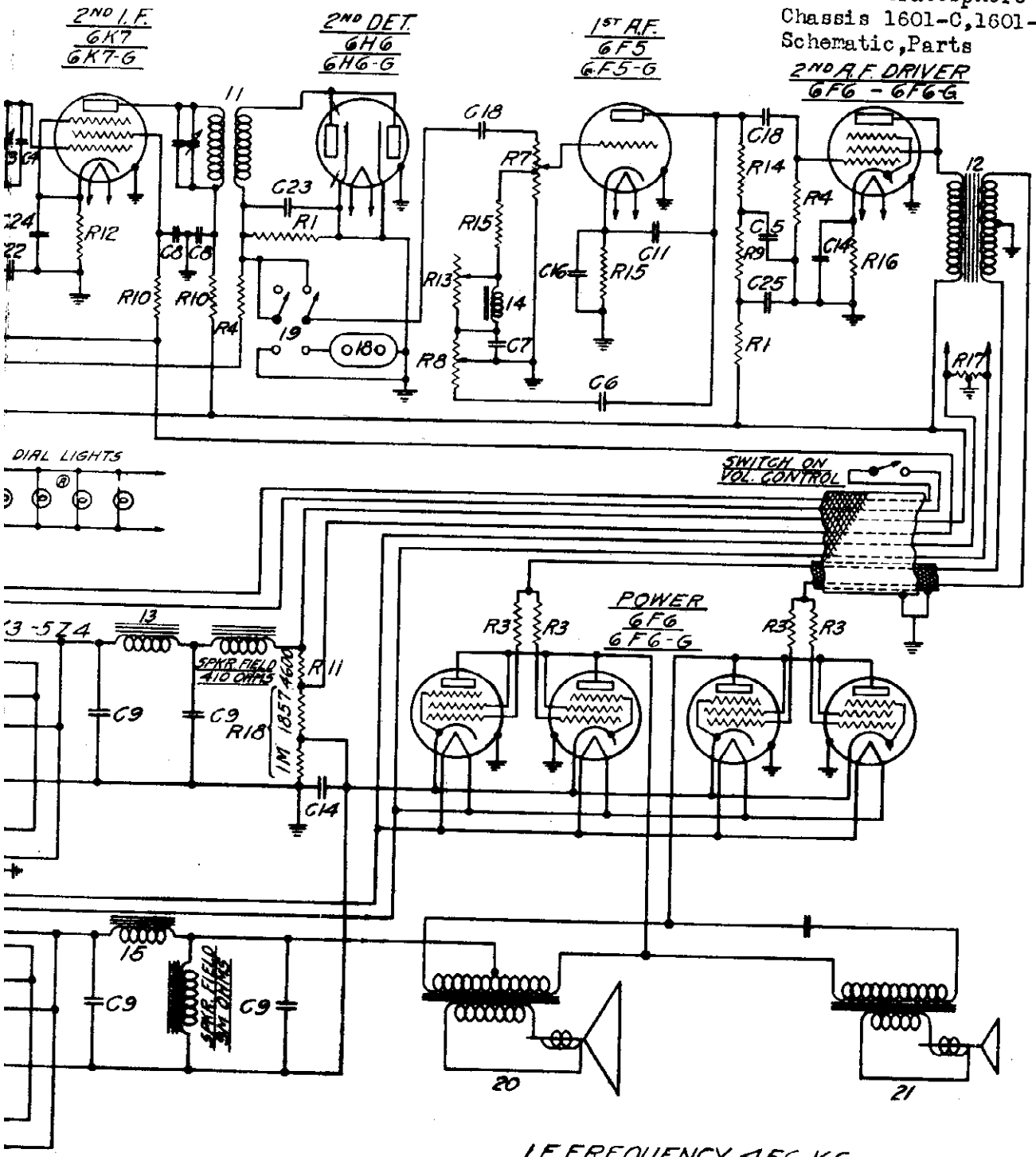

I.F. FREQUENCY 456 K.C.
16 TUBE SUPERHETERODYNE
CHASSIS Nº 1601-C & 1601-P.
MODELS 16-A-61 - 16-A-63

7-16-35 W.D.

MODELS 215,216,225
Chassis 2044
Schematic

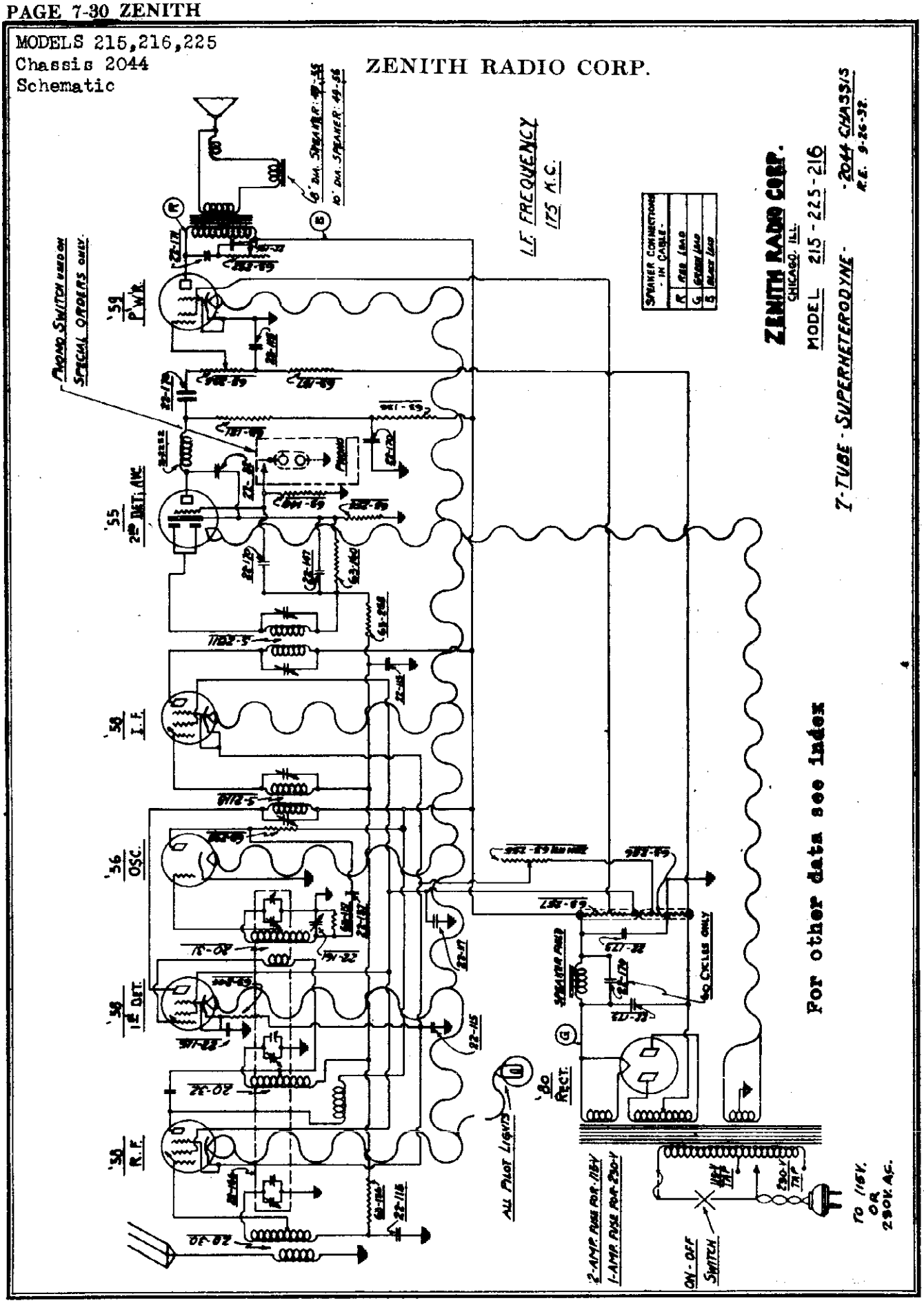

©John F. Rider, Publisher

MODELS-663,664
Chassis 5510
Schematic, Socket
Trimmers, Parts

ZENITH RADIO CORP.

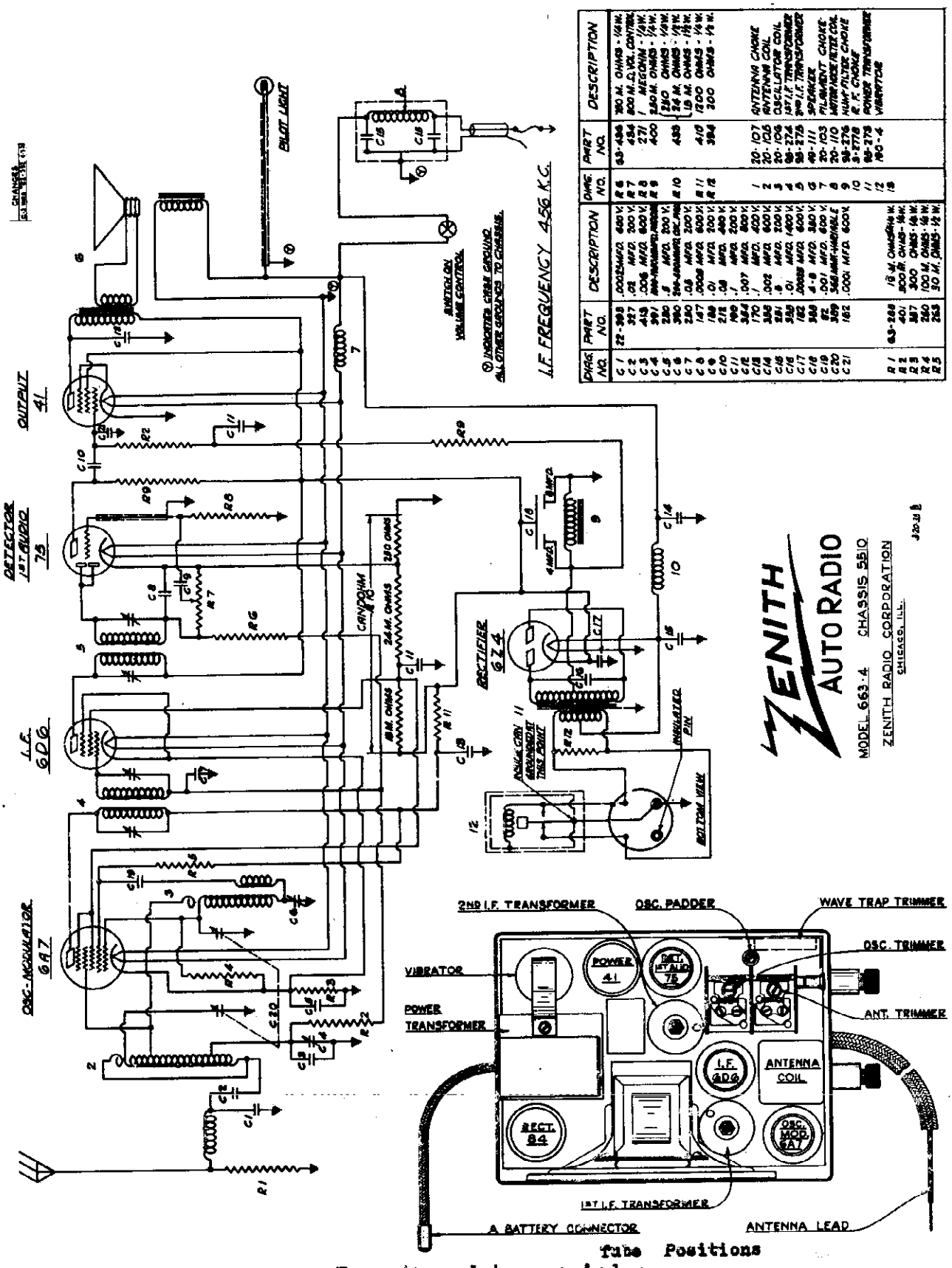

DIAG. NO.	PART NO.	DESCRIPTION	DIAG. NO.	PART NO.	DESCRIPTION
C 1	22-393	.0025MFD. 600 V.	R 6	53-434	150 M. OHMS - 1/4 W.
C 2	327	.02 MFD. 200 V.	R 7	434	800 M.Ω. VOL. CONTROL
C 3	413	.006 MFD. 600 V.	R 8	271	1 MEGOHM - 1/4 W.
C 4	391	.006 MFD. 600 V.	R 9	400	250 M. OHMS - 1/4 W.
C 5	220	.5 MFD. 200 V.	R 10	433	2.5 M. OHMS - 1/4 W.
C 6	390	.05 MFD. 200 V.	R 11		1.5 M. OHMS - 1/4 W.
C 7	230	.05 MFD. 200 V.	R 12	419	1200 OHMS - 1/4 W.
C 8	147	.0009 MFD. 600 V.		384	300 OHMS - 1/4 W.
C 9	188	.01 MFD. 200 V.			
C 10	218	.05 MFD. 400 V.			
C 11	190	.1 MFD. 200 V.			
C 12	384	.001 MFD. 600 V.		20-107	ANTENNA CHOKE
C 13	170	.1 MFD. 400 V.		20-105	ANTENNA COIL
C 14	358	.002 MFD. 600 V.		20-106	OSCILLATOR COIL
C 15	231	.1 MFD. 200 V.		53-274	1ST I.F. TRANSFORMER
C 16	358	.01 MFD. 1400 V.		53-275	2ND I.F. TRANSFORMER
C 17	182	.0009 MFD. 600 V.		46-111	SPEAKER
C 18	368	4-8 MFD. 350 V.		20-103	FILAMENT CHOKE
C 19	82	.001 MFD. 600 V.		20-110	WATER HEATER COIL
C 20	369	3&8 MFD. HANDLE		53-276	HUM FILTER CHOKE
C 21	182	.0001 MFD. 600 V.		5-2778	R. F. CHOKE
				53-278	POWER TRANSFORMER
R 1	53-288	15 M. OHMS - 1/4 W.		180-4	VIBRATOR
R 2	401	800 M. OHMS - 1/4 W.			
R 3	387	300 OHMS - 1/4 W.			
R 4	260	100 M. OHMS - 1/4 W.			
R 5	253	30 M. OHMS - 1/2 W.			

Tube Positions

For other data see index

©John F. Rider Publisher

MODELS A,B,C,D,Zenette
Changes
MODELS 250,260,272
Alignment,Voltage

Zenith A, B, C, D, Zenette

Several changes have been made in the improved chassis 2004, which is used in these models. These changes are shown in the accompanying schematic; only a portion of which is shown, as the remainder is the same as the early model.

If you will compare this with the original schematic (see *Zenith page 1-26 in the revised edition; *674-C in the early edition, and page* 2722 *in the Rider-Combination*), it will be seen that the green wire connecting the long antenna terminal to the center tap on the antenna coil, now goes to a condenser, Part No. 22-104, having a value of 0.0001 mf. The other side of this condenser is connected now to one side of the volume control, Part No. 63-141. The other side of the volume control is now connected to the 400-ohm resistor (Part No. 63-131) in the cathode circuit of the first 24, instead of to ground.

The 50,000-ohm resistor (Part No. 63-136) has been added in the screen grid circuits of the first two tubes. Also the 0.1-mf. condenser, across the choke in the power supply circuit, has been added in those receivers using 60-cycle supply. This condenser is omitted in 25-cycle sets and the condenser shown dotted is used instead; the value is 2 mf. (Part No. 22-84).

ZENITH RADIO CORP.

Zenith Values

Some of the Zenith wiring diagrams in the early Rider Manuals do not show the electrical equivalents for certain parts numbers. While it is true that these receivers are quite old, we feel certain that this information will be found valuable.

Zenith 430, 440

Below will be found the voltage readings for these models, the schematic of which appears in *Rider's Volume III on Zenith page 3-7 and in the Rider-Combination Manual on page 2737.*

Tube	Position	Plate	Cath.	Screen	Suppr.	Plate Current
Z-58	1st R.F.	175	2.2	75	2.2	5.7
Z-58	1st Det.	190	4.5	75	4.5	2.3
Z-56	Osc.	100	0	—	—	3.5
Z-58	1st I.F.	200	2.2	75	2.2	5.5
Z-56	2nd Det.	110	10	—	—	0.3
Z-56	1st A.F.	170	80	—	—	0.8
Z-57	A.V.C.	—	-85	—	-85	—
Z-57	Q.A.V.C.	30	13	75	13	—
Z-59	Driver	190	20	190	190	13
Z-59	Power	195	-70	195	195	22
Z-80	Rect.	360	—	—	—	65

The filament voltage for all tubes, except the rectifier, is 2.5; that of the 80 is 5.0 volts.

Balance the i-f. stage at 175 kc. Condenser gang at 1500 kc. and oscillator padder at 600 kc.

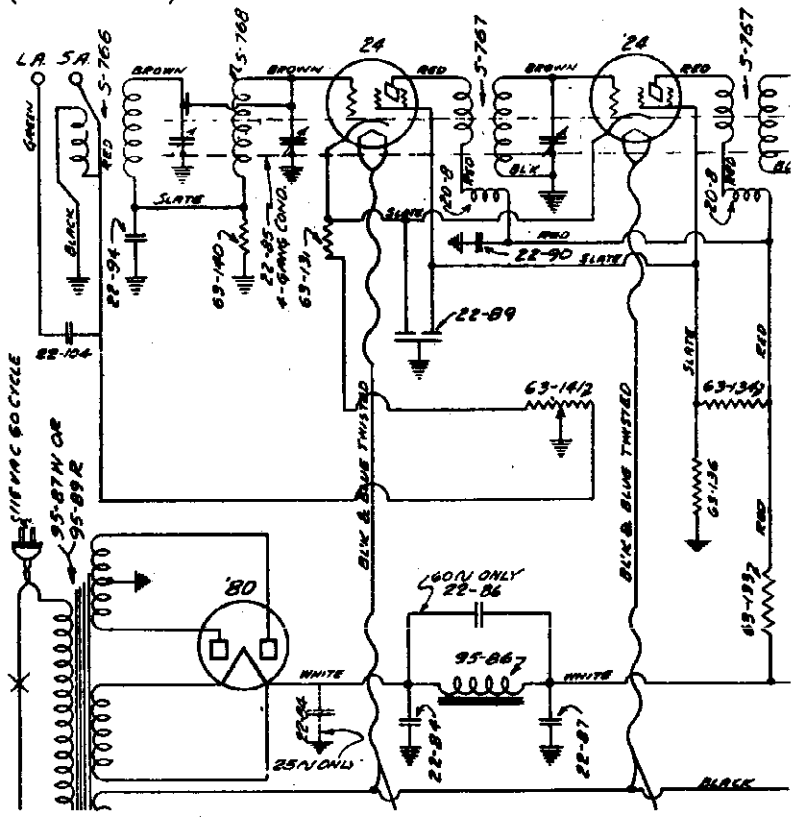

Partial schematic diagram of Zenith A, B, C, D Zenette showing changes in improved chassis 2004

Voltage Socket, Trimmers MODELS 430,440

Parts	Number	Value	Parts	Number	Value
22-21	.00025	mfd.	63-31	.35	ohm
-23	1.	mfd.	-66	10.	ohms
-27	1.	mfd.	-67	600	ohms
-38	.001	mfd.	-68	2000	ohms
-40	9.	mfd.	-69	2700	ohms
-41	11.	mfd. block	-70	22500	ohms
-42	1.	mfd.	-71	1600	ohms
-43	.25	mfd.	-72	22500	ohms
-44	1.	mfd.	-80	200	ohms
-46	16.	mfd.	-96	10000	ohms
-48	19.	mfd. block	-98	10	ohms
-49	10.	mfd. block	-99	30	ohms
-59	10.5	mfd. block	-100	20	ohms
-61	36.	mfd. Mersbon	-101	50	ohms
-64	.03	mfd.	-106	25000	ohms
-65	1.	mfd.			
-66	.2	mfd. quadruple			
-67	1.5	mfd.			
-69	1.	mfd. double			
-70	.001	mfd.			
-71	1.	mfd.			
-72	1.	mfd.			
-73	16.	mfd.			

Zenith 250, 260, 272

Below will be found the socket layout for these models, the schematic for which appears on the following pages in *Rider's Manuals: Zenith* 3-6 *and* 2734 *in the Rider-Combination Manual.*

Socket Voltages

Tube	Position	Plate	Cathode	Screen	Suppressor	Plate MA.
58	R.F.	240	4	110	4	6.2
24	1st Det.	235	8	110	–	.5
57	S-W. 1st Det.	235	6	150	6	.5
27	S-W. Osc.	150	10	—	–	5.
27	Osc.	110	0	—	–	9.
58	I.F.	235	3	110	3	8.
27	2nd Det.	35	4	—	–	1.8
47	O.P.	215	—	230	–	28.
80	Rect.	110 each to ground				34. each

All controls maximum. Line—115 volts. Filament voltage of all tubes 2.4, with exception of 80, which is 5 volts.

Alignment Data:

Broadcast band. I-f. peak is 175 kc. Tuning condenser (three rear sections) 1500 kc. Oscillator padder 600 kc.

S-W. band. Set 1000 kc. adjustment shaft to the center of its tuning range and balance s-w. i-f. trimmers (1, 2, and 3) to 1000 kc. with s-w. oscillator

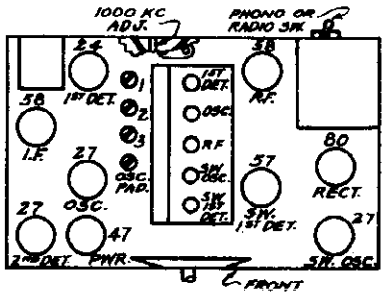

Locations of trimmers and tubes of the Zenith Models 250, 260, and 272.

tube removed. Insert tube and place s-w. tuning on scale by adjusting s-w. oscillator trimmer on condenser gang until a station on the 1.5 to 3.75-mc. band is resonated at its corresponding frequency on the dial.

©John F. Rider, Publisher

MODEL NT
MODEL 8J
Schematics
Voltage

ZEPHYR RADIO CO.

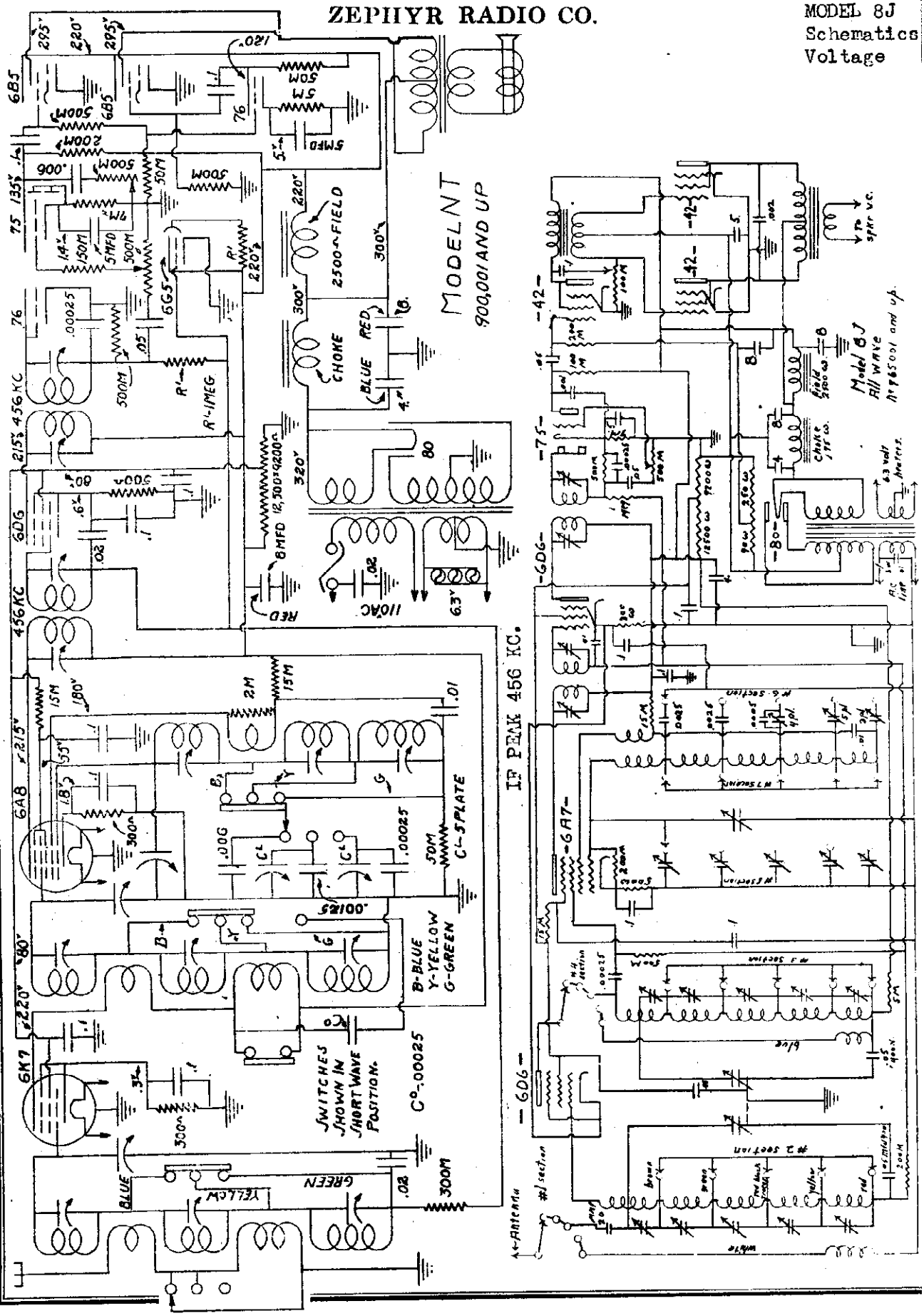

©John F. Rider, Publisher

MODEL P
MODEL Y
Schematics
Voltage

ZEPHYR RADIO CO.

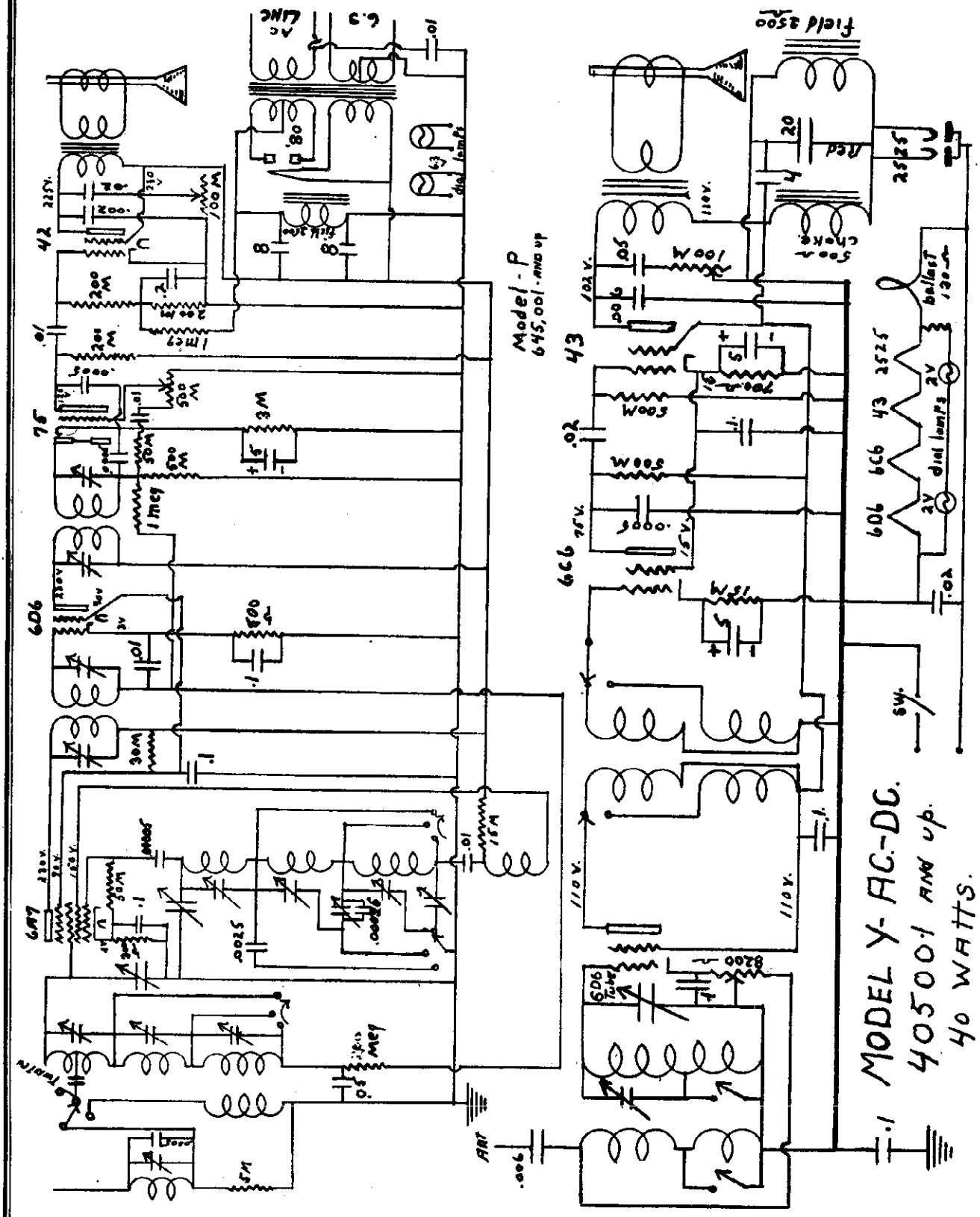

©John F. Rider, Publisher

A B C RADIO LABORATORIES
COLIN B. KENNEDY
TURNER CO.

MODEL 100
MODEL 1000
MODEL G
Schematics

FREQUENCY CONVERSION
RANGE 1500-2600 K.C.

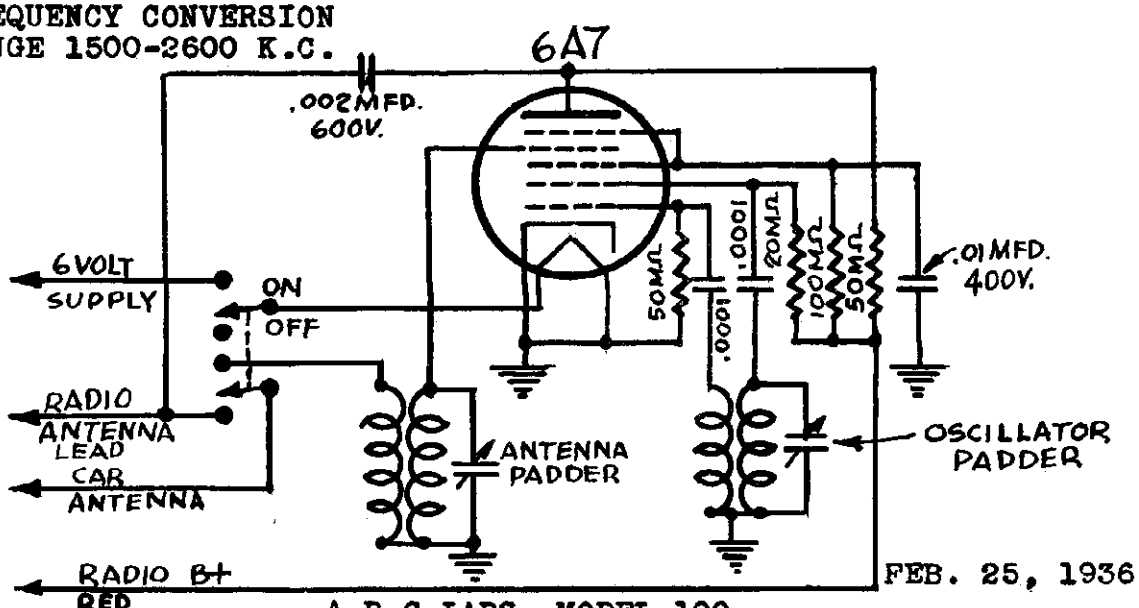

FEB. 25, 1936

A B C LABS. MODEL 100
Police Converter

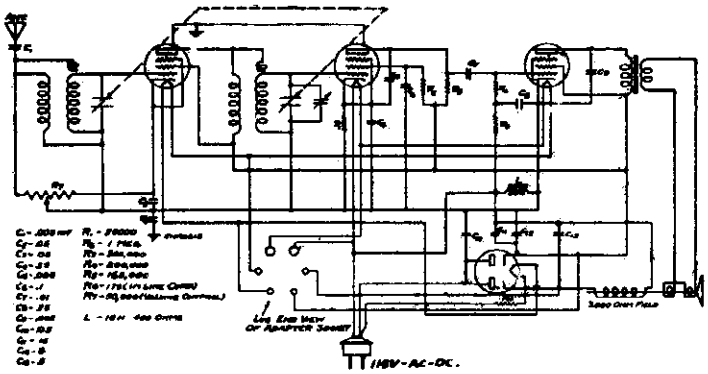

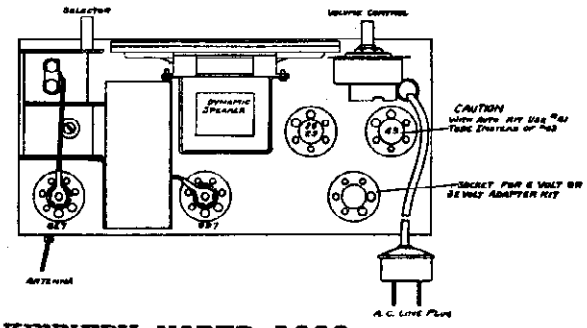

KENNEDY MODEL 1000

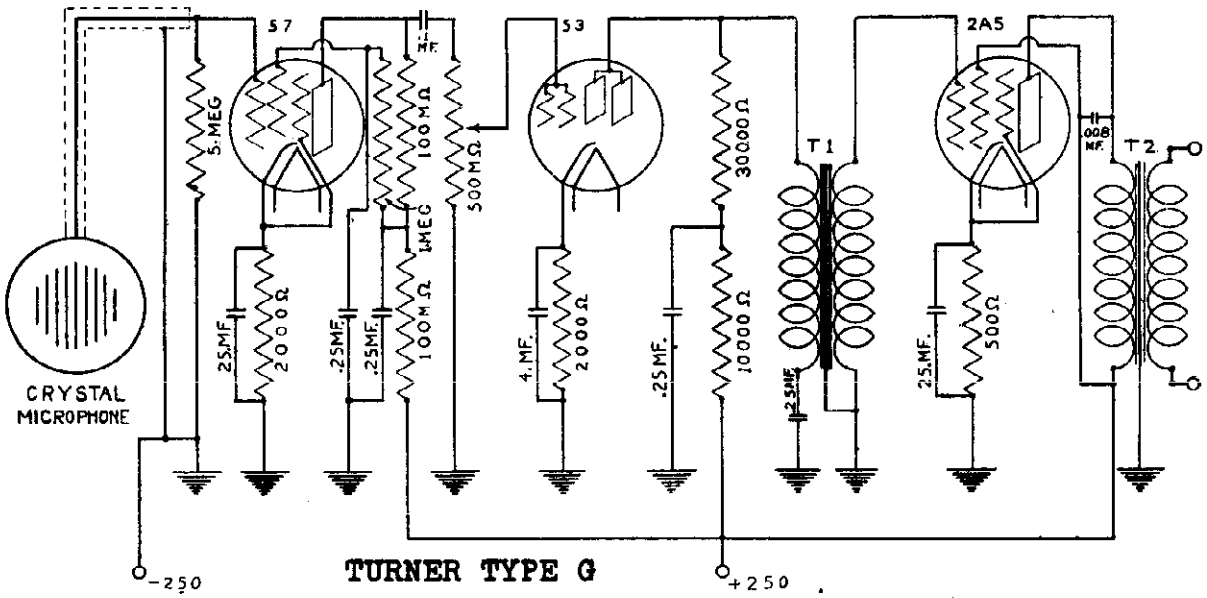

TURNER TYPE G

©John F. Rider, Publisher

MODEL 101
MODEL 1000
Schematics

ARIEL RADIO INC.

VAN DYKE

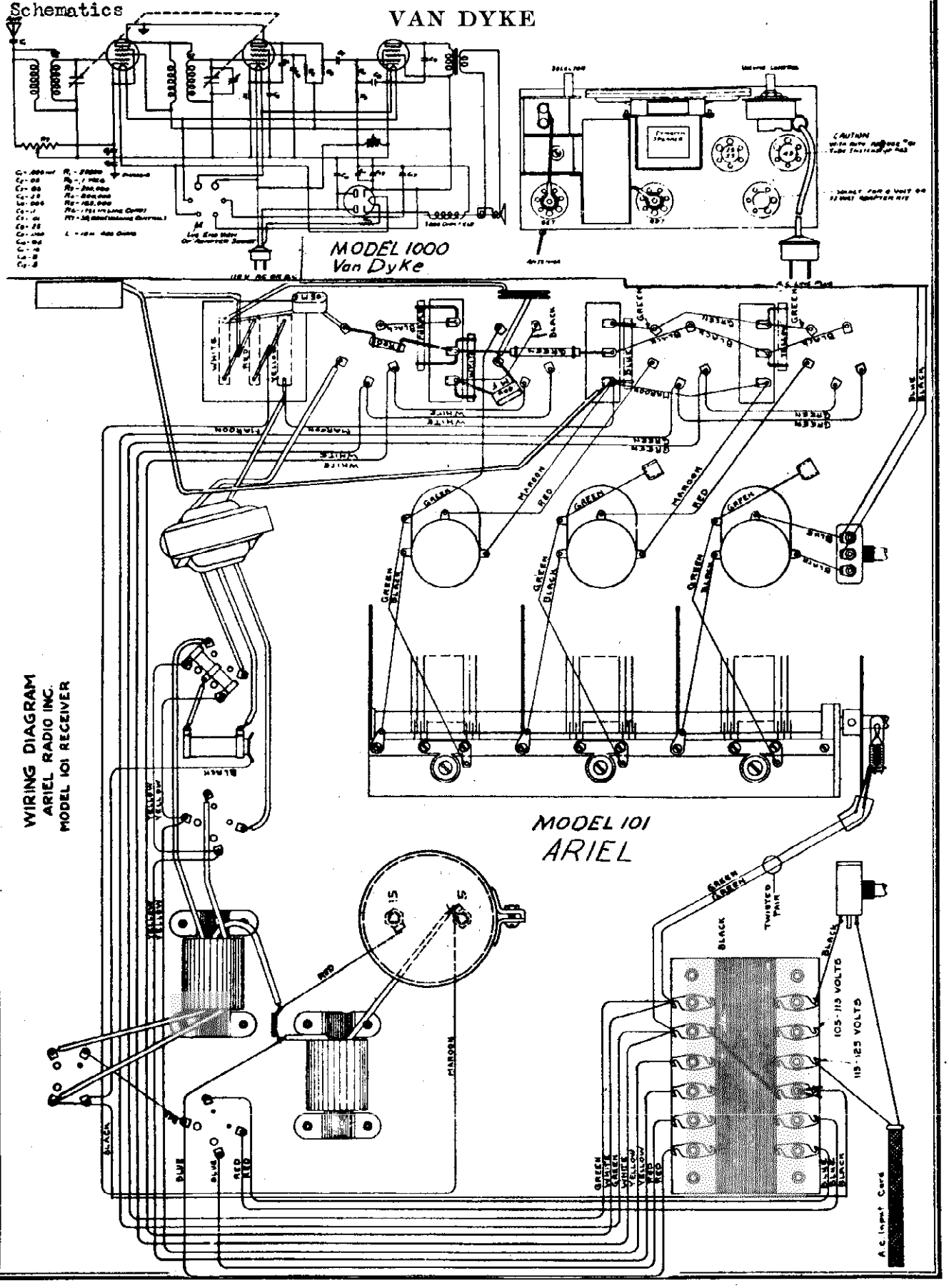

©John F. Rider, Publisher

MODELS 14,21,31
SPU Chassis
Schematics

BRUNSWICK RADIO CORP.

MODELS 14,21,31,81,82
R-F.Chassis
Schematic

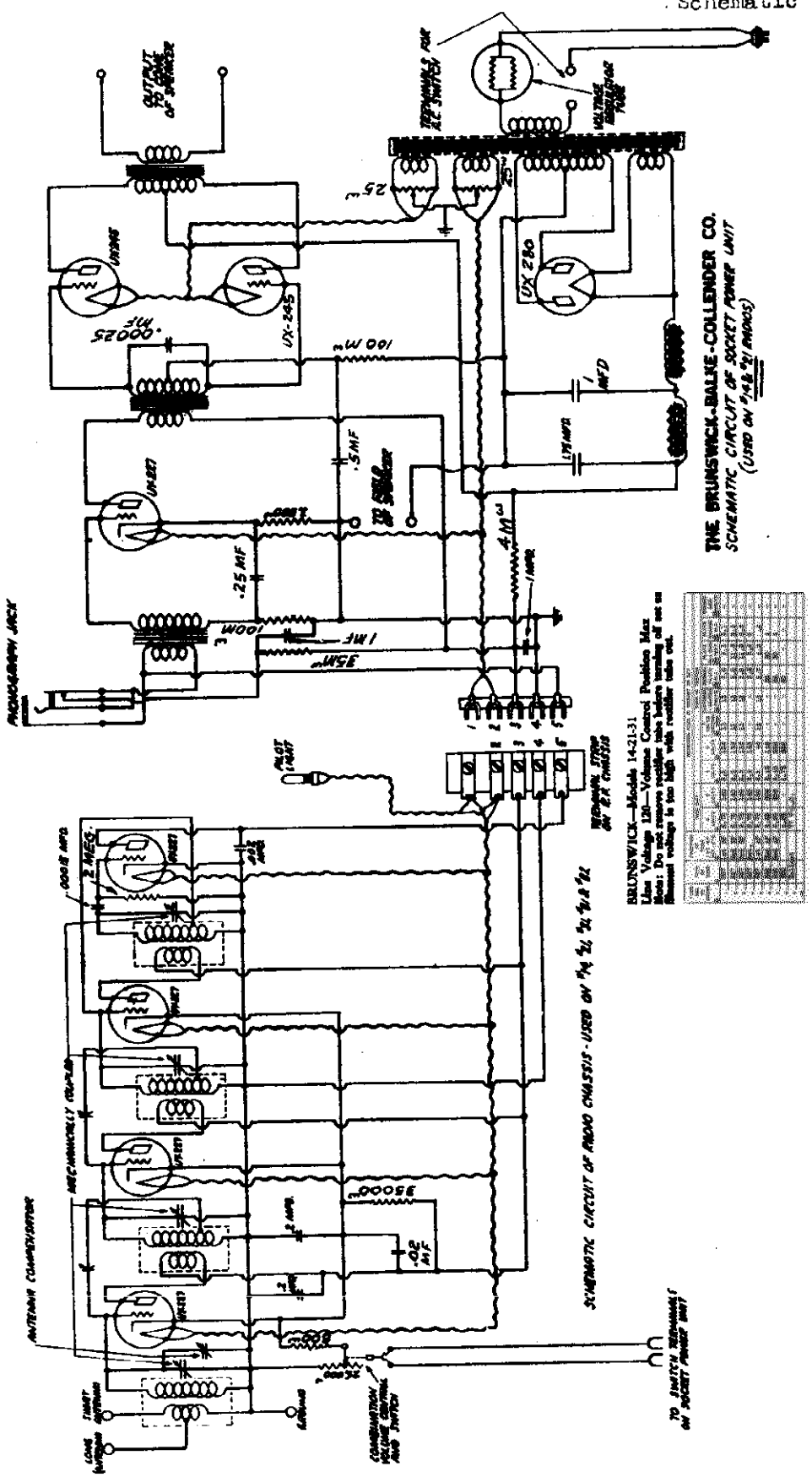

SPU of Model 31 is the same as SPU of Models 14 and 21, except that a phonograph pickup and motor have been incorporated.

©John F. Rider, Publisher

MODELS 227,245 AC
Schematic

BUCKINGHAM RADIO CORPORATION

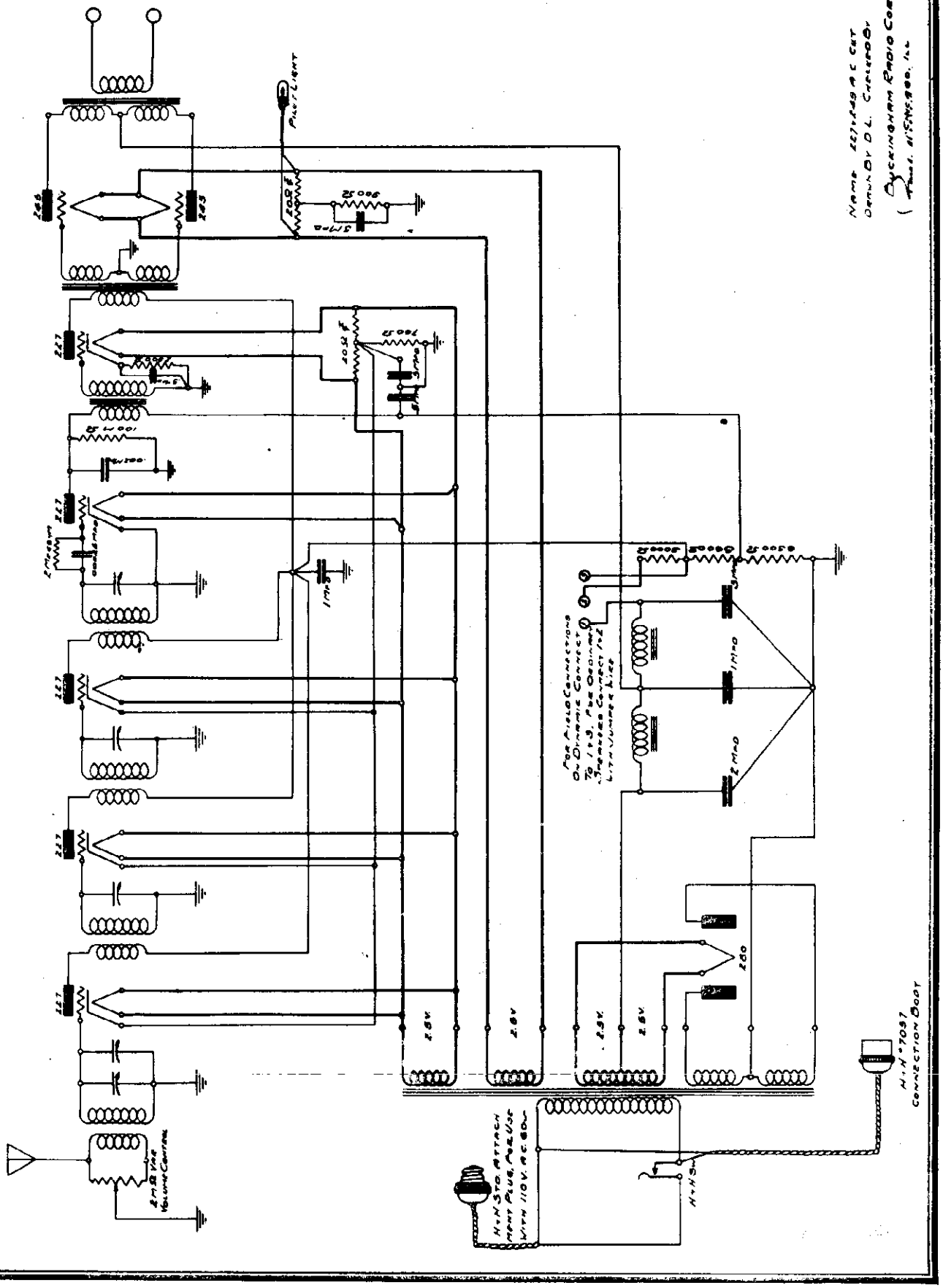

© John F. Rider, Publisher

ELECTRAD, INC.

MODEL E-450 Amplifier
Schematic

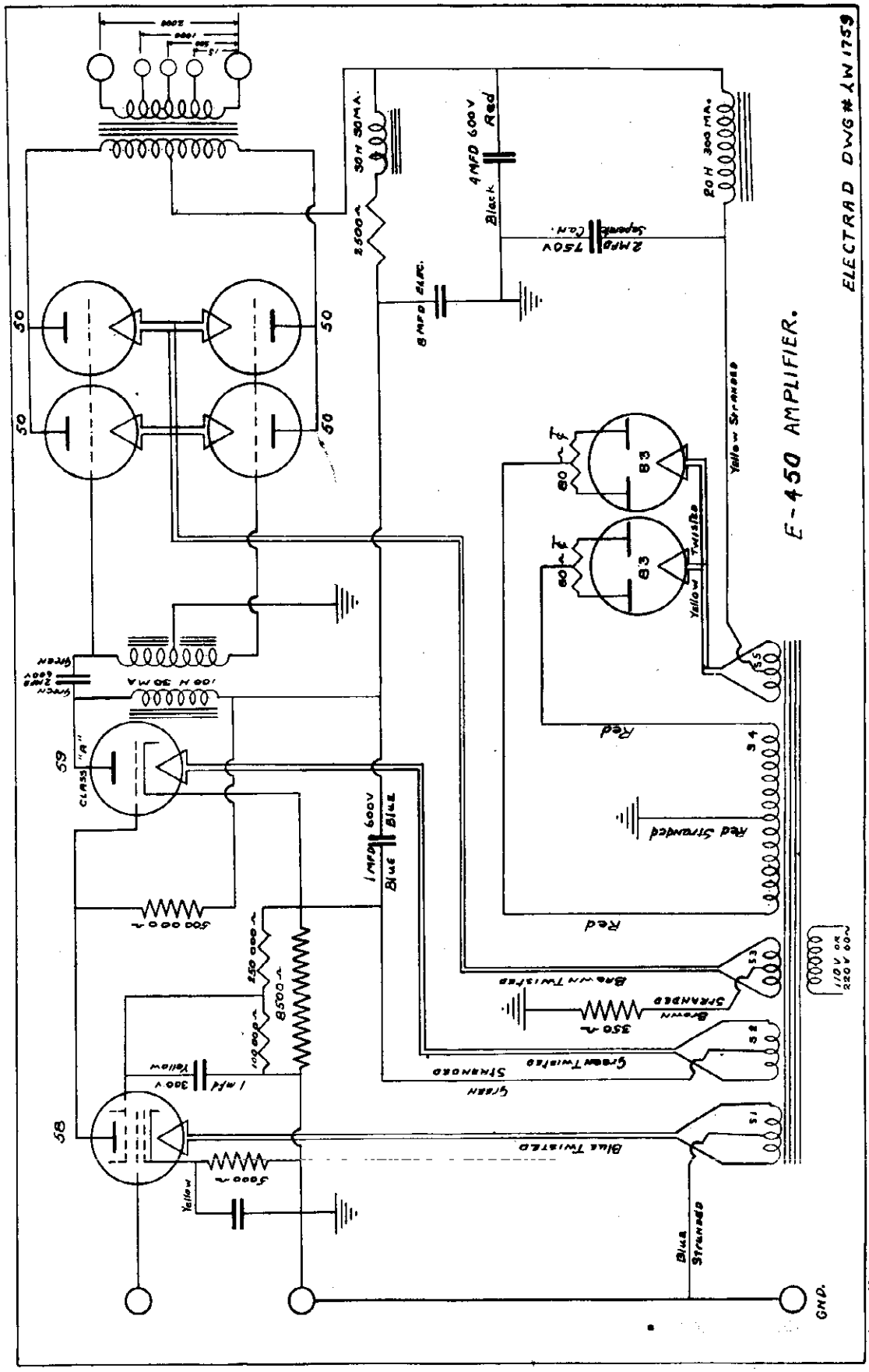

©John F. Rider, Publisher

MODEL 674
Schematic
Trimmers, Alignment

ESPEY MFG. CO., INC.

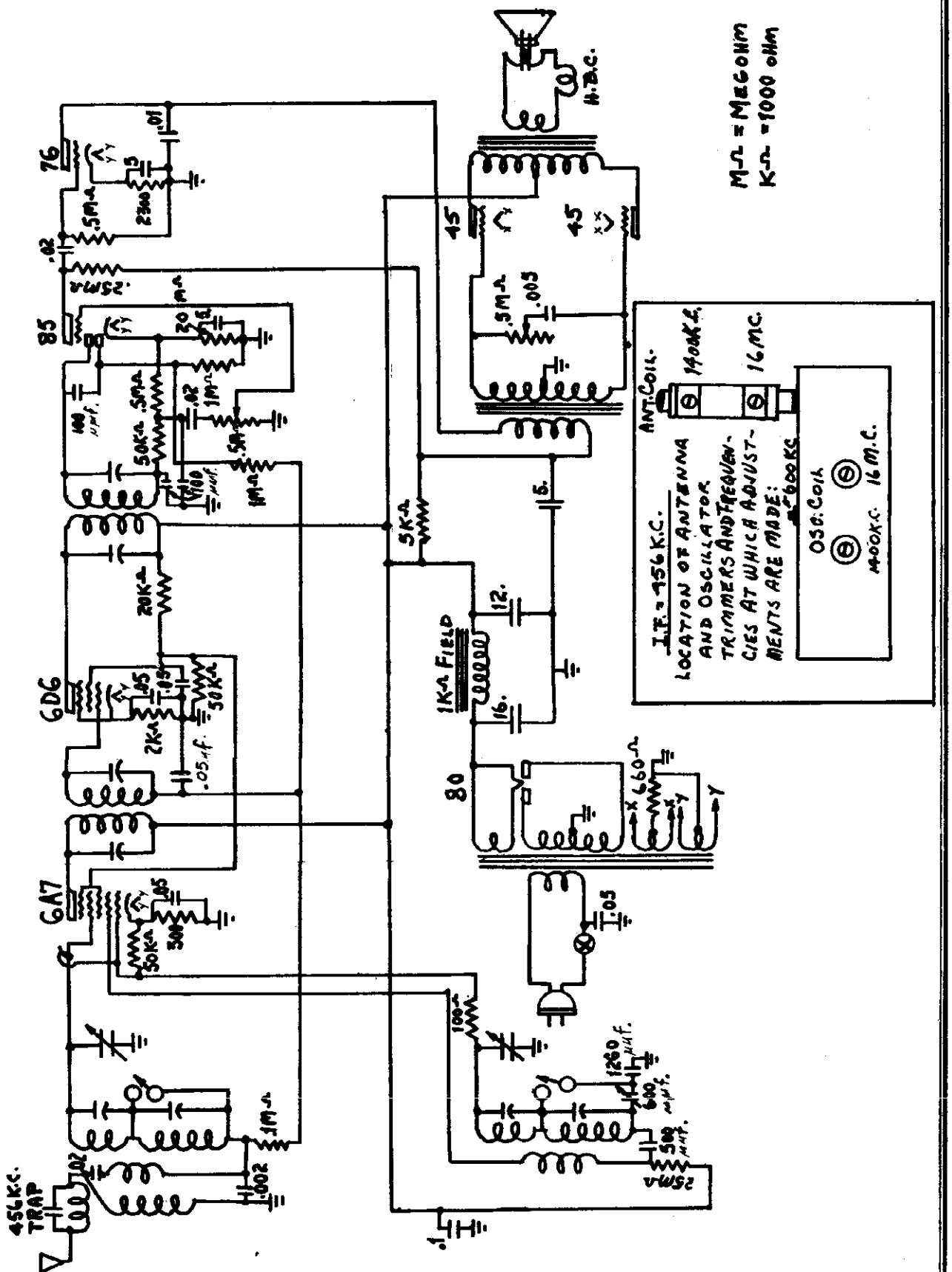

©John F. Rider, Publisher

MODEL 40-B Amplifier
MODEL 40-C Amplifier
Schematics

GATES RADIO & SUPPLY CO.

MODEL B-100 Amplifier
MODEL P-1 SPU
MODEL 120-B Amplifier
MODEL 125-P SPU

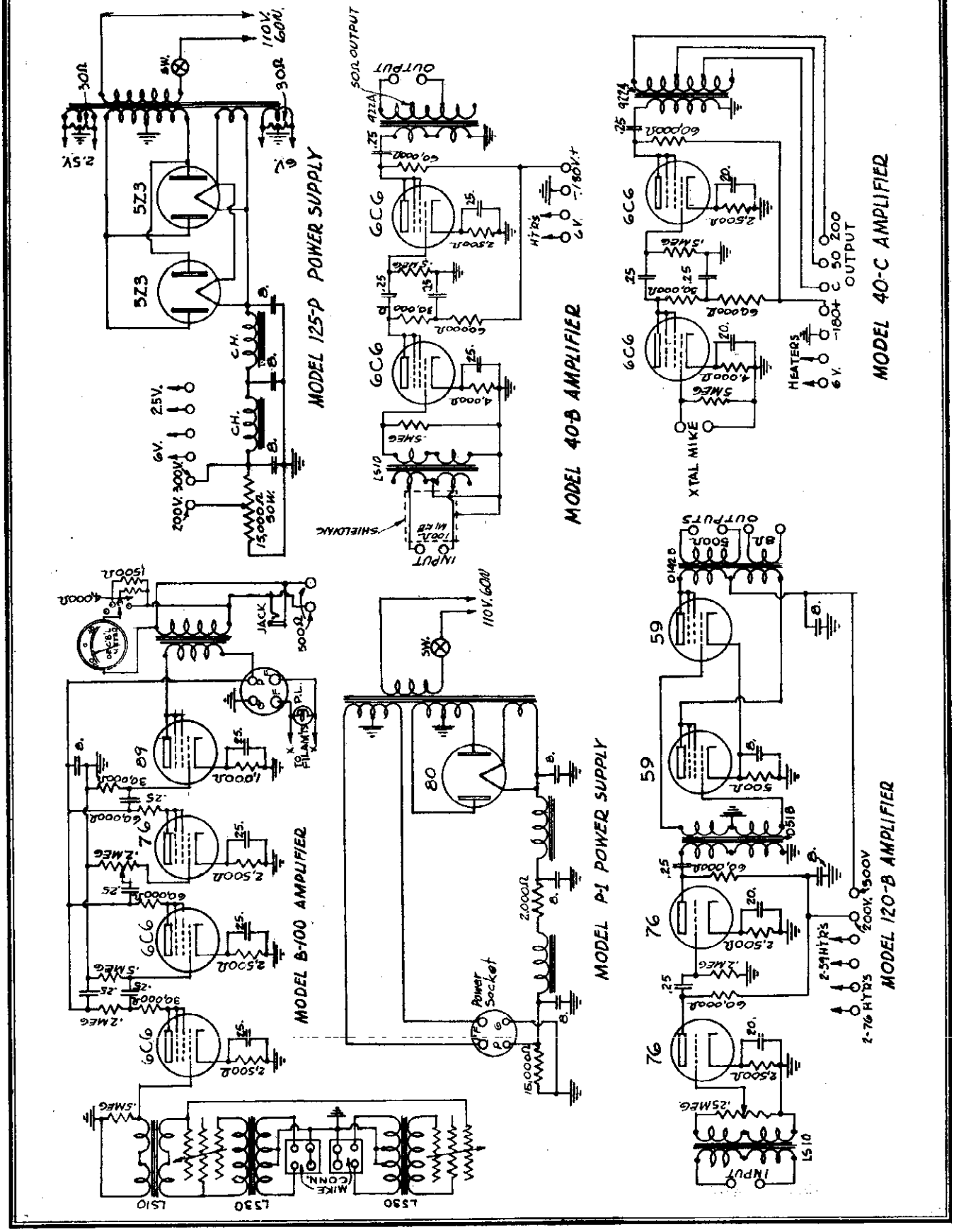

©John F. Rider. Publisher

MODEL L-44-T
MODEL L-55-T
Schematics

LAUREHK MFG. CO.

1937 4 Tube "MUSIQUE" TRF Receiver MODEL L-44-T

Frequency Ranges, 1600KC to 540KC, and 1600KC to 4500KC.

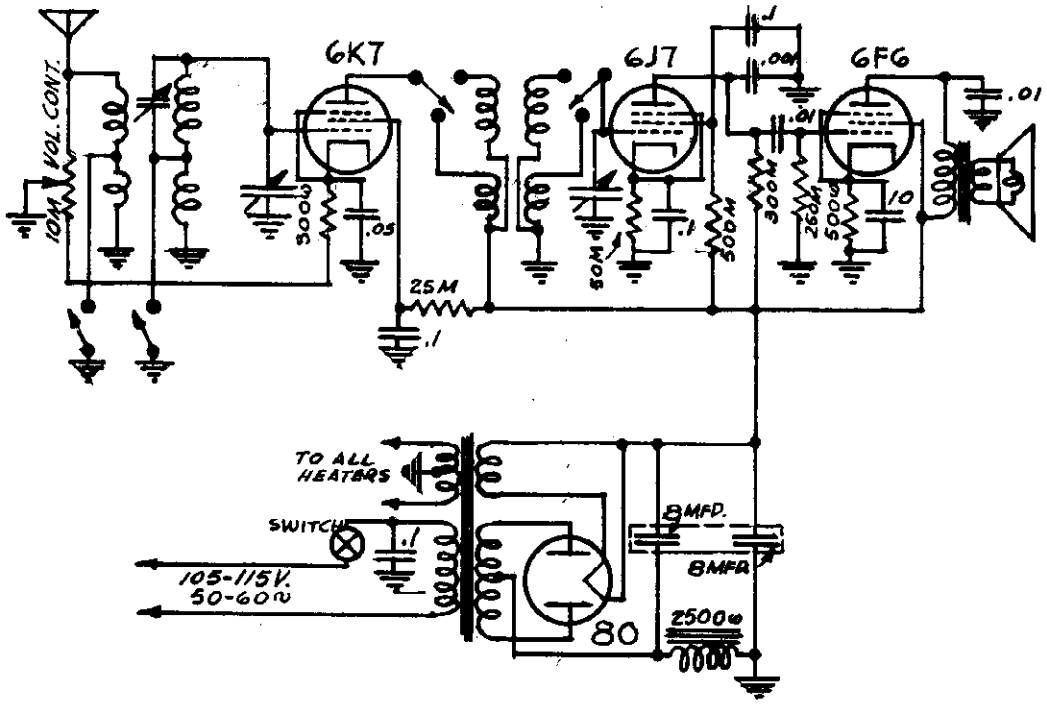

1937 5 Tube "MUSIQUE" TRF Receiver MODEL L-55-T

Frequency Ranges, 1600KC to 540KC, and 1600KC to 4500KC.

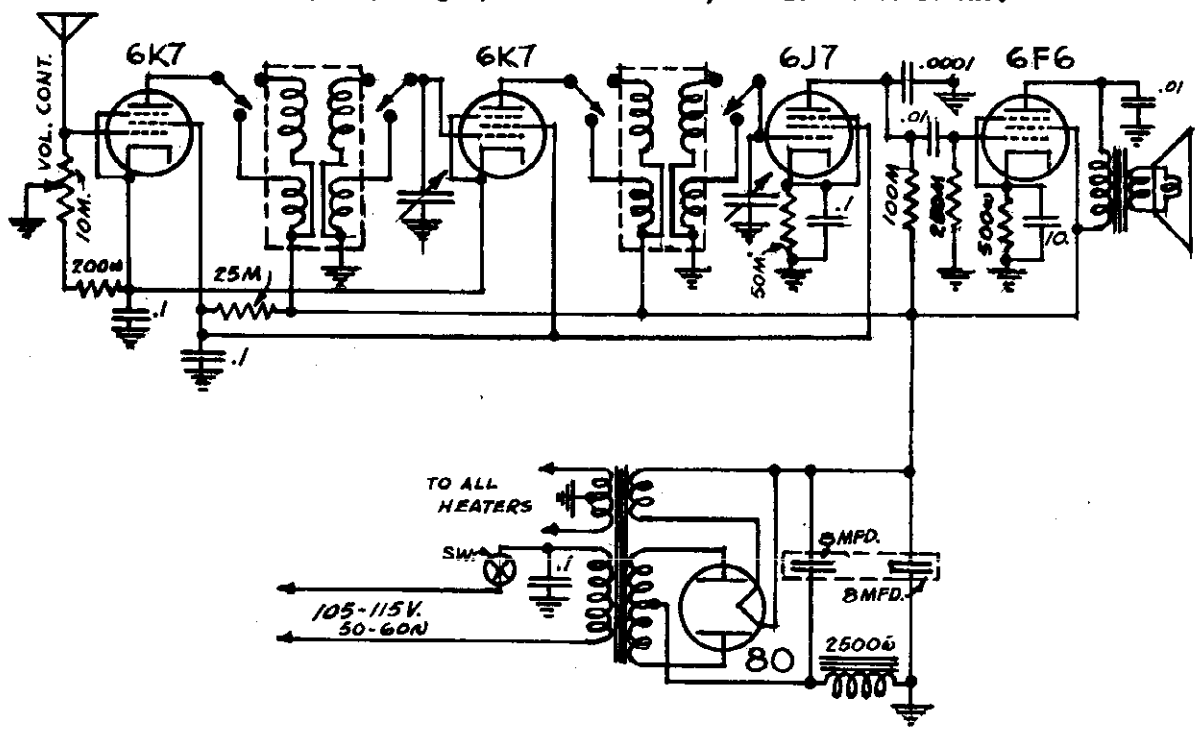

©John F. Rider, Publisher

MONARCH
E. M. SARGENT CO.

MODEL 10
Schematic, Notes
MODEL 1000
Schematic, Socket

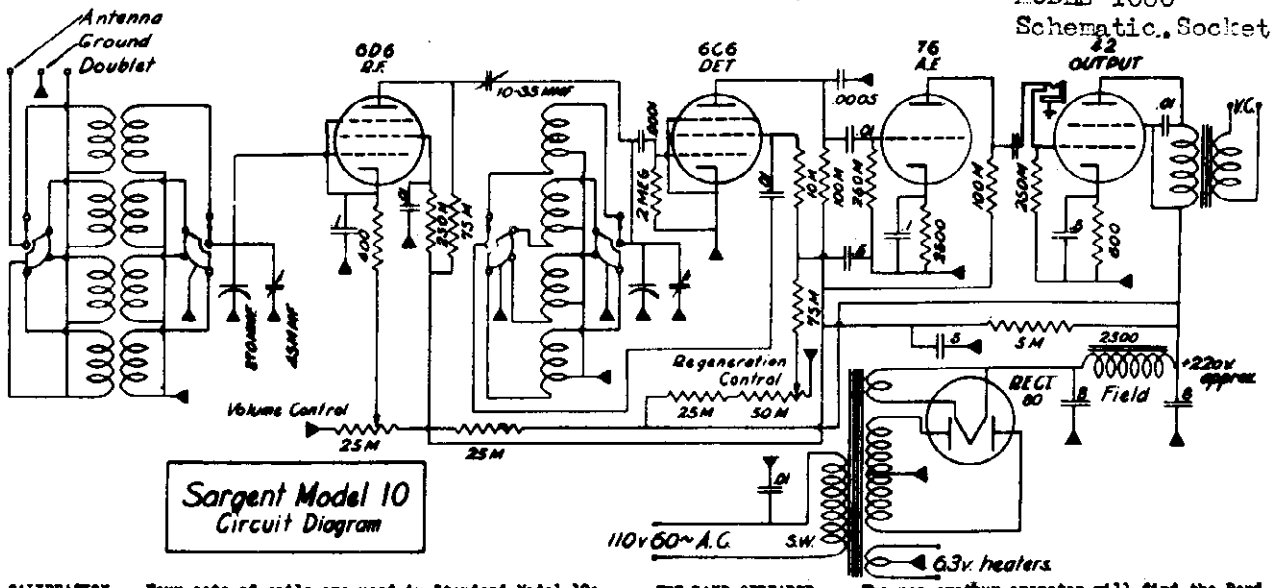

Sargent Model 10 Circuit Diagram

CALIBRATION. Four sets of coils are used in Standard Model 10s, five sets in Marine Models. The escutcheon on the Wave Changing Switch gives the Megacycle coverage of each band and the Main Tuning Dial shows approximate dialings for frequencies within each band. The bands on the tuning dial are labelled the same as the Wave Changing Switch, so as to facilitate locating the proper scale. The 12-4.3 M.C. and 4.4-1.5 M.C. scales are above the center of the dial, the 20-12 M.C. and 1.6-.54 M.C. (Broadcast Band) below. The top edge of the dial has a standard 0-100 degree scale for use on extra bands and for accurate logging. For details of Band Spread dial calibration, see Band Spreader paragraph, below.

The Antenna Trimmer is to keep the r. f. stage resonant with the detector. Its position will vary somewhat for different dial settings and a careful operator will always check its adjustment on each signal. The right setting is the point at which maximum signal is heard. Two such points may be found if the Trimmer knob is rotated over the entire scale. They are identical,- use either.

When Regeneration is too far advanced (to right) the receiver will oscillate at the resonant Trimmer setting. This makes it difficult to determine the proper Trimmer setting, and a much simpler way to set it right is to proceed as follows. Turn Regeneration and Volume all the way on and set Wave Change Switch at some band other than broadcast, say the 4.4-1.5 M.C. Band. Set the tuning condenser at about 70 degrees on the top scale. Then turn the Trimmer rapidly over a wide arc. A "click" or "thump" should be heard in the speaker. Now place one hand on Regeneration Control and the other on the Trimmer. Keep turning the Trimmer rapidly back and forth across the "click" point, meanwhile gradually reducing Regeneration by turning this control slowly to the left. A point will be reached where the Trimmer will no longer cause a click but instead will bring in a light background hiss. This indicates sensitivity, and means that both Trimmer and Regeneration are at their proper settings. Now turn Main Tuning Dial until signals are heard, then check Trimmer setting on the signals. If a "squeal" is heard on the signal, there is too much regeneration. Always keep regeneration near the "hiss" point.

THE BAND SPREADER. The non-amateur operator will find the Band Spreader useful mainly as a vernier for tuning in short wave stations. For use in this way, set the Band Spread Dial with the needle vertical (at 50). An equal amount of adjustment to right and left will then be obtainable. Short wave stations can be located with Main Tuning Dial, then accurately centered with the Band Spreader.

To the amateur, we offer a receiver having an accurate calibration of the amateur bands. Note that on the dial the letters (A), (B), or (C) appear alongside the meter marking for the band. These letters refer to adjustments which can be made on the Band Spreader cam arm in the rear of the set. Remove the back of the receiver, and note the mechanical action of the Band Spreader. The Band Spread Dial drives a pivot that lifts the tuning condenser extension arm up and down. There are three threaded holes in the cam arm in which the pivot screw with its bakelite washer assembly may be fastened. The one nearest the dial shaft, or center of rotation is "A", the center hole is "B" and the outside one "C". All receivers are shipped with the pivot on "B", which is best for vernier purposes and fits the 40 and 75 meter bands. The operator can easily change it if one of the other adjustments is desired.

HOW TO GET AN ABSOLUTELY ACCURATE SETTING ON THE BAND SPREADER. Suppose your Xtal is ground for 7050 K.C. (7.05 M.C.) With the pivot on adjustment "B", set the Band Spread Dial on the mark between 7.0 and 7.1 M.C. The Wave Change Switch, of course, should be on the 12-4.3 M.C. Band. Then, with the Main Tuning Dial, tune in the vicinity of 7 M.C. until your own transmitter frequency is picked up. This will give the proper "tank" setting to make the Band Spreader read accurately on this band. The same procedure would of course be followed for any frequency on this band or on the 20 or 75 meter phone bands. If the transmitter frequency does not happen to be an even figure for which there is a dial marking, the position of the Band Spread Dial can be closely estimated.

SPREADING THE WIDE BANDS,- 80 and 160 METERS. On adjustment "C" the Band Spreader covers a little more than half of each wide band. If the Band Spreader is adjusted to "0" on the transmitter each side of the frequency on the 80 meter band, and 80 K.C. to each side on the 160 meter band. If the station's frequency happens to be at one edge of the band it may be more desirable to set the Band Spreader for the edge also instead of at "0". The wide bands are marked + and - K.C. to indicate the high and low frequency ends of the bands.

MONARCH MODEL 1000

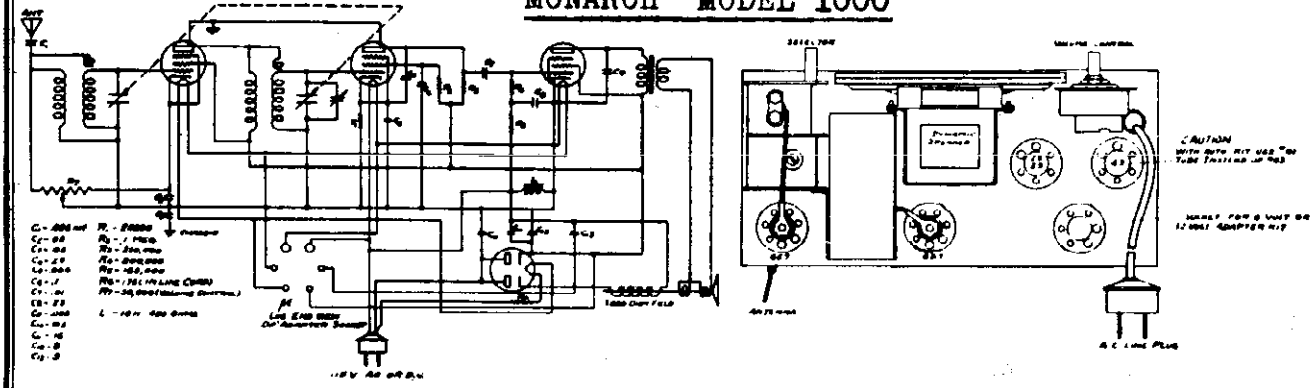

©John F. Rider, Publisher

MODEL RIE 69
Schematic

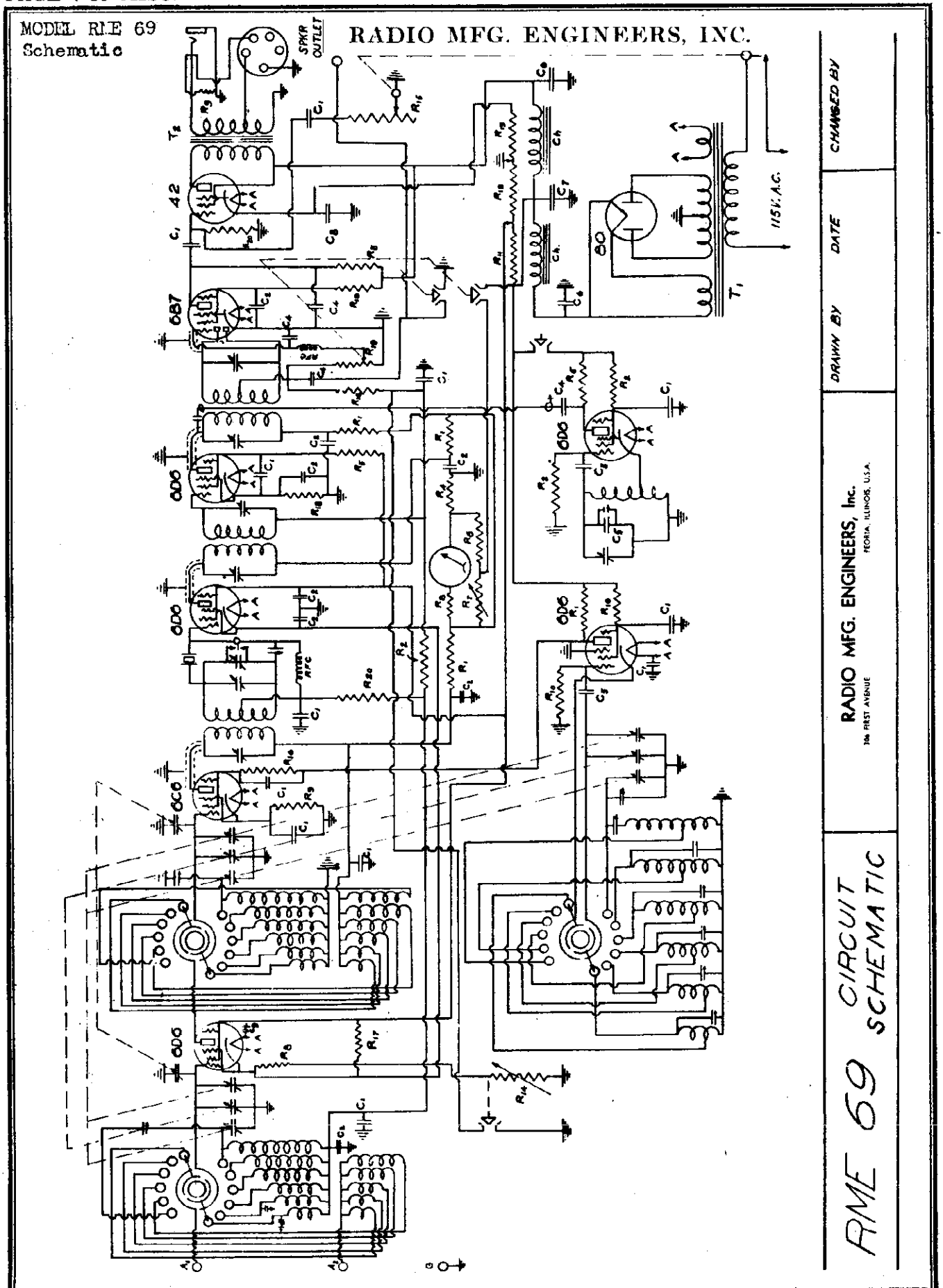

©John F. Rider, Publisher

MODEL RKC-4
Schematic

RK RADIO LABORATORIES, INC.

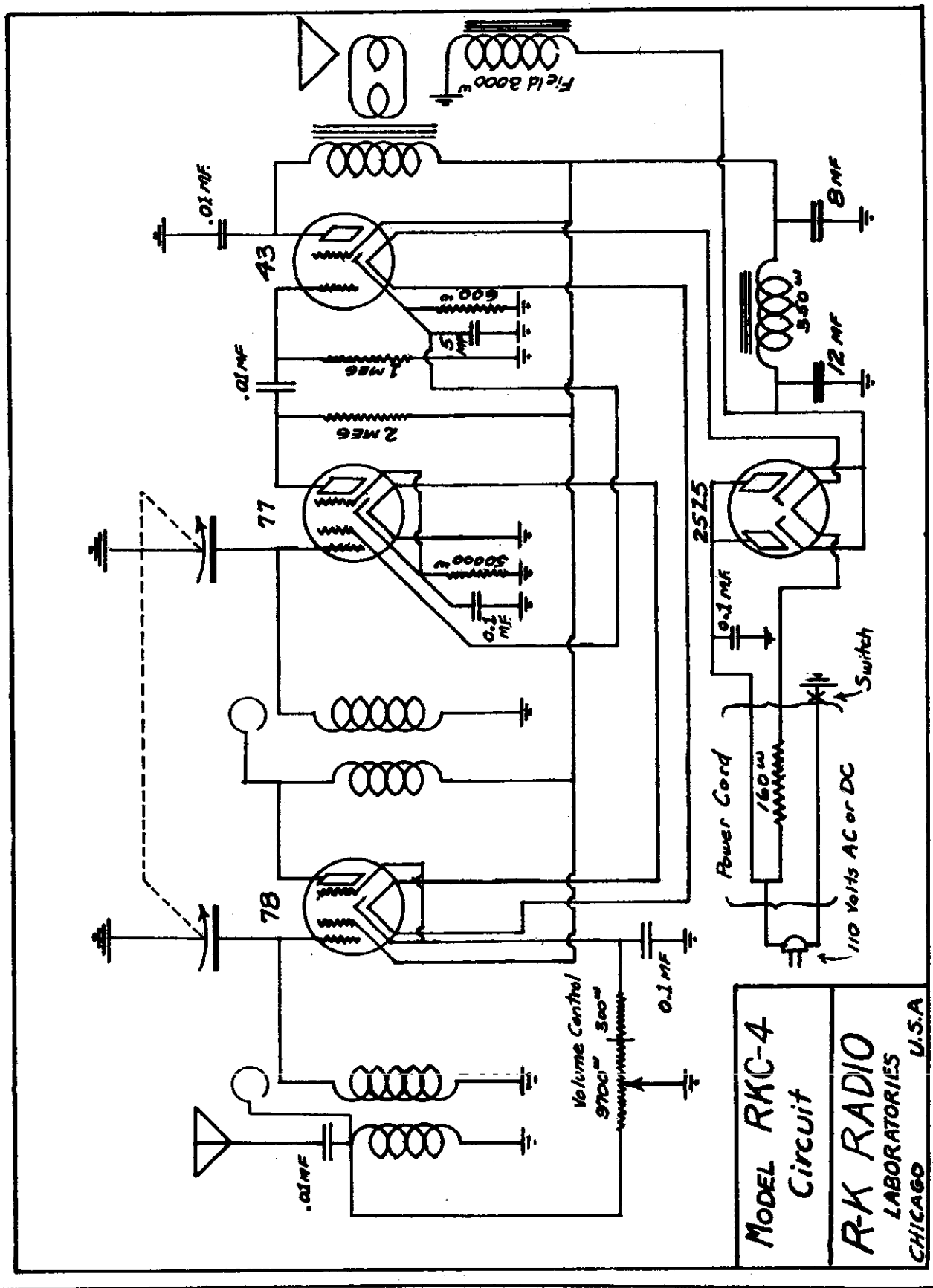

MODEL 660 Sound System
Schematic, Parts, Voltage THE RUDOLPH WURLITZER CO.

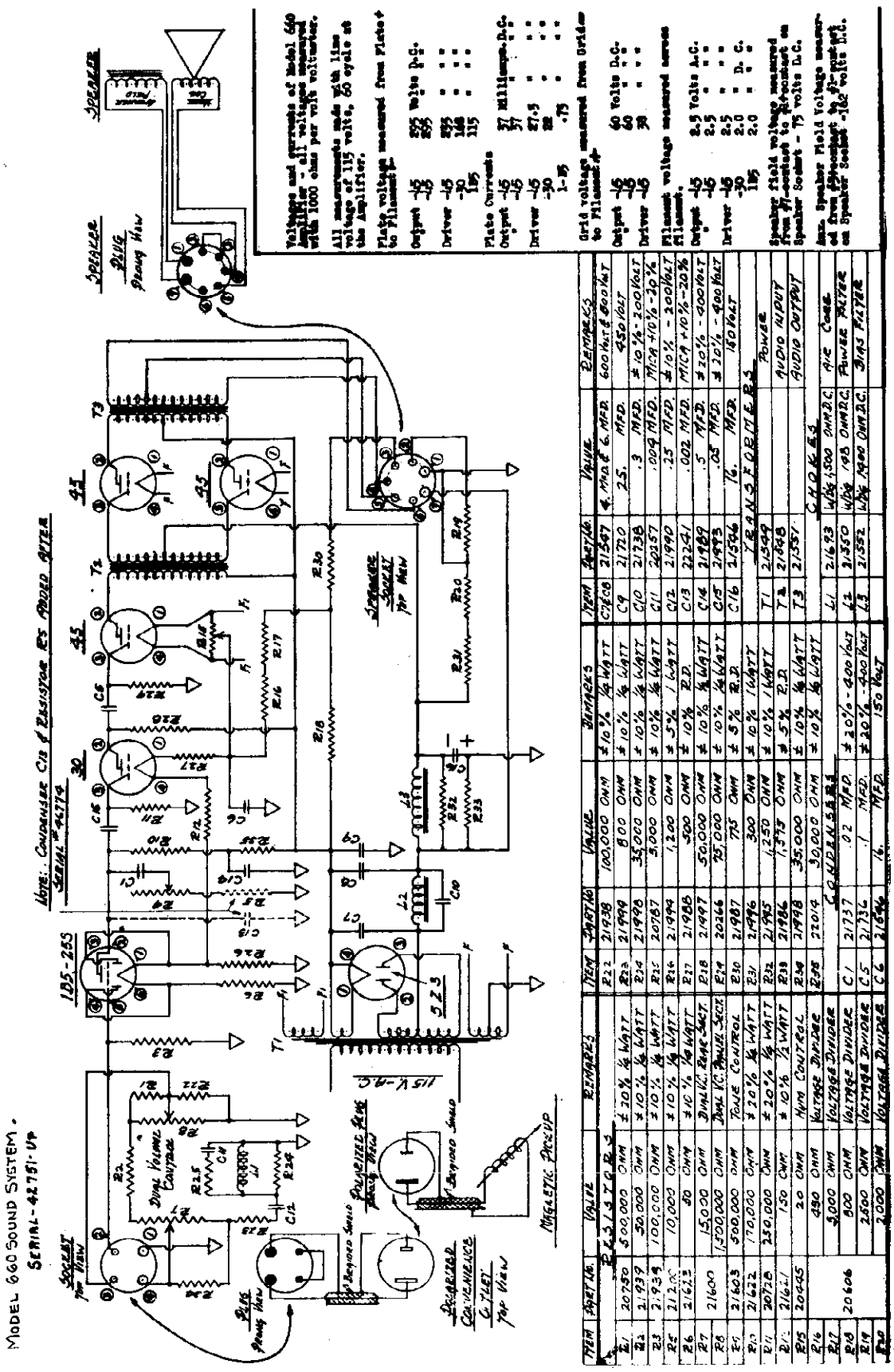

ITEM	PART NO.	VALUE	REMARKS	ITEM	PART NO.	VALUE	REMARKS	ITEM	PART NO.	VALUE	REMARKS
RESISTORS				R22	21938	100,000 OHM	±10% ½ WATT	CAPACITORS			
R1	20750	500,000 OHM	±20% ½ WATT	R23	21999	800 OHM	±10% ½ WATT	C9	21720	.25 MFD.	450 VOLT
R2	21939	50,000 OHM	±10% ½ WATT	R24	21998	35,000 OHM	±10% ½ WATT	C10	21738	.3 MFD.	±10% - 300 VOLT
R3	21934	100,000 OHM	±10% ½ WATT	R25	20787	3,000 OHM	±10% ½ WATT	C11	22357	.004 MFD.	MICA ±10% - 20%
R4	21800	10,000 OHM	±10% ½ WATT	R26	21994	1,200 OHM	±5% 1 WATT	C12	21990	.25 MFD.	±10% - 300 VOLT
R6	21623	50 OHM	±10% ½ WATT	R27	21986	500 OHM	±10% 2 W.	C13	22241	.002 MFD.	MICA ±10% - 20%
R7	21600	15,000 OHM	DUAL VOL. CONT. SECT.	R28	21997	50,000 OHM	±10% ½ WATT	C14	21189	.5 MFD.	±20% - 400 VOLT
R8	21603	500,000 OHM	DUAL VOL. CONT. SECT.	R29	20266	75,000 OHM	±10% ½ WATT	C15	21993	.05 MFD.	±20% - 400 VOLT
R9	21622	100,000 OHM	TONE CONTROL	R30	21987	775 OHM	±5% 2 W.	C16	21596	16. MFD.	150 VOLT
R10	20726	250,000 OHM	±20% ½ WATT	R31	21996	300 OHM	±10% 1 WATT	TRANSFORMERS			
R11	21621	150 OHM	±10% ½ WATT	R32	21995	4,250 OHM	±10% 1 WATT	T1	21349	POWER	
R15	20445	20 OHM	HUM CONTROL	R33	21986	1,775 OHM	±5% 2 W.	T2	21368	AUDIO INPUT	
R16		450 OHM	VOLTAGE DIVIDER	R34	21998	35,000 OHM	±10% ½ WATT	T3	21351	AUDIO OUTPUT	
R17		3,000 OHM	VOLTAGE DIVIDER	R35	22019	30,000 OHM	±10% ½ WATT	CHOKES			
R18	20606	800 OHM	VOLTAGE DIVIDER	C.G. RUBANSARK				L1	21693	4/25 1,500 OHM D.C.	A.C. Coup.
R19		2,500 OHM	VOLTAGE DIVIDER	C1	21737	.02 MFD.	±20% - 400 VOLT	L2	21350	4/25 195 OHM D.C.	POWER FILTER
R20		2,000 OHM	VOLTAGE DIVIDER	C5	21736	.1 MFD.	±20% - 400 VOLT	L3	21552	4/25 1400 OHM D.C.	BIAS FILTER
				C6	21846	16. MFD.	150 VOLT				

Atwater Kent 55

The early type of Model 55—*see A-K page* 3-21 *in Rider's Volume III and page* 159 *in the Rider-Combination Manual*—can be distinguished from the late type—*see A-K page* 3-23 *in Rider's Volume III and page* 161 *in the Rider-Combination Manual*—by the volume control. The first type has a single wire-wound volume contral of 6000 ohms, with the movable arm going to the screen grid of the 1st r-f. tube and the late type has a dual wire-wound and carbon volume control. The wire-wound unit of 6000 ohms has its movable arm connected to the screen grids of the r-f. tubes and the carbon unit of 10,000 ohms is connected in the antenna circuit.

Early or First Type:

This set has only one bleeder resistor, which is connected in series with the positive lead to the volume control. In *early production* of the first type (also known as the Early type) the bleeder is a 6000-ohm tubular resistor No. 15286A (colored purple over the entire resistor) or a 4000-ohm tubular resistor, Part No. 15286B (with a purple band about ¾ inch wide). In later production of the first type Model 55, the bleeder is a 4000-ohm wire-wound resistor, Part No. 16295, which supersedes No. 15286A. No. 15286B is superseded by wire-wound resistor No. 16330.

This set has only one bias resistor and in all cases it is 160 ohms, which value is critical. In early productions of the first type Model 55, the r-f. bias resistor was wound on the same fibre base with the filament-shunt resistor, the part number of the combined unit being 15274. If either section of this unit is found to be defective, remove the resistor and use a No. 16988, 160-ohm resistor as the r-f. bias, and a No. 17077 flexible 10-ohm resistor as the filament shunt. In later production of the first type of Model 55, the r-f. bias resistor is a separate unit and, when defective, should be replaced with a No. 16988 resistor.

Late or Second Type:

This set has two bleeder resistors, which are connected in series with the wire-wound section of the volume control. Bleeder No. 1 (4000 ohms) is in the positive lead to the volume control and bleeder No. 2 (850 ohms) is in the negative lead to the volume control. Bleeder resistor No. 1 is Part No. 16295.

Bleeder resistor No. 2 was made in two different styles. At first it was wound on the same fibre base with the r-f. bias resistor, the part number of the combined unit being 16868. If either section of this unit is defective, remove the resistor and install a No. 16988 as the r-f. bias and a No. 16340 as bleeder No. 2.

Later production of the second type Model 55 used a separate No. 16340 as the No. 2 bleeder.

The early production of the second type Model 55 had a combined r-f. bias resistor and bleeder No. 2, the part number of the combined unit being 16868. If either section of the unit becomes defective, remove the unit and replace with a No. 16988 as bias resistor and a No. 16340 as bleeder No. 2.

Later production of the second type Model 55 used a separate No. 16988 as the r-f. resistor.

•

Majestic 400

The accompanying illustration shows the socket layout for the Majestic Model 400, the schematic diagram

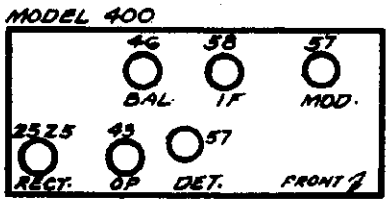

of which appears on *page* 3-42 *of Rider's Volume III and page* 1234 *of the Rider-Combination Manual.*

•

Philco Model G-Code 122

Run No. 1. A 25,000-ohm resistor, No. 71, Part No. 3656 has been added. One end is connected to the screen grid lead for the r-f., oscillator and i-f. tubes and the other end is grounded.

Run No. 2. Tuning condenser, No. 4, removed. Part No. 31-1274 added.

Run No. 7. Resistor No. 20 (1,500 ohms) replaced with Part No. 33-3048 (2,000 ohms).

G. E. A-66 and A-86

Please make a note in your *Index to Rider's Volume VI* that the General Electric receiver, Model A-66, uses the same chassis as Models A-64 and A-67. Also that Model A-86 uses the same chassis as Models A-82 and A-87.

•

G.E. A-70, A-75

On *G. E. page* 6-19 *of Rider's Volume VI* please change the value of the condenser, C-44, in the line between the switch S-6 and the resistor, R-4, in the cathode circuit of the 6A8, from 100 mmf. to 50 mmf.

In the list of replacement parts on *G.E. page* 6-23, delete "RC-235 Capacitor 100 mmf. (C-44)" and substitute for it "RC-210 Capacitor 50 mmf. (C-44) Mica Dielectric". In the stock number column you will find RC-091. Change the C-29 to C-28.

G. E. A-63

If a noisy Model A-63 is found, the trouble may be due to the field coil breaking down to ground. This trouble is not readily apparent, but it should be checked if you come across a very noisy receiver.

Silvertone 1822, 1831, 1824, 1830

A simple circuit change will correct noisy volume controls. Its effect is to remove the d-c. diode current from the volume control and in practically all cases, it will be found that the trouble will be corrected without changing the volume control. However, if the volume control is replaced, the circuit change should be made in addition to prevent noise difficulties.

Connect a 1-megohm resistor across the outer terminals of the tone control, as indicated in Fig. 1, the schematic, and Fig. 2, the wiring diagram.

Unsolder the two leads from the ungrounded outer terminal of the volume control and solder both these leads to one side of a 0.02-mf. condenser. Connect the other side of this condenser to the volume control terminal from which the two leads were removed.

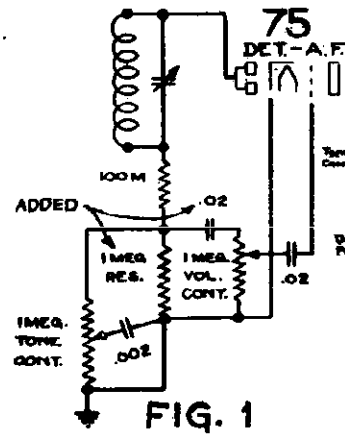

FIG. 1

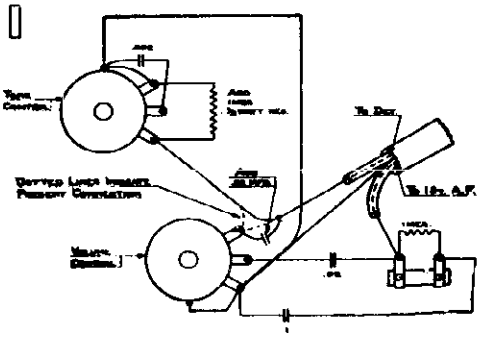

FIG. 2

By the addition of a 1-megohm resistor and a 0.02-mf. condenser, as shown in the diagrams above, noisy volume controls are quieted in these Silvertone sets.

Pilot 93

The Pilot model 93 is shown in Rider's Manual, page Pilot 5-5. Add to the schematic, the information that the i-f. peak is 115 kc. The tube placement is as follows, looking towards the rear of the chassis, with the tuning knob nearest to you: To the right of the 1st i-f. transformer, the 6A7. Between the two i-f. transformers, the 6D6. To the left of the 2nd i-f. unit, the 75 demodulator. Immediately to the left of the speaker transformer, the 25Z5 and on line, but to the rear of the volume control, is the 43 output tube. The i-f. transformers are accessible through the rear of the i-f. cans. The model 93 covers from 545 kc. to 1500 kc. and from 5750 kc. to 15,800 kc. The voltage table, which you should add to the page is as follows:

Tube	Plate	Cathode	Screen	Fil.
Osc.—1st Det	115	3	75	6.3
I-F Amp	115	2.5	75	6.3
2nd Det	50*	1.5	...	6.3
Output	95	15.	105	25.
Rect.	...	135.	...	25.

*Voltage measured through plate resistor.

All plate and screen voltages measured to cathode. All cathode voltages measured to chassis. Speaker field voltage is 110 volts.

The alignment trimmers are placed in various parts of the chassis. Broadcast band alignment trimmers for 1st detector is on side of first section of gang, nearest the front of the set. The pre-selector unit broadcast band trimmer is on the side of the middle gang and the oscillator trimmer for broadcast band is on side of third section. These trimmers are aligned at 1400 kc. The slide wire adjustment is the image suppressor trimmer, aligned at 160 kc. for MINIMUM response. Broadcast band trimmers aligned for maximum response. Short wave trimmer, aligned at 12,000 kc., is located on rear of chassis on line with the phonograph jack. The 600 kc. oscillator trimmer is located on the front of the chassis. To adjust image suppressor, tune the receiver and the test oscillator, feeding into the antenna and ground of receiver, 1630 kilocycles. Slide the wire in or out of the pre-selector circuit until response is MINIMUM. Then repeat alignment of the broadcast band at 1400 kc. for maximum signal.

●

Airline Model 62-153

This Montgomery-Ward receiver is the same as Models 62-124 and 62-129, found on page 5-5 of Rider's Manual, with the exception of the following:

A voltage regulator is incorporated on the chassis, this being mounted in the back left corner by means of a two-prong plug and a receptacle on the chassis. When no regulator unit is employed, the receptacle is covered with a piece of fibre, which is eyeletted in place to protect the jumper wire.

When these sets are shipped with a 3-volt dry "A" battery the regulator unit is in place on the chassis and the initial voltage adjustment has already been made. If the set was originally not equipped with a regulator and it is desired to change from a 2-volt battery to one of 3 volts, the regulator may be inserted by removing the fibre cover, pulling out the jumper wire and inserting the unit by matching up the two-prong plug with the receptacle and pushing down the unit until it rests firmly in the socket. The voltage regulator is connected internally in series with the plus A line.

In some of these sets considerable variation in the type 19 tubes has been experienced with the result that the tone quality has been poor when this tube was operated at a bias of 6 volts. This bias has been changed, therefore, to 4.5 volts, which has been found to be satisfactory in all cases. To effect this change, connect the white battery lead with the "C-6" marker to the —4.5 volt tap on the "C" battery. This lead and the green and yellow lead, with the "—4.5" volt marker, will then be connected to the same —4.5 volt tap on the battery.

●

Airline Models 62-149, 62-155, 62-160, 62-162

These Montgomery-Ward receivers are the same as those described on page 5-3 of Rider's Manuals (Models 62-120, 62-122, 62-126 and 62-128) with the same exceptions as those noted elsewhere for Airline Model 62-153.

●

Belmont 580

Starting with serial number 11501 the following changes have been made in the receiver, whose schematic diagram is shown on Belmont page 2-1 of Rider's Specialized Auto Radio Manual, Volume II:

The cathode and the suppressor grid of the 6D6 tube are now connected to R-3, R-5 and C-5 and so to the cathode of the 6A7 tube, instead of to C-1 and R-2. These last mentioned parts are now out of the circuit.

The value of R-6 has been changed to 19,000 ohms from 12,000 ohms and R-11 from 250,000 ohms to 500,000 ohms.

●

Philco 802

The alignment data for the Philco 802, the schematic of which will be found on Philco page 2-57 of Rider's Specialized Auto Radio Manual, Volume II, is the same as the alignment data for Model 800-Code 12?, which may be found on Philco page 2-56 of the same volume.

Run No. 2. Condenser, No. 52 (50 mmf.) removed and Part No. 30-1032 (250 mmf.) added. Filter choke, Part No. 32-1374 added, being connected in series between pilot lamp, No. 51, and resistor No. 53 and condenser No. 52.

●

Philco 12-Code 122

The original Model 12 was similar to the Model 8, shown on Philco page 3-5 and page 1599 in the Radiotron-Complete Manual, and was properly known as Model 12-Code 121. The later Model 12 is the Model 12-Code 122 and is similar to Model 9, except that it is for 12-volt operation. The tubes, circuit and base arrangement are the same, but the tube heater circuit is that shown in the accompanying illustration. Since 6.3-volt tubes are used,

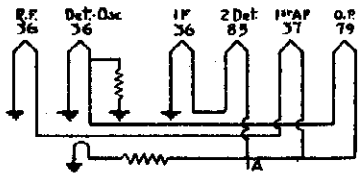

Heater connections for Philco Model 112—Code 122

a series multiple connection must be used to operate them from a 12-volt battery.

The shunt resistor on the oscillator tube is Part No. 33-3002 and is 21 ohms. The speaker employed is the A-9 and is equipped with a 12-volt field. The Model EE dynamotor is used, supplying 40 milliamperes at 220 volts.

The Model 12 has been designed especially for bus and boat installations, where 12-volt battery systems are employed.

The alignment procedure for the Model 12-Code 122 will be found on Philco page 4-53 in Rider's Manual, Volume V.

●

Philco-Hupmobile H

Run No. 6. The first i-f. transformer, No. 17, replaced with a new type having the same part number. It may be identified by the green paint mark on the fibre. For schematic, see Philco page 2-19, Volume II, Rider's Auto Radio Manual.

●

EMERSON

Model 26 (D-5)

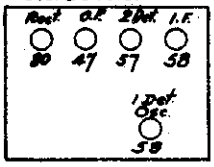

Model 35 (T-6)

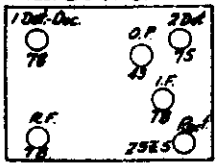

Model 409 (A-4)

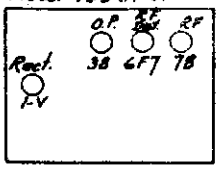

Model 375 LW (W6-L)

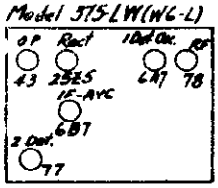

Model 40 (W-6)

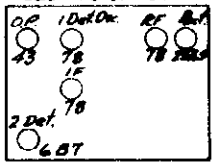

FADA

Model 15, 152 (NE)

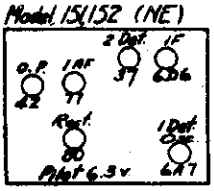

Model 103 (RL)

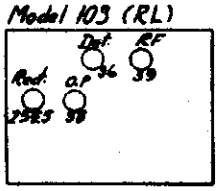

Models 105, 106, 107, 111 (RN)

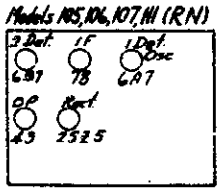

Model 102 (R.P)

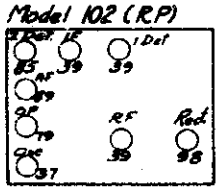

Model 112 (R.S)

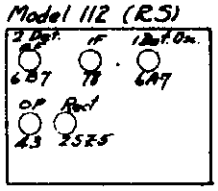

Model 104-B (RV)

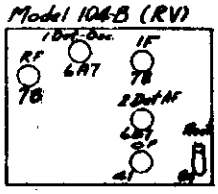

Models 93, 95 (RX)

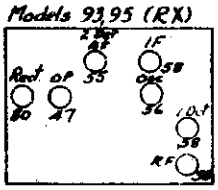

Models 108, 109, 125 (RY)

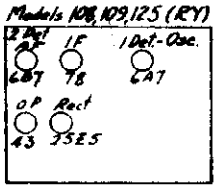

NOTE

Bottom of sketches indicates front of chassis. All top views

FRANKLIN

Model 54

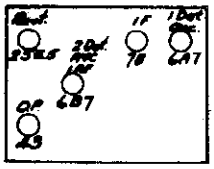

Model 64

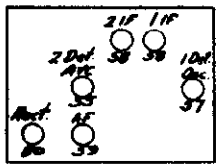

Model 105

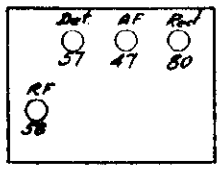

Model 106

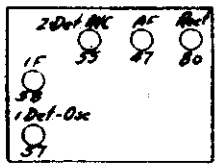

Model 200

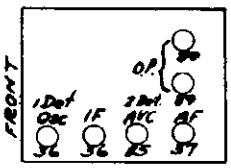

Emerson, Fada and Franklin Layouts

Below will be found the pages in Rider's Manuals on which the schematic diagrams for the socket layouts given herewith will be found. It is suggested that these layouts be cut out and pasted on the respective pages.

Emerson Radio & Phonograph Co.

Model	Page	Model	Page
26 (D-5)	4-1	375 LW (W6-L)	4-7
35 (T-6)	4-3	409 (A-4)	4-8
		40 (W-6)	4-20

Model	Page
NE	54
RN	64
RP	106
RS	

Fada Radio & Electric Corp.

Page		Page
4-16	RV	4-7
4-9	RX	4-1
4-5	RY	4-10
4-11	RL	3-25
	959 Radiotron Complete	

Franklin Radio Corp.

4-6	106	4-14
4-8	200	4-15
4-14		

Radiola 66

The schematic diagram of the a-f. transformer and bypass condensers contains incorrect values of capacities. Kindly make the necessary changes from

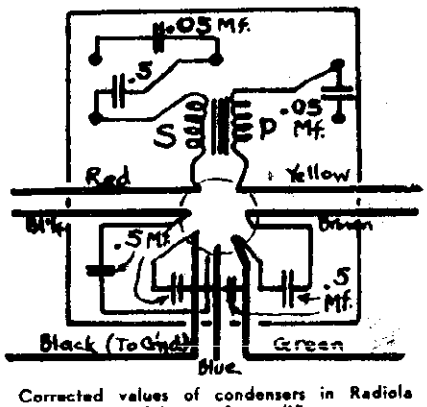

Corrected values of condensers in Radiola Model 66 a-f. amplifier

the accompanying diagram in the condensers' values in the corresponding diagram in your Manuals, where it will be found on the following pages: 1-42, *499 and 1883 in the Radiotron-Complete.

Missing I-F. Peaks

Please add to page Franklin 3-1, the reference that the model 100 and the model 102 employ an i-f. peak of 175 kc.

On Galvin page 3-7 in Rider's Manual, add the data that the i-f. peak is 175 kc. This is the model 7T-47-A. Add the same data onto page Galvin 3-15, covering the model 61. Also add the same information onto Galvin page 3-13 and 3-14 in Rider's Manual, Volume III. This applies to the model 88.

●

Airline Model 62-165

This Montgomery-Ward receiver is the same as Models 62-132 and 62-137, described on page 5-8 of Rider's Manuals, with the following exception:

Part No. 98006, a three-section wire-wound resistor, has been replaced with Part No. 98006A, a resistor of the same type. The new resistor has the same resistance values, the only change being in the 6,000-ohm section (R-14), where a heavier and different wire is now used. This change was made because of breakage being encountered in this section in some of the early resistors. It is suggested that this section of the resistor be checked if this chassis is serviced. In the case of complete receivers in stock, it is NOT necessary to change this unit.

If in servicing, this section is found to be open, a complete new three-section unit or a separate 6,000-ohm, 1.5 watt, carbon resistor may be used for replacement. Should a separate unit be used, be sure NOT to use the end connection on the old three-section unit when making this repair, as the old 6,000-ohm section may be open intermittently. Unsolder all the wires which are connected to the end of the candohm resistor and resolder them to one end of the carbon replacement resistor.

●

Pilot 114 and 115

The intermediate frequency used in these receivers is 456 kc.

I-F Peaks

We suggest that you make note of the i-f peaks given in the accompanying table upon the correct pages in the Rider Manuals. These peak frequencies were not available when the schematic wiring diagrams were first published and we trust that you were not greatly inconvenienced.

Model	I-F Peak	Radiotron Cunningham Complete	Other Rider Manual Page
Audiola Radio Corp.			
28-S-8	177.5	342	3-2
28-S-9Q	177.5	343	3-3
28-S-10	177.5	344	3-4
Crosley Radio Corp.			
121-A	175	724	2-8
121-B	175	724	2-8
167	456		4-9
164	181.5		4-11
176	456		4-11
DeWald Radio (Pierce-Airo)			
50	175	787	4-2
51	175	787	3-12
52	175		4-8
55	456	789	3-7
55-R	456		4-4
56	455		4-6
80	456		4-14
100	456		4-15
BAG	175	791	3-9
KAF	175	793	3-11
Halson Radio			
20-B	456		4-1
NS-50	456		4-8
Roadmaster	456		4-6
Freed Telev. & Radio			
FE-98	175	1028	3-10
354	456		4-3
Howard Radio			
EX	140	1324	3-2
35-A (AVO)	175	1385	3-11

●

Sparton 80, 83, 84, 85-X, 86-X

In some of the early receivers of this model, the resistor R-13, designated as 5,000 ohms, was 3,000 ohms. If this resistor burns out, check the condenser C-8, located in the plate-voltage supply lead to the r-f. tube. The early production used a 200-volt, .2-mfd. unit for C-8. If replacement is necessary, replace with a 600-volt unit. This receiver is shown on page Sparton 5-15 in Rider's Volume V.

●

Sparton 16-AW, 26-AW, 60, 28

The intermediate frequency of the converter used in these receivers is 900 kc. This data is omitted from the schematic shown on pages 2-10, 2-11 and 2-16 in the Sparton section in Rider's Volume II. The same frequency applies to the model 60 converter shown on page 2259 of the Rider-Radiotron Combination, page 2-39 in the revised Rider II, and on page 568-X-8 of the early Rider II. The model 28 employs 172.5 kc.

●

Silvertone 1806, 1823, 1829

Failure of the tuning meter to change its reading as a station is tuned in, together with failure of the AVC may be due to the following cause:

The lock washer under the screws that mount the No. 3 and No. 4 band short-wave coils to their trimmers may short to the stator plate of these trimmers. Although the likelihood is less, it is also possible for the lock washer to short to the movable plate of the trimmer, in which case the receiver will not operate.

If the tuning meter fails to function properly in these models (except 1806 which has no meter) or if the AVC fails to operate, examine the mounting of these coils to their condensers under the chassis. The trouble can be eliminated by loosening the screw, pushing the lock washer away from the condenser and then tightening the screw while holding the lock washer in this position. Service data covering these receivers appears on pages 5-35 and 5-36 in the Sears-Roebuck section in Rider's Volume V.

●

Philco Model 38, Code 123 Changes

In Run No. 7 a 0.1 mf. condenser (part No. 30-4122) was connected between the plus terminal of the 30 tube (1st A-F.) socket and ground. In Run No. 8 and thereafter, this becomes a 0.25 mf. tubular condenser (part No. 30-4146). This condenser acts as a by-pass and prevents oscillation. The schematic diagram of Model 38 will be found on page 4-22 of Rider's Manual.

Effective with run No. 9 a change in the volume control will be made. The value of the new volume control, which is Part No. 33-5094, is the same as before, i.e., 20,000 ohms; however, the lead from the antenna series condenser (40) will be connected to the arm of the control instead of the upper end, which now will be open. Also a by-pass condenser, Part No. 6287K (0.15 mf. bakelite block) will be added from the lower end of the volume control to ground. These changes produce quieter operation of the set.

Colonial Model 657

In later production runs, the pilot light circuit has been changed. See schematic diagram on Colonial page 5-40, Rider's Volume V. In place of the two 115-volt pilot lamps, a 50-ohm center-tapped resistor has been connected in the heater circuit between the 25Z5 and the 6A7. A 6.3-volt lamp (part No. R-2288) is connected across each half of this resistor. The sockets for these lamps with brackets are parts numbers R-10373-A and R-10363-F and are mounted on the variable condenser and volume control brackets respectively.

●

Colonial Models 651, 655, 657

In the sketches supplied by the manufacturer showing locations of the trimmers which will be found reproduced on Colonial pages 5-27, 5-35 and 5-40 for models 651, 655 and 657 respectively, the coil marked "Short Wave Antenna Coil" should in each case be marked "Broadcast Antenna Coil."

●

Audiola Socket Layouts

Below will be found a list of the pages in Rider's Manuals on which the schematic diagrams corresponding to the socket layouts in the accompanying illustration will be found.

Model	Revised Page	Early Page	Radiotron Complete Page
527	1-1	*115	325
627	1-1	*115	326
6-T	1-2	*116	326
8-T	1-2	*116	326
28-S-10	3-4		344
889-829	1-10	*119	328
6 Tube Jr. No. 1	2-6	120-A-2	334
6 Tube Jr. No. 2	2-6	120-A-2	334
Series '31 T.R.F.	1-5	*120	329
Series '31 Super	1-6	*120-A	330

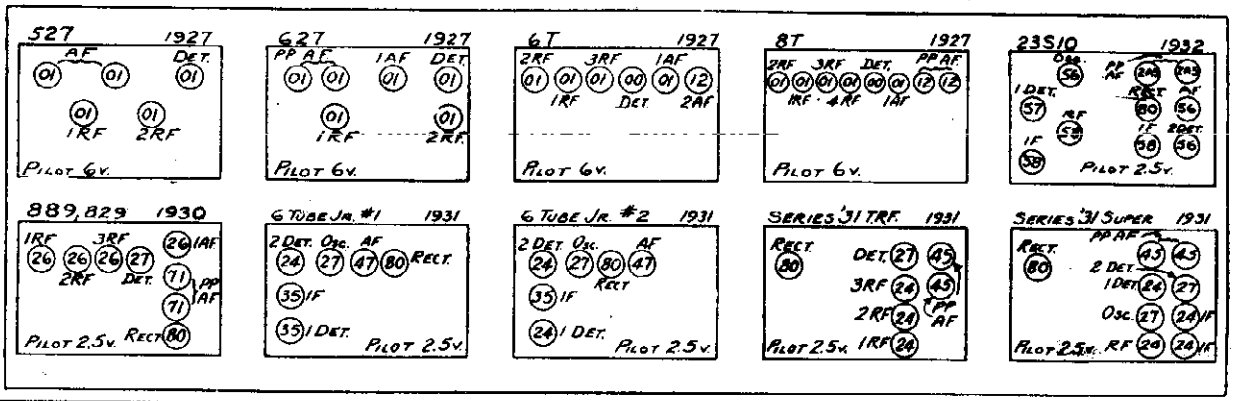

© John F. Rider, Publisher

Silvertone 7124, 7132

The voltage data for the above Sears-Roebuck models will be found below. The schematic and other data will be

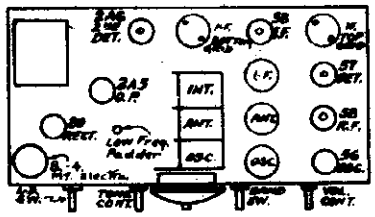

Chassis layout for Models 7124, 7132.

found on *Sears page 5-65 in Rider's Volume V.*

Type	Function	Cathode	Cont. Grid	Suppr. Grid	Screen Grid	Plate
58	R-F.	2.2	0	2.2	90	245
57	Det.	4.8	0	4.8	90	245
56	Osc.	4.1	0	—	—	155
58	I-F.	2.2	0	2.2	90	245
2A6	2nd Det.	1.1	0	—	—	88
2A5	O.P.	16.	0	—	260	285

Line Voltage—117 volts, a.c.

Herewith is also given the tube socket layout for this chassis.

●

Midwest 16-34

Procedure for rebalancing the Midwest 16 tube, 1934 model is as follows: Peak the 1st, 2nd, and 3rd i-f. transformers at 450 kc. to maximum a-f. output. Do not measure the AVC voltage as is usually done. Trim the small AVC amplifier to maximum a-f. output.

Turn wave change switch to M position and dial to 12 mc. Adjust trimmers in oscillator and mixer section. (See *Midwest page 6-11 in Rider's Volume VI* for locations of trimmers.) Set switch to L position and adjust trimmers in r-f., mixer and oscillator sections at 4.5 mc. Turn dial to 1.6 mc. and adjust padder in oscillator section. Turn switch to A position and adjust trimmers in r-f., mixer, and oscillator sections at 1500 kc. Adjust A padder at 530 kc. Turn switch to E position and adjust trimmers in the r-f. oscillator and mixer sections to 370 kc. Adjust E oscillator padder to 160 kc. On H band no adjustment can be made, as this is done at the factory by spacing the turns.

The schematic diagram of this receiver will be found on *page 6-7, 6-8 of Rider's Volume VI.*

●

General Motors 251

The condenser, C-9, in the antenna circuit of the schematic diagram shown in *Rider's Volume II on page 2-9 in the revised edition and page 346-G in the early edition, and in the Rider-Combination page 1099,* should be marked C-7. This condenser has a value of 0.01 mf. Please make this change on the diagram in your Manual.

Wilcox-Gay 4G7, 4H11, 4J6, 4JA6, 4JB6, 4JC6 Alignment

The following alignment instructions apply to the above models *in toto*, with the exception of Models 4JA6 and 4JB6. When aligning either of these two models, disregard that part of the instructions pertaining to the No. 5 Long-Wave Band. Schematics and other data will be found on the following pages in *Rider's Volume VI* for the respective models: *4G7, 6-5; 4H11, 6-6; 4JA6 and 4JB6, 6-3; 4J6 and 4JC6, 6-4.*

I-F. Amplifier:

Set signal generator to 456 kc. and connect output to grid of first detector. Use minimum signal input consistent with proper indication. The first i-f. transformer is the one furthest to the left at the rear of the set. These two circuits should be tuned for maximum amplitude. After ganging the first transformer, the second one should be ganged, and then the third, which is the transformer in back of the variable condenser.

Ganging Oscillator and Preselector Circuits Broadcast Band:

Connect the output of the signal generator to the antenna and ground posts of the set through a dummy antenna. Set the signal generator at 1400 kc., the wave change switch to its fourth position and the tuning dial set so that No. 4 band reads 1400 kc. At this point the trimmer on the first section of the variable condenser should be adjusted. Then the two preselector trimmers on the second and rear sections of the variable condenser should be trimmed for maximum output. Change the signal generator and dial of the set to read 600 kc. and vary the reciprocal trimmer for the broadcast band, which is the left upper of the four trimmers on the front of the chassis, until the 600-kc. signal is indicated on the output meter. Tune the signal generator and the receiver again to 1400 kc. and retune the trimmer on the first section of the condenser for maximum amplitude at 1400 kc. Check the sensitivity at 1000 kc.

Police Band No. 3

Set wave band switch to No. 3 position, signal generator to 4 mc. Adjust upper trimming adjustment to the right of the wave change switch. Then adjust signal generator and receiver to 1.5 mc. and the left lower trimmer to the left of the wave change switch should be adjusted for maximum output. Reset to 4 mc. and recheck.

No. 2 Band:

Set wave change switch to the No. 2 position. Set signal generator to 10 mc. and the dial in the vicinity of this frequency. The center trimmer to the right of the wave change switch should be adjusted for maximum amplitude. Tune generator and set to 4 mc. and adjust the left lower trimmer on the left side of the wave change switch for maximum output.

No. 1 Band:

Set wave change switch to No. 1 position, signal generator to 20 mc. Adjust dial to vicinity of 20 mc. for maximum output and then vary the lower adjustment to the right of the wave change switch on the front of the chassis for maximum amplitude.

No. 5 Long Wave Band:

Adjust signal generator and receiver to 350 kc. and the wave change switch to No. 5 position. Adjust the left-hand trimmer of the three occurring immediately to the left of the variable condenser on the chassis top, until the signal is maximum. Afterwards the two adjustments immediately to the right of this adjustment should be trimmed for maximum amplitude. The generator and the dial should be set to 150 kc. and the adjustment furthest to the left above and to the left of the wave change switch should be adjusted for peak signal. Check again at 350 kc.

Tuning the Trap:

Set signal generator to 450 kc. and its output to antenna and ground. Its output should be a fairly high level. The trimming adjustment on the trap, which is the one immediately to the right of the first detector, should be trimmed for *minimum* response.

●

Packard Bell 45 M

To align this receiver proceed as follows: Have the variable condenser plates fully meshed. Set signal generator to 460 kc., the i-f. peak. Connect the output of the generator to the control grid of the 6A8 tube (top cap). Adjust trimmers on i-f. transformers for maximum gain. Tune the generator to 1700 kc. and the receiver to approximately the same frequency and adjust the trimmers of the oscillator and modulator condensers for maximum output. Be sure that the wave change switch is turned to the right. In case the receiver will not track, tune the generator to 1400 kc. and readjust for maximum output. The adjustments for 1000 and 600 kc. are made by bending the outside rotor plates of the gang condenser. Then turn the wave-change switch to the left and tune the signal generator to 18 mc. Adjust the trimmer condensers of the short-wave oscillator and modulator coils for maximum output. The adjustment at 6 mc. will have to be made by spacing turns of these two coils, but unless the receiver has been tampered with, it is unlikely that this adjustment will have to be made.

The schematic diagram for this receiver will be found on *page 6-4 of Rider's Volume VI.*

●

Packard Bell 35

The alignment of this receiver is as follows: Set signal generator to 460 kc., the i-f. peak, and the volume control full on. Set variable condenser with the plates fully meshed. Adjust the i-f. trimmers, directly beneath the variable condenser, for maximum output. Then tune the signal generator to 1700 kc. and adjust the trimmers on the variable condenser for maximum output. The adjustments at 1000 kc. and 600 kc. will have to be made by bending the outside rotor plates of the variable condensers for maximum signal.

The schematic will be found on *page 6-4 of Rider's Volume VI.*

Colonial 603

Changes have been made in the antenna circuit of this receiver, the schematic of which will be found on

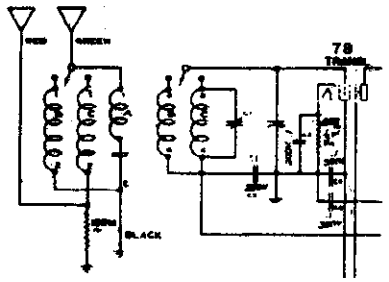

Circuit change in Colonial 603

Colonial page 5-19 of Rider's Volume V. The new circuit is shown in the accompanying illustration. The rest of the wiring remains unchanged.

Colonial 656

In the schematic diagram of this circuit, appearing on *page 5-37 of Rider's Volume V*, the third section of the gang condenser was omitted in the antenna circuit, only the trimmer being shown. Please draw in on the above-mentioned schematic a variable condenser shunted across the trimmer, appearing in the extreme upper left-hand corner of the diagram.

The fixed condenser shunted across the 3000-ohm resistor in the cathode circuit of the 75 tube has a value of 0.1 mf. Please mark this in opposite this condenser.

The value of the resistor connected between the 500,000-ohm receiver in the grid circuit of the 42 tube and the junction of the speaker field and the 350-ohm resistor, has been changed from 4000 to 5000 ohms.

RCA D7-7

In some sets bearing the above model number, the value of the resistor, R-5, is 12,000 ohms. This ordinarily is 33,000 ohms. The resistor is connected between the screen grid of the 6K7 i-f. amplifier, and the ungrounded side of the 10-mf. condenser, C-22.

The usual value of the resistor, R-19, which is connected between the grounded heater terminal of the 6A8 tube and the same tube's oscillator grid, is 100,000 ohms. In some sets the value of R-19 is 56,000 ohms.

Sometimes heterodyning may be encountered on these sets due to excessive antenna capacitance. This may be corrected by reducing the size of the antenna or by inserting a 150-mmf. condenser in series with the antenna lead. This may be done in the receiver by removing the brown lead which goes from the antenna terminal to the wave trap inductance, L-1, and inserting the condenser between these two points. In some instances, interference in the form of "beats" may be remedied by tuning the antenna wave trap to that station. The wave trap will tune up to 700 kc.

Silvertone 1650

The selectivity of this set can be improved by disconnecting the two leads to the small choke coil in the 1st i-f. circuit and inserting in its stead a 0.005-mf. fixed condenser. (This choke coil is in parallel with the 20,000-ohm re-

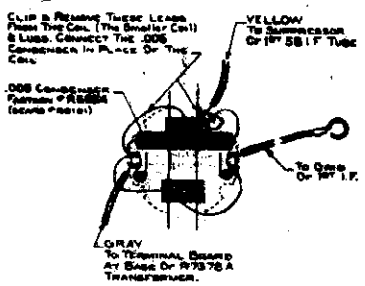

Substituting a condenser for the choke in the i-f. amplifier improves selectivity of Model 1650.

sistor in the input circuit of the 58 i-f. tube. *See Rider's Volume VI, Sears page 6-7.*) After this substitution, the i-f. stages must be re-aligned with an oscillator. This re-balancing is very important, as the effect of the change will be lost if it is not done. See accompanying sketch for locations of coil to be removed and condenser to be substituted.

●

Silvertone 1640

Reception can be often improved by the insertion of a choke (Part No. R-8301) in the *red* plate lead of the 283 rectifier. This will reduce the hiss or feedback. In some instances this tube may cause interference within the set, as well as other sets in the vicinity. If the use of one choke does not eliminate the trouble, a similar choke can be inserted

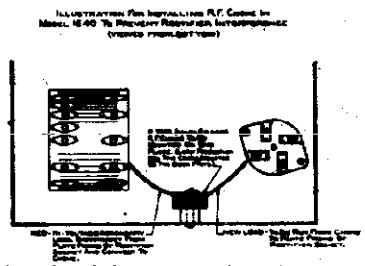

How the choke is inserted in the Sears-Roebuck 1640 for reducing hiss.

in the other plate lead of the 283. See accompanying illustration for installation of this choke. For schematic diagram, see *Rider's Volume III, Sears page 3-12 and page 2098 in Rider-Combination Manual.*

The undesirable effect of time lag (weak programs interrupted during bursts of static) can be greatly reduced by replacing the 0.1-mf. condenser, connected between the plate and cathode leads in the type 57 AVC tube, with one having a value of 0.01 mf. Making this change minimizes the time lag difficulty when tuning in distant stations in some localities without affecting the AVC action. The reduction of capacity lessens the charging time of the condenset and therefore the AVC recovery is practically instantaneous.

●

Silvertone 1855

The schematic diagram of this Sears-Roebuck receiver, appearing on *page 5-45 of Rider's Volume V*, should be changed according to the manufacturer.

There should be no choke coil across the upper 0.5-mf. condenser in the vibrator circuit.

The on-off switch should be in the other 32-volt line—not in the same line with the 2.5-amp. fuse.

The tap in the primary winding of the power transformer should go to the 32-volt line to the right of the on-off switch. In other words, the 0.5-mf. condenser should be across the 32-volt main.

The secondary of the power transformer should be tapped and connected to the junction of the two 0.3-mf. condensers that are shunted by the Globar resistor.

●

Silvertone 1822, 1831

In some receivers carrying these model numbers a felt ring between the small speaker and the baffle was omitted, with a rattling of the speaker resulting. This is due to the fact that when the mounting screws of the speaker draw the speaker tightly against the baffle, the speaker frame may become slightly bent, throwing the cone off center. The felt ring acts as a cushion mounting to prevent this bending. Do not tighten the mounting screws any more than is necessary. If this felt ring is missing, one should be inserted, its part number being R9959.

●

Fada 25, 25-Z

The volume control used in this receiver is rated at 3,000 ohms. The schematic wiring diagram appears in the Rider Combination on page 915 and on page 1-15 in the Fada section and also on page *79 in the early editions of Rider's Volume I.

Sentinel Socket Layouts

Below will be found socket layouts for several Sentinel receivers. It is suggested that they be cut out and pasted

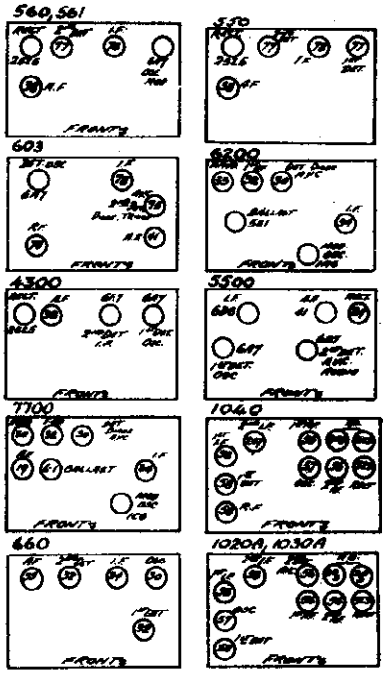

on the respective pages of the *Rider's Manuals* indicated. The schematic diagrams of the sets appears on the following pages: *560, page 3-3 and 2117 in the Rider-Combination; 550, page 5-9; 603, page 5-17; 6200, page 3-34; 4300, page 5-24; 5500, page 5-25; 7700, page 5-35; 1040, page 5-21; 660 Battery, page 5-19; and 1020-A, page 4-15.*

●

Erla Model 6200

The 0.02-mf. condenser, Part No. 9714, used to bypass the grid return of the first i-f. transformer was a 0.01-mf. condenser in early production. To eliminate any tendency of the i-f. amplifier to oscillate, the 0.01-mf. condenser has been changed to 0.02 mf. in later production. If receivers are encountered in which i-f. oscillation occurs, replace the 0.01-mf. condenser, if there is one, with one having a value of 0.02 mf.

The 10,000-ohm resistor, Part No. 6786, and the 0.005-mf. condenser, Part No. 1275, have been added to the plate circuit of the 33 output tube, where they are in series with the plate and ground. This addition improves the tone quality and decreases background noise. Excessive background noise and high-pitched tone in these sets can be rectified by adding these two components as indicated. Early production sets did not have this resistor and condenser.

The 4-mf. wet electrolytic condenser, Part No. 1291, connected between ground and the connection between the primary of the first i-f. transformer and the 10,000-ohm resistor in the No. 2 grid circuit of the 1A6 tube, has been added in late production sets to eliminate motorboating when the set is operated with low "B" battery voltages. If sets are encountered that motorboat when the "B" battery is low, install a 4-mf. condenser, as indicated.

The complete servicing data on this receiver will be published in Volume VI of Rider's Manual.

●

Erla Models 7700, 7732, 7741

In early production of these sets the value of the condenser in the grid return of the first i-f. transformer was .01 mf., Part No. 7860. To eliminate tendency of the i-f. amplifier to oscillate, this condenser has been changed to .02 mf., Part No. 9714. If any receivers are found having i-f. oscillations, change the .01 mf. condenser to one having a value of .02 mf.

To eliminate self modulation of the 1C6 tube the 50,000-ohm resistor, Part No. 6879, has been changed to 35,000-ohm resistor, Part No. 1618. Wherever self modulation occurs, try another 1C6 tube or replace the 50,000-ohm resistor with one having a value of 35,000 ohms.

●

Sentinel 108

The voltage and alignment data for Model 108 will be found herewith. The schematic diagram for this receiver appears on *Sentinel page 1-3 of the revised edition of Rider's Volume I; page *624-A of the early edition and on page 2107 of the Rider-Combination Manual.*

Type	Function	Filament	Plate	Grid	Screen	Plate MA
224	R-F.	2.4	250	4	75	2.15
224	1st Det.	2.4	250	6.0	80	.25
224	I-F.	2.4	250	4	75	2.25
227	Osc.	2.4	60	—	—	4.75
224	2nd Det.	2.4	100*	6	40*	.35
245	Output	2.4	250	50**	—	30.
280	Rect.	4.85				27 per plate

* Comparative readings; not true voltage applied.
** To take 245 bias reading, read between the electrolytic cans.

Alignment Data:

Set the signal generator to 175 kc. and connect the output to the grid of the 224, 1st detector, from which the grid cap has been removed. Trimmers of the i-f. transformers are accessible through the small holes in the top of the cans. Align the grid trimmer of the first i-f. coil, then the second i-f. coil.

Replace the grid cap on the 1st detector and connect the signal generator's output to the antenna and ground posts of the set, having tuned it to 1435 kc. Set the receiver's dial to this frequency also. Track the variable condensers by adjusting the trimmers in the following order: Oscillator, antenna and r-f. (The sections of the condenser are in this order, starting at the front of the set.) Then check the condensers at 1295 kc., by bending the end plate of the rotors. Check also at 880, 650, and 550 kc.

●

Erla Model 9100

Some of the early Model 9100 receivers had a tendency to motorboat on the broadcast band when the tone control was turned to the bass position. This has been rectified in later production by removing the 0.002-mf. condenser, Part No. 6590, and by passing the plate of each 30 a-f. tube with a 0.004-mf. condenser to the chassis base. Make this change if motorboating should be encountered in any Model 9100 receiver.

●

International 53, 553

The first production of these models, in which a 6J7 tube is used as the second detector, does not incorporate AVC. When operated in the vicinity of powerful broadcast stations, a tendency toward overloading may be found on strong signals. It is evidenced by blocking out of the signals as the volume control is advanced. This condition can be corrected by making the simple change shown in the accompanying illustration.

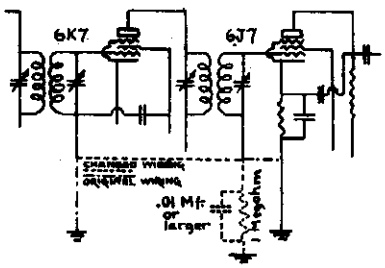

Partial schematic diagram of early Models 53, 553 showing changes to prevent blocking.

Originally the grid returns of the 6K7 and the 6J7 tubes go directly to ground. See schematic diagram in *Rider's Volume VI, page 6-8.* These should be removed from ground, tied together and returned to ground through a 1-megohm resistor shunted by a condenser of 0.01-mf. or larger. In making this change, be sure that the cathode of the 6J7 tube is connected as shown in the illustration and not left connected to the low end of the second i-f. transformer grid winding.

●

Stromberg-Carlson 68, 68-X

Since Volume V of Rider's Manual has gone to press, we have learned of the production of what is known as the Stromberg-Carlson 68-X. Basically, this receiver is the same as the model 68, which is shown in Rider's Volume V, pages 5-5 to 5-10, inclusive. However, the X models, which can be identified by an "X" following the serial number, incorporate certain changes. First, the secondary winding of the oscillator band A transformer contains a .00045-mfd. fixed condenser in shunt with the series trimmer, or in shunt with C-26.

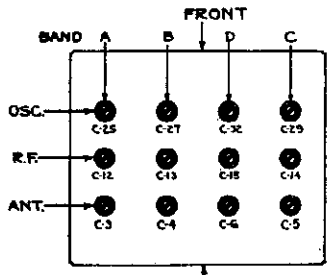

VIEW OF BOTTOM OF CHASSIS SHOWING HOLES FOR ADJUSTING SHUNT ALIGNING CAPACITORS.

Second, a 10,000-ohm fixed resistor is inserted into the common lead joining the band B and band C secondary windings in the r-f. tube grid circuit. Third, a fixed condenser has been added between the common lead connecting the band A and band B secondaries of the r-f. input transformer, and ground. Fourth, the fixed condenser C-24, located between the common lead joining all of the oscillator primary windings and ground has been changed from .1 mfd. to .05 mfd. The location of the twelve shunt aligning condensers is shown in the accompanying illustration. The numbers correspond to the designating numbers shown upon the schematic and selector chassis wiring.

●

Sears-Roebuck 1857

A unique form of volume control is used in this receiver and we feel that it deserves mention. The schematic is shown upon pages 5-47 in the various issues of Rider's Manual Volume V. The output i-f. transformer is equipped with variable coupling between the primary and secondary windings. The variation in signal transfer between these two windings, as a consequence of the change in coupling, is the volume control. Incidently, the i-f. coupling unit, employed between the i-f. amplifier tube and the demodulator or second detector, is resistance-capacity coupling. Only the input and output i-f. coupling units are of the transformer variety.

Certain instructions pertaining to the increase of "high" audio response has been furnished by the manufacturer. Connect a 15-mmfd. condenser between the plate terminal of the input i-f. transformer primary and the grid terminal of the input i-f. transformer secondary. This condenser can be mounted inside the i-f. transformer shield can, atop of the Isolantite base. It will be necessary to re-peak the i-f. transformer at 175 kc.

●

Sentinel Model 7700, 7732, 7735, 7741

An error is acknowledged in the schematic of this receiver as shown upon page Sentinel 5-35 in Rider's Manual. The A plus lead is connected to the grid circuit instead of to the common filament lead. The diagram as shown and as correct appears below.

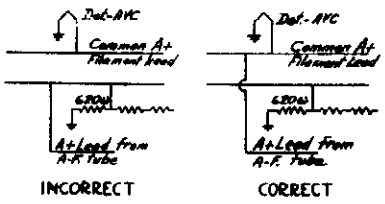

Correction in filament circuit of Sentinel 7700, 7732, etc.

●

Philco Model 16 (Codes 126, 127)

Starting January 10th the Shadowmeter shunt resistor, number 78, was changed from part No. 5310, which has a value of 5000 ohms, to part No. 7775, which has a value of 2500 ohms. This prevents the shadow from becoming too wide. Please note that this change will *not* be made in the model of 16 Code 125 receivers. However, it will be made in Model 500, Code 122 and Model 501, Code 122.

●

Philco Model 34

Starting with run No. 4, an r-f. choke, part No. 32-1514 is added, connected in the 135-volt B battery lead, between the points where diagram parts No. 37 and 45 join it. This prevents oscillation in the i-f. stage. For schematic see Rider's Volume V, Philco page 5-21.

●

Philco Model 144

Starting with run No. 3, the following change was made to improve stability:

The 0.25-mf. section of diagram part No. 26 bypass, which has been used as cathode bypass on the 6A7 tube, is now used as cathode bypass on the first 78 i-f. tube. A 0.25-mf. tubular condenser part (part No. 30-4146) is added, as bypass for the 6A7 cathode

The cathode bypass on the 78 first i-f. tube previous to this change was a 0.5-mf. tubular condenser (in Code 125); in code 121 it was a section of the diagram part No. 26 bypass block, as shown in the schematic on page Philco 5-41 in Rider's Volume V.

These changes also apply to Model 506, code 122, Radio Phonograph.

A change was also made in the shadowmeter circuit to improve its operation. Referring to the schematic, the upper end of the shadowmeter is no longer connected to the diagram part No. 65 resistor, but only to diagram part No. 33 second i-f. transformer primary and also to the primary of diagram part No. 28 first i-f. transformer. The lead from diagram part No. 52 now goes to lower end of shadowmeter only. A connection must then be made from the lower end of resistor No. 65 to the junction of diagram parts No. 52, 46 resistor and 42 condenser, to complete the circuit.

The shadowmeter used will now be part No. 45-2028 and an 8000-ohm resistor (part No. 33-1114) will be connected across it to prevent too wide a shadow.

●

Detrola "Roadmaster"

The i-f. peak of this receiver, shown on page Detrola 5-2 in Rider's Manual, Volume V, is 456 kc. Please make this addition to your manuals.

●

Sparton Model 35

The i-f. peak of this receiver is 172.5 kc. Please make a note of this on the schematic diagram, which will be found on page 3-5 of Rider's Volume III, and on page 2245 of the Radiotron-Complete edition.

●

Sparton Model 36

To protect the life of the vibrator in the Sparton model 36 auto radio receiver, add a 0.01 mfd condenser, rated at 1,600 volts, across the secondary winding of the power transformer in the eliminator unit.

●

Oscillation in Sparton 65, 66

In case the metal braid shielding on the control-grid lead to either of the type 78 tubes becomes pushed down on the leads, these receivers may oscillate or otherwise operate improperly. This shielding may be pushed down accidentally when removing or installing the tube packing or changing tubes. Therefore, always pull these shields up to their full length in case of oscillation in these models. Sparton models 65 and 66 are shown upon Sparton page 5-7, 5-8, and 5-9 in Rider's Volume V.

Audiola Socket Layouts

The accompanying illustrations show the socket layouts of six Audiola chassis, the schematics for which will

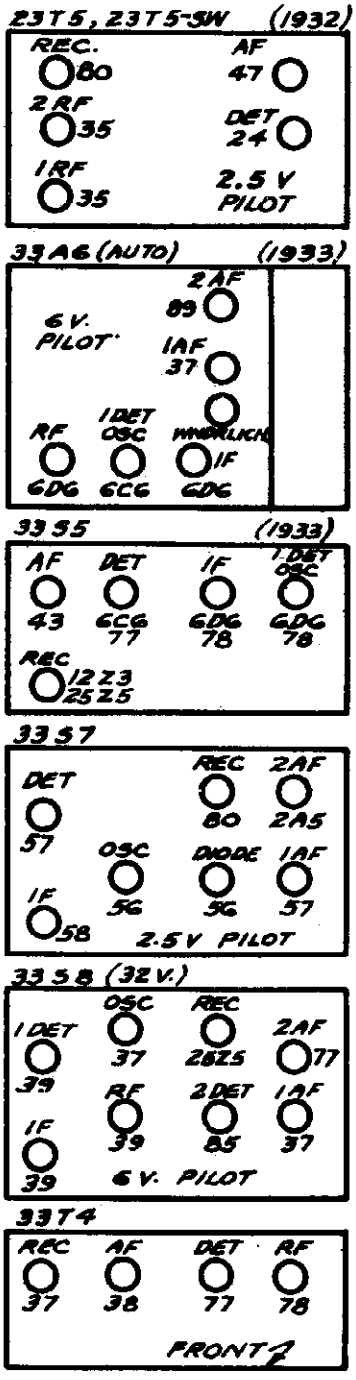

Audiola socket layouts.

be found on the pages in Rider's Manuals indicated opposite the model numbers below:

Model 23T5, 23T5-SW on Audiola *page* 3-6 *in Rider's Volume III and page* 346 *in the Rider-Combination Manual;* 33A6, *page* 4-5; 33S5 and 33S7, *page* 4-7; 33S8, *page* 4-4; and 33T4, *page* 4-7.

Howard Socket Layouts

Herewith will be found five socket layouts for Howard receivers, the sche-

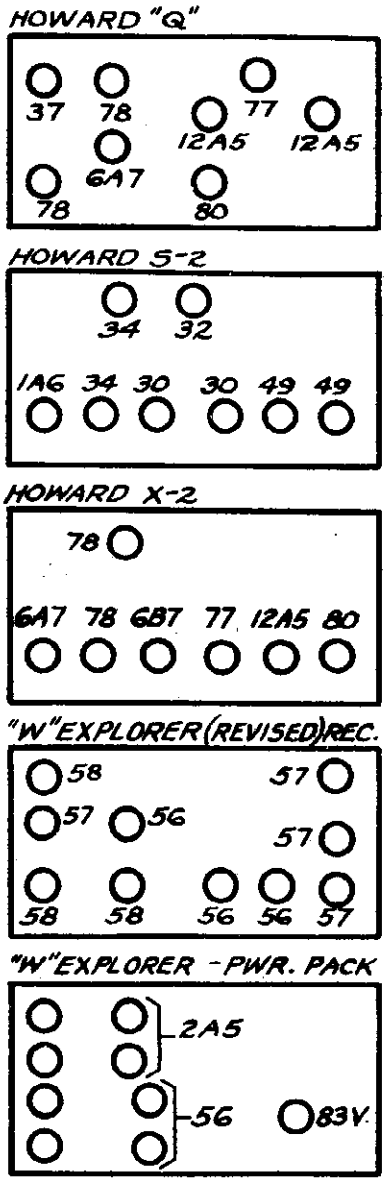

matics of which appear on the following pages in Rider's Manuals:

Model	*Page*
"Q"	4-3
S-2	4-1
X-2	4-5
"W" Explorer (Revised)	6-13

The last layout—that of the power-pack of the "W" Explorer—applies to both the early and the revised models. See pages 5-6 and 6-13.

•

The schematics for the Halson receivers were run on the following pages: Model 515, 3-1 *in Rider's Volume III and* 1271 *in the Rider-Combination Manual;* Model 615, 3-3 *in Rider's Volume III and* 1273 *in the Rider-Combination.*

Halson Layouts

The accompanying socket layouts of Halson receivers are for those schematics that will be found on the following pages in *Rider's Manual, Volume IV:*

Model	Page
20-A	4—1
20-B	4—1
NS-40	4—3
NS-50	4—3
Roadmaster	4—5

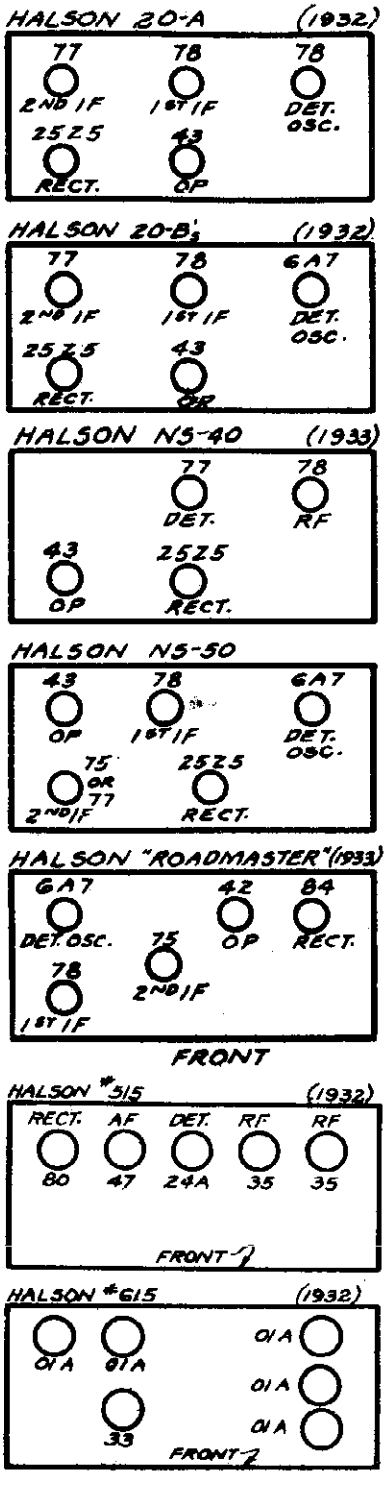

Atwater Kent 60

The first or early type of Model 60 —*see A-K page* 3-29 *in Rider's Volume III and page* 167 *in the Rider-Combination Manual*—has a single volume control and the second or late type—*see A-K page* 3-31 *in Rider's Volume III and page* 169 *in the Rider Combination Manual*—has a dual volume control made up of combined wire-wound and carbon resistors.

First or Early Type:

When replacing the bleeder resistor, use No. 16295 wire-wound resistor, 4000 ohms. When replacing the first r-f. bias resistor, use No. 16253 wire-wound resistor, 1500 ohms and replace the r-f. bias resistor with No. 16988, 160 ohms.

Second or Late Type:

The bleeder resistor No. 1 was made in two types. The first type, No. 16905, consists of two 3000-ohm wire-wound resistors riveted together and connected in series. The second type, No. 17041, is a single 6000-ohm wire-wound resistor with a tap at the center. Use No. 17041 for servicing.

In early production of the second type Model 60, bleeder resistor No. 2 was wound on the same fibre base as the first r-f. bias resistor, the part number of the combined unit being No. 16872. If either section of this combined unit is defective, remove the unit and use a No. 16253 (1500 ohms) as r-f. bias, and a No. 15660 (1050 ohms) as bleeder No. 2. Later production of the second type Model 60 used a separate No. 15660 resistor as bleeder No. 2.

In early production of the second type Model 60, the first r-f. bias resistor was wound on the same fibre base as bleeder resistor No. 2, the number of the combined unit being No. 16872. If either section of this unit is defective, remove the unit and use a No. 16253 as a first r-f. bias resistor and a No. 15660 as bleeder No. 2. Later production of the second type Model 60 used a separate No. 16253 as first r-f. bias resistor.

Use a No. 16988 resistor (160 ohms) for replacement of the r-f. bias resistor.

•

Motorola Golden Voice

We have been advised by the manufacturer that intermittent operation of their Motorola Golden Voice models, is due to low battery voltage delivered to the set from the car's battery. Check all connections between the car battery and the radio set to avoid undue voltage drop in the car wiring, as the OZ-4 rectifier tube will fail to start and fail to operate on a battery voltage of less than 5½ volts.

The OZ-4 tube requires 15 milliamperes or more of drain to produce ionization and proper rectification in this tube, and on battery voltages of less than 5½ volts the plate current drain of the receiver is insufficient to provide the 15 milliamperes starting current. Should the car wiring and the condition of the car battery indicate that at times the voltage may fall below 5½ volts, replace the OZ-4 rectifier tube with a 6X5 metal filament type rectifier.

With the exception of a few Golden Voice sets the filament contacts of the rectifier socket have been wired at the factory and the 6X5 rectifier may be plugged in the socket in place of the OZ-4. This will completely eliminate the difficulty due to low battery voltage.

On those Golden Voice sets not having the filament contacts of the rectifier socket wired, this wiring can be inserted by inverting the chassis and removing the cover from the hash compartment and connecting the filament contacts of the rectifier socket, as shown in the accompanying sketch. One contact to ground as indicated by

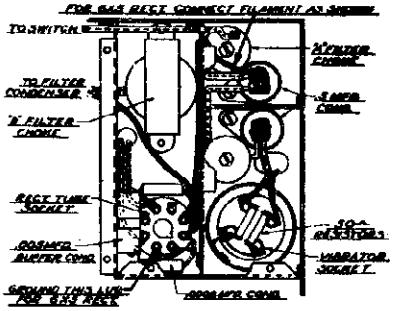

Connections when using a 6X5 in Motorola Golden Voice set

the heavy arrow at the bottom of the socket and the other contact to the .5 mfd. condenser as indicated by heavy arrow at the top of the sketch. When replacing cover be sure that all screws are tight.

•

Federal Model K

Below will be found the voltage data for this receiver, the schematic of which appears on the following pages in *Rider's Manuals: 1-21 in the revised edition; *284 in the early edition, and 987 in the Rider-Combination Manual.*

Tube	Function	Plate to Frame	Grid to Cathode	Scr. Grid to Frame
227	1st R.F.	120	7.5	—
224	2nd R.F.	110	1.5	60
227	Det.	65	0-1	—
227	1st A.F.	135	7.5	—
171A	P.P.O.P.	205	40	—

Emerson 108, 110

The changes listed below have been made in Chassis U5A, on models bearing serial numbers above 758,100. The schematic for models 108 and 110 appeared on *Emerson page 6-17 of Rider's Volume VI.*

Resistor, R-9, changed from 500,000 ohms, Part No. KR-56, to 50,000 ohms, Part No. KR-53. Resistor, R-11, changed from 500,000 ohms to 200,000 ohms, Part No. LR-61. Resistor, R-12, changed from 500,000 ohms to 100,000 ohms, Part No. KR-54. Condenser, C-13, changed from 0.01 mf., Part No. CCC-127, to 0.02 mf., 200 volts, Part No. FC-29. Condenser, C-14, from 0.1 mf. to 0.9 mf., 200 volts, Part No. BBC-131.

•

Sparton I-F. Peaks

The following receivers manufactured by Sparks Withington have an i-f. peak of 172.5 kc.:

Models 9-X, 13, 14-A, 15-X, 16-AW, 17, 25-X, 27-X, 28, 30-A, 33, 34, 35, 36, 111-X, 620-X, 750-A, 750-X, 870-A, 870-X.

The following Sparton models have an i-f. peak of 456 kc.: 71, 71-B, 81, 82, 333.

Model 60 has an i-f. peak of 900 kc.

Note: The s-w. converter in Model 16-AW operates on an intermediate frequency of 900 kc.

It is suggested that you write these i-f. peaks on the schematics for these models in your Rider Manuals.

•

Atwater Kent 55 and 60

If the first a-f. bleeder resistor is defective in either of these models, replace with a No. 15660 resistor (1050 ohms).

When either the yellow (No. 15544) or the maroon (No. 15545) second a-f. bias resistor requires replacing, do not use a new yellow or maroon resistor, but follow the procedure found below.

Remove both the yellow and maroon resistors and replace the yellow one with a white resistor (No. 16724), 40,000 ohms, 1 watt, and the maroon resistor with a black (No. 15592), 65,000 ohms, 1 watt.

These changes affect only the second a-f. bias resistors in Models 55, 55C, 60 and 60C.

•

Garod I-F. Peaks

The i-f. peak of the receivers of this manufacturer, that are shown in *Volume VI of Rider's Manuals*, is 456 kc.

© John F. Rider Publisher

Grunow Chassis 58

On *page 6–3 of Rider's Volume VI* the parts list showed that the same loud speaker was used for all four model numbers using this chassis. This has been changed. For models 501 and 550, the speaker parts are the same as those listed on the page in Volume VI, but in models 520 and 530, the output transformer part number is 34420 and that of the complete speaker is 34498.

•

Atwater Kent 317

A couple of changes have been made in the early type of this model, the schematic of which was shown on *page 6–17 of Rider's Volume VI*. The value of R5 has been cut from 2 to 1 megohm (color, brown, black and green). The wattage rating is the same.

The other change is in the circuit of the 6H6 tube. Formerly both the plates P1 and P2 were connected. This connection is now opened. P1 now goes to the intersection of C8, R4 and R5. P2 is connected by the same green wire to the upper side of the secondary of the i-f. transformer, as it was before.

•

Pilot 243, C243, 245, C245

These numbers are used for models in which are incorporated the same chassis as were used in models 213 and 215, see *page 6–21 of Rider's Volume VI*. The change is the addition of a 6E5 tube connected in the circuit as shown in the accompanying partial schematic.

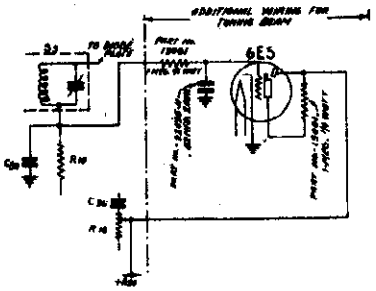

How the 6E5 tube is connected in the Pilot models mentioned in the text

To the left of the dot-dash line in the schematic are the points in the 213 or 215 circuit where the 6E5 is connected. On the right are the circuit elements used in conjunction with the tube.

To replace the tube in models 243 and 245, it is only necessary to remove the four corner bolts which hold the loud speaker. This gives access to the socket. On models C243 and C245, the 6E5 socket is held by a bracket, which can be removed when it becomes necessary to replace the tube.

Atwater Kent 856

Please note the following changes in the schematic on *A–K. page 6–45 in Rider's Volume VI.*

The resistance of R3 remains the same, but the wattage rating has been changed from one-half to one-third watt (color, brown, black and orange).

A condenser, designated as C15A, has been added. It is connected from the junction of the plate lead from the 6F5 (1st a-f. tube) with C–16, C–17, and R–13 to ground. It has a value of 120 mmf. (color, brown, red, and brown).

The connection between the plates, P1 and P2, of the 6H6, 2nd detector, has been opened. P2 now is connected to the junction of R5, the blue lead from the left-hand 0.05-mf. condenser in C9, and the black lead from point 9 on the antenna coil. The other plate goes to the same point as it did formerly on the i-f. transformer. (If you should happen to see a revised schematic of this receiver, note that the plate designations, P1 and P2, have been reversed. We use in the above explanation of the change, the designations as they appear in *Rider's Volume VI*, so that there will be no confusion.)

The value of R5 has been changed from 1 megohm to 0.5 megohm, same wattage rating (color, black and purple). The value of R6 has also been changed from 1 megohm to 0.5 megohm, 1/3 watt (color, green, black, and yellow).

•

Pilot X-43, X-45

The chassis which is used in these models has the same schematic as that shown on *page 6–2* of *Rider's Volume VI*. The range of the X–45 (export model) is 1680–545 kc. and 3[illegible]–140 kc.

The following Long-wave Alignment data should be added on *Pilot page 6–2x*: Procedure in the X–45 is similar to the Broadcast section. Align at 375 kc. and adjust the padder at 160 kc.

Should it be necessary to remove the band switch assembly, it is advisable to realign the receiver after reinstalling.

•

Silvertone 1570, 1574

The paper form on which the windings of the output transformer were wound in these models, apparently contained some chemical that caused electrolysis in the layer of wire next to this form. This trouble has been eliminated by winding the coils on a bakelite form or else putting a layer of empire cloth between the form and the winding. Also the windings are now preheated and a sealing compound is used.

If any of these models come in to you for repair, it is suggested that you replace the old transformer with one of the new type, Part No. R-6790-A and R-4337-F.

•

Stewart-Warner 56

This model receiver employed the chassis 105 or 105-A, the schematic of which was published on *page 3-3 of Rider's Volume III and page 2349 of the Rider-Combination Manual*. The letter "A" after a Stewart-Warner chassis number means that the receiver is for use on 110 volts, 60 cycles a.c.

•

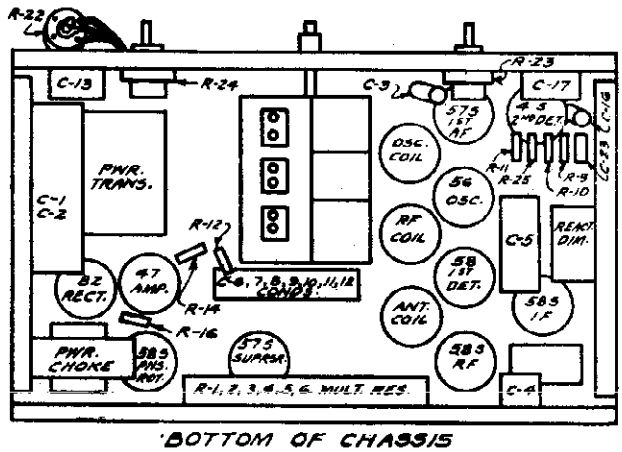

BOTTOM OF CHASSIS

The lower view of the Majestic chassis 300 and 300-A. Note the locations of the various coils, which will give you the positions of the trimmers.

•

Majestic Chassis 300 and 300-A

Models 303, 304, and 307 contain these chassis and the service data on them appear on *pages 3-18, 3-19, and 3-20 in Rider's Volume III and on pages 1210, 1211, and 1212 in the Rider-Combination Manual*. Chassis 300 is equipped with twin speakers and chassis 300-A has a single speaker. The accompanying sketch shows the bottom view of the chassis with the various parts designated by the number shown on the schematic.

Wells-Gardner 7G and OD Series

If the double end pointer remains stationary when the tuning knob is turned, the following possibilities should be investigated and procedure followed:

First, be sure that the tuning condenser rotor has not reached the end of its travel. Also, see if the screw at the center of the large pointer is tight. Next inspect each pointer to be sure that it is not caught at some place.

If slippage continues, remove the chassis from the cabinet. Turn the knob to the point where the shaft seems to bind. See if the drive shaft set screw is tight, and if the idler and idler spring are in position—See Fig. 2.

Take off the two pointers, the large one by taking out the pointer screw and the small micrometer pointer by unscrewing it off of the shaft (turn it counter-clockwise to do this). Turn the

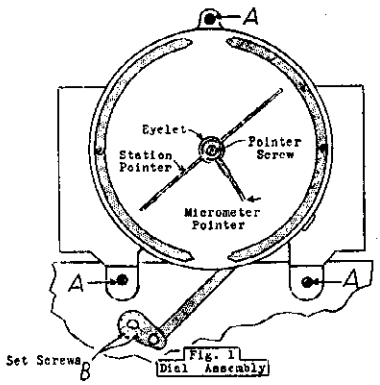

Fig. 1. Front view of the Wells-Gardner dial assembly.

tuning knob and see if pointer shaft turns properly. Inspect the shaft to determine if it is at the center of the eyelet in the dial scale. If the shaft appears to be binding against the eyelet, loosen the three screws A, Fig. 1, which hold the dial assembly in position. Shift this assembly until the shaft is centered, tighten the screws and again see if the shaft turns properly when the tuning knob is rotated.

If the shaft continues to stick, remove the dial assembly by taking out the three screws A and the two set screws, B—See Fig. 1. Turn the tuning condenser rotor and see if the pointer shaft wobbles. If it does, straighten it by pressing the shaft to one side.

Also, in a few of the dial assemblies there is a burr at the back edge of the eyelet which can bite into the shaft. If this is the case, take a small round file and file down the burr. A penknife can be used if no file is available.

See if the pointer shaft and tuning condenser rotor turn the entire length of travel. If they do, put the dial assembly back into position to again determine if the drive turns properly. If the shaft and rotor do not turn the entire length of travel, inspect the gears for dirt, damaged teeth and any obstruction to the rotor.

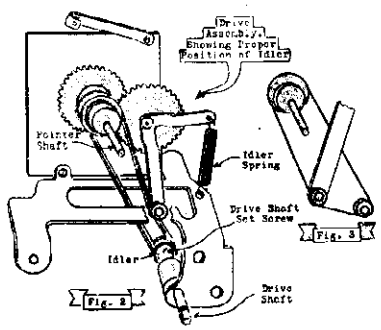

Figs. 2 and 3. Rear views of the Wells-Gardner dial assembly.

In some cases the belt may slip because it is too long. The best way to correct this condition is to put on a new belt. It can also be corrected in many cases by putting the idler on the inside of the belt as shown in Fig. 3. This method should be followed only as a last resort and is not, in general, as satisfactory as changing the belt. If the idler is moved to the inside of the belt, the idler spring may not be under sufficient tension to keep the belt tight. To remedy this, take the spring off, cut off a piece and again put it back in place. Care should be taken when reducing the spring length not to make the belt too tight as this would cause the drive to turn hard.

After the above procedure has been followed, the drive should operate properly after reassembling. If it does not, it will be necessary to get in touch with the factory for further instructions. See *Rider's Volume VI, page 6-20* for further data on the 7G series.

G.E. A-64, A-67

In the schematic diagram for Models A-64 and A-67, on *G.E., page 6-14 of Rider's Volume VI*, you will find a connection between the low side of L-6 and the high side of L-8 (oscillator coils). This connection should be deleted. In the parts list for these models, note that the capacity for C-5 (Stock No. RC-210) is listed as 50 mf. This is incorrect; it should be 50 mmf., as is shown on the schematic diagram mentioned above. The parts list will be found on *G.E. page* 6-18.

The electrostatic shield of the 0.05-mf. condenser (C-23) that shunts the bleeder resistor R-7-8-9, sometimes makes contact with the high-voltage a-c. terminal of the 5Z4 rectifier tube socket. This causes a decided a-c. hum, which has none of the characteristics of the a-c. hums usually encountered.

This condenser, C-23, is mounted near the high-voltage terminal of the rectifier socket and vibration in shipment and operation, or pressure accidentally applied when the chassis is being serviced, may cause it to be moved against the terminal. This brings the electrostatic shield (the layer of foil just under the outer layer of wax paper) in contact with the terminal.

Dressing the condenser away from the terminal so as to assure permanent clearance, will eliminate the hum.

●

Philco 10

Run No. 3. A ground strap was added (Part No. 9481) from tuning condenser housing to receiver housing.

Run No. 8. The first and second i-f. transformers, Parts No. 16 and 25, were replaced with new types having the same part numbers. They can be identified by the red paint marks on the spools.

See Philco page 4-56, Rider's Volume IV.

●

Philco 10-Code 122

Run No. 2. Condenser Part No. 61 (50 mmf.) was removed and Part No. 30-1032 (250 mmf.) was added.

Run No. 3. The first i-f. transformer, Part No. 18, was replaced with a new type, having the same part number. This can be identified by the green paint marks on the fibre.

Run No. 4. Resistor, Part No. 23 (500 ohms) was removed and Part No. 6443 (700 ohms) was added.

For schematic diagram see Rider's Volume V, Philco page 5-5.

●

Philco-Pierce Arrow MT-3 and Philco-Reo RT-3

Run No. 1. An antenna choke, Part No. 32-1372, No. 75, has been added. It is connected in series with the antenna lead and the antenna transformer No. 1 and condenser No. 2.

Run No. 3. Wire the white lead of the output transformer directly to the plate of the 42 tube socket instead of to the pin jack.

Run No. 4. Tone control, No. 56, removed. Part No. 30-4298 added. When using this new tone control, condenser No. 47 is also removed.

See Philco pages 6-99 and 6-102 in Rider's Manuals for data.

Stromberg-Carlson 29

The chassis wiring diagram of this model, which appears on *page 2-15 of Rider's revised Volume II; page 614-R of the early edition; and page 2401 of the Rider-Combination Manual,* is not clear in one or two places. So that no doubt will be in your mind when checking over two of the condenser banks,

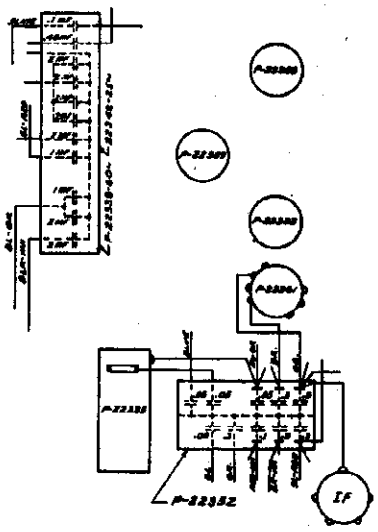

Condenser banks of Stromberg Model 29

we are showing herewith enlarged drawings of the bank having eleven condensers, in the upper right-hand side of the diagram, and the nine-condenser bank that is shown in about the middle of the page. You can identify their positions on the wiring diagram by the apparatus in the vicinity and by the color and position of the leads. Notice that the top of the sketch shown here goes to the right-hand side of the diagram in your Manual.

Philco Model 144

Effective April 15, 1935 the center tap is removed from the filament winding on the power transformer. If a hum is experienced in reception, connect a 20-ohm, wire-wound resistor across the filament winding, with center tap of resistor grounded. This set is shown on page 5-41 in Rider's Manual Volume V.

●

"X" Models In The Sparton Line

Some of the Sparton model numbers conclude with the letter "X". The following data will no doubt be of value when seeking equivalent circuits in Rider's Manuals. In some instances, the "X" denotes a receiver intended for export sale and containing a special power transformer. In other cases, the letter "X" denotes some addition to the basic circuit.

Model 27-X is the model 18 chassis used in a model 27 cabinet. (Rider Manuals Sparton page 3-10, 3-11, 4-2, 4-3.)

Model 67-X is the same as the model 67 with a special power transformer and is intended for export. (Rider Manual Sparton 5-10, 5-11, 5-12.)

Model 73-BX is an export model.

Model 80-X is the same as the model 80, with a special power transformer and is intended for export. (Rider Manual Sparton 5-15, 5-16, 5-17, 5-18.)

Model 81-X is the same as the model 81, with the addition of a wave trap. (Rider Manual Sparton 4-16.)

Model 82-X is the same as model 82, with the addition of a wave trap. (Rider Manual Sparton page 4-17.)

●

Stromberg-Carlson 55, 56

The i-f. peak of these models, the schematic of which appears on *page 4-10 of Rider's Volume IV,* is 175 kc. Please make a notation of this on the above-mentioned schematic.

●

Bosch 239

Please make a note that Model 239 is similar electrically to the Bosch models 236 and 237, the servicing data on which are found on *page 3-11 in Rider's Volume III and on page 2531 in the Rider-Combination Manual.* This Model 239 was used in a table installation and the only difference between it and the other models mentioned is that the antenna and ground leads were braided together with the power supply cord in Model 239.

●

Howard Grand

Please make a notation that the power unit shown on *Howard page 6-16 of Rider's Volume VI* is for Series 2 of this model, as well as Series 1.

Packard Bell 34

If this set should need to be readjusted, the procedure is as follows: Set dial to about 1700 kc. and connect the output of a signal generator, set at the same frequency, to the antenna. Adjust the trimmer condensers of the r-f. and detector stages for maximum output. All adjustments at 1000 kc. and 600 kc. are made by bending the outside rotor plates of the variable condenser tuning the r-f. stage. The schematic diagram of this receiver will be found on *page 6-4 of Rider's Volume VI.*

●

Crosley 815

We have received word from the manufacturer that no servicing data has ever been issued for the 815, but if you get one in the shop look up Model 8B3, on *page 6-10 in Volume VI of Rider's Manuals.* We are advised that the 8B3 is practically the same as the 815.

●

Atwater Kent 145, 325

The schematic diagram shown on *page 5-7 of Rider's Volume V* is for the early model but the note at the bottom of the diagram covers the changes that were made in the late model. The elimination of the condenser, C4, in the frequency-changing switch in the late models necessitated a rearrangement of the parts. The chassis layout for the late model is shown in the accompanying illustration.

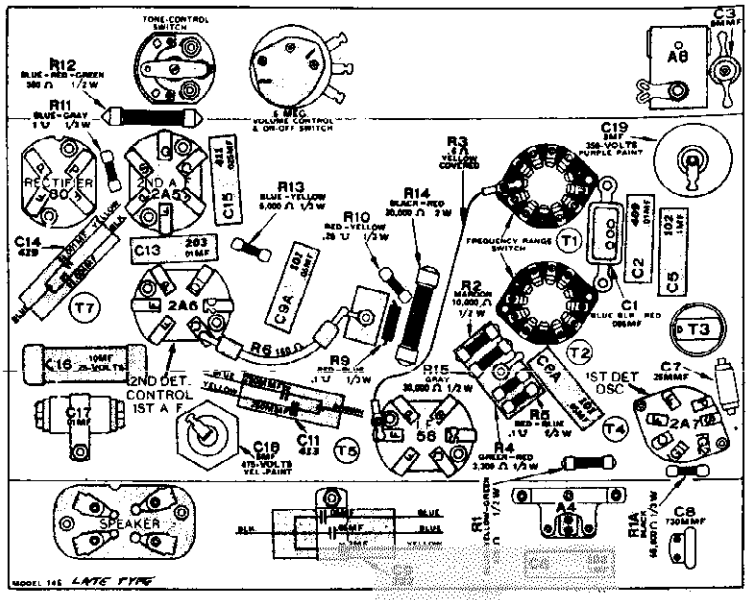

The bottom view of the chassis used in Atwater Kent Models 145 and 325 of the late type

Wells-Gardner 7A Series Chassis

In a few receivers of this model, the tone control condenser C-9, 0.05 mf., 400 volts, has broken down. When this occurs the output plate voltage is applied across the tone control resistor and in many cases the resulting current burns the tone control. For this reason, if it is necessary to replace the condenser or the tone control resistor in this model; connect the side of the condenser which formerly went to ground to the +B end of the output transformer primary, as shown in Fig. 1.

This connects the tone control condenser and resistor across the primary of the output transformer. In this

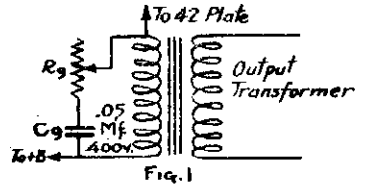

Fig. 1

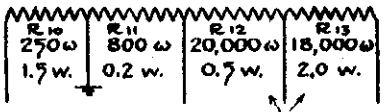

Fig. 2

Fig. 1. New connections for tone-control circuit of Wells-Gardner 7A chassis.
Fig. 2. Resistor values of four-section unit.

method of connection, should the tone control condenser break down, no damage will be done to the resistor.

In case either the 18,000 or the 20,000-ohm section of the four section armoured wire-wound resistor becomes open, it is unnecessary to replace the entire resistor. A separate 18,000 ohms, 2 watt or 20,000 ohms, 0.5 watt carbon resistor may be used. DO NOT USE THE OLD LUGS OF THE WIRE WOUND RESISTOR TO MOUNT THE CARBON RESISTORS, AS THE OLD UNIT MAY HAVE AN INTERMITTENTLY OPEN CONNECTION. If one of these two sections, as mentioned, becomes open, it will be best to replace both of them. The values of the four sections of this unit are given in Fig. 2.

If the entire four-section unit is replaced, the old mounting holes and the old wiring connections are used. However, if the separate 18,000 and 20,000-ohm carbon resistors are used, they are mounted and connected as shown in

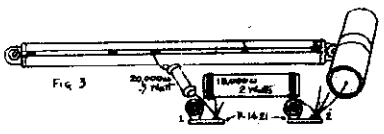
Fig. 3

Method of mounting and replacing resistors in Wells-Gardner 7A Series chassis. See Fig. 2.

Fig. 3. Two single terminal mounting strips can be used for the wiring connections. The leads, which connected to terminals No. 1 and No. 2 on the old unit, are connected to the separate terminals marked No. 1 and No. 2 in the illustration.

P-98002A. 4 Section Resistor (2 wire wound, 2 carbon)
P-D-94183. 18,000-ohm, 2 watt resistor
P-B-94203. 20,000-ohm, 0.5 watt resistor
P-1421. Single terminal Mounting strip

●

Silvertone 1904, 1906, 1908, 1911, 1914, 1938, 1954, 1964, 1984

Several changes have been made in the chassis used in the above models and they should be noted on the schematic, appearing on *Sears page 6-45 of Rider's Volume VI.*

The resistor, Rl, has been changed from 30,000 ohms to 40,000 ohms. R3 has been increased from 5000 to 20,000 ohms. R5 has been decreased from 50,000 ohms, 0.5 watt, to 25,000 ohms, 1 watt. This last change was made to correct motorboating that was sometimes experienced on the s-w. band "C," due to the 6A7 tube variations.

A tone control circuit has been added. One side of a 0.02-mf. condenser is connected to the lead coming from the grid of the 6F6 to the 200,000-ohm resistor, Rll, and the other side of this condenser is connected to one side of the 500,000-ohm tone control. The variable arm is grounded.

A condenser, 0.1 mf., 300 volts, has been shunted across the 8-mf. condenser, C20.

Metal glass tubes are used in the i-f., a.v.c., and output stages. These tubes are the same types as shown on the schematic in *Rider's Volume VI.*

Note the added model numbers above that should be included in your Volume VI index.

●

G.E. M-106 Changes

A change is recorded in the G.E. M-106 receiver. The type 76 tube originally used as the 2nd detector and AVC, has been replaced by a type 1-V tube. R-16 in the diagram, originally 1,000,000 ohms, now is 1,100,000 ohms. The G.E. M-106 is referred to in Rider's Manual Volume V, as the RCA 262, shown on page 5-103 in the RCA section.

●

RCA RAE-68

The RAE-68 receiver employs the model 82 Radiola 82 chassis with remote control and the automatic electric phonograph.

●

Sparton Chassis Similarities

It is possible that some Sparton models may come in for service and that you will not be able to identify the exact chassis because of some suffix letter which may appear in conjunction with the model number. Accordingly, it might be well if you added the following data to your Rider Manual Index:

Models 57-A and 57-B are basically the same as the model 57, shown on page Sparton 5-3, 5-4 and 5-5.

The model 81-A is basically the same as model 81, shown on page Sparton 4-18 in Rider's Manual.

The model 105 is basically the 104, shown on page 5-19 and 5-20 in Rider's Manual Volume V.

●

Radiola 62

The values of the tapped resistor strip and the volume control of the Radiola 62 were omitted from the manufacturer's schematic. These values are shown in the accompanying illustration. The part

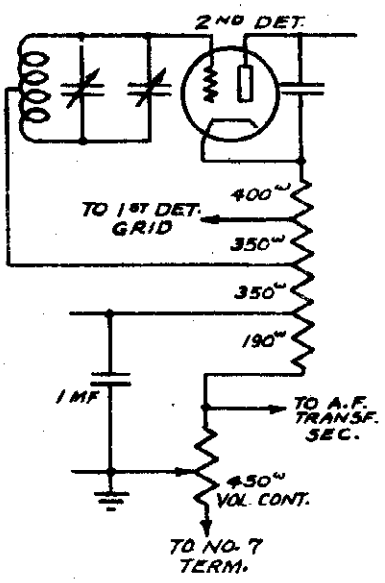

Values of resistor strip and volume control of Radiola 62

number of the tapped resistor is 5810 and that of the volume control is 5811.

The schematic for this receiver will be found on *RCA page 1-40 in the revised edition; page *497 in the early edition, and on page 1878 of the Rider-Combination Manual.*

●

Philco Model 32

Starting with Run No. 6, the part number of the volume control is changed from 33-5063 to 33-5004, and the wave-band switch from 42-1017 to 42-1123. This makes the design and connection of these parts the same as in Model 89. See Rider's Manual, Volume V, page 5-17.

RCA R-10 DC

With the exception of the interlock, the R-10 DC is identical with the R-7 and R-9 DC chassis, shown on pages RCA 2-8, 2-9 and 2-10 in Rider's Manual, Volume II, pages 504-D-3 and 504-D4 in the early issues and on pages 1772, 1773 and 1774 in the Rider-RCA Combination Manual.

●

RCA RE-16

The RCA RE-16 receiver employs the standard R-7, R-9 AC Superette chassis already listed in Rider's Manual. To this chassis is added the phonograph motor, pickup and volume control. Service information other than those relating to replacement parts can be had by referring to the service notes covering the Superette and the Radiola 86 receivers.

In view of the absence of phonograph pickup connection to the Superette receiver, the pickup leads in the RE-16 are connected to terminals 1 and 2, the connecting link being removed. The ground connection upon the shielded lead is joined to terminal 4. The d-c. resistance of the pickup coil is 4.5 ohms. The pickup volume control is 60 ohms. The input transformer is tapped and the following values of d-c. resistance apply. Between terminals 1 and 2, 3.2 ohms; between terminals 2 and 3, 150 ohms, and between terminals 3 and 4, 4300 ohms. The connections of the pickup correspond with the data shown for the RE 16-A receiver, shown on pages RCA 4-19 and 4-20.

●

Crosley 5V2 and 5A3

The i-f. peak in these receivers is 181.5 kc. The alignment and servicing procedure for the 5V2 is the same as that for the 5V1, shown on pages Crosley 5-21 and 5-22 in Rider's Manual, Volume V. The circuit is substantially the same except for the addition of a 2,000-ohm resistor between the moving arm of switch 48 and the terminal which is a part of switch 48 and which connects to the low end of the input coil to the mixer portion of the 6A7. The voltage for the 5V2 is the same as that for the 5V1, shown in Rider's Manual.

●

Airline Model 62-166

The present production of these receivers differs from the early runs. In the early models the plate circuit of the 75 triode, contained only the plate coupling resistor of 150,000 ohms. In the later models a plate filter resistor of 50,000 ohms was added. In addition a .25-mfd. bypass condenser, which bypassed this plate filter resistor, was also added.

In the early models the capacity range of the trimmers used across the windings of the first i-f. transformer, was 150 to 300 mmfds.

●

Majestic 400

The receiver schematic appears upon page Majestic 3-42 and in the RCA-Rider Combination Manual on page 1234.

In some receivers the 250-ohm resistor R-3 and the 2000-ohm resistor R-11 were replaced by a 160-ohm and a 2500-ohm resistor respectively. The purpose of this was to make the G-57A-S modulator tube oscillate more readily. If a 250-ohm and a 2000-ohm resistor are used in the receiver, it may be necessary to try two or three different tubes in this stage, when replacement is being made, before a tube is found, which will oscillate readily over the entire frequency band. If trouble is experienced along this line, the changing of either one or both of the resistors mentioned should eliminate the difficulty.

Condenser C-17 will be found to have a value of .05 mfd, in a number of receivers; however, it should be replaced with a .1-mfd unit, as shown in the schematic.

Silvertone 1840, 1842 Oscillator Plate Resistor

In some instances, the 10,000-ohm wire-wound resistor in the oscillator plate circuit of the models 1840 and 1842 opens during operation. The cause of the breakdown is mechanical, rather than electrical. Apparently, the form on which the resistance wire is wound expands sufficiently during operation to break the wire. If this break occurs during operation, a small arc occurs at the point of open, making a burnt mark upon the resistor and creating the impression that the unit failed due to overload. As has been stated, such is not the case. At any rate, replacement should be made with a 10,000-ohm carbon resistor rated at 2. watts and bearing part No. R10465.

●

Montgomery-Ward Models 62-185, 62-187, 62-190, 62-196

In the early models 6D6 and 42 glass tubes were used. These have been replaced by the metal tubes, 6K7 and 6F6 respectively.

●

Silvertone 1720, 1725, 7065

Any trouble due to hum in these models can be eliminated by performing the following operations, the purpose being to add an additional section of filtering to the power supply.

Enlarge the hole in the chassis near the power transformer to about 0.25 inch diameter, as indicated in the illustration.

Remove the cover of the power transformer. To do this, it is first necessary to remove the four nuts on the under side of the chassis and then to unscrew the bolts that pass through the laminations. The tone control and switch will have to be dismounted in order to get at one of the transformer's nuts.

Mount a Part No. R10793B choke on top of the power transformer in place of the original transformer cover. Be sure to mount the choke so that its leads can come down through the enlarged hole in the chassis. Also be sure to tighten the bolts well, in order

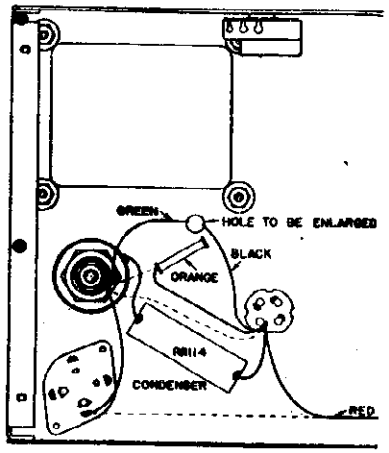

Changes to be made in Silvertone Models 1720, etc.

to prevent hum. Then remount the transformer and choke assembly on the chassis and remount the tone control.

Make the wiring changes indicated in the illustration. The dotted lines represent the original wiring, which is to be changed and the solid lines show the new connections. Note that a new part, a 2-mf., 440-volt, dry electrolytic condenser, Part No. R11114, is added.

See page 4-22 of Rider's Manual for schematic diagram.

Sparton Models 61, 62

A 50-ohm, 2-watt resistor, Part No. B-6061-1, has been added in series with the plate lead of the 25Z5 that is drawn nearest the speaker field in the schematic diagram, shown on Sparton page 4-11 in Rider's Volume IV. This resistor protects the 25Z5 tube against voltage surges.

It is advisable to put this resistor in any Models 61 and 62 not so equipped that you may service.

Silvertone 1590, 1592

Several changes have been made in the chassis used in this model, the schematic of which appears on *page 3-8 in Rider's Volume III and page 2094 of the Rider-Combination Manual.*

The first detector has been changed from a 57 type to a 58, which improves the volume control action. The second i-f. transformer has been replaced with one whose secondary is tuned by a condenser mounted under the chassis. Some of the receivers have a hole in the chassis end plate to make this condenser accessible. In other sets, it is necessary to remove the end plate.

The cathode circuit of the 58 (first detector) has been changed. The cathode formerly went to ground through a 2000-ohm resistor. This resistor has been increased to 5000 ohms, and, in addition, a 0.1-mf. condenser has been inserted between the cathode and this resistor. Also a 5000-ohm resistor has been connected between the cathode and the junction of the 150-ohm and 50,000-ohm resistors. The 0.001-mf. condenser, which formerly was connected between the cathode of the oscillator tube and the oscillator coil, has its connections changed. One side still is connected to the 0.1-mf. condenser and the oscillator coil, but the other side goes directly to the junction of the cathode and suppressor of the 58 first detector tube.

The 20,000-ohm resistor connected between the screen of the first detector and the high-voltage supply (the filament of the 80 rectifier) has been changed to 30,000 ohms.

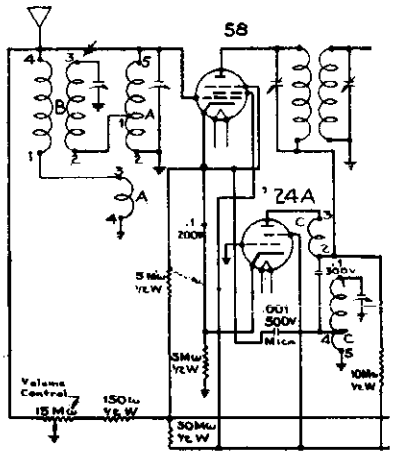

Fig. 1. The first detector and oscillator circuits of the revised Silvertone model 1590 and 1592.

In Fig. 1 is shown the first detector and oscillator circuits in which are located some of the changes mentioned above. Also note the numbering of the various coils, which correspond to the numbering on the schematics of the coils as shown in Fig. 2. In most cases

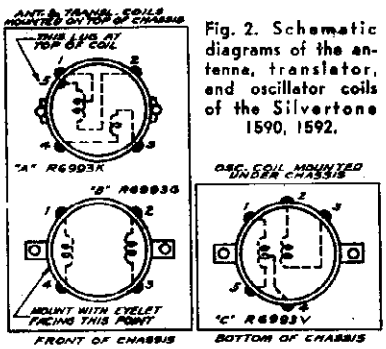

Fig. 2. Schematic diagrams of the antenna, translator, and oscillator coils of the Silvertone 1590, 1592.

it is clear in the schematic diagram (Fig. 1) where the various connections from the coils go, but where there is any doubt, the following notations may be of aid:

Coil "A":

Lug No. 2 is connected to the center terminal of the volume control.

Lug No. 5 is connected to the stator, middle variable tuning condenser unit, and the grid clip of the first detector.

Coil "B":

Lug No. 3 is connected to the stator, No. 1 (shaft end) of the variable tuning condenser unit.

Coil "C":

Lug No 5 is connected to the frame of the variable tuning condenser.

•

Silvertone 1584 and 1640

If any trouble is experienced with the 0.003-mf. condenser connected across the primary of the power transformer, breaking down, it has probably been due to a surge built across the transformer primary when the line switch is opened (set turned off).

To correct this difficulty, an 800-volt condenser is replacing the one of 600-volt rating used heretofore. This new condenser (Part No. R-6461, 800 V.) is connected between the line side of the on-off switch and the receiver chassis. Although these condensers may be marked 500 volts, they are really 800 volts and can be identified by the daub of yellow paint.

Westinghouse WR-21

Intermittent oscillator operation in this model may be due to a high resistance ground return in the oscillator coil. The coil is grounded through a spade terminal, this being one of the two spade terminals mounting the coil in its aluminum can. The can is riveted to a strap which in turn is screwed to the chassis. Apparently the oxide film on the aluminum causes the high resistance contact and the consequent intermittent operation. The repair can be made by drilling another hole in the can bringing out a ground wire. The schematic for this receiver will be found on *page 5-2 in Rider's Volume V.*

Kolster K-60

In the resistance test data appearing on *page 2-4 of Rider's Volume II and on page 1455 of the Rider-Combination Manual,* the resistance from the plate of the 47 tube to chassis is given as 850 ohms. This reading should be 7300 ohms. Please make this correction in your Manual. Thanks.

•

G.E. A-70, A-75

In the earlier models of the A-70 and A-75's it will be noted that the diode plate lead (green rubber covered) is soldered to one of the lugs of the second i-f. transformer. If for any reason it is necessary to remove or replace this transformer or wire, it is important that the wire be dressed as far as possible toward the front of the chassis to obtain full sensitivity. Sets carrying later serial numbers have this lead tied to the center tap of the coil inside the can. However, it is still necessary to keep it toward the front of the chassis to prevent a feed-back between the plate dropping resistor between the first and second i-f transformers, and the lead itself.

For schematic, see *G. E. page 6-19, Rider's Volume VI.*

•

Crosley 161 and 8B1

We are advised by the manufacturer that only a comparatively few of this model were made and that it is practically the same as Crosley Model 160, the servicing data on which will be found on *page 3-32 of Rider's Volume III and on page 756 of the Rider-Combination Manual.*

Model 8B1 is practically the same as Model 143. See *page 4-7 of Rider's Volume IV* for servicing data.