Service
Service
Service

Service Manual

GB

TECHNICAL DATA

Mains voltage	110-127-220-240 V, 50 Hz
Power consumption (maximum)	36 W
Output power (d = 10 %)	2x7 W
PU heads	GP390-GP400-GP401
Loudspeaker box for "Ambio"	22RH430
Loudspeaker impedance	4 Ω
Impedance of headphone output	600 Ω
Input sensitivity, tuner	300 mV/1 MΩ
Input sensitivity, PU	400 mV/1 MΩ
Record player	22GC007 (22GF907/05/15) 22GC027 (22GF907/05S/15S)

NL

TECHNISCHE GEGEVENS

Netspanning	110-127-220-240 V, 50 Hz
Opgenomen vermogen (max.)	36 W
Uitgangsvermogen (d = 10 %)	2x7 W
PU koppen	GP390-GP400-GP401
Luidsprekerkast voor "Ambio"	22RH430
Luidsprekerimpedantie	4 Ω
Impedantie koptelefoonuitgang	600 Ω
Ingangsgevoeligheid tuner	300 mV/1 MΩ
Ingangsgevoeligheid PU	400 mV/1 MΩ
Platenspeler	22GC007 (22GF907/05/15) 22GC027 (22GF907/05S/15S)

F

CARACTERISTIQUES TECHNIQUES

Tension secteur	110-127-220-240 V, 50 Hz
Puissance absorbée (max.)	36 W
Puissance de sortie (d = 10 %)	2x7 W
Têtes de PU	GP390-GP400-GP401
Boîtier haut-parleur pour "Ambio"	22RH430
Impédance haut-parleur	4 Ω
Impédance sortie écouteur	600 Ω
Sensibilité d'entrée tuner	300 mV/1 MΩ
Sensibilité d'entrée PU	400 mV/1 MΩ
Tourne-disques	22GC007 (22GF907/05/15) 22GC027 (22GF907/05S/15S)

D

TECHNISCHE DATEN

Netzspannung	110-127-220-240 V, 50 Hz
Leistungsaufnahme (maximal)	36 W
Ausgangsleistung (d = 10 %)	2x7 W
TA-Köpfe	GP390-GP400-GP401
Lautsprechergehäuse für "Ambio"	22RH430
Lautsprecherimpedanz	4 Ω
Impedanz des Kopfhörerausganges	600 Ω
Eingangsempfindlichkeit des Tuners	300 mV/1 MΩ
Eingangsempfindlichkeit des TA	400 mV/1 MΩ
Plattenspieler	22GC007 (22GF907/05/15) 22GC027 (22GF907/05S/15S)

Index: CS39751-CS39755

Safety regulations require that the set be restored to its original condition and that parts which are identical with those specified, be used.

Documentation Technique Service Dokumentation Documentazione di Servizio Huolte-Ohje Manual de Servicio Manual de Serviço

PHILIPS

Subject to modification
4822 726 11311
Printed in The Netherlands

PHILIPS

(I)

DATI TECNICI

Tensione di rete	110-127-220-240 V, 50 Hz
Potenza assorbita (massima)	36 W
Potenza d'uscita (distorsione = 10 %)	2x7 W
Testine PU	GP390-GP400-GP401
Cassette acustiche per "Ambio"	22RH430
Impedenza dell'altoparlante	4 Ω
Impedenza di uscita per cuffia	600 Ω
Sensibilità d'ingresso sintonizzatore	300 mV/1 MΩ
Sensibilità d'ingresso PU	400 mV/1 MΩ
Giradischi	22GC007 (22GF907/05/15) 22GC027 (22GF907/05S/15S)

(S)

TEKNISKA DATA

Nätspänning	110-127-220-240 V, 50 Hz
Effektförbrukning (max.)	36 W
Uteffekt (d = 10 %)	2x7 W
Pick-up huvuden	GP390-GP400-GP401
Högtalarlåda för "Ambio"	22RH430
Högtalarimpedans	4 Ω
Hörtelefonimpedans	600 Ω
Ingångsimpedans tuner	300 mV/1 MΩ
Ingångsimpedans PU	400 mV/1 MΩ
Skivspelare	22GC007 (22GF907/05/15) 22GC027 (22GF907/05S/15S)

(N)

TEKNISKE DATA

Nettspenninger	110-127-220-240 V, 50 Hz
Effektforbruk (maksimum)	36 W
Utgangseffekt (d = 10 %)	2x7 W
PU-hoder	GP390-GP400-GP401
Høyttalerkabinett for "Ambio"	22RH430
Høyttalerimpedans	4 Ω
Impedans på hodetelefonutgang	600 Ω
Ingangsfølsomhet tuner	300 mV/1 MΩ
Ingangsfølsomhet PU	400 mV/1 MΩ
Platespiller	22GC007 (22GF907/05/15) 22GC027 (22GF907/05S/15S)

(E)

DATOS TECNICOS

Tensión de red	110-127-220-240 V, 50 Hz
Potencia de consumo (max.)	36 W
Potencia de salida (d = 10 %)	2x7 W
Cabezas fonocaptoras	GP390-GP400-GP401
Caja de altavoz para "Ambio"	22RH430
Impedancia de altavoz	4 Ω
Impedancia de salida de auriculares	600 Ω
Sensibilidad de entrada, sintonizador	300 mV/1 MΩ
Sensibilidad de entrada, tocadiscos	400 mV/1 MΩ
Tocadiscos	22GC007 (22GF907/05/15) 22GC027 (22GF907/05S/15S)

(DK)

TEKNISKE DATA

Netspændinger	110-127-220-240 V, 50 Hz
Indgangseffekt	36 W
Udgangseffekt	2x7 W
Pick-up's	GP390-GP400-GP401
Højttalerbox for "Ambio"	22RH430
Højttalerimpedans	4 Ω
Impedans, hovetelefonudgang	600 Ω
Indgangsfølsomhed, tuner	300 mV/1 MΩ
Indgangsfølsomhed, pick-up	400 mV/1 MΩ
Pladespiller	22GC007 (22GF907/05/15) 22GC027 (22GF907/05S/15S)

(SF)

TEKNILISET TIEDOT

Verkkojännite	110-127-220-240 V, 50 Hz
Kulutus	36 W
Lähtöteho	2x7 W
Äänipäät	GP390-GP400-GP401
Kaiutinkotelo "Ambio"	22RH430
Kovaäänisimpedanssi	4 Ω
Lähtöimpedanssi kuulokkeet	600 Ω
Sisäänmenoherkkyys, viritin	300 mV/1 MΩ
Sisäänmenoherkkyys, äänirasia	400 mV/1 MΩ
Levysoitin	22GC007 (22GF907/05/15) 22GC027 (22GF907/05S/15S)

Signal to		Controls	Indication	Adjust	Indication
1 kHz 66 mV	BU.T 5 4 2 3 1	R451 - max. R452 - 0 R453 - 0 R454 - 0 SKA - T	L 4 5 V	R455	V.U. - L max.
1 kHz 66 mV	BU.T 5 4 2 3 1	R451 - max. R452 - 0 R453 - 0 R454 - 0 SKA - T	R 4 5 V	R456	V.U. - R max.

CS39751

C	726 728 732 736 740 734 738 742 744 746 748 750 752 754 756 758 1 762 760 764 766 770 768 774 772 826 828 782 784
	727 729 733 737 741 735 739 743 745 747 749 751 753 755 757 759 2 763 761 765 767 769 771 775 773 786 787 780a 780b 781 785 783 776 730
R	526 530 532 544 540 548 546 542 534÷537 550÷553 554 556 558 451a 560 452a 562 564 566 453a 568 570 454a 572 574 576 578 580 582 584 586 590 588 681 682 687 683 685 686 490 455 602 604 502 538 510
	527 531 533 545 541 549 547 543 555 557 559 451b 561 452b 563 565 567 453b 569 571 454b 573 575 577 579 581 583 585 587 589 591 503 601 456 603 605 501
MISC.	TS426 TS428 SK-A TS430 TS432 TS434 TS436 TS481 TS482÷484 TS485a TS486a D445 D447 M407 SK-D
	TS427 TS429 TS431 TS433 SK-E SK-I Z461 M SK-F TS435 SK-C T406 SK-G LA409 TS437 LA410÷413 Z458 D440÷443 TS485b D489 TS486b D444 Z459 Z460 D446 D448 M408

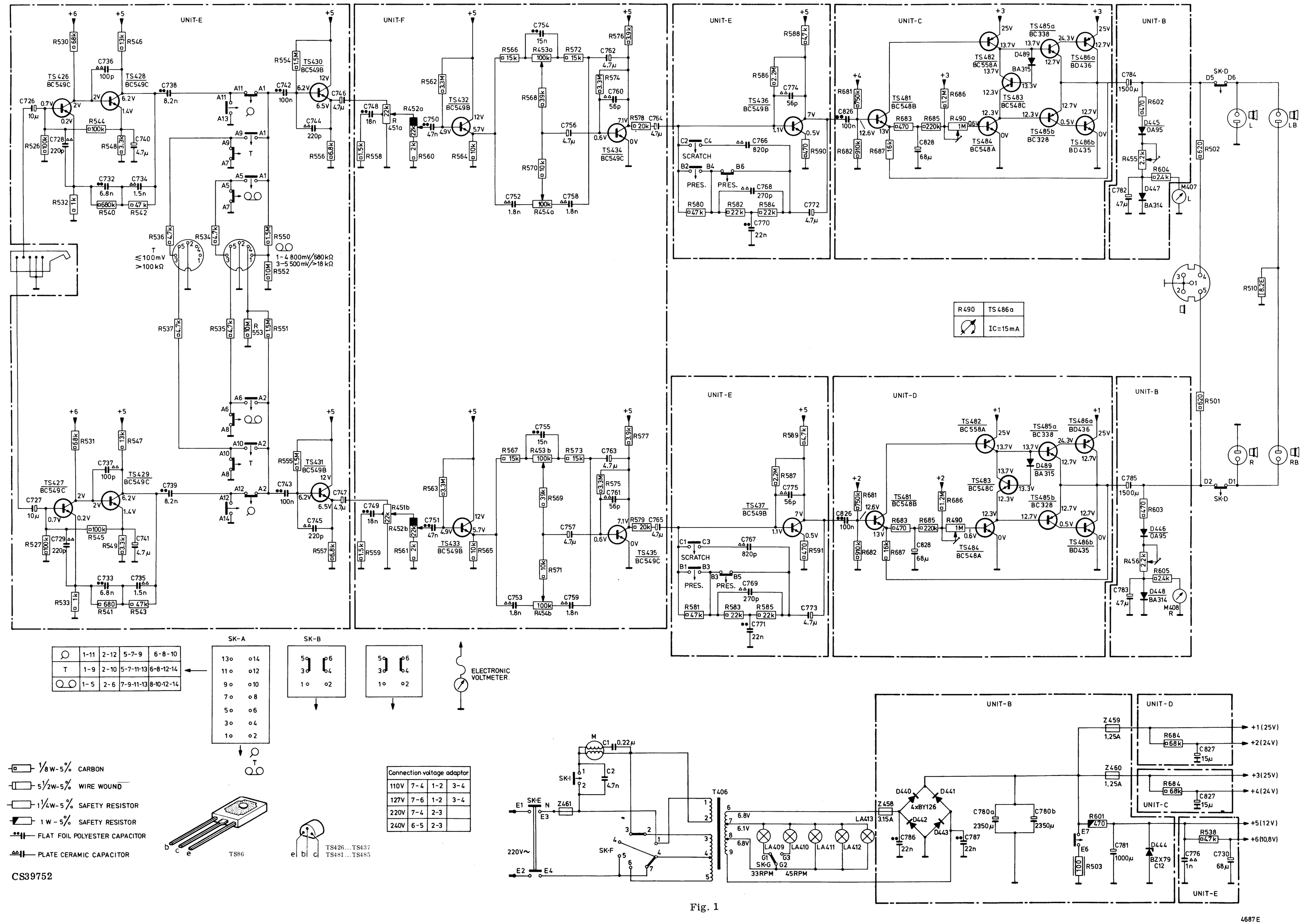

Fig. 1

4687 E

| | | |

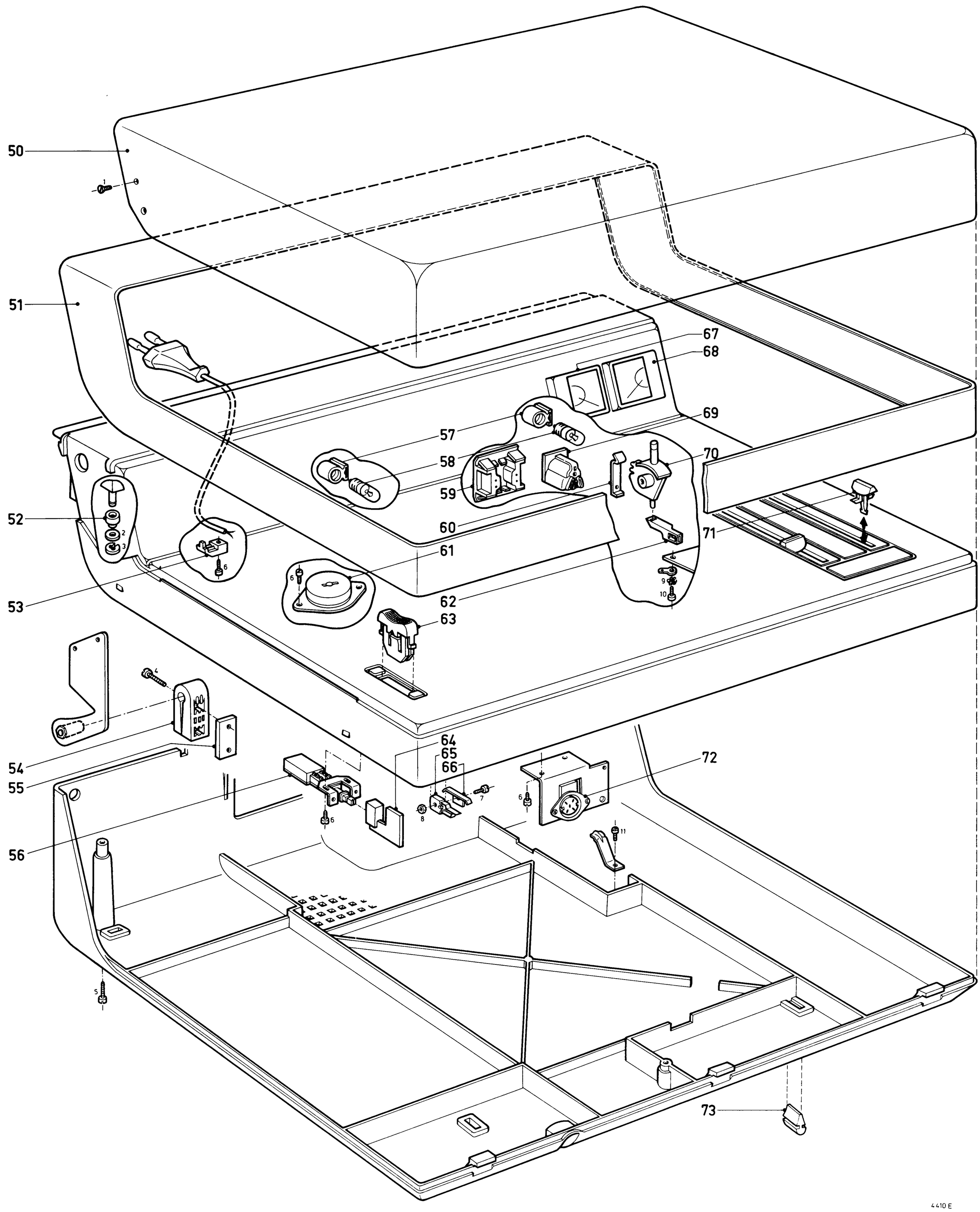

Fig. 3

1	4822 502 11191	50	4822 444 30208	61	4822 272 10079	72	4822 267 40192
2	4822 532 10252	51	4822 444 30207	62	4822 403 30236	73	4822 462 40245
3	4822 530 70123	52	4822 325 60137	63	4822 410 21533		
4	4822 502 10695	53	4822 401 10674	64	4822 278 80165		
5	4822 502 11125	54	4822 290 40151	65	4822 278 90008		
6	4822 502 30085	55	4822 417 10544	66	4822 492 61162		
7	4822 502 10814	56	4822 276 10504	67	4822 346 10077		
8	4822 505 10492	57	4822 255 10007	68	4822 346 10078		
9	4822 530 80082	58	4822 134 40003	69	4822 267 40133		
10	4822 502 10558	59	4822 267 20123	70	4822 411 50363		
11	4822 502 84005	60	4822 492 61973	71	4822 411 50362		

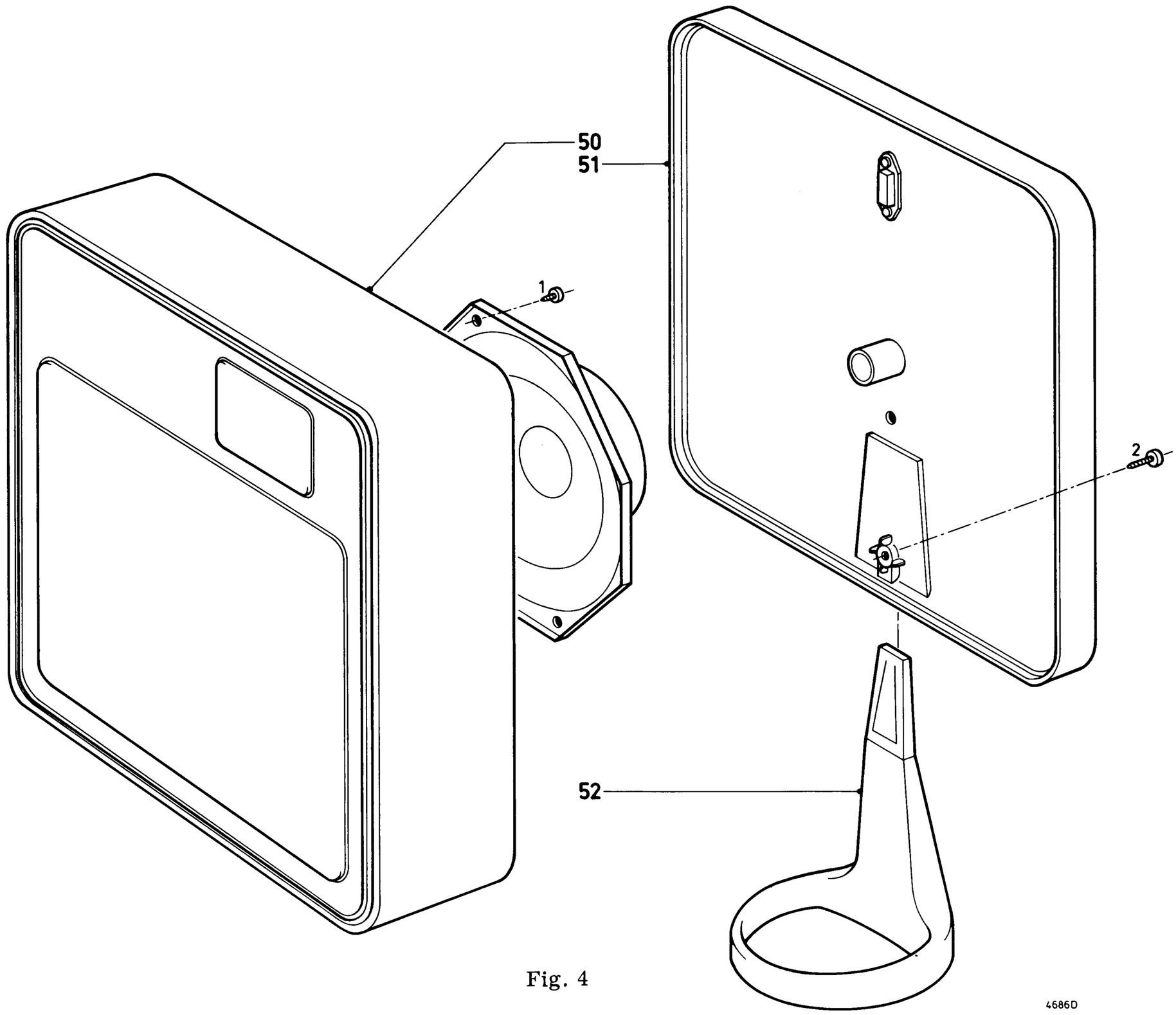

Fig. 4

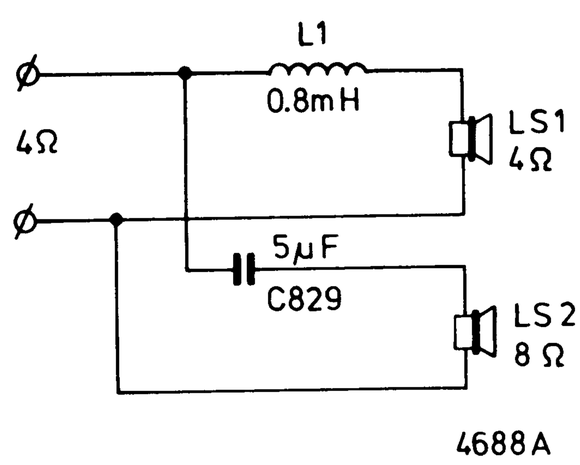

Fig. 5

1	4822 502 30095	(N3.5x5/16")
2	4822 502 30076	(N3.5x5/8")
50	4822 420 40272	
51	4822 421 40056	
52	4822 462 10183	

T406		4822 145 20205
SK A		4822 277 30574
SK B-SK C		4822 273 30186
SK E		4822 276 10504
SK F		4822 272 10079
SK G		4822 278 90008
LA409...413		4822 134 40003
M407 (L)		4822 346 10077
M408 (R)		4822 346 10078
Z458	3.15 A	4822 253 30027
Z459-460	1.25 A	4822 253 20019
Z461		4822 252 20007
Unit C-D		4822 214 50121
L1	0.8 mH	4822 152 10082
LS1	4 Ω	4822 240 50076
LS2	8 Ω	4822 240 30075

TS426...429-434-435	BC549C	5322 130 44216
TS430...433-436-437	BC549B	4822 130 40936

D440...443	BY126	5322 130 30192
D444	BZX79/C12	5322 130 34069
D445-446	OA95	5322 130 30191
D447-448	BA314	4822 130 30879

R451a-b	22 kΩ log.	4822 105 10163
R452a-b	22 kΩ bal	4822 105 10164
R453a-b, R454a-b	100 kΩ lin	4822 105 10165
R455-456	2 kΩ	4822 100 10029
R503	100 Ω	4822 111 50134

C726-727	10 μF - 25 V	4822 124 20475
C730	68 μF - 16 V	4822 124 20473
C780a-b	2350 μF - 40 V	4822 124 70226
C781	1000 μF - 16 V	4822 124 20524
C782-783	47 μF - 4 V	4822 124 20582
C784-785	1500 μF - 16 V	4822 124 20525
C829	5 μF	4822 124 40079
C740-741-746-747 756-757-762-765-772 773	4.7 μF - 63 V	4822 124 20494

C1	0.22 μF - 400 V	4822 121 40181
C2	4700 pF - 400 V	4822 121 10113

MISC	TS484,485b,486b	TS483 D489	TS485a,481,486a,482
C	828	826	827
R		490	685 683 682 683 681 686 684

Unit C-D

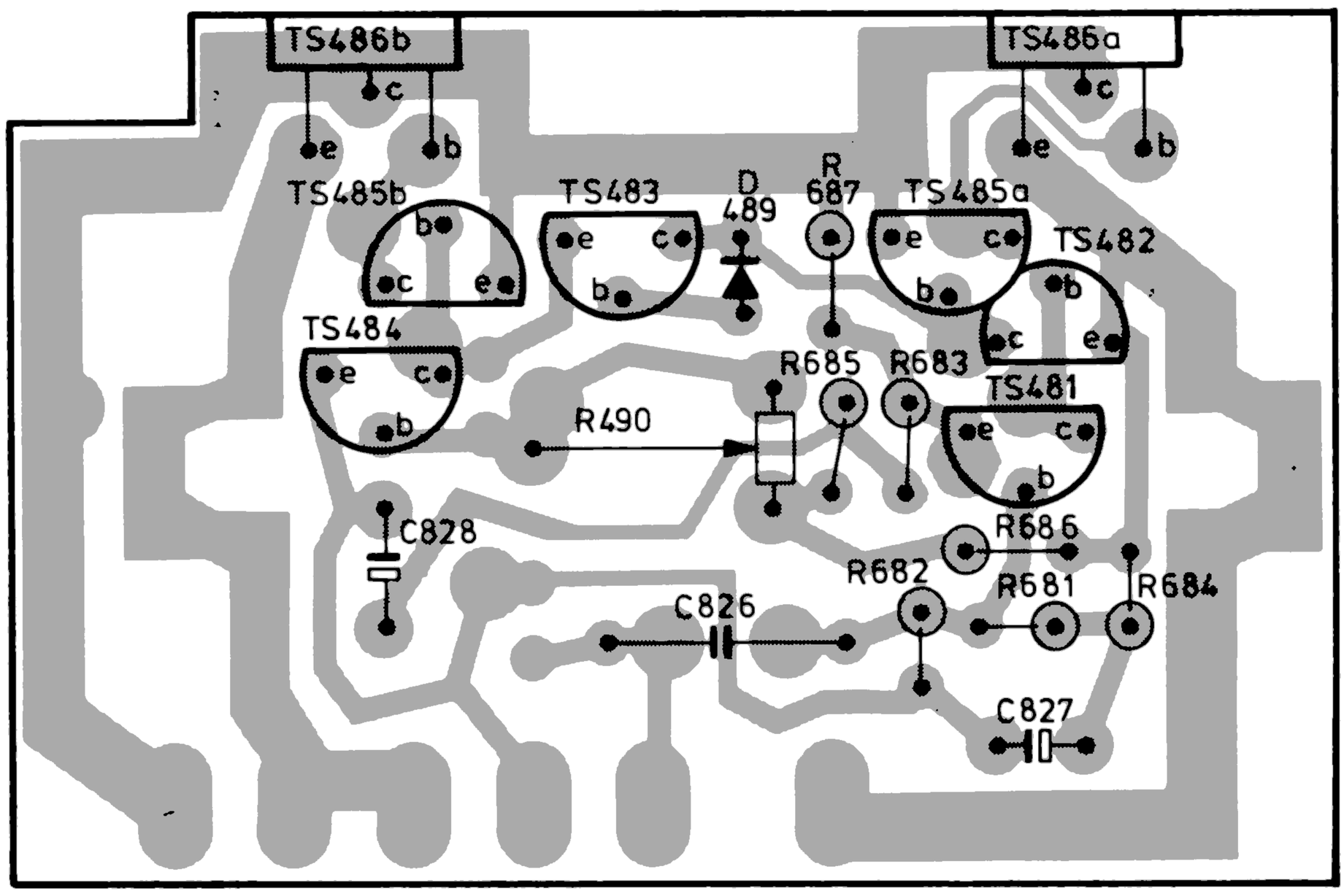

Fig. 6

MISC	TS436,437	SKB	SKC TS426,428	SK-A TS429÷431 TS427
C	775	773	732,730,726,734,736,728,740,741	739,735,729,727,733
C	774,771,770, 772	766÷769	776 738	742÷747 737
R	591, 590, 589,		540,542,532,526,548,544,530,531,549,545,527,533,543,541	
R	580÷588	552, 553,	534÷538 551,550,546,547,	554÷557

Unit E

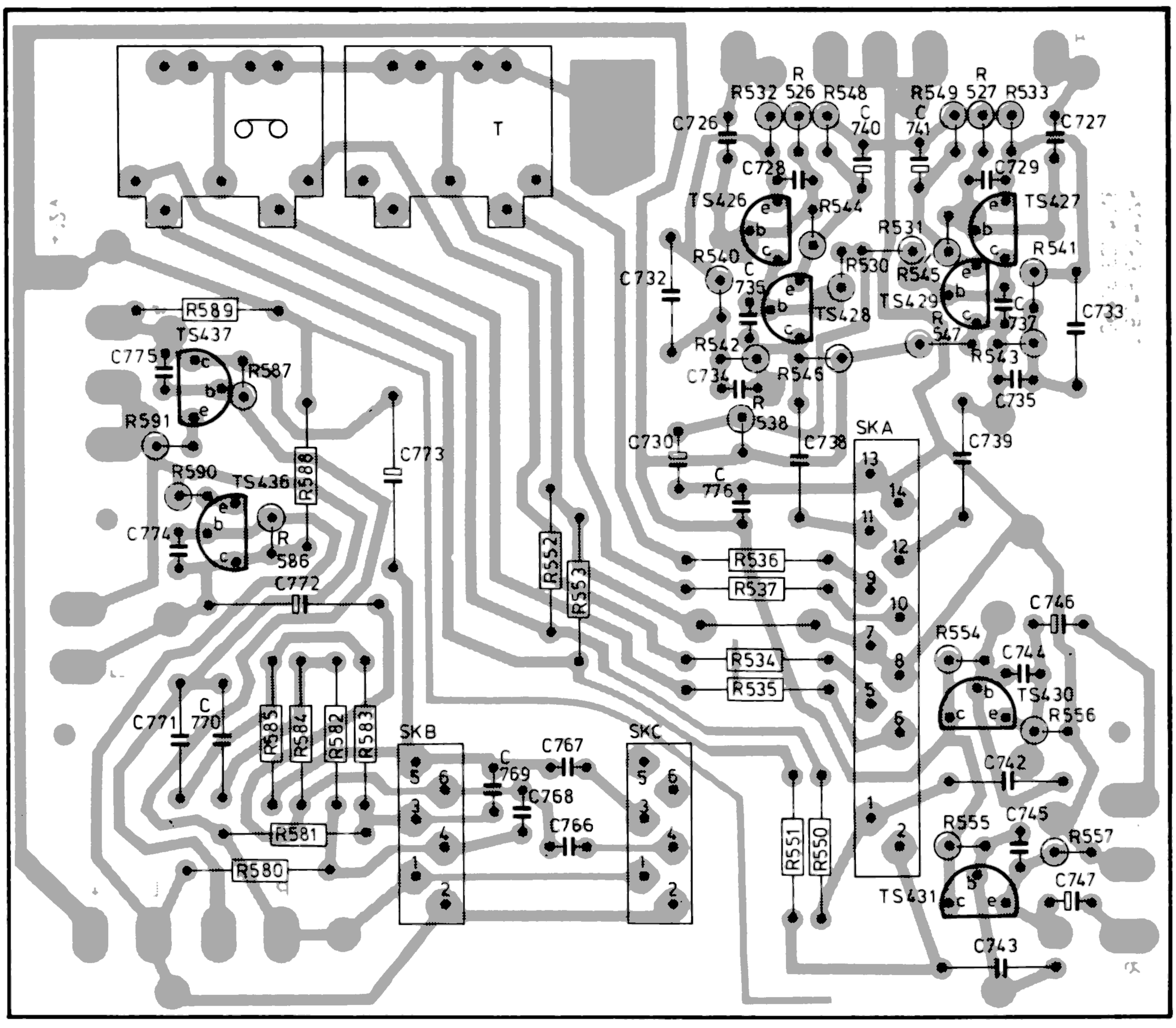

Fig. 7

CS39755