Service
Service
Service

Service Manual

For Record Changer see 22GC051/00R

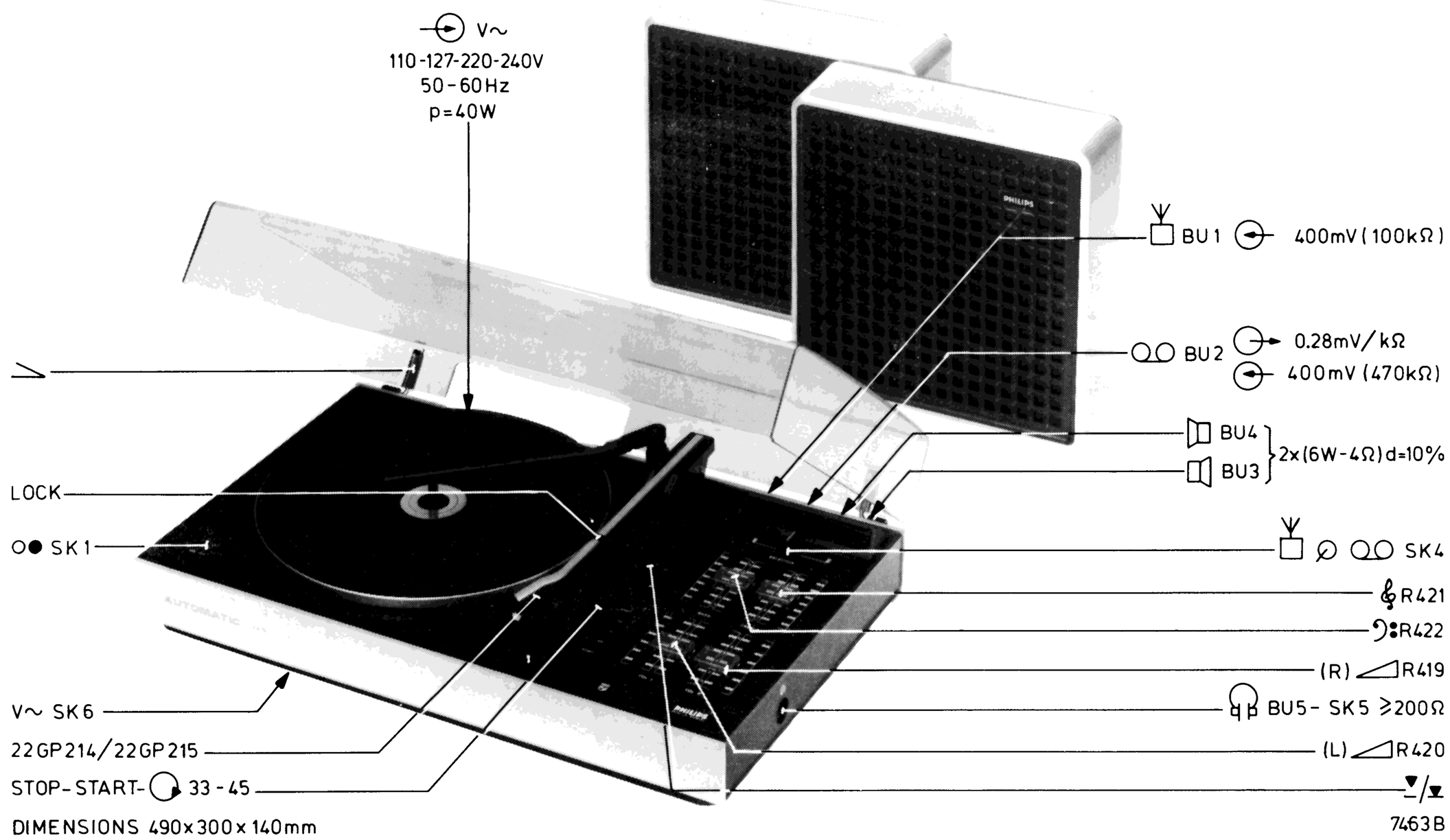

Safety regulations require that the set be restored to its original condition and that parts which are identical with those specified, be used.

Subject to modification
4822 726 11588
Printed in The Netherlands

PHILIPS

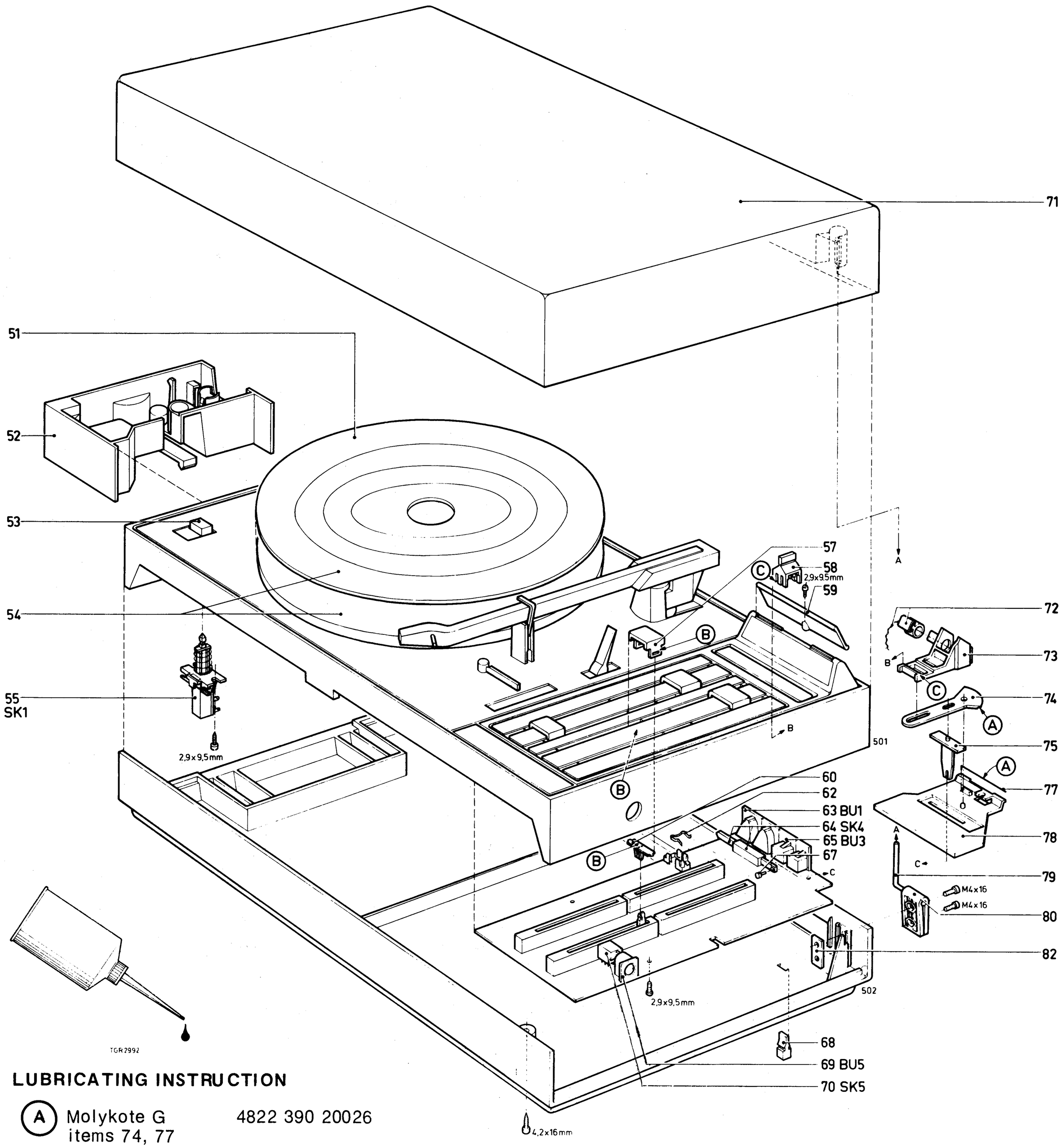

LUBRICATING INSTRUCTION

(A) Molykote G items 74, 77	4822 390 20026	
(B) Alvania R3 items 57, 60, 501	4822 389 10001	Fig. 1
(C) Molykote DX items 58, 73	4822 390 20027	

51	4822 466 50105	63 (BU1)	4822 267 40209	74	4822 402 20064
52	4822 402 60509	64 (SK4)	4822 277 30571	75	4822 402 60512
53	4822 411 20215	65 (BU3)	4822 267 30264	77	4822 492 20024
54	4822 528 10303	67	4822 535 70499	78	4822 520 10368
55 (SK1)	4822 276 10519	68	4822 462 40016	79	4822 417 10543
57	4822 411 60449	69 (BU5)	4822 267 40194	80	4822 417 10545
58	4822 411 90007	70 (SK5)	4822 267 40151	82	4822 417 10544
59	4822 454 20357	71	4822 444 60321		
60	4822 492 62027	72	4822 255 10097		
62	4822 255 40128	73	4822 402 60511		

| | | |

MISC	C	C	R	R
SK1				
BU4				
BU3				
BU2				
BU1				
			506	508
			502	505
			507	501
SK4				
			504	
TS408			503	
	701		509	538
	702		510	539
	704			537
	703			540
TS404		747		535
TS403		748		
TS407			512	
			511	
			536	418
	708			
SK3	705			
	706			
				541
			421	544
			422	542
SK2				543
			516	417
L416	707		515	
	712			
F2			514	
D413	711			
D412	710			
		746		
D411			518	
D410	714			
	713	745		
	709			
			513	
		734		
M				
LA437				
			517	
		733		
		731		
		729		
				525
IC401				
		737		
			419	
			420	
		723		
		719		
	716	725		
	715			
		721		523
		727		521
			528	524
		732		
		738		
SK5		730	519	
BU5				
IC402				526
T435				
	717	722	520	
			527	
	735			
VL1	736	718		
		728		
		726		
		724		
		720		
				522

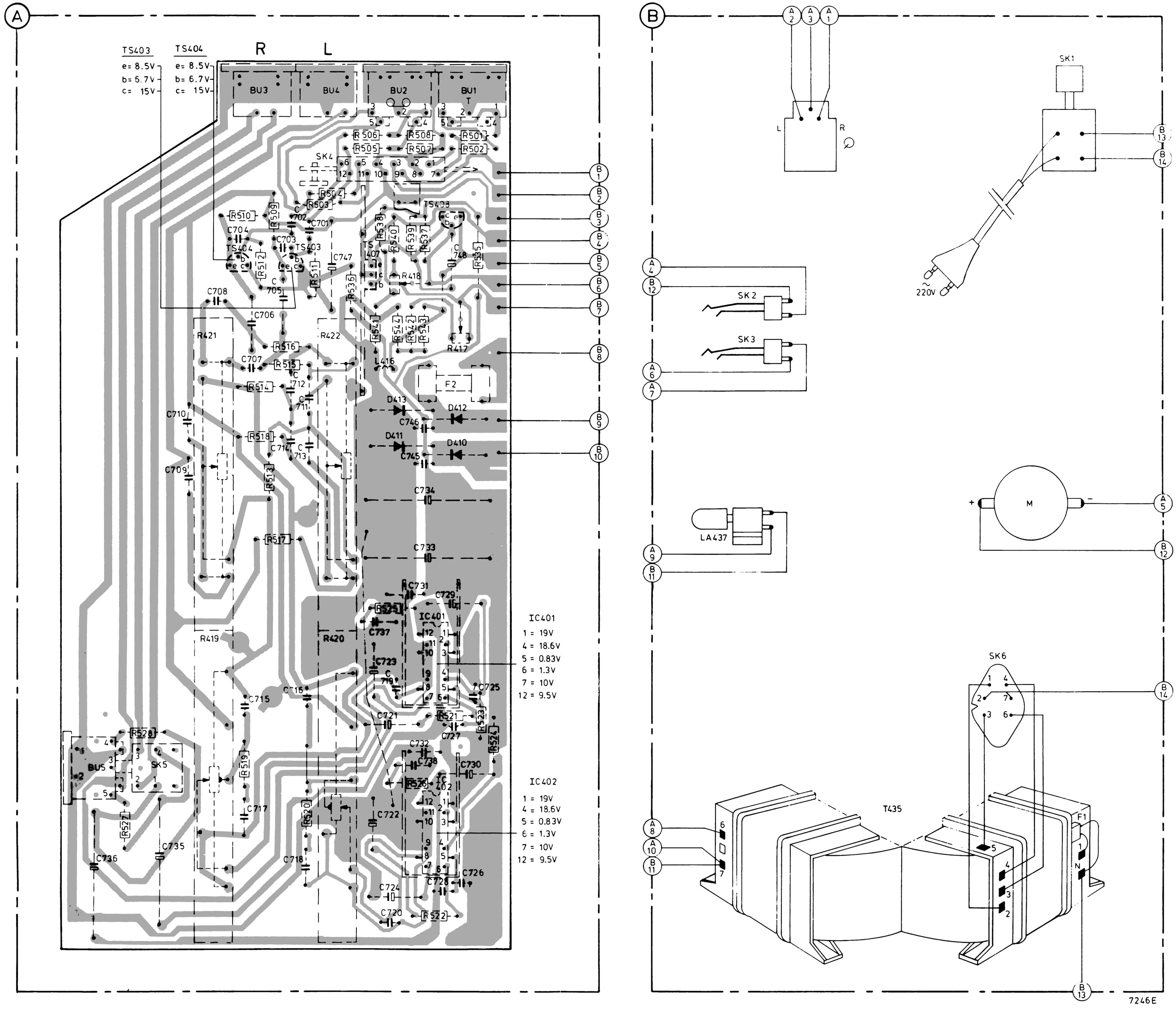

Fig. 3

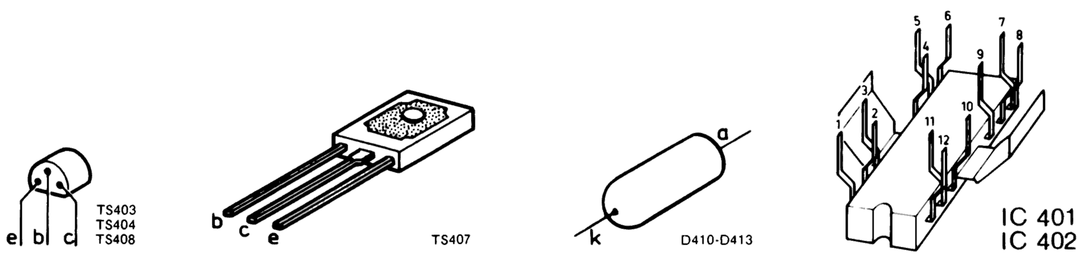

CS53896

MISC	C	C	R	R
BU1				
BU2				
BU4				
BU3				
			501	508
			506	505
			507	502
SK4				
				504
				503
TS408		701	538	509
		702	539	510
		704	537	
		703	540	
TS403	747		535	
TS404	748			512
TS407				511
			418	536
		708		
		705		
		706		
			541	
			542	
			544	421
			543	422
			417	516
L416		707		515
F2		712		514
D413		711		
D412		710		
	746			
D411				518
D410		714		
	745	713		
		709		513
	734			
				517
	733			
	731			
	729			
			525	
IC401				
	737			
			419	
			420	
	723			
	719			
	725	716		
		715		
	721		523	
	727		521	
			524	528
	732			
SK5	738			
BU5	730			519
IC402			526	
	717			520
	722			527
		735		
	718	736		
	726			
	724			
	728			
	720		522	

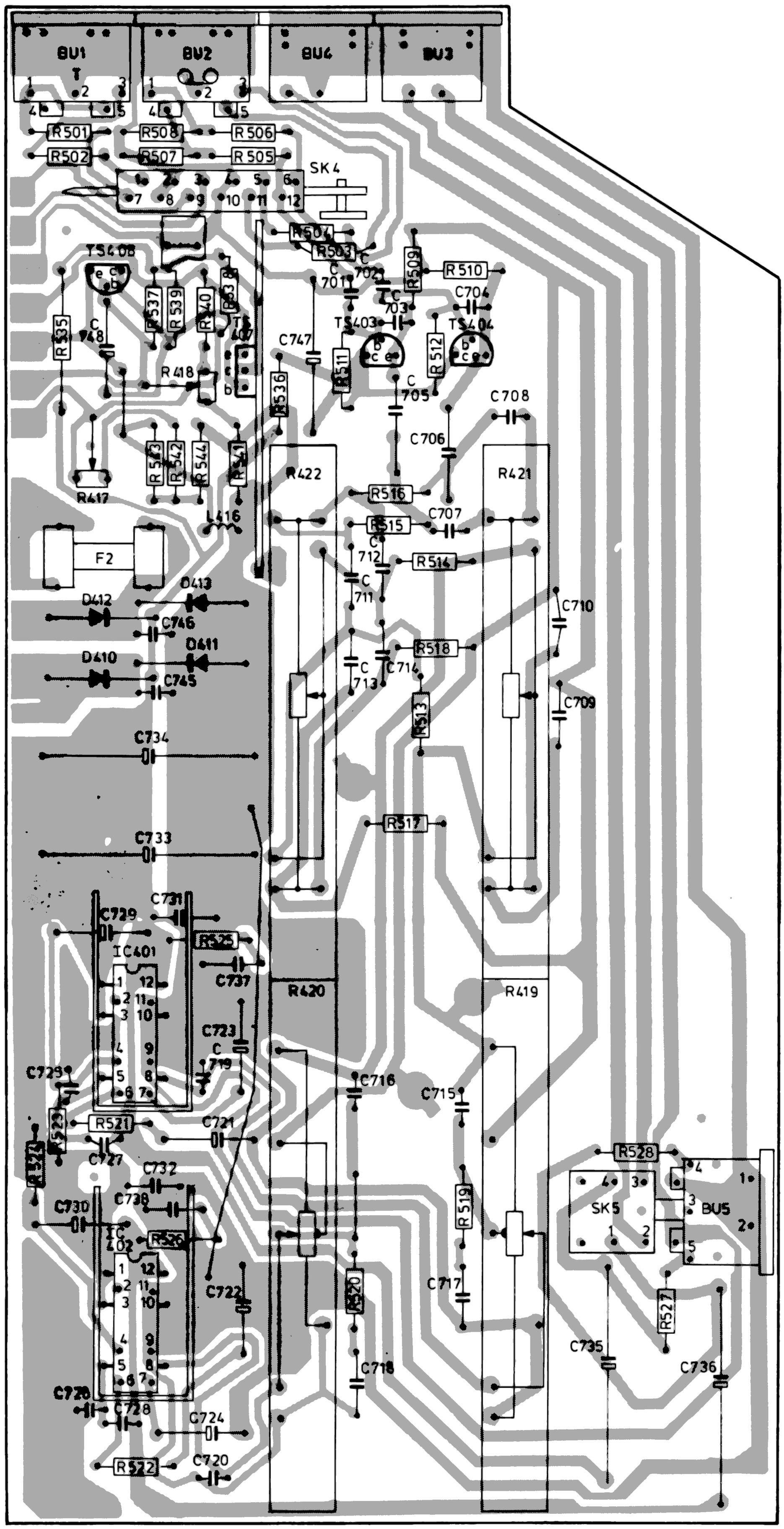

7245D

CS53897

Fig. 4

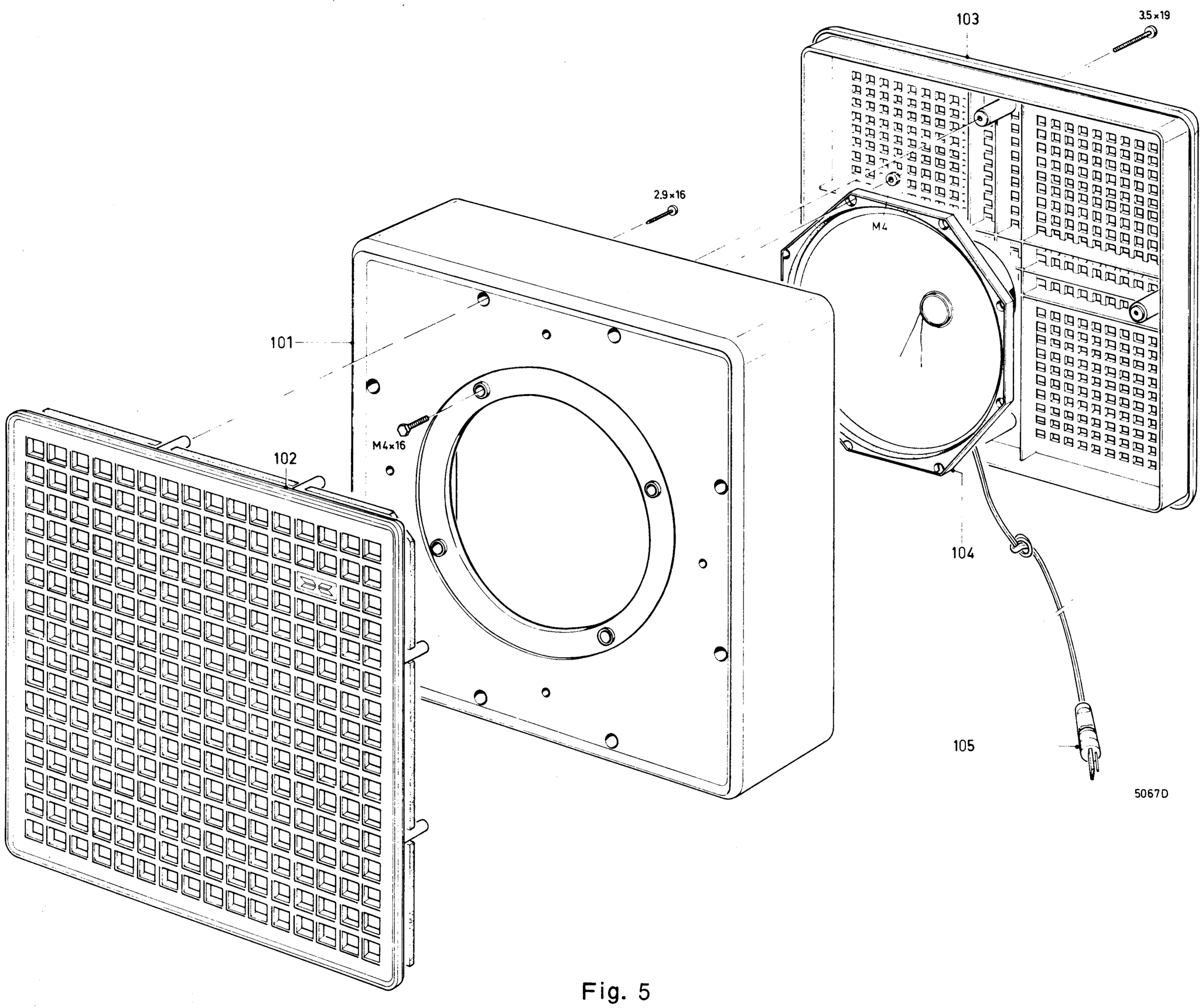

Fig. 5

101	4822 445 20012
102	4822 458 40223
103	4822 445 40008
104 (4 Ω)	4822 240 50072
105	4822 264 30041

-SK-		
SK1 (55)		4822 276 10519
SK4 (64)		4822 277 30571
SK5 (70)		4822 267 40151

-R-		
R417	2K2 (lin)	4822 100 10029
R418	100 Ω (lin)	4822 100 10075
R419,420	100K (spez.)	4822 105 10228
R421,422	100K (spez.)	4822 105 10229
R527,528	750 Ω, 1/8 W ± 5 %	4822 110 60104
R540	1K1, 0.4 W ± 2 %	5322 116 54554
R541	620 Ω, 0.4 W ± 2 %	5322 116 54529
R543	24 Ω, 1/8 W ± 5 %	4822 110 60064

-R-		
R523,524	56 Ω, 1/8 W ± 5 %	4822 111 30412

-L- -S-		
L416		4822 157 50789
S430,431	4 Ω	4822 240 50072

-D-		
D410-D413	BY127	5322 130 30259

-TS- -IC-		
TS403,404	BC549C	5322 130 44246
TS407	BD135	5322 130 40645
TS408	BC548B	4822 130 40937
IC401,402	TBA810S	4822 209 80297

-Miscellaneous-		
M		4822 361 20112
F1		4822 252 20007
F2	250 V, 2.5 A	4822 253 20024
T435		4822 145 30154
LA437	6 V, 0.1 A	4822 134 40326
BU1,2 (63)		4822 267 40209
BU3,4 (65)		4822 267 30264
BU (69)		4822 267 40194