Service
Service
Service

Service Manual

For record changer see 22GC061/83/87

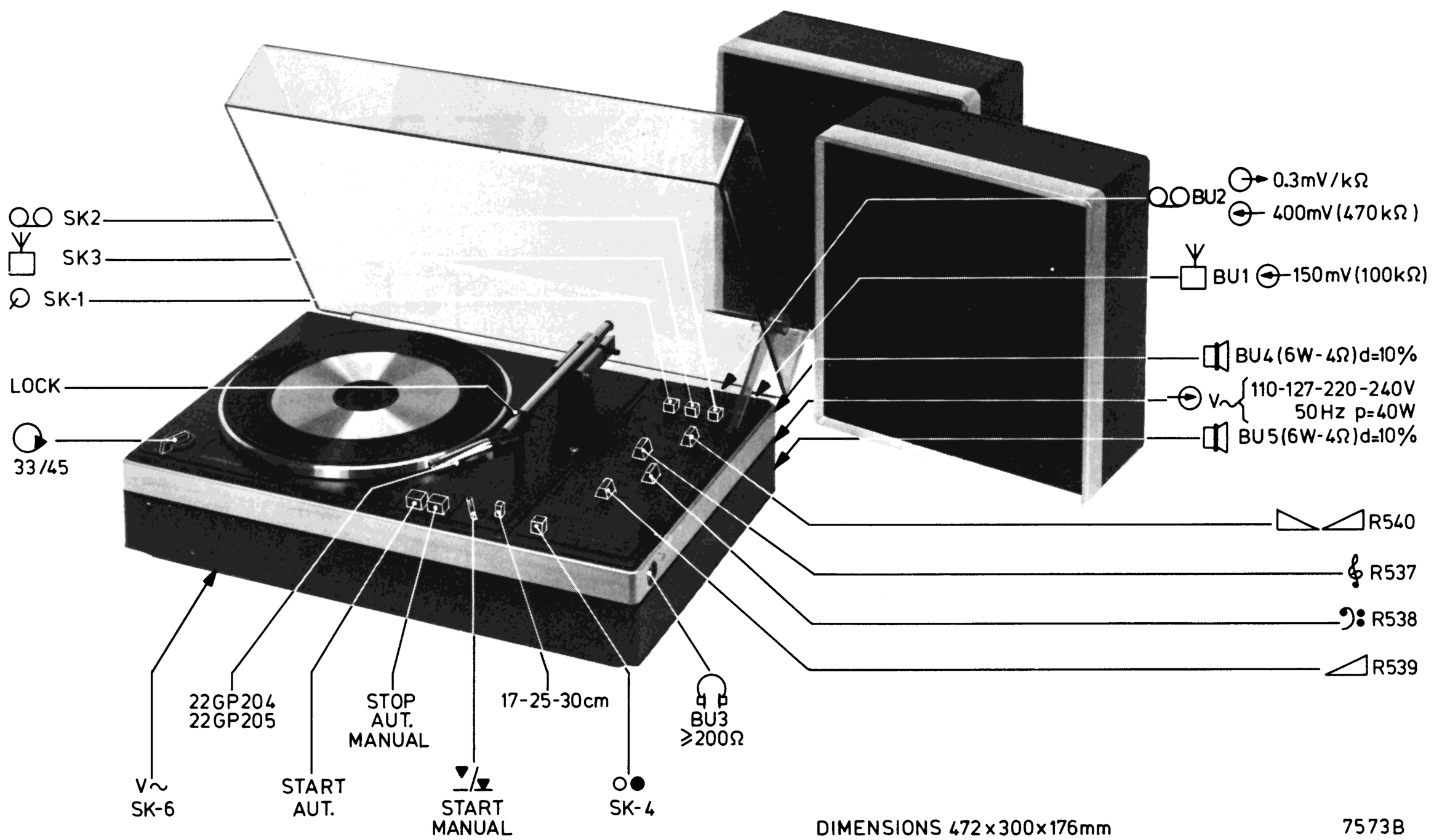

Safety regulations require that the set be restored to its original condition and that parts which are identical with those specified, be used.

Documentation Technique Service Dokumentation Documentazione di Servizio Huolte-Ohje Manual de Servicio Manual de Serviço

Subject to modification
4822 726 11599
Printed in The Netherlands

PHILIPS

R	540 510 514 530 534 532 503 537 504 511 515 544 520 526 538 507 502 522–524 505 539 506 536 581–584	R
R	513 509 528 527 529 531 551 552 508 512 516 543 533 521 517 519 501 525 535 548 547	R
C	630 638 614 613 626 607 618 624 602 632 631 639 633 640 634 622 604 628 605 606	C
C	612 620 629 619 625 608 637 611 617 601 623 627 603 621 610 609	C
MISC.	LA 447 TS410 409 BU1,3 TS416a D423 424 BU2 TS401–404 413÷415a TS416b 405–408 412 411 415b SK6 BU5,4 D419–421 Z2 T403 SK5 C600 P.U. SK4,7 SK1,2,3 M	MISC.

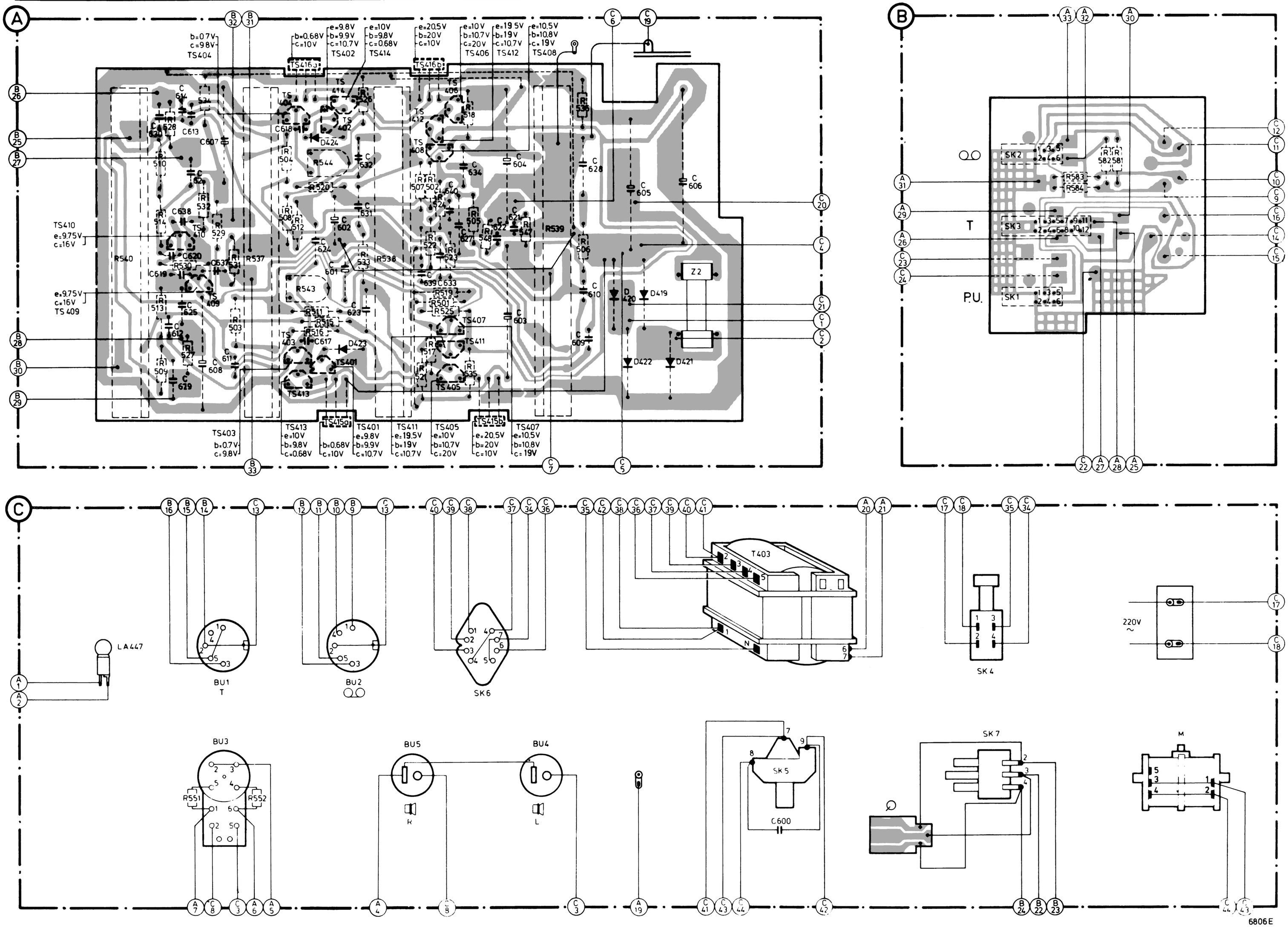

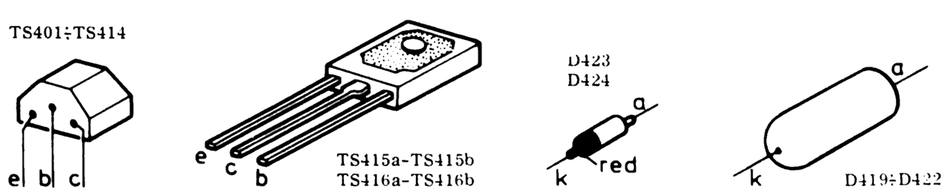

Fig. 2

CS53741

MISC	SK7	SK1,2,3	TS410,409	D419÷422	LA447 Z2 T473	TS408,407 SK6 Z1 SK4	TS412,402,404,411,401,403 D424,423 TS406,414,405,413,416a,416b,415a,415b	BU3 LS1,2	MISC
C	638 637 620 619 607 608 626 625 630 629 606 605 612 614 611 613				624 632 623 631 610 628 609 627 634 633 640 639 600	602 601	618 617	604 603 622 621	C
R	532 582 584 530 534 510 514 528 540b 537b 504				512 516 538b 508 506 539b	522 524 518 502 518 520	526 544	548 552	R
	531 581 583 529 535 536 509 513 527 540a 537a 503				511 (533) 515 538a 507 505 539a	521 523 517 501 517 519	525 543	547 551	

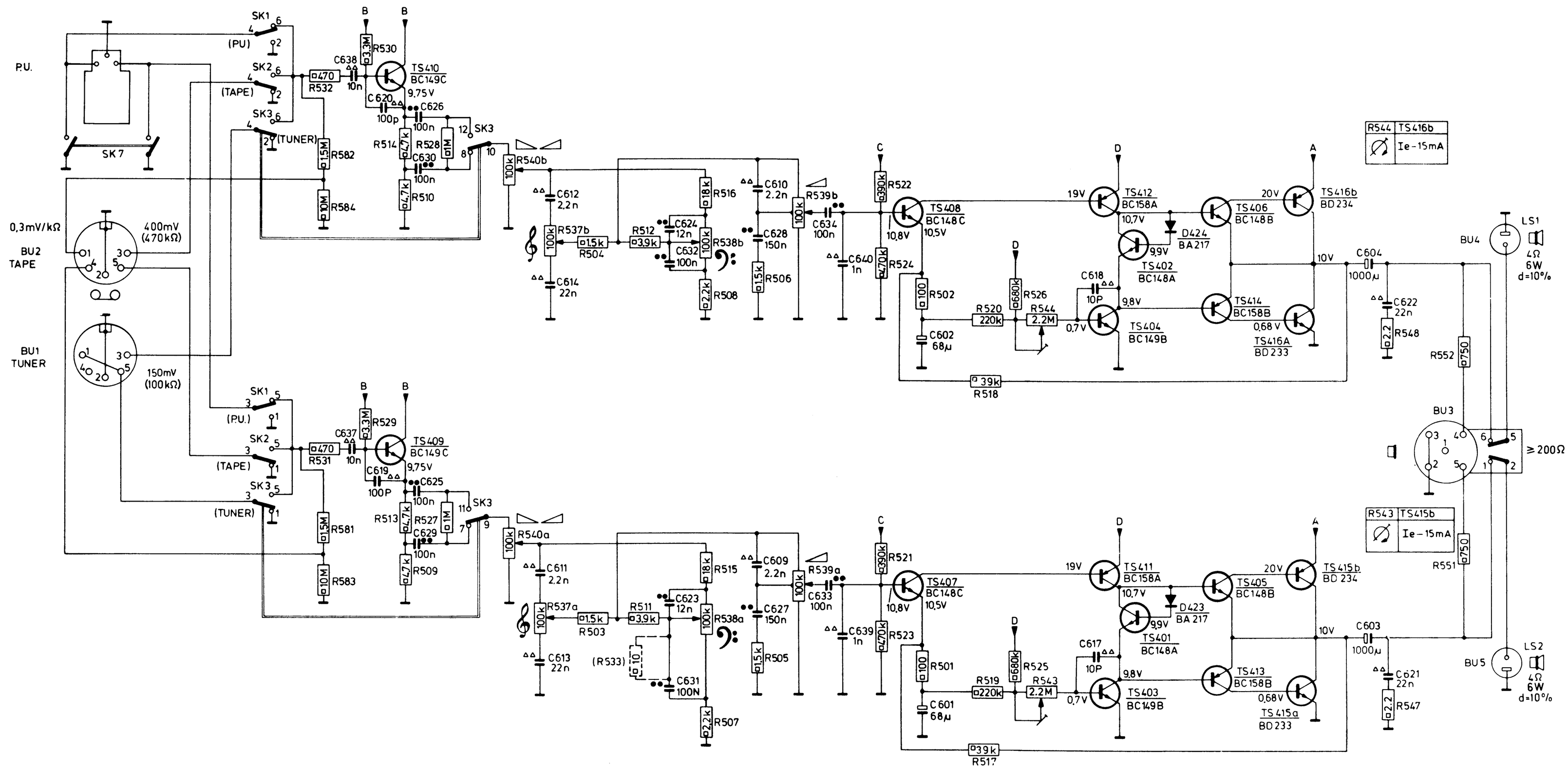

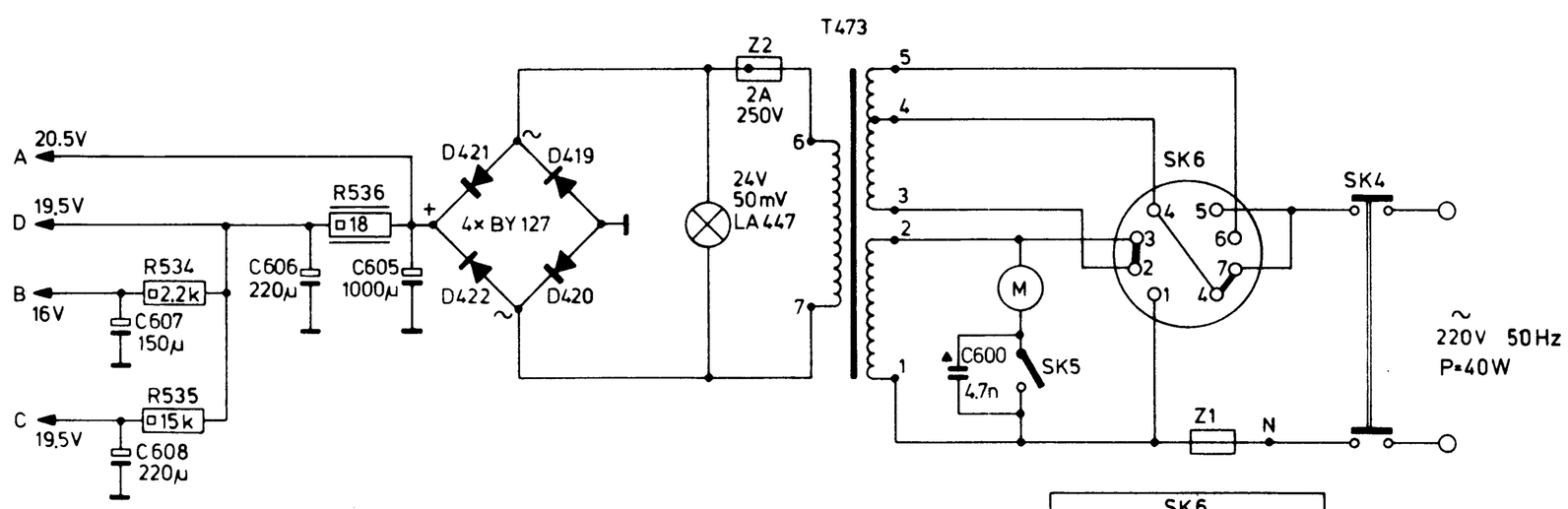

SK6			
110 V	7-4	1-2	3-4
220V	7-4	2-3	
127 V	7-6	1-2	3-4
240V.	6-5	2-3	

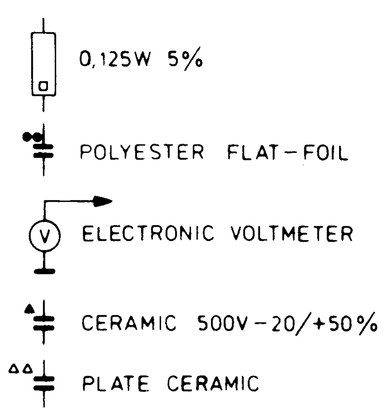

6805 D

CS53742

Fig. 3

| | | |