POWER SUPPLY FROM MATCHING AMPLIFIER

Service
Service
Service

Service Manual

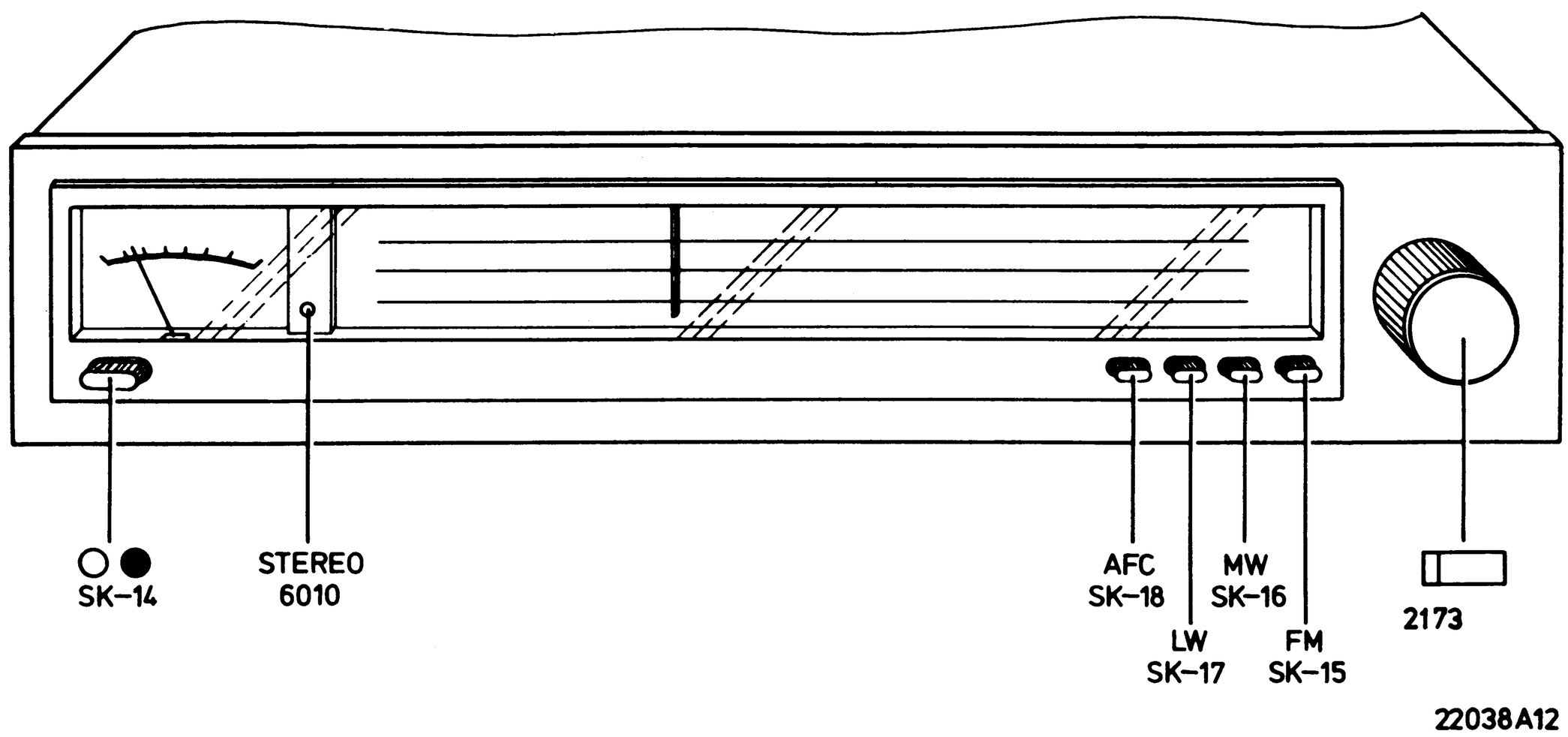

GB

For more detailed technical specifications please consult commercial documentation.

F

Pour l'obtention de données techniques plus détaillées veuillez consultez la documentation commerciale.

I

In modo da ottenere dati tecnici piu particolareggiati, vi preghiamo di riferirvi alla documentazione commerciale.

NL

Voor meer uitgebreide technische specificaties gelieve de commerciele dokumentatie te raadplegen.

D

Für eine mehr detaillierte technische Spezifikation verweisen wir auf die kommerzielle Dokumentation.

S

För mera detaljerade tekniska data se kommersiel dokumentation.

PHILIPS

GB	NL	F	
Power supply voltage	Voedingsspanning	Tension d'alimentation	: 18 V ⎓ (7 + 4 –)
Dimensions	afmetingen	Dimension	: 79x418x298 mm
Wave range	Golfbereik	Gammes d'onde	
FM	FM	FM	: 87,5 MHz - 108 MHz
LW	LG	G.O.	: 150 kHz - 255 kHz
MW	MG	D.O.	: 520 kHz - 1605 kHz
Input impedance	ingangsimpedantie	Impédance d'entrée	
FM	FM	FM	: 75 Ω/300 Ω
AM	AM	AM	: 300 Ω
I.F.	middenfrequentie	Fréquence intermédiaire	
FM	FM	FM	: 10,7 MHz
AM –/00	AM –/00	AM –/00	: 468 kHz
–/15	–/15	–/15	: 452 kHz

D	I	S	
Versorgungsspannung	Tensione alimentazione	Matningsspänning	: 18 V ⎓ (7 + 4 –)
Abmessungen	dimensioni	dimensioner	: 79x418x298 mm
Bereiche	gamme d'onda	våglängdsområde	
UKW	FM	FM	: 87,5 MHz - 108 MHz
LW	OL	LV	: 150 kHz - 255 kHz
MW	OM	MV	: 520 kHz - 1605 kHz
Eingangsimpedanz	impedanza d'entrata	ingångsimpedans	
FM	FM	FM	: 75 Ω/300 Ω
AM	AM	AM	: 300 Ω
Z.F.	frequenza intermedia	I.F.	
FM	FM	FM	: 10,7 MHz
AM –/00	AM –/00	AM –/00	: 468 kHz
–/15	–/15	–/15	: 452 kHz

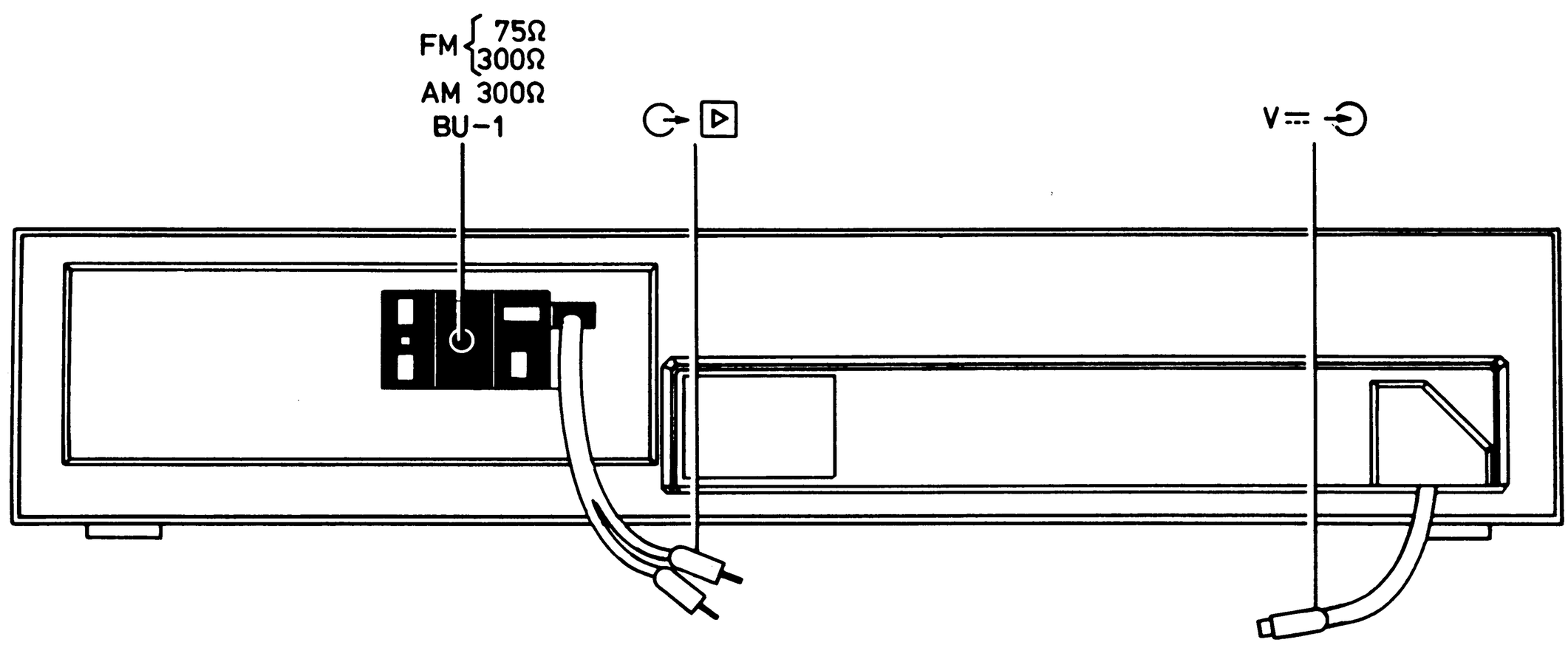

22037A12

MISC	6104.BU-1	6101	6107	6112.6102.6103	6108.6111	6109	6110	6120	6119	6125	6126.6127	1006 ÷ 1008	6116	1350.1351	1706	6130.6129	1010	6117.6118	MISC
S	5101	5102	5116.5117	5104.5105.5118.5119	5107.5106	5120	5123	5108	5111	5112	5113	5125							S
C	2101	2186.2182.2103	2173c.d.e.f.g.h.2120.2105 – 2108.2110 – 2117	2178	2118.2119	2124.2123	2125.2129	2142.2127	2126	2141.2130	2199.2131.2132	2136.2137.2133.2134.2138.2139.2140.2156		2153 – 2155.2158.2147.2148		2157.2149.2150.2145	2152	2163.2164.2158.2159	C
C			2173a b	2122.2174.2121.2179 – 2181	2187.2184.2183	2104	2185	2143.2197			2181.2182.2198.2170.2196						2189 ÷ 2192	2193.2194	C
R		3101	3102.3103.3108	3105.3106.3110	3113.3109	3114	3104	3120.3119.3121.3118.3122	3123 ÷ 3128	3129	3133	3142.3134.3143.3139.3140				3154	3151	3158.3163.3161	R
R		3182		3184 – 3186.3116.3115	3183		3145	3131.3130	3187	3144	3219 – 3221	3218.3132.3136.3216.3135.3217.3137		3146 – 3148	3156	3155.3157.3153.3152		3159.3162.3160	R
R				3181					3208		3209 – 3211.3224						3198.3199	3200 ÷ 3203	R

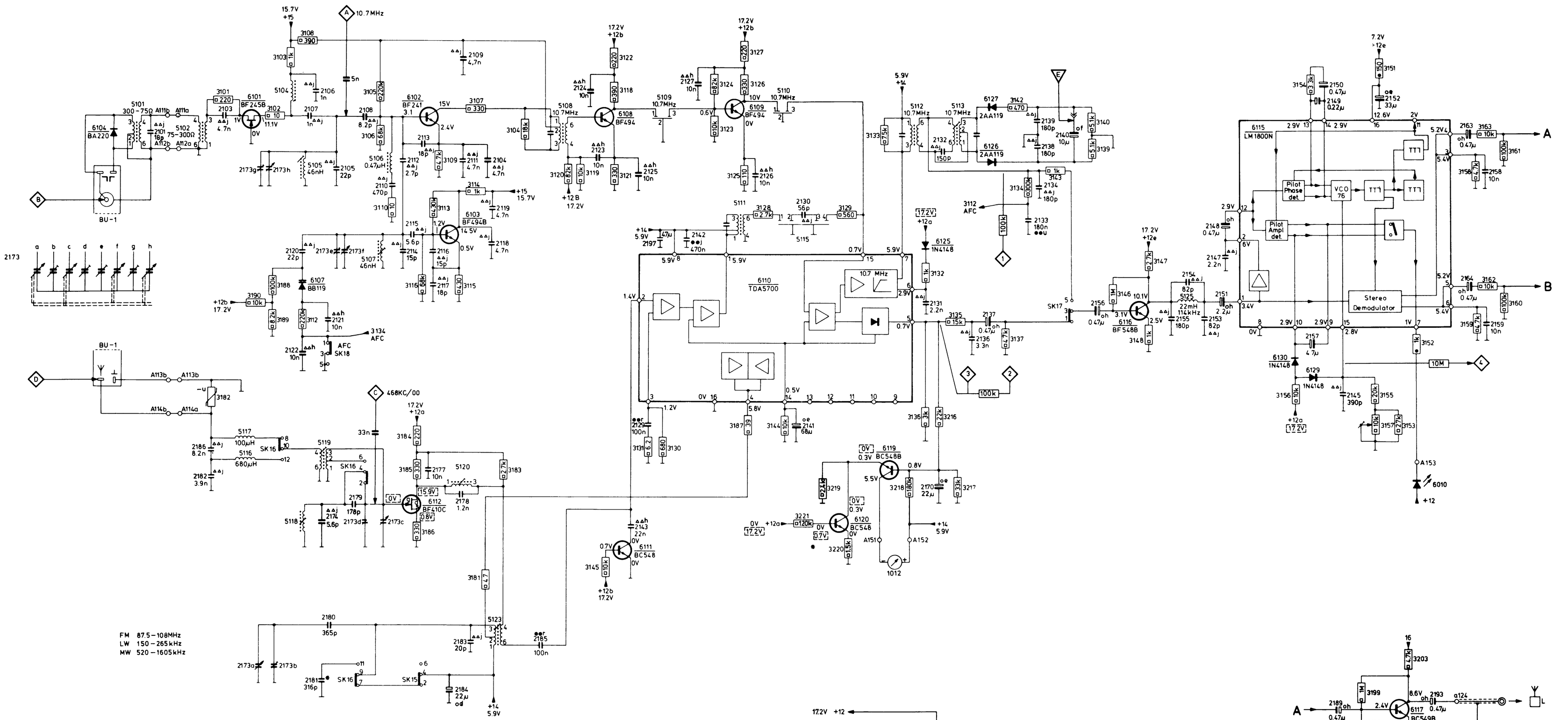

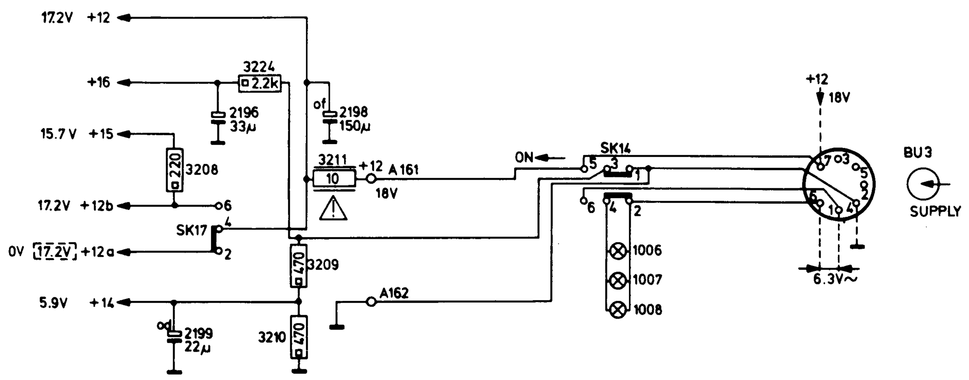

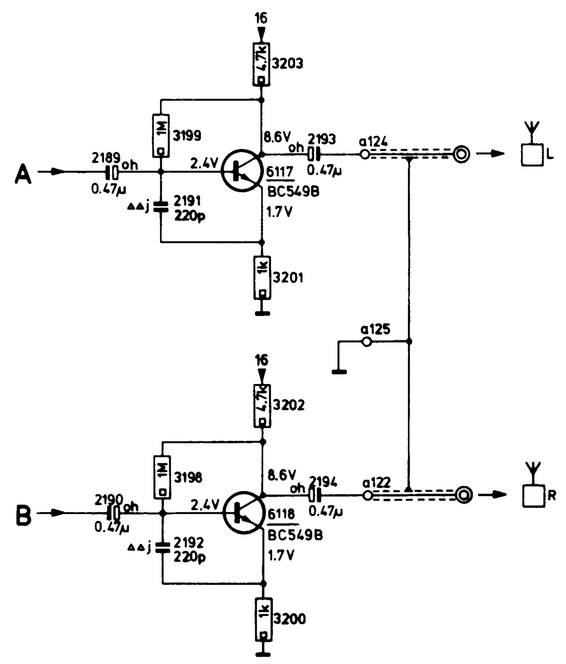

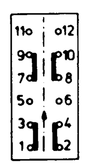

SK 15	FM	1x
SK 16	MW	1x
SK 17	LW	1x
SK 18	AFC.	1x

● / 15 = 2181 = 324p
3220 = 620E

≥40kΩ / V
10V LW MW
10V FM

SAFETY CARBON RESISTOR
CARBON RESISTOR E24-SERIES 0.33W CR25 5%
CARBON RESISTOR E24-SERIES 0.5W < 1MΩ 5% / > 1MΩ 10%
PLATE CERAMIC CAPACITOR
FLAT-FOIL POLYESTER CAPACITOR
MINIATURE ELECTROLYTIC CAPACITOR

● b = 4V c = 6.3V d = 10V e = 16V f = 25V
g = 40V h = 63V j = 100V m = 150V q = 200V
r = 250V s = 350V u = 400V

21348E12

CS 73 569

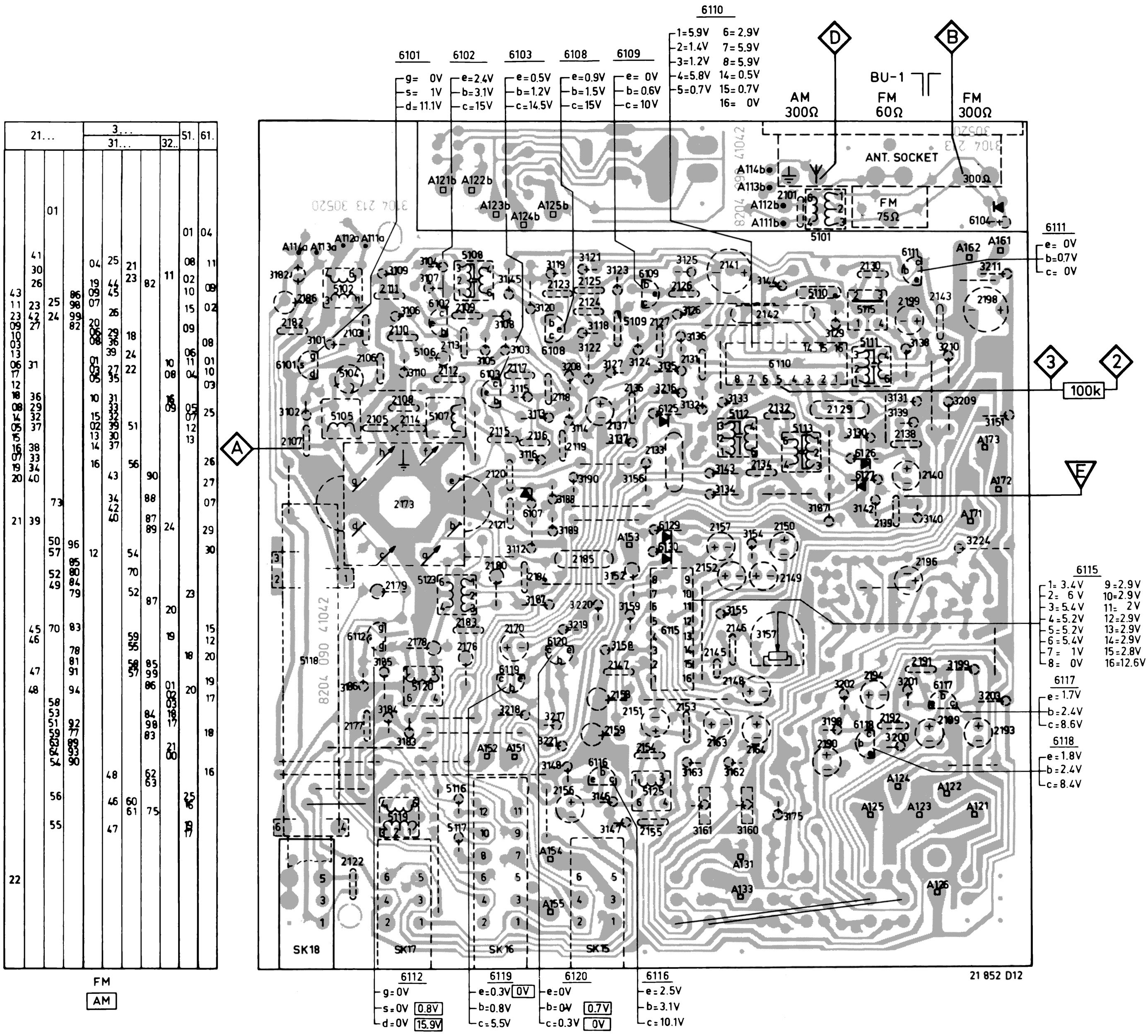
6110
1=5.9V 6=2.9V
2=1.4V 7=5.9V
3=1.2V 8=5.9V
4=5.8V 14=0.5V
5=0.7V 15=0.7V
16= 0V
6101
g= 0V
s= 1V
d=11.1V
6102
e=2.4V
b=3.1V
c=15V
6103
e=0.5V
b=1.2V
c=14.5V
6108
e=0.9V
b=1.5V
c=15V
6109
e= 0V
b=0.6V
c=10V
AM
300Ω
BU-1
FM
60Ω
FM
300Ω
ANT. SOCKET
300Ω
FM
75Ω
6111
e= 0V
b=0.7V
c= 0V
100k
6115
1= 3.4V 9=2.9V
2= 6 V 10=2.9V
3=5.4V 11= 2V
4=5.2V 12=2.9V
5=5.2V 13=2.9V
6=5.4V 14=2.9V
7= 1V 15=2.8V
8= 0V 16=12.6V
6117
e=1.7V
b=2.4V
c=8.6V
6118
e=1.8V
b=2.4V
c=8.4V
6112
g=0V
s=0V 0.8V
d=0V 15.9V
6119
e=0.3V 0V
b=0.8V
c=5.5V
6120
e=0V
b=0V 0.7V
c=0.3V 0V
6116
e=2.5V
b=3.1V
c=10.1V
SK18
SK17
SK16
SK15
21 852 D12
FM
AM

FM SK-17						
FM-IF	10,7 Mc + 300 kc via 5 nF	A	2173 min.cap.	C2133 14 IC6110 16 E	5112	1 max.+ sym.
					5108	
					5113	E
					5113	1 0 ± 20 mV
FM-RF	86,7 Mc	D	2173 max.cap.		5107	2 max.
	108,4 Mc		2173 min.cap.		2173 f	
	86,7 Mc		2173 max.cap.		5105	2 max.
	108,4 Mc		2173 min.cap.		2173g	
RF sensitivity /95	98 MHz + 37,5 kHz	D			3160 3161	R A (Rec) 200– L B (Rec) 225 mV

STEREO DECODER		
VCO	3157	76kc 4

AM SK-15,16						
MW	via 33 nF 452kc/ 468kc + 1kc	C	2173 min.cap.	5120		3 max ~ (= f_o 5115)
	f_o 5115 + 1kc				5111	3 max ~
					5120	3 min ~
LW	147kc + 1kc		2173 max.cap.		5123	3 max.
MW	1635kc + 1kc	C	2173 min.cap.		2173b	
MW	600kc + 1kc	D			5118	
	1500kc + 1kc				2173d	3 max.
LW	155kc + 1kc				5119	3 max.

Repeat - Herhalen - Répéter - Wiederholen - Ricomminciare - Repetera - Gentage - Gjentagelse - Toista

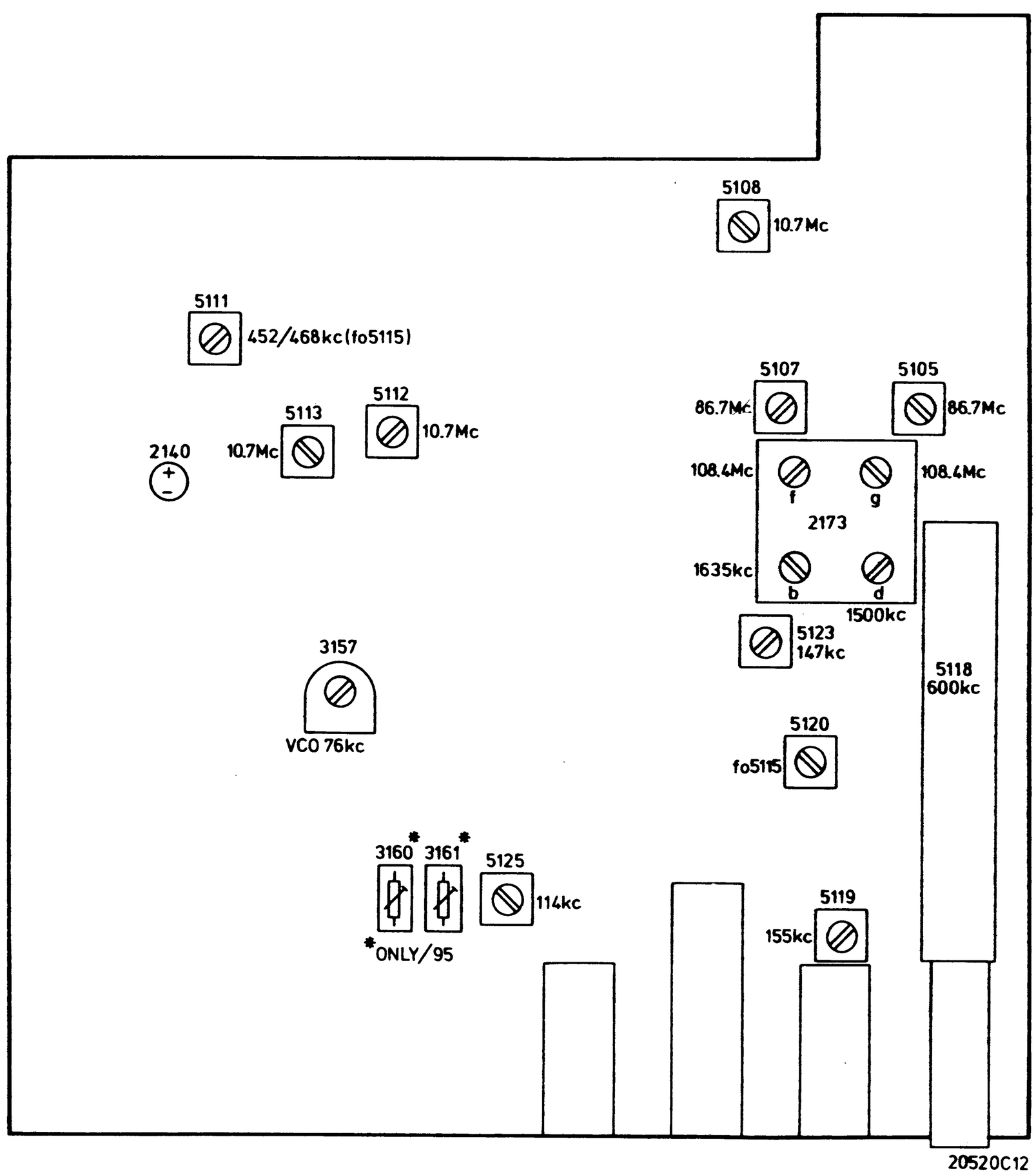
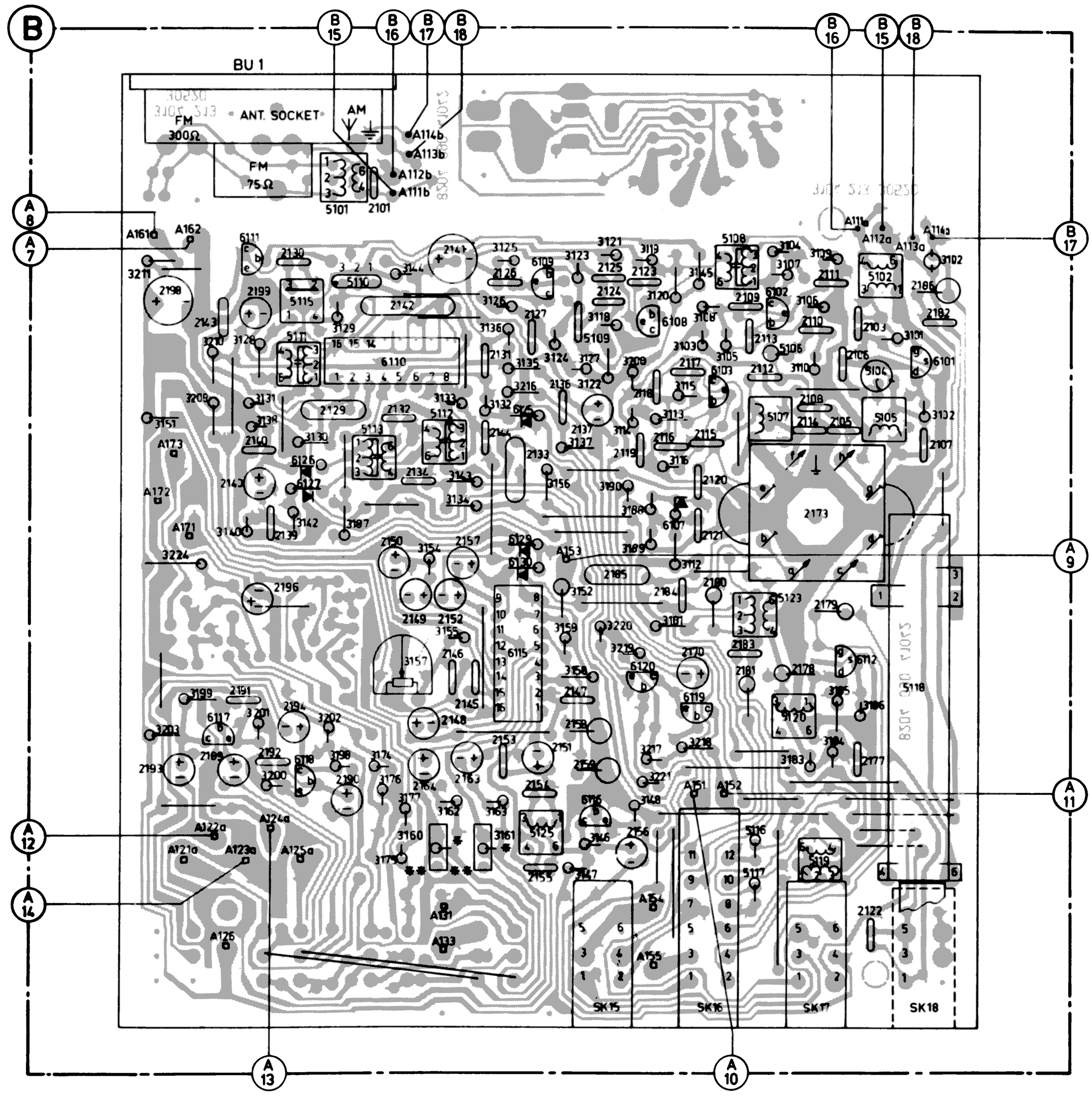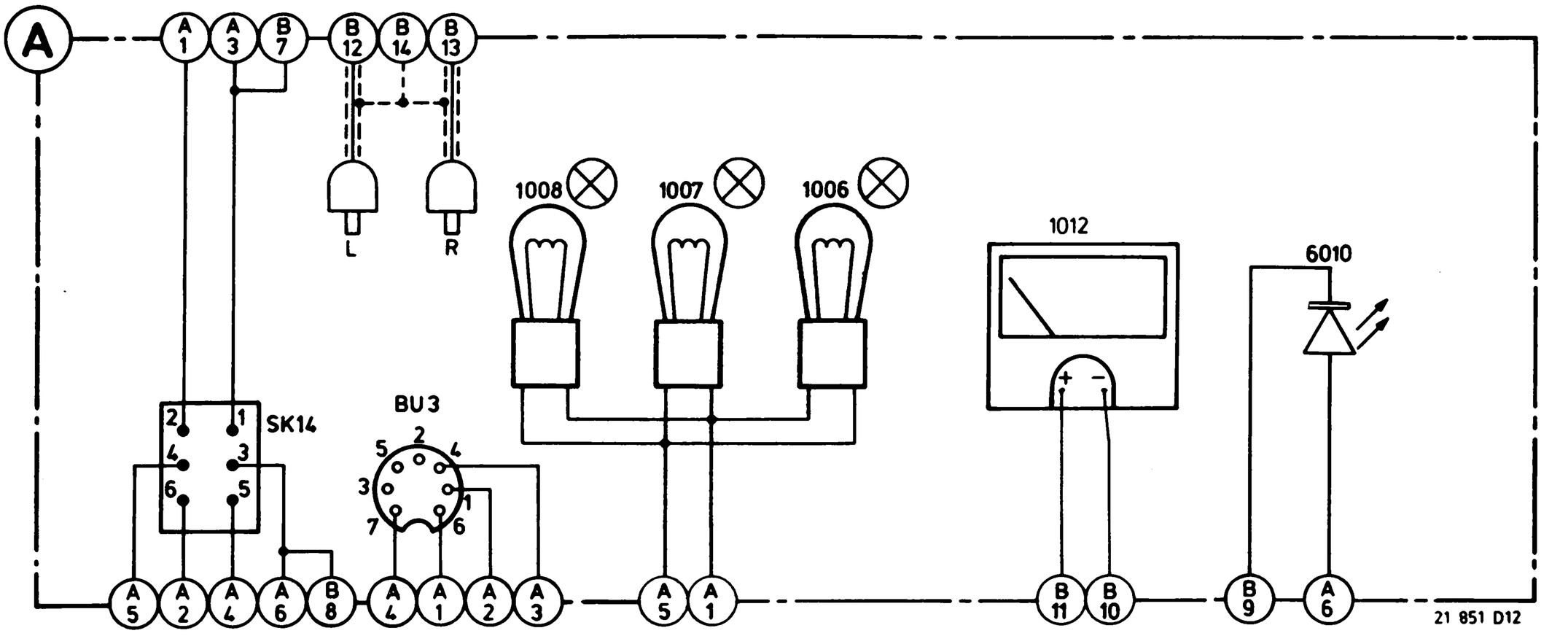
MISC.	6111.5111.5115.6126.6127.5101.5110.5112.1007 6125.5125.5109.1006 6108.6107 6103.5108 5107.6102.5116 5104.5102.5105 6101
MISC.	6117 6118 1008 5113.6110 6129.6130.6115 6116 6120.1012.6119.5117.5123 5106.5120 6112.5119 5118 6010
C	2198.2196.2143 2199.2140.2139.2130.2101.2129.2142.2132.2134.2131.2144.2126.2127.2137.2123÷2125.2115÷2121 2108÷2114 2173.2105.2106.2103.2182
C	2193 2189 2191.2192.2194.2190.2141.2145÷2150.2157.2151÷2155.2133.2136.2164.2163.2147.2158.2159.2185.2156.2184.2180÷2183.2170.2107.2177÷2179.2122
R	3211 3210 3128 3131.3130 3129 3144 3133 3132.3125.3126.3216.3123.3121.3127.3118÷3120.3190.3188 3101 3102
R	3224.3151 3209 3138 3142 3143 3134.3136.3155.3156.3124.3137.3123.3208.3113÷3116.3103÷3110 3182
R	3202 3199 3201 3202.3187.3176 3154.3177.3155 3152.3159.3158.3220.3219.3189.3112 3183÷3186
R	3140 3200 3198.3174.3157 3175 3160÷3163 3147.3146.3148.3221.3217.3181.3218.3145