# Hi-Fi TAP + Remote control 22AH888/00/22/29

Service
Service
Service

13329B10

# Service Manual

INHOUDSOPGAVE


| | blz. |
|---|---|
| Specificaties | 2 |
| Knoppenfuncties (Radio + Zender) | 3-4 |
| Blokschema HF+LF | 5-6 |
| Blokschema logisch gedeelte + zender | 7-8 |
| Stereodecoder afregeling | 9 |
| Principeschema HF + voeding | 10-11-12 |
| Printen HF + voeding | 13-14 |
| HF-afregeling | 15 |
| Principeschema logisch gedeelte | 16-17-18 |
| Printen logisch gedeelte | 19-20-21 |
| Zender | 22-23-24 |
| AM-afregeling | 25-26 |
| Ontvanger | 27 |
| Principeschema LF | 28 |
| Printen LF | 29-30 |
| Bedrading | 31 ... 34 |
| Mechanische stuklijst | 35 |
| Exploded view | 35-36 |
| Elektrische stuklijst | 37-38 |
| Foutzoekmethode | 39 ... 46 |


Veiligheidsbepalingen vereisen, dat het apparaat bij reparatie in zijn oorspronkelijke toestand wordt teruggebracht en dat onderdelen, identiek aan de gespecificeerde, worden toegepast.

CS 60 137


DocumentationTechnique Service Dokumentation Documentazione di Servizio Huolte-Ohje Manual de Servicio Manual de Serviçio

PHILIPS

Subject to modification

NL

4822 725 12451

Printed in The Netherlands

PHILIPS


www.vinylengine.com

## SPECIFICATIES

**Versterkergedeelte**

| | |
|---|---|
| Uitgangsvermogen (4 Ω) | : 2 x 35 W |
| Harmonische vervorming 40 - 20.000 Hz 2 x 35 W | : D ⩽ 0,4 % |
| Intermodulatie vervorming (250 - 8.000 Hz 4 : 1) | : D ⩽ 0,4 % |
| Vermogensbandbreedte | : 20 - 50.000 Hz |
| Frequentiebereik | : 30 - 25.000 Hz ± 1.5 dB |
| Kanaalscheiding | : 40 dB - 1000 Hz<br>30 dB - 250 - 10.000 Hz |
| Lage toonregeling | : > 11 dB, < −14 dB bij 50 Hz |
| Hoge toonregeling | : > 10 dB, < −11 dB bij 10.000 Hz |
| Contourregeling (bij −40 dB) | : > 8,5 dB bij 100 Hz<br>< 4 dB bij 10.000 Hz |
| Ingangen | |
| Tape 5-3 | : 160 mV/50 kΩ |
| Tape 1-4 | : 2 mV/kΩ |
| Hoofdtelefoonplug (Jack) | : 8 - 2000 Ω |

**Tunergedeelte**

| | | |
|---|---|---|
| FM-tuner | | |
| Frequentiegebied | : 87,5 - 104 MHz | |
| Gevoeligheid | | |
| mono 26 dB S/N | : 2.0 μV | |
| stereo 46 dB S/N | : 71 μV | |
| Selectiviteit (300 kHz) | : 55 dB | |
| Frequentiebereik | : 11 - 12.500 Hz ± 3 dB | |
| Piloottoon-onderdrukking | : 30 dB - 19 kHz<br>50 dB - 38 kHz | |
| S/N verhouding | : 55 dB | |
| Kanaalscheiding 250 - 12.500 Hz | : 15 dB | |
| AM-onderdrukking | : 45 dB | |
| MF-onderdrukking | : 80 dB | |
| Image response | : 65 dB | |
| AM tuner | | |
| Golfgebied | : M.G.<br>520-1605 kHz<br>L.G.<br>150-345 kHz | |
| Gevoeligheid | | |
| | : M.G. | L.G. |
| ext. antenne | 200 μV | 350 μV |
| ferroceptor | 800 μV/m | 1300 μV/m |
| Gevoeligheid | : 30 dB | |

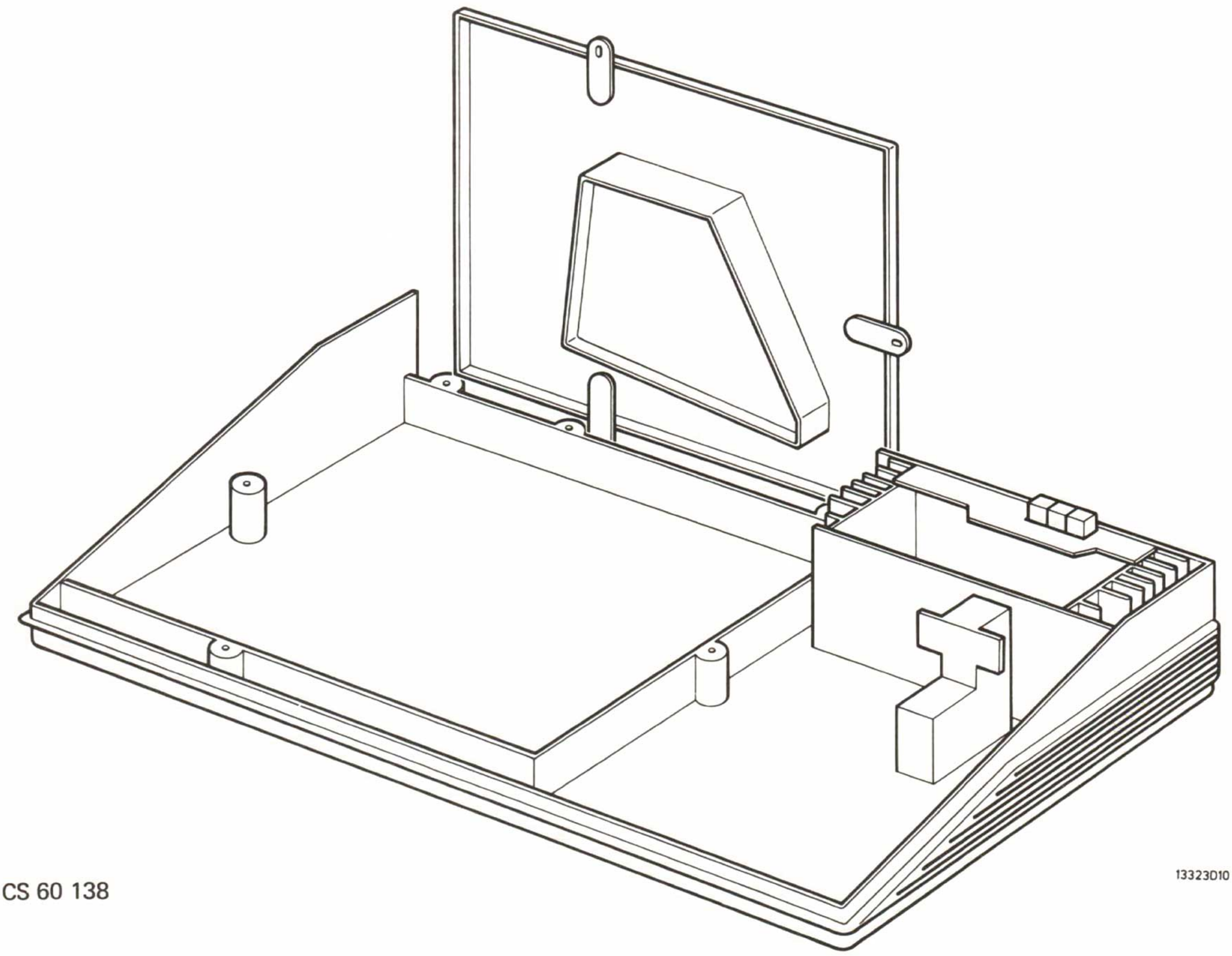

13323D10



www.vinylengine.com

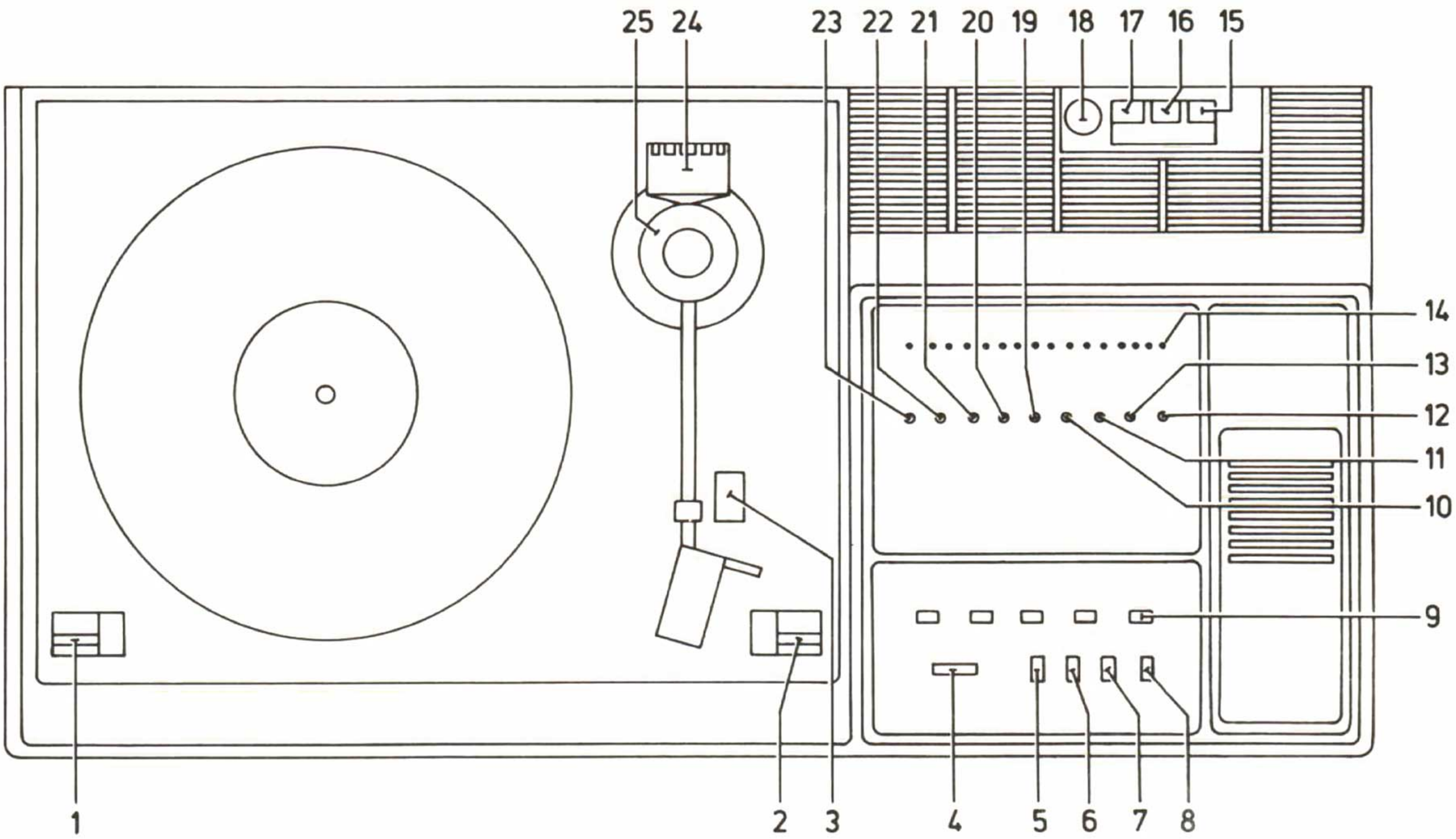


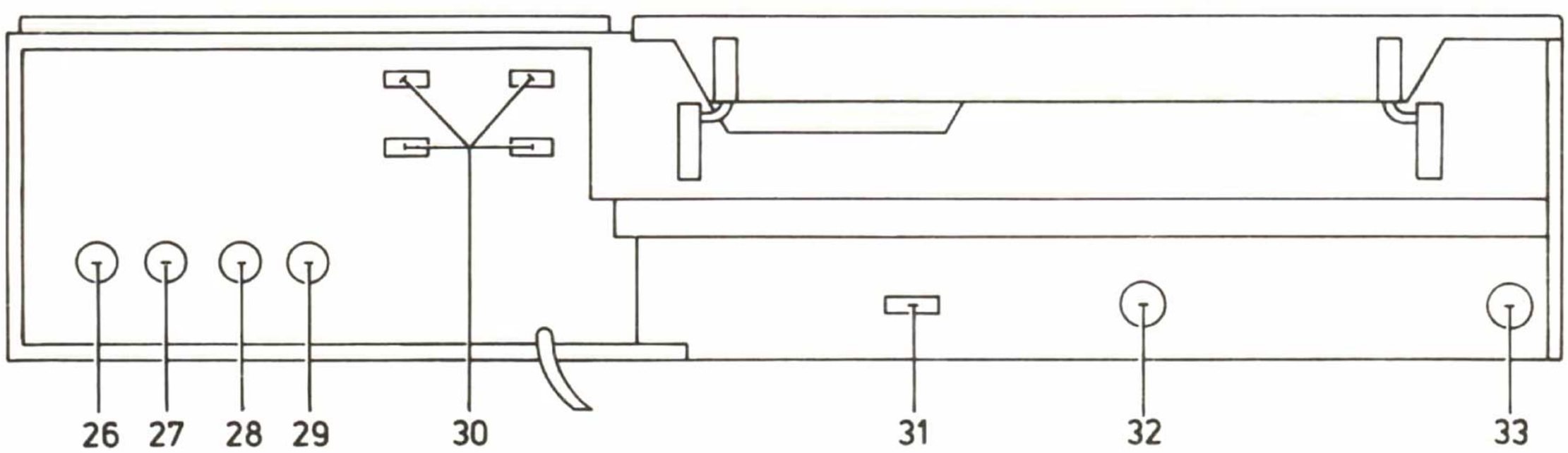


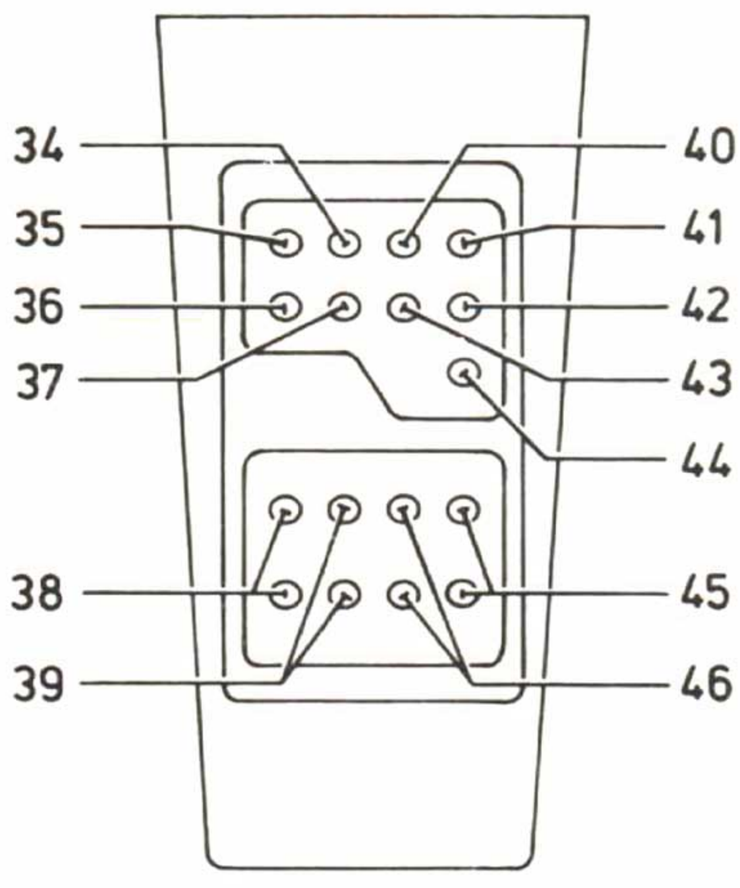


13771C12

www.vinylengine.com

## KNOPPENFUNKTIES

| | | |
|---|---|---|
| 1 | Snelheidskeuzeschakelaar | |
| 2 | Start/Lift/Stopschakelaar | |
| 3 | Naalddrukmeter | |
| 4 | AM-afstemknop | 2004 |
| 5 | Contourschakelaar | SK-D |
| 6 | AFC-schakelaar | SK-E |
| 7 | FM-Monoschakelaar | SK-F |
| 8 | Display-schakelaar | SK-G |
| 9 | Voorkeuze-instelling FM1...5 | 3019...3027 |
| 10 | Indikator FM4 | 7135 |
| 11 | Indikator FM5 | 7133 |
| 12 | Stereo-indicator | 7147 |
| 13 | Indikator AM | 7131 |
| 14 | FM/Analoog display | 7149...7179 |
| 15 | Luidsprekerschakelaar 2 | SK-C |
| 16 | Luidsprekerschakelaar 1 | SK-B |
| 17 | Aan/uitschakelaar | SK-A |
| 18 | Hoofdtelefoon-aansluiting (Jack) | |
| 19 | Indikator FM3 | 7137 |
| 20 | Indikator FM2 | 7139 |
| 21 | Indikator FM1 | 7141 |
| 22 | Indikator Tape | 7143 |
| 23 | Indikator P.U. | 7145 |
| 24 | Naalddrukinstelling | |
| 25 | Dwarsdrukcompensatie | |
| 26 | Luidspreker 2R aansluiting | |
| 27 | Luidspreker 2L aansluiting | |
| 28 | Luidspreker 1R aansluiting | |
| 29 | Luidspreker 1L aansluiting | |
| 30 | Zekeringen | 1401-1404 |
| 31 | AM-antenne-aansluiting | |
| 32 | Tape-aansluiting | |
| 33 | FM-antenne-aansluiting | |

**Zender**

| | |
|---|---|
| 34 | Tape-functie |
| 35 | P.U.-functie |
| 36 | FM-3-functie |
| 37 | FM-4-functie |
| 38 | Volume +/– functie |
| 39 | Balans R/L-functie |
| 40 | FM-1-functie |
| 41 | FM-2-functie |
| 42 | AM-functie |
| 43 | FM-5-functie |
| 44 | Mute-functie |
| 45 | Treble +/– functie |
| 46 | Bass +/– functie |

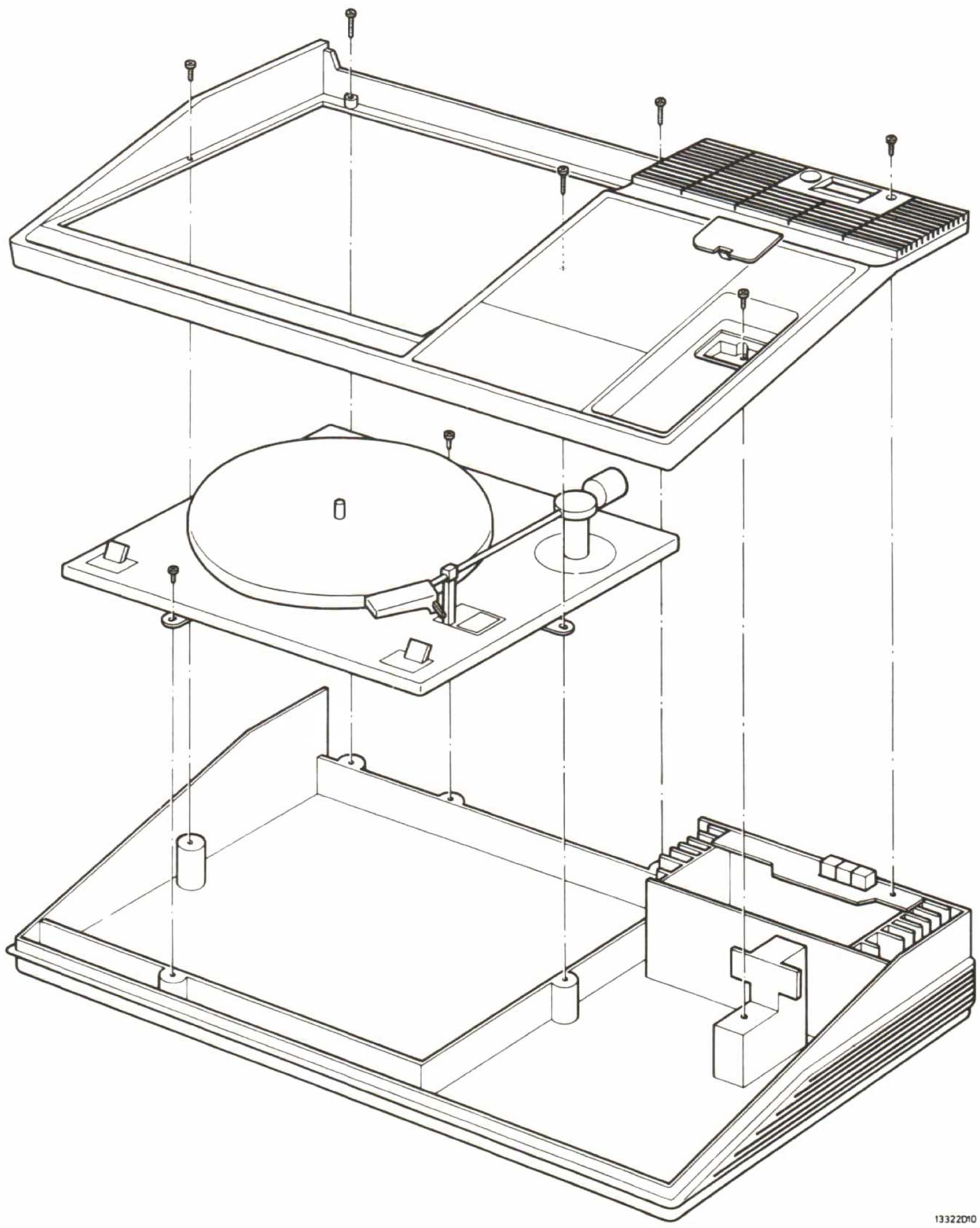




www.vinylengine.com

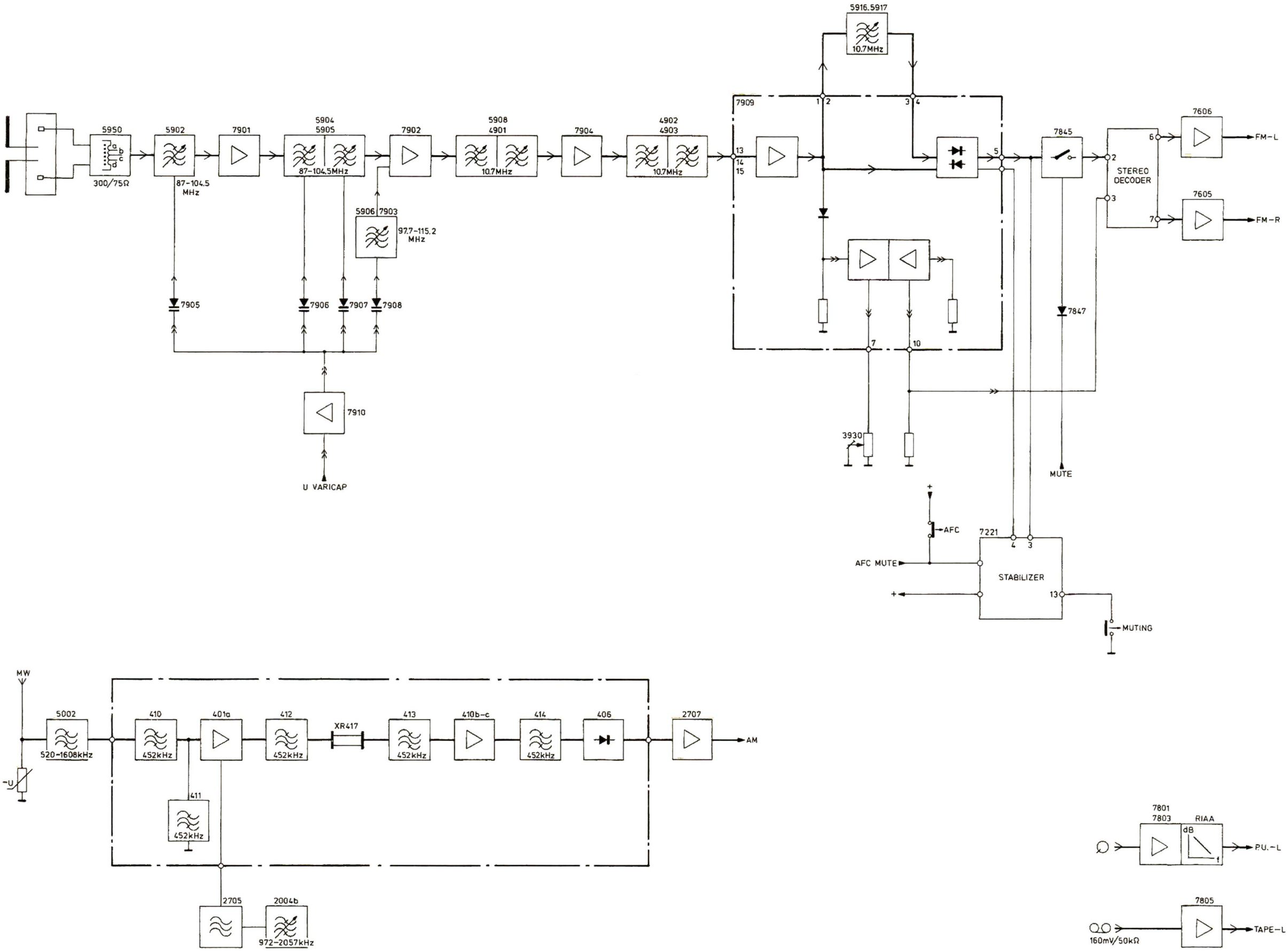
5950
300/75Ω
5902
87-104.5 MHz
7901
5904
5905
87-104.5MHz
7902
5906 7903
97.7-115.2 MHz
5908
4901
10.7MHz
7904
4902
4903
10.7MHz
7905
7906
7907
7908
7910
U VARICAP
5916.5917
10.7MHz
7909
13
14
15
1
2
3
4
5
7
10
3930
7845
7847
MUTE
STEREO DECODER
2
3
6
7
7606
7605
FM-L
FM-R
AFC
AFC MUTE
7221
STABILIZER
13
MUTING
MW
5002
520-1608kHz
-U
410
452kHz
401a
412
452kHz
XR417
413
452kHz
410b-c
414
452kHz
406
2707
AM
411
452kHz
2705
2004b
972-2057kHz
7801
7803
RIAA
dB
f
P.U.-L
7805
160mV/50kΩ
TAPE-L

13782E12

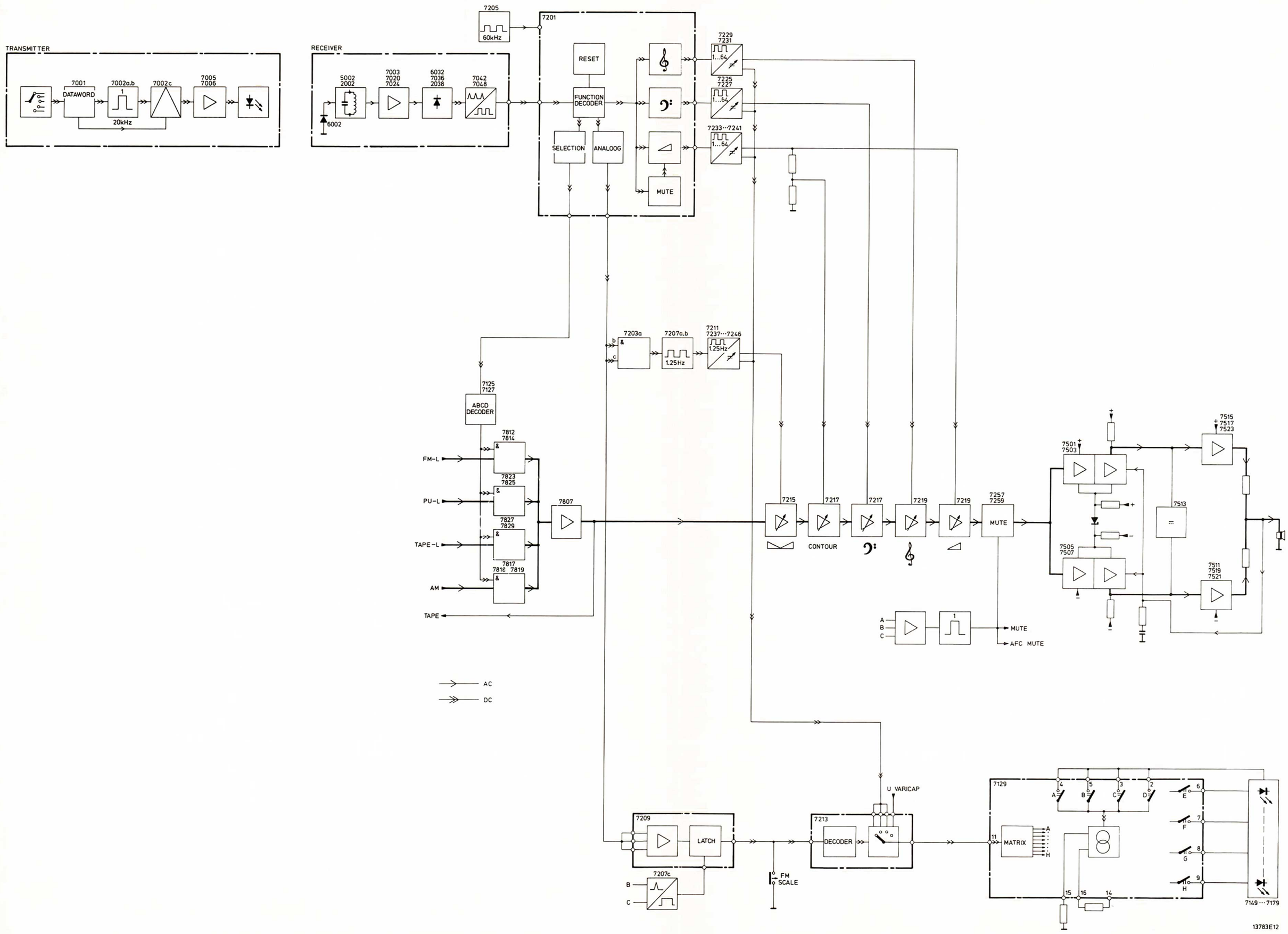
TRANSMITTER
7001
DATAWORD
7002a.b
1
20kHz
7002c
7005
7006
RECEIVER
5002
2002
6002
7003
7020
7024
6032
7036
2038
7042
7048
7205
60kHz
7201
RESET
FUNCTION DECODER
SELECTION
ANALOOG
MUTE
7229
7231
7225
7227
7233···7241
1...64
7203a
7207a.b
1.25Hz
7211
7237···7246
7125
7127
ABCD DECODER
7812
7814
7823
7825
7827
7829
7817
7818
7819
FM-L
PU-L
TAPE-L
AM
TAPE
7807
7215
7217
7219
CONTOUR
7257
7259
MUTE
AFC MUTE
7501
7503
7505
7507
7513
7515
7517
7523
7511
7519
7521
AC
DC
7209
LATCH
7207c
FM SCALE
U VARICAP
7213
DECODER
7129
MATRIX
7149···7179
13783E12

| SK . . . Wave range | Signal to | ◇ | | Indication |
|---|---|---|---|---|
| FM (87.5-104 MHz) [3] | | | R3611 | (via 10 MΩ) 76 kHz ± 300 Hz at 7IC401 |
| | S (L = -R = 5 kHz) 27 mV~ | (F) | S5601 | (5) [4] |
| | Multiplex Right 1 kHz 27 mV~ | | R3617 | ↕ (4) minimum |
| | Multiplex Right 5 kHz 27 mV~ | | R3621 | |
| | Pilot 19 kHz 18 mV~ | | R3605 | maximum clockwise |
| | | | R3605 | anti-clockwise till IND is lit |

↕ Repeat - Herhalen - Répéter - Wiederholen

GB

[3] First set S5601-R3611-R3621 and R3617 to mid-position. Turn the wiper of R3605 anti-clockwise as far as possible.

[4] Connect an oscillograph. Adjust the S-signal to maximum (1) so that a well-defined zero passage is obtained (2).
The envelopes of the L and R signals should intersect on the zero-axis (2), (see figure).

NL

[3] S5601-R3611-R3617 en R3621 vooraf in de middenstand plaatsen. De loper van R3605 maximaal linksom draaien.

[4] Sluit een oscillograaf aan. Het S-signaal op maximum (1) afregelen en zo dat een scherpe nuldoorgang verkregen wordt (2). De omhullenden van het L en R signaal moeten elkaar op de nulas snijden (2) (zie figuur).

F

[3] Mettre S5601-R3611-R3617 et R3621 au préalable, en position médiane. Tourner le curseur de R3605 à fond vers la gauche.

[4] Brancher un oscillographe. Régler le signal-S sur maximum (1) pour que le passage du zéro soit précis (2).
Les enveloppes du signal L et R doivent s'entrecouper sur l'axe du zéro (2), voir figure.

D

[3] S5601-R3611-R3617 und R3621 zuvor in die Mittelstellung bringen. Den Schleifer von R3605 bis zum linken Anschlag drehen.

[4] Einen Oszillografen anschliessen, dass S-Signal auf Maximum (1) justieren; und zwar so, dass ein scharfer Nulldurchgang erhalten wird. Die Umhüllungskurven des L- und des R-Signals sollen sich auf der Nullachse schneiden (2). Siehe Abbildung.

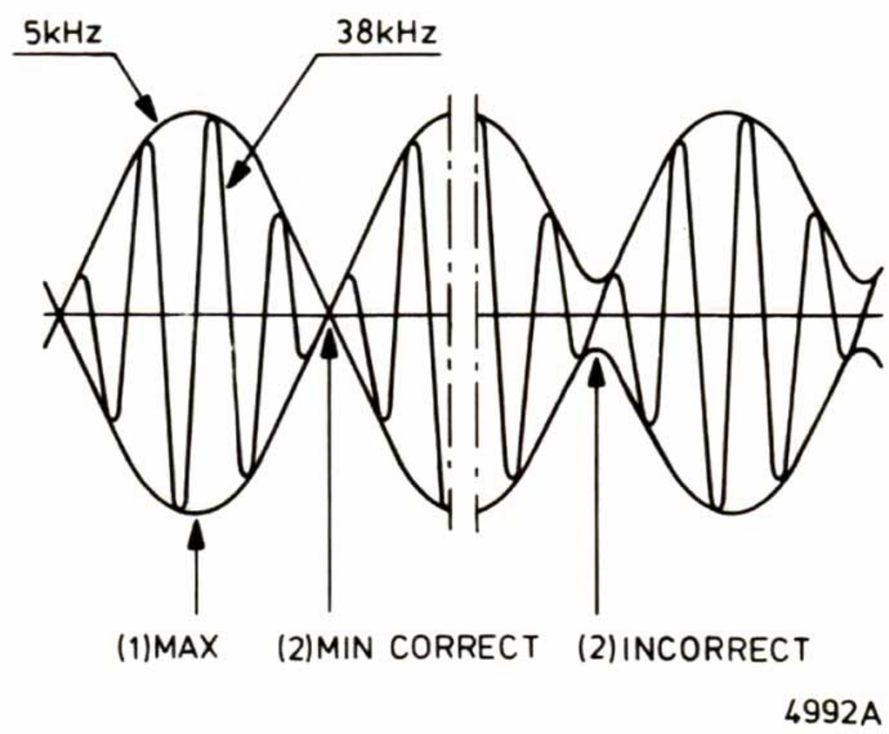




www.vinylengine.com

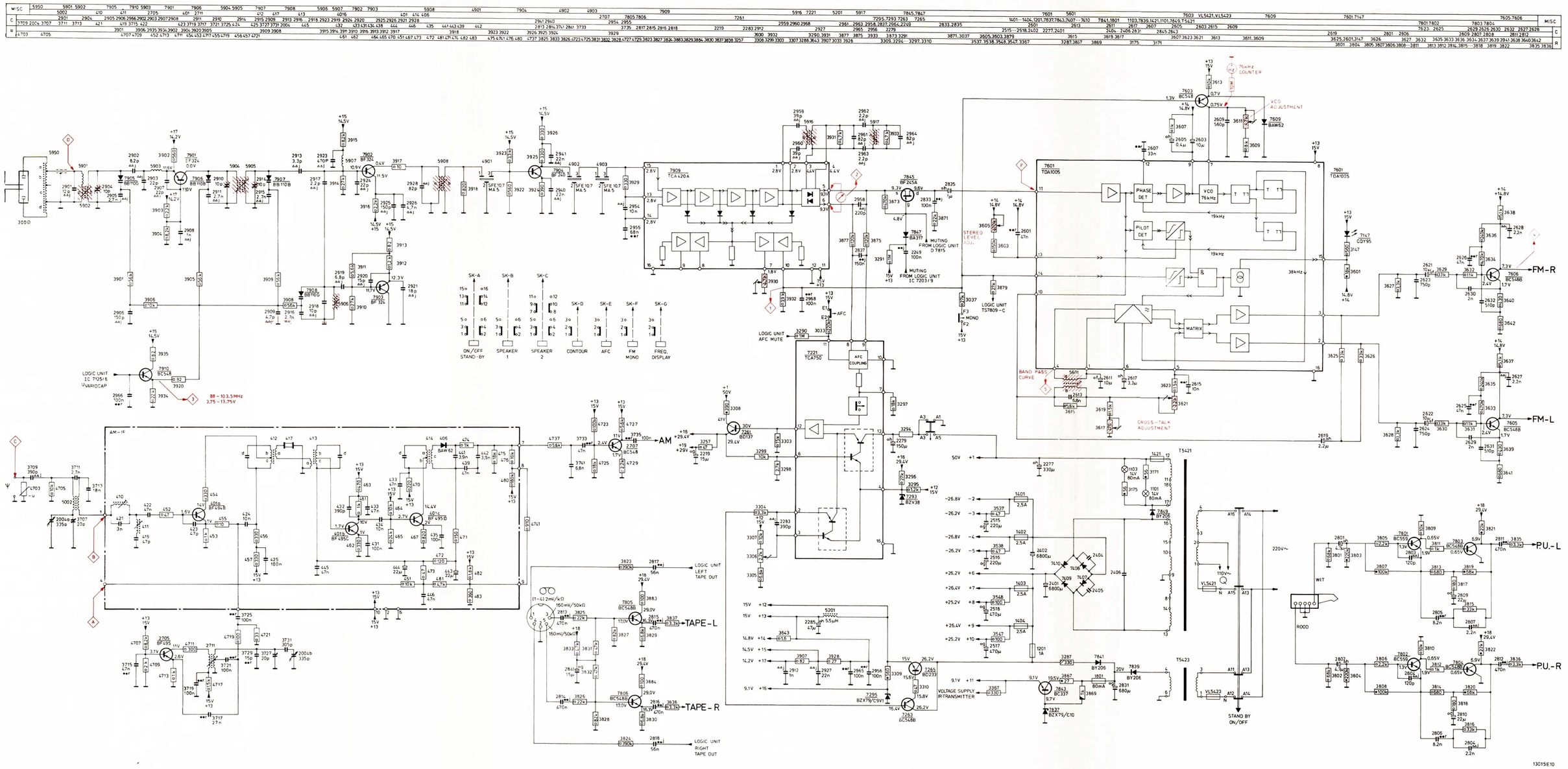
10
11
12
MISC
C
R
TDA1005
TCA420A
TCA750
BF245A
BC548
BD137
BC548B
BC559
BC237
BZX79/C9V1
BZX75/C10
BAW62
BB110B
BF494B
BF495D
AM-IF
AM
TAPE-L
TAPE-R
LOGIC UNIT LEFT TAPE OUT
LOGIC UNIT RIGHT TAPE OUT
LOGIC UNIT TS7809-C
LOGIC UNIT IC 7125/6 (VARIOCAP)
LOGIC UNIT AFC MUTE
MUTING FROM LOGIC UNIT D 7815
MUTING FROM LOGIC UNIT IC 7203/9
76kHz COUNTER
VCO ADJUSTMENT
STEREO LEVEL ADJ.
BAND PASS CURVE
CROSS-TALK ADJUSTMENT
VOLTAGE SUPPLY IR TRANSMITTER
STAND BY ON/OFF
FM-R
FM-L
PU.-L
PU.-R
88 – 103.5MHz
3.75 – 13.75V
SK-A
SK-B
SK-C
SK-D
SK-E
SK-F
SK-G
ON/OFF STAND-BY
SPEAKER 1
SPEAKER 2
CONTOUR
AFC
FM MONO
FREQ. DISPLAY
13015E10

| | | |
|---|---|---|
| MISC. | 7909 4903 4902 7910 7904 7802 7801 7804 7903 7803 4901 7805 7908 7902 7907 7806 7905 7901 7906 1801 7843 7839 7837 7841 SK-C SK-F 7221 7261 7293 SK-E SK-D 7265 7263 | MISC |
| MISC. | 7831 7833 7603 7609 7821 7814 7601 7809 7830 7829 7819 7823 7826 7828 7813 7818 7812 7811 7605 7808 7827 7817 7847 7845 7815 | MISC |
| S | 5601 5916 5917 5906 5907 5908 5901 5905 5201 | S |
| C | 2956 2968 3951 2955 2958 2966 2941 2940 3803 2808 2923 2918 2921 2926 2925 2809 2813 2815 2909 2917 2901 2908 2814 2816 2831 | C |
| C | 2611 2613 2619 2827 2829 2825 2621 2624 2617 2823 2615 2609 2605 2603 2607 2601 2820 2625 2632 2819 2818 2817 2835 2839 2837 2833 2281 2279 2283 2285 2215 2257 2277 2243 2244 | C |
| R | 3928 3933 3809 3801 3922 3926 3935 3934 3810 3822 3907 3918 3884 3883 3823 3833 3901 3906 3869 3867 3019 3015 3017 3009 3035 3007 3021 3033 3011 3029 3013 3031 3001 3023 3025 3027 | R |
| R | 3617 3619 3615 3613 3623 3625 3631 3609 3611 3607 3605 3601 3603 3648 3631 3637 3639 3643 3823 3833 3901 3906 3287 3301 3302 3297 3298 3305 3303 3306 3307 3308 3295 3296 3299 3294 3304 3311 3310 3365 3366 | R |
| R | 3859 3865 3885 3855 3847 3851 3879 3853 3844 3845 3857 3858 3861 3864 3835 3843 3848 3877 3875 3873 3871 | R |

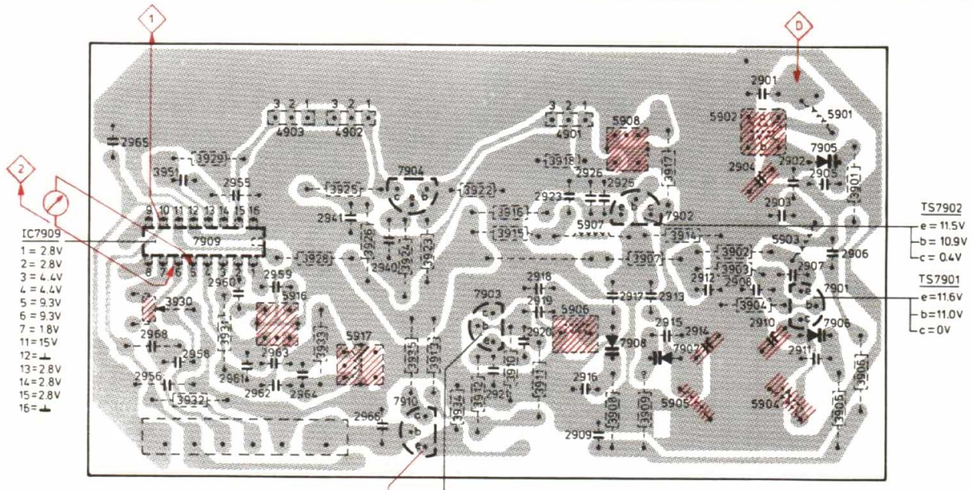


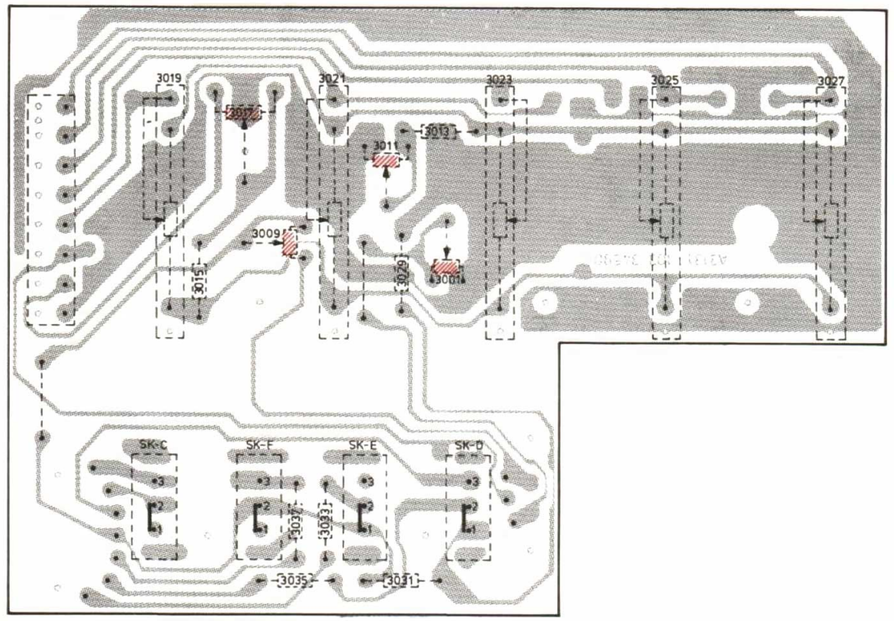


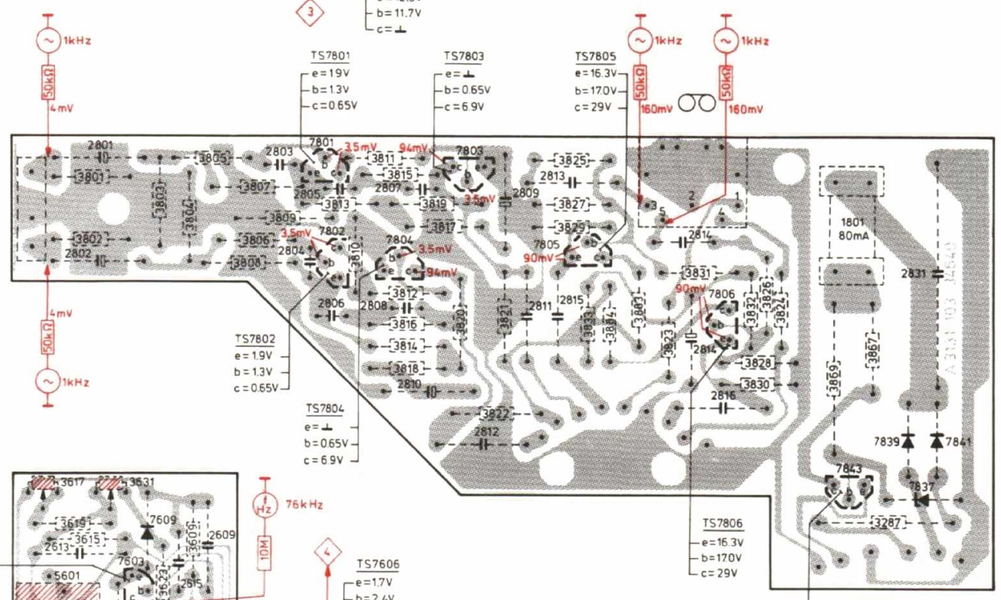


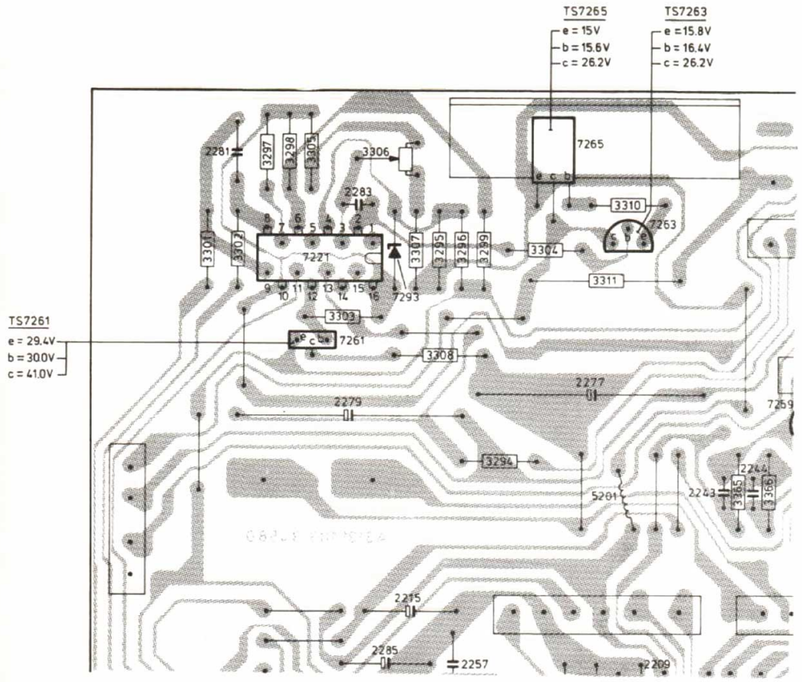


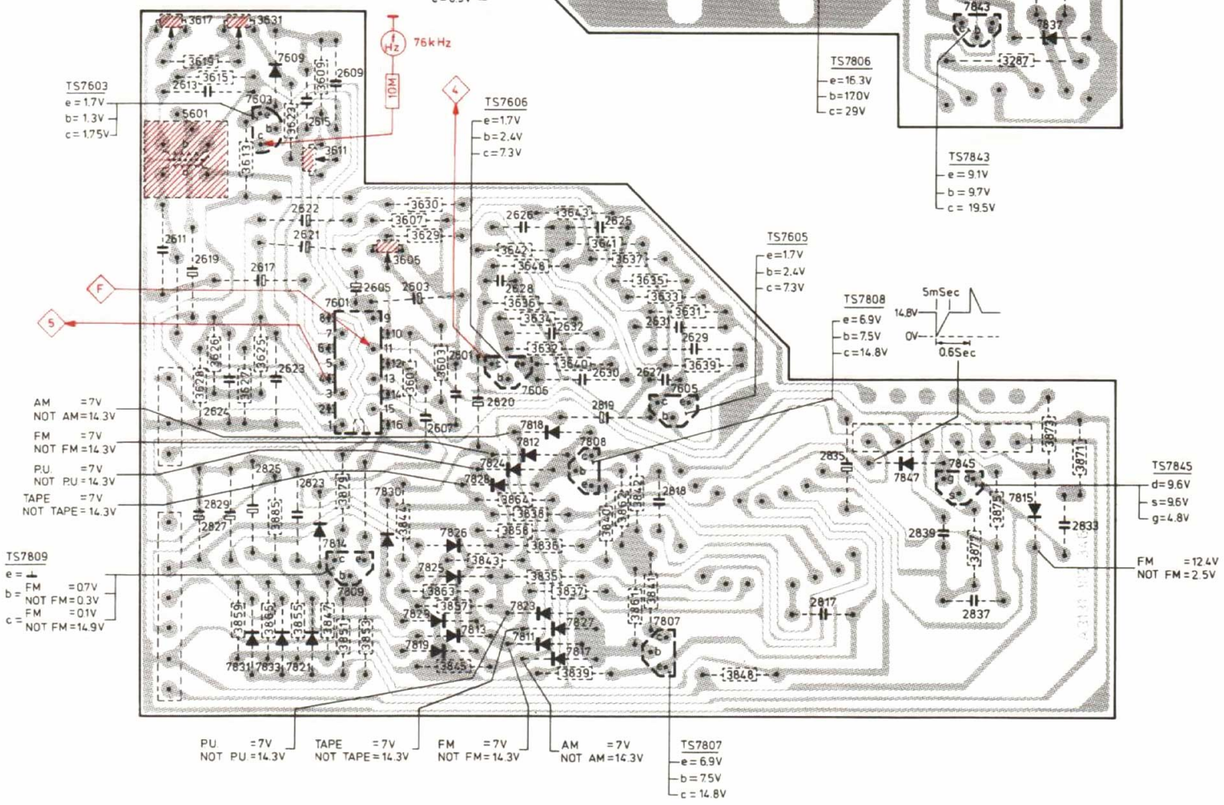


13178E10

| SK<br>Wave range | Signal to | ◇ | Trimming point | Detune | | | |
|---|---|---|---|---|---|---|---|
| FM<br>88.0 - 103.5 MHz | | | 1 | 2904<br>2910<br>2914 | | | |
| | | | | | 3930 | ◇1 min. 1.0 V ⎓<br>max. 1.5 V ⎓ | |
| | | | | | 5916-a | ◇2 min. V ⎓ | |
| 103.5 MHz<br>1 kHz | ◇D | | | | | ◇3 13.75 V ⎓ | |
| | | | | | 5906 | ◇2 min. V ⎓ | ◇4 max. 1 kHz |
| 88.0 MHz<br>1 kHz | | | | | | ◇3 3.75 V ⎓ | |
| | | | | | 5906 | ◇2 min. V ⎓ | ◇4 max. 1 kHz |
| | | | | | 5902<br>5904<br>5905 | | ◇4 max. 1 kHz |
| 103.5 MHz<br>1 kHz | | | | | 2904<br>2910<br>2914 | | |
| | | | | | 5908 | | ◇4 max. 1 kHz |
| | | 2 | | | 5916-a | ◇2 min. V ⎓ | |
| 103.5 MHz<br>1 kHz | ◇D | | | | 5917 | | ◇4 min. 1 kHz |
| 88 MHz<br>20 μV | | | | | 3930 | ◇1 0.8 V ⎓ | |

GB

1 Set C2904-2910-2914 to mechanical mid-position.

2 Tune the set so that at ◇3 13.75 V d.c. is measured.

F

1 Placer C2904-2910-2914 en position médiane.

2 Syntoniser de façon à mesurer 13,75 V ⎓ sur ◇3.

NL

1 C2904-2910-2914 in de mechanische middenstand zetten.

2 Afstemmen en wel zo dat op ◇3 13,75 V ⎓ gemeten wordt.

D

1 C2904-2910-2914 in mechanische Mittelstellung bringen.

2 So abstimmen, dass an ◇3 13,75 V ⎓ gemessen wird.



www.vinylengine.com

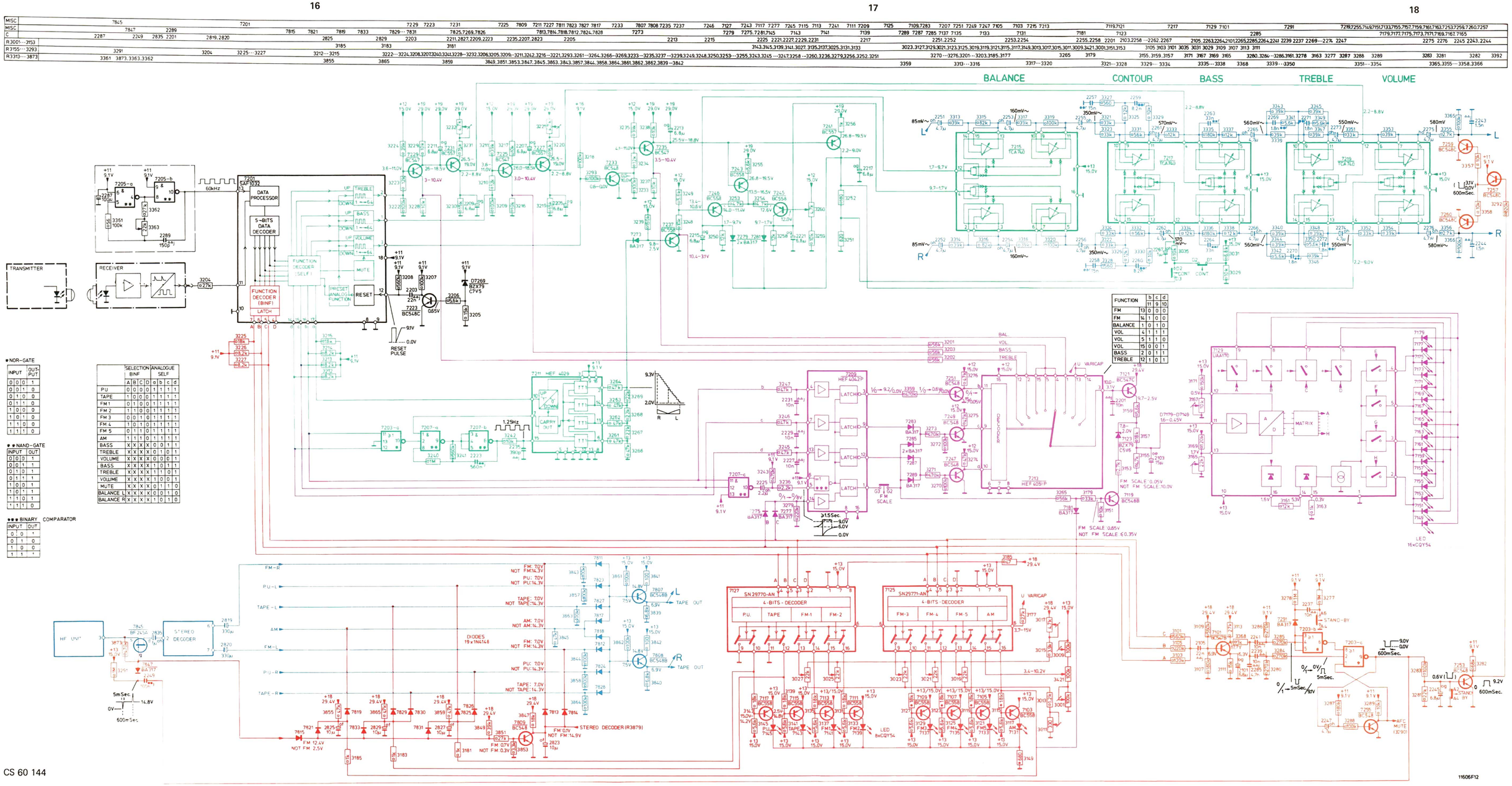


| FUNCTION | b | c | d |
|---|---|---|---|
| | 11 | 9 | 10 |
| FM | 13 | 0 | 0 | 0 |
| FM | 14 | 1 | 0 | 0 |
| BALANCE | 1 | 0 | 1 | 0 |
| VOL | 4 | 1 | 1 | 1 |
| VOL | 5 | 1 | 1 | 0 |
| VOL | 15 | 0 | 0 | 1 |
| BASS | 2 | 0 | 1 | 1 |
| TREBLE | 12 | 1 | 0 | 1 |

| | SELECTION BINF | | | | ANALOGUE SELF | | | |
|---|---|---|---|---|---|---|---|---|
| | A | B | C | D | a | b | c | d |
| P.U | 0 | 0 | 0 | 0 | 1 | 1 | 1 | 1 |
| TAPE | 1 | 0 | 0 | 0 | 1 | 1 | 1 | 1 |
| FM 1 | 0 | 1 | 0 | 0 | 1 | 1 | 1 | 1 |
| FM 2 | 1 | 1 | 0 | 0 | 1 | 1 | 1 | 1 |
| FM 3 | 0 | 0 | 1 | 0 | 1 | 1 | 1 | 1 |
| FM 4 | 1 | 0 | 1 | 0 | 1 | 1 | 1 | 1 |
| FM 5 | 0 | 1 | 1 | 0 | 1 | 1 | 1 | 1 |
| AM | 1 | 1 | 1 | 0 | 1 | 1 | 1 | 1 |
| BASS | X | X | X | X | 0 | 0 | 1 | 1 |
| TREBLE | X | X | X | X | 1 | 0 | 1 | 0 |
| VOLUME | X | X | X | X | 0 | 0 | 0 | 1 |
| BASS | X | X | X | X | 1 | 0 | 1 | 1 |
| TREBLE | X | X | X | X | 1 | 1 | 0 | 1 |
| VOLUME | X | X | X | X | 1 | 0 | 0 | 1 |
| MUTE | X | X | X | X | 0 | 1 | 1 | 0 |
| BALANCE L | X | X | X | X | 0 | 0 | 1 | 0 |
| BALANCE R | X | X | X | X | 1 | 0 | 1 | 0 |

● NOR-GATE

| INPUT | | | | OUTPUT |
|---|---|---|---|---|
| 0 | 0 | 0 | | 1 |
| 0 | 0 | 1 | | 0 |
| 0 | 1 | 0 | | 0 |
| 0 | 1 | 1 | | 0 |
| 1 | 0 | 0 | | 0 |
| 1 | 0 | 1 | | 0 |
| 1 | 1 | 0 | | 0 |
| 1 | 1 | 1 | | 0 |

● ● NAND-GATE

| INPUT | | | | OUT |
|---|---|---|---|---|
| 0 | 0 | 0 | | 1 |
| 0 | 0 | 1 | | 1 |
| 0 | 1 | 0 | | 1 |
| 0 | 1 | 1 | | 1 |
| 1 | 0 | 0 | | 1 |
| 1 | 0 | 1 | | 1 |
| 1 | 1 | 0 | | 1 |
| 1 | 1 | 1 | | 0 |

● ● ● BINARY COMPARATOR

| INPUT | | OUT |
|---|---|---|
| 0 | 0 | 1 |
| 0 | 1 | 0 |
| 1 | 0 | 0 |
| 1 | 1 | 1 |

| | |
|---|---|
| MISC | 7149 7151 7153 7155.7129 7157 7159 7161 7163 7165 7167 7169 7171.7123.7173.7119.7121.7175.7177 7179 7221.7261 7293 7265 VL1201 5201.7263 7259.7257.7260.7279.7253 7246.7245.7231.7233.7227.7241.7225.7243.7229.7235.7295 7605 7808 7818 7812 7606 7601 7609 7603 5601 |
| MISC | 7147 7103 7131.7105.1101 7133 7101 7135.7125 7109.7137 7111.7101.7139 7113.7141 7115.7103.7143 7117.7127.7145 7181 7215 7217 7281 7219 7255.7289.7285.7249.7247.7291.7273.7213.7203.7251.7237.7283.7287. 7275.7277.7223.7269.7201.7211 7209 7815 7207 7845 7847 7807 7811.7817.7823 ··· 7830.7813.7819.7809.7821.7814.7833.7831 |
| C | 2289 2281 2103 2279.2283.2285.2215.2257 2205.2272.2221 2201 2243.2244 2219 2245 2207.2213.2211 2629 2631 2625 2632 2626 2628 2603.2609.2605.2622.2621.2615.2617.2619.2613.2611 |
| C | 2101 2105 2251.2252.2253.2254.2255.2261.2256.2259 2260.2263 ··· 2266.2258 2209.2269.2201.2270.2267.2271 ··· 2275.2274.2217.2276.2239.2241.2237 2285 2247 2249 2237 2235.2203 2231 2833 2229 2223 2225 2837.2839 2835 2817 2818 2627 2630 2819 2820 2601 2607 2822 2623 2825 2624.2829.2827 |
| R | 3363 3362.3361 3171.3167.3161.3163.3169 3165 3155 3157 3159.3151 3153 3297.3298.3303.3305 ··· 3308.3296 ··· 3296.3299.3304 3310 3357.3358.3292.3282.3281.3257.3259.3263.3249.3209 ··· 3211.3219 ··· 3224.3260.3228 ··· 3232 3217.3255.3256.3258 3631 ··· 3643.3603.3630.3629.3607.3605.3601.3609.3631.3623.3613.3615.3625 ··· 3628.3617.3619 |
| R | 3149 3117 3115.3119.3123.3121.3127 3125 3129 3133.3131.3135.3139 3137 3143 3141.3145 3179 3314 ··· 3321 3322 ··· 3328 3265.3365.3366.3355.3356 3368 3250.3202.3248.3258.3253.3254.3237.3233 ··· 3235.3201.3293.3309.3218.3225 ··· 3227 3871 3873 3875 3877 3849 3835 ··· 3843.3861 ··· 3864.3857.3845.3844.3853.3879.3851.3847.3855.3885.3865.3859 |
| R | 3173.3147 3185.3111.3113.3183.3181.3109.3107 3101.3103.3105 3177.3175 3291.3339 ··· 3354.3251.3252 3280.3283 ··· 3289.3270 ··· 3279.3202.3239.3359. 3261 ··· 3264.3266 ··· 3269.3204 ··· 3208. 3245.3247.3212 ··· 3215.3236.3240 ··· 3243.3246 3367 |

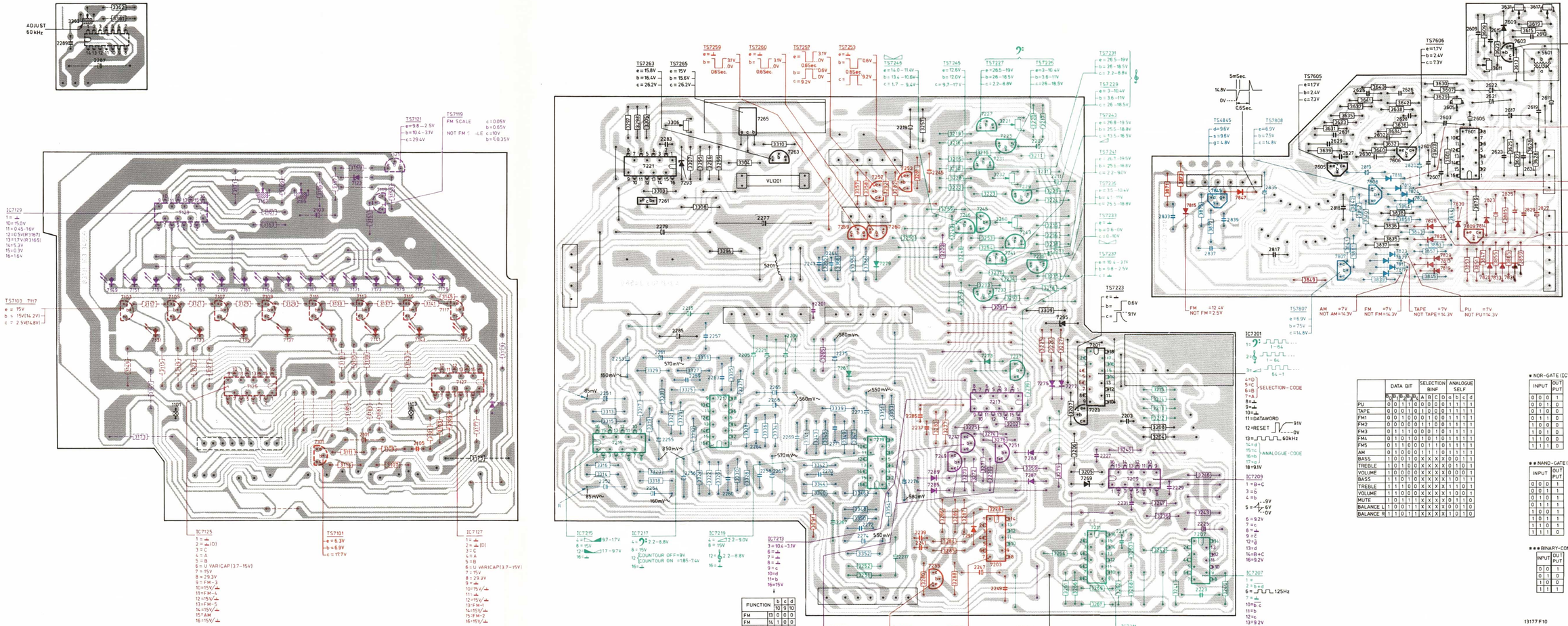


| FUNCTION | b | c | d |
|---|---|---|---|
| | 10 | 9 | 10 |
| FM | 13 | 0 | 0 | 0 |
| FM | 14 | 1 | 0 | 0 |
| BALANCE | 1 | 0 | 1 | 0 |
| VOL | 4 | 1 | 1 | 1 |
| VOL | 5 | 1 | 1 | 0 |
| VOL | 15 | 0 | 0 | 1 |
| BASS | 2 | 0 | 1 | 1 |
| TREBLE | 12 | 1 | 0 | 1 |

| | DATA BIT | | | | SELECTION BINF | | | | ANALOGUE SELF | | | |
|---|---|---|---|---|---|---|---|---|---|---|---|---|
| | $B_0$ | $B_1$ | $B_2$ | $B_3$ | A | B | C | D | a | b | c | d |
| PU | 0 | 0 | 1 | 1 | 0 | 0 | 0 | 0 | 1 | 1 | 1 | 1 |
| TAPE | 0 | 0 | 0 | 1 | 0 | 0 | 0 | 1 | 1 | 1 | 1 | 1 |
| FM1 | 0 | 0 | 1 | 0 | 0 | 0 | 1 | 0 | 1 | 1 | 1 | 1 |
| FM2 | 0 | 0 | 0 | 0 | 1 | 1 | 0 | 0 | 1 | 1 | 1 | 1 |
| FM3 | 0 | 1 | 1 | 1 | 0 | 0 | 0 | 1 | 1 | 1 | 1 | 1 |
| FM4 | 0 | 1 | 0 | 1 | 0 | 1 | 0 | 1 | 1 | 1 | 1 | 1 |
| FM5 | 0 | 1 | 0 | 0 | 0 | 1 | 1 | 1 | 1 | 1 | 1 | 1 |
| AM | 0 | 1 | 0 | 0 | 1 | 1 | 1 | 1 | 1 | 1 | 1 | 1 |
| BASS | 1 | 0 | 0 | 1 | 0 | X | X | X | X | 0 | 0 | 1 |
| TREBLE | 1 | 0 | 1 | 0 | 0 | X | X | X | X | 0 | 1 | 0 |
| VOLUME | 1 | 0 | 0 | 0 | 0 | X | X | X | X | 0 | 0 | 1 |
| BASS | 1 | 1 | 0 | 1 | 0 | X | X | X | X | 1 | 0 | 1 |
| TREBLE | 1 | 1 | 1 | 0 | 0 | X | X | X | X | 1 | 1 | 0 |
| VOLUME | 1 | 1 | 0 | 0 | 0 | X | X | X | X | 1 | 0 | 1 |
| MUTE | 1 | 0 | 1 | 1 | 1 | X | X | X | X | 1 | 0 | 1 |
| BALANCE L | 1 | 0 | 0 | 1 | 1 | X | X | X | X | 0 | 0 | 1 |
| BALANCE R | 1 | 1 | 0 | 1 | 1 | X | X | X | X | 1 | 0 | 1 |

● NOR-GATE (IC7203)

| INPUT | | | OUTPUT |
|---|---|---|---|
| 0 | 0 | 0 | 1 |
| 0 | 0 | 1 | 0 |
| 0 | 1 | 0 | 0 |
| 0 | 1 | 1 | 0 |
| 1 | 0 | 0 | 0 |
| 1 | 0 | 1 | 0 |
| 1 | 1 | 0 | 0 |
| 1 | 1 | 1 | 0 |

●● NAND-GATE (IC7205–IC7207)

| INPUT | | | OUTPUT |
|---|---|---|---|
| 0 | 0 | 0 | 1 |
| 0 | 0 | 1 | 1 |
| 0 | 1 | 0 | 1 |
| 0 | 1 | 1 | 1 |
| 1 | 0 | 0 | 1 |
| 1 | 0 | 1 | 1 |
| 1 | 1 | 0 | 1 |
| 1 | 1 | 1 | 0 |

●●● BINARY-COMPARATOR (IC7209)

| INPUT | | | OUTPUT |
|---|---|---|---|
| 0 | 0 | 0 | 1 |
| 0 | 0 | 1 | 0 |
| 0 | 1 | 0 | 0 |
| 1 | 0 | 0 | 0 |
| 1 | 1 | 1 | 1 |

## (GB) Adjusting the transmitter

If the battery voltage is under 7.5 V, the battery has to be replaced before making adjustments.

- Connect a frequency counter to point 7 of IC 7001, via a 1,5 pF capacitor.
  Depress one of the transmitter keys.
  Adjust the frequency to 20 kHz with C2002.
- In case a frequency counter is non-available, the following procedure may be followed.
  Connect an oscilloscope to point 4 of the plug on the infrared receiver unit.
  Depress one of the transmitter keys.
  If on the oscilloscope the oscillogram of Fig. 1 appears, the transmitter should be directed away from the receiver until the oscillogram of Fig. 2 appears.
  Next, adjust to maximum voltage with C2002, the position of transmitter and receiver may not be changed.

## (D) Abgleichen des Senders

Ist die Batteriespannung < 7,5 V, dann muss man die Batterie ersetzen ehe man mit den Abgleicharbeiten beginnt.

- Einen Frequenzzähler über einen 1,5 pF-Kondensator an Punkt 7 von IC 7001 anschliessen.
  Einen der Knöpfe des Senders drücken.
  Mit C2002 die Frequenz auf 20 kHz.
- Steht kein Frequenzzähler zur Verfügung, so kann folgende Annäherungsmethode angewandt werden.
  Ein Oszilloskop an Punkt 4 der Buchse auf der Infrarot-Empfänger-Einheit.
  Einen der Knöpfe des Senders drücken.
  Erscheint am Oszilloskop das Oszillogramm nach Abb. 1 so muss man den Sender so vom Empfänger wegdrehen, dass das Oszillogramm nach Abb. 2 entsteht. Dann C2002 auf Maximumspannung einstellen, wobei sich die Position zwischen Sender und Empfänger nicht ändern soll.

## (NL) Afregelen van de zender

Indien de batterijspanning < 7,5 V, dient men eerst de batterij te vervangen alvorens met afregelen te beginnen.

- Sluit een frequentieteller via een condensator van 1,5 pF aan op punt 7 van IC 7001.
  Druk één van de knoppen van de zender in.
  Regel met C2002 de frekwentie af op 20 kHz.
- Indien geen frekwentieteller voorhanden is, kan de volgende benaderingsmethode worden toegepast.
  Sluit een oscilloscoop aan op punt 4 van de plug op de infra-rood ontvanger unit.
  Druk één van de knoppen van de zender in.
  Indien op de oscilloscoop het oscillogram van Fig. 1 verschijnt, dient men de zender zodanig van de ontvanger weg te richten totdat het oscillogram van Fig. 2 ontstaat.
  Regel nu C2002 af op maximum spanning waarbij de positie tussen zender en ontvanger niet mag wijzigen.

## (F) Réglage de l'émetteur

Si la tension de pile est < 7,5 V, il faudra d'abord procéder au remplacement de la pile avant d'effectuer le réglage.

- Brancher un fréquencemètre à travers un condensateur de 1,5 pF sur le point 7 du IC 7001.
  Presser un des boutons de l'émetteur.
  Régler la fréquence sur 20 kHz à l'aide de C2002.
- Si l'on ne possède pas de compteur de fréquence appliquer la méthode suivante.
  Brancher un oscilloscope sur le point 4 de la fiche de l'unité de réception par infra-rouge.
  Presser un des boutons de l'émetteur.
  Si l'on obtient l'oscillogramme de la Fig. 1, éloigner l'émetteur du récepteur jusqu'à l'obtention de l'oscillogramme de la Fig. 2.
  Régler à présent C2002 pour une tension maximum, la position entre l'émetteur et le récepteur doit être inchangée.

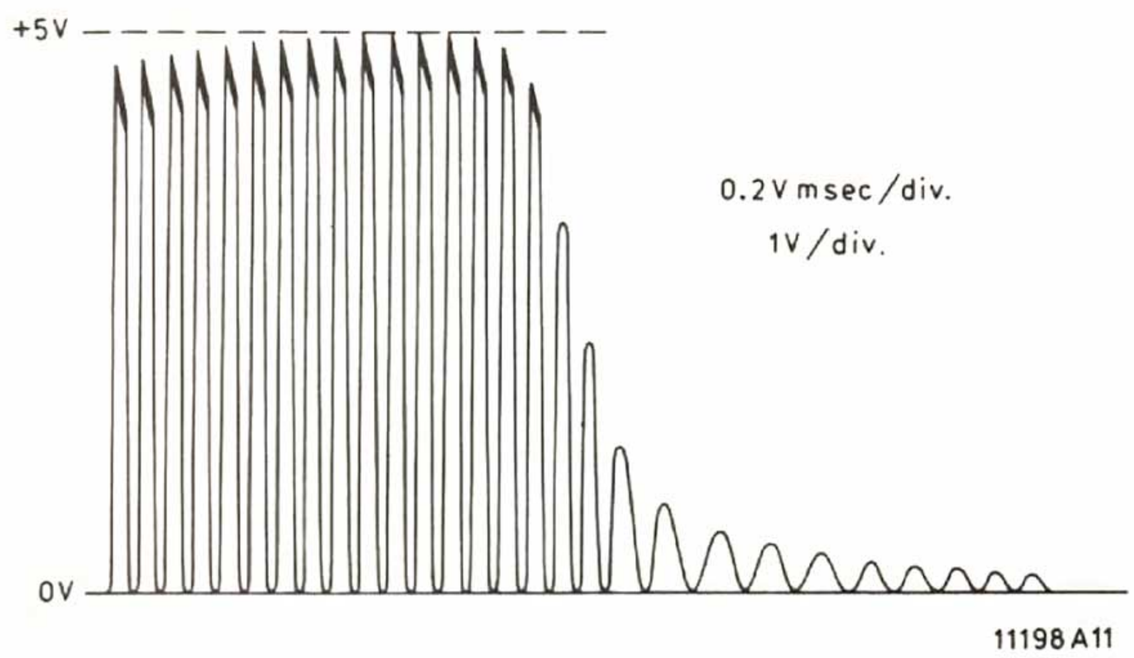


Fig. 1

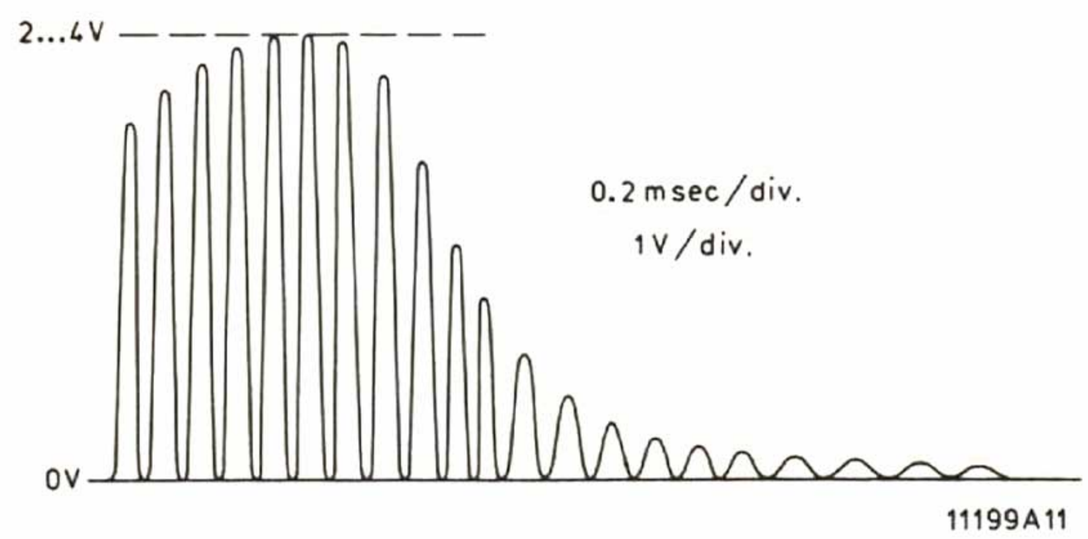


Fig. 2



www.vinylengine.com

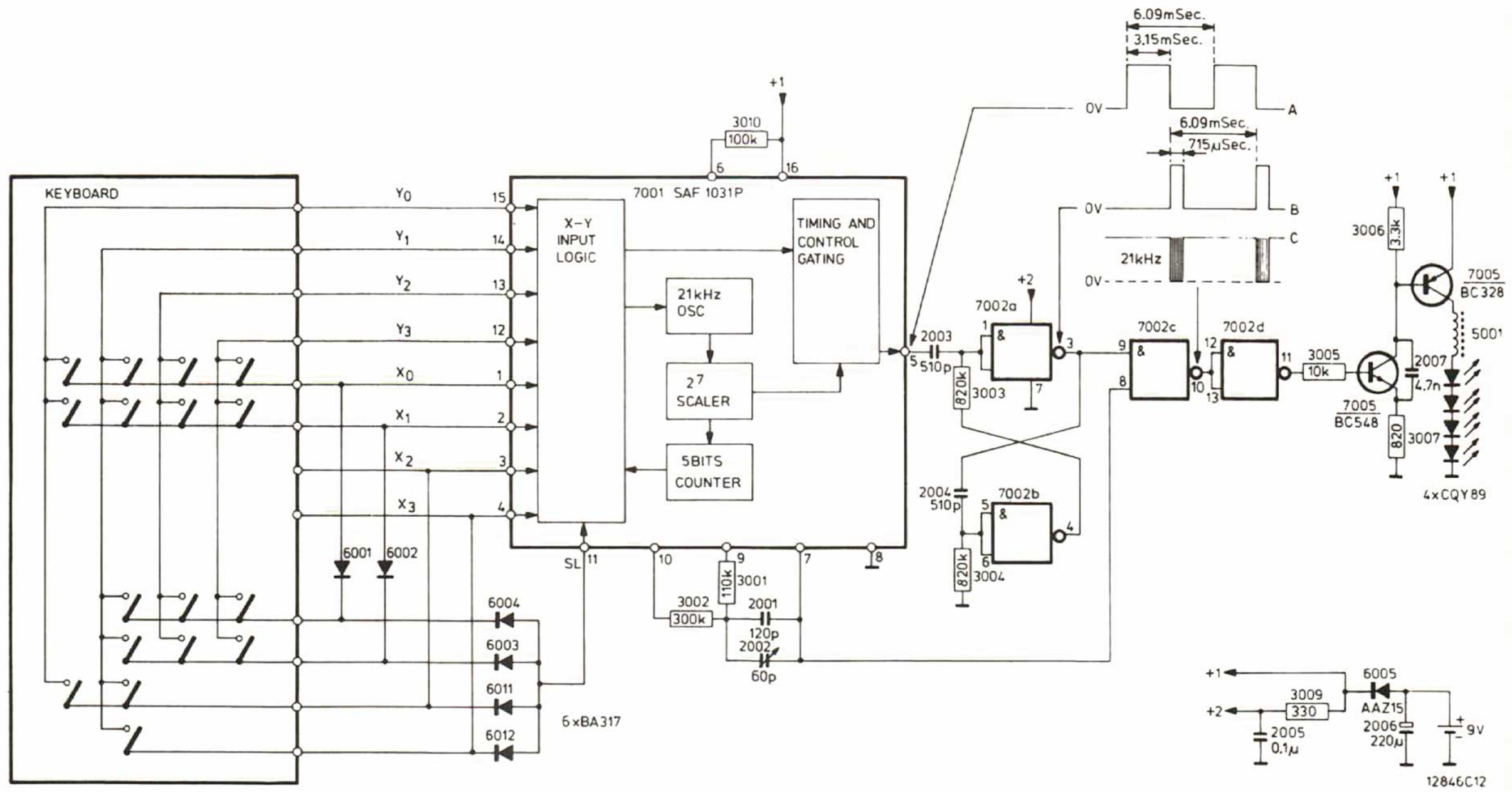
KEYBOARD
7001 SAF 1031P
X-Y INPUT LOGIC
TIMING AND CONTROL GATING
21kHz OSC
$2^7$ SCALER
5BITS COUNTER
6.09mSec.
3,15mSec.
715µSec.
21kHz
7002a
7002b
7002c
7002d
4xCQY89
6xBA317
12846C12

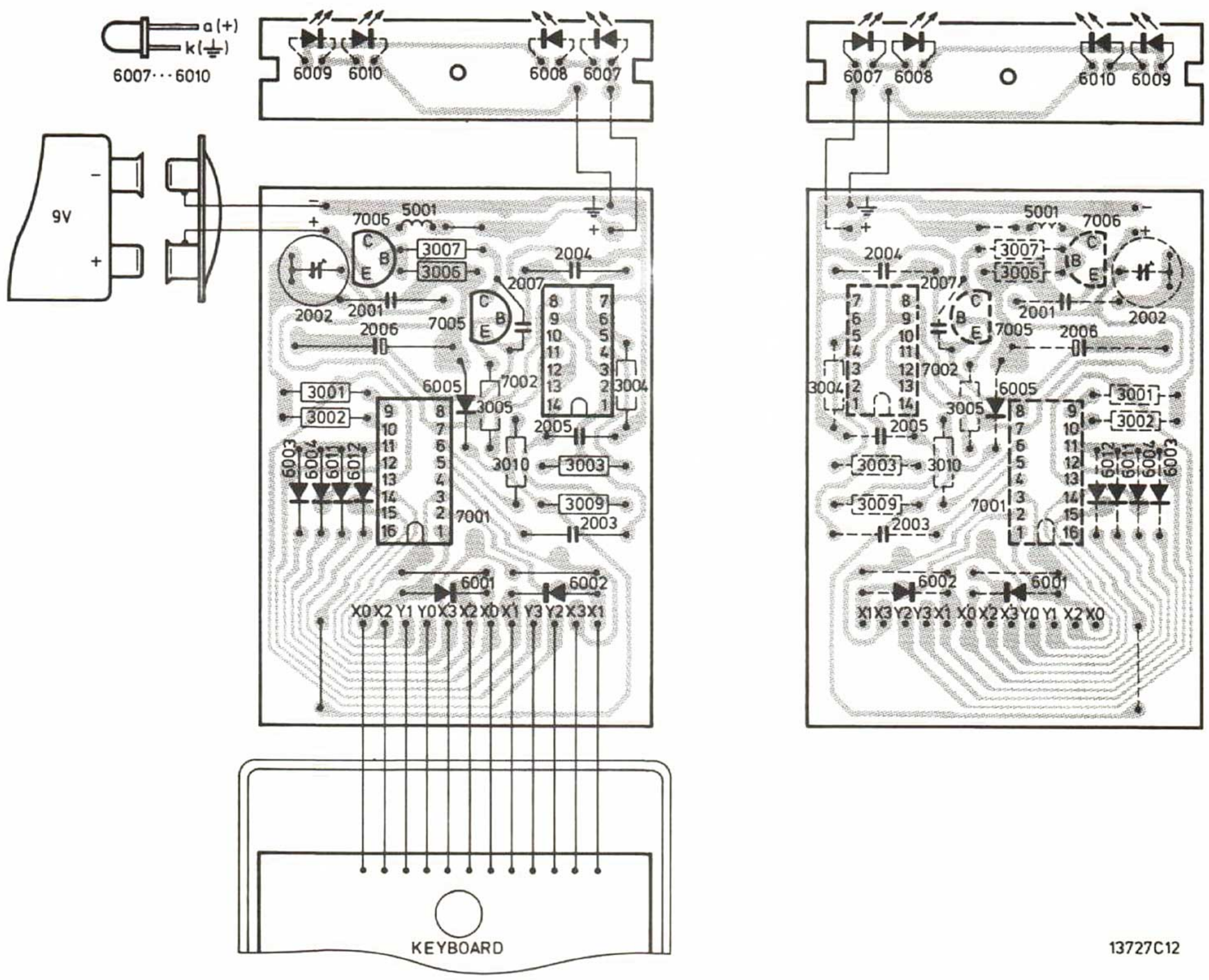
a(+)
k(⏚)
6007···6010
KEYBOARD
13727C12

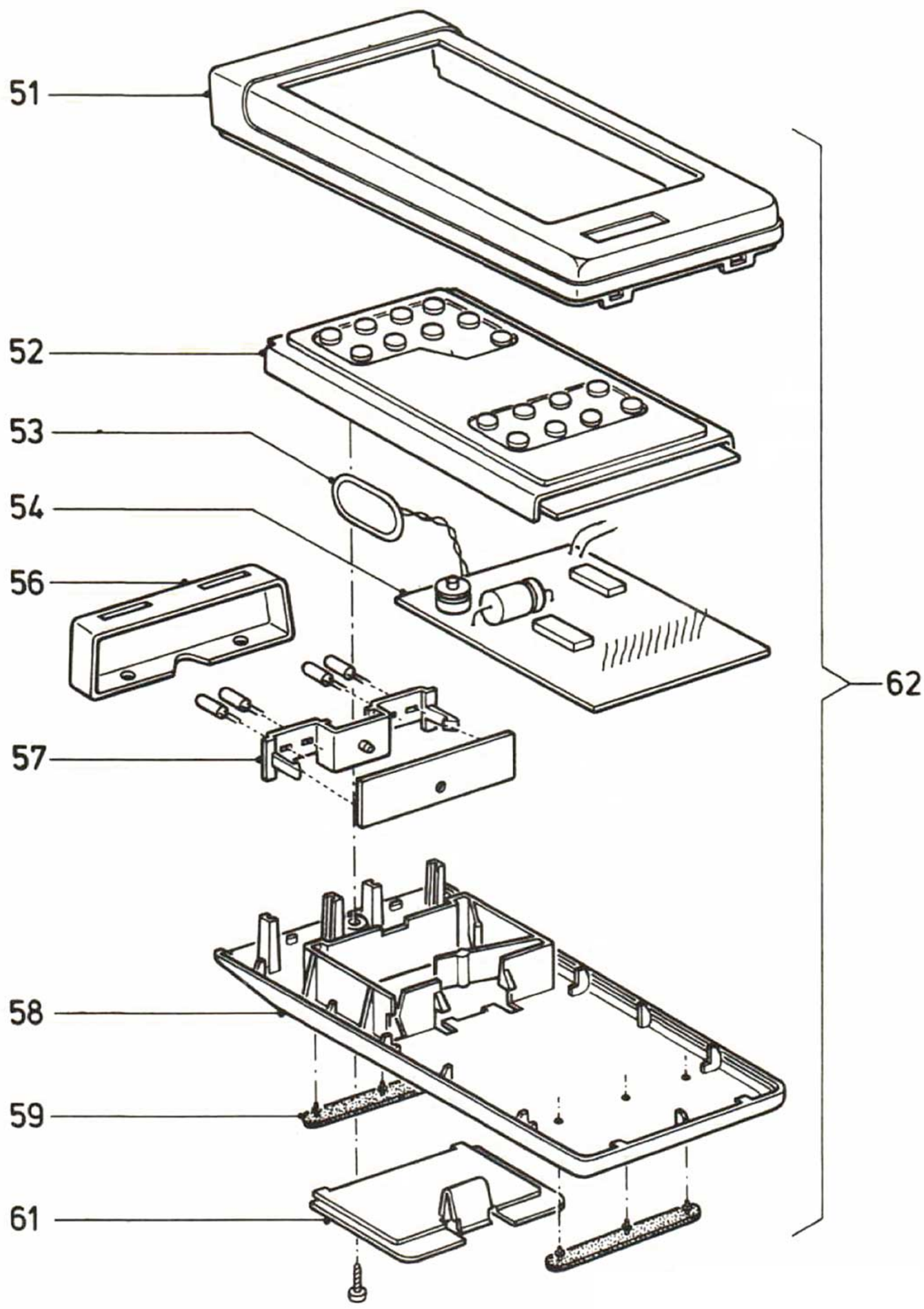


| | |
|---|---|
| 51 | 4822 426 40134 |
| 52 | 4822 432 30035 |
| 53 | 4822 290 80013 |
| 54 | 4822 212 20389 |
| 56 | 4822 432 30034 |
| 57 | 4822 404 30264 |
| 58 | 4822 432 30032 |
| 59 | 4822 462 71082 |
| 61 | 4822 432 30033 |
| 62 | 4822 218 10117 |

| | | |
|---|---|---|
| 7001 | SAF1031p | 4822 209 10006 |
| 7002 | HEF4011 | 5322 209 14046 |
| 7005 | BC548 | 4822 130 40938 |
| 7006 | BC328 | 5322 130 44104 |
| 6001...6005 | | |
| 6011-6012 | BA317 | 4822 130 30847 |
| 6007-6010 | CQ489 | 4822 130 30949 |

| | | |
|---|---|---|
| 2001 | Micropoco 120 pF | 4822 121 50548 |
| 2002 | Trimmer 60 pF | 4822 125 50017 |
| 2003-2004 | Micropoco 510 pF | 5322 121 54055 |

| | | |
|---|---|---|
| 3001 | Met. film 56 Ω | 5322 116 54701 |
| 3002 | Met. film 300 kΩ | 5322 116 54743 |

www.vinylengine.com

| | | |
|---|---|---|
| M | S 2711 TS 2705 TS2707 | S2711 TS2705 TS 2707 |
| C | 3711 3709 3707 3729 3727 3731 3719 3733 3735 3743 | 3713 3728 3715 3717 3721 3741 |
| C | 3713 3728 3715 3717 3721 3741 | 3711 3709 3707 3729 3727 3731 3719 3733 3735 3743 |
| R | 4705 4703 4721 4729 4723 | 4713 4719 4711 4709 4725 4741 4729 |
| R | 4713 4719 4711 4709 4725 4741 4727 | 4703 4705 4721 4729 4723 |

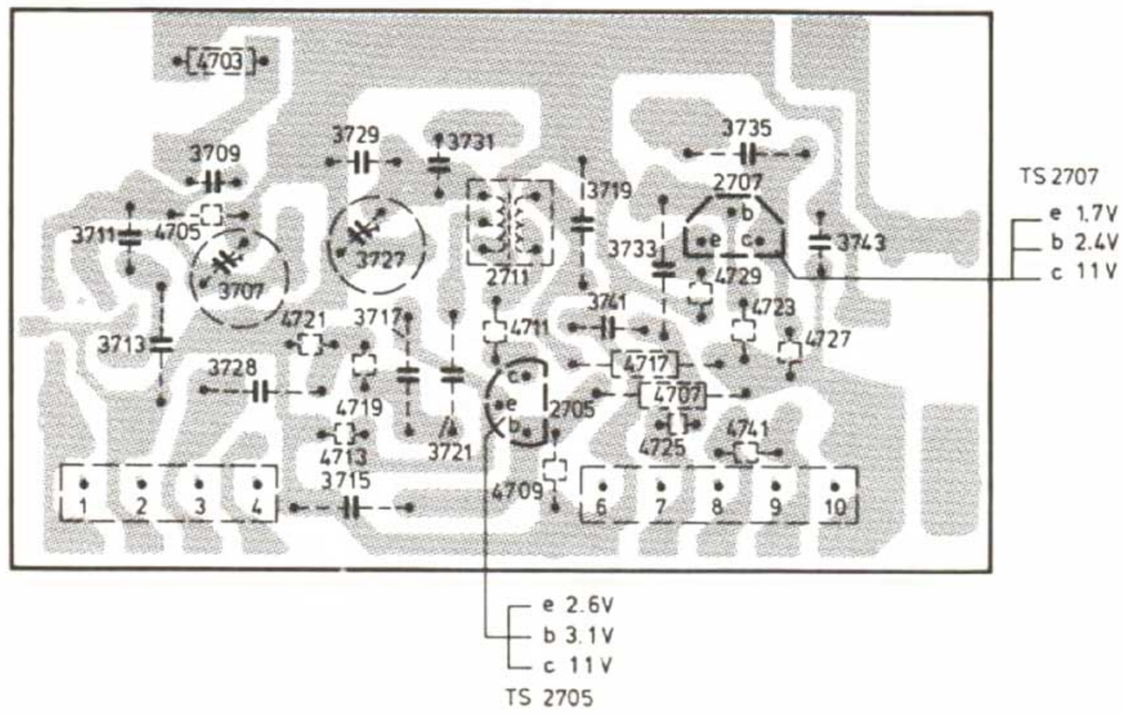


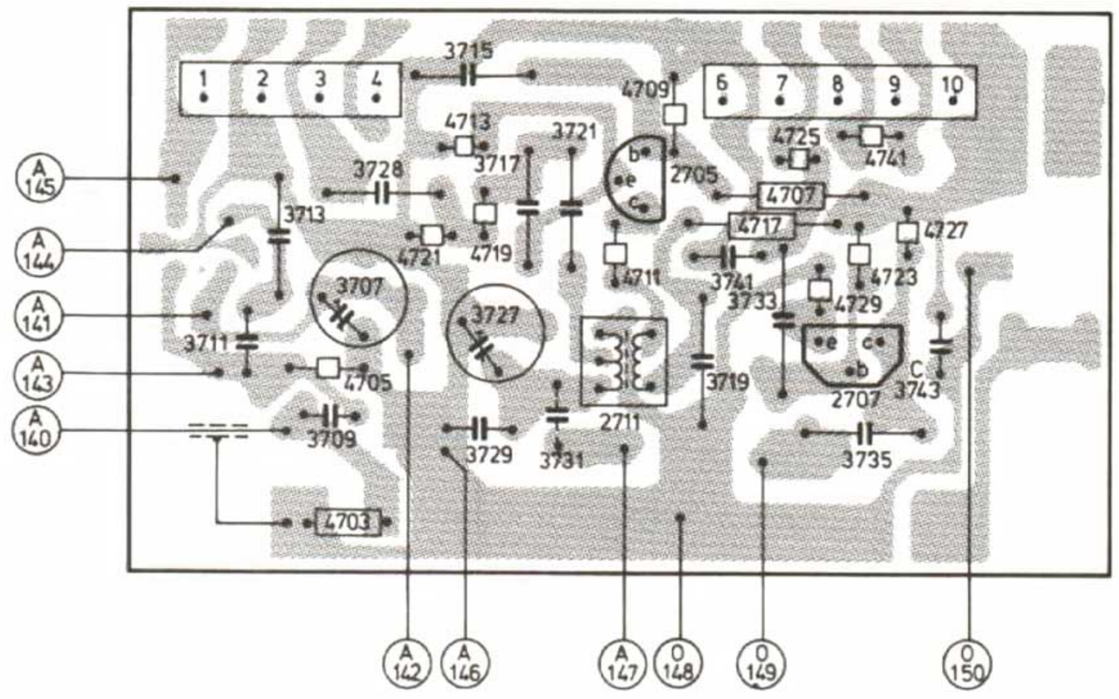

CARBON RESISTOR E24 SERIES 0.125W 5%

CARBON RESISTOR E12 SERIES 0.5W 5%

PLATE CERAMIC CAPACITOR

FLAT FOIL POLYESTER CAPACITOR

* MINIATURE ELECTROLYTIC CAPACITOR

* f = 25V

10912C4

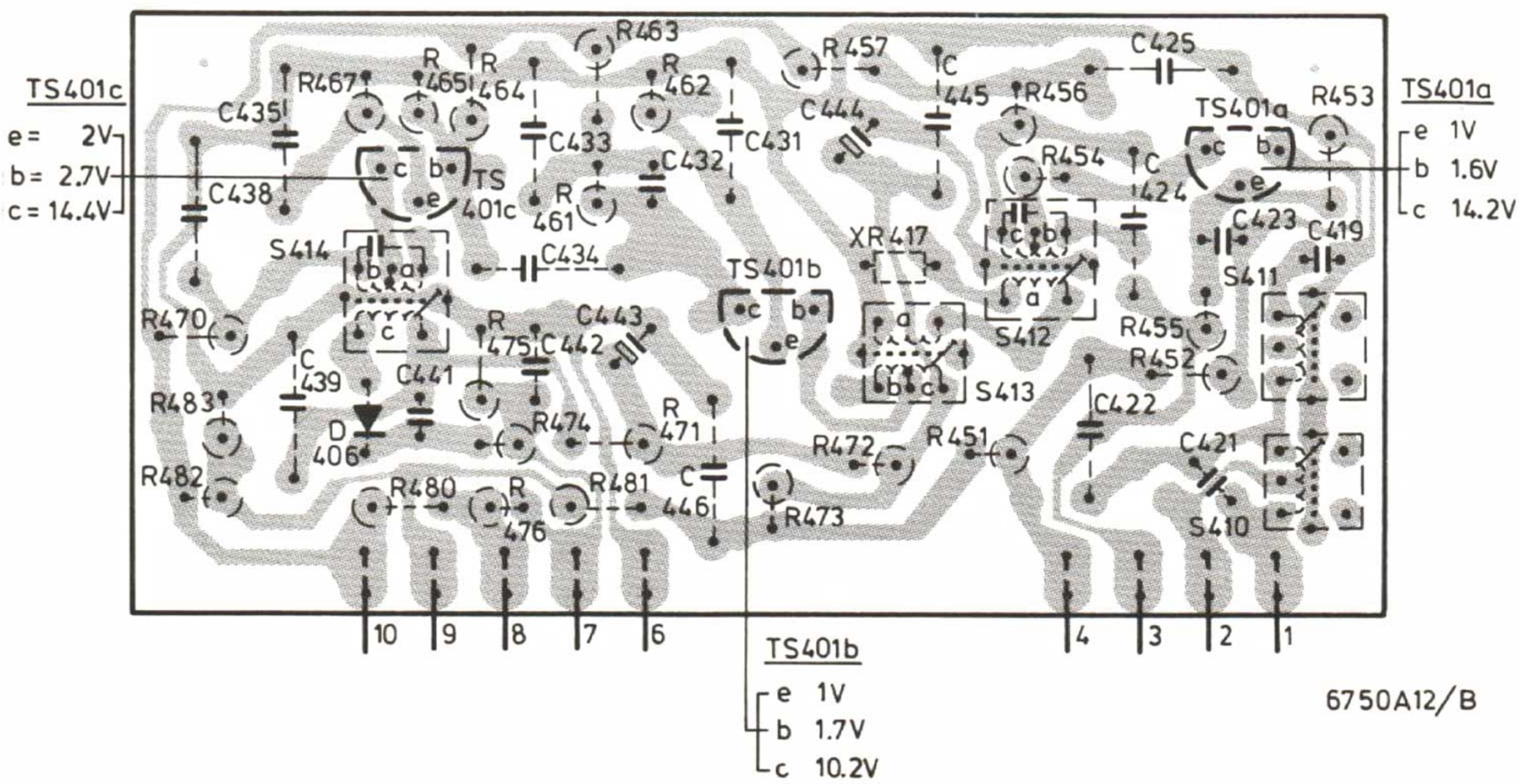


6750A12/B

www.vinylengine.com

| Wave range | | Inject | | Detune | Adjust | Indicator |
|---|---|---|---|---|---|---|
| MW 520-1650 kHz | 1 via 33 nF | A | Min. cap. | S412-413 | S414 | Max. V~on L.S. socket |
| | | | | | S413 | |
| | | | | | S412 | |
| | | B | | | S411 | Min. V~ on L.S. socket |
| | | | | | S410 | |
| LW 150-345 kHz | MW 512 kHz LW 147 kHz | C Aerial inlet | Max. cap. | | S2711 | Max. V~ on L.S. socket |
| | MW 1635 kHz LW 352 kHz | | Min. cap. | | C3727 | |
| | MW 550 kHz LW 157 kHz | | Tune in | | S5002 | |
| | MW 1500 kHz LW 336 kHz | | | | C3707 | |

GB

1 Determine the frequency of the ceramic resonator by varying the frequency of the HF-generator between 445 kHz and 470 kHz. The frequency at which the deflection of the ac-voltmeter is maximum, is the natural frequency of the resonator. This is the IF to which the set must be adjusted.

For the LW-version, the following components have been added or changed:
- Added C3723, plate cap. 27 pF ΔΔ
  C3723 is connected parallel to C3707.
- Added C3745, flat cap. 10 nF, service code number 4822 121 41134
  C3745 is located between the collector of TS2707 and chassis
- Changed C3713, flat cap. 33 nF, service code number 4822 121 41147.
- Changed C3729, plate cap. 100 pF ΔΔ
- Changed C3731, micropoco 180 pF, service code number 5322 121 54057.

F

1 Déterminer la fréquence du résonateur céramique en faisant varier la fréquence du générateur HF entre 445 kHz et 470 kHz. La fréquence à laquelle la pleine déviation est atteinte, est la propre fréquence du résonateur. Il s'agit-là de la FI à laquelle l'appareil doit être ajusté.

Pour la version G.O., les composants suivants ont été ajoutés ou modifiés:
- C3723, condens. plaquettes 22 pF ΔΔ ajouté
  C3723, branché en parallèle à C3707
- C3745, condens. plaquette, 10 nF, code 4822 121 41134 ajouté: il est monté entre le collecteur de TS2707 et la masse
- C3713, condens. plaquette, 33 nF, code 4822 121 41147
- C3729, condens. plaquette, 100 pF ΔΔ
- C3731, condens. micropoco, 180 pF, code 5322 121 54057.

NL

1 Bepaal de frekwentie van de keramische resonator, door de HF-generator te variëren tussen 445 kHz en 470 kHz. De frekwentie waarbij de uitslag van de meter maximaal is, is dan ook de MF waarop wordt afgeregeld.

D

1 Bestimme die Frequenz des keramischen Resonators durch Variieren des HF-Generators zwischen 445 kHz und 470 kHz. Die Frequenz, bei der der Messerausschlag maximal ist, ist die Eigenfrequenz des Resonators. Dies ist die ZF auf die justiert wird.



www.vinylengine.com

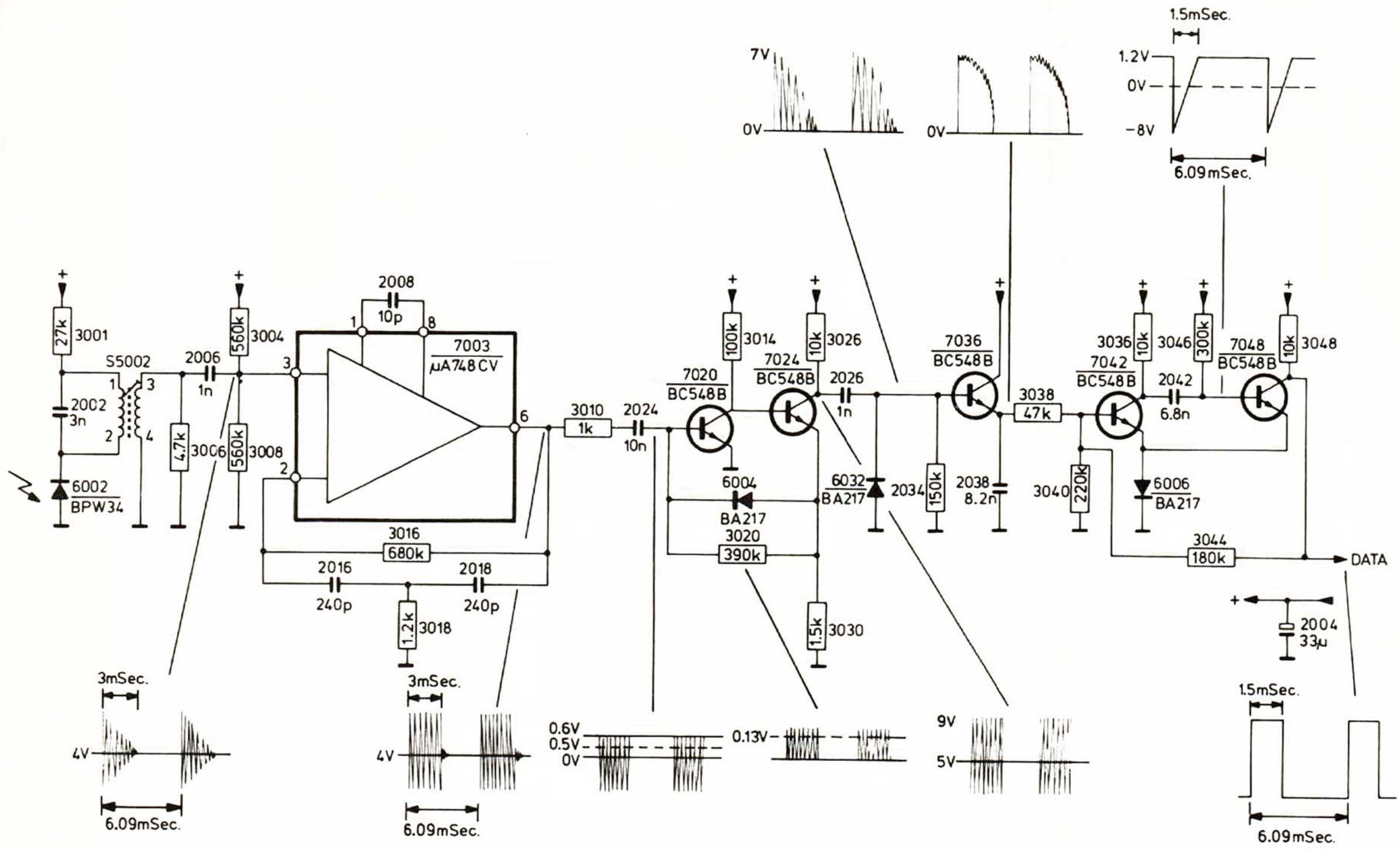


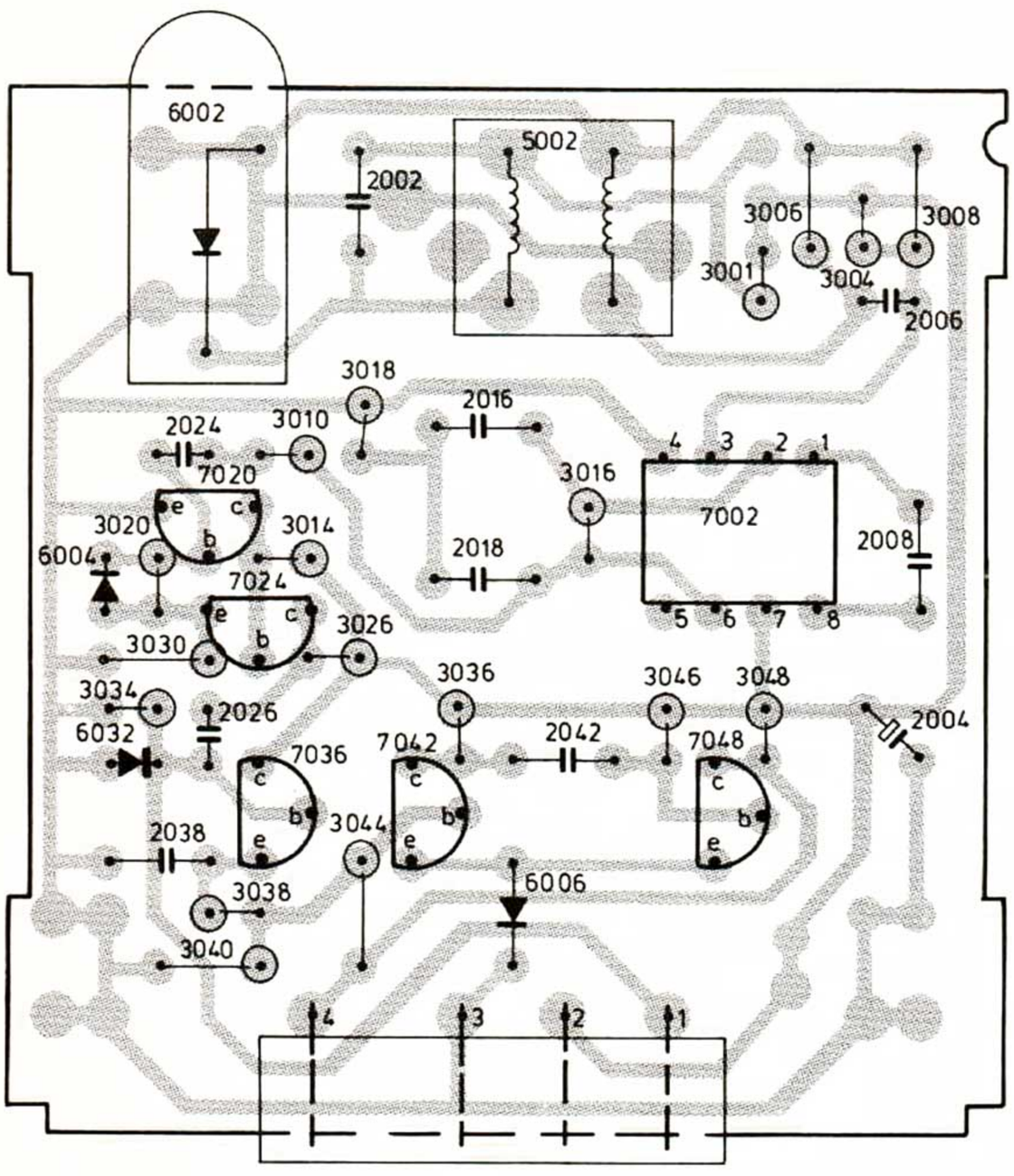


13693B2

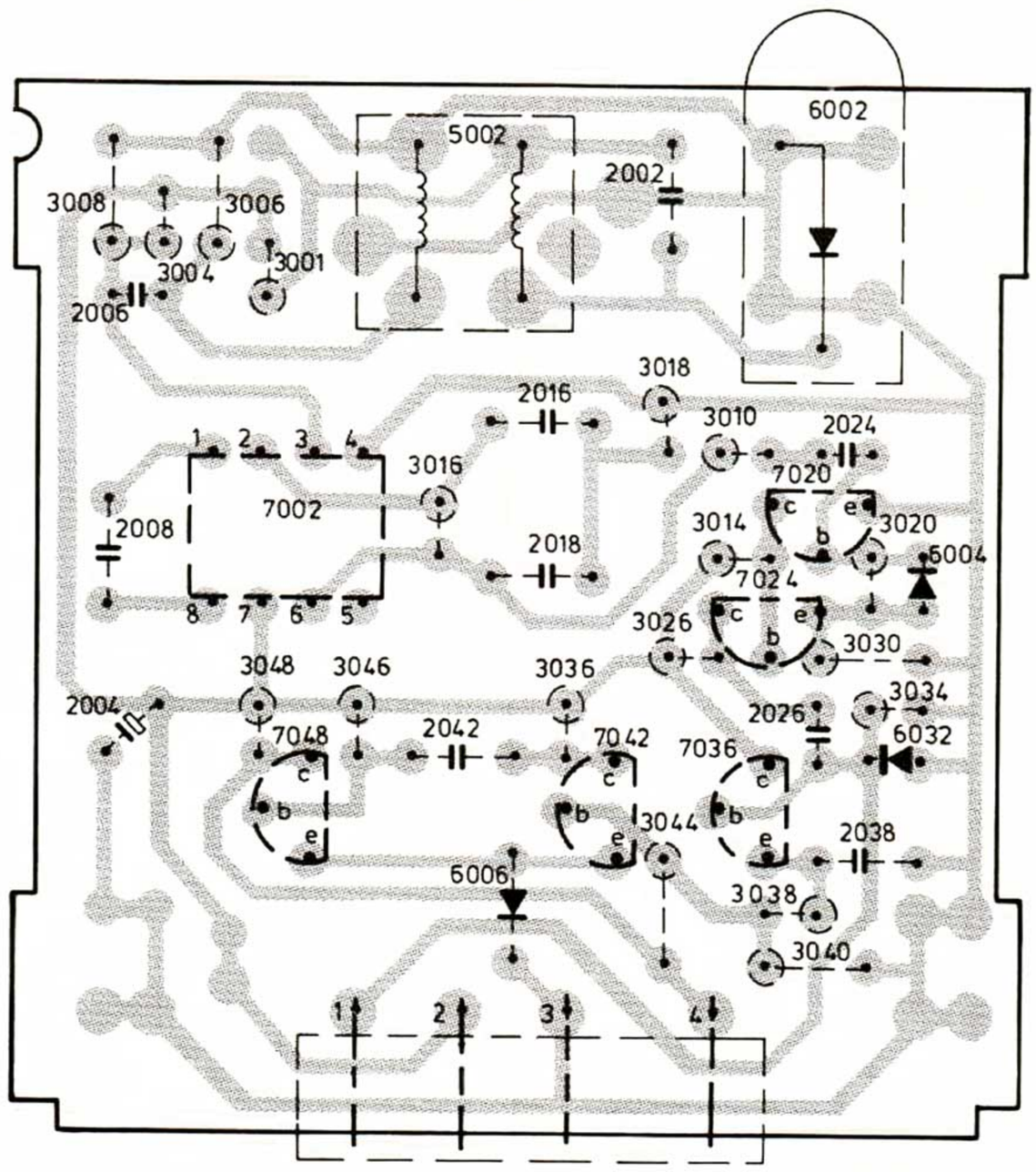


13694B2



www.vinylengine.com

| | | | | | | | | | | | | | | | | | | | | | | | | |
|---|---|---|---|---|---|---|---|---|---|---|---|---|---|---|---|---|---|---|---|---|---|---|---|---|
| M | | | | 7501 | | 7505 | 7509 | 7503 | 7507 | | 7515 | 7513 | 7511 | 7517 | 7519 | 7523 | 7521 | | | | | | | M |
| M | | | | 7502 | | 7506 | 7510 | 7504 | 7508 | | 7516 | 7514 | 7512 | 7518 | 7520 | 7524 | 7522 | | | | | | | M |
| C | 2501 | 2503 | | | | | | | | 2505 | 2509 | 2507 | 2511 | | | | | 2513 | | | | | | C |
| C | 2502 | 2504 | | | | | | | | 2506 | 2510 | 2508 | 2512 | | | | | 2514 | | | | | | C |
| R | 3501 | | 3503 | 3505 | 3511 | 3509 | 3507 | 3513 | 3515 | 3517 | 3519 | 3521 | 3523 | 3529 | 3531 | 3533 | 3527 | 3535 | 3551 | 3525 | 3545 | 3539 | 3543 | 3541 | 3549 | 3411 | 3413 | R |
| R | 3502 | | 3504 | 3506 | 3512 | 3510 | 3508 | 3514 | 3516 | 3518 | 3520 | 3522 | 3524 | 3530 | 3532 | 3534 | 3528 | 3536 | 3552 | 3526 | 3546 | 3540 | 3544 | 3542 | 3550 | 3410 | 3412 | R |

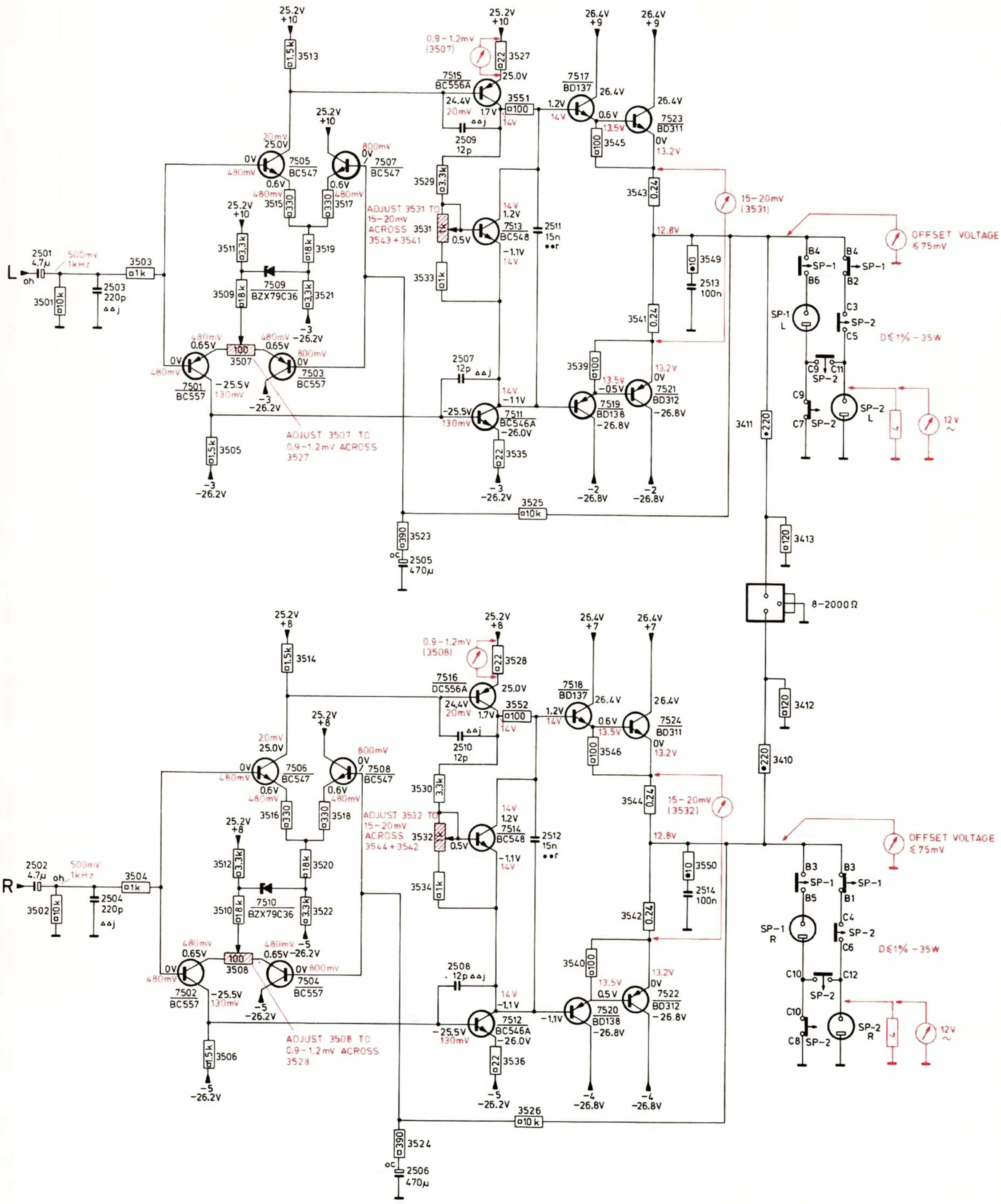

| | |
|---|---|
| MISC | 7841 7837 7839 7843 1801 7806 7805 7803 7804 7802 7801 7181.7145.7127.7117.7179.7177.7143.7115.7121.7175.7119.7173.7141.7113.7171.7123.7169.7139.7111.7167.7165.7137.7109.7163.7125.7161.7135.7159.7107.7157.7133.7129.1101.7155.7105.7131.7153.7151.7103.7147.7149 |
| MISC | 7905.7906.7901 7907.7902 7908 4901 7903 7910.7904 4902 4903 7909 1103. 7815 7845 7847 7101 7605 7807.7808.7606.7811 ··· 7814. 7817 ··· 7819 7823 ··· 7831 7601 7809 7821.7833.7609.7603 |
| S | 5901 ··· 5904 5905 ··· 5908 5917 5916 5601 |
| C | 2831 2816 2841.2814 2813. 2815.2811.2809. 2812.2810. 2803 ··· 2808 2801.2802 2105 2101 2103 2609.2615 2613 |
| C | 2901 ·· 2908.2911.2910 2912 ··· 2921 2923 ··· 2928 2940.2966. 2941 2964 ··· 2959.2955.2958.2951.2968.2956.2965 2833 2837.2839 2835.2817 2818.2625 ··· 2632.2819 2820.2601 2607.2603 2605 2823.2621 ·· 2624.2825.2617.2829.2827.2619.2611 |
| R | 3027 3025 3023.3001.3013.3031.3029.3011.3021.3033.3035.3037.3009.3017.3015.3019 3145.3141 3153.3137.3151.3159. 3133. 3157.3155 3165 3129.3169.3161.3163.3167.3125.3171 3127.3121.3123.3119.3115.3117.3147.3173.3149 |
| R | 3287.3867. 3869 3823 ··· 3833.3883.3884 3810 ··· 3822 3804 ··· 3809 3801 ··· 3803 3179.3175.3177 3105.3103.3101 3143 3107.3109.3181.3143.3139.3135.3111.3113.3185.3131 3631 ··· 3643 3630.3629.3607.3605. 3609.3611.3623.3613.3621.3615.3619.3617 |
| R | 3901 ··· 3906. 3914.3917.3907 ··· 3909.3920.3918.3916.3915.3910 ··· 3913.3934.3935.3922 ··· 3926.3928 ··· 3933 3871 3873.3875.3877 3849 3861.3862.3835 - 3843.3864.3858.3857.3845.3863.3603.3601.3844.3853.3879.3851.3847.3855.3885.3865.3859.3625 - 3628 |

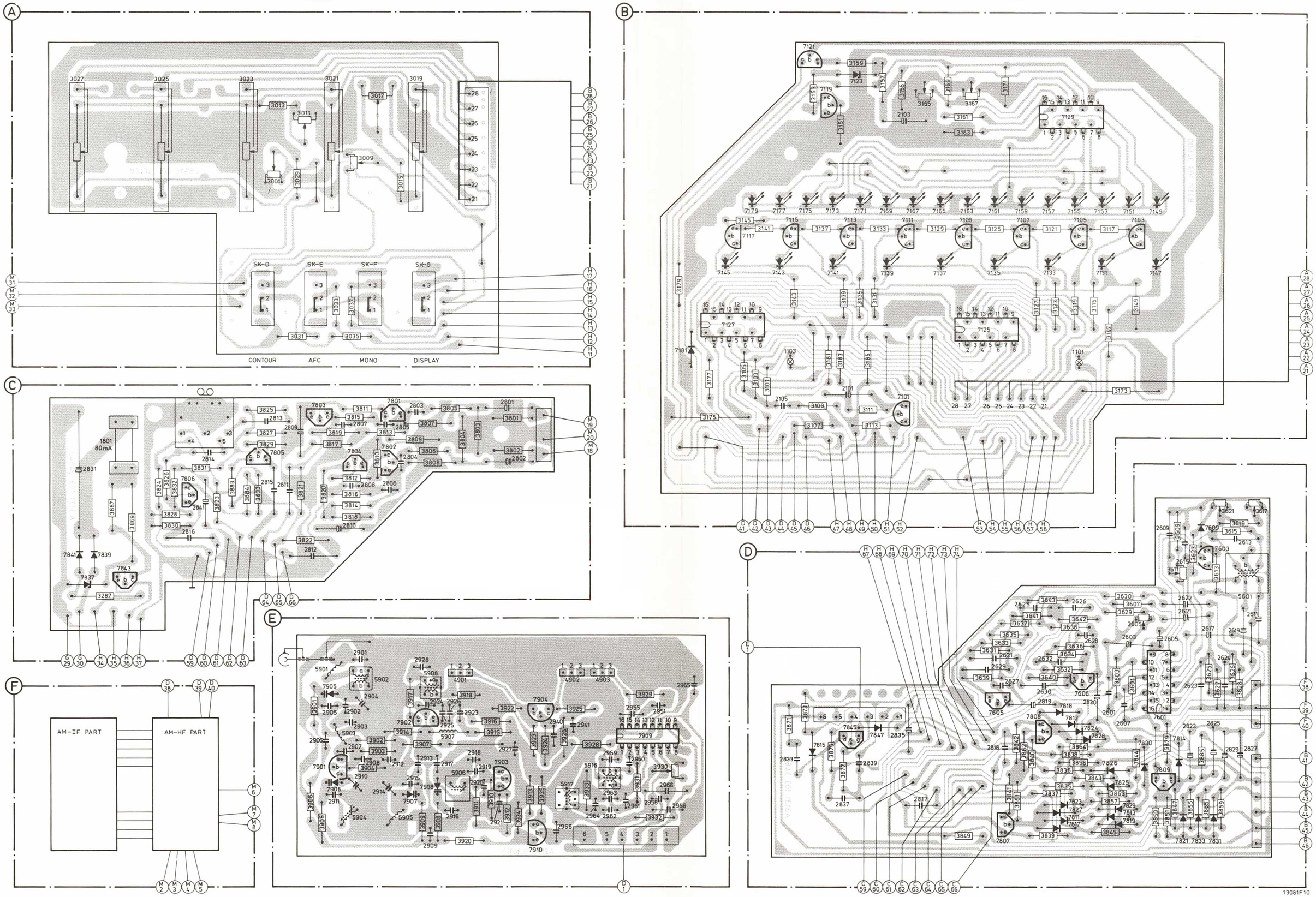




13081F10

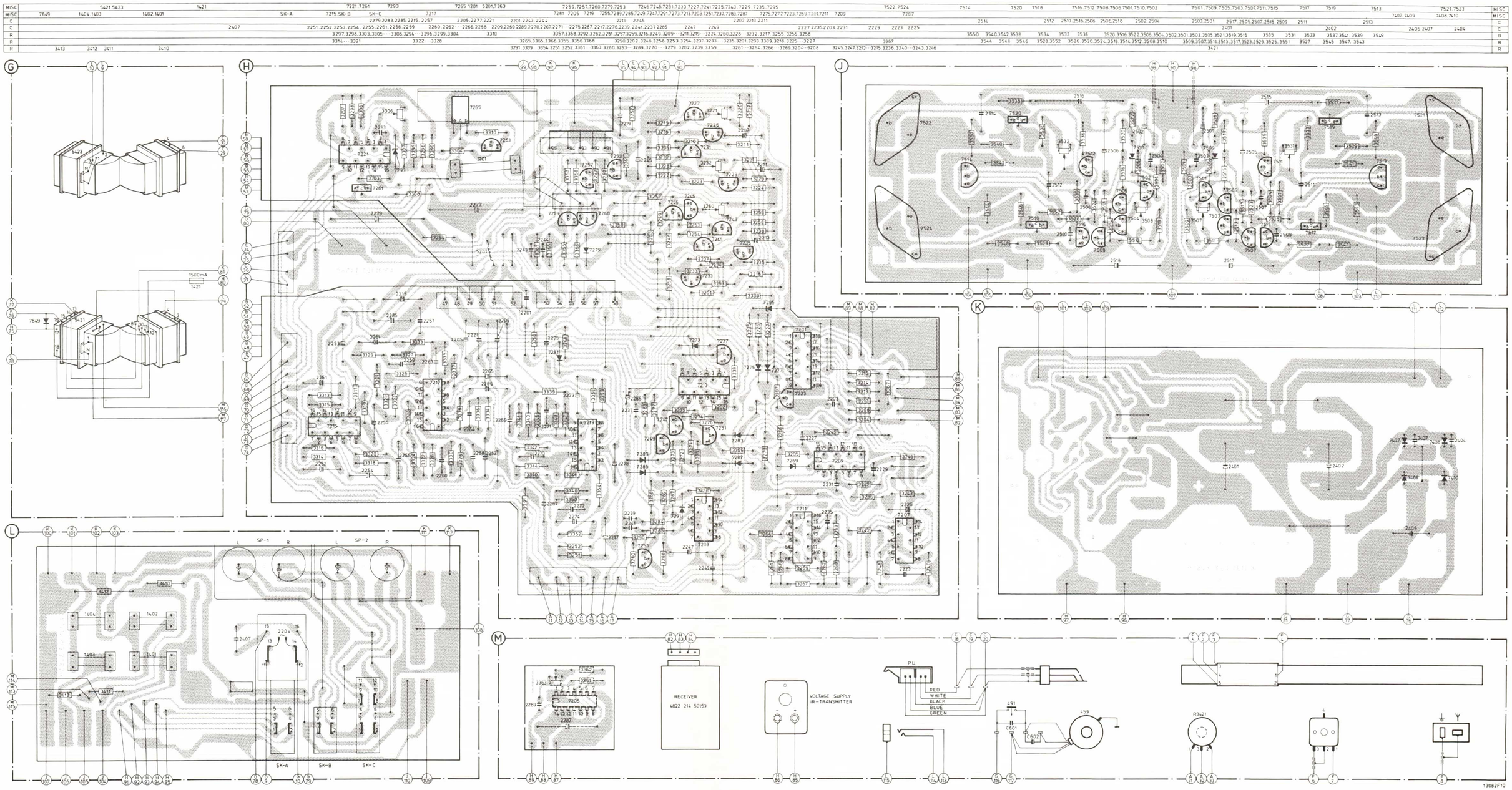
G
H
J
K
L
M
SP-1
SP-2
SK-A
SK-B
SK-C
220V
1500mA
RECEIVER
4822 214 50159
VOLTAGE SUPPLY
IR-TRANSMITTER
P.U.
RED
WHITE
BLACK
BLUE
GREEN
13082F10

| | |
|---|---|
| 401 | 4822 426 60128 |
| 402 | 4822 426 40133 |
| 403 | 4822 459 50231 |
| 404 | 4822 522 31256 |
| 405 | 4822 492 51172 |
| 406 | 4822 522 20158 |
| 407 | 4822 522 20159 |
| 408 | 4822 277 20275 |
| 409 | 4822 522 31208 |
| 411 | 4822 333 50547* |
| 412 | 4822 268 40092 |
| 413 | 4822 158 60376** |
| 414 | 4822 462 40326 |
| 416 | 4822 426 60127 |
| 417 | 4822 256 30139 |
| 418 | 4822 264 40023 |
| 419 | 4822 267 40209 |
| 421 | 4822 267 30123 |
| 422 | 4822 255 30068 |
| 423 | 4822 134 40257 |
| 424 | 4822 264 30011 |
| 426 | 4822 459 40332 |
| 427 | 4822 426 60129 |
| 428 | 4822 410 21472 |
| 429 | 4822 417 10631 |
| 431 | 4822 426 20019 |
| 432 | 4822 267 20172 |
| 433 | 4822 214 50159 |
| 434 | 4822 276 30242 |
| 436 | 4822 267 30292 |
| 437 | 5322 466 90433 |
| 438 | 4822 264 30041 |
| 439 | 4822 426 50229 |

For /29
* 4822 334 40165
** 4822 158 30186

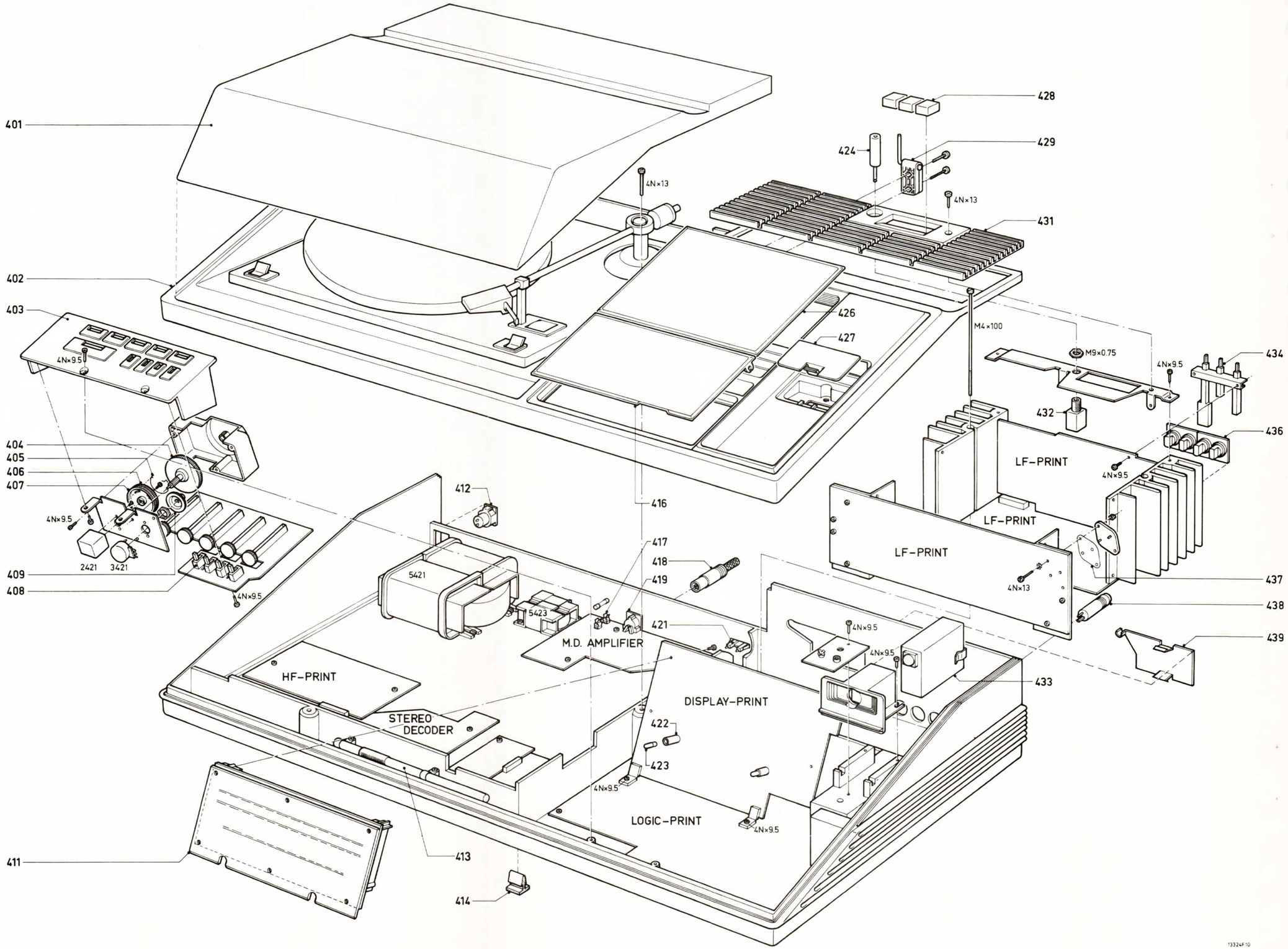

## LOGIC PRINT

| | | |
|---|---|---|
| 7201 | SAF1032p | 4822 209 10008 |
| 7203 | HEF4025p | 5322 209 14052 |
| 7207 | HEF4023p | 5322 209 14065 |
| 7209 | HEF4042 | 5322 209 14071 |
| 7211 | HEF4029 | 5322 209 14057 |
| 7213 | HEF4051p | 5322 209 14212 |
| 7215...7219 | TCA740 | 4822 209 80371 |
| 7221 | TCA750 | 4822 209 80367 |
| 7223 | BC548C | 5322 130 44196 |
| 7225 | BC547 | 5322 130 44257 |
| 7227 | BC557 | 5322 130 44256 |
| 7229 | BC547 | 5322 130 44257 |
| 7231 | BC557 | 5322 130 44256 |
| 7233 | BC548 | 4822 130 40938 |
| 7235 | BC547 | 5322 130 44257 |
| 7237 | BC558 | 4822 130 40941 |
| 7239 | BC548 | 4822 130 40938 |
| 7241 | BC557 | 5322 130 44256 |
| 7243...7246 | BC558 | 4822 130 40941 |
| 7247...7255 | BC548 | 4822 130 40938 |
| 7257...7260 | BC548C | 5322 130 44196 |
| 7261 | BD137 | 5322 130 40664 |
| 7263 | BC548B | 4822 130 40937 |
| 7265 | BD233 | 5322 130 44281 |
| 7269 | BZX79/C7V6 | 5322 130 30666 |
| 7273...7291 | BZV38 | 4822 130 30947 |
| 7295 | BZX79/B9V1 | 4822 130 30862 |

| | | |
|---|---|---|
| 5201 | Coil 5.5 μH | 4822 158 10107 |

| | | |
|---|---|---|
| 3221-3231 | Trim potm. 4.7 kΩ | 4822 100 10036 |
| 3250 | MR25 12 kΩ | 5322 116 50572 |
| 3251 | MR25 820 kΩ | 5322 116 54541 |
| 3255 | MR25 5.6 kΩ | 5322 116 54011 |
| 3256 | MR25 1 kΩ | 5322 116 54549 |
| 3258 | MR25 12 kΩ | 5322 116 50572 |
| 3260 | Trim potm. 4.7 kΩ | 4822 100 10036 |
| 3295 | MR25 1.3 kΩ | 5322 116 50526 |
| 3298 | MR25 2.2 kΩ | 5322 116 54574 |
| 3299 | MR25 8.2 kΩ | 5322 116 54558 |
| 3306 | Trim potm. 2.2 kΩ | 4822 100 10029 |

## DISPLAY PRINT

| | | |
|---|---|---|
| 7101 | BC547B | 4822 130 40959 |
| 7103...7117 | BC558 | 4822 130 40941 |
| 7119 | BC548B | 4822 130 40937 |
| 7121 | BC547C | 5322 209 84493 |
| 7123 | BZX79/B5V6 | 5322 130 34173 |
| 7125 | SN29771/AN | 4822 209 80347 |
| 7127 | SN29770/AN | 4822 209 80346 |
| 7129 | UAA170 | 4822 209 80312 |
| 7131...79 | CQY54 | 4822 130 30914 |
| 7147 | CQY95 | 4822 130 30923 |

| | | |
|---|---|---|
| 3165 | Trim potm. 22 kΩ | 4822 100 10086 |
| 3167 | Trim potm. 10 kΩ | 4822 100 10024 |

## PRESET PRINT

| | | |
|---|---|---|
| 3001 | Trimpotm. 22 kΩ | 4822 100 10051 |
| 3009 | Trimpotm. 10 kΩ | 4822 100 10035 |
| 3011 | Trimpotm. 330 Ω | 5322 101 14111 |
| 3017 | Trimpotm. 4.7 kΩ | 4822 101 10026 |
| 3019...3027 | Preset potm. 22 kΩ | 4822 101 90082 |

## AMPLIFIER

| | | |
|---|---|---|
| 7501...7504 | BC557 | 5322 130 44256 |
| 7505...7508 | BC547 | 5322 130 44257 |
| 7509...7510 | BZX79/C36 | 5322 130 34098 |
| 7511-7512 | BC546A | 4822 130 41067 |
| 7513-7514 | BC548 | 4822 130 40938 |
| 7515-7516 | BC556a | 5322 130 44462 |
| 7517-7518 | BD137 | 5322 130 40664 |
| 7519-7520 | BD138 | 5322 130 40665 |
| 7521-7522 | BD312 | 4822 130 41083 |
| 7523-7524 | BD311 | 4822 130 41082 |
| 7407-7408 | BYX71 | 4822 130 30865 |
| 7409-7410 | BYX71R | 5322 130 34275 |

| | | |
|---|---|---|
| 2513-2514 | Polyester cap. 100 nF 100 V | 4822 121 40334 |
| 2403-2405 | Cer. cap. 10 nF 500 V | 4822 120 21134 |
| 2466 | Polyester cap. 100 nF 100 V | 4822 121 40334 |

| | | |
|---|---|---|
| 3507-3508 | Trim potm. 100 Ω | 4822 100 10075 |
| 3531-3532 | Trim potm. 1 kΩ | 4822 100 10037 |
| 3541...3544 | Wire res. 0.24 Ω 2 W | 4822 113 60118 |

## MISCELLANEOUS

| | | |
|---|---|---|
| 1801 | Fuse 80 mA | 4822 253 20005 |
| 1101-1103 | Lamp 14 V - 0.08 A | 4822 134 40257 |
| 1401-1404 | Fuse 2.5 A | 4822 253 20024 |
| 2407 | Rifa cap. 4700 pF | 4822 121 40298 |
| 1421 | Fuse 0.5 AT | 4822 253 30017 |
| 2401-2402 | Elco 6800 μF - 40 V | 4822 124 40153 |
| 2421 | Gang. cap. 2 x 335 pF | 4822 125 20184 |
| 3421 | Tuning potm. 100 kΩ lin. | 4822 101 80037 |
| 5421 | Mains trafo | 4822 146 60084 |
| 5421/29 | Mains trafo | 4822 146 60086 |
| 5423 | Memory trafo | 4822 145 30127 |
| 5425 | Ferroceptor MW | 4822 158 60376 |
| 7421 | BY206 | 4822 130 30839 |



www.vinylengine.com

**UNITS**

| | | |
|---|---|---|
| AM-IF | 452 kHz | 4822 212 40018 |
| | 460 kHz | 4822 214 50122 |
| | Infra red receiver | 4822 214 50159 |

**HF-print**

| | | |
|---|---|---|
| 7901-7903 | BF324 | 5322 130 44396 |
| 7904 | BF240 | 4822 130 40902 |
| 7905-7908 | BB110G | 5322 130 34196 |
| 7906-7907 | BB110B | 4822 130 30932 |
| 7909 | TCA420A | 4822 209 80278 |
| 7910 | BC548 | 4822 130 40938 |

| | | |
|---|---|---|
| 2904-2910<br>2914 | Trimmer 10 pF | 4822 125 50062 |

| | | |
|---|---|---|
| 4901...4903 | Ceram. filter | 4822 242 70249 |

| | | |
|---|---|---|
| 5901 | Choke | 4822 157 50835 |
| 5902 | Aerial coil | 4822 157 50896 |
| 5903 | Choke | 4822 157 50836 |
| 5904-5905 | HF-coil | 4822 157 50837 |
| 5906 | Osc. coil | 4822 157 50895 |
| 5907 | Choke | 4822 158 10138 |
| 5908-5916-<br>5917 | IF-coil Toko | 4822 156 30546 |

| | | |
|---|---|---|
| 3930 | Trim potm. 4.7 kΩ | 4822 100 10036 |

**Input selector**

| | | |
|---|---|---|
| 7601 | TDA1005 | 4822 209 80315 |
| 7603 | BC548 | 4822 130 40938 |
| 7605-7606 | BC548B | 4822 130 40937 |
| 7609 | BAW62 | 5322 130 30613 |
| 7801-7802 | BC559 | 4822 130 40963 |
| 7803...7808 | BC548B | 4822 130 40937 |
| 7809 | BC548 | 4822 130 40938 |
| 7811...7833 | 1N4148 | 5322 130 30621 |
| 7835 | BZX79/C11 | 5322 130 34488 |
| 7837 | BZX79/C10 | 5322 130 34297 |
| 7839-7841 | BY206 | 4822 130 30839 |
| 7843 | BC337 | 4822 130 40855 |
| 7845 | BF245a | 5322 130 44499 |
| 7847 | BA317 | 4822 130 30847 |

| | | |
|---|---|---|
| 2603 | Solid tand cap. 10μF-3V | 5322 124 14084 |
| 2609 | Micro poco 560 pF 1 % | 4822 121 50576 |
| 2613 | Micro poco 6800 pF 2 % | 4822 121 50538 |
| 2623-2624 | Micro poco 750 pF 5 % | 5322 121 54116 |
| 2629-2630 | Micro poco 2000 pF 5 % | 4822 121 50472 |
| 2631-2632 | Micro poco 510 pF 5 % | 5322 121 54055 |
| 2843-2845 | Pinup cap. 10 nF 20 % | 4822 120 21134 |

| | | |
|---|---|---|
| 3605 | Trim potm. 470 kΩ | 4822 100 10107 |
| 3611 | Trim potm. 4.7 kΩ | 4822 100 10036 |
| 3617 | Trim potm. 470 Ω | 4822 100 10038 |
| 3621 | Trim potm. 2.2 kΩ | 4822 100 10029 |

| | | |
|---|---|---|
| 5601 | Coil | 4822 157 50894 |

**AM-print**

| | | |
|---|---|---|
| 2705 | BF495 | 4822 130 40947 |
| 2707 | BC548 | 4822 130 40938 |
| 2709 | BZX79/C15 | 5322 130 34281 |

| | | |
|---|---|---|
| 2711 | Osc. coil MW Toko | 4822 156 30493 |
| 2711/29 | Osc. coil LW Toko | 4822 156 30494 |

| | | |
|---|---|---|
| 3707 | Trimmer 20 pF | 4822 125 50045 |
| 3711 | Micro poco 2700 pF 5 % | 5322 121 54065 |
| 3713 | Flat cap. 18000 pF 10 % | 4822 121 40314 |
| 3713/29 | Flat cap. 3300 pF 10 % | 4822 121 40411 |
| 3727 | Trimmer 20 pF | 4822 125 50045 |
| 3727/29 | Trimmer 27 pF | 4822 125 50088 |
| 3731 | Styrol cap. 305 pF | 4822 121 50579 |
| 3731/29 | Micro poco 180 pF 1 % | 4822 121 54057 |

| | | |
|---|---|---|
| 4703 | VDR | 4822 116 20073 |



www.vinylengine.com

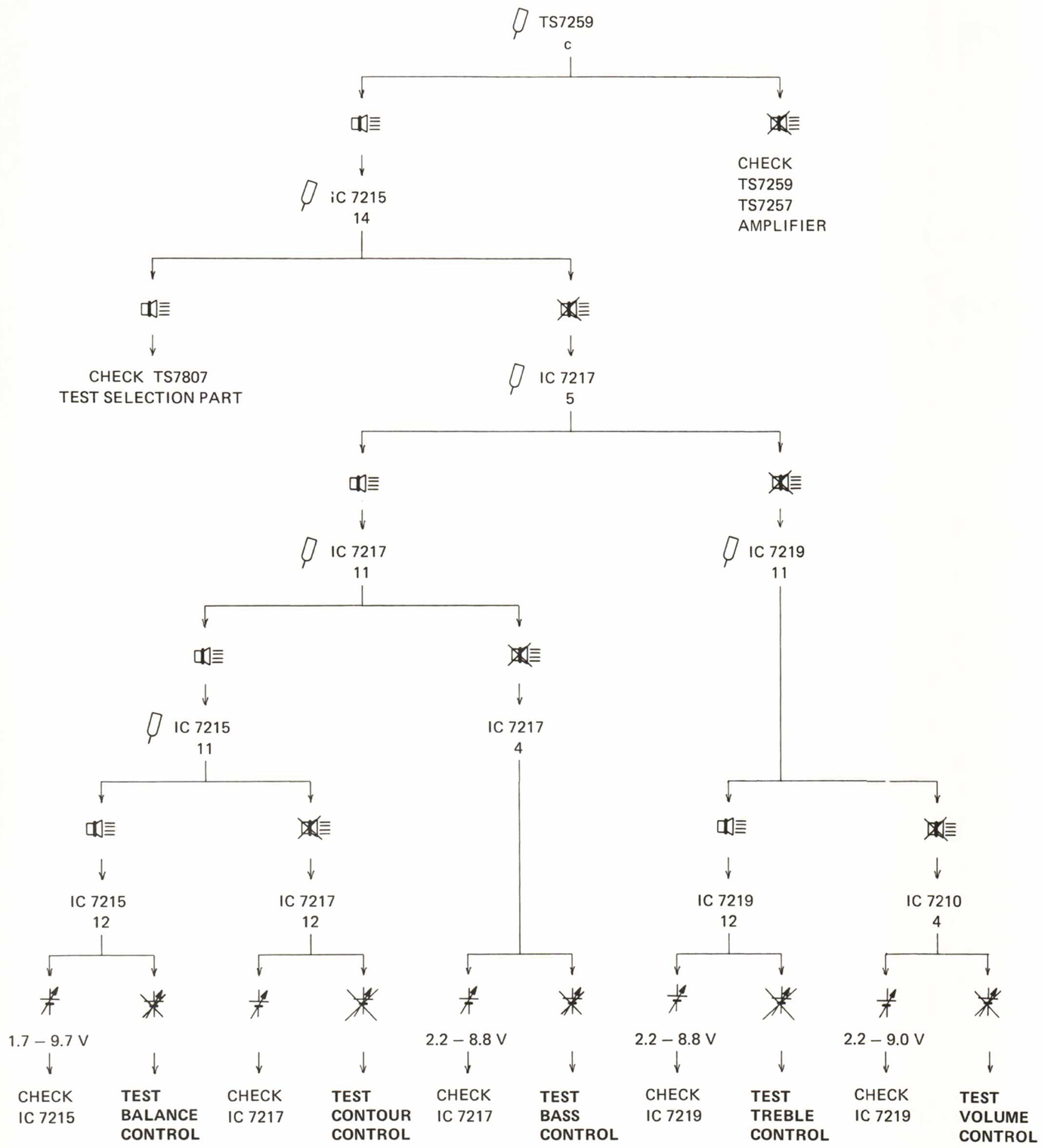
TS7259
c
CHECK
TS7259
TS7257
AMPLIFIER
IC 7215
14
CHECK TS7807
TEST SELECTION PART
IC 7217
5
IC 7217
11
IC 7219
11
IC 7215
11
IC 7217
4
IC 7215
12
IC 7217
12
IC 7219
12
IC 7210
4
1.7 – 9.7 V
2.2 – 8.8 V
2.2 – 8.8 V
2.2 – 9.0 V
CHECK
IC 7215
TEST
BALANCE
CONTROL
CHECK
IC 7217
TEST
CONTOUR
CONTROL
CHECK
IC 7217
TEST
BASS
CONTROL
CHECK
IC 7219
TEST
TREBLE
CONTROL
CHECK
IC 7219
TEST
VOLUME
CONTROL



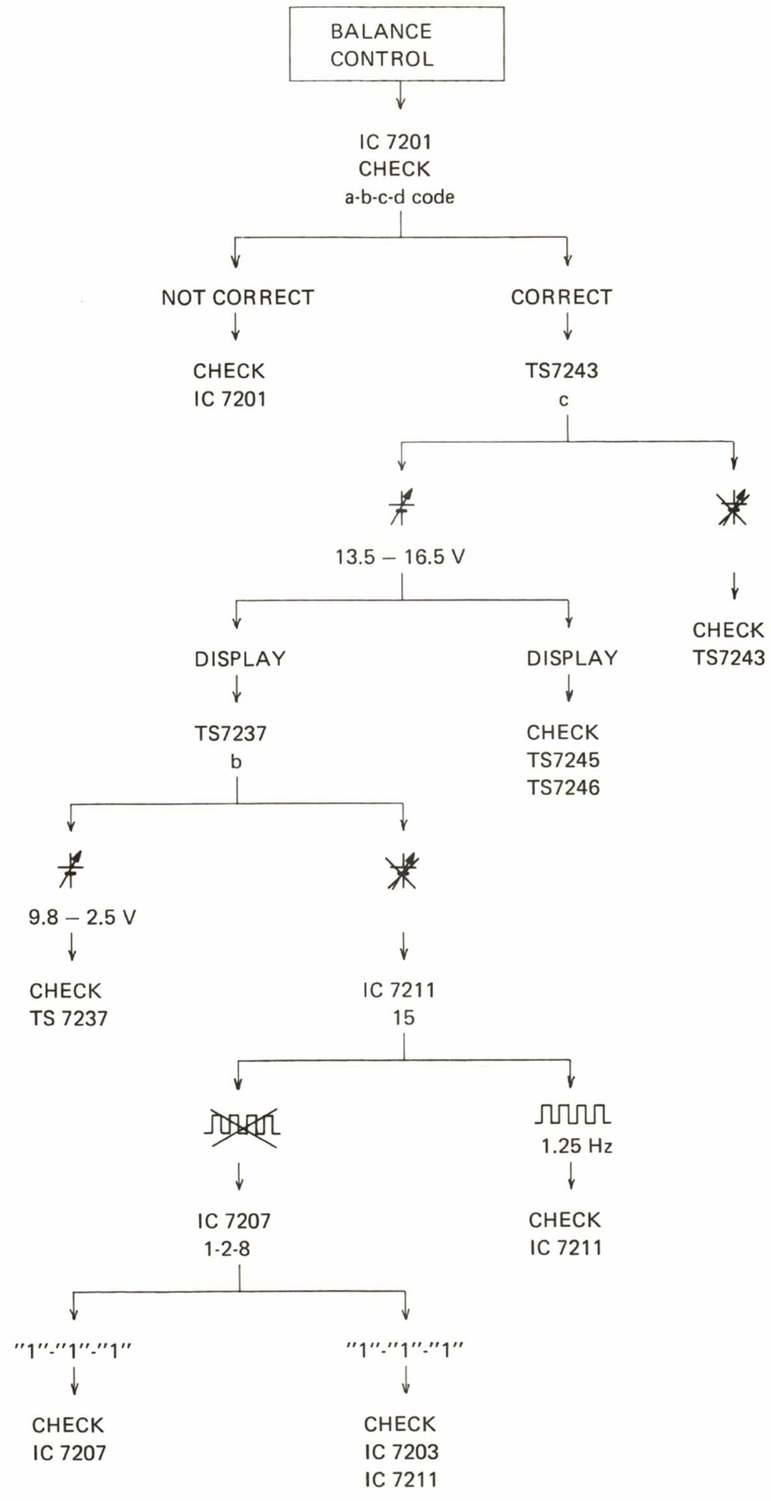
BALANCE
CONTROL
IC 7201
CHECK
a-b-c-d code
NOT CORRECT
CORRECT
CHECK
IC 7201
TS7243
c
13.5 – 16.5 V
CHECK
TS7243
DISPLAY
DISPLAY
TS7237
b
CHECK
TS7245
TS7246
9.8 – 2.5 V
CHECK
TS 7237
IC 7211
15
1.25 Hz
IC 7207
1-2-8
CHECK
IC 7211
"1"-"1"-"1"
"1"-"1"-"1"
CHECK
IC 7207
CHECK
IC 7203
IC 7211

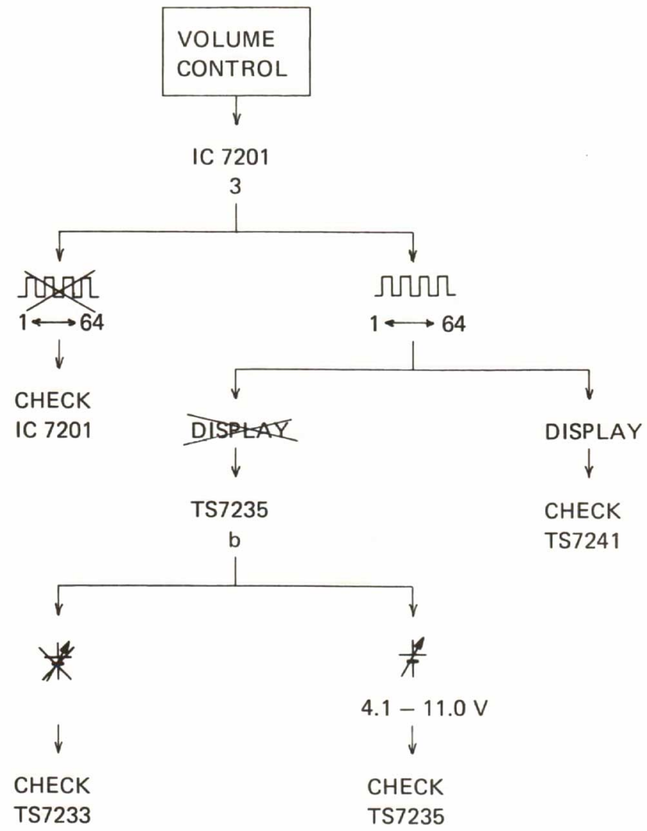
VOLUME CONTROL
IC 7201
3
1 ⟷ 64
CHECK IC 7201
1 ⟷ 64
DISPLAY
TS7235
b
DISPLAY
CHECK TS7241
4.1 – 11.0 V
CHECK TS7233
CHECK TS7235

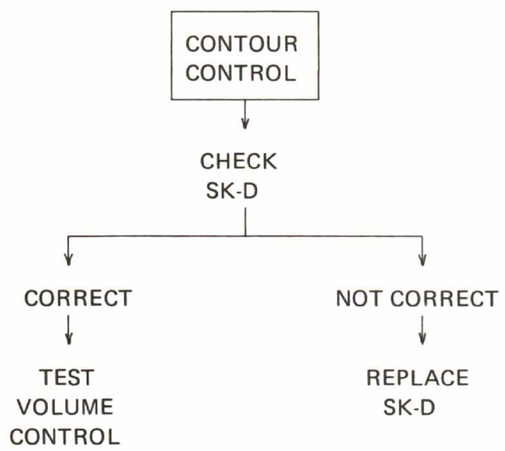
CONTOUR CONTROL
CHECK SK-D
CORRECT
NOT CORRECT
TEST VOLUME CONTROL
REPLACE SK-D



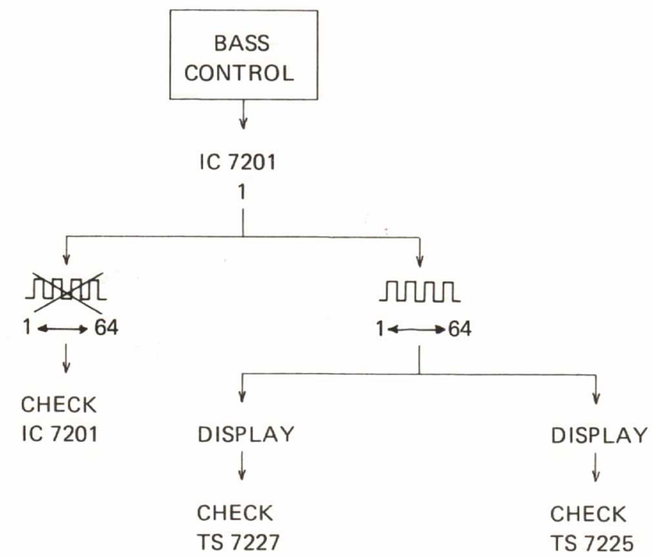
BASS CONTROL
IC 7201
1
1 ⟷ 64
CHECK IC 7201
1 ⟷ 64
DISPLAY
CHECK TS 7227
DISPLAY
CHECK TS 7225

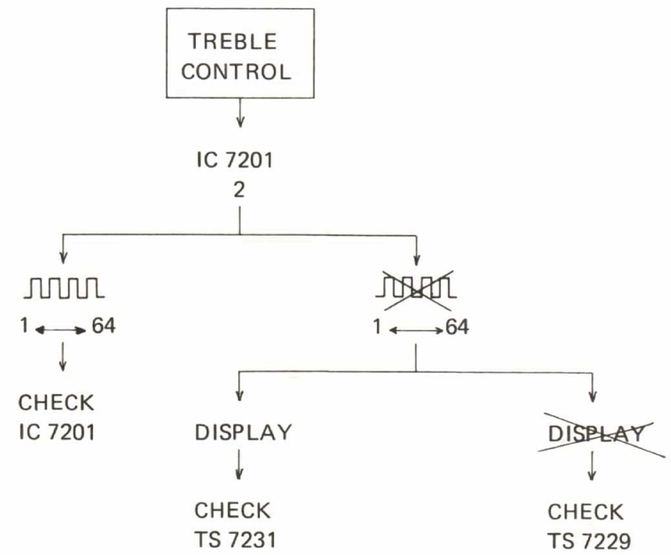
TREBLE CONTROL
IC 7201
2
1 ⟷ 64
CHECK IC 7201
1 ⟷ 64
DISPLAY
CHECK TS 7231
DISPLAY
CHECK TS 7229

## SELECTION PART

**Condition: ABC code is correct**

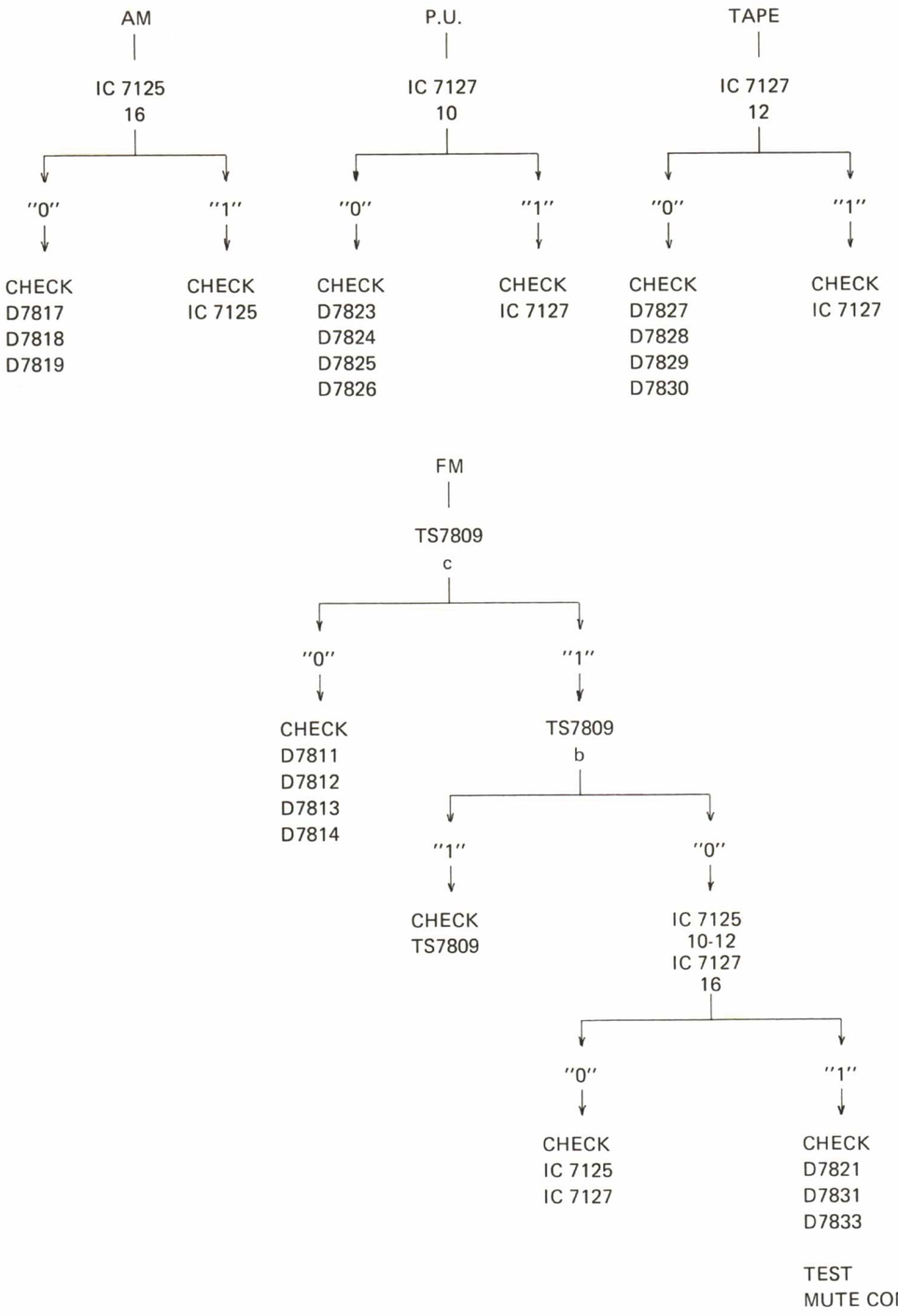




## MUTE CONTROL

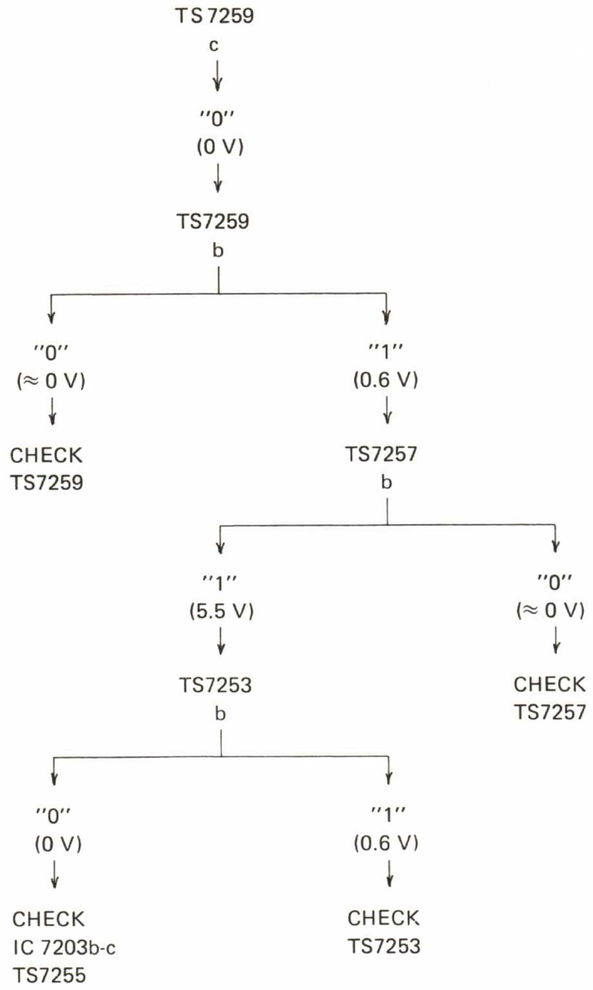

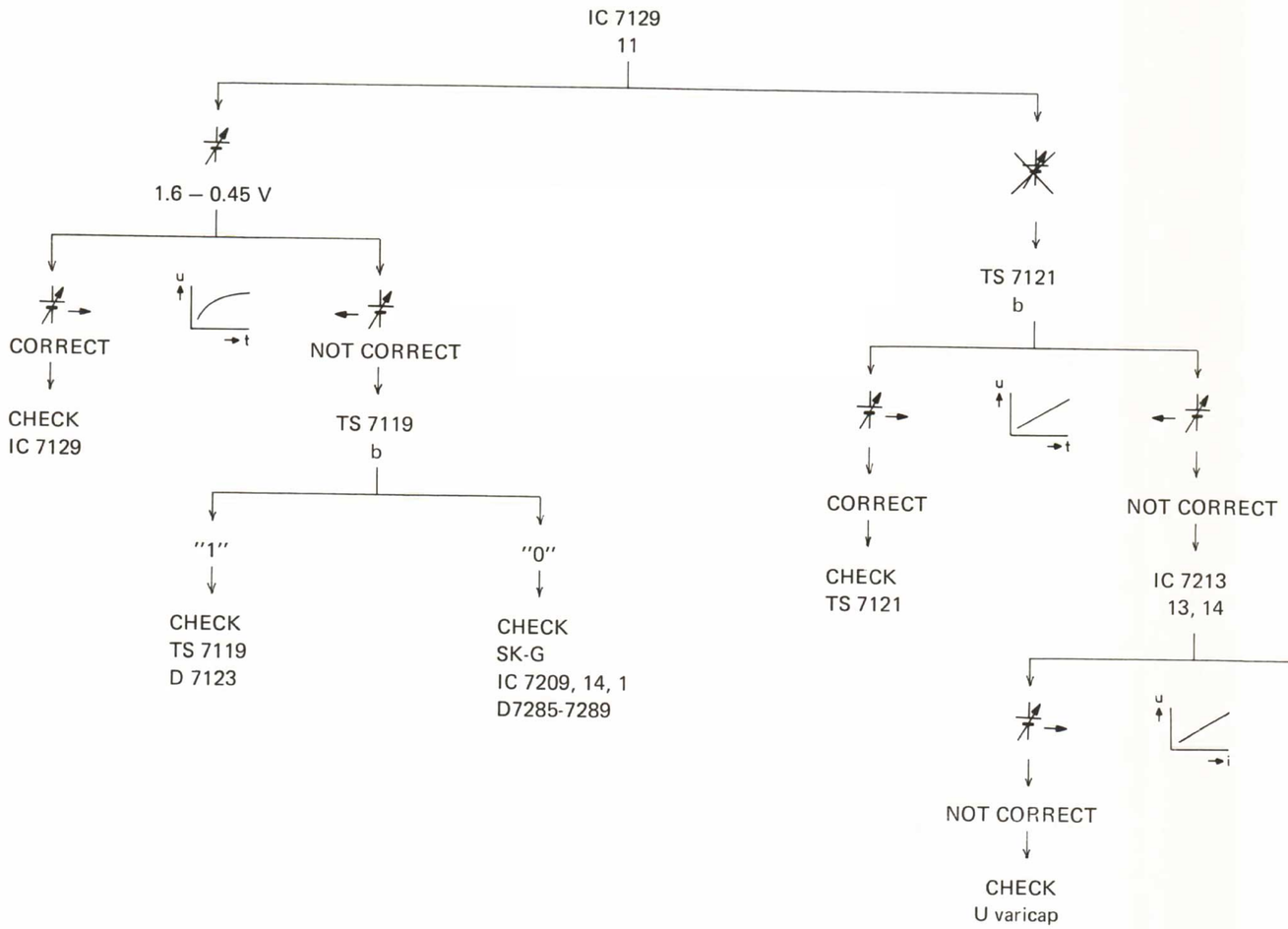
IC 7129
11
1.6 – 0.45 V
CORRECT
CHECK
IC 7129
NOT CORRECT
TS 7119
b
"1"
CHECK
TS 7119
D 7123
"0"
CHECK
SK-G
IC 7209, 14, 1
D7285-7289
TS 7121
b
CORRECT
CHECK
TS 7121
NOT CORRECT
IC 7213
13, 14
NOT CORRECT
CHECK
U varicap
CORRECT
CHECK
IC 7213
9-10-11
CODE
CORRECT
CHECK
TS 7213
CODE
NOT CORRECT
TS 7247-49-51
b
CODE
CORRECT
CHECK
TS 7247
TS 7249
TS 7251
CODE
NOT CORRECT
CHECK
IC 7209
3 - 9 - 12
CODE
CORRECT
CHECK
D 7283
D 7285
D 7287
D 7289
CODE
NOT CORRECT
CHECK
IC 7209
TS 7207-c
D 7275
D 7277



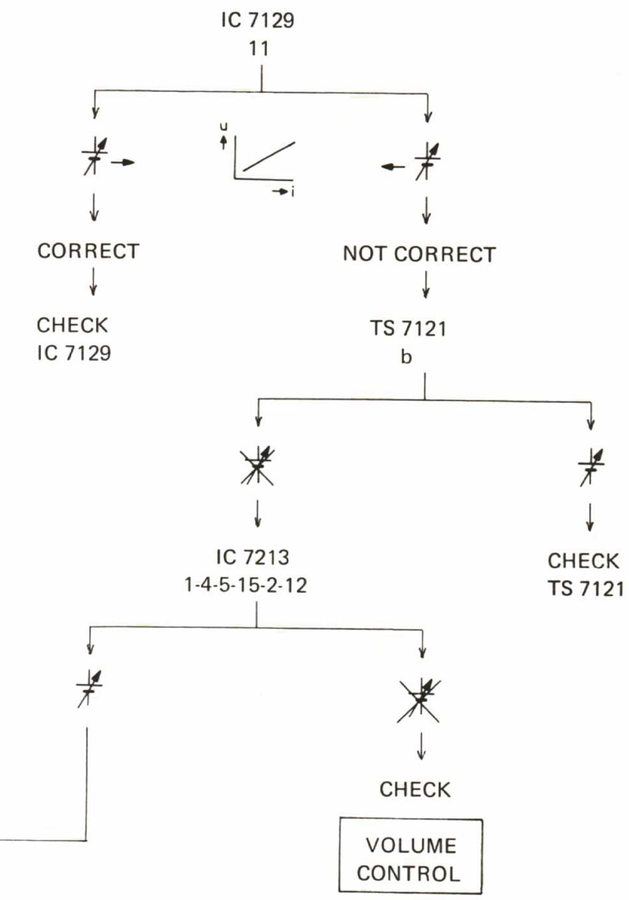
IC 7129
11
CORRECT
CHECK
IC 7129
NOT CORRECT
TS 7121
b
IC 7213
1-4-5-15-2-12
CHECK
TS 7121
CHECK
VOLUME
CONTROL

# Hi-Fi record player 22GC037/00 /55 /56/57/58/59

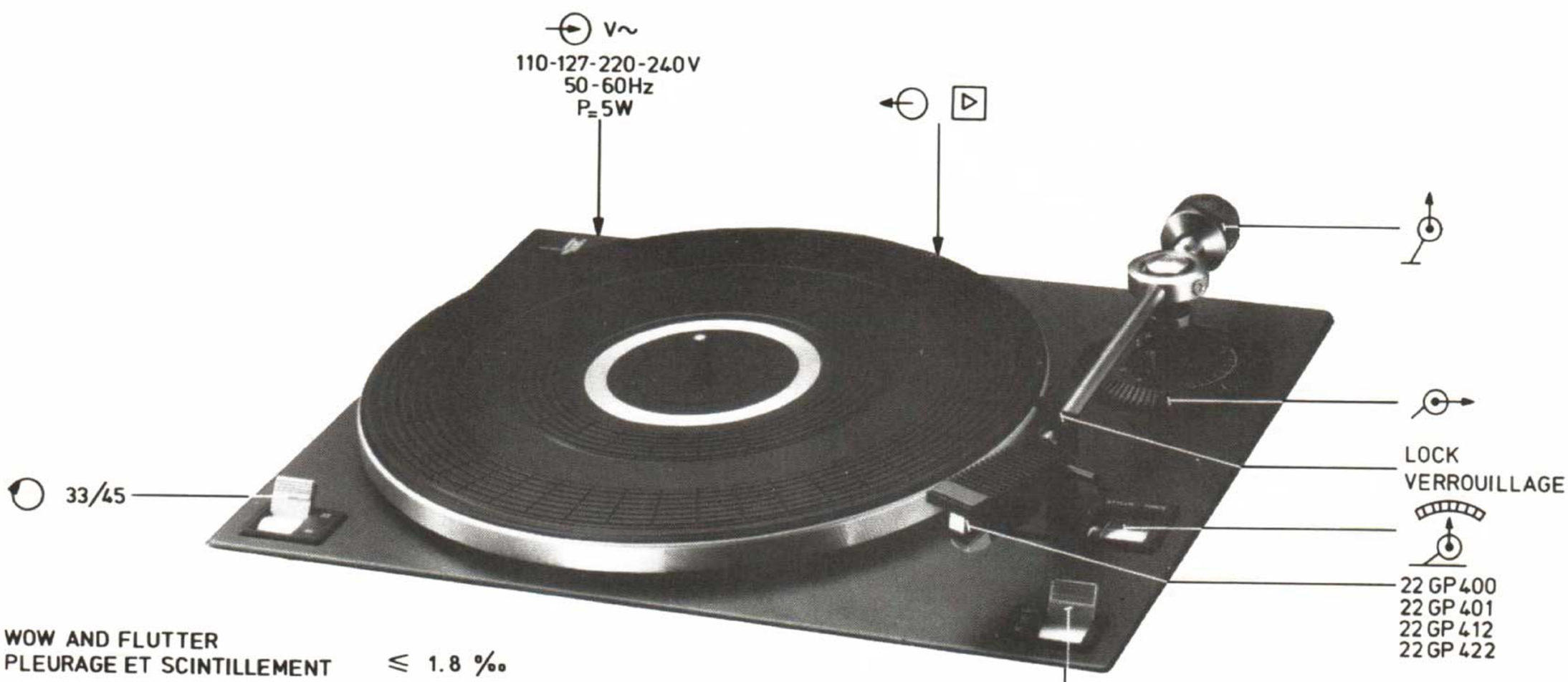


| | | |
|---|---|---|
| WOW AND FLUTTER<br>PLEURAGE ET SCINTILLEMENT | | ≤ 1.8 ‰ |
| RUMBLE<br>RONRONNEMENT | DIN. A:<br>DIN. B: | ≤ − 35 dB<br>≤ − 55 dB |
| MECHANICAL NOISE<br>BRUIT MÉCANIQUE | | ≤ 33 dB |
| DIMENSION | | 385 x 315 mm |

10991 B 10

Subject to modification

4822 726 12008

Printed in The Netherlands

www.vinylengine.com

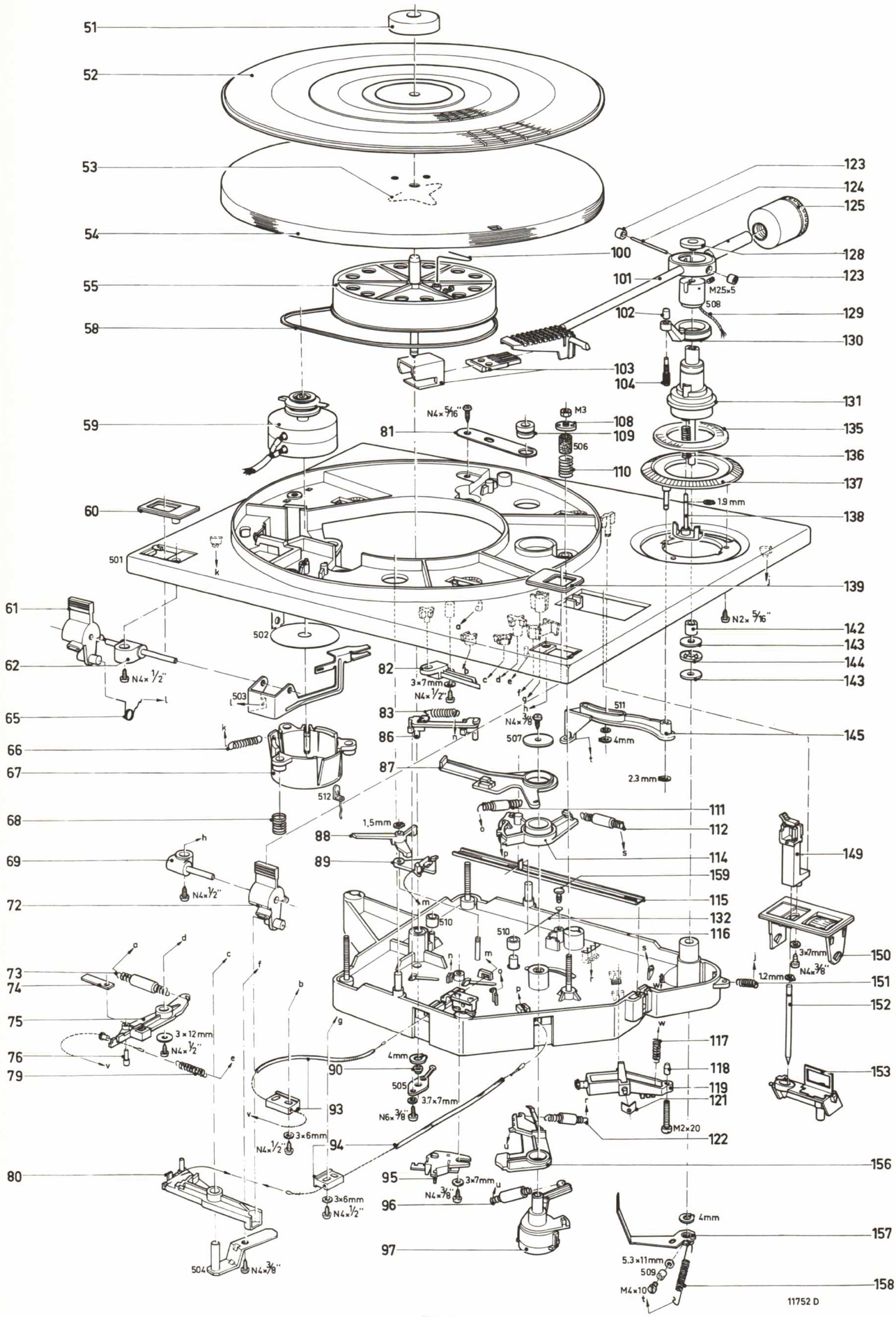


Fig.1

CS57681

## TURNTABLE HEIGT
## HAUTEUR DU PLATEAU

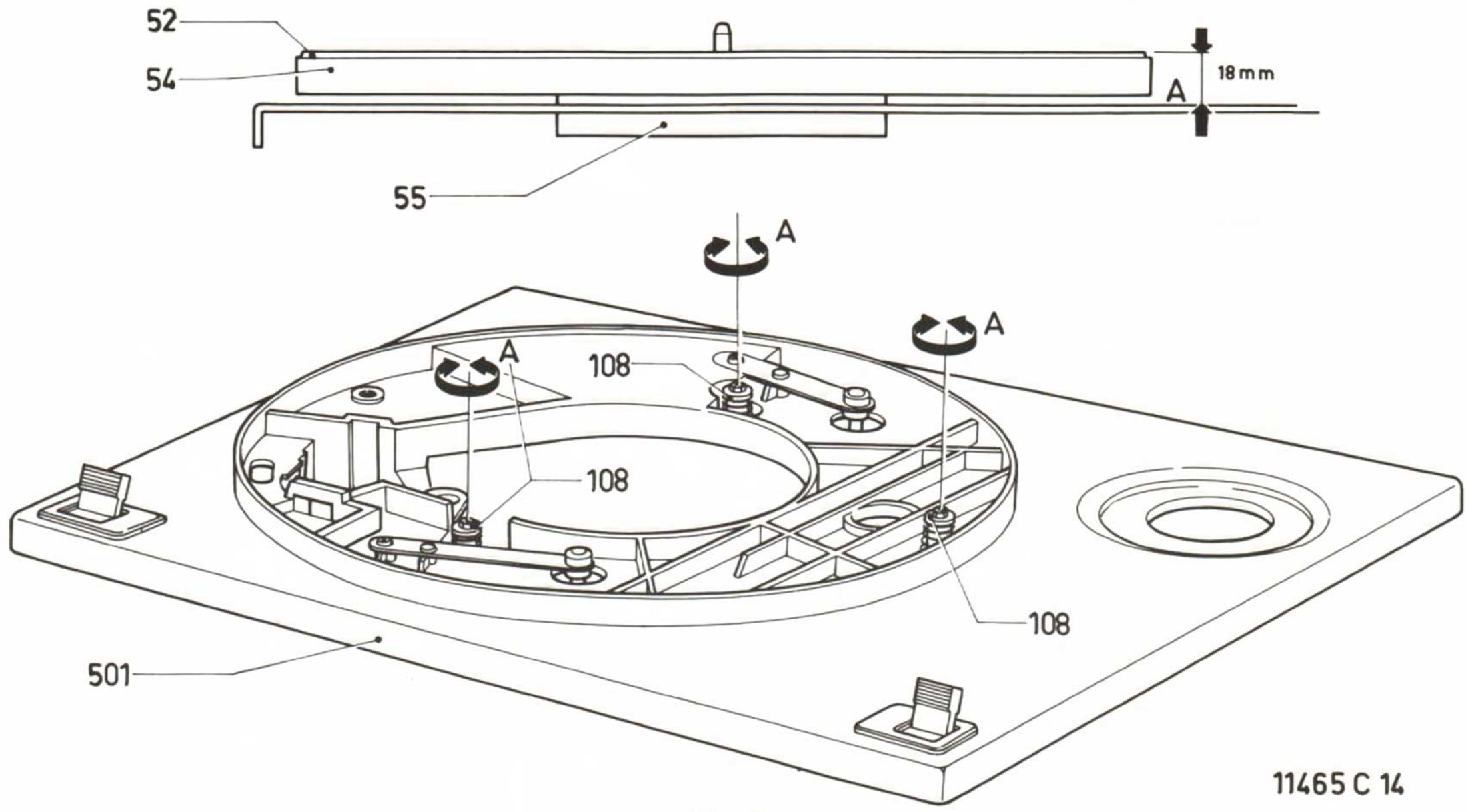


Fig. 2

## AUTOMATIC STOP
## ARRET AUTOMATIQUE

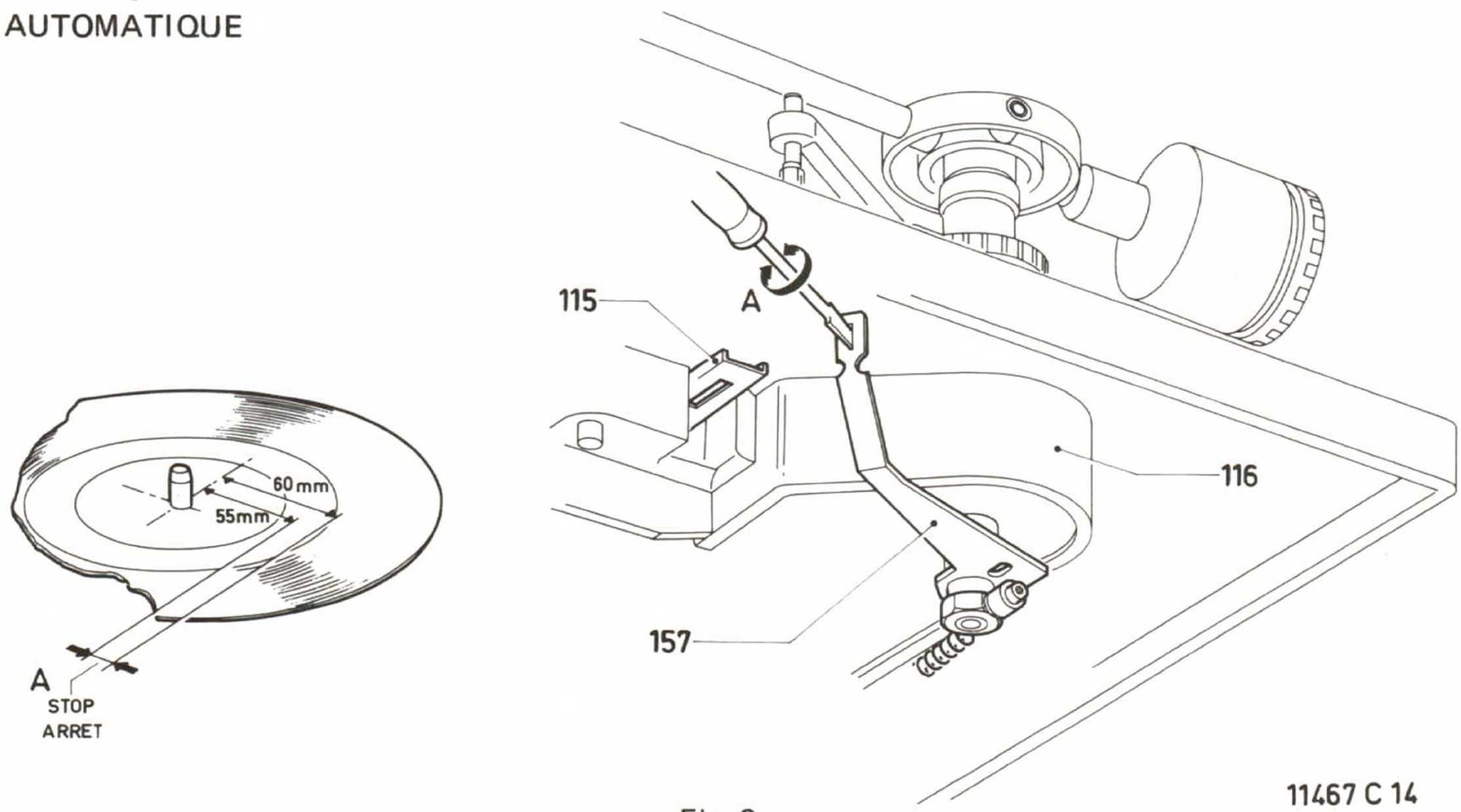


Fig. 3

## BOWDEN CABLE POS. 93
## CABLE BOWDEN POS. 93

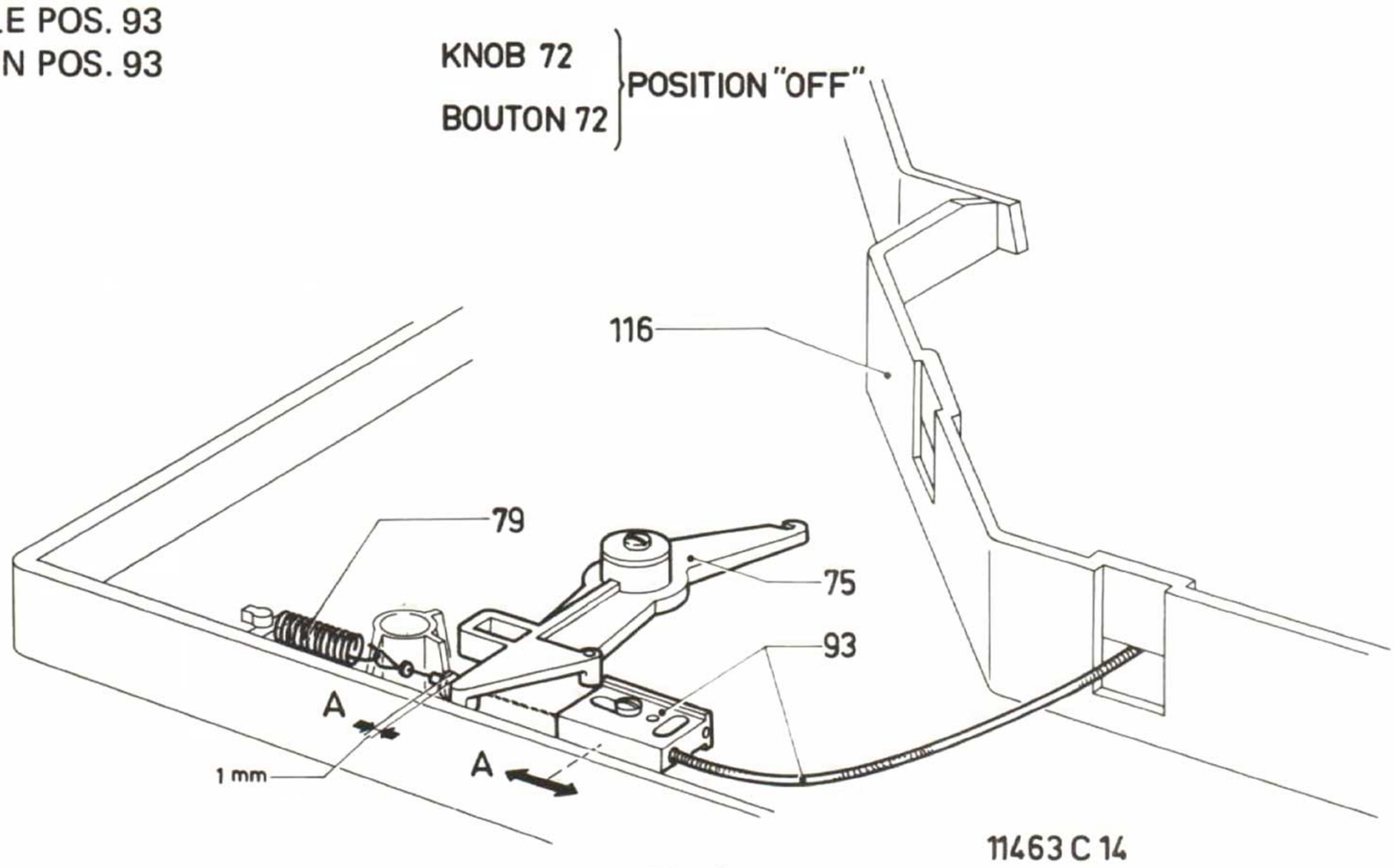


Fig. 4

CS57682

www.vinylengine.com

BOWDEN CABLE POS. 94
CABLE BOWDEN POS. 94

KNOB 72
BOUTON 72 } POSITION ▼

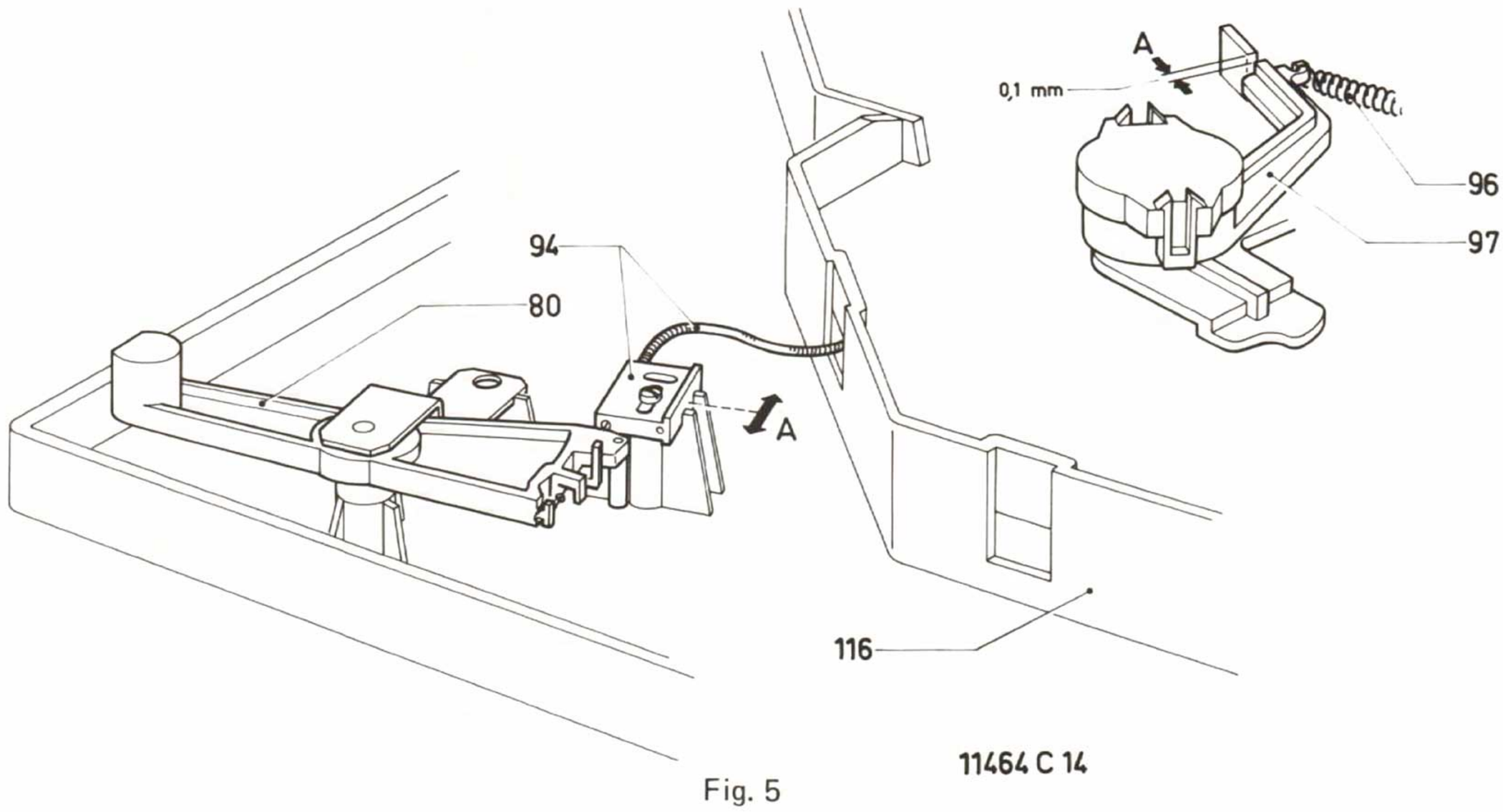


Fig. 5

LIFT MANUAL
LEVIER MANUEL

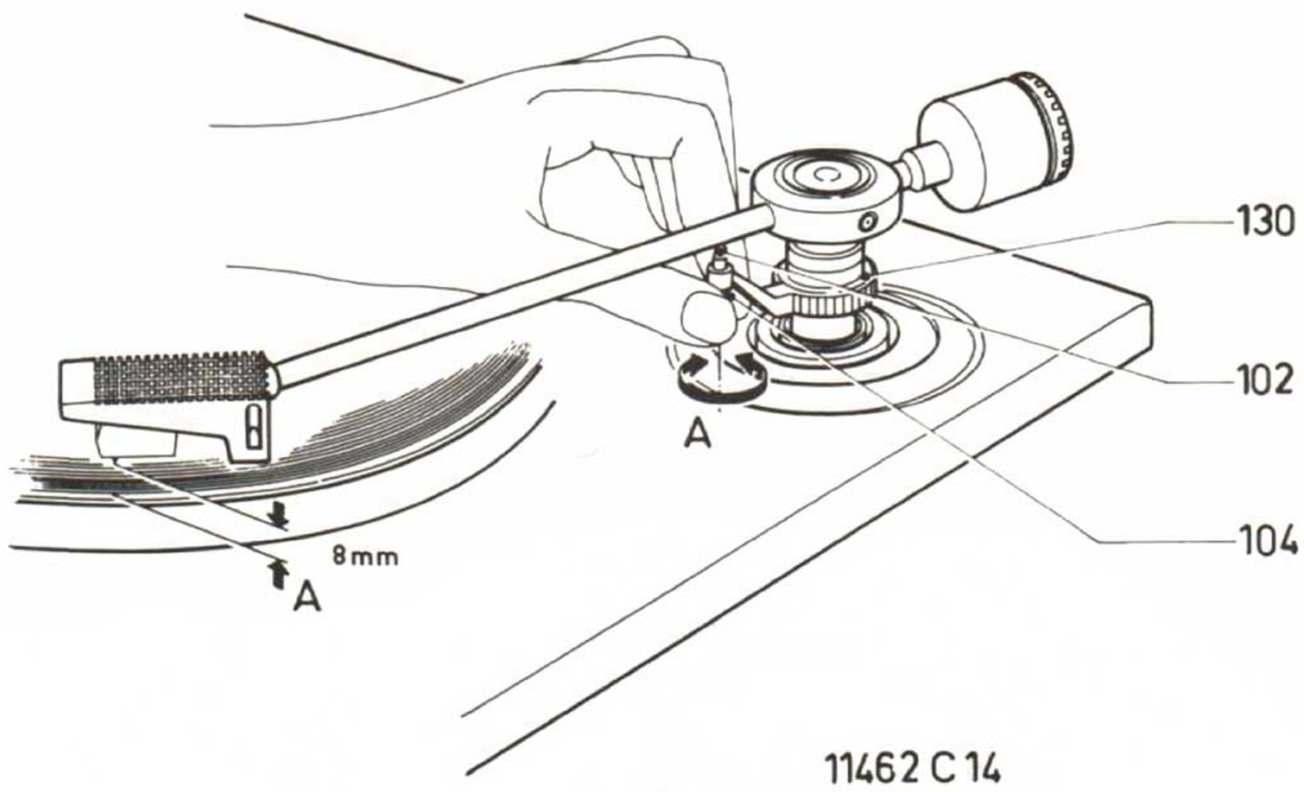


Fig. 6

FREE RUNNING PU ARM 101
LIBERATION DU BRAS DE LECTURE 101

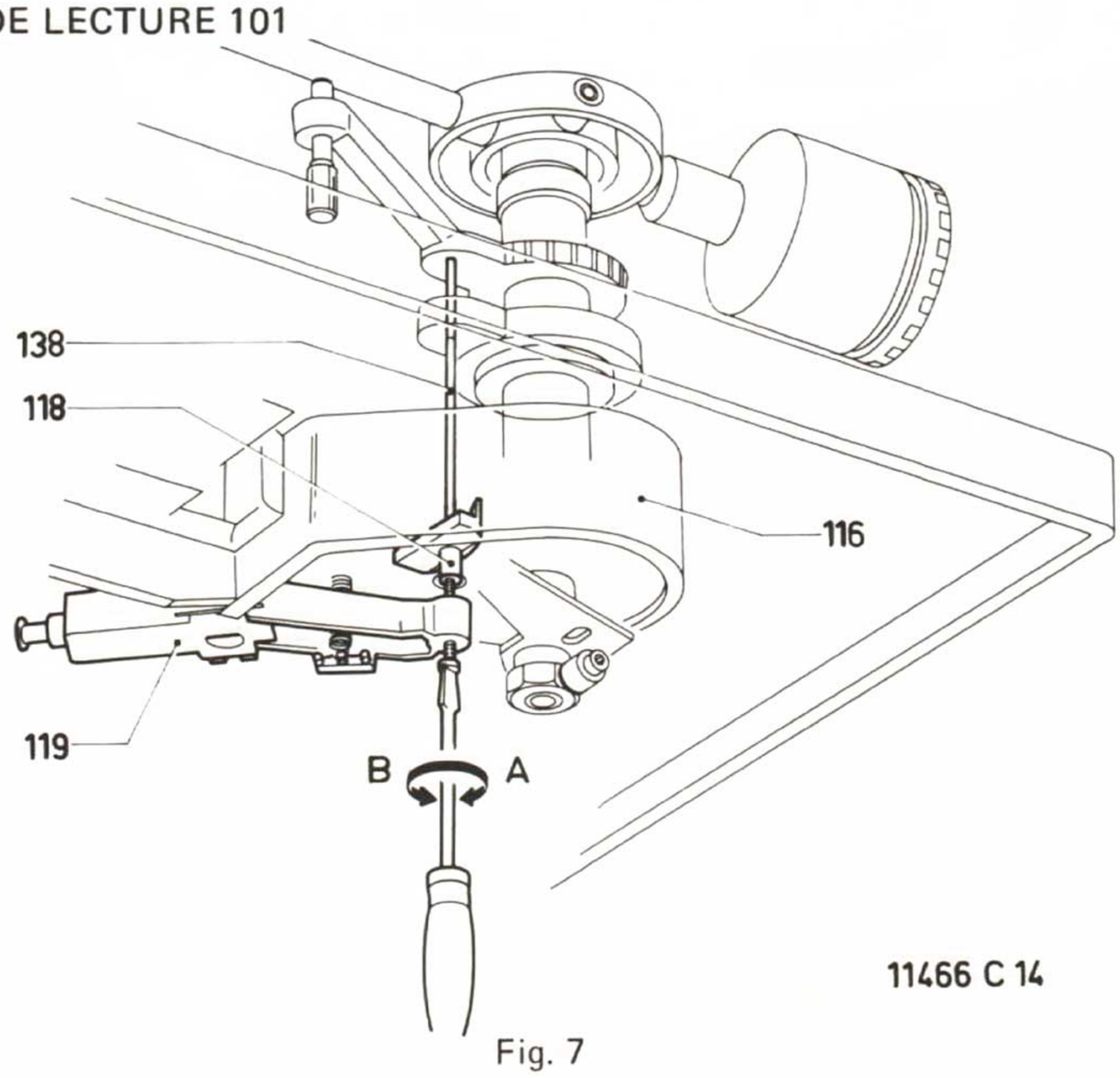


SEE TEXT
VOIR TEXTE

Fig. 7

www.vinylengine.com

GB

SEE VOIR Fig. 7

1. Lift in position ▼
2. PU arm near PU arm support
3. Turn the screw with cap. 118 so far clockwise (A) that, by means of lift piece 138, the PU arm just starts lifting.
4. Turn the screw two revolutions counterclockwise (B).

NL

1. Lift in positie ▼
2. P.U. arm naast P.U. arm steun.
3. Schroef met dopje 118 zover rechtsom (A) draaien totdat d.m.v. liftstuk 138 de P.U. arm juist gaat liften.
4. Daarna de schroef twee hele omwentelingen linksom (B) terug draaien.

F

1. Commande de montée/des cente bras de lecture sur ▼
2. Bras de lecture à côté du support.
3. Tourner la vis avec capuchon 118 aussi loin dans le sens horaire (A) gue grâce à la pièce de levage 138, le bras de lecture se soulève à peine.
4. Resserer la vis de deux tours complets dans le sens anti-horaire (B).

D

1. Lift in Stellung ▼
2. Tonarm neben Tonarmstütze
3. Schraube mit Kappe 118 so weit linksherum - drehen (A), dass durch Liftstück 138, der Tonarm sich gerade anhebt.
4. Schraube zwei Umdrehungen linksherumdrehen (B).

I

1. Controllo devazione/discesa del braccio di lettura su ▼
2. Braccio di lettura accanto al suo supporto.
3. Allentare la vite col capuccio 118 il piu lontano possibile nel senso orario (A) fino a quando grazie al pezzo di elevazione 138, il braccio si solleva a peu apena.
4. Stringere la vite di due giri completi nel senso antiorario (B).

S

1. Tonarmslyften i läge. ▼
2. Tonarmen nära tonarmsstödet.
3. Vrid skruven med kåpa 118 så långt medurs (A) att tonarmen via stycke 138 precis börjar höjas.
4. Vrid skruven två varv moturs (B).

DK

1. Løft i stilling ▼
2. Pick-uparmen lidt væk fra pick-upstøtten.
3. Drej skruen med kappe 118 så meget højre om (A) at løftestykket 138 lige netop begynder at løfte pick-uparmen.
4. Drej skruen to omgange venstre om (B).

N

1. Løfteanordning i stilling ▼
2. PU-arm nær pu-arm støtte
3. Drei skrue med kappe 118 så langt med urviseren (A) at, med hjelp av løftestykke 138, pu-armen såvidt begynner å løfte.
4. Drei skruen to omdreininger mot urviseren (B).

SF

1. Nostolaite asennossa ▼
2. Äänivarsi lähelle äänivarren tukea.
3. Käännä ruuvia hattuineen 118 niin paljon myötäpäivään (A), että nosto-osan 138 avulla äänivarsi alkaa juuri ja jurri nousta.
4. Käännä ruuvia kaksi kierrosta vastapäivään (B).

| | | |
|---|---|---|
| C601 | 4700 pF ± 20% 400 V | 4822 122 10113 |
| C602 (50 Hz) | 0,22 μF ± 10% 400 V | 4822 121 40181 |
| C602 (60 Hz) | 0,18 μF ± 10% 400 V | 4822 121 40011 |

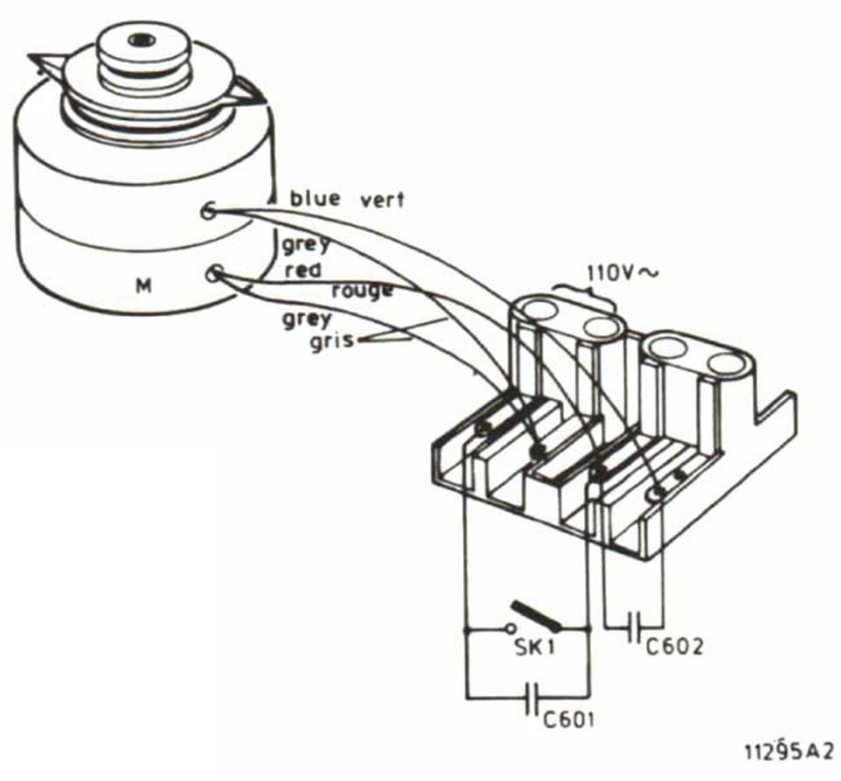


Fig. 8

Version /00

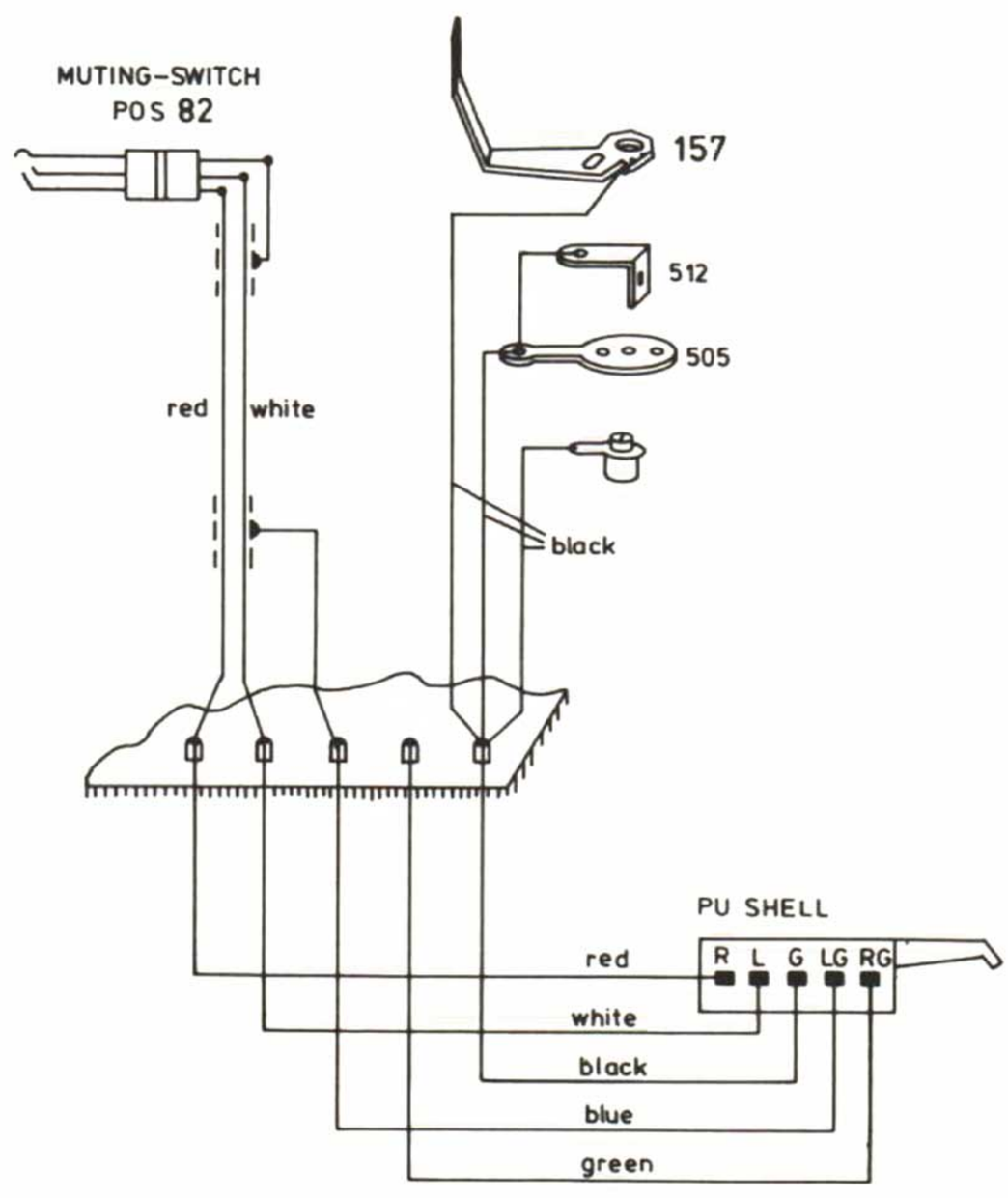


Fig. 9

www.vinylengine.com

| | | |
|---|---|---|
| 51 | | 4822 532 60579 |
| 52 | | 4822 466 50117 |
| 53 | | 4822 492 61215 |
| 54 | | 4822 528 10319 |
| 55 | | 4822 528 90266 |
| 58 | | 4822 358 30122 |
| 59 | (50 Hz) | 4822 361 70292 |
| 59 | (60 Hz) | 4822 361 70295 |
| 60 | | 4822 454 30262 |
| 61 | (silver, argent) | 4822 411 50434 |
| 61 | (black, noir) | 4822 411 50439 |
| 62 | | 4822 535 70512 |
| 65 | | 4822 492 40686 |
| 66 | | 4822 492 31367 |
| 67 | | 4822 462 70913 |
| 68 | | 4822 492 50845 |
| 69 | | 4822 535 70513 |
| 72 | (silver, argent) | 4822 411 50434 |
| 72 | (black, noir) | 4822 411 50439 |
| 73 | | 4822 492 31362 |
| 74 | | 4822 492 62082 |
| 75 | | 4822 402 30094 |
| 76 | | 4822 535 91064 |
| 79 | | 4822 492 31361 |
| 80 | | 4822 402 60571 |
| 81 | | 4822 402 60565 |
| 82 | | 4822 278 90373 |
| 83 | | 4822 492 31366 |
| 86 | | 4822 402 60567 |
| 87 | | 4822 402 30092 |
| 88 | | 4822 402 60566 |
| 89 | | 4822 402 60569 |
| 90 | | 4822 520 10379 |
| 93 | | 4822 321 30159 |
| 94 | | 4822 321 30158 |
| 95 | | 4822 277 60065 |
| 96 | | 4822 492 31364 |
| 97 | | 4822 402 60573 |
| 100 | | 4822 492 40687 |
| 101+123+124 +128 +129+ 508 | | 4822 251 70154 |
| 102 | | 4822 462 71076 |
| 103 | | 4822 444 30169 |
| 104 | | 4822 535 80551 |
| 108 | | 4822 532 10718 |
| 109 | | 4822 325 80066 |
| 110 | | 4822 492 31359 |
| 111 | | 4822 492 31358 |
| 112 | | 4822 492 31356 |
| 114 | | 4822 402 30093 |
| 115 | | 4822 402 60564 |
| 116 | | 4822 464 50061 |
| 117 | | 4822 492 31365 |
| 118 | | 4822 462 71076 |
| 119 | | 4822 535 70514 |
| 121 | | 4822 492 40689 |
| 122 | | 4822 492 31145 |
| 123 | | 4822 462 50205 |
| 124 | | 4822 535 60031 |
| 125 | | 4822 691 30066 |
| 128 | | 4822 460 20166 |
| 129 | | 4822 323 50054 |
| 130 | | 4822 402 60568 |
| 131+136+138 | | 4822 402 60574 |
| 132 | | 4822 492 40688 |
| 135 | | 4822 454 30261 |
| 136 | | 4822 492 31355 |
| 137 | | 4822 413 10148 |
| 138 | | 4822 535 70511 |
| 139 | | 4822 454 30264 |
| 142 | | 4822 532 10719 |
| 143 | | 4822 532 10716 |
| 144 | | 4822 520 10381 |
| 145 | | 4822 402 50141 |
| 149 | | 4822 402 60576 |
| 150 | | 4822 454 30263 |
| 151 | | 4822 492 31367 |
| 152 | | 4822 535 60029 |
| 153 | | 4822 691 30067 |
| 156 | | 4822 402 60572 |
| 157 | | 4822 402 60575 |
| 158 | | 4822 492 31363 |
| 159 | | 4822 462 71079 |

GB

Safety regulations require that the set be restored to its original condition and that parts which are identical with those specified, be used.

NL

Veiligheidsbepalingen vereisen, dat het apparaat bij reparatie in zijn oorspronkelijke toestand wordt teruggebracht en dat onderdelen, identiek aan de gespecificeerde, worden toegepast.

F

Les normes de sécurité exigent que l'appareil soit remis à l'état d'origine et que soient utilisées les pièces de rechange identiques à celles spécifiées.

D

Die Sicherheitsvorschriften erfordern, dass das Gerät sich nach der Reparatur in seinem originalen Zustand befindet und dass die benutzten Einzelteile den aufgeführten Teilen identisch sind.

I

Le norme di sicurezza esigono che l'apparecchio venga rimesso nelle condizioni originali e che siano utilizzati i pezzi di ricambio identici a quelli specificati.

S

Säkerhetsbestämmelserna kräver att varje reparation skall utföras korrekt med hänsyn till ursprunglig placering av komponenter, ledningar etc. och med användning af föreskrivna reservdelar.

DK

Myndighedernes sikkerheds- og radiostøjbestemmelser kraever, at enhver reparation skal udføres korrekt m.h.t. overholdelse af originalplacering og montering af komponenter, ledningsbundter, etc., og ved anvendelse af de foreskrevne reservedele.

N

Sikkerhetsbestemmelser kreves at apparatet blir gjennöpprettet til orignial utførelse og at deler som er identiske med de som er spesifisert, blir benyttet.

SF

Korjatessa laitetta on turvallisuussyistä ehdottomasti eneteltävä oikein ja käytettävä tehtaan määräämiä alkuperäisvaraosia.

CS57683

www.vinylengine.com

## Version /55/56/57/58/59

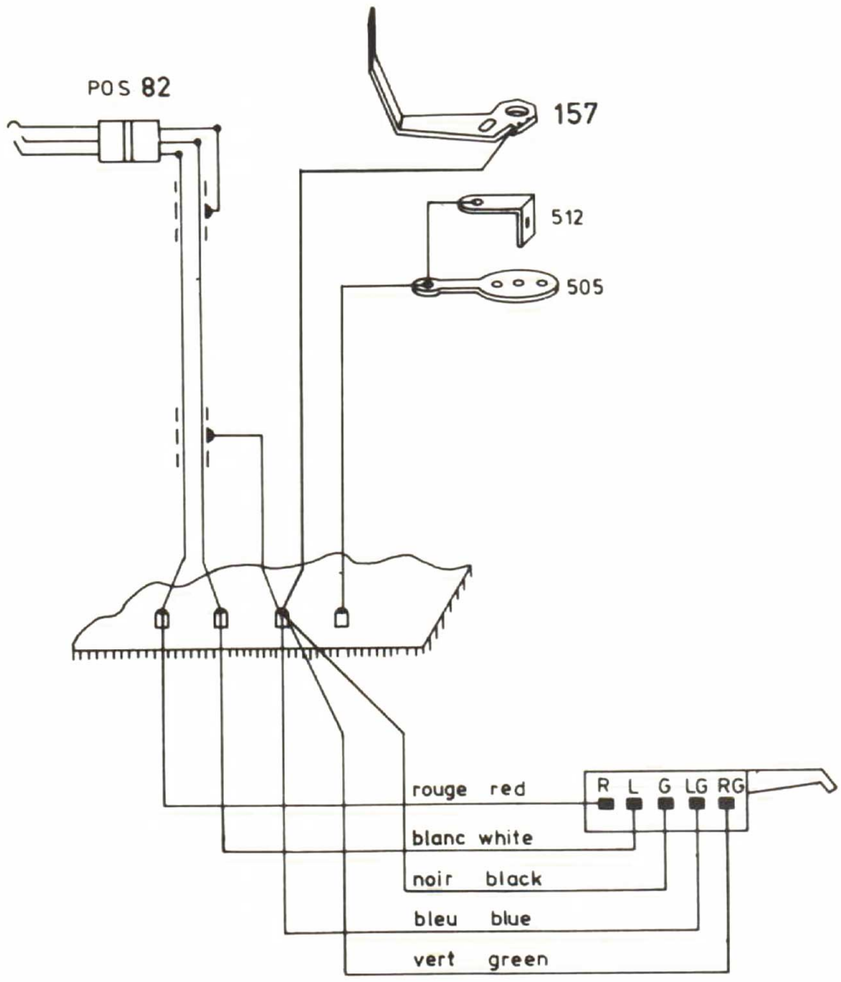


Fig. 10

12105A2

**NOTE:** From LF01 on, V-plate 116, bearing bush 142 and the 2 washers 143 have been changed.
For service purposes, we supply the changed V-plate only, under the old codenumber 4822 464 50061.

Codenumber new bearing bush 142 : 4822 532 20667
Codenumber new washers 143 : 4822 532 10724

When V-plate 116 is exchanged in sets marked LF00 and up, also the new bearing bush 142 and the new washers 143 have to be fitted.

www.vinylengine.com