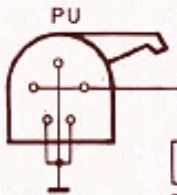

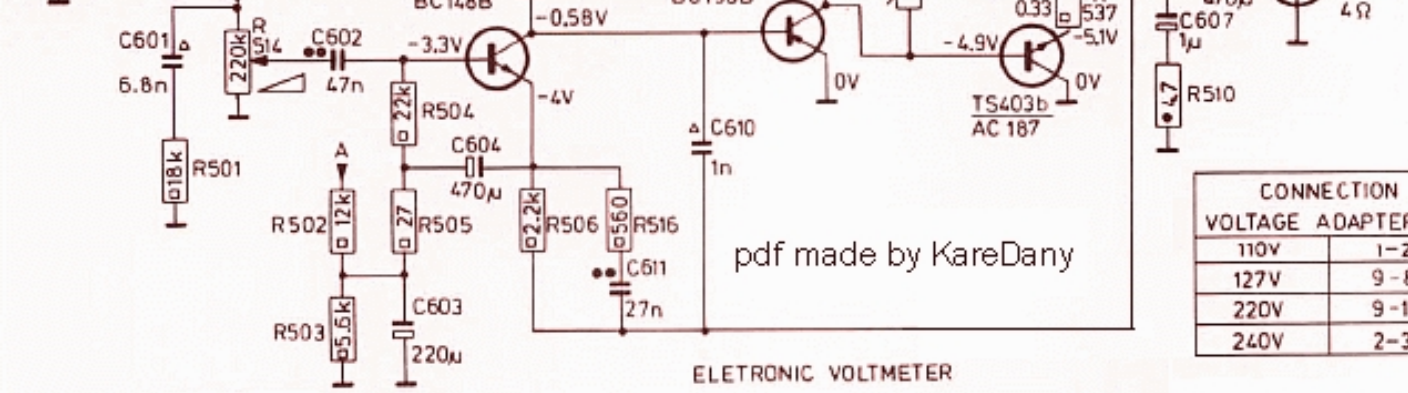

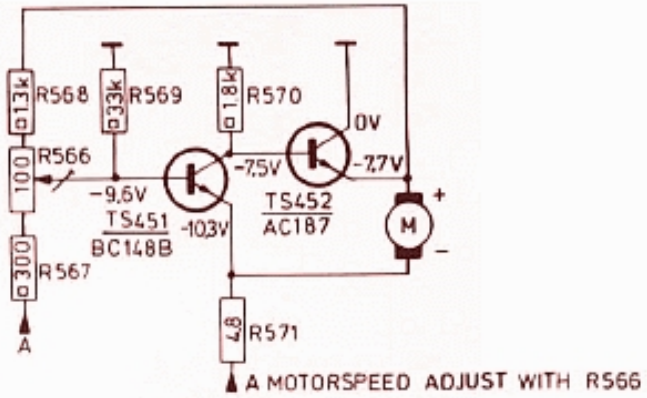

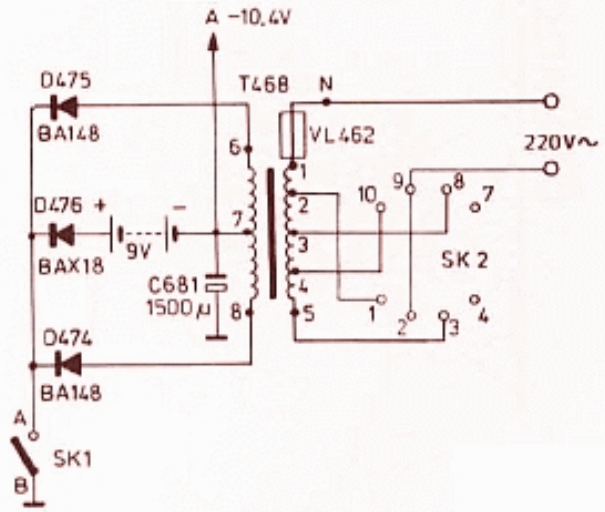

pdf made by KareDany

CONNECTION VOLTAGE ADAPTER	
110V	1–2
127V	9–8
220V	9–10
240V	2–3

ELETRONIC VOLTMETER

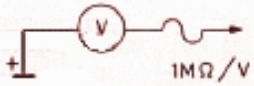

R512	NTC130Ω
R513	220 Ω
R514	220 kΩ (log)
R515	100 kΩ (lin)
R566	100 Ω
R571	4,8 Ω

Philips
06GF503/23B/23E/23L