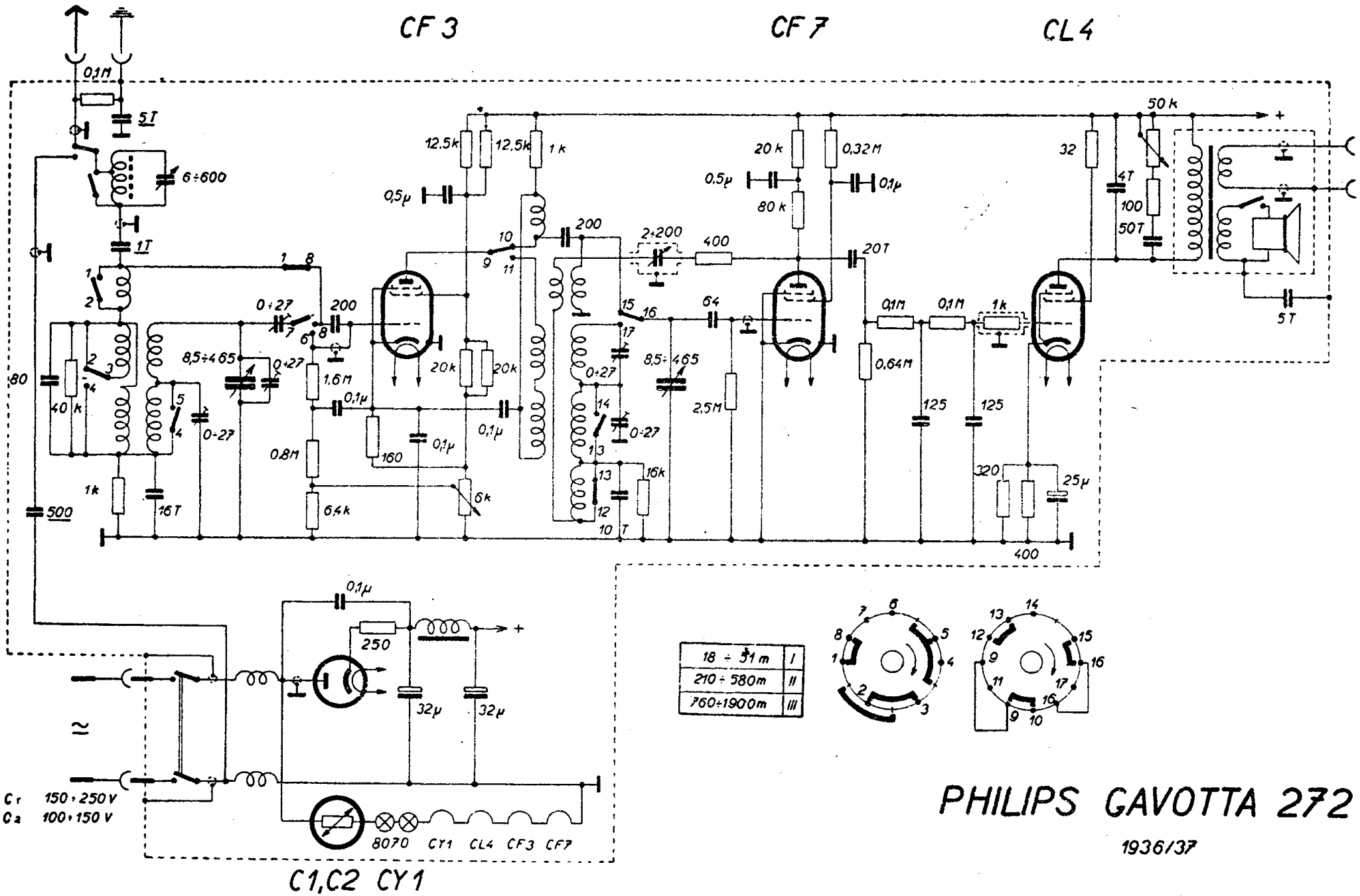

PHILIPS GAVOTTA 272 HU

1936/37