Schaltplan des HF-Teiles

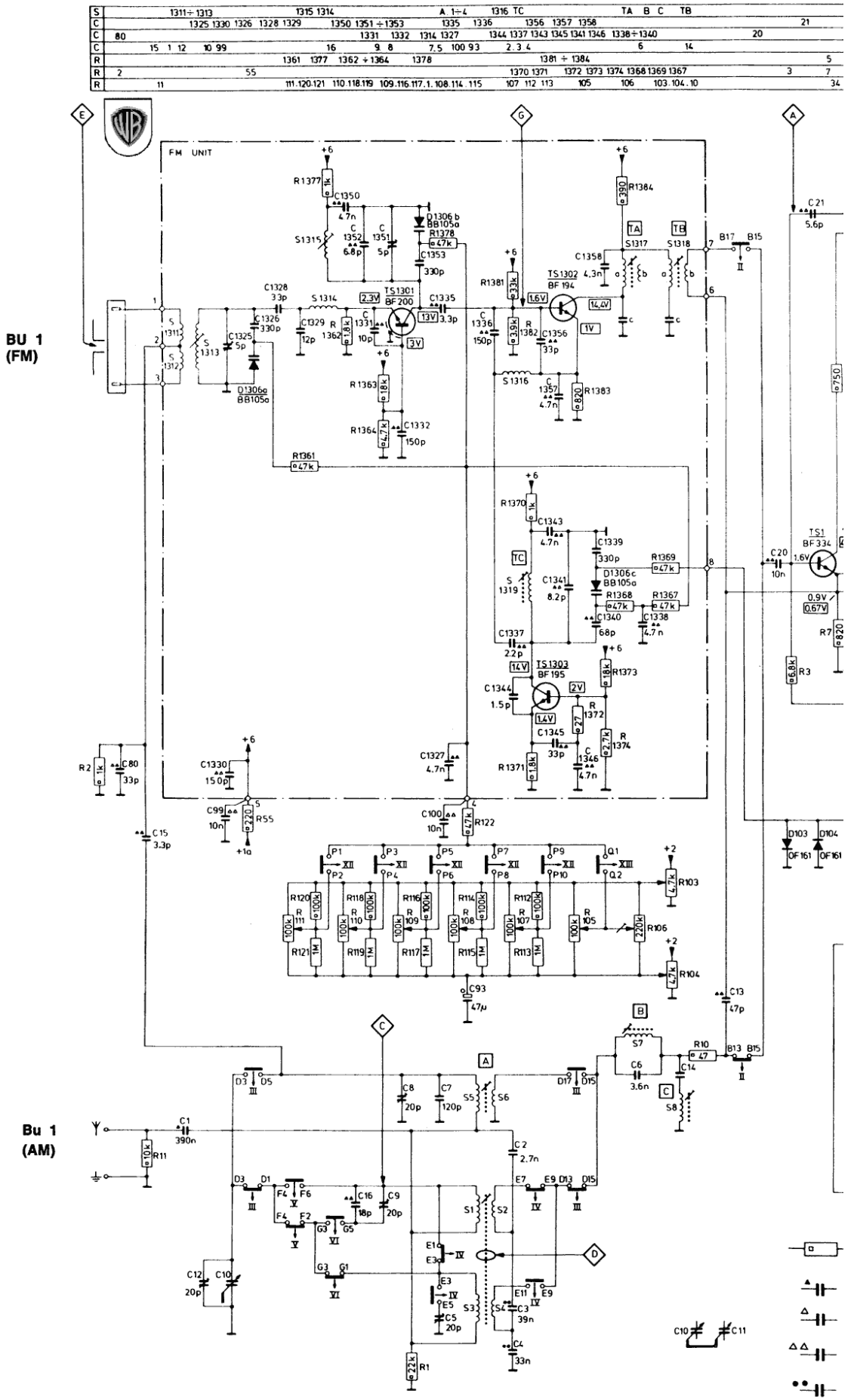

www.radiomuseum.org; upload by Wolfgang Bauer; download by Jean Pierre Tonnelier Fri Jan 09 09:36:58 CET 2015 [1496 x 2116, 86kb, ? DPI]