SECTION 3

SCHEMATIC DIAGRAM

1. AT-2650 No.2-1 1562446A SCHEMATIC DIAGRAM
2. AM-2650 No.2-2 1562447A SCHEMATIC DIAGRAM

μPC1178C

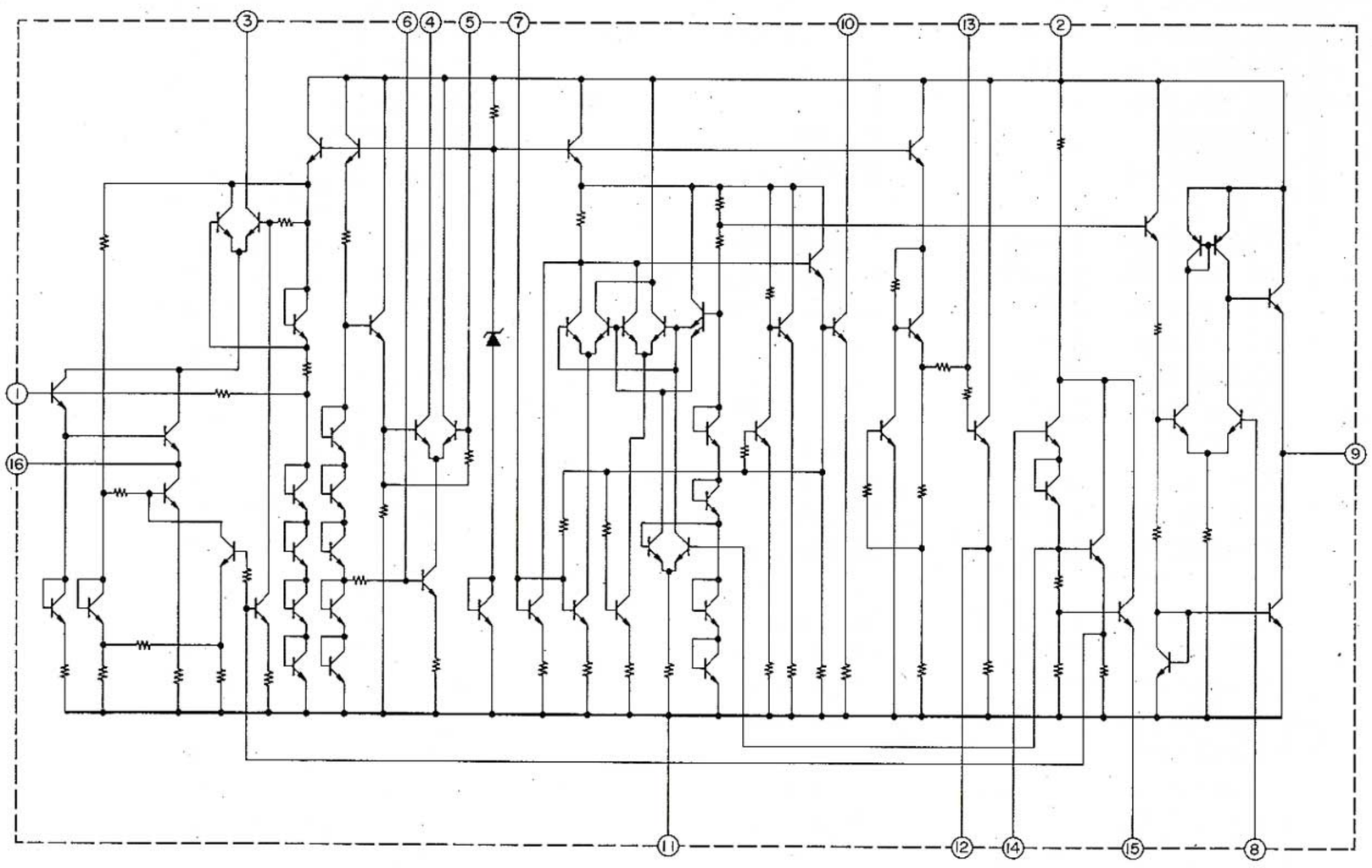

μPC1173C

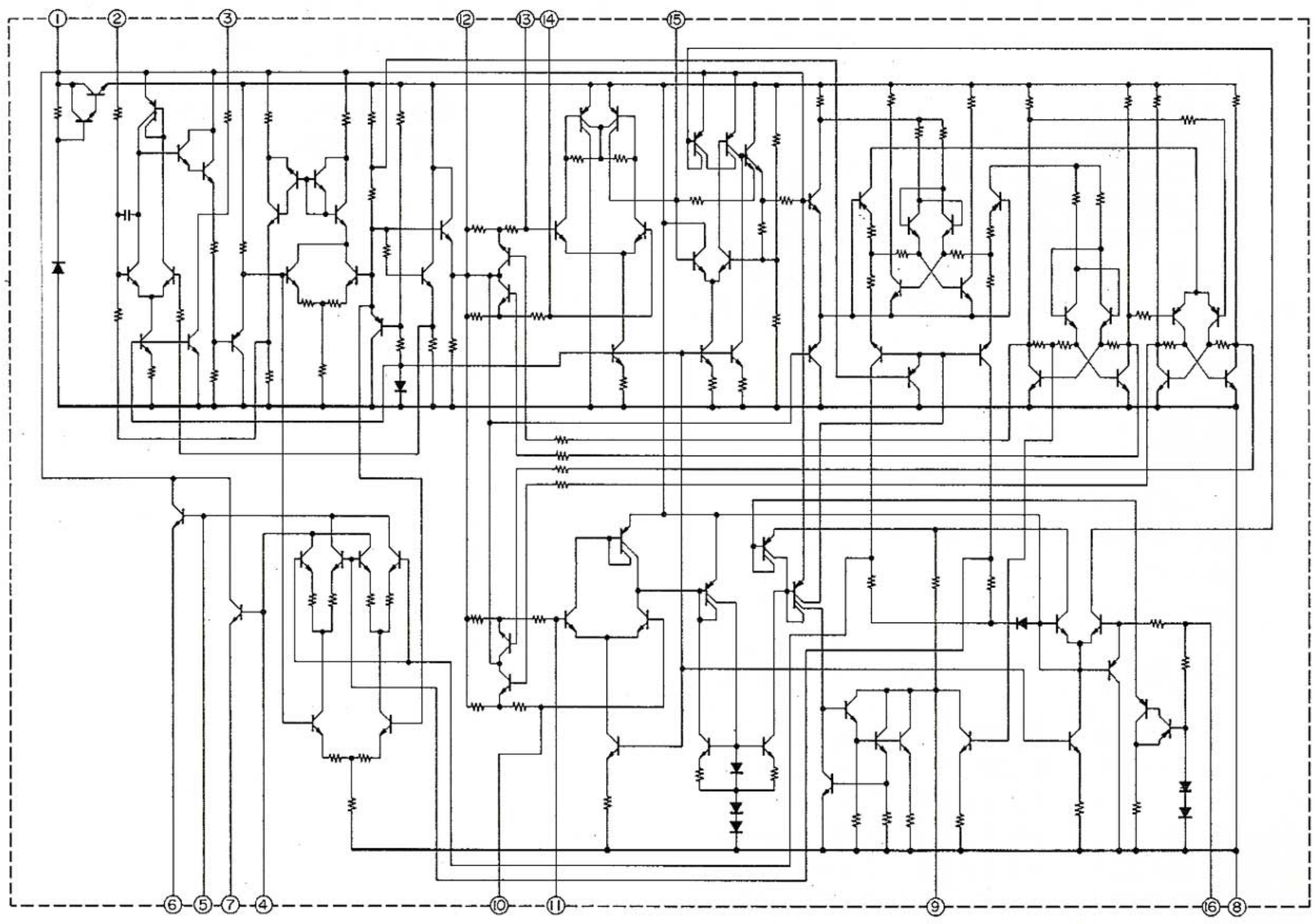

LA3122S/LA3133

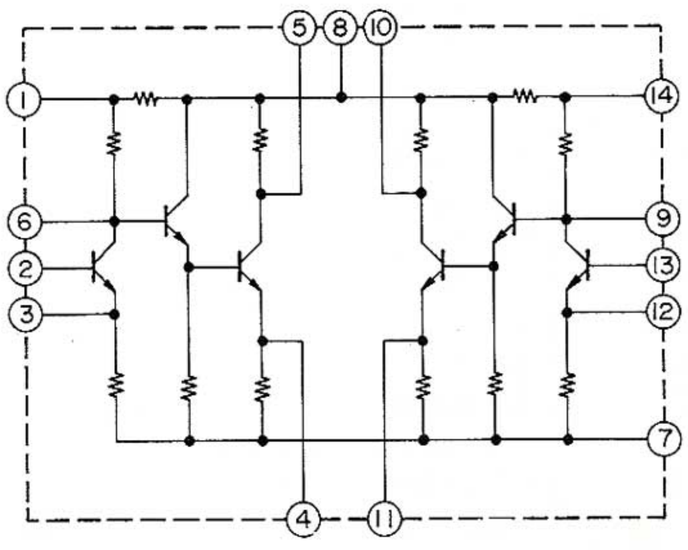

www.hifiengine.com

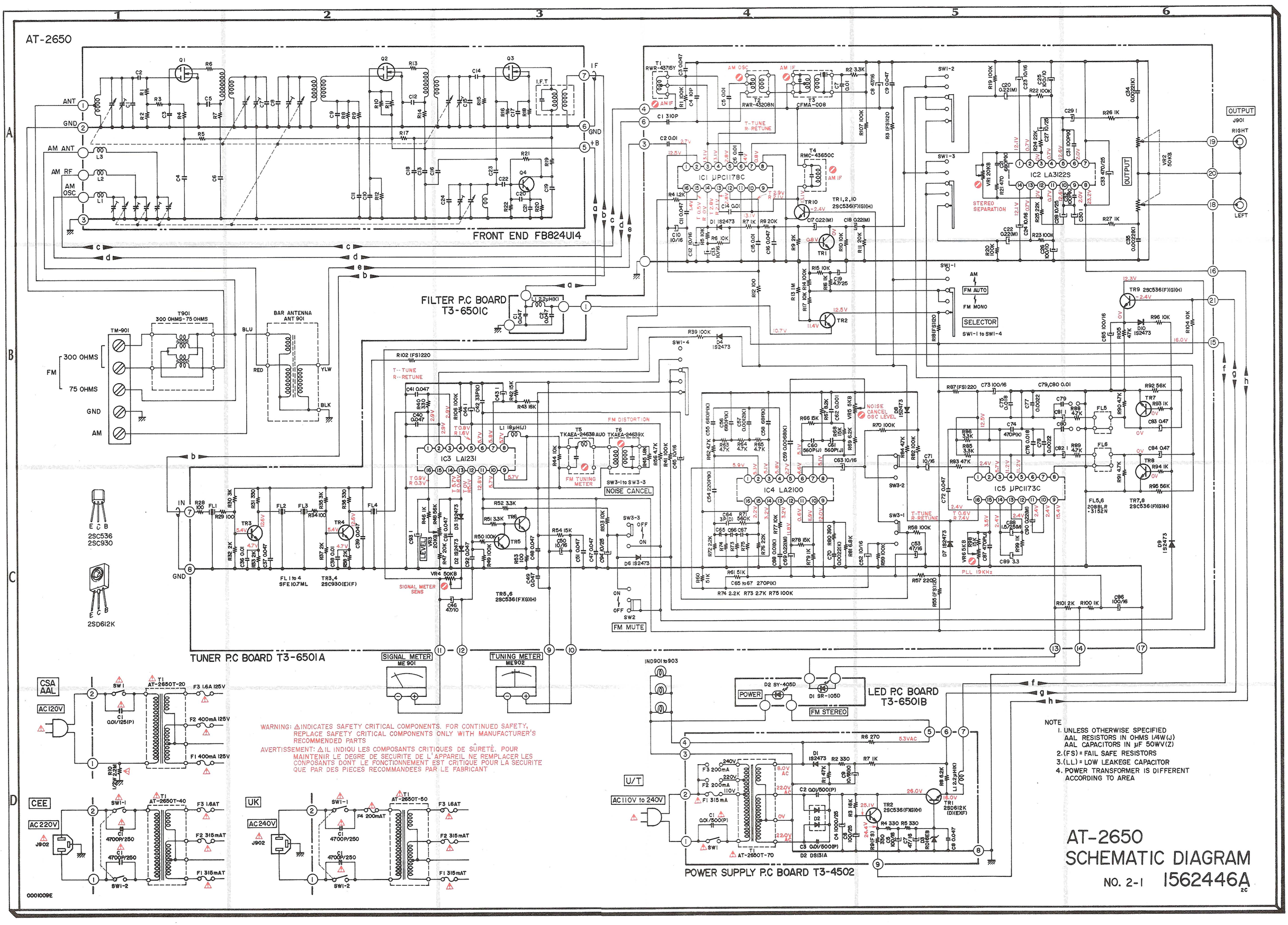
AT-2650
FRONT END FB824UI4
FILTER P.C BOARD T3-6501C
TUNER P.C BOARD T3-6501A
LED P.C BOARD T3-6501B
POWER SUPPLY P.C BOARD T3-4502
SIGNAL METER ME 901
TUNING METER ME902
IC1 μPC1178C
IC2 LA3122S
IC3 LA1231
IC4 LA2100
IC5 μPC1173C
SELECTOR
SWI-1 to SWI-4
NOISE CANCEL
FM MUTE
FM STEREO
POWER
STEREO SEPARATION
OUTPUT
J901
RIGHT
LEFT
TM-901
T901 300 OHMS-75 OHMS
BAR ANTENNA ANT 901
FM
300 OHMS
75 OHMS
GND
AM
ANT
AM ANT
AM RF
AM OSC
IN
2SC536
2SC930
2SD612K
CSA AAL
AC120V
CEE
AC220V
J902
UK
AC240V
U/T
AC110V to 240V
WARNING: ⚠ INDICATES SAFETY CRITICAL COMPONENTS. FOR CONTINUED SAFETY, REPLACE SAFETY CRITICAL COMPONENTS ONLY WITH MANUFACTURER'S RECOMMENDED PARTS
AVERTISSEMENT: ⚠ IL INDIQU LES COMPOSANTS CRITIQUES DE SÛRETÉ. POUR MAINTENIR LE DEGRE DE SECURITE DE L'APPAREIL NE REMPLACER LES CONPOSANTS DONT LE FONCTIONNEMENT EST CRITIQUE POUR LA SECURITE QUE PAR DES PIECES RECOMMANDEES PAR LE FABRICANT
NOTE
1. UNLESS OTHERWISE SPECIFIED AAL RESISTORS IN OHMS 1/4W(J) AAL CAPACITORS IN μF 50WV(Z)
2. (FS) = FAIL SAFE RESISTORS
3. (LL) = LOW LEAKEGE CAPACITOR
4. POWER TRANSFORMER IS DIFFERENT ACCORDING TO AREA
AT-2650
SCHEMATIC DIAGRAM
NO. 2-1 1562446A
2C

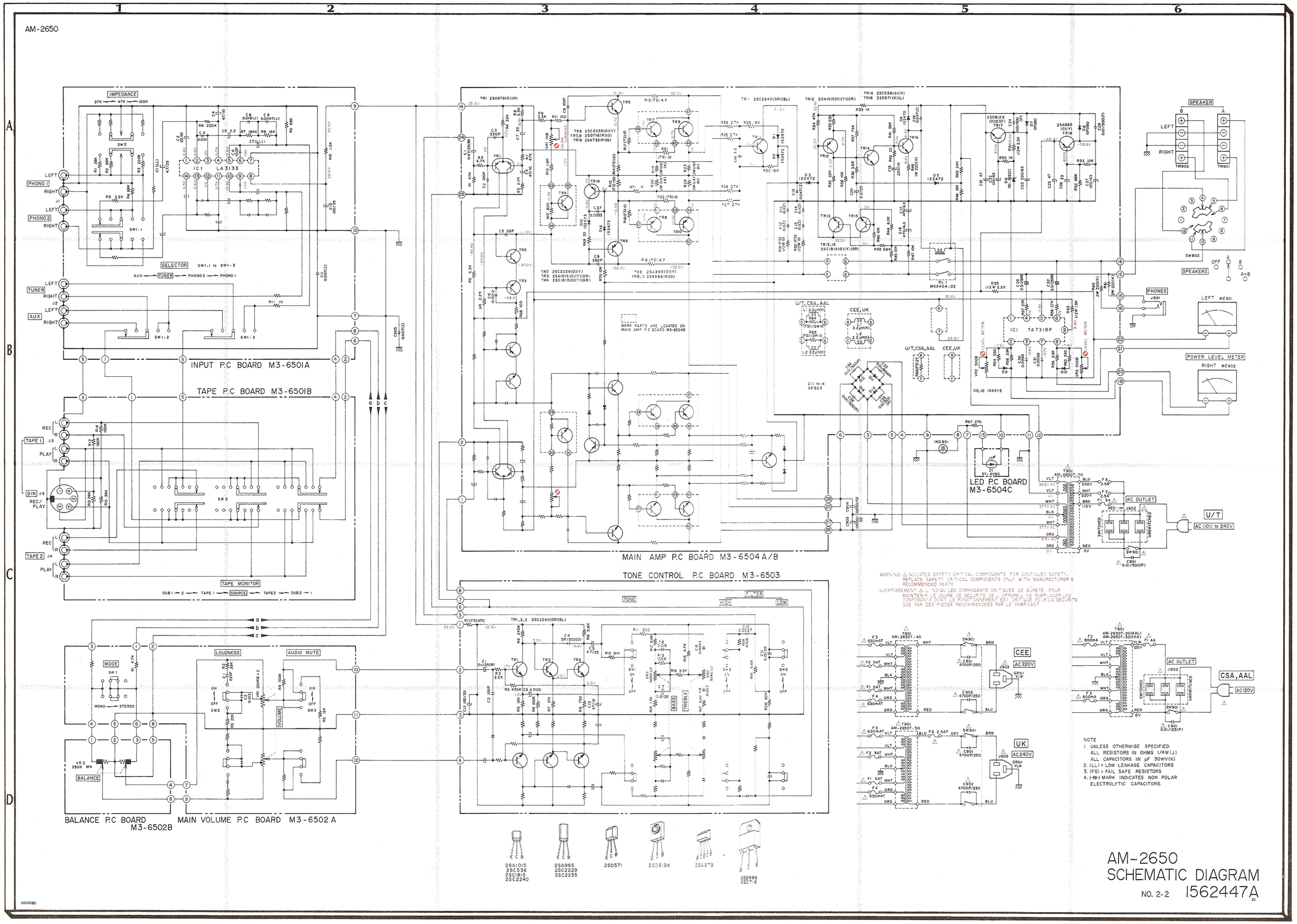

WARNING: △ INDICATES SAFETY CRITICAL COMPONENTS. FOR CONTINUED SAFETY, REPLACE SAFETY CRITICAL COMPONENTS ONLY WITH MANUFACTURER'S RECOMMENDED PARTS.

AVERTISSEMENT! △ IL INDIQUE LES COMPOSANTS CRITIQUES DE SÛRETÉ. POUR MAINTENIR LE DEGRÉ DE SÉCURITÉ DE L'APPAREIL, NE REMPLACER LES COMPOSANTS QUAT LE FONCTIONNEMENT EST CRITIQUE POUR LA SÉCURITÉ QUE PAR DES PIÈCES RECOMMANDÉES PAR LE FABRICANT.

NOTE
1. UNLESS OTHERWISE SPECIFIED
   ALL RESISTORS IN OHMS 1/4W(J)
   ALL CAPACITORS IN μF 50WV(K)
2. (LL) = LOW LEAKAGE CAPACITORS
3. (FS) = FAIL SAFE RESISTORS
4. (-##-) MARK INDICATES NON POLAR ELECTROLYTIC CAPACITORS.

AM-2650
SCHEMATIC DIAGRAM

NO. 2-2 1562447A