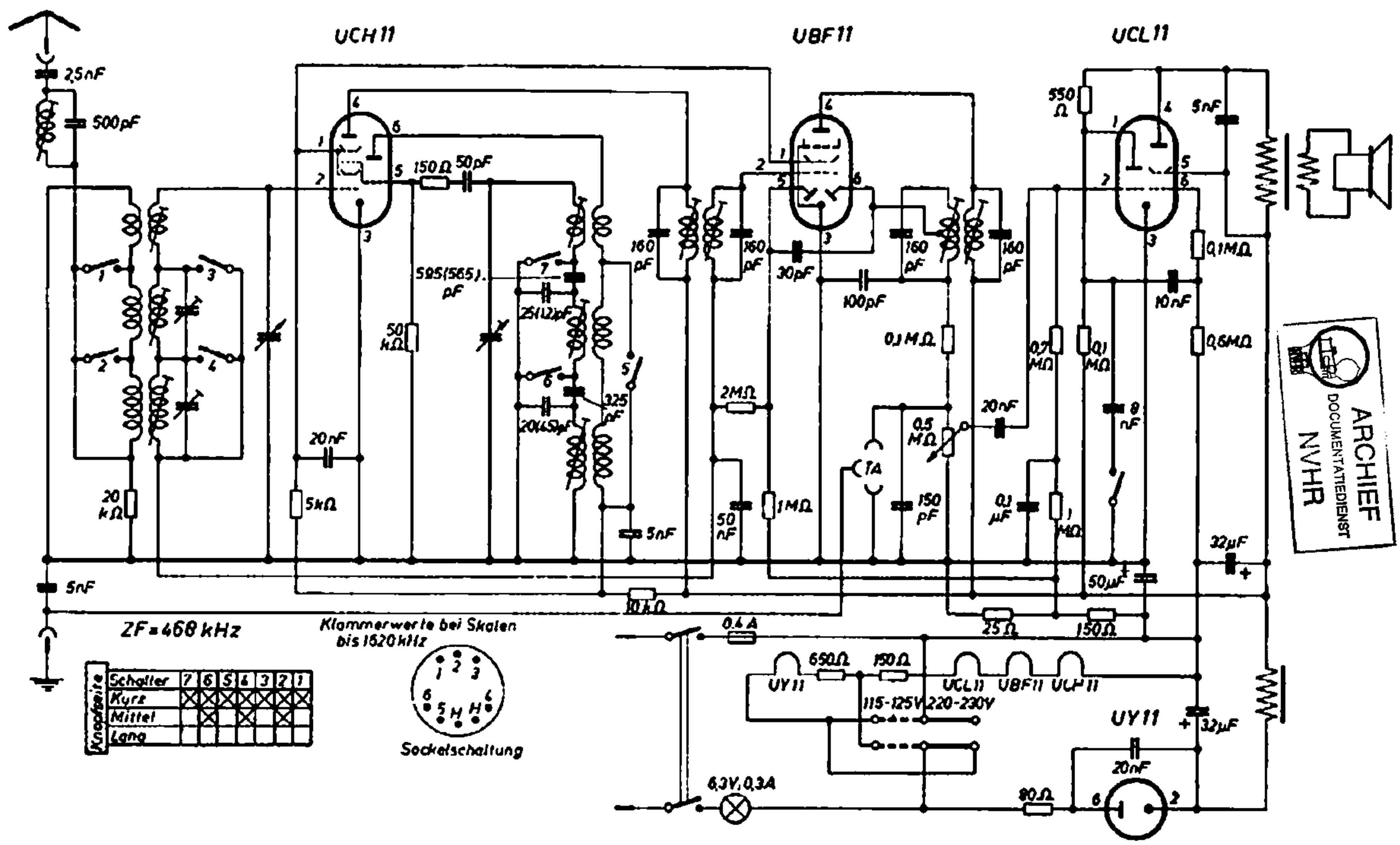Schaub Standard-Super U 11