Ned. Ver. V. Historie V/d Radio
ARCHIEF
DOCUMENTATIEDIENST
NVHR

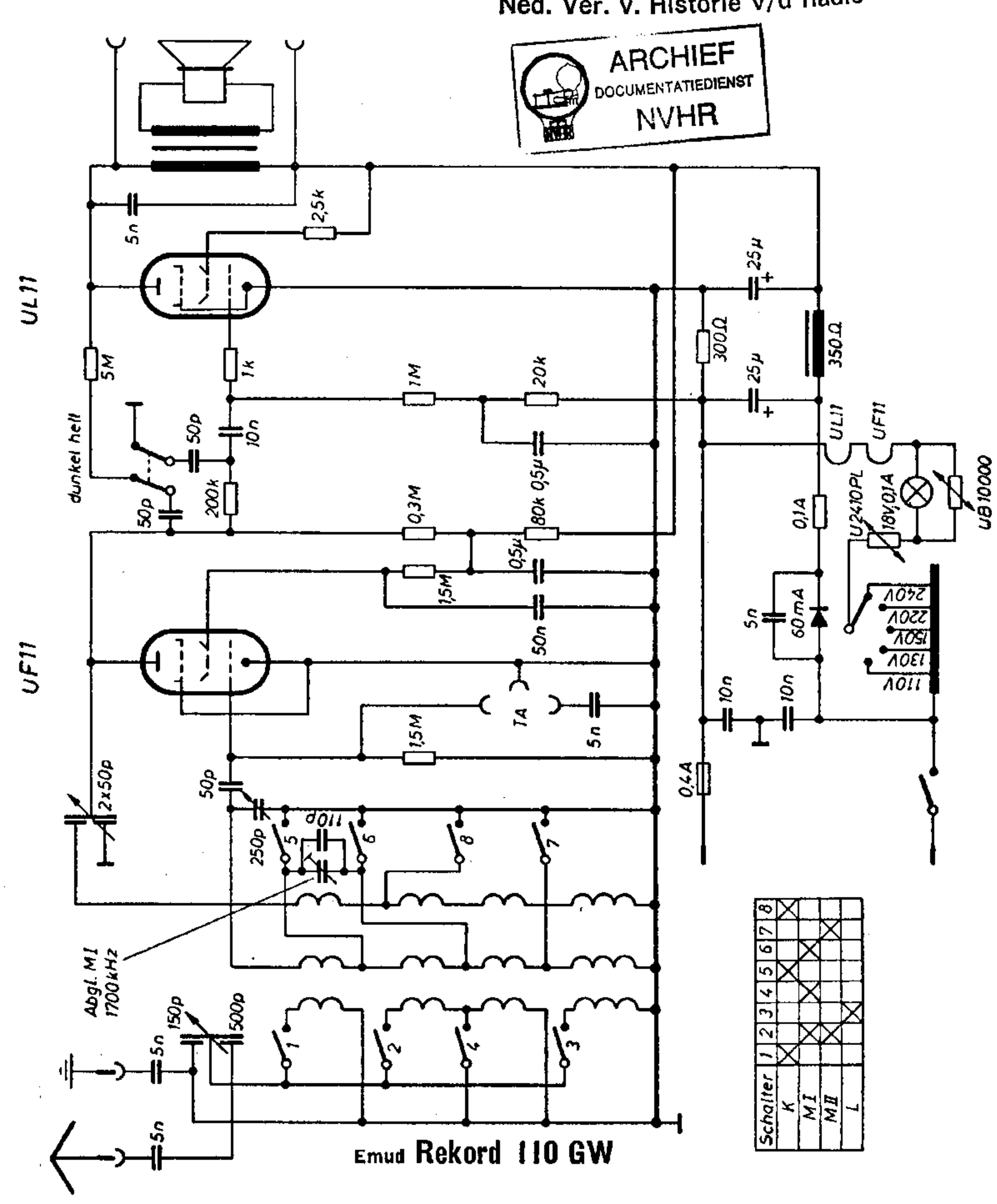

Emud Rekord 110 GW