MANUAL OF 1950 MOST-OFTEN-NEEDED RADIO DIAGRAMS

ARVIN RADIO — MODELS 440T
CHASSIS RE-278 — 4 TUBE AC — DC
NOBLITT-SPARKS INDUSTRIES, Inc.

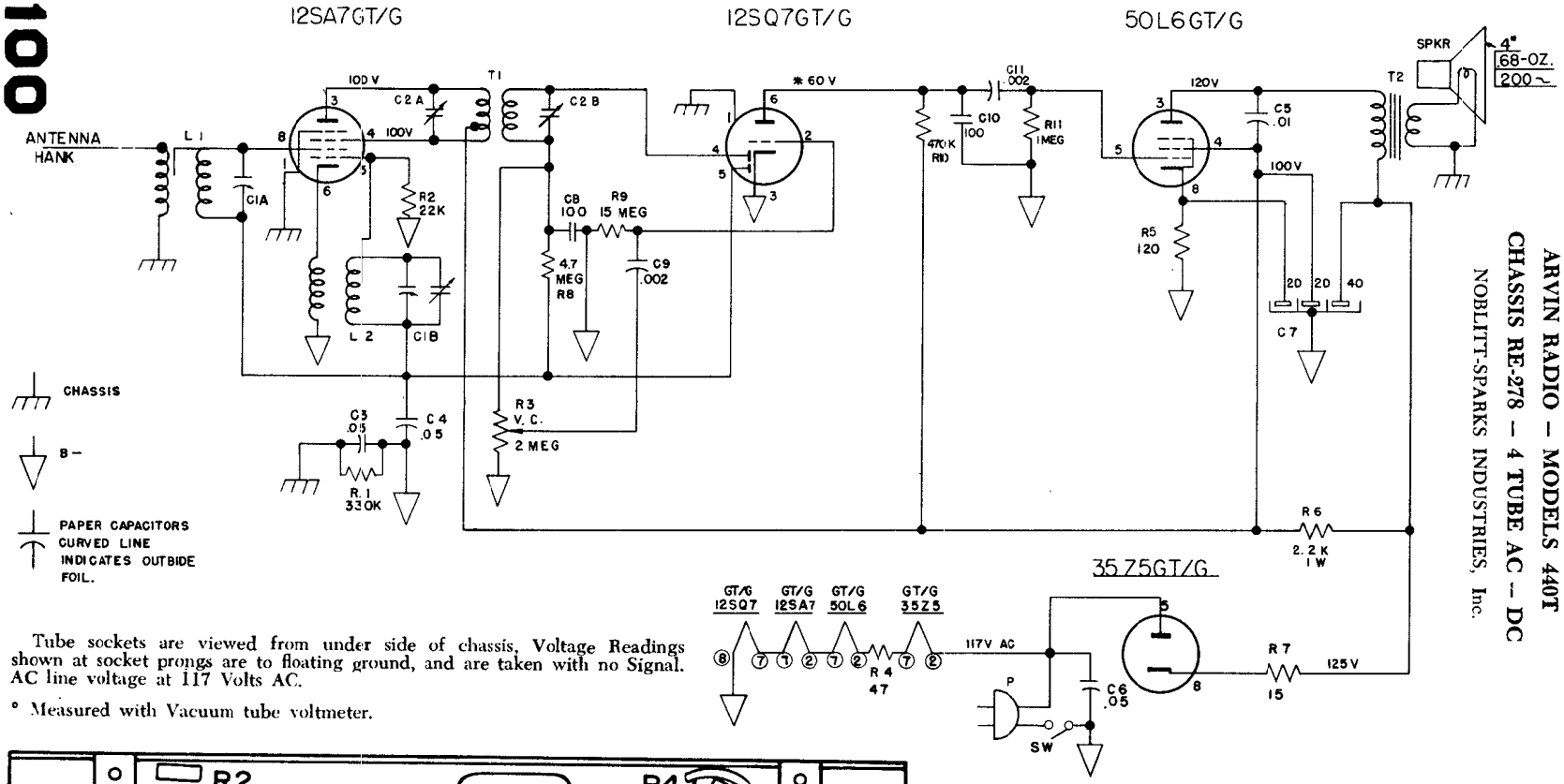

Tube sockets are viewed from under side of chassis, Voltage Readings shown at socket prongs are to floating ground, and are taken with no Signal. AC line voltage at 117 Volts AC.

° Measured with Vacuum tube voltmeter.

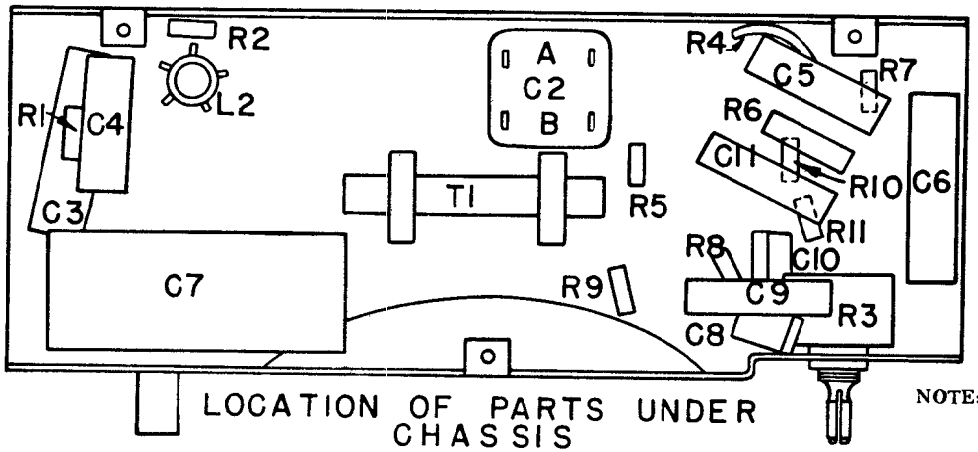

LOCATION OF PARTS UNDER CHASSIS

FREQUENCY RANGE
- Broadcast ---------- 540-1600 kc
- IF ---------- 455 kc

TUBES AND FUNCTIONS
- 12SA7 ---------- Mixer-oscillator
- 12SQ7 ---------- Detector — AVC-AF.
- 50L6GT ---------- Output
- 35Z5GT ---------- Rectifier

POWER SUPPLY
105-125 Volts, AC-DC, 30 Watts

POWER OUTPUT
Type: Beam tube
- Undistorted ---------- 1 Watt
- Maximum ---------- 1.85 Watts
- Plate Load ---------- 2000 Ohms

NOTE: Capacity Coupling is built in the antenna and oscillator coils. On some early Production sets, A 14 uuf. mica. Condenser will be used in place of the built in Capacity on the Antenna Coil.