FIG.1 SONY TC355 CIRCUIT DIAGRAM

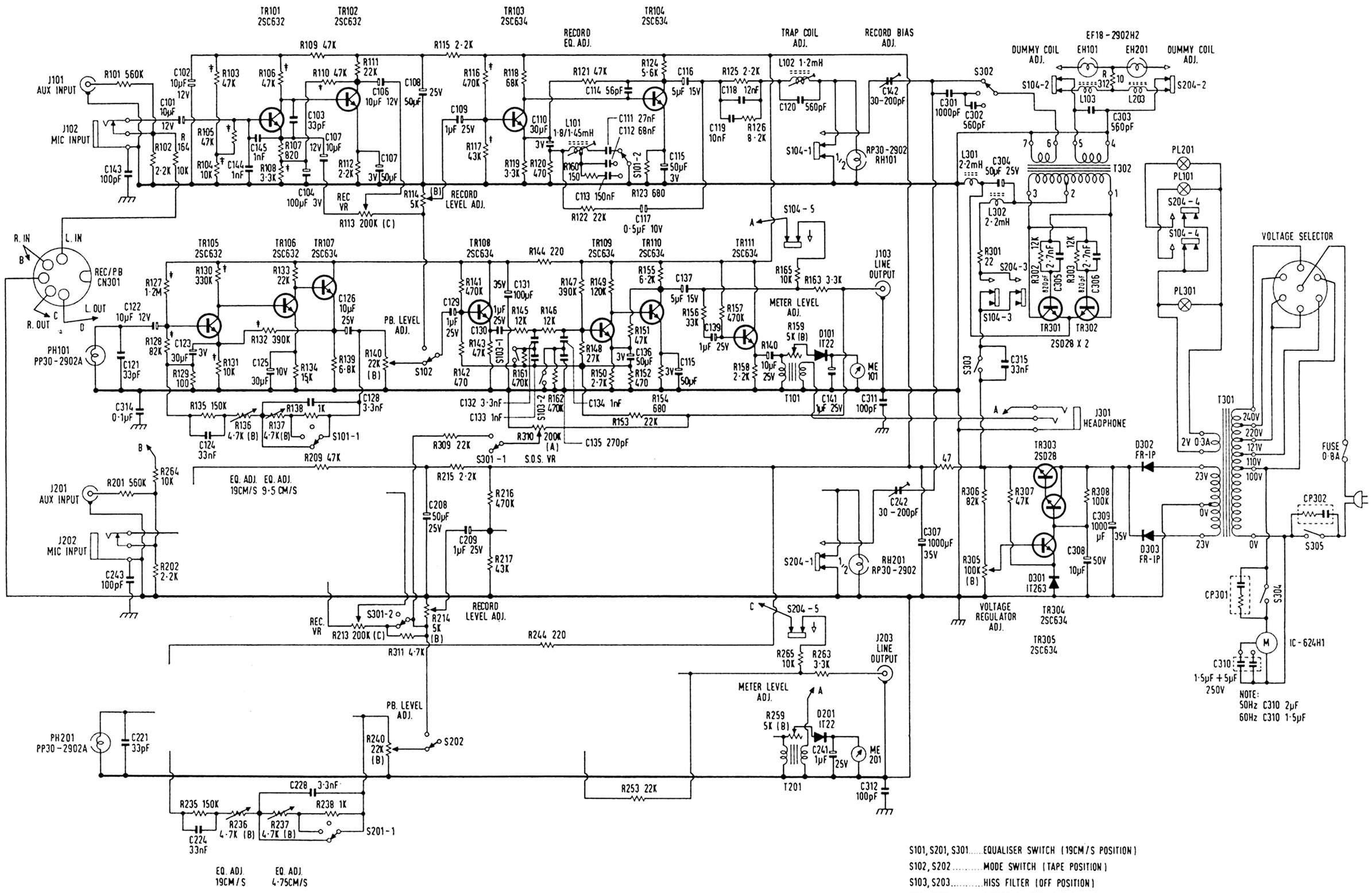

‡ SHOWN AT RESISTOR INDICATES LOW NOISE RESISTOR

(A), (B) OR (C) SHOWN AT POTENTIOMETER INDICATE CHARACTERISTIC CURVE

S101, S201, S301.....EQUALISER SWITCH (19CM/S POSITION)
S102, S202.....MODE SWITCH (TAPE POSITION)
S103, S203.....HISS FILTER (OFF POSITION)
S104, S204.....RECORD SWITCH (OFF POSITION)
S301.....SOUND-ON-SOUND SWITCH (OFF POSITION)
S303.....BIAS SWITCH
S304.....AUTOMATIC SHUT-OFF SWITCH
S305.....POWER ON/OFF SWITCH

www.hifiengine.com