Mod. MONACO-AM

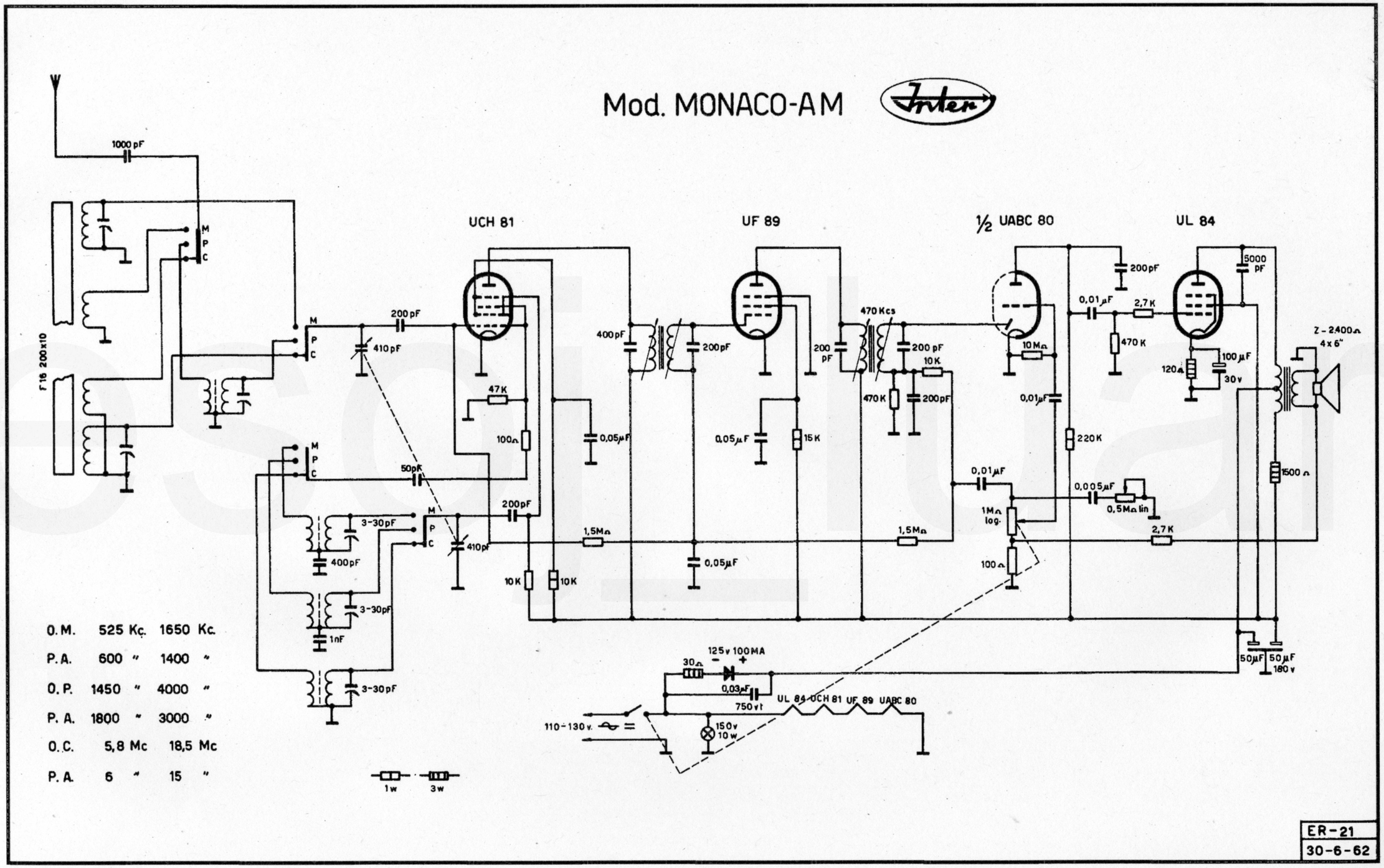

ER-21
30-6-62