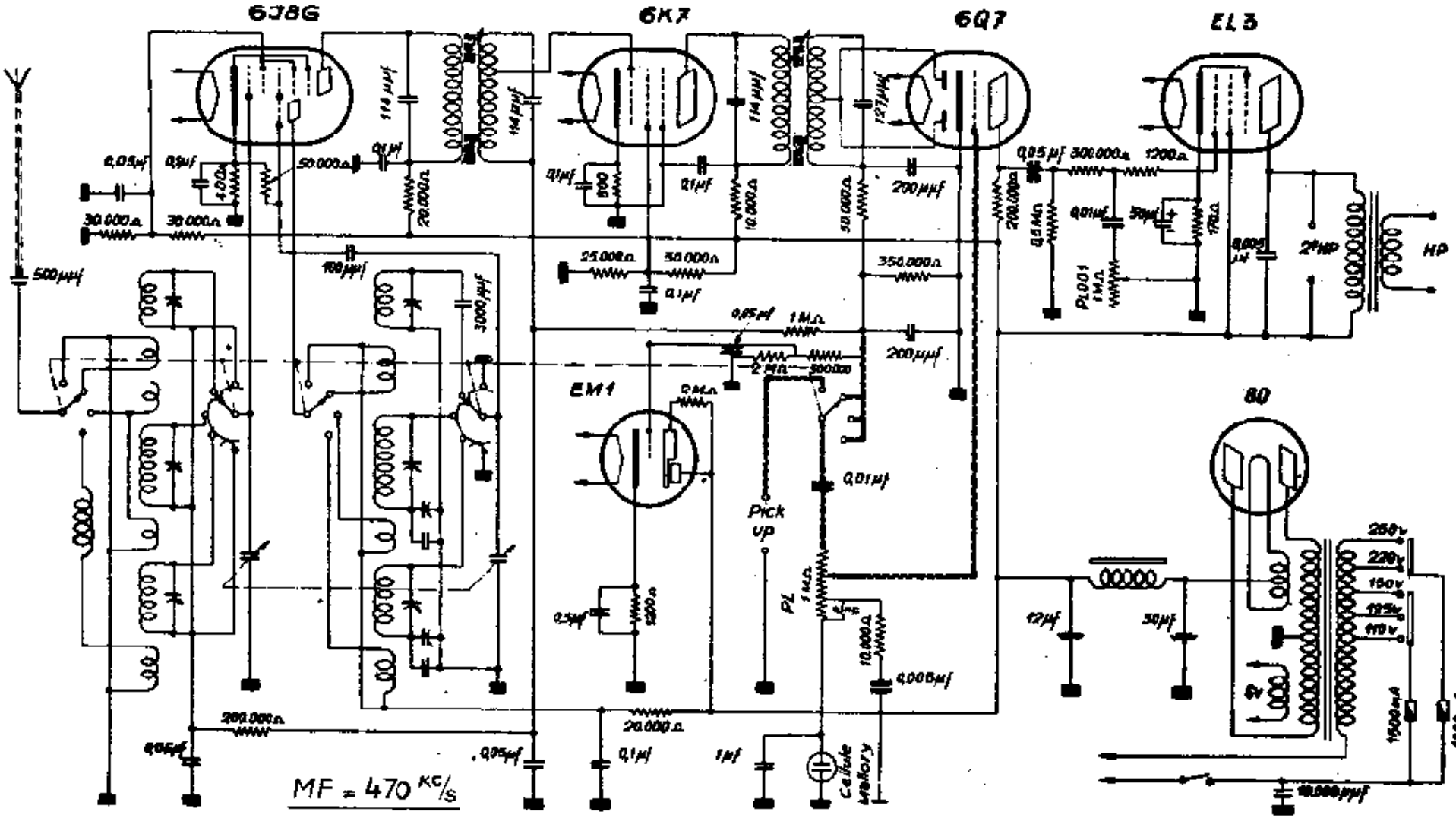


# Paillard 405