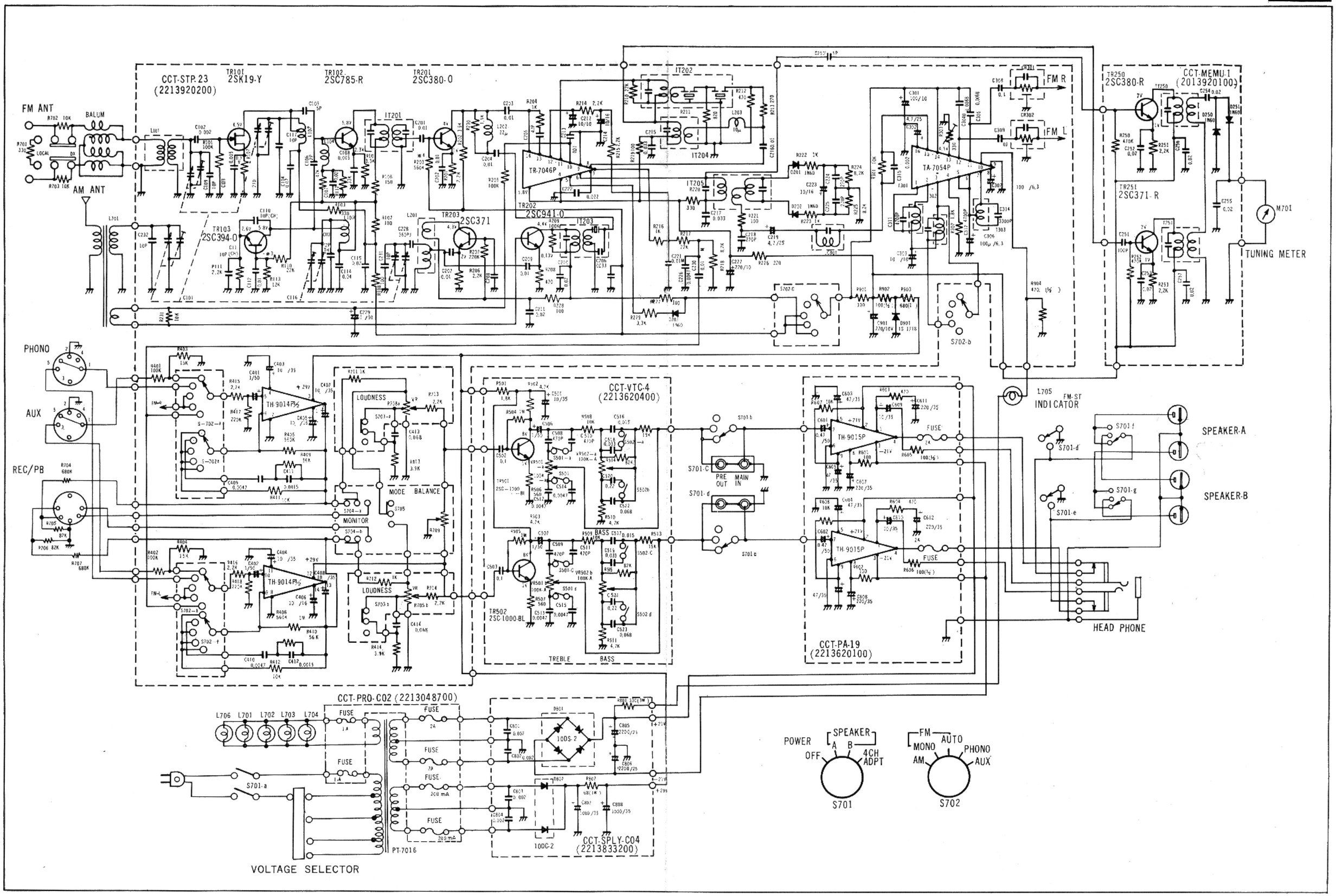Schematic Diagram for SA-400