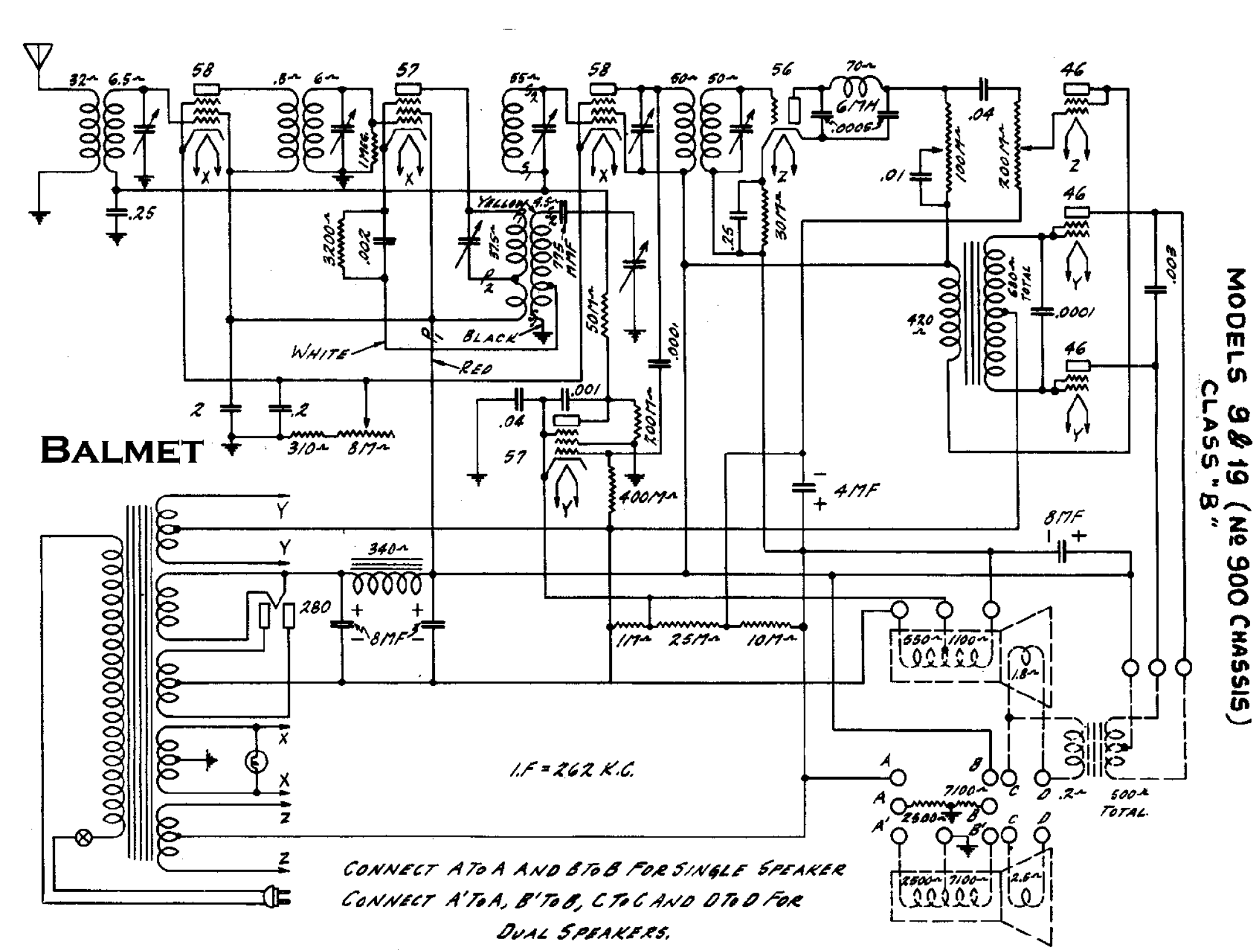
MODELS 9 & 19 (Nº 900 CHASSIS)
CLASS "B"
BALMET
I.F = 262 K.C.
CONNECT A TO A AND B TO B FOR SINGLE SPEAKER
CONNECT A' TO A, B' TO B, C TO C AND D TO D FOR
DUAL SPEAKERS.
WHITE
RED
BLACK
YELLOW
TOTAL
6 MH
.0005
4 MF
8 MF
1.F = 262 K.C.