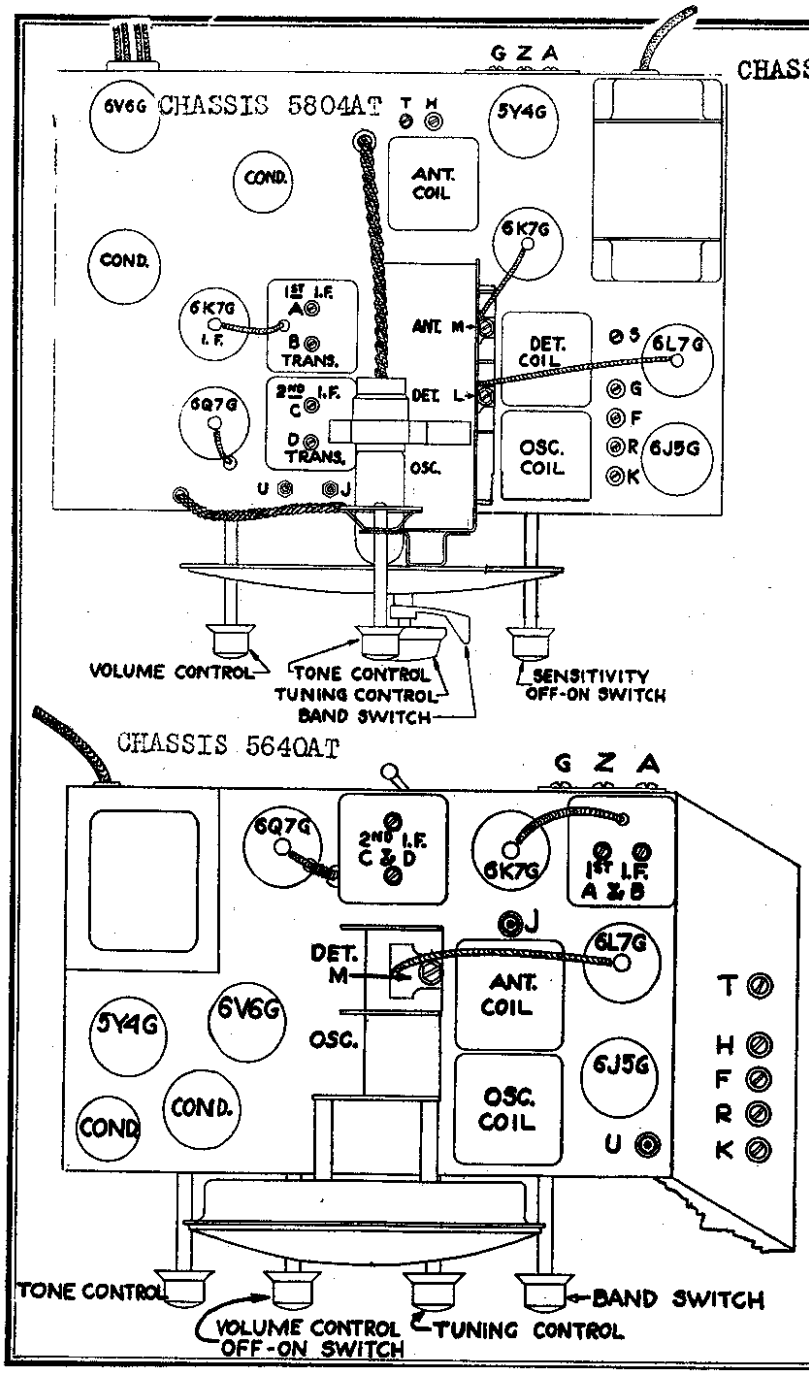

CHASSIS 5640, 5804A Secret Volume Governor

Where it is desired to limit the maximum volume of the receiver to a predetermined level such as for hospital use, use in public places, etc., this may be done as follows:

1. Tune the receiver carefully to a local station, and adjust the volume to the loudest desired setting.

2. Remove the knob by pulling directly away from the panel. and insert the short headless screw into the hole provided in the rear of the knob closest to the right side of the elongated cut-out around the volume control shaft.

3. It may be necessary to move the screw to the next hole in either direction before it is definitely determined what volume level is desired.

Alignment Procedure

CHASSIS 5640AT AND 5804AT

Operation	Sig. Gen. Connected to	Dummy	Gen. Freq.	Band Switch	Receiver Dial	Trimmer	Remarks:
1	1st Det. Grid	½ mfd	456	Med. Wave	550KC	ABCD	I F Alignment
2	Rec. Ant. Post	400 Ohms	18000	S. W.	18000	K	Set. Osc. To Scale
3	Rec. Ant. Post	400 Ohms	18000	S. W.	18000	L—*M	Rock Gang While Adj. for Max. Output
4	Rec. Ant. Post	200 mfd.	1500	Med. Wave	1500	F	Set. Osc. to Scale
5	" " "	200 "	1500	" "	1500	G—*H	Adjust for Max. Output
6	" " "	200 "	550	" "	550	J	Rock Gang while Adjusting for Maximum Output
7	" " "	200 "	1500	" "	1500	F-G-*H	Repeat 4 & 5
8	" " "	200 "	400	L. W.	400	R	Set. Osc. to Scale
9	" " "	200 "	400	L. W.	400	S—*T	Adjust for Max. Output
10	" " "	200 "	166.7	L. W.	166.7	U	Rock Gang While Adjusting for max. Output
11	" " "	200 "	400	L. W.	400	R-S-T	Repeat 8 & 9

*MODEL CHASSIS 5804A ONLY

©John F. Rider, Publisher

Courtesy Nostalgia Air

MODELS 8A232, 8A242, 8A244
8A262, Chassis 5804AT
Schematics

ZENITH RADIO CORP.

MODELS 8A129, 8A154, 8A147
8A157, Chassis 5802A

BAND	COLOR	KILOCYCLES	HEGACYCLES	METERS
A	Green	492-1640	.492- 1.640	610 -183
B	Yellow	1750-6040	1.75 - 6.04	171 - 49.6
C	Red	5520-19000	5.52 -19	54.4- 15.8
D	Blue	148-400		2025 -750

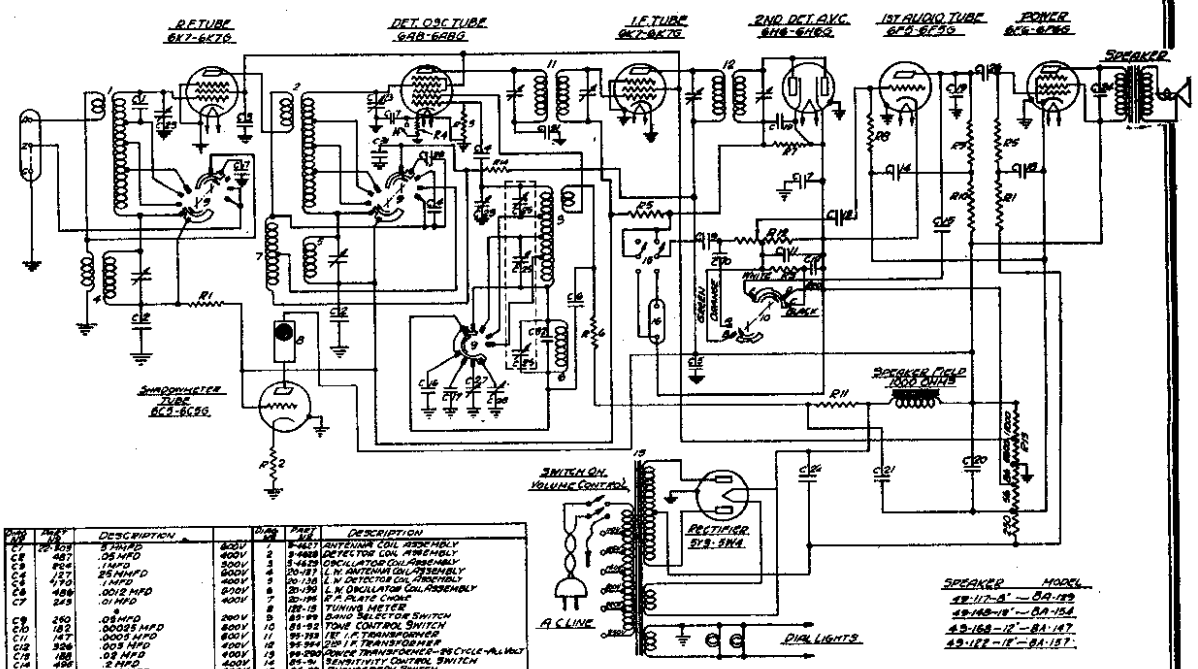

Diag. No.	Part No.	DESCRIPTION		Diag. No.	Part No.	DESCRIPTION	
C7	25-203	.5 MMFD	600V	1	5-4627	ANTENNA COIL ASSEMBLY	
C8	487	.05 MFD	400V	2	5-4628	DETECTOR COIL ASSEMBLY	
C9	824	.1 MFD	600V	3	5-4629	OSCILLATOR COIL ASSEMBLY	
C24	157	25 MMFD	600V	4	20-187	L.W. ANTENNA COIL ASSEMBLY	
C25	470	.1 MFD	400V	5	20-138	L.W. DETECTOR COIL ASSEMBLY	
C26	486	.0012 MFD	600V	6	20-130	L.W. OSCILLATOR COIL ASSEMBLY	
C7	249	.01 MFD	400V	7	20-196	L.F. PLATE CHOKE	
				8	126-15	TUNING METER	
C9	250	.05 MFD	200V	9	85-99	BAND SELECTOR SWITCH	
C10	182	.00005 MFD	600V	10	81-92	TONE CONTROL SWITCH	
C11	147	.0005 MFD	600V	11	99-193	1st I.F. TRANSFORMER	
C12	326	.005 MFD	400V	12	99-194	2nd I.F. TRANSFORMER	
C13	188	.02 MFD	400V	13	99-200	PICK TRANSFORMER-25 CYCLE-ALL VOLT	
C14	490	.1 MFD	400V	14	85-95	SENSITIVITY CONTROL SWITCH	
C15	492	.002 MFD	600V	15	85-99	PHONOGRAPH SWITCH	
C16	496	.005 MFD	600V	16	44-7	PHONOGRAPH JACK	
C17	494	.0015 MFD	600V				
C18	275	.05 MFD	200V				
C19	162	.0001 MFD	600V				
C20	26-191	8 MFD DRY ELEC. COND.	450V	R1	63-278	99 M OHMS	1/4W
C21		8 MFD DRY ELEC. COND.	450V	R2	308	700 OHMS	1/2W
C22	89-4	4 MFD DRY ELEC. COND.	450V	R3	480	694 OHMS	1/4W
C23	488	3 GANG VARIABLE COND.		R4	330	990 OHMS	1/4W
C24	209	.005 MFD	600V	R5	293	2.9 M OHMS	1/4W
C25	314	8-35 MMFD TRIMMER		R6	373	11 M OHMS	1/4W
C26	485	.02 MFD	600V	R7	481	400 M OHMS	1/4W
C27	205	200-250 MMFD PADDER		R8	429	2 MEGOHMS	1/4W
C28	318	100-250 MMFD PADDER		R9	258	4.9 M OHMS	1/4W
C29	320	250 MMFD	600V	R10	316	1.9 M OHMS	1/4W
				R11	315	19 M OHMS	1/4W
C31	212	.05 MFD	400V	R12	384	2 MEGOHM VOL. CONTROL & SWITCH	
C32	321	60 MMFD	600V	R13	315	CARBONA RESISTOR	
				R14	462	990 OHMS	1/4W

Consumption 85 watts.

Power Output 5 watts.

I.F. FREQUENCY 456 K.C.
8 TUBE SUPERHETERODYNE ~ 4 BAND
CHASSIS No 5802A

ZENITH RADIO CORPORATION
CHICAGO, ILLINOIS.

FOR OTHER DATA SEE INDEX

The total consumption is 70 watts. Power output 4.5 watts.

BAND	MEGACYCLES	KILOCYCLES	METERS
Short Wave	23 — 5.6	23,076 — 5660	13 — 53
Standard Broadcast	1.5 — .49	1538 — 499	195 — 601
Long Wave	.41 — .15	411 — 150	729 — 1987

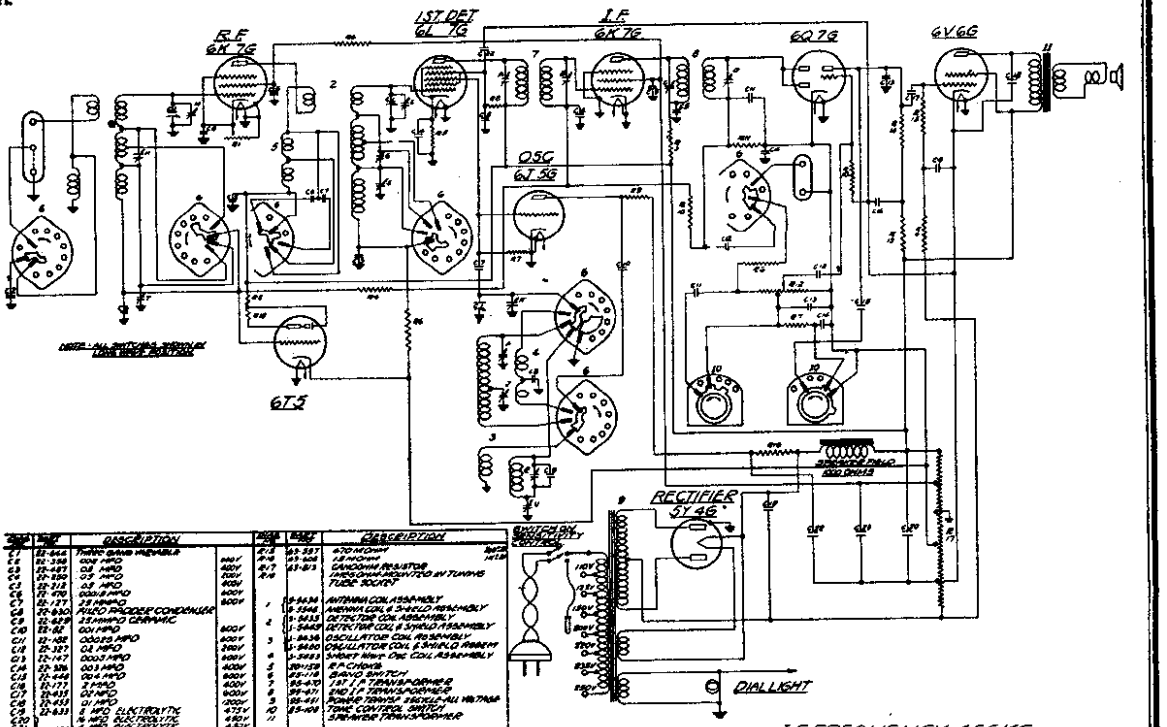

Diag. No.	Part No.	DESCRIPTION		Diag. No.	Part No.	DESCRIPTION	
C1	22-646	Trimmer Band Variable		R1	63-257	470 OHMS	
C2	22-388	.005 MFD	600V	R2	63-268	1.8 M OHM	1/2W
C3	22-487	.02 MFD	600V	R3	63-273	Carbona Resistor	
C4	22-330	.05 MFD	200V	R4		Resistor Mounted in Tubes	
C5	22-212	.02 MFD	400V			Tube Socket	
C6	22-490	.0002 MFD	400V				
C7	22-127	25 MMFD	600V	1	5-4634	Antenna Coil Assembly	
C8	22-630	Fixed Padder Condenser		2	5-4644	Antenna Coil & Shield Assembly	
C9	22-629	25 MMFD Ceramic		4	5-4633	Detector Coil Assembly	
C10	22-62	.001 MFD	600V		5-4632	Detector Coil & Shield Assembly	
C11	22-182	.0005 MFD	600V	3	5-4636	Oscillator Coil Assembly	
C12	22-327	.01 MFD	200V	4	5-4630	Oscillator Coil & Shield Assembly	
C13	22-147	.0005 MFD	600V		5-4643	Short Wave Osc. Coil Assembly	
C14	22-326	.005 MFD	400V	5	20-139	R.F. Choke	
C15	22-446	.01 MFD	600V	6	85-119	Band Switch	
C16	22-177	.1 MFD	400V	7	85-420	I.F. I.F. Transformer	
C17	22-433	.01 MFD	600V	8	99-471	2nd I.F. Transformer	
C18	22-433	.01 MFD	1200V	9	99-451	Power Trans. Pack-All Voltage	
C19	22-833	8 MFD Electrolytic	475V	10	85-469	Osc. Control Switch	
C20		16 MFD Electrolytic	450V	11		Speaker Transformer	
C21		4 MFD Electrolytic	450V				
C22	22-636	4 MFD Electrolytic	350V			Variable Trimmers	
C23		8 MFD Electrolytic	200V			1st I.F. Trans. Primary	
						1st I.F. Trans. Secondary	
R1	63-416	Sensitivity Control				2nd I.F. Trans. Primary	
R2	63-608	27 OHM	1/2W			2nd I.F. Trans. Secondary	
R3	63-605	1000 OHM	1/2W			Detector Broadcast (see note)	
R4	63-593	100 OHM	1/2W			Oscillator Broadcast (see note)	
R5	63-580	330 OHM	1/2W	1	22-328	Broadcast Padder	
R6	63-583	1000 OHM	1/2W	2	22-329	Short Wave Osc.	
R7	63-589	47 K OHM	1/2W			Short Wave Detector (Low Band)	
R8	63-608	12 M OHM	1/2W			Short Wave Det. (High Band)	
R9	63-630	10 M OHM	1/2W	3	22-410	Long Wave Osc.	
R10	63-276	1 M OHM	1/2W			Long Wave Detector	
R11	63-638	330 M OHM	1/2W			Long Wave Antenna (see note)	
R12	63-631	2 M OHM Vol. Control		4	22-329	Long Wave Padder	
R13	63-64	180 M OHM	1/2W			Note - Tracking, Pad. and Osc. Adjustments are made at 1000 K.C.	
R14	63-594	220 M OHM	1/2W				

MODEL	SPEAKER
6-A-232	49-218-8"
6-A-242	49-228-6"
6-A-244	49-227-10"
6-A-262	49-220-12"

I.F. FREQUENCY 456 KC.
8 TUBE SUPERHETERODYNE
3 BAND LONG WAVE
CHASSIS No 5804AT
ZENITH RADIO CORPORATION
CHICAGO, ILLINOIS

©John F. Rider, Publisher

Courtesy Nostalgia Air